PROGRESS ENERGY FLORIDA, INC.

CRYSTAL RIVER UNIT 3

DOCKET NUMBER 50-302 / LICENSE NUMBER DPR-72

ATTACHMENT B

OFF-SITE DOSE CALCULATION MANUAL
REVISION 27

CRYSTAL RIVER - UNIT #3

OFF-SITE DOSE CALCULATION MANUAL

APPROVED BY: Lee Hughes _____
Superintendent Environmental & Chemistry

DATE: 9/19/2005 ____

REVISION: _____27_____

APPROVED BY: Interpretation Contact

Peter Ezzell_____

INTRODUCTION

The Off-site Dose Calculation Manual (ODCM) is provide to support implementation of the Crystal River Unit 3 radiological effluent controls. The ODCM is divided into two parts. Part I contains the specifications for liquid and gaseous radiological effluents and the radiological environmental monitoring program which were relocated from the Technical Specifications in accordance with the provisions of Generic Letter 89-01 issued by the NRC in January, 1989. Part II of the ODCM contains the calculational methods to be used in determining the dose to members of the public resulting from routine radioactive effluents released from Crystal River Unit 3. Part II also contains the methodology used to determine effluent monitor alarm/trip setpoints which assure that releases of radioactive materials remain within specified concentrations.

The ODCM shall become effective after acceptance by the Plant Nuclear Safety Committee and approval by the Plant General Manager in accordance with Technical Specification Section 5.6.2.3. Changes to the ODCM shall be documented and records of reviews performed shall be retained. This documentation shall contain sufficient information to support the change (including analyses or evaluations), and a determination that the change will maintain the level of radioactive effluent control required by the regulations listed in Technical Specification and not adversely impact the accuracy or reliability of effluent, dose, or setpoint calculations.

Changes shall be submitted to the NRC in the form of a complete and legible copy of the entire ODCM as part of, or concurrent with, the Radioactive Effluent Release Report for the period of the report in which any change to the ODCM was made. Each change shall be identified by markings in the margin of the affected pages, clearly indicating the area of the page that was changed, and shall indicate the date (e.g. month/year) the change was implemented.

TABLE OF CONTENTS

PART I - SPECIFICATIONS

Section	Page
1.0 DEFINITIONS	1
1.1 Channel Calibration	1
1.2 Channel Check	1
1.3 Channel Functional Test	1
1.4 Degassing	1
1.5 Frequency	2
1.6 Liquid Radwaste Treatment System	2
1.7 Member of the Public	2
1.8 Mode	2
1.9 Offsite Dose Calculation Manual	3
1.10 Operable - Operability	3
1.11 Site Boundary	3
1.12 Source Check	3
1.13 Unrestricted Area	3
1.14 Ventilation Exhaust Treatment System	4
1.15 Waste Gas System	4
1.16 Purge - Purging	4
2.0 SPECIFICATIONS	5
2.1 Radioactive Effluent Monitoring Instrumentation	5
2.2 Radioactive Gaseous Effluent Monitoring Instrumentation	10
2.3 Liquid Radwaste Treatment System	17
2.4 Waste Gas System	18
2.5 Liquid Effluents Concentration	19
2.6 Liquid Effluents - Dose	23

PART I - SPECIFICATIONS (CON'T)

Section	Page
2.0 SPECIFICATIONS (Con't)	
2.7 Gaseous Effluents Dose Rate	24
2.8 Dose Noble Gases	28
2.9 Dose I-131, I-133, Tritium, and Radioactive Particulates	29
2.10 Total Dose	30
2.11 Radiological Environmental Monitoring	31
2.12 Land Use Census	38
2.13 Interlaboratory Comparison Program	39
2.14 Special Reports	40
2.15 Meteorological Instrumentation	41
2.16 Waste Gas Decay Tank - Explosive Gas Monitoring Instrumentation	44
2.17 Waste Gas Decay Tanks	46
2.18 Waste Gas Decay Tank - Explosive Gas Mixture	47
3.0 SPECIFICATION BASES	
3.1 Radioactive Effluent Monitoring Instrumentation Basis	48
3.2 Radioactive Gaseous Effluent Monitoring Instrumentation Basis	48
3.3 Liquid Radwaste Treatment System Basis	48
3.4 Waste Gas System Basis	49
3.5 Liquid Effluents Concentration Basis	49
3.6 Liquid Effluents Dose Basis	50
3.7 Gaseous Effluents Dose Rate Basis	50
3.8 Gaseous Effluents Dose Noble Gases Basis	51
3.9 Gaseous Effluents Dose I-131, I-133, Tritium, and Radioactive Particulates Basis	51

PART I - SPECIFICATIONS (CON'T)

Section	Page
3.0 SPECIFICATION BASES (Con't)	
3.10 Total Dose Basis	52
3.11 Radiological Environmental Monitoring Program Basis	53
3.12 Radiological Environmental Monitoring Program Land Use Census Basis	53
3.13 Radiological Environmental Monitoring Interlaboratory Comparison Program Basis	53
3.14 Explosive Gas Mixture	54
3.15 Waste Gas Decay Tanks	54
3.16 Waste Gas Decay Tank - Explosive Gas Monitoring	54
3.17 Meteorological Instrumentation	54

TABLE OF CONTENTS

PART II - METHODOLOGIES

Section		Page
1.0	RADIOACTIVE EFFLUENTS MONITOR SETPOINT SPECIFICATIONS	56
	1.1 Effluent Monitor Setpoint Specifications	58
	1.2 Nuclide Analyses	61
	1.3 Pre-Release Calculations	66
	1.4 Setpoint Calculations	72
2.0	RADIOACTIVE EFFLUENTS DOSE REDUCTION SPECIFICATIONS	85
	2.1 Waste Reduction Specifications	87
	2.2 Dose Projection Methodology	89
	2.3 Total Dose Specification	91
3.0	RADIOACTIVE EFFLUENTS SAMPLING SPECIFICATIONS	94
	3.1-1 Liquid Releases (Batch)	96
	3.1-2 Liquid Releases (Continuous)	96
	3.1-3 Gaseous Releases (Waste Gas Decay Tanks)	96
	3.1.4 Gaseous Releases (RB & AB)	96
	3.1-5 Reactor Bldg. with Personnel and Equipment Hatches Open	97
	3.1-6 Reactor Bldg. During Integrated Leak Rate Test	97
4.0	RADIOACTIVE EFFLUENTS DOSE CALCULATION SPECIFICATIONS	98
	4.1 Dose Specifications	100
	4.2 Nuclide Analyses	103
	4.3 Dose Calculations	108
	4.4 Dose Factors	112
5.0	ENVIRONMENTAL MONITORING	139
6.0	ADMINISTRATIVE CONTROLS	146

PART I

LIST OF TABLES

Table		Page
2-1	Radioactive Liquid Effluent Monitoring Instrumentation	6
2-2	Radioactive Liquid Effluent Monitoring Instrumentation Surveillance Requirements	8
2-3	Radioactive Gaseous Effluent Monitoring Instrumentation	11
2-4	Radioactive Gaseous Effluent Monitoring Instrumentation Surveillance Requirements	15
2-5	Radioactive Liquid Waste Sampling and Analysis Program	20
2-6	Radioactive Gaseous Waste Sampling and Analysis Program	25
2-7	Operational Radiological Environmental Monitoring Program	32
2-8	Reporting Levels for Radioactivity Concentrations in Environmental Samples	34
2-9	Maximum Values for the Lower Limits of Detection	35
2-10	Meteorological Monitoring Instrumentation	42
2-11	Meteorological Monitoring Instrumentation Surveillance Requirements	43
2-12	Waste Gas System Explosive Gas Monitoring Instrumentation	45

PART II

LIST OF TABLES

Table		Page
I	RADIOACTIVE EFFLUENTS MONITOR SETPOINTS	57
II	RADWASTE REDUCTION SYSTEM-DOSE PROJECTIONS	86
III	GASEOUS AND LIQUID EFFLUENT REPRESENTATIVE SAMPLING	95
IV	CUMULATIVE DOSE CALCULATIONS	99
4.4-1	Dose Factors for Exposure to a Semi-Infinite Cloud of Noble Gases	111
4.4-2	Inhalation Dose Factors - Infant	113
4.4-3	Inhalation Dose Factors - Child	114
4.4-4	Inhalation Dose Factors - Teen	115
4.4-5	Inhalation Dose Factors - Adult	116
4.4-6	Ingestion Dose Factors, Grass-Cow-Milk-Infant	119
4.4-7	Ingestion Dose Factors, Grass-Cow-Milk-Child	120
4.4-8	Ingestion Dose Factors, Grass-Cow-Milk-Teen	121
4.4-9	Ingestion Dose Factors, Grass-Cow-Meat-Adult	122
4.4-10	Ingestion Dose Factors, Grass-Cow-Meat-Child	125
4.4-11	Ingestion Dose Factors, Grass-Cow-Meat-Teen	126
4.4-12	Ingestion Dose Factors, Grass-Cow-Meat-Adult	127
4.4-13	Ingestion Dose Factors, Vegetation-Child	130
4.4-14	Ingestion Dose Factors, Vegetation-Teen	131
4.4-15	Ingestion Dose Factors, Vegetation-Adult	132

LIST OF TABLES
(Continued)

Table		Page
4.4-16	Dose Factors Ground Plane	134
4.4-17	Liquid Effluent Adult Ingestion Dose Factors	136
5.1-1	Environmental Monitoring Station Location	140
5.1-2	Ring TLDs (Inner Ring)	141
5.1-3	Ring TLDs (5 Mile Ring)	142

PART I

SPECIFICATIONS

1.0 DEFINITIONS

1.1 CHANNEL CALIBRATION

Refer to Technical Specifications.

1.2 CHANNEL CHECK

Refer to Technical Specifications.

1.3 CHANNEL FUNCTIONAL TEST

Refer to Technical Specifications.

1.4 DEGASSING

DEGASSING, for purposes of hydrogen and oxygen control, means venting of the make-up or reactor coolant systems to the WASTE GAS SYSTEM.

DEGASSING, for purposes of controlling the inventory of radioactive material, means venting of the pressurizer to the WASTE GAS SYSTEM.

DEGASSING does not include sampling.

1.5 FREQUENCY

NOTATION	FREQUENCY
S	At least once per 12 hours.
D	At least once per 24 hours.
W	At least once per 7 days.
M	At least once per 31 days.
Q	At least once per 92 days.
SA	At least once per 6 months.
R	At least once per 18 months.
S/U	Prior to each reactor startup.
P	Completed prior to each release.
N.A.	Not applicable.

NOTE: Surveillance frequencies are met if the surveillance is performed within 1.25 times the interval specified, as measured from the previous performance or as measured from the time a specified condition of the frequency is met. This is consistent with the convention of ITS 3.0.2.

1.6 LIQUID RADWASTE TREATMENT SYSTEM

The LIQUID RADWASTE TREATMENT SYSTEM shall be any available equipment (e.g., filters, evaporators) capable of reducing the quantity of radioactive material, in liquid effluents, prior to discharge.

1.7 MEMBER OF THE PUBLIC

MEMBER OF THE PUBLIC means an individual in a controlled or unrestricted area. However, an individual is not a member of the public during any period in which the individual receives an occupational dose.

1.8 MODE

Refer to Technical Specifications.

1.9 OFFSITE DOSE CALCULATION MANUAL (ODCM)

The OFFSITE DOSE CALCULATION MANUAL contains the methodology and parameters used in the calculation of offsite doses resulting from radioactive gaseous and liquid effluents, in the calculation of gaseous and liquid effluent monitoring Alarm Trip Setpoints, and in the conduct of the Environmental Radiological Monitoring Program. The ODCM also contains the Radioactive Effluent Controls and Radiological Environmental Monitoring Program and descriptions of the information that should be included in the Annual Radiological Environmental Operating and Radioactive Effluent Release Reports.

1.10 OPERABLE - OPERABILITY

Refer to Technical Specifications.

1.11 SITE BOUNDARY

The SITE BOUNDARY shall be that line beyond which the land is not owned, leased, or otherwise controlled by the licensee.

1.12 SOURCE CHECK

A SOURCE CHECK shall be the qualitative assessment of channel response when the channel sensor is exposed to a radioactive source.

1.13 UNRESTRICTED AREA

An UNRESTRICTED AREA shall be any area at or beyond the site boundary, access to which is not controlled by the licensee for purposes of protection of individuals from exposure to radiation and radioactive materials, or any area within the site boundary used for residential quarters or industrial, commercial, institutional, and/or recreational purposes.

1.14 VENTILATION EXHAUST TREATMENT SYSTEM

A VENTILATION EXHAUST TREATMENT SYSTEM is any system designed and installed to reduce gaseous radioiodine or radioactive material in particulate form in effluents by passing ventilation or vent exhaust gases through charcoal adsorbers and/or HEPA filters for the purpose of removing iodines or particulates from the gaseous exhaust stream prior to release to the environment (such a system is not considered to have any effect on noble gas effluents). Engineered Safety Feature (ESF) atmospheric cleanup systems are not considered to be VENTILATION EXHAUST TREATMENT SYSTEM components.

1.15 WASTE GAS SYSTEM

A WASTE GAS SYSTEM is any equipment (e.g., tanks, vessels, piping) capable of collecting primary coolant system offgases from the primary system and providing for delay or holdup for the purpose of reducing the total radioactivity prior to release to the environment.

1.16 PURGE - PURGING

PURGE or PURGING is the controlled process of discharging air or gas from a confinement to maintain temperature, pressure, humidity, concentration or other operating condition, in such a manner that replacement air or gas is required to purify the confinement.

2.0 SPECIFICATIONS

RADIOACTIVE LIQUID EFFLUENT MONITORING INSTRUMENTATION

2.1 The radioactive liquid effluent monitoring instrumentation channels shown in Table 2-1 shall be OPERABLE with their alarm/trip setpoints set to ensure that the limits of specification 2.5 are not exceeded.

APPLICABILITY: As shown on Table 2-1

ACTION:

a. With a radioactive liquid effluent monitoring instrumentation channel alarm/trip setpoint less conservative than required above, without delay suspend the release of radioactive liquid effluents monitored by the affected channel, or change the setpoint so that it is acceptably conservative, or declare the channel inoperable.

b. With one or more radioactive liquid effluent monitoring instrumentation channels inoperable, take the ACTION shown in Table 2-1. For the instrumentation covered by items 1 and 2 of the table, exert best efforts to return the inoperable instrument(s) to OPERABLE status within 30 days. If the affected instrument(s) cannot be returned to OPERABLE status within 30 days, provide information on the reasons for inoperability and lack of timely corrective action in the next Radioactive Effluent Release Report.

SURVEILLANCE REQUIREMENTS

2.1.1 Each radioactive liquid effluent monitoring instrumentation channel shall be demonstrated OPERABLE by performance of the CHANNEL CHECK, SOURCE CHECK, CHANNEL CALIBRATION and CHANNEL FUNCTIONAL TEST operations at the frequencies shown in Table 2-2.

TABLE 2-1

RADIOACTIVE LIQUID EFFLUENT AND PROCESS MONITORING INSTRUMENTATION

INSTRUMENT	MINIMUM CHANNELS OPERABLE	APPLICABLE MODES	ACTIONS
1. GROSS RADIOACTIVITY MONITORS PROVIDING ALARM AND AUTOMATIC TERMINATION OF RELEASE			
a. Auxiliary Building Liquid Radwaste Effluent Line (RM-L2)	1	ALL MODES	21
b. Secondary Drain Tank Liquid Effluent Line (RM-L7)	1	ALL MODES	22
2. FLOW RATE MEASUREMENT DEVICES			
a. Auxiliary Building Liquid Radwaste Effluent Line	1	ALL MODES	23
b. Secondary Drain Tank Liquid Effluent Line	1	ALL MODES	23
3. PROCESS MONITORS			
a. Nuclear Services Closed Cooling Water Monitor (RM-L3)	1	*	24
b. Decay Heat Closed Cooling Water Monitors (RM-L5 and RM-L6)	1	*	24

* During system operation

TABLE 2-1 (Continued)
TABLE NOTATION

ACTION 21 With less than the required number of OPERABLE channels, effluent releases via this pathway may continue, provided that prior to initiating a release:

a. At least two independent samples are analyzed in accordance with Specification 2.5.1, and

b. Two qualified persons independently verify the release rate calculations, and

c. Two qualified persons independently verify the discharge valve lineup.

Otherwise, suspend releases of radioactive materials via this pathway.

ACTION 22 With less than the required number of OPERABLE channels, effluent releases via this pathway may continue, provided that grab samples are collected and analyzed for gross radioactivity, at least once per 12 hours.

ACTION 23 With less than the required number of OPERABLE channels, effluent releases via this pathway may continue, provided that the flow rate is estimated at least once per 4 hours during actual releases.

ACTION 24 With no channels OPERABLE, plant operation may continue provided grab samples are collected and analyzed at least once per 24 hours.

TABLE 2-2

RADIOACTIVE LIQUID EFFLUENT AND PROCESS MONITORING INSTRUMENTATION SURVEILLANCE REQUIREMENTS

INSTRUMENT	CHANNEL CHECK	SOURCE CHECK	CHANNEL CALIBRATION	CHANNEL FUNCTIONAL TEST	MODES IN WHICH SURVEILLANCE REQUIRED
1. GROSS RADIOACTIVITY MONITORS PROVIDING ALARM AND AUTOMATIC TERMINATION OF RELEASE					
a. Auxiliary Building Liquid Radwaste Effluent Line (RM-L2)	D*	P	R (1)	Q	N.A.
b. Secondary Drain Tank Liquid Effluent Line (RM-L7)	D*	P	R (1)	Q	N.A.
2. FLOW RATE MEASUREMENT DEVICES					
a. Auxiliary Building Liquid Radwaste Effluent Line	D (2)	N.A.	R	N.A.	N.A.
b. Secondary Drain Tank Liquid Effluent Line	D (2)	N.A.	R	N.A.	N.A.
3. PROCESS MONITORS					
a. Nuclear Services Closed Cooling Water Monitor (RM-L3)	D	N.A.	R	Q	ALL MODES
b. Decay Heat Closed Cooling Water Monitors (RM-L5 and RM-L6)	D	N.A.	R	Q	ALL MODES

TABLE 2-2 (Continued)
TABLE NOTATION

* During periods of release.

(1) CHANNEL CALIBRATION shall be performed using:

a. One or more standards traceable to the National Bureau of Standards, or

b. Standards obtained from suppliers that participate in measurement assurance activities with the National Bureau of Standards, or

c. Standards related to previous calibrations performed using (a) or (b) above.

(2) CHANNEL CHECK shall consist of verifying indication of flow during periods of release. A CHANNEL CHECK shall be performed at least once per day on any day that continuous, periodic or batch releases are made.

RADIOACTIVE GASEOUS EFFLUENT MONITORING INSTRUMENTATION

2.2 The radioactive gaseous effluent monitoring instrumentation channels shown in Table 2-3 shall be OPERABLE with the effluent release isolation alarm/trip setpoints set to ensure that the limits of Specification 2.7 are not exceeded.

APPLICABILITY: As shown in Table 2-3

ACTION:

a. With a radioactive gaseous effluent monitoring instrumentation channel alarm/trip setpoint less conservative than required above, without delay suspend the release of radioactive gaseous effluents monitored by the affected channel where applicable, or change the setpoint so that it is acceptably conservative, or declare the channel inoperable.

b. With one or more radioactive gaseous effluent monitoring instrumentation channels inoperable, take the ACTION shown in Table 2-3. For the instruments covered by items 1, 2, and 3 of the table, exert best efforts to return the inoperable instrument(s) to OPERABLE status within 30 days. If the affected instruments cannot be returned to OPERABLE status within 30 days, provide information on reasons for inoperability and lack of timely corrective action in the next Radioactive Effluent Release Report.

SURVEILLANCE REQUIREMENTS

2.2.1 Each radioactive gaseous effluent monitoring instrumentation channel shall be demonstrated OPERABLE by performance of the CHANNEL CHECK, SOURCE CHECK, CHANNEL CALIBRATION and CHANNEL FUNCTIONAL TEST operations during the MODES and frequencies shown in Table 2-4.

TABLE 2-3

RADIOACTIVE GASEOUS EFFLUENT AND PROCESS MONITORING INSTRUMENTATION

	MINIMUM CHANNELS OPERABLE	APPLICABLE MODES	ACTION
1. Waste Gas Decay Tank Monitor (RM-A11)			
a. Noble Gas Activity Monitor*	1	ALL MODES	24
b. Effluent System Flow Rate Monitor	1	ALL MODES	26
2. Reactor Building Purge Exhaust Duct Monitor (RM-A1)			
a. Noble Gas Activity Monitor			
i. Operating Range*	1	**	27
ii. Mid Range#	1	**	29
iii. High Range#	1	**	29
b. Iodine Sampler	1	**	25
c. Particulate Sampler	1	**	25
d. Effluent System Flow Rate Monitor	1	**	26
e. Sampler Flow Rate Monitor	1	**	26
3. Auxiliary Building and Fuel Handling Area Exhaust Duct Monitor (RM-A2)			
a. Noble Gas Activity Monitor			
i. Operating Range *	1	ALL MODES	28
ii. Mid Range #	1	1, 2, 3 & 4	29
iii. High Range #	1	1, 2, 3 & 4	29
b. Iodine Sampler	1	ALL MODES	25
c. Particulate Sampler	1	ALL MODES	25
d. Effluent System Flow Rate Monitor	1	ALL MODES	26
e. Sampler Flow Rate Monitor	1	ALL MODES	26
4. Condenser Vacuum Pump Exhaust - Gaseous Activity Monitor (RM-A12)	1	1, 2, 3, 4	30

* Provides control room alarm and automatic termination of release.
** During periods of reactor building purge, except during fuel movement. During fuel movement surveillance requirements for RM-A1 (operating range) are specified by ITS 3.3.15. Fuel movement includes preparation for and demobilization from AI-504, Shutdown Condition 3.
# There is no isolation setpoint or release termination function for this monitor. Alarm setpoints are determined by the appropriate system procedures.

TABLE 2-3 (Continued)
TABLE NOTATION

ACTION 24 With less than the required number of OPERABLE channels, the contents of the Waste Gas Decay Tank may be released to the environment, provided that prior to initiating a release:

1. The Auxiliary Building & Fuel Handling Area Exhaust Duct Monitor (RM-A2) is OPERABLE with its setpoints set to ensure that the limits of Specification 2.7 are not exceeded. The setpoint shall be determined in accordance with the OFFSITE DOSE CALCULATION MANUAL, or

2. a. At least two independent samples of the tank's contents are analyzed in accordance with Table 2-6 and

   b. Two qualified persons independently verify the release rate calculations, and

   c. Two qualified persons independently verify the discharge valve lineup.

Otherwise, suspend releases of radioactive effluents via this pathway.

ACTION 25 RM-A1

With the affected sampler inoperable, operation of the RB purge may continue for 1 hour with no auxiliary sampling, provided that RB airborne levels are steady state or declining. If indicators of RB atmospheric activity, such as RM-A6, RCS leakage, or general area air samples, show an increase in RB activity while the sampler is inoperable, then immediately restore the affected sampler, or implement auxiliary sampling, or shut down the purge.

With the affected sampler inoperable, operation of the RB purge may continue for more than 1 hour provided that samples (reference Tables 2-6) are continuously taken (except for filter changes) with auxiliary sampling equipment.

Auxiliary sampling equipment includes general area RB air samples or RMA-15. Other sampling regimes are acceptable provided results are representative of plant effluents.

Note: Coordination of sampling during core alterations or fuel movement is required in order to comply with Technical Specifications.

TABLE 2-3 (Continued)
TABLE NOTATION

ACTION 25 RM-A2
(Continued)

With the affected channel inoperable, effluent releases may continue for 1 hour with no auxiliary sampling, provided that AB airborne levels are steady state or declining. If indicators of AB atmospheric activity, such as RM-A3, RM-A4, and RM-A8 show an increase in activity then restore the affected sampler, or implement auxiliary sampling, or shut down the release.

With the affected sampler inoperable, effluent releases may continue for more than 1 hour provided that samples (reference Table 2-6) are continuously taken (except for filter changes) with auxiliary sampling equipment.

Auxiliary sampling equipment includes 1) RM-A4 and RM-A8 used together 2) general area AB air samples, or 3) RMA-15. Other sampling regimes are acceptable provided results are representative of plant effluents.

ACTION 26 With the number of OPERABLE channels less than required, effluent releases via this pathway may continue, provided flow rate is estimated at least once per 4 hours.

ACTION 27 With the noble gas monitor (operating range) inoperable, operation of the RB purge may continue for 1 hour, provided that RB airborne levels are steady state or declining. If indicators of RB atmospheric activity such as RM-A6, RCS leakage, or general area air samples show an increase in RB activity while the monitor is inoperable, then immediately restore the noble gas monitor or shut down the purge.

Note: Coordination of sampling during core alterations or fuel movement is required in order to comply with Technical Specifications.

ACTION 28 With the number of OPERABLE channels less than required, releases via this pathway may continue, provided grab samples are collected at least once per 12 hours and analyzed within 24 hours, and either the requirements of ACTION 24 Part 2 are met or Radiation Monitor RM-A11 is OPERABLE prior to releasing the contents of the Waste Gas Decay Tanks.

* Gas grabs may be taken from RM-A4 and RM-A8.

TABLE 2-3 (Continued)
TABLE NOTATION

ACTION 29 With the number of OPERABLE channels less than required by the Minimum Channels OPERABLE requirements, initiate the preplanned alternate method of monitoring the appropriate parameter(s), within 72 hours, and:

1) Either restore the inoperable Channel(s) to OPERABLE status within 7 days of the event, or

2) Prepare and submit a Special Report to the Commission pursuant to Specification 2.14 within the next 30 days outlining the action taken, the cause of the inoperability and the plans and schedule for restoring the system to OPERABLE status.

NOTE: Action Statement 2.2a not applicable.

NOTE: The PASS AIMS system may be used as a preplanned alternate method for either RM-A1 or RM-A2 Mid or High Range inoperability. When sampling Auxiliary Building or Reactor Building ventilation, AIMS requires a flow path via RM-A1 or RM-A2 and the motive force from RMP-A1 or RMP-A2. When RM-A1 or RM-A2 is made inoperable for sampling or calibration activities, the flow path may be considered available as a preplanned alternative method.

ACTION 30 With no channels OPERABLE, plant operation may continue provided grab samples are collected and analyzed for noble gases at least once per 24 hours.

TABLE 2-4

RADIOACTIVE GASEOUS EFFLUENT AND PROCESS MONITORING INSTRUMENTATION SURVEILLANCE REQUIREMENTS

INSTRUMENT	CHANNEL CHECK	SOURCE CHECK	CHANNEL CALIBRATION	CHANNEL FUNCTIONAL TEST	MODES IN WHICH SURVEILLANCE REQUIRED
1. WASTE GAS DECAY TANK MONITOR (RM-A11)					
a. Noble Gas Activity Monitor	P	P	R(1)	Q	ALL MODES
b. Effluent System Flow Rate Monitor	P	N.A.	R	Q	ALL MODES
2. REACTOR BUILDING PURGE EXHAUST DUCT MONITOR (RM-A1)					
a. Noble Gas Activity Monitor					
I. Operating Range	D	P	R(1)	Q	#
ii. Mid Range	W	M	R(1)	Q	#
iii. High Range	W	M	R(1)	Q	#
b. Iodine Sampler	W	N.A.	N.A.	N.A.	#
c. Particulate Sampler	W	N.A.	N.A.	N.A.	#
d. Effluent System Flow Rate Monitor	D	N.A.	R	Q	#
e. Sampler Flow Rate Monitor	D	N.A.	R	Q	#
3. AUXILIARY BUILDING & FUEL HANDLING AREA EXHAUST DUCT MONITOR (RM-A2)					
a. Noble Gas Activity Monitor					
I. Operating Range	D	N.A.	R(1)	Q	ALL MODES
ii. Mid Range	W	M	R(1)	Q	1, 2, 3, 4
iii. High Range	W	M	R(1)	Q	1, 2, 3, 4
b. Iodine Sampler	W	N.A.	N.A.	N.A.	ALL MODES
c. Particulate Sampler	W	N.A.	N.A.	N.A.	ALL MODES
d. Effluent System Flow Rate Monitor	D	N.A.	R	Q	ALL MODES
e. Sampler Flow Rate Monitor	D	N.A.	R	Q	ALL MODES
4. Condenser Vacuum Pump Exhaust - Gaseous Activity Monitor (RM-A12)	D	N.A.	R	Q	1, 2, 3, 4

TABLE 2-4 (Continued)

During periods of Reactor Building Purge, except during fuel movement. During fuel movement surveillance requirements for RM-A1 (operating range) are specified by ITS 3.3.15. Fuel movement includes preparation for and demobilization from AI-504, Shutdown Condition 3.

(1) CHANNEL CALIBRATION shall be performed using:

a. One or more standards traceable to the National Bureau of Standards, or

b. Standards obtained from suppliers that participate in measurement assurance activities with the National Bureau of Standards, or

c. Standards related to previous calibrations using (a) or (b) above.

LIQUID RADWASTE TREATMENT SYSTEM

2.3 The LIQUID RADWASTE TREATMENT SYSTEM shall be used, as required, to reduce radioactive materials in liquid wastes prior to their discharge, when projected monthly doses due to liquid effluents discharged to UNRESTRICTED AREAS would exceed the following values:

a. 0.06 mrem whole body;

b. 0.2 mrem to any organ

APPLICABILITY: At all times.

ACTION: a. When radioactive liquid waste, in excess of the above limits, is discharged without prior treatment, prepare and submit to the Commission within 30 days, a Special Report pursuant to Specification 2.14, which includes the following information:

1. Identification of inoperable equipment and the reasons for inoperability.

2. Actions taken to restore the inoperable equipment to OPERABLE status.

3. Actions taken to prevent recurrence.

SURVEILLANCE REQUIREMENTS

2.3.1 Doses due to liquid releases shall be projected at least once per 31 days.

WASTE GAS SYSTEM

2.4 The WASTE GAS SYSTEM shall be used, as required, to reduce the radioactivity of materials in gaseous waste prior to discharge, when projected monthly air doses due to releases of gaseous effluents from the site to areas at or beyond the SITE BOUNDARY would exceed:

1) 0.2 mrad gamma;
2) 0.4 mrad beta; and

The VENTILATION EXHAUST TREATMENT SYSTEM shall be used, as required, to reduce the quantity of radioactive materials in gaseous waste prior to discharge, when projected monthly air doses due to release of gaseous effluents from the site to areas at or beyond the SITE BOUNDARY would exceed:

1) 0.3 mrem to any organ

APPLICABILITY: At all times.

ACTION:

a. When the WASTE GAS SYSTEM and/or VENTILATION EXHAUST TREATMENT SYSTEM are not used and gaseous waste in excess of the above limits is discharged without prior treatment, prepare and submit to the Commission, within 30 days a Special Report, pursuant to Specification 2.14, which includes:

1) Identification of the inoperable equipment and the reason(s) for inoperability.

2) Actions taken to restore the inoperable equipment to OPERABLE status.

3) Actions taken to prevent recurrence.

SURVEILLANCE REQUIREMENTS

2.4.1 Doses due to gaseous releases from the site shall be projected at least once per 31 days.

LIQUID EFFLUENTS CONCENTRATION

2.5 The concentration of radioactive material released to UNRESTRICTED AREAS shall be less than or equal to 10 times the concentrations specified in 10 CFR Part 20, Appendix B, Table II, Column 2 for radionuclides other than dissolved or entrained noble gases. For Xe-133, the concentration shall be $\leq 1 \times 10^{-3}$ microcuries/ml. For all other dissolved or entrained noble gases, the concentration shall be less than or equal to 2×10^{-4} microcuries/ml total activity.

APPLICABILITY: At all times.

ACTION:

a. With the concentration of radioactive materials released to UNRESTRICTED AREAS exceeding the above limits, without delay restore the concentration of radioactive materials being released to UNRESTRICTED AREAS to within the above limits. If the concentration of radioactive materials being released in excess of the above limit is related to a plant-operating characteristic, appropriate corrective measures (e.g., power reduction, plant shutdown) shall be taken to restore the concentration of radioactive materials being released to UNRESTRICTED AREAS to within the above limits.

SURVEILLANCE REQUIREMENTS

2.5.1 Radioactive liquid wastes shall be sampled and analyzed in accordance with the sampling and analysis program of Table 2-5.

2.5.2 The results of the radioactivity analyses shall be used to assure the concentrations of radioactive material released from the site are maintained within the limits of Specification 2.5.

TABLE 2-5

RADIOACTIVE LIQUID WASTE SAMPLING AND ANALYSIS PROGRAM

Liquid Release Type	Sampling Frequency	Minimum Analysis Frequency	Type of Activity Analysis	Lower Limit of Detection (LLD) (μCi/ml)[a]
A. Batch Waste Release Tanks[d] 1. Evaporator Condensate Storage Tanks (2) 2. Laundry & Shower Sump Tanks (2) 3. Secondary Drain Tank	P Each Batch	P Each Batch	Principal Gamma Emitters[f]	$5x10^{-7}$
			I-131	$1x10^{-6}$
	P One Batch/M	M	Dissolved and Entrained Gases (Gamma Emitters	$1x10^{-5}$
	P Each Batch	M Composite[b]	H-3	$1x10^{-5}$
			Gross Alpha	$1x10^{-7}$
	P Each Batch	Q Composite[b]	Sr-89, Sr-90	$5x10^{-8}$
			Fe-55	$1x10^{-6}$
B. Continuous Releases[e] 1. Condensate System	Continuous[c]	W Composite[c]	Principal Gamma Emitters[f]	$5x10^{-7}$
			I-131	$1x10^{-6}$
	M Grab Sample	M	Dissolved and Entrained Gases (Gamma Emitters)	$1x10^{-5}$
	Continuous[c]	M Composite[c]	H-3	$1x10^{-5}$
			Gross Alpha	$1x10^{-7}$
	Continuous[c]	Q Composite[c]	Sr-89, SR-90	$5x10^{-8}$
			Fe-55	$1x10^{-6}$

TABLE 2-5 (Continued)

TABLE NOTATION

a. The LLD* is the smallest concentration of radioactive material in a sample that will be detected with 95% probability with 5% probability of falsely concluding that a blank observation represents a "real" signal.

For a particular measurement system (which may include radiochemical separation):

$$LLD = 4.66s_b/(2.22x10^6EVYe^{-\lambda\Delta t})$$

Where:

LLD is the lower limit of detection as defined above (as microcurie per unit mass or volume),

s_b is the standard deviation of the background counting rate or of the counting rate of a blank sample as appropriate (as counts per minute),

E is the counting efficiency (as counts per disintegration),

V is the sample size (in units of mass or volume),

$2.22x10^6$ is the number of disintegrations per minute per microcurie,

Y is the fractional radiochemical yield (when applicable),

λ is the radioactive decay constant for the particular radionuclide, and

Δt is the elapsed time between midpoint of sample collection and time of counting (for plant effluents, not environmental samples).

Typical values of E, V, Y, and Δt shall be used in the calculation.

* The LLD is defined as an a priori (before the fact) limit representing the capability of a measurement system and not as an a posteriori (after the fact) limit for a particular measurement.

TABLE 2-5 (Continued)

TABLE NOTATION

b. A composite sample is one in which the quantity of liquid sampled is proportional to the quantity of liquid waste discharged and in which the method of sampling employed results in a specimen which is representative of the liquids released.

c. To be representative of the quantities and concentrations of radioactive materials in liquid effluents, samples shall be collected continuously in proportion to the rate of flow of the effluent stream. Prior to analyses, all samples taken for the composite shall be thoroughly mixed in order for the composite sample to be representative of the effluent release.

d. A batch release is the discharge of liquid wastes of a discrete volume. Prior to sampling for analyses, each batch shall be isolated, and then thoroughly mixed to assure representative sampling.

e. A continuous release is the discharge of liquid wastes of a nondiscrete volume; e.g., from a volume or system that has an input flow during the continuous release.

f. The principal gamma emitters for which the LLD specification applies exclusively are the following radionuclides: Mn-54, Fe-59, Co-58, Co-60, Zn-65, Mo-99, Cs-134, Cs-137, Ce-141, and Ce-144. This list does not mean that only these nuclides are to be detected and reported. Other peaks, which are measurable and identifiable, together with the above nuclides, shall also be identified and reported. Nuclides which are below the LLD for the analyses shall be reported as "less than" the nuclide's LLD, and shall not be reported as being present at the LLD level for that nuclide. The "less than" values shall not be used in the required dose calculations.

LIQUID EFFLUENTS - DOSE

2.6 The dose or dose commitment to a MEMBER OF THE PUBLIC from radioactive materials in liquid effluents released to UNRESTRICTED AREAS shall be limited as follows:

a. During any calendar quarter to less than or equal to 1.5 mrem to the total body and less than or equal to 5 mrem to any organ.

b. During any calendar year to less than or equal to 3 mrem to the total body and to less than or equal to 10 mrem to any organ.

APPLICABILITY: At all times.

ACTION:

a. With the calculated dose from the release of radioactive materials in liquid effluents exceeding any of the above limits, prepare and submit to the Commission, within 30 days, a Special Report pursuant to Specification 2.14, which includes:

1. Identification of the cause for exceeding the limit(s);

2. Corrective action taken to reduce the release of radioactive materials in liquid effluents during the remainder of the current calendar quarter an during the remainder of the current calendar year so that the dose or dose commitment to a MEMBER OF THE PUBLIC from this source is less than or equal to 3 mrem total body and less than or equal to 10 mrem to any organ during the calendar year.

SURVEILLANCE REQUIREMENTS

2.6.1 DOSE CALCULATIONS. Cumulative dose contributions from liquid effluents shall be determined at least once per 31 days.

GASEOUS EFFLUENTS - DOSE RATE

2.7 The dose rate at or beyond the SITE BOUNDARY, due to radioactive materials released in gaseous effluents, shall be limited as follows:

a. Noble gases: less than or equal to 500 mrem/year total body and less than or equal to 3000 mrem/year to the skin.

b. I-131, I-133, Tritium, and radioactive particulates with half-lives of greater than 8 days: less than or equal to 1500 mrem/year to any organ.

APPLICABILITY: At all times

ACTION:

a. With dose rate (s) exceeding the above limits, without delay decrease the dose rate to within the above limit(s). If the dose rate at or beyond the SITE BOUNDARY due to radioactive materials in gaseous effluents in excess of the above limits is related to a plant-operating characteristic, appropriate corrective measures (e.g., power reduction, plant shutdown) shall be taken to decrease the dose rate to within the above limits.

SURVEILLANCE REQUIREMENTS

2.7.1 The dose rate due to noble gases in gaseous effluents shall be determined to be within the above limits.

2.7.2 The dose rate due to radioactive materials specified above, other than noble gases, in gaseous effluents shall be determined to be within the above limits by obtaining representative samples and performing analyses in accordance with Table 2-6.

TABLE 2-6

RADIOACTIVE GASEOUS WASTE SAMPLING AND ANALYSIS PROGRAM

Gaseous Release Type	Sampling Frequency	Minimum Analysis Frequency	Type of Activity Analysis	Lower Limit of Detection (LLD) (μCi/ml)[a]
A. Waste Gas Decay Tank	P Each Tank Grab Sample	P Each Tank	Principal Gamma Emitters[f]	$1x10^{-4}$
B. Reactor Building Purge Exhaust Duct Monitor (RM-A1)	P Each Purge[c] Grab Sample	P Each Purge	Principal Gamma Emitters[b,f]	$1x10^{-4}$
			H-3	$1x10^{-6}$
C. Auxiliary Building and Fuel Handling Area Exhaust Duct Monitor (RM-A2)	M[c] Grab Sample	M	Principal Gamma Emitters[b,f]	$1x10^{-4}$
			H-3	$1x10^{-6}$
D. All Release Types as Listed in A, B, C above	Continuous[e]	W[d] Charcoal Sample	I-131	$1X10^{-12}$
	Continuous[e]	W[d] Particulate Sample	Principal Gamma Emitters[f] (I-131, Others)	$1x10^{-11}$
	Continuous[e]	M Composite Particulate Sample	Gross Alpha	$1x10^{-11}$
	Continuous[e]	Q Composite Particulate Sample	Sr-89, Sr-90	$1x10^{-11}$
	Continuous[e]	Noble Gas Monitor	Noble Gases Gross Beta & Gamma	$1x10^{-6}$

TABLE 2-6 (Continued)

TABLE NOTATION

a. The LLD* is the smallest concentration of radioactive material in a sample that will be detected with 95% probability with 5% probability of falsely concluding that a blank observation represents a "real" signal.

For a particular measurement system (which may include radiochemical separation):

$$LLD = 4.66s_b/(2.22x10^6EVYe^{-\lambda\Delta t})$$

Where:

LLD is the lower limit of detection as defined above (as microcurie per unit mass or volume),

s_b is the standard deviation of the background counting rate or of the counting rate of a blank sample as appropriate (as counts per minute),

E is the counting efficiency (as counts per disintegration),

V is the sample size (in units of mass or volume),

$2.22x10^6$ is the number of disintegrations per minute per microcurie,

Y is the fractional radiochemical yield (when applicable),

λ is the radioactive decay constant for the particular radionuclide, and

Δt is the elapsed time between midpoint of sample collection and time of counting (for plant effluents, not environmental samples).

Typical values of E, V, Y, and Δt shall be used in the calculation.

* The LLD is defined as an a priori (before the fact) limit representing the capability of a measurement system and not as an a posteriori (after the fact) limit for a particular measurement.

TABLE 2-6 (Continued)

TABLE NOTATION

b. Analyses shall be performed when there is a sustained increase in the noble gas monitor count rate. As sustained increase is one in which the count rate stays above the monitor warning sepoint for at least one hour. Sampling shall be done within 2 hours of warning alarm actuation.

   If the associated noble gas monitor (RM-A1 or RM-A2) is out of service during a release, then analyses shall be performed between 2 and 6 hours following shutdown, startup, or a change in power level exceeding 15% rated thermal power within one hour.

c. Tritium grab samples shall be taken between 12 and 24 hours after flooding the refueling canal and at least once per 7 days thereafter while the refueling canal is flooded.

d. Samples shall be changed at least once per 7 days and analyses shall be completed within 48 hours after changing (or after removal from sampler). Sampling and analyses shall be performed at least once per 24 hours for at least 7 days following each shutdown, startup or change in power level exceeding 15% of RATED THERMAL POWER within one hour, unless the Iodine Monitoring Channels in Radiation Monitors RM-A1 and RM-A2 show that the Radionuclide concentration in the Auxiliary Building and Fuel Handling Area or the Reactor Building Purge Exhaust Ducts will lead to a release which is less than the 10 CFR 20, Appendix B, Table II, Column I limits, at or beyond the SITE BOUNDARY.

e. The ratio of the sample flow rate to the sampled stream flow rate shall be known for the time period covered by each dose or dose rate calculation made in accordance with the Specifications 2.7, 2.8, and 2.9.

f. The principal gamma emitters for which the LLD specification applies exclusively are the following radionuclides: Kr-87, Kr-88, Xe-133, Xe-133m, Xe-135, and Xe-138 for gaseous emissions and Mn-54, Fe-59, Co-58, Co-60, Zn-65, Mo-99, Cs-134, Cs-137, Ce-141 and Ce-144 for particulate emissions. This list does not mean that only these nuclides are to be detected and reported. Other peaks, which are measurable and identifiable, together with the above nuclides, shall also be identified and reported. Nuclides which are below the LLD for the analyses shall be reported as "less than" the nuclide's LLD and shall not be reported as being present at the LLD level for that nuclide. The "less than" values shall not be used in the required dose calculations.

DOSE-NOBLE GASES

2.8 The air dose at or beyond the SITE BOUNDARY, due to radioactive noble gases released in gaseous effluents shall be limited to:

a. During any calendar quarter: less than or equal to 5 mrad gamma and less than or equal to 10 mrad beta radiation, and

b. During any calendar year: less than or equal to 10 mrad gamma and less than or equal to 20 mrad beta radiation.

APPLICABILITY: At all times.

ACTION:

a. With the calculated air dose from radioactive noble gases in gaseous effluents exceeding any of the above limits, prepare and submit to the Commission, within 30 days, a Special Report, pursuant to Specification 2.14, which includes:

1) Identification of the cause for exceeding the limit(s).

2) Corrective action taken to reduce the release of radioactive noble gases in gases effluents during the remainder of the current calendar quarter and during the remainder of the current calendar year so that the average dose during the calendar year is less than or equal to 10 mrad gamma and 20 mrad beta radiation.

SURVEILLANCE REQUIREMENTS

2.8.1 DOSE CALCULATIONS: Cumulative dose contributions for the current calendar quarter and current calendar year shall be determined at least once per 31 days.

DOSE - I-131, I-133, TRITIUM, AND RADIOACTIVE PARTICULATES

2.9 The dose to a MEMBER OF THE PUBLIC from I-131, I-133, Tritium, and radioactive particulates with half-lives greater than 8 days in gaseous effluents released from the site to areas at or beyond the SITE BOUNDARY shall be limited as follows:

a. During any calendar quarter: less than or equal to 7.5 mrem to any organ, and

b. During any calendar year: less than or equal to 15 mrem to any organ.

APPLICABILITY: At all times.

ACTION:

a. With the calculated dose from the release of I-131, I-133, Tritium, and radioactive particulates with greater than 8 day half-lives, in gaseous effluents, exceeding any of the above limits, prepare and submit to the Commission, within 30 days, a Special Report, pursuant to Specification 2.14, which includes:

1) Identification of the cause for exceeding the limits(s);

2) Corrective action to reduce those releases during the remainder of the current calendar quarter and the remainder of the current calendar year so that the average dose to any organ is less than or equal to 15 mrem.

SURVEILLANCE REQUIREMENTS

2.9.1 DOSE CALCULATIONS: Cumulative dose calculations for the current calendar quarter and current calendar year shall be determined at least once per 31 days.

TOTAL DOSE

2.10 The calendar year dose or dose commitment to any MEMBER OF THE PUBLIC, due to releases of radioactivity and radiation, from uranium fuel cycle sources shall be limited to less than or equal to 25 mrems to the total body or any organ (except the thyroid, which shall be limited to less than or equal to 75 mrems).

APPLICABILITY: At all times.

ACTION:

a. With the calculated doses from the release of radioactive materials in liquid or gaseous effluents exceeding twice the limits of Specification 2.6a, 2.6b, 2.8a, 2.8b, 2.9a, or 2.9b, calculations should be made, which include direct radiation contributions from the reactor, to determine whether the above limits of Specification 2.10 have been exceeded. If such is the case, prepare and submit to the Commission within 30 days, pursuant to Specification 2.14, a Special Report that defines the corrective action to be taken to reduce subsequent releases to prevent recurrence of exceeding the above limits and includes the schedule for achieving conformance with the above limits. This Special Report, as defined in 10 CFR Part 20.2203, shall include an analysis that estimates the radiation exposure (dose) to a MEMBER OF THE PUBLIC from uranium fuel cycle sources, including all effluent pathways and direct radiation, for the calendar year that includes the release(s) covered by this report. It shall also describe levels of radiation and concentrations of radioactive material involved, and the cause of the exposure levels or concentrations. If the estimated dose(s) exceeds the above limits, and if the release condition resulting in violation of 40 CFR Part 190 has not already been corrected, the Special Report shall include a request for a variance in accordance with the provisions of 40 CFR Part 190. Submittal of the report is considered a timely request, and a variance is granted until staff action on the request is complete.

SURVEILLANCE REQUIREMENTS

2.10.1 DOSE CALCULATIONS - Cumulative dose contributions from liquid and gaseous effluents shall be determined in accordance with Specifications 2.6.1, 2.8.1, and 2.9.1.

RADIOLOGICAL ENVIRONMENTAL MONITORING

2.11 The radiological environmental monitoring program shall be conducted as specified in Table 2-7.

APPLICABILITY: At all times.

ACTION:

a. With the radiological environmental monitoring program not being conducted as specified in Table 2-7, prepare and submit to the Commission, in the Annual Radiological Environmental Operating Report, a description of the reasons for not conducting the program as required and the plans for preventing a recurrence.

b. With the level of radioactivity, resulting from plant effluents, in an environmental sampling medium exceeding the reporting levels of Table 2-8 when averaged over any calendar quarter, prepare and submit to the Commission, within 30 days of obtaining analytical results from the affected sampling period, a Special Report pursuant to Specification 2.14, which identifies the cause(s) for exceeding the limit(s) and defines corrective actions to be taken to reduce radioactive effluents so that the potential annual dose to a MEMBER OF THE PUBLIC is less than the calendar year limits of Specifications 2.7, 2.8, and 2.9. When more than one of the radionuclides in Table 2-8 are detected in the radionuclides in Table 2-8 are detected in the sampling medium, this report shall be submitted if:

$$\frac{\text{concentration (1)}}{\text{limit level (1)}} + \frac{\text{concentration (2)}}{\text{limit level (2)}} + \ldots \geq 1.0$$

When radionuclides other than those in Table 2-8 are detected and are the result of plant effluents, this report shall be submitted if the potential annual dose to a MEMBER OF THE PUBLIC is greater than or equal to the calendar year limits of Specifications 2.7, 2.8, and 2.9. This report is not required if the measured level of radioactivity was not the result of plant effluents; however, in such an event, the condition shall be reported and described in the Annual Radiological Environmental Operating Report.

c. With milk or fresh leafy vegetation samples unavailable from one or more of the sample locations required by Table 2-7, identify the cause of the unavailability of samples and identify locations for obtaining replacement samples in the next Annual Radiological Environmental Operating Report. The locations from which samples were unavailable may then be deleted from those required by Table 2-7, provided the locations from which the replacement samples were obtained are added to the environmental monitoring program as replacement locations.

SURVEILLANCE REQUIREMENTS

2.11.1 The radiological environmental monitoring samples shall be collected pursuant to Table 2-7 from the locations given in the table and Figures 5.1, 5.2, and 5.3 and shall be analyzed pursuant to the requirements of Tables 2-7 and 2-9.

TABLE 2-7

OPERATIONAL RADIOLOGICAL ENVIRONMENTAL MONITORING PROGRAM

Exposure Pathway and/or Sample	Number of Samples and Locations	Sampling/ Collection Frequency	Type/Frequency of Analysis
1.AIRBORNE Radioiodine and particulates	One sample each: C07, C18, C40, C41, C46 and Control Location C47	Continuous sampler/ Weekly collection	Radioiodine canister: a) I-131 analysis weekly Particulate sampler: a) Gross β at ≥ 24 hours/following weekly filter change. b) Composite gamma special analysis (by location)/ quarterly. (Gamma Spectral Analysis shall also be performed on individual samples if gross beta activity of any sample is greater than 1.0 p Ci/m³ and which is also greater than ten times the control sample activity.
2.DIRECT RADIATION	1) Site Boundary: C60, C61, C62, C63, C64, C65, C66, C67, C68, C69, C41, C70, C27, C71, C72, C73 2) Five Miles: C18, C03, C04, C74, C75, C76, C08, C77, C09, C78, C14G, C01, C79 3) Control Location: C47	Continuous placement/Quarterly collection	Gamma exposure rate/quarterly

TABLE 2-7 (Continued)

OPERATIONAL RADIOLOGICAL ENVIRONMENTAL MONITORING PROGRAM

Exposure Pathway and/or Sample	Number of Samples and Locations	Sampling/ Collection Frequency	Type/Frequency of Analysis
3.WATERBORNE Seawater	One sample each: C14H, C14G Control Location C13	Grab sample/Monthly	Gamma spectral analysis/monthly Tritium analysis on each sample or on a quarterly composite of monthly samples
Ground water	One sample: C40 (Control Location)	Grab sample/semiannual	Gamma spectral and Tritium analysis/each sample
Drinking water	One sample each: C07, C10, C18 (All Control Locations)	Grab sample/quarterly	Gamma spectral and Tritium analysis/each sample
Shoreline sediment	One sample each: C14H, C14M, C14G Control Location C09	Semiannual sample	Gamma spectral analysis/each sample
4. INGESTION Fish & Invertebrates	One sample each: C29, Control Location C30	Quarterly: Oysters and carnivorous fish	Gamma spectral analysis on edible portions/each sample
Food Products	One sample each: C48a*, C48b*, Control Location C47	Monthly (when available): Sample compressed of three (3) types of broad leaf vegetation from each location	Gamma spectral and I-131 analysis/each sample
	One sample: C19	Annual during harvest: Citrus	Gamma spectral analysis/each sample
	One sample: C04	Annual during harvest: Watermelon	Gamma spectral analysis/each sample

* Stations C48a and C48b are located near the site boundary for gaseous effluents in the two sectors which yield the highest historical annual average D/Q values.

TABLE 2-8

REPORTING LEVELS FOR RADIOACTIVITY CONCENTRATIONS IN ENVIRONMENTAL SAMPLES

Analysis	Water (pCi/l)	Airborne Particulate or Gases (pCi/m³)	Fish (pCi/Kg, wet)	Milk (pCi/l)	Food Products (pCi/Kg, wet)
H-3	20,000[a]				
Mn-54	1,000		30,000		
Fe-59	400		10,000		
Co-58	1,000		30,000		
Co-60	300		10,000		
Zn-65	300		20,000		
Zr-Nb-95[b]	400				
I-131	2[c]	0.9		3	100
Cs-134	30	10	1,000	60	1,000
Cs-137	50	20	2,000	70	2,000
Ba-La-140[b]	200			300	

(a) For drinking water samples. This is 40 CFR Part 141 value. If no drinking water pathway exists, a value of 30,000 pCi/l may be used.

(b) An equilibrium mixture of the parent and daughter isotope which contains the reporting value of the parent isotope.

(c) For drinking water samples only.

TABLE 2-9

MAXIMUM VALUES FOR THE LOWER LIMITS OF DETECTION (LLD) a,d

Analysis	Water (pCi/l)	Airborne Particulate or Gases (pCi/m³)	Fish (pCi/Kg, wet)	Milk (pCi/l)	Food Products (pCi/Kg, wet)	Sediment (pCi/Kg, dry)
gross beta		0.01				
^{3}H	2000[b]					
^{54}Mn	15		130			
^{59}Fe	30		260			
^{58}Co	15		130			
^{60}Co	15		130			
^{65}Zn	30		260			
^{95}Zr-Nb	15[c]					
^{131}I	1[f]	0.07[g]		1	60	
^{134}Cs	15	0.05[e]	130	15	60	150
^{137}Cs	18	0.06[e]	150	18	80	180
^{140}Ba-La	15[c]			15[c]		

TABLE 2-9 (Continued)

TABLE NOTATION

a. The LLD* is the smallest concentration of radioactive material in a sample that will be detected with 95% probability with 5% probability of falsely concluding that a blank observation represents a "real" signal.

For a particular measurement system (which may include radiochemical separation):

$$LLD = 4.66s_b/(2.22EVYe^{-\lambda\Delta t})$$

Where:

LLD is the lower limit of detection as defined above (as picocurie per unit mass or volume),

s_b is the standard deviation of the background counting rate or of the counting rate of a blank sample as appropriate (as counts per minute),

E is the counting efficiency (as counts per disintegration),

V is the sample size (in units of mass or volume),

2.22 is the number of disintegrations per minute per picocurie,

Y is the fractional radiochemical yield (when applicable),

λ is the radioactive decay constant for the particular radionuclide, and

Δt is the elapsed time between environmental collection, or end of the sample collection period, and time of counting.

Typical values of E, V, Y, and Δt shall be used in the calculation.

* The LLD is defined as an a priori (before the fact) limit representing the capability of the measurement system and not as an a posteriori (after the fact) limit for a particular measurement. Analyses shall be performed in such a manner that the stated LLD's will be achieved under routine conditions. Occasionally, background fluctuations, unavoidable small sample sizes, the presence of interfering nuclides, or other uncontrollable circumstances may render these LLD's unachievable. In such cases, the contributing factors shall be identified and described in the Annual Radiological Environmental Operating Report.

TABLE 2-9 (Continued)

TABLE NOTATION

b. LLD for drinking water. If no drinking water pathway exits, a value of 3000 pCi/l may be used.

c. The specified LLD is for an equilibrium mixture of parent and daughter nuclides which contain 15 pCi/l of the parent nuclide.

d. Other peaks which are measurable and identifiable, together with the radionuclides in Table 2.9, shall be identified and reported.

e. Cs-134, and Cs-137 LLD's apply only to the quarterly composite gamma spectral analysis, not to analyses of single particulate filters.

f. LLD for drinking water. If no drinking water pathway exists, the LLD of gamma isotopic analysis may be used.

g. LLD for I-131 applies to a single weekly filter.

LAND USE CENSUS

2.12 A land use census shall be conducted and shall identify the location of the nearest milk animal, the nearest residence and the nearest garden* of greater than 500 square feet producing fresh leafy vegetables in each of the land based meteorological sectors within a distance of five miles.

APPLICABILITY: At all times.

ACTION:

a. With a land use census identifying a location(s) that yields a calculated dose or dose commitment greater than the values currently being calculated by Specification 2.9.1, identify the new location in the next Annual Radiological Environmental Operating Report.

b. With a land use census identifying a location(s) which yields a calculated dose or dose commitment (via the same exposure pathway) which is at least 20% greater than at a location from which samples are currently being obtained in accordance with Specification 2.11, this location shall be added to the radiological environmental monitoring program within 30 days. The new sampling location shall replace the present sampling location, which has the lower calculated dose or dose commitment (via the same exposure pathway), after June 30 following this land use census. Identification of the new location and revisions of the appropriate figures shall be submitted with the next Radioactive Effluent Release Report.

* Broad leaf vegetation sampling may be performed at the site boundary in the direction sector with the highest D/Q in lieu of the garden census.

SURVEILLANCE REQUIREMENTS

2.12.1 The land use census shall be conducted at least once per 12 months during the growing season by a door-to-door survey, aerial survey, or by consulting local agriculture authorities, using that information which will provide adequate results.

INTERLABORATORY COMPARISON PROGRAM

2.13 Analyses shall be performed on radioactive materials supplied as part of an Interlaboratory Comparison Program which has been approved by the Commission. A summary of the results obtained from this program shall be included in the Annual Radiological Environmental Operating Report.

APPLICABILITY: At all times.

ACTION:

a. With analyses not being performed as required above, report the corrective actions taken to prevent a recurrence to the Commission in the Annual Radiological Environmental Operating Report.

SURVEILLANCE REQUIREMENTS

2.13.1 No surveillance requirements other than those required by the Interlaboratory Comparison Program.

2.14 SPECIAL REPORTS

Special reports shall be submitted to the Nuclear Regulatory Commission within the time period specified for each report. These reports shall be submitted covering the activities identified below. A separate Licensee Event Report, when required by 10 CFR 50.73 (a), need not be submitted if the Special Report meets the requirements of 10 CFR 50.73 (b) in addition to the requirements of the applicable referenced Specification.

A. Dose due to radioactive materials in liquid effluents in excess of specified limits, Specification 2.6.

B. Dose due to noble gas in gaseous effluents in excess of specified limits, Specification 2.8.

C. Total calculated dose due to release of radioactive effluents exceeding twice the limits of Specifications 2.6a, 2.6b, 2.8a, 2.8b, 2.9a, or 2.9b (required by Specification 2.10).

D. Dose due to I-131, I-133, Tritium, and radioactive particulates with greater than eight day half-lives, in gaseous effluents in excess of specified limits, Specification 2.9.

E. Failure to process liquid radwaste, in excess of limits, prior to release, Specification 2.3.

F. Failure to process gaseous radwaste, in excess of limits, prior to release, Specification 2.4.

G. Measured levels of radioactivity in environmental sampling medium in excess of the reporting levels of Table 2-8, when averaged over any quarterly sampling period, Specification 2.11.

H. Inoperable Mid or High Range Noble Gas Effluent Monitoring Instrumentation, Specification 2.2.

I. Meteorological monitoring channel inoperable for more than 7 days, Specification 2.15.

J. WGDT explosive gas monitoring instrumentation inoperable for more than 30 days, Specification 2.16.

METEOROLOGICAL INSTRUMENTATION

2.15 The meteorological monitoring instrumentation channels shown in Table 2-10 shall be OPERABLE.

APPLICABILITY: At all times.

ACTION:

a. With one or more required meteorological monitoring channels inoperable for more than 7 days, prepare and submit a Special Report to the Commission pursuant to Specification 2.14 within the next 10 days outlining the cause of the malfunction and the plans for restoring the channel(s) to OPERABLE status.

SURVEILLANCE REQUIREMENTS

2.15.1 Each of the above meteorological monitoring instrumentation channels shall be demonstrated OPERABLE by the performance of the CHANNEL CHECK and CHANNEL CALIBRATION operations at the frequencies shown in Table 2-11.

TABLE 2-10

METEOROLOGICAL MONITORING INSTRUMENTATION

INSTRUMENT	MINIMUM LOCATION	OPERABLE
1. WIND SPEED		
Nominal Elev.	33'	1
2. WIND DIRECTION		
Nominal Elev.	33'	1
3. STABILITY CLASS (DELTA-T OR SIGMA-THETA)		
Nominal Elev.	*	1

---

* 33' for sigma-theta. 175'-33' for delta-T.

NOTE: Back up meteorological tower instruments may be used to meet the minimum operability requirement of ODCM specification 2.15.

TABLE 2-11

METEOROLOGICAL MONITORING INSTRUMENTATION SURVEILLANCE REQUIREMENTS

INSTRUMENT		CHANNEL CHECK	CHANNEL CALIBRATION
1. WIND SPEED			
Nominal Elev.	33'	D	SA
2. WIND DIRECTION			
Nominal Elev.	33'	D	SA
3. STABILITY CLASS (DELTA-T OR SIGMA-THETA)			
Nominal Elev.	*	D	SA

* 33' for sigma-theta. 175' - 33' for delta - T

WASTE GAS DECAY TANK - EXPLOSIVE GAS MONITORING INSTRUMENTATION

2.16 The Waste Gas Decay Tanks shall have one hydrogen and one oxygen monitoring channel OPERABLE.

APPLICABILITY: During WASTE GAS SYSTEM operation.

ACTION:

a. With the number of OPERABLE channels less than required above, operation of this system may continue, provided grab samples are collected and analyzed:

   (1) at least once per 4 hours during DEGASSING operations

   (2) at least once per 24 hours during other operations

b. If the affected channel(s) cannot be returned to OPERABLE status within 30 days, submit a special report to the Commission pursuant to Specification 2.14 within 30 days describing the reasons for inoperability and a schedule for corrective action.

SURVEILLANCE REQUIREMENTS

2.16.1 The Waste Gas Decay Tank explosive gas monitoring instrumentation shall be demonstrated operable by performing the CHANNEL CHECK, CHANNEL FUNCTIONAL TEST, and CHANNEL CALIBRATION at the frequencies shown in Table 2-12.

TABLE 2-12

WASTE GAS SYSTEM EXPLOSIVE GAS MONITORING INSTRUMENTATION

SURVEILLANCE REQUIREMENTS

INSTRUMENT	CHANNEL CHECK	CHANNEL CALIBRATION	CHANNEL FUNCTIONAL TEST
1. Hydrogen Monitors	D	Q*	M
2. Oxygen Monitors	D	Q*	M

* The CHANNEL CALIBRATION shall include the use of standard gas samples containing a nominal:

Hydrogen Monitors

a. 1 volume percent hydrogen, balance nitrogen.
b. 4 volume percent hydrogen, balance nitrogen.

Oxygen Monitors

c. 1 volume percent oxygen, balance nitrogen.
d. 4 volume percent oxygen, balance nitrogen.

WASTE GAS DECAY TANKS

2.17 The quantity of radioactivity contained in each Waste Gas Decay Tank shall be limited to less than or equal to 39000 curies (considered as Xe 133).

APPLICABILITY: At all times.

ACTION:

a. With the quantity of radioactivity in any Waste Gas Decay Tank exceeding the above limit, immediately suspend all additions of radioactive material to that tank, and within 48 hours reduce the tank contents to within its limit.

SURVEILLANCE REQUIREMENTS

2.17.1 The quantity of radioactive material contained in each Waste Gas Decay Tank shall be determined* to be within the limit at least once per 7 days whenever radioactive materials are being added to the tank, and at least once per 24 hours during primary coolant system DEGASSING operations.

* Determining that each waste gas decay is in compliance with the limit may be done by a method other than direct sampling of the tank provided it is in accordance with an approved procedure.

WASTE GAS DECAY TANK - EXPLOSIVE GAS MIXTURE

2.18 The concentration of oxygen in any Waste Gas Decay Tank shall be limited to less than or equal to 2% by volume whenever the concentration of hydrogen in that Waste Gas Decay Tank is greater than or equal to 4% by volume.

NOTE: Whenever the concentration of hydrogen in the bulk of the waste gas header, including the cover gas of the reactor coolant bleed tanks, is greater than 4%, or the oxygen concentration is greater than 2%, then consideration should be given to purging the waste gas header with nitrogen.

APPLICABILITY: At all times.

ACTION:

Whenever the concentration of hydrogen in any Waste Gas Decay Tank is greater than or equal to 4% by volume, and:

a. The concentration of oxygen in that Waste Gas Decay Tank is greater than 2% by volume, but less than 4% by volume, without delay begin to reduce the oxygen concentration to within its limit.

b. The concentration of oxygen in that Waste Gas Decay Tank is greater than or equal to 4% by volume, immediately suspend additions of waste gas to that Waste Gas Decay Tank and without delay begin to reduce the oxygen concentration to within its limit.

SURVEILLANCE REQUIREMENTS

2.18.1 The concentrations of hydrogen and oxygen in the in-service Waste Gas Decay Tank shall be continuously monitored with the hydrogen and oxygen monitors required OPERABLE by Specification 2.16 or by sampling in accordance with Specification 2.16 action a.

3.0 SPECIFICATION BASES

3.1 RADIOACTIVE LIQUID EFFLUENT MONITORING INSTRUMENTATION BASIS

The radioactive liquid effluent instrumentation is provided to monitor and control, as applicable, the releases of radioactive materials in liquid effluents during actual or potential releases of liquid effluents. The alarm/trip setpoints for these instruments shall be calculated in accordance with the procedures in the OFFSITE DOSE CALCULATION MANUAL (ODCM) to ensure that the alarm/trip will occur prior to exceeding the 10 times limits of 10 CFR Part 20. The OPERABILITY and use of this instrumentation is consistent with the requirements of General Design Criteria 60, 63 and 64 of Appendix A to 10 CFR Part 50.

3.2 RADIOACTIVE GASEOUS EFFLUENT MONITORING INSTRUMENTATION BASIS

The radioactive gaseous effluent instrumentation is provided to monitor and control, as applicable, the releases of radioactive materials in gaseous effluents during actual or potential releases of gaseous effluents. The alarm/trip setpoints for these instruments are calculated in accordance with the procedures in the OFFSITE DOSE CALCULATION MANUAL (ODCM) to ensure that the alarm/trip will occur prior to exceeding a Site Boundary dose rate of 500 mrem/year to the total body. The OPERABILITY and use of this instrumentation is consistent with the requirements of General Design Criteria 60, 63, and 64 of Appendix A to 10 CFR Part 50.

3.3 LIQUID RADWASTE TREATMENT SYSTEM BASIS

The requirement that these systems be used when specified provides assurance that the releases of radioactive materials in liquid effluents will be kept "as low as reasonably achievable" (ALARA). This specification implements the requirements of 10 CFR Part 50.36a, General Design Criterion 60 of Appendix A to 10 CFR Part 50 and the design objective given in Section II.D of Appendix I to 10 CFR Part 50. The specified limits governing the use of appropriate portions of the liquid radwaste treatment system were specified as a suitable fraction of the dose design objectives set forth in Section II.A of Appendix I, 10 CFR Part 50, for liquid effluents.

3.4 WASTE GAS SYSTEM BASIS

The requirement that these systems be used when specified provides reasonable assurance that the releases of radioactive materials in gaseous effluents will be kept "as low as is reasonable achievable" (ALARA). This specification implements the requirements of 10 CFR Part 50.36a, General Design Criterion 60 of Appendix A to 10 CFR Part 50, and the design objectives given in Section II.D of Appendix I to 10 CFR Part 50. The specified limits governing the use of appropriate portions of the systems were specified as a suitable fraction of the dose design objectives set forth in Sections II.B and II.C of Appendix I, 10 CFR Part 50, for gaseous effluents.

3.5 LIQUID EFFLUENTS CONCENTRATION BASIS

This specification is provided to ensure that the concentration of radioactive materials released in liquid waste effluents to UNRESTRICTED AREAS will be less than 10 times the effluent concentration limits (ECLs) specified in 10 CFR Part 20. This limitation provides additional assurance that the levels of radioactive materials in bodies of water in UNRESTRICTED AREAS will result in exposures within the Section II.A design objectives of Appendix I, 10 CFR 50, to a MEMBER OF THE PUBIC. The concentration limit for Xe-133 was determined by calculating that amount of the isotope, which if present in water, would give a dose rate of 500 mrem/yr at the surface. Typically, over 90% of the noble gas released in liquid effluents at CR-3 is Xe-133. The concentration limit for all other dissolved or entrained noble gases is based upon the assumption that Xe-135 is the controlling radioisotope and its MPC in air (submersion) was converted to an equivalent concentration in water using the methods described in International Commission on Radiological Protection (ICRP) Publication 2.

3.6 LIQUID EFFLUENTS DOSE BASIS

This specification is provided to implement the requirements of Sections II.A. III-A and IV.A of Appendix I, 10 CFR Part 50. The Limiting Condition for Operation implements the guides set forth in Section II.A of Appendix I. The ACTION statement provides the required operating flexibility and at that same time implements the guides set forth in Section IV.A of Appendix I to assure that the releases of radioactive material in liquid effluents will be kept "as low as is reasonably achievable" (ALARA). The dose calculations in the OFFSITE DOSE CALCULATION MANUAL (ODCM) implement the requirements in Section III.A of Appendix I that conformance with the guides of Appendix I be shown by calculational procedures based on models and data, such that the actual exposure of a MEMBER OF THE PUBLIC through appropriate pathways is unlikely to be substantially underestimated. The equations specified in the OFFSITE DOSE CALCULATIONAL MANUAL (ODCM) for calculating the doses due to the actual release rates of radioactive materials in liquid effluents are consistent with the methodology provided in Regulatory Guide 1.109, "Calculation of Annual Doses to Man from Routine Releases of Reactor Effluents for the Purpose of Evaluating Compliance with 10 CFR Part 50, Appendix I," Revision 1, October 1977 and Regulatory Guide 1.113, "Estimating Aquatic Dispersion of Effluents from Accidental and Routine Reactor Releases for the Purpose of Implementing Appendix I," April 1977.

3.7 GASEOUS EFFLUENTS DOSE RATE BASIS

This specification is provided to ensure that the dose at any time at and beyond the SITE BOUNDARY from gaseous effluents will be within the annual dose limits of 10 CFR Part 20, §§ 20.1 - 20.602. The annual dose limits are the doses associated with the concentrations of 10 CFR Part 20, §§ 20.1 - 20.602, Appendix B, Table II, Column 1. These limits provide reasonable assurance that radioactive material discharged in gaseous effluents will not result in the exposure of a MEMBER OF THE PUBLIC, either within or outside the SITE BOUNDARY to annual average concentrations exceeding the limits specified in Appendix B, Table II of 10 CFR Part 20 (10 CFR Part 20.106(b)(1)). For a MEMBER OF THE PUBLIC who may at time be within the SITE BOUNDARY, the occupancy of the MEMBER OF THE PUBLIC will be sufficiently low to compensate for any increase in the atmospheric diffusion factor above that for the SITE BOUNDARY. The specified release rate limits restrict, at all times, the corresponding gamma and beta dose rates above to a MEMBER OF THE PUBLIC at or beyond the SITE BOUNDARY to less than or equal to 500 mrem/year to the total body or to less than or equal to 3000 mrem/year to the skin. These release rate limits also restrict, at all times, the corresponding thyroid dose rate above background to a child via the inhalation pathway to less than or equal to 1500 mrem/year.

3.8 GASEOUS EFFLUENTS DOSE NOBLE GASES BASIS

This Specification is provided to implement the requirements of Sections II.B, III.A and IV.A of Appendix I, 10 CFR Part 50. The Limiting Condition for Operation implements the guides set forth in Section II.B of Appendix I. The ACTION statements provide the required operating flexibility and at the same time implement the guides set forth in Section IV.A of Appendix I to assure that the releases of radioactive material in gaseous effluents will be kept "as low as reasonably achievable" (ALARA). The Surveillance Requirements implement the requirements in Section III.A of Appendix I that conformance with the guides of Appendix I be shown by calculational procedures based on models and data such that the actual exposure of a MEMBER OF THE PUBLIC through appropriate pathways is unlikely to be substantially underestimated. The dose calculations established for calculating the doses due to the actual release rates of radioactive noble gases in gaseous effluents are consistent with the methodology provided in Regulatory Guide 1.109, "Calculational of Annual Doses to Man from Routine Releases of Reactor Effluents for the Purpose of Evaluating Compliance with 10 CFR Part 50, Appendix I," Revision 1, October 1977 and Regulatory Guide 1.111, "Methods for Estimating Atmospheric Transport and Dispersion of Gaseous Effluents in Routine Releases from Light-Water Cooled Reactors," Revision 1, July 1977. The equations provided for determining the air doses at and beyond the SITE BOUNDARY are based upon the historical average atmospheric conditions.

3.9 GASEOUS EFFLUENTS DOSE I-131, I-133, TRITIUM, AND RADIOACTIVE PARTICULATE BASIS

This specification is provided to implement the requirements of Sections II.C, III.A, and IV.A of Appendix I, 10 CFR Part 50. The Limiting Conditions for Operation are the guides set forth in Section II.C of Appendix I. The ACTION statements provide the required operating flexibility and at the same time implement the guides set forth in Section IV.A of Appendix I to assure that the releases of radioactive materials in gaseous effluent will be kept "as low as is reasonably achievable" (ALARA). The calculational methods specified in the Surveillance Requirements implement the requirements in Section III.A of Appendix I that conformance with the guides of Appendix I be shown by calculational procedures based on models and data, such that the actual exposure of a MEMBER OF THE PUBLIC through appropriate pathways is unlikely to be substantially underestimated. The methods for calculating the dose due to the actual release rates of the subject materials are consistent with the methodology provided in Regulatory Guide 1.109, "Calculation of Annual Doses to Man from Routine Releases of Reactor Effluents for the Purpose of Evaluating Compliance with 10 CFR Part 50, Appendix I," Revision 1, October 1977 and Regulatory Guide 1.111, "Methods for Estimating Atmospheric Transport and Dispersion of Gaseous Effluents in Routine Releases from Light-Water-Cooled Reactors," Revision 1, July 1977. These equations also provide for determining the actual doses based upon the historical average atmospheric conditions. The release rate specifications for I-131, I-133,

Tritium, and radioactive particulates with half-life less than eight days are dependent on the existing radionuclide pathways to man, in areas at and beyond the SITE BOUNDARY. The pathways which were examined in the development of these calculations were: 1) Individual inhalation of airborne radionuclides, 2) deposition of radionuclides onto green leaf vegetation with subsequent consumption by man, 3) deposition onto grassy areas where milk animals and meat producing animals graze with consumption of the milk and meat by man, and 4) deposition on the ground with subsequent exposure of man.

3.10 TOTAL DOSE BASIS

This specification is provided to meet the dose limitations of 40 CFR Part 190 that have now been incorporated into 10 CFR Part 20 by 46 FR 18525. The specification requires the preparation and submittal of a Special Report whenever the calculated doses from plant radioactive effluents exceed twice the design objective doses of Appendix I. For sites containing up to 4 reactors, it is highly unlikely that the resultant dose to a MEMBER OF THE PUBLIC will exceed the dose limits of 40 CFR Part 190 if the individual reactors remain within the reporting requirement level. The Special Report will describe a course of action that should result in the limitation of the annual dose to a MEMBER OF THE PUBLIC to within the 40 CFR Part 190 limits. For the purposes of the Special Report, it may be assumed that the dose commitment to the MEMBER OF THE PUBLIC from other uranium fuel cycle sources is negligible, with the exception that dose contributions from other nuclear fuel cycle facilities at the same site or within a radius of 8 km must be considered. If the dose to any MEMBER OF THE PUBLIC is estimated to exceed the requirements of 40 CFR Part 190, the Special Report with a request for a variance (provided the release conditions resulting in violation of 40 CFR Part 190 have not already been corrected), in accordance with the provisions of 40 CFR part 190.11 and 10 CFR Part 20.405c, is considered to be a timely request and fulfills the requirements of 40 CFR Part 190 until NRC staff action is completed. The variance only relates to the limits of 40 CFR Part 190 and does not apply in any way to the other requirements for dose limitation of 10 CFR Part 20, as addressed in Specifications 2.5 thru 2.9. An individual is not considered a MEMBER OF THE PUBLIC during any period in which he/she is engaged in carrying out any operation that is part of the nuclear fuel cycle.

3.11 RADIOLOGICAL ENVIRONMENTAL MONITORING PROGRAM BASIS

The radiological monitoring program required by this specification provides measurements of radiation and of radioactive materials in those exposure pathways and for those radionuclides which lead to the highest potential radiation exposures of MEMBER OF THE PUBLIC resulting from the station operation. This monitoring program thereby supplements the radiological effluent monitoring program by verifying that the measurable concentrations of radioactive materials and levels of radiation are not higher than expected on the basis of the effluent measurements and modeling of the environmental exposure pathways. Program changes may be initiated based on operational experience.

The LLD's required by Table 2-9 are considered optimum for routine environmental measurements in industrial laboratories. The LLD's for drinking water meet the requirements of 40 CFR 141.

3.12 RADIOLOGICAL ENVIRONMENTAL MONITORING PROGRAM LAND USE CENSUS BASIS

This specification is provided to ensure that changes in the use of areas at or beyond the SITE BOUNDARY are identified and that modifications to the monitoring program are made if required by the results of this census. Adequate information gained from door-to-door or aerial surveys or through consultation with local agricultural authorities shall be used. This census satisfies the requirements of Section IV.B.3 of Appendix I to 10 CFR Part 50. Restricting the census to gardens of greater than 500 square feet provides assurance that significant exposure pathways via leafy vegetables will be identified and monitored since a garden of this size is the minimum required to produce the quantity (26 kg/year) of leafy vegetables assumed in Regulatory Guide 1.109 for consumption by a child. To determine this minimum garden size, the following assumption were used: 1) that 20% of the garden was used for growing broad leaf vegetation (i.e., similar to lettuce and cabbage), and 2) a vegetation yield of 2 kg/square meter.

3.13 RADIOLOGICAL ENVIRONMENTAL MONITORING INTERLABORATORY COMPARISON PROGRAM BASIS

The requirement for participation in an Interlaboratory Comparison Program is provided to ensure that independent checks on the precision and accuracy of the measurements of radioactive material in environmental sample matrices are performed as part of the quality assurance program for environmental monitoring in order to demonstrate that the results are reasonably valid.

3.14 EXPLOSIVE GAS MIXTURE

This specification is provided to ensure that the concentration of potentially explosive gas mixtures contained in the Waste Gas Decay Tanks is maintained below the flammability limits of hydrogen and oxygen. Maintaining the concentration of hydrogen and oxygen below their flammability limits provides assurance that the releases of radioactive materials will be controlled in conformance with the requirements of General Design Criterion 60 of Appendix A to 10 CFR Part 50.

3.15 WASTE GAS DECAY TANKS

Restricting the quantity of radioactivity contained in each waste gas decay tank provides assurance that in the event of a simultaneous uncontrolled release of all the tanks' contents, the resulting total body exposure to an individual at the nearest exclusion area boundary will not exceed 0.5 rem. This is consistent with Branch Technical Position ETSB 11-5.

3.16 WASTE GAS DECAY TANK - EXPLOSIVE GAS MONITORING INSTRUMENTATION

The OPERABILITY of the Waste Gas Decay Tank explosive gas monitoring instrumentation or the sampling and analysis program required by this specification provides for the monitoring (and controlling) of potentially explosive gas mixtures in the Waste Gas Decay Tanks.

3.17 METEOROLOGICAL INSTRUMENTATION

The OPERABILITY of the meteorological instrumentation ensures the sufficient meteorological data is available for estimating potential radiation doses to the public as a result of routine or accidental release of radioactive materials to the atmosphere. This capability is required to evaluate the needs for initiating protective measures to protect the health and safety of the public.

PART II

METHODOLOGIES

SECTION 1.0

RADIOACTIVE EFFLUENT

MONITOR SETPOINTS SPECIFICATIONS

TABLE I - RADIOACTIVE EFFLUENT MONITOR SETPOINTS

MONITOR	RELEASE TYPE BATCH	RELEASE TYPE CONT.	SETPOINT SPECIFICATION	NUCLIDE ANAL. TYPE **	NUCLIDE ANAL. FREQ.	SETPOINT CALCULATION	SETPOINT ADJUSTMENT
RM-A1 (Noble Gas)	X		1.1-1	1.2-1	P	1.3-1	1.4-1
RM-A1 (Noble Gas)		X	1.1-1	1.2-1	W	1.3-1	1.4-2
RM-A2 (Noble Gas)	X*	X	1.1-1	1.2-2	W/P*	1.3-1	1.4-3
RM-A11 (Noble Gas)	X		1.1-1	1.2-3	P	1.3-1	1.4-4
RM-L2 (Gamma)	X		1.1-2	1.2-4	P	1.3-2	1.4-5
RM-L7 (Gamma)	X	X	1.1-2	1.2-5	W	1.3-2	1.4-6 & 1.4-7
RM-A1 & RM-A2 (Iodine Channels)	N/A	N/A	1.1-3	NA	NA	1.3-3	NA

*This monitor is used in conjunction with (or instead of) RM-A11 to monitor the release of the waste gas decay tanks. Nuclide analysis and setpoint calculation must be performed for this monitor prior to waste gas decay tank release. At all other times, it is a continuous source monitor and the setpoint is determined weekly.

**For composited samples the results from the most recently completed analysis are used.

GASEOUS EFFLUENT MONITORS
SETPOINT SPECIFICATION 1.1-1
(Monitors RM-A1, RM-A2 and RM-A11)

The dose rate at or beyond the SITE BOUNDARY, due to radioactive materials released in gaseous effluents, is limited as follows:

Noble Gases -	500 mrem/year (total body) 3000 mrem/year (skin)
I-131, I-133, Tritium and Radioactive particulates with greater than 8 day half-lives	1500 mrem/year (any organ via the inhalation pathway.)

The radioactive gaseous effluent monitors (RM-A1, RM-A2 and RM-A11) shall have their alarm/trip setpoints set to ensure that the above total body, noble gas dose rate limit is not exceeded.

LIQUID EFFLUENT MONITORS
SETPOINT SPECIFICATION 1.1-2
(Monitors RM-L2, RM-L7)

The concentration of radioactive materials in liquid effluents, released to UNRESTRICTED AREAS, is limited to 10 times the effluent concentrations specified by 10 CFR 20, for radionuclides other than noble gases. For all dissolved or entrained noble gases, except Xe-133, the concentration limit is 2E-4 μCi/ml. For Xe-133 the concentration limit is 1E-3 μCi/ml.

The radioactive liquid effluent monitors (RM-L2 and RM-L7) shall have their alarm/trip setpoints set to ensure that the above gamma emitting concentration limits are not exceeded.

GASEOUS EFFLUENT MONITORS
SETPOINT SPECIFICATION 1.1-3
(Iodine Channels in RM-A1 and RM-A2)

Sampling and analyses of the Reactor Building Purge Exhaust, and the Auxiliary Building and Fuel Handling Area Exhaust for radioiodine and other gamma emitters, shall be performed at least once per 24 hours for at least 7 days when the Radioiodine concentration in the Auxiliary Building and Fuel Handling Area or the Reactor Building Purge Exhaust Ducts will lead to a release which is greater than or equal to the 10 CFR 20, Appendix B, Table II, Column I limits, at or beyond the SITE BOUNDARY.

The iodine monitoring channels in radiation monitors RM-A1 and RM-A2 shall have their alarm setpoints set to alarm when the above radioiodine concentration limits are exceeded.

NUCLIDE ANALYSIS 1.2-1
REACTOR BUILDING PURGE EXHAUST

NUCLIDE	SAMPLE SOURCE	LLD[b] (uCi/cc)
A. Principal Gamma Emitters [a]		
Mn-54, Fe-59, Co-58, Co-60, Zn-65, Mo-99, Cs-134, Cs-137, Ce-141, Ce-144	Pre-release grab sample for Batch Type release. Weekly Particulate Filter Analysis for continuous(c) type release.	$1x10^{-4}/1x10^{-11}$
Kr-87, Kr-88, Xe-133, Xe-133m, Xe-135, Xe-138	Pre-release grab sample for Batch type release. Noble Gas monitor during batch and continuous releases Grab sample within 2-6 hr. following startup, shutdown or 15% RTP change in 1 hr.	$1x10^{-4}$
B. Iodine 131	Pre-release grab sample for Batch type release. Weekly charcoal filter and once per 24 hr for 7 days following startup shutdown or 15% RTP change in 1 hr if I-131 concentration at site boundary > 10 CFR 20 limit.	$NA/1 \times 10^{-12}$
C. Tritium	Pre-release Grab Sample and within 12-24 hr following flooding of refueling canal and once per 7 days while canal is flooded.	$1x10^{-6}$
D. Gross Alpha	Monthly Particulate Filter Composite	$1x10^{-11}$
E. Sr-89	Quarterly Particulate Filter Composite	$1x10^{-11}$
F. Sr-90	Quarterly Particulate Filter Composite	$1x10^{-11}$

(a) Other identified Gamma Emitters not listed in this table shall be included in dose and setpoint calculations.
(b) The first value refers to the LLD for pre-release grab sample; the second value refers to the LLD for weekly Particulate Filter Analysis.
(c) Reactor Building Purge is considered continuous after a minimum of one Reactor Building volume has been released on a continuous basis (i.e., first volume is a batch type).

NUCLIDE ANALYSIS 1.2-2
AUXILIARY BUILDING AND FUEL HANDLING AREA EXHAUST

NUCLIDE	SAMPLE SOURCE	LLD[b] (uCi/ml)
A. Principal Gamma Emitters [a]		
Mn-54 Fe-59 Co-58 Co-60 Zn-65 Mo-99 Cs-134 Cs-137 Ce-141 Ce-144	Weekly Particulate Filter Analysis.	$1x10^{-4}/1x10^{-11}$
Kr-87 Kr-88 Xe-133 Xe-133m Xe-135 Xe-138	Monthly Grab Sample and Continuous Noble Gas monitor. Grab sample within 2-6 hr following startup, shutdown or 15% RTP change in 1 hr.	$1x10^{-4}$
B. Iodine 131	Weekly Charcoal Filter analysis and once per 24 hr for 7 days following startup shutdown or 15% RTP change in 1 hr if I-131 concentration at site boundary > 10 CFR 20 limit.	$1x10^{-12}$
C. Tritium	Monthly Grab Sample and within 12-24 hr following flooding of refueling canal and once per 7 days while canal is flooded.	$1x10^{-6}$
D. Gross Alpha	Monthly Particulate Filter Composite	$1x10^{-11}$
E. Sr-89	Quarterly Particulate Filter Composite	$1x10^{-11}$
F. Sr-90	Quarterly Particulate Filter Composite	$1x10^{-11}$

(a) Other identified Gamma Emitters not listed in this table shall be included in dose and setpoint calculations.
(b) The first value refers to the LLD for pre-release grab sample; the second value refers to the LLD for weekly Particulate Filter Analysis.

NUCLIDE ANALYSIS 1.2-3
WASTE GAS DECAY TANKS

NUCLIDE	SAMPLE SOURCE	LLD[b] (uCi/ml)
A. Principal Gamma Emitters [a]		
Mn-54 Fe-59 Co-58 Co-60 Zn-65 Mo-99 Cs-134 Cs-137 Ce-141 Ce-144	Pre-release Grab sample and Weekly Particulate Filter Sample from RM-A2	$1x10^{-4}/1x10^{-11}$
Kr-87 Kr-88 Xe-133 Xe-133m Xe-135 Xe-138	Pre-release Grab sample.	$1x10^{-4}$
B. Iodine 131	Weekly Charcoal Filter from RM-A2.	$1x10^{-12}$

(a) Other identified Gamma Emitters not listed in this table shall be included in dose and setpoint calculations.
(b) The first value refers to the LLD for pre-release grab sample; the second value refers to the LLD for weekly Particulate Filter Analysis.

NUCLIDE ANALYSIS 1.2-4
EVAPORATOR CONDENSATE STORAGE TANKS, LAUNDRY AND SHOWER SUMP TANKS, SECONDARY DRAIN TANK

NUCLIDE	SAMPLE SOURCE	LLD(uCi/ml)
A. Principal Gamma Emitters [a]		
Mn-54 Fe-59 Co-58 Co-60 Zn-65 Mo-99 Cs-134 Cs-137 Ce-141 Ce-144	Pre-release Grab Sample	$5x10^{-7}$
B. Iodine 131	Pre-Release Grab Sample	$1x10^{-6}$
C. Dissolved and Entrained Noble Gases	Monthly Grab Sample	$1x10^{-5}$
D. Tritium	Monthly Composite	$1x10^{-5}$
E. Gross Alpha	Monthly Composite	$1x10^{-7}$
F. Sr-89	Quarterly Composite	$5x10^{-8}$
G. Sr-90	Quarterly Composite	$5x10^{-8}$
H. Fe-55	Quarterly Composite	$1x10^{-6}$

(a) Other identified Gamma Emitters not listed in this table shall be included in dose and setpoint calculations.

NUCLIDE ANALYSIS 1.2-5
SECONDARY DRAIN TANK AND/OR
PLANT CONDENSATE

NUCLIDE		SAMPLE SOURCE	LLD(uCi/ml)
A.	Principal Gamma Emitters [a]		
	Mn-54 Fe-59 Co-58 Co-60 Zn-65 Mo-99 Cs-134 Cs-137 Ce-141 Ce-144	Weekly Composite	$5x10^{-7}$
B.	Iodine 131	Weekly Composite	$1x10^{-6}$
C.	Dissolved and Entrained Noble Gases	Monthly Grab Sample	$1x10^{-5}$
D.	Tritium	Monthly Composite	$1x10^{-5}$
E.	Gross Alpha	Monthly Composite	$1x10^{-7}$
F.	Sr-89	Quarterly Composite	$5x10^{-8}$
G.	Sr-90	Quarterly Composite	$5x10^{-8}$
H.	Fe-55	Quarterly Composite	$1x10^{-6}$

(a) Other identified Gamma Emitters not listed in this table shall be included in dose and setpoint calculations.

PRE-RELEASE CALCULATION 1.3-1
GASEOUS RADWASTE RELEASE

I. INTRODUCTION

Prior to initiating a release of gaseous radwaste, it must be determined that the concentration of radionuclides to be released, and the flow rates at which they are released will not cause the dose rate limitations of Specification 1.1-1 to be exceeded.

II. INFORMATION REQUIRED

Results of appropriate Nuclide Analysis from Section 1.2

III. CALCULATIONS

Noble Gas Gamma Emissions

Dose Rate (Total Body) = $\Sigma\ (X/Q)K_iQ_i$ mrem/yr. (1.1)

Noble Gas Beta Emissions

Dose Rate (Skin) = $\Sigma\ (X/Q)Q_i(L_i + 1.1M_i)$ mrem/yr. (1.2)

Iodine 131, Iodine 133, Tritium, Radioactive Particulates

Dose Rate (I,T,P) = $\Sigma\ (X/Q)P_iQ_i$ mrem/yr. (1.3)

where:

K_i = The total body dose factor due to gamma emissions for each identified noble gas radionuclide, in mrem/yr per $\mu Ci/m^3$. (See Table 4.4-1).

L_i = The skin dose factor due to beta emissions for each identified noble gas radionuclide, in mrem/yr per $\mu Ci/m^3$. (See Table 4.4-1).

M_i = The air dose factor due to gamma emissions for each identified noble gas radionuclide, in mrad/yr per $\mu Ci/m^3$ (unit conversion constant of 1.1 mrem/mrad converts air dose to skin dose). (See Table 4.4-1).

P_i = The dose parameter for radionuclides other than noble gases for the inhalation pathway, in mrem/yr per $\mu Ci/m^3$. (See Table 4.4-3).

Q_i = The release rate of radionuclides, i, in gaseous effluent from individual release sources, in µCi/sec (per unit, unless otherwise specified). Q_i = Effluent stream nuclide concentration x flow rate.

Flow Rates (Variable - based on setpoint needs, nominal or maximum values listed below.)

1) Reactor Building Purge Exhaust Duct = 50,000 cfm = 2.4×10^7 cc/sec

2) Auxiliary Building and Fuel Handling Area Exhaust Duct= 156,000 cfm = 7.4×10^7 cc/sec

3) Waste Gas Decay Tank Release Line = 50 cfm max = 2.4×10^4 cc/sec

(X/Q) = 2.5×10^{-6} sec/m^3. For all vent releases. The highest calculated annual average relative concentration for any area at or beyond the unrestricted area boundary.

In order for a gaseous release to be within the limits of specification 1.1-1, the Projected Dose Rate Ratio (PDRR) must not exceed 1. The PDRR for each limit is calculated as follows:

$$PDRR_{TB} = PDR_{TB} / 500 \quad (1.4)$$

$$PDRR_{SK} = PDR_{SK} / 3000 \quad (1.5)$$

$$PDRR_{ORG} = PDR_{ORG} / 1500 \quad (1.6)$$

PDR_{TB} = Projected Dose Rate to the TOTAL BODY due to noble gas emissions.

PDR_{SK} = Projected Dose Rate to the SKIN due to noble gas emissions.

PDR_{ORG} = Projected Dose Rate to any organ due to inhalation of iodine, tritium and particulates with half-lives greater than 8 days.

500 = The allowable total body dose rate due to noble gas gamma emissions in mrem/yr.

3000 = The allowable skin dose rate due to noble gas beta emissions in mrem/yr.

1500 = The allowable organ dose rate in mrem/yr.

Equations 1.1, 1.2, and 1.3 are solved for each release type and release point currently releasing or awaiting release. If relationships 1.4, 1.5, and 1.6 are satisfied, the release can be made under the assumed flow rates. If one or more of the relationships 1.4, 1.5 and 1.6 are not satisfied, action must be taken to reduce the the radionuclide release rate prior to initiating a release (or to reduce the radionuclide release rate already in progress).

The following actions are available to reduce the release rates at the three release points.

1) Waste Gas Decay Tanks

a) Release Valve may be throttled
b) Tank contents may be diluted
c) Release may be delayed for longer decay time.

2) Reactor Building Purge Exhaust Duct

a) Dilution flow may be opened to reduce purge rate while maintaining the same flow rate.

3) Auxiliary Building and Fuel Handling Area Exhaust

a) Reduce inlet air supply to areas in Auxiliary Building to reduce radioactivity source rate to vent.
b) Identify and isolate the sources of radioactive releases into the Auxiliary Building.

Effluent Monitor LLD Determination

The relationship given below may be used to calculate a monitor LLD.

$$LLD = (4.66\sqrt{B})/Slope$$

B = Average monitor background count rate in cpm.

Slope = Slope of monitor calibration curve in cpm/μCi/ml.

PRE-RELEASE CALCULATION 1.3-2
LIQUID RADWASTE RELEASE

I. INTRODUCTION

Prior to initiating a release of liquid radwaste, it must be determined that the concentration of radionuclides to be released and the flow rates at which they will be released will not lead to a release concentration greater than the limits of specification 1.1-2 at the point of discharge.

II. INFORMATION REQUIRED

Results of appropriate Nuclide Analysis from Section 1.2

III. CALCULATIONS

$$\text{Discharge Concentration} = 0.1\left[\Sigma \frac{C_{\gamma i}}{ECL_{\gamma i}} + \frac{C_G}{2E\text{-}5} + \frac{C_{XE\text{-}133}}{1E\text{-}4} + \frac{C_a}{ECL_a} + \frac{C_T}{ECL_T} + \frac{C_s}{ECL_s} + \frac{C_{Fe}}{ECL_{Fe}}\right] \div \left[\frac{D+E}{E}\right]$$

where:

$C_{\gamma i}$	=	The concentration of isotope i, in the gamma spectrum excluding dissolved or entrained noble gases.
C_G	=	Total dissolved or entrained noble gas concentration, excluding Xe-133.
$C_{XE\text{-}133}$	=	XE-133 concentration.
C_T	=	Tritium Concentration from most recent analysis.
C_a	=	Gross alpha concentration from most recent analysis.
C_s	=	Sr-89, 90 concentration from most recent analysis.
C_{Fe}	=	Fe-55 concentration from most recent analysis.
E	=	Effluent Stream Flow Rate
D	=	Dilution Stream Flow Rate (Nuclear Services and Decay Heat seawater flow only)
ECL	=	10CFR20 Appendix B, effluent concentration limit.

If Discharge Concentration is less than or equal to 1, the discharge may be initiated. If Discharge Concentration is greater than 1, then release parameters must be changed to assure that Discharge Concentration is not greater than 1. Changes include reducing tank concentration by decay or dilution, reducing the waste stream release rate, or increasing dilution water flow rate.

PRE-RELEASE CALCULATION 1.3-3
GASEOUS EFFLUENT IODINE MONITORS

I. INTRODUCTION

In order to determine the setpoints for these monitors, the following assumptions are used.

A. The release rate through the Auxiliary Building and Fuel Handling Area exhaust duct is 7.4×10^7 cc/sec. (156,000 cfm).

B. The release rate through the Reactor Building Purge Exhaust Duct is 2.4×10^7 cc/sec (50,000 cfm).

C. A limitless supply of uniformly concentrated I-131 is available to supply the Exhaust Ducts.

D. The iodine filter has been installed for 8 hours and operating at a constant flow rate of 472 cc/sec (1 cfm). Therefore, total flow through the filter has been 1.36×10^7 cc.

II. CALCULATIONS

The limiting concentration of Iodine in the vent which would result in a concentration equal to the 10 CFR 20 limit at the site boundary is calculated as follows:

$$C_V = C_I / [(X/Q)FK]$$

where:

C_V = The Concentration of Radioiodine in the vent in µCi/cc.

C_I = The 10 CFR 20 effluent concentration limit for Iodine 131, 2×10^{-10} µCi/cc.

F = The duct flow rate: 2.4×10^7 cc/sec for the Reactor Building Purge Exhaust Duct and 7.4×10^7 cc/sec for the Auxiliary Building and Fuel Handling Area Exhaust Duct.

K = Unit conversion constant, 1×10^{-6} m^3/cc

X/Q = The highest calculated annual average concentration for any area at or beyond the unrestricted area boundary, 2.5×10^{-6} sec/m^3.

Solving eqn. 1.7 for the Reactor Building Purge exhaust vent yields:

$C_{V(RB)} = 3.33 \times 10^{-6}$ µCi/cc

Solving eqn. 1.7 for the Auxiliary Building & Fuel Handling Area Exhaust vent yields:

$C_{V(AB)} = 1.1 \times 10^{-6}$ µCi/cc

In order to determine the total quantity of Iodine 131 collected on the filter, the values of C_v above are multiplied by the volume assumed to have passed through the filter

$$Q_I = fkC_v \qquad (1.8)$$

where:

Q_I = The total quantity of Iodine 131 collected on the filter, in μCi.

C_v = The concentration of Iodine 131 in the vent in μCi/cc.

f = The assumed total volume of vent atmosphere that has passed through the filter, 1.36×10^7 cc (1 CFM for 8 hours).

k = The Iodine removal efficiency of the filters: 90%

Solving eqn. 1.8 for the Reactor Building vent yields:

$$Q_{I(RB)} = 40.8\ \mu Ci$$

Solving eqn. 1.8 for the Auxiliary Building and Fuel Handling Area vent yields:

$$Q_{I(AB)} = 13.5\ \mu Ci$$

These values are converted to counts per minute for the Iodine monitoring channels through use of the appropriate calibration curve.

Setpoint Calculation 1.4-1
Reactor Building Purge Exhaust Duct Monitor (RM-A1)
(Batch Type Releases)

INTRODUCTION

Following completion of the analyses required by Section 1.2-1 and determination of release rates and concentration limits in accordance with Section 1.3-1, the monitor setpoint requires adjustment to ensure that alarm and pathway isolation occur if nuclide concentration limits are exceeded.

METHODOLOGY

Reactor Building atmosphere is circulated through radiation monitor RM-A6 (containment atmosphere noble gas monitor) and the count rate is observed. The observed count rate is correlated to a corresponding count rate for RM-A1 (Reactor Building purge exhaust duct monitor), and factors are applied to account for background radiation, and the pressure difference between the detector chambers and exhaust vent. The obtained value establishes the maximum allowable setpoint. The alarm/trip setpoint is adjusted to this or a more conservative value prior to initiating the release. If the concentration of radionuclides to be released is less than the effluent monitor LLD "Net CPM" is obtained from the calibration curve by determining the CPM which corresponds to 2.5E-2 µCi/ml, and PDRR is set equal to 1.

CALCULATION

$$\text{RM-A1 Setpoint (CPM)} = \left[\frac{\text{Net CPM x VF}}{\text{PDRR}} \times \frac{29.9 - \text{V1}}{29.9 - \text{V6}} \times \frac{(\mu\text{Ci/cc/CPM})_{\text{A6}}}{(\mu\text{Ci/cc/CPM})_{\text{A1}}}\right] + \text{Bkg}$$

where:

Net CPM	=	The observed RM-A6 count rate, in cpm, less background, or obtained from the calibration curve.
VF	=	The vent fraction; that portion of the total plant gaseous release associated with this vent and discharge type. Value can be set to a number between 0 and 1. The summation of the vent fractions of RM-A1 and RM-A2 cannot exceed 1.
PDRR	=	The noble gas gamma emission Projected Dose Rate Ratio calculated in accordance with Section 1.3. This ratio is the actual projected dose rate divided by the allowable dose rate referenced in Section 1.3-1, relationship 1.4.
V6	=	The actual gauge vacuum reading at RM-A6 at the time of sampling.
V1	=	The actual or average gauge vacuum reading at RM-A1 during normal operation.

$(\mu Ci/cc/CPM)_{A6}$	=	µCi/cc per cpm for RM-A6. This is based on an actual sample or derived from the calibration curve.
$(\mu Ci/cc/CPM)_{A1}$	=	µCi/cc per cpm for RM-A1. This is based on an actual sample or derived from the calibration curve.
Bkg	=	RM-A1 background count rate in cpm.

Setpoint Calculation 1.4-1A
Reactor Building Purge Exhaust Duct Monitor (RM-A1)
(Special Release For Functional Testing of the Reactor Building Purge System)

INTRODUCTION

Following completion of the analyses required by Section 1.2-1 and determination of release rates and concentration limits in accordance with Section 1.3-1, the monitor setpoint requires adjustment to ensure that alarm and pathway isolation occur if nuclide concentration limits are exceeded.

METHODOLOGY

Auxiliary Building and Fuel Handling Area atmosphere is continuously passed through radiation monitor RM-A2 and the count rate is observed. The observed count rate is correlated to a corresponding count rate for RM-A1, and factors are applied to account for background radiation and the pressure difference between the detector chambers and exhaust vent. The obtained value establishes the maximum allowable setpoint. The alarm/trip setpoint is adjusted to this or a more conservative value prior to initiating the release. If the concentration of radionuclides to be released is less than the effluent monitor LLD "Net CPM" is obtained from the calibration curve by determining the CPM which corresponds to 2.5E-2 µCi/ml, and PDRR is set equal to 1.

CALCULATION

$$\text{RM-A1 Setpoint (CPM)} = \left[\frac{\text{Net CPM x VF}}{\text{PDRR}} \times \frac{29.9 - \text{V1}}{29.9 - \text{V2}} \times \frac{(\mu\text{Ci/cc/CPM})_{\text{A2}}}{(\mu\text{Ci/cc/CPM})_{\text{A1}}}\right] + \text{Bkg}$$

where:

Net CPM	=	The observed RM-A2 count rate, in cpm, less background, or obtained from the calibration curve.
VF	=	The vent fraction; that portion of the total plant gaseous release associated with this vent and discharge type. VF can be set to a value from 0 and 1. The sum of RM-A1 and RM-A2 vent fractions can not exceed 1.
PDRR	=	The noble gas gamma emission Projected Dose Rate Ratio calculated in accordance with Section 1.3. This ratio is the actual projected dose rate divided by the allowable dose rate referenced in Section 1.3-1, relationship 1.4.
V2	=	The actual gauge vacuum reading at RM-A2 at the time of sampling.
V1	=	The actual or average gauge vacuum reading at RM-A1 during normal operation.

$(\mu Ci/cc/CPM)_{A2}$	=	µCi/cc per cpm for RM-A2. This is based on an actual sample or derived from the calibration curve.
$(\mu Ci/cc/CPM)_{A1}$	=	µCi/cc per cpm for RM-A1. This is based on an actual sample or derived from the calibration curve.
Bkg	=	RM-A1 background count rate in cpm.

Setpoint Calculation 1.4-1B
Reactor Building Purge Exhaust Duct Monitor (RM-A1)
(Special Release Following ILRT of Reactor Building)

INTRODUCTION

Following completion of the analyses required by Section 1.2-1 and determination of release rates and concentration limits in accordance with Section 1.3-1, the monitor setpoint requires adjustment to ensure that alarm and pathway isolation occur if nuclide concentration limits are exceeded.

METHODOLOGY

Net CPM is obtained from the calibration curve by determining the CPM which corresponds to 2.5E-2 µCi/ml. This value is combined with the monitor background, vent fraction and projected dose rate ratio (PDRR) to arrive at the monitor setpoint. The obtained value establishes the maximum allowable setpoint. The alarm/trip setpoint is adjusted to this or a more conservative value prior to initiating the release.

Shortly, after beginning the purge, new RM-A1 alarm/trip setpoints are determined using the methodology of Setpoint Calculation 1.4-2.

CALCULATION

$$\text{RM-A1 Setpoint (CPM)} = \left[\frac{\text{Net CPM x VF}}{\text{PDRR}}\right] + \text{Bkg}$$

Net CPM	=	A value derived from RM-A1 calibration curve.
VF	=	The vent fraction; that portion of the total plant gaseous release associated with this vent and discharge type. VF can be set to a value from 0 and 1. The sum of RM-A1 and RM-A2 vent fractions can not exceed 1.
PDRR	=	1
Bkg	=	RM-A1 background count rate in cpm.

Setpoint Calculation 1.4-2
Reactor Building Purge Exhaust Duct Monitor (RM-A1)
(Continuous Type Releases)

INTRODUCTION

Following completion of the analyses required by Section 1.2-1 and determination of release rates and concentration limits in accordance with Section 1.3-1, the monitor setpoint requires adjustment to ensure that alarm and pathway isolation occur if nuclide concentration limits are exceeded.

METHODOLOGY

Reactor Building atmosphere is passing through radiation monitor RM-A1 during a continuous type release. Factors are applied to the observed count rate to account for background radiation and vent fraction. The obtained value establishes the maximum allowable setpoint. The alarm/trip setpoint is adjusted to this or a more conservative value weekly during continuous releases. If the concentration of radionuclides to be released is less than the effluent monitor LLD "Net CPM" is obtained from the calibration curve by determining the CPM which corresponds to 2.5E-2 µCi/ml, and PDRR is set equal to 1.

CALCULATION

$$\text{RM-A1 Setpoint (CPM)} = \left[\frac{\text{Net CPM x VF}}{\text{PDRR}}\right] + \text{Bkg}$$

where:

Net CPM	=	The observed RM-A1 count rate, in cpm, less background, or obtained from the calibration curve.
VF	=	The vent fraction; that portion of the total plant gaseous release associated with this vent and discharge type. Value can be set to a number between 0 and 1. The summation of the vent fractions of RM-A1 and RM-A2 cannot exceed 1.
PDRR	=	The noble gas gamma emission Projected Dose Rate Ratio calculated in accordance with Section 1.3. This ratio is the actual projected dose rate divided by the allowable dose rate referenced in Section 1.3-1, relationship 1.4.
Bkg	=	RM-A1 background count rate in cpm.

Setpoint Calculation 1.4-3
Auxiliary Building & Fuel Handling Area Exhaust Monitor (RM-A2)
(Continuous Type Releases)

INTRODUCTION

Following completion of the analyses required by Section 1.2-2 and determination of release rates and concentration limits in accordance with Section 1.3-1, the monitor setpoint requires adjustment to ensure that alarm and pathway isolation occur if nuclide concentration limits are exceeded.

METHODOLOGY

Auxiliary Building and Fuel Handling Area atmosphere is continuously passing through radiation monitor RM-A2. Factors are applied to the observed count rate to account for background radiation and vent fraction. The obtained value establishes the maximum allowable setpoint. The alarm/trip setpoint is adjusted to this or a more conservative value weekly during continuous releases. If the concentration of radionuclides to be released is less than the effluent monitor LLD "Net CPM" is obtained from the calibration curve by determining the CPM which corresponds to 8E-3 µCi/ml, and PDRR is set equal to 1.

CALCULATION

$$\text{RM-A2 Setpoint (CPM)} = \left[\frac{\text{Net CPM x VF}}{\text{PDRR}}\right] + \text{Bkg}$$

where:

Net CPM	=	The observed RM-A2 count rate, in cpm, less background, or obtained from the calibration curve.
VF	=	The vent fraction; that portion of the total plant gaseous release associated with this vent and discharge type. Value can be set to a number between 0 and 1. The summation of the vent fractions of RM-A1 and RM-A2 cannot exceed 1.
PDRR	=	The noble gas gamma emission Projected Dose Rate Ratio calculated in accordance with Section 1.3. This ratio is the actual projected dose rate divided by the allowable dose rate referenced in Section 1.3-1, relationship 1.4.
Bkg	=	RM-A2 background count rate in cpm.

Setpoint Calculation 1.4-4
Waste Gas Decay Tank Monitor (RM-A11)
(Batch Type Releases)

INTRODUCTION

Following completion of the analyses required by Section 1.2-3 and determination of release rates and concentration limits in accordance with Section 1.3-1, the monitor setpoint requires adjustment to ensure that alarm and pathway isolation occur if nuclide concentration limits are exceeded.

METHODOLOGY

Prior to initiating a Waste Gas Decay Tank release, its contents are drawn through radiation monitor RM-A11 and returned to the waste gas header. Factors are applied to the observed count rate to account for background radiation and vent fraction. The obtained value establishes the maximum allowable setpoint. The alarm/trip setpoint is adjusted to this or a more conservative value weekly during continuous releases. If the concentration of radionuclides to be released is less than the effluent monitor LLD "Net CPM" is obtained from the calibration curve by determining the CPM which corresponds to 20 µCi/ml, and PDRR is set equal to 1.

CALCULATION

$$\text{RM-A11 Setpoint (CPM)} = \left[\frac{\text{Net CPM x VF x 24.7}}{\text{PDRR x P}}\right] + \text{Bkg}$$

where:

Net CPM	=	The observed RM-A11 count rate, in cpm, less background, or obtained from the calibration curve.
VF	=	The vent fraction; that portion of the total plant gaseous release associated with this vent and discharge type. Value is equal to 0.5.
PDRR	=	The noble gas gamma emission Projected Dose Rate Ratio calculated in accordance with Section 1.3. This ratio is the actual projected dose rate divided by the allowable dose rate referenced in Section 1.3-1, relationship 1.4.
24.7	=	The maximum pressure (psia) which RM-A11 detector chamber should be subjected to. This corresponds to a flow of 15 CFM from the release line to the vent.
P	=	Pressure (psia) in RM-A11 at time of obtaining net CPM.
Bkg	=	RM-A11 background count rate in cpm.

Setpoint Calculation 1.4-5
Plant Discharge Line Monitor (RM-L2)
(Batch Type Releases)

INTRODUCTION

Following completion of the analyses required by Section 1.2-4 and determination of release rates and concentration limits in accordance with Section 1.3-2, the monitor setpoint requires adjustment to ensure that alarm and pathway isolation occur if nuclide concentration limits are exceeded.

METHODOLOGY

Evaporator Condensate Storage Tank or Laundry and Shower Sump Tank contents are circulated through radiation monitor RM-L2 and returned to the auxiliary building sump to obtain the actual count rate at RM-L2 for the concentration contained in the tank for release. The observed count rate is adjusted for release flow, background and statistical counting variations, particular to this release flow path. The resulting value is used as the alarm/trip setpoint and RM-L2 is adjusted to this or a more conservative value prior to initiating the release. If the concentration of radionuclides to be released is less than the effluent monitor LLD use setpoint calculation 1.4-8.

CALCULATION

$$\text{RM-L2 Setpoint (CPM)} = \left[\frac{\text{Net CPM x AF x (E + D)}}{\Sigma C_i/(10 \text{ x ECL}_i) \text{ x E}}\right] + \text{Bkg} + 3.3\sqrt{\text{Bkg}}$$

where:

Net CPM	=	The observed RM-L2 count rate, in cpm, less back-ground, or obtained from the calibration curve.
AF	=	Administration Factor to account for error in setpoint determination. AF = 0.8.
$\Sigma C_i/(10 \text{ x ECL}_i)$	=	The ratio of the actual gamma emitting concentrations (excluding dissolved and entrained gases) of the tank contents to be released to 10 times as listed in 10 CFR 20 the Effluent Concentration Limits (ECL).
E	=	The release flow rate of waste to be discharged in gallons per minute. A maximum flow rate of 100 gpm will be used for the Evaporator Condensate Storage Tanks and 40 gpm for the Laundry and Shower Sump Tanks.
D	=	The dilution flow from the Nuclear Services and Decay Heat Sea Water system in gallons per minute.
Bkg	=	RM-L2 background count rate in cpm.
$3.3\sqrt{\text{Bkg}}$	=	A statistical spread on the background count rate which represents a 99.95% confidence level on monitor counting. This factor is included to prevent inadvertent high/trip alarms due to random counts on the monitor.

Setpoint Calculation 1.4-6
Turbine Building Basement Discharge Line Monitor (RM-L7)
(Continuous Type Releases)

INTRODUCTION

The activity released through the Turbine Building Basement Discharge Line Monitor RM-L7 is analyzed in accordance with Section 1.2-5. The setpoint is a fixed concentration based on worst case nuclide released at the worst case rate as described in the Methodology Section below. The monitor setpoint is adjusted to ensure isolation of the release pathway if nuclide concentration limits are exceeded.

METHODOLOGY

The alarm/trip setpoint determination is based on the worst case assumption that I-131 is the only nuclide being discharged. This assumption equates all counts on RM-L7 to I-131 with an ECL of 1E-6 uci/ml. I-131 has the most conservative ECL of the nuclides available to this release path and "visible" to RM-L7. The setpoint is based on assuring 10 ECLs or less of I-131 in the discharge canal and is determined by deriving the cpm from the RM-L7 calibration curve which corresponds to a concentration of 1E-5 uci/ml and applying the flow dilution factor, background counts, and statistical counting variations. The resulting value is used as the alarm/trip setpoint and RM-L7 is adjusted to this or a more conservative value to maintain control on release conditions.

CALCULATION

$$\text{RM-L7 Setpoint (CPM)} = \left[\frac{\text{CPM x (E + D)}}{\text{E}}\right] + \text{Bkg} + 3.3\sqrt{\text{Bkg}}$$

where:

CPM	=	The counts per minute corresponding to 1E-5 uci/ml (10 ECLs I-131) from the current RM-L7 calibration curve.
E	=	The maximum release flow rate of water able to be discharged in gallons per minute.
D	=	The dilution flow from the Nuclear Services and Decay Heat Sea Water system in gallons per minute.
Bkg	=	The background count rate at RM-L7 in cpm.
$3.3\sqrt{\text{Bkg}}$	=	A statistical spread on the background count rate which represents a 99.95% confidence level on monitor counting. This factor is included to prevent inadvertent high/trip alarms due to random counts on the monitor.

Setpoint Calculation 1.4-7
Turbine Building Basement Discharge Line Monitor (RM-L7)
(Batch Type Releases)

INTRODUCTION

Following completion of the analyses required by Section 1.2-4 and determination of release rates and concentration limits in accordance with Section 1.3-2, the monitor setpoint requires adjustment to ensure that alarm and pathway isolation occur if nuclide concentration limits are exceeded.

METHODOLOGY

Station Drain Tank (SDT-1) contents are circulated through radiation monitor RM-L7 and returned to the sump to obtain the actual count rate at RM-L7 for the concentration contained in the tank for release. The observed count rate is adjusted for release flow, background and statistical counting variations, particular to this release flow path. The resulting value is used as the alarm/trip setpoint and RM-L7 is adjusted to this or a more conservative value prior to initiating the release. If the concentration of radionuclides to be released is less than the effluent monitor LLD use setpoint calculation 1.4-8.

CALCULATION

$$\text{RM-L7 Setpoint (CPM)} = \left[\frac{\text{Net CPM x AF x (E+D)}}{\left(\sum C_i/(10 \text{ x ECL}_i)\right) \text{ x E}}\right] + \text{Bkg} + 3.3\sqrt{\text{Bkg}}$$

where:

Net CPM	=	The observed RM-L7 count rate, in cpm, less background.
AF	=	Administration Factor to account for error in setpoint determination. AF = 0.8.
$\sum C_i/(10 \text{ x ECL}_i)$	=	The ratio of the actual gamma emitting concentrations (excluding dissolved and entrained gases) of the tank contents to be released to 10 times the Effluent Concentration Limits (ECL) as listed in 10 CFR 20.
E	=	The release flow rate of waste to be discharged in gallons per minute. A maximum flow rate of 600 gpm will be used.
D	=	The dilution flow from the Nuclear Services and Decay Heat Sea Water system in gallons per minute.
Bkg	=	RM-L7 background count rate in cpm.
$3.3\sqrt{\text{Bkg}}$	=	A statistical spread on the background count rate which represents a 99.95% confidence level on monitor counting. This factor is included to prevent inadvertent high/trip alarms due to random counts on the monitor.

Setpoint Calculation 1.4-8
Alternate Setpoints Methodology for RM-L2 and RM-L7

The following method may be employed to establish an upper bound fixed setpoint for RM-L7. Once established, the setpoint need not be changed unless the monitor response or background changes significantly, or there is a significant change in secondary plant activity levels.

This method may also be used to establish setpoints for laundry tanks being released through RM-L2, and for low activity (< monitor LLD) ECSTs.

$$\text{Setpoint} = [(\text{cpm}/\mu\text{Ci/ml}) \times (1\text{E-5}\ \mu\text{Ci/ml}) \times \text{DF} \times \text{RF}] + \text{Bkg}$$

where:

cpm/µCi/ml	=	The monitor response (slope)
1E-5 µCi/ml	=	Worst case effluent concentration limit, for major gamma emitting isotopes in waste stream, multiplied by 10.
DF	=	The minimum dilution factor based on maximum tank discharge rate and minimum RW dilution; 100 for ECSTs, 240 for LSSTs, 30 for SDT-1 or CD releases through RM-L7.
RF	=	Release fraction. RF is that fraction of site liquid releases allocated to a particular liquid effluent monitor. The sum of the RFs for each liquid effluent monitor must be < = 1 during periods of simultaneous releases from liquid effluent discharge points. During periods when simultaneous discharges are not made, RF may be set to 1 for each monitor.
Bkg	=	Monitor background.

CALCULATION OF INHALATION PATHWAY DOSE FACTOR (P_i)

$$P_i = K'(BR)DFA_i \quad \text{mrem/year per uCi/m}^3$$

where:

K′	=	A constant unit of conversion - 10^6 pCi/uCi
BR	=	The Breathing Rate of the child age group = 3700 m^3/year
DFA_i	=	The maximum organ inhalation dose factor for the child age group for the ith radionuclide, in mrem/pCi. The total body is considered as an organ in the selection of DFA.

NOTE: For the inhalation pathway $P_i = R_i$, so values of P_i may be taken from Table 4.4-3.

References:

1) NUREG-0133, Section 5.2.1.1
2) Regulatory Guide 1.109, Table E-5, and Table E-9

SECTION 2.0

RADIOACTIVE EFFLUENTS

DOSE REDUCTION SPECIFICATIONS

TABLE II

RADWASTE REDUCTION SYSTEMS - DOSE PROJECTION

SYSTEM	SPECIFICATION	DOSE PROJECTION CALCULATION	PROJECTION FREQUENCY	FLOW DIAGRAM
Waste Gas Treatment	2.1-1	2.2-1	M*	2.3-1
Ventilation Exhaust Treatment	2.1-1	2.2-1	M*	2.3-1
Liquid Radwaste Treatment	2.1-2	2.2-1	M*	2.3-2

* When a Radwaste Reduction System is not available for use.

WASTE REDUCTION SPECIFICATION NO. 2.1-1

The WASTE GAS SYSTEM shall be used, as required, to reduce the radioactivity of materials in gaseous waste prior to discharge, when projected monthly air doses due to releases of gaseous effluents from the site to areas at or beyond the SITE BOUNDARY would exceed:

1) 0.2 mrad gamma/month *
2) 0.4 mrad beta/month *

AND

The VENTILATION EXHAUST TREATMENT SYSTEM shall be used, as required, to reduce the quantity of radioactive materials in gaseous waste prior to discharge, when projected monthly air doses due to release of gaseous effluents from the site to areas at or beyond the SITE BOUNDARY would exceed:

1) 0.3 mrem to any organ/month *

Doses due to gaseous releases from the site shall be projected at least once per 31 days.

* The limits of the 10CFR50, Appendix I, paragraph B1 criteria were reduced to 1/4 of the monthly portion of the annual limit as explained in correspondence among AIF, Utilities and the NRC dated December 24, 1981.

References:
1) Plant Procedures
2) Correspondence C.A. Willis (NRC) to S. Pandy (Franklin Research Center) dated 11/20/81 and AIF letter to AIF subcommittee on RETS dated 12/24/81.

WASTE REDUCTION SPECIFICATION NO. 2.1-2

The LIQUID RADWASTE TREATMENT SYSTEM shall be used, as required, to reduce radioactive materials in liquid wastes prior to their discharge, when projected monthly doses due to liquid effluents discharged to UNRESTRICTED AREAS would exceed the following values:

a. 0.06 mrem whole body/month *
b. 0.2 mrem to any organ/month *

Doses due to liquid releases shall be projected at least once per 31 days.

* The limits of the 10CFR50, Appendix I, paragraph A criteria were reduced to 1/4 of the monthly portion of the annual limit as explained in correspondence among AIF, Utilities and the NRC dated 12/24/81.

References:

1) Plant Procedures
2) Correspondence C.A. Willis (NRC) to S. Pandy (Franklin Research Center) dated 11/20/81 and AIF letter to AIF subcommittee on RETS dated 12/24/81.

DOSE PROJECTION METHODOLOGY 2.2-1
GASEOUS RADWASTE

I. INTRODUCTION

Crystal River Unit 3 operating practices require use of the WASTE GAS SYSTEM (Waste Gas Decay Tanks). The normal release paths for gaseous effluents are via the VENTILATION EXHAUST TREATMENT SYSTEM (HEPA and Charcoal Filters). The operability of the VENTILATION EXHAUST TREATMENT SYSTEM is controlled by Section 2.4 of Part I of the ODCM.

As long as these practices and specifications are maintained, the radwaste reduction requirements of Part I, Section 2 are met, and there is no need to project doses prior to the release of gaseous radwaste.

II. CALCULATIONS

Dose projection calculations will be necessary if either system is not available for use.

$$D_p = 31D_c/NDQ$$

where:

D_p = Projected Dose (monthly).

D_c = Current quarter cumulative dose, including projection for release under evaluation.

NDQ = Number of days into quarter, where the quarterly periods are:

January 1 through March 31, April 1 through June 30, July 1 through September 31, October 1 through December 31.

References:

1) FSAR 5.5.1, 5.5.2

DOSE PROJECTION METHODOLOGY 2.2-2
LIQUID RADWASTE

I. INTRODUCTION

Crystal River Unit 3 operating practices require liquid radwastes (except for Laundry and Shower Sump waste and Secondary Drain Tank waste) to be processed prior to releasing them to the environment.

As long as these practices are maintained the radwaste reduction requirements of Section 2.3 of Part I of the ODCM are met, and there is no need to project doses prior to the release of liquid radwaste.

II. CALCULATIONS

Dose projection calculations will be necessary if there is a malfunction of LIQUID RADWASTE TREATEMENT SYSTEM equipment and liquid radwaste must be released without prior treatment.

$$D_p = 31D_c/NDQ$$

where:

D_p = Projected Dose (monthly).

D_c = Current quarter cumulative dose, including projection for release under evaluation.

NDQ = Number of days into quarter, where the quarterly periods are:

January 1 through March 31, April 1 through June 30, July 1 through September 31, October 1 through December 31.

References:

1) ODCM Part I, Section 2.3 and 3.3.

TOTAL DOSE SPECIFICATION 2.3
(LIQUID AND GASEOUS RELEASES)

The calendar year dose or dose commitment to any member of the public, due to releases of radioactivity and radiation from uranium fuel cycle sources shall be limited to less than or equal to 25 mrems to the whole body or any organ, (except the thyroid which shall be limited to less than or equal to 75 mrems).

This specification is satisfied by meeting specifications 4.1-1, 4.1-2, and 4.1-3.

If doses exceed twice the limits of specifications 4.1-1, 4.1-2, and 4.1-3 then an analysis shall be performed to confirm continued compliance with 40CFR190(b).

References:

1) ODCM Part I, Section 2.10
2) Plant Procedures
3) 40 CFR 190

EFFLUENT FLOW DIAGRAM - GASEOUS

2.3-1

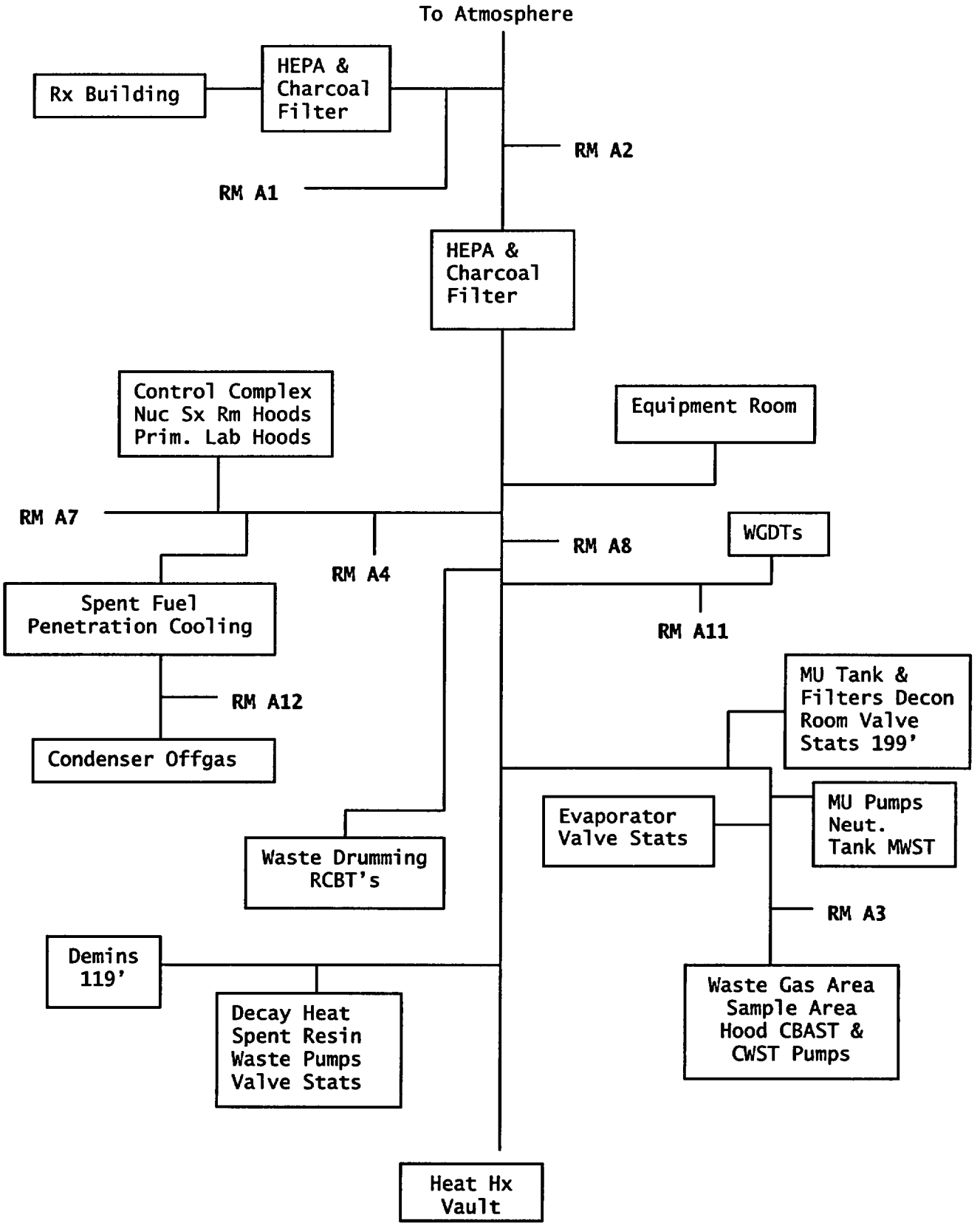

EFFLUENT FLOW DIAGRAM - LIQUID

2.3-2

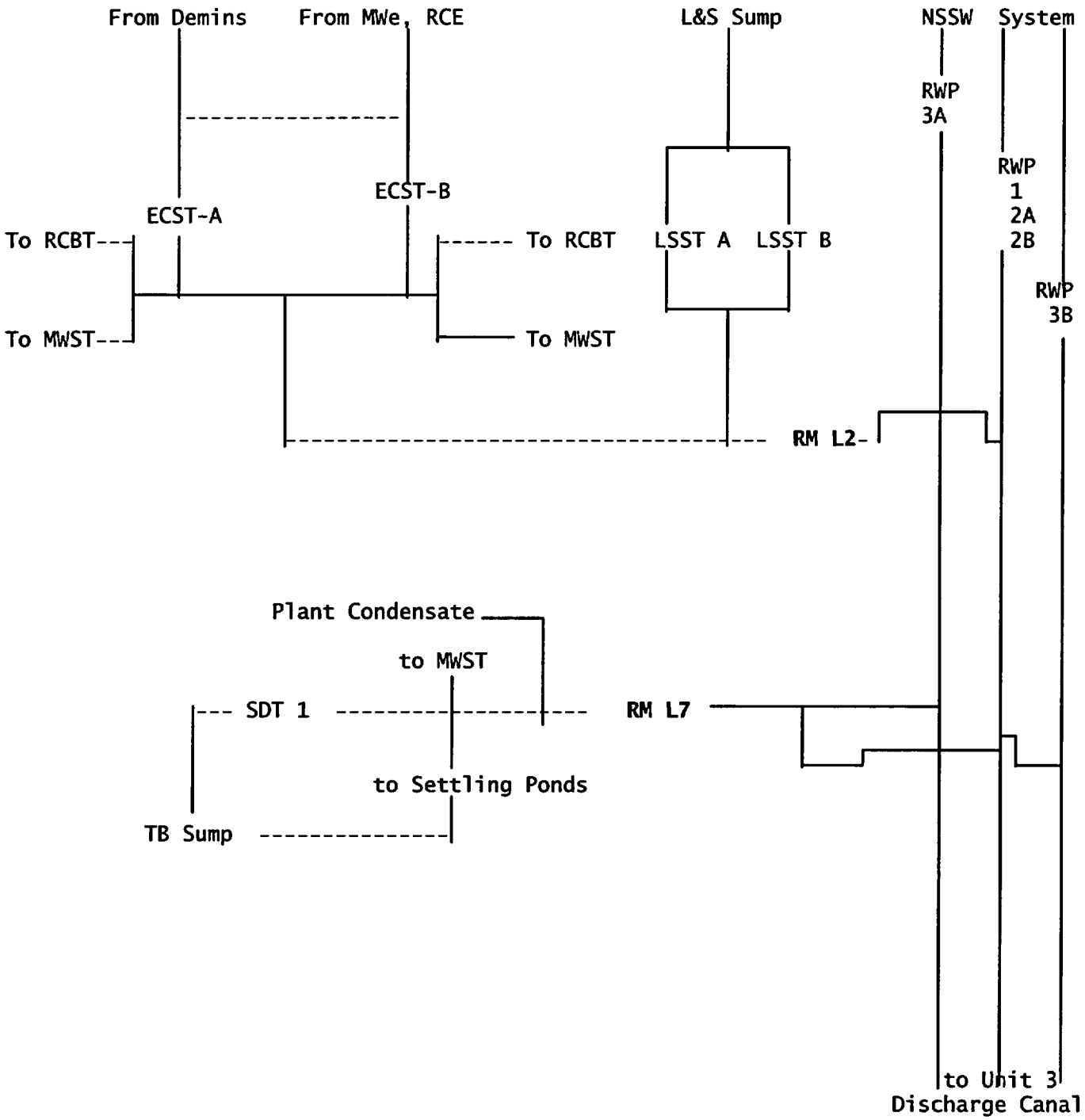

SECTION 3.0

RADIOACTIVE EFFLUENTS

SAMPLING SPECIFICATIONS

TABLE III

GASEOUS AND LIQUID EFFLUENT REPRESENTATIVE SAMPLING

SOURCE OF EFFLUENT	RELEASE TYPE		REPRESENTATIVE SAMPLING METHOD
	BATCH	CONT.	
Evaporator Condensate Storage Tanks	X		3.1-1
Laundry and Shower Sump Tanks	X		3.1-1
Secondary Drain Tanks	X	X	3.1-1, 3.1-2
Plant Condensate		X	3.1-2
Waste Gas Decay Tanks	X		3.1-3
Reactor Bldg. Purge Exhaust	X	X	3.1-4
Auxiliary Bldg. & Fuel Handling Area Purge Exhaust		X	3.1-4
Reactor Bldg. with Both Personnel and Equipment Hatches Open		X	3.1-5

Representative Sampling Method No. 3.1-1
(Evaporator Condensate Storage Tanks, Laundry & Shower Sump Tanks, Secondary Drain Tank)

To obtain representative samples from these tanks, the contents of the tank to be sampled will be recirculated through two contained volumes and a grab sample will be collected upon completion. No additions of liquid waste will be made to this tank until completion of the release.

Representative Sampling Method No. 3.1-2
(Secondary Drain Tank and/or Plant Condensate)

A representative sample may be obtained via grab sample of the Turbine Building Sump or the Secondary Drain Tank, Plant Condensate, or from the release compositor.

Representative Sampling Method No. 3.1-3
(Waste Gas Decay Tank)

Representative gas, iodine, and particulate samples are drawn from the waste gas decay tank sample lines.

No additions of waste gas is allowed into a tank following sampling until the release has been completed.

Representative Sampling Method No. 3.1-4
(Reactor Building & Auxiliary Building & Fuel Handling Area Exhaust)

Representative gas, iodine, particulate and tritium samples are taken from these ducts at the location of the radiation monitors. The sample for the Reactor Building Purge Duct is taken form radiation monitor RM-A6 prior to a purge and is drawn from radiation monitor RM-A1 during a purge. The sample for the Auxiliary Building and Fuel Handling Area Exhaust Duct is drawn from RM-A2 during venting since this is a continuous release pathway.

If samples cannot be obtained from the ducts of the Reactor or Auxiliary Building, samples can be obtained from areas of these buildings that are considered to be representative of the radionuclide concentrations present throughout the respective buildings. Sampling times and volumes should be established to assure the LLD Limits of Sections 1.2 and 4.2 for the radionuclides can be met.

Representative Sampling Method No. 3.1-5
(Reactor Building With Personnel And Equipment Hatch Opened)

The following requirements do not apply when the Personnel Hatch or Equipment Hatch is closed, or when a structure, such as a wooden door, is used in lieu of either Hatch. By having one of these hatches closed, sustained drafts through the RB are prevented.

Requirements:

The Reactor Building purge exhaust fans are operational and the supply fans are shut down. If the purge exhaust must be shut down then either the personnel hatch or equipment hatch openings must be closed.

Monitor the Reactor Building recirculation system by using RM-A6 or by taking general area air samples.

Considerations:

Run the main purge long enough to assure cleanup of the RB atmosphere.

Degas and depressurize the Reactor Coolant System.

Representative Sampling Method No. 3.1-6
(Reactor Building During Integrated Leak Rate Test)

Due to building overpressure, prepurge samples cannot be taken from RM-A6. Representative gas, iodine, particulate and tritium samples may be obtained from the Intermediate Building containment sampling apparatus or the Post-Accident Sampling System.

Reference: Telecon-FPC (Dan Green, Dan Wilder) to NRC (Charles Willis) dated 03/15/85 at 0930; Subject: Personnel and Equipment Hatch Openings.

SECTION 4.0

RADIOACTIVE EFFLUENTS

DOSE CALCULATIONAL SPECIFICATIONS

TABLE IV CUMULATIVE DOSE CALCULATION

PATHWAY	DOSE SPECIFICATION	NUCLIDE ANALYSIS	CALCULATION METHODOLOGY	DOSE FACTORS
Noble Gases	4.1-1	4.2-1, 4.2-2 4.2-3	4.3-1	4.4-1
Radioiodines, Radioactive Particulates Radionuclides other than Noble Gases	4.1-2	4.2-1, 4.2-2 4.2-3	4.3-2	4.4-2 to 4.4-16
Liquid Effluents	4.1-3	4.2-4, 4.2-5	4.3-3	4.4-17

DOSE SPECIFICATION 4.1-1
(NOBLE GASES)

The air dose at or beyond the SITE BOUNDARY due to radioactive noble gases released in gaseous effluents shall be limited as follows:

1) During any calendar quarter, $\leq$ 5 mrad gamma, and $\leq$ 10 mrad beta radiation.

2) During any calendar year, $\leq$ 10 mrad gamma, and $\leq$ 20 mrad beta radiation.

Cumulative dose contributions for the current calendar quarter and current calendar year shall be determined at least once per 31 days.

References:

1) ODCM Part I, Section 2.8

DOSE SPECIFICATION 4.1-2
(RADIOIODINE & PARTICULATES)

The dose to a MEMBER OF THE PUBLIC from I-131, I-133, Tritium and radioactive particulates with half lives of greater than 8 days in gaseous effluents released from the site to areas at or beyond the SITE BOUNDARY shall be limited as follows:

1) During any calendar quarter, $\leq$ 7.5 mrem to any organ.

2) During any calendar year, $\leq$ 15 mrem to any organ.

Cumulative dose calculations for the current calendar quarter and current calendar year shall be determined at least once per 31 days.

References:

1) ODCM Part I, Section 2.9

DOSE SPECIFICATION 4.1-3
(LIQUID EFFLUENTS)

The dose or dose commitment to a MEMBER OF THE PUBLIC from radioactive materials in liquid effluents released to UNRESTRICTED AREAS shall be limited as follows:

1) During any calendar quarter, $\leq$ 1.5 mrem total body.

2) During any calendar quarter, $\leq$ 5 mrem any organ.

3) During any calendar year, $\leq$ 3 mrem total body.

4) During any calendar year, $\leq$ 10 mrem any organ.

Cumulative dose contributions from liquid effluents shall be determined at least once per 31 days.

References:

1) ODCM Part I, Section 2.6

NUCLIDE ANALYSIS 4.2-1
REACTOR BUILDING PURGE EXHAUST

NUCLIDE	SAMPLE SOURCE	LLD[b] (uCi/ml)
A. Principal Gamma Emitters [a]		
Mn-54, Fe-59, Co-58, Co-60, Zn-65, Mo-99, Cs-134, Cs-137, Ce-141, Ce-144	Batch release particulate filter for Batch Releases. Weekly Particulate Filter Analysis for continuous(c) type release.	$1x10^{-4}/1x10^{-11}$
Kr-87, Kr-88, Xe-133, Xe-133m, Xe-135, Xe-138	Pre-release grab sample for Batch type release. Weekly grab sample for continuous type release.	$1x10^{-4}$
B. Iodine 131	Batch release charcoal filter for Batch Releases. Weekly charcoal filter for continuous releases.	$NA/1 \times 10^{-12}$
C. Tritium	Pre-release Grab Sample.	$1x10^{-6}$
D. Gross Alpha	Monthly Particulate Filter Composite	$1x10^{-11}$
E. Sr-89	Quarterly Particulate Filter Composite	$1x10^{-11}$
F. Sr-90	Quarterly Particulate Filter Composite	$1x10^{-11}$

(a) Other identified Gamma Emitters not listed in this table shall be included in dose calculations.
(b) The first value refers to the LLD for pre-release grab sample; the second value refers to the LLD for weekly Particulate Filter Analysis.
(c) Reactor Building Purge is considered continuous after minimum of one Reactor Building volumes have been released on a continuous basis (i.e., first one volume is a batch type).

NUCLIDE ANALYSIS 4.2-2
AUXILIARY BUILDING AND FUEL HANDLING AREA EXHAUST

NUCLIDE	SAMPLE SOURCE	LLD[b] (uCi/ml)
A. Principal Gamma Emitters [a]		
Mn-54, Fe-59, Co-58, Co-60, Zn-65, Mo-99, Cs-134, Cs-137, Ce-141, Ce-144	Weekly Particulate Filter Analysis.	$1x10^{-4}/1x10^{-11}$
Kr-87, Kr-88, Xe-133, Xe-133m, Xe-135, Xe-138	Monthly Grab Sample.	$1x10^{-4}$
B. Iodine 131	Weekly Charcoal Filter Analysis.	$1x10^{-12}$
C. Tritium	Monthly Grab Sample.	$1x10^{-6}$
D. Gross Alpha	Monthly Particulate Filter Composite	$1x10^{-11}$
E. Sr-89	Quarterly Particulate Filter Composite	$1x10^{-11}$
F. Sr-90	Quarterly Particulate Filter Composite	$1x10^{-11}$

(a) Other identified Gamma Emitters not listed in this table shall be included in dose calculations.
(b) The first value refers to the LLD for pre-release grab sample; the second value refers to the LLD for weekly Particulate Filter Analysis.

NUCLIDE ANALYSIS 4.2-3
WASTE GAS DECAY TANKS

NUCLIDE	SAMPLE SOURCE	LLD[b] (μCi/ml)
A. Principal Gamma Emitters [a]		
Mn-54, Fe-59, Co-58, Co-60, Zn-65, Mo-99, Cs-134, Cs-137, Ce-141	Weekly Particulate Filter sample (from RM-A2)	$1x10^{-4}/1x10^{-11}$
Ce-144, Kr-87, Kr-88, Xe-133, Xe-133m, Xe-135, Xe-138	Pre-release Grab sample	$1x10^{-4}$
B. Iodine 131	Weekly Charcoal Filter (from RM-A2)	$1x10^{-12}$

(a) Other identified Gamma Emitters not listed in this table shall be included in dose and setpoint calculations.
(b) The first value refers to the LLD for pre-release grab sample; the second value refers to the LLD for weekly Particulate Filter Analysis.

NUCLIDE ANALYSIS 4.2-4
EVAPORATOR CONDENSATE STORAGE TANKS, LAUNDRY AND SHOWER SUMP TANKS, SECONDARY DRAIN TANK

NUCLIDE	SAMPLE SOURCE	LLD(uCi/ml)
A. Principal Gamma Emitters [a]		
Mn-54, Fe-59, Co-58, Co-60, Zn-65, Mo-99, Cs-134, Cs-137, Ce-141, Ce-144	Pre-release Grab Sample	$5x10^{-7}$
B. Iodine 131	Pre-Release Grab Sample	$1x10^{-6}$
C. Dissolved and Entrained Noble Gases	Monthly Grab Sample	$1x10^{-5}$
D. Tritium	Monthly Composite	$1x10^{-5}$
E. Gross Alpha	Monthly Composite	$1x10^{-7}$
F. Sr-89	Quarterly Composite	$5x10^{-8}$
G. Sr-90	Quarterly Composite	$5x10^{-8}$
H. Fe-55	Quarterly Composite	$1x10^{-6}$

(a) Other identified Gamma Emitters not listed in this table shall be included in dose calculations.

NUCLIDE ANALYSIS 4.2-5
SECONDARY DRAIN TANK AND/OR
PLANT CONDENSATE

NUCLIDE		SAMPLE SOURCE	LLD(uCi/ml)
A.	Principal Gamma Emitters [a]		
	Mn-54 Fe-59 Co-58 Co-60 Zn-65 Mo-99 Cs-134 Cs-137 Ce-141 Ce-144	Weekly Composite	$5x10^{-7}$
B.	Iodine 131	Weekly Composite	$1x10^{-6}$
C.	Dissolved and Entrained Noble Gases	Monthly Grab Sample	$1x10^{-5}$
D.	Tritium	Monthly Composite	$1x10^{-5}$
E.	Gross Alpha	Monthly Composite	$1x10^{-7}$
F.	Sr-89	Quarterly Composite	$5x10^{-8}$
G.	Sr-90	Quarterly Composite	$5x10^{-8}$
H.	Fe-55	Quarterly Composite	$1x10^{-6}$

(a) Other identified Gamma Emitters not listed in this table shall be included in dose calculations.

DOSE CALCULATION 4.3-1
(NOBLE GAS)

The air dose at or beyond the SITE BOUNDARY due to noble gases released in gaseous effluents is calculated as follows:

$$D_\gamma = 3.17 \times 10^{-8} \Sigma M_i (X/Q) Q_i \qquad \text{mrad}$$

$$D_\beta = 3.17 \times 10^{-8} \Sigma N_i (X/Q) Q_i \qquad \text{mrad}$$

where:

D_γ	=	The air dose at or beyond the SITE BOUNDARY due to gamma emissions from noble gases in gaseous effluents in mrad/time period.
D_β	=	The air dose at or beyond the SITE BOUNDARY due to beta emissions from noble gases in gaseous effluents in mrad/time period.
3.17×10^{-8}	=	The number of years in one second, yr/sec.
M_i	=	The air dose factor due to gamma emissions for each identified noble gas radionuclide, in mrad/year per uCi/m^3.
N_i	=	The air dose factor due to beta emissions for each identified noble gas radionuclide, in mrad/year per uCi/m^3.
X/Q	=	The highest calculated annual average relative concentration for areas at or beyond the UNRESTRICTED AREA Boundary, 2.5×10^{-6}sec/m^3.
Q_i	=	Total µCi of isotope i released during the calendar quarter or calendar year, as appropriate.

DOSE CALCULATION 4.3-2
(RADIOIODINES & PARTICULATES)

The dose to an individual at or beyond the SITE BOUNDARY due to I-131, I-133, Tritium and radioactive particulates with half lives of greater than 8 days is calculated as follows:

$$D = 3.17 \times 10^{-8} \sum WR_iQ_i \qquad \text{mrem}$$

where:

D	=	The radiation dose to an individual at or beyond the UNRESTRICTED AREA BOUNDARY, in mrem.
R_i	=	The dose factor for each identified radionuclide, i, in m^2(mrem/year) per uCi/sec or mrem/year per uCi/m^3.
W	=	X/Q for inhalation pathway, 2.5×10^{-6} sec/m^3 the site boundary and 7.5×10^{-7} sec/m^3 at the critical receptor.
W	=	D/Q for food and ground plane pathway, $1.9 \times 10^{-8} m^{-2}$ the site boundary and 5.7×10^{-9} m^{-2} at the critical receptor.
Q_i	=	Total μCi of isotope i released during the calendar quarter or calendar year, as appropriate.
3.17×10^{-8}	=	The number of years in one second, yr/sec.

Reference:

NUREG 0133, Section 5.3.1
FSAR, Table 2-20

DOSE CALCULATION 4.3-3
(LIQUID EFFLUENTS)

The dose or dose commitment to a MEMBER OF THE PUBLIC from radioactive materials in liquid effluents released to UNRESTRICTED AREAS is calculated as follows:

$$D = \sum_i \left[A_{i\tau} \sum_k t_k C_{ik} F_k \right]$$

where:

D	=	The cumulative dose commitment to the total body or any organ, T, from the liquid effluents for the total time period Σt_k in mrem.
t_k	=	The length of the kth time period over which C_{ik} is averaged for all liquid releases, in hours.
C_{ik}	=	The average concentration of radionuclide, i, in undiluted liquid effluent during time period t_k from any liquid release, in µCi/ml.
$A_{i\tau}$	=	The site related ingestion dose commitment factor to the total body or any organ for each identified principal gamma and beta emitter as shown in Table 4.4-17 of this manual, in mrem-ml per hour-µCi.
F_k	=	Waste release flowrate (Waste flow rate + Dilution flow rate)*

Dilution flowrate is the sum of available circulating water and Nuclear Services and Decay Heat Seawater flow - Units 1 and 2 circulating water flow may be included.

References:

1) NUREG 0133, Section 4.3.
2) *Telecon/Meeting Summary with C. Willis (USNRC) dated 01/16/85 regarding F_k

TABLE 4.4-1

DOSE FACTORS FOR EXPOSURE TO A SEMI-INFINITE CLOUD OF NOBLE GASES

Nuclide	Ni β-Air * (DFiβ)	Li β-Skin ** (DFSi)	Mi γ-Air * (DFiγ)	Ki γ-Body ** (DFBi)
Kr-83m	2.88E+2	-----	1.93E+1	7.56E-2
KR-85m	1.97E+3	1.46E+3	1.23E+3	1.17E+3
Kr-85	1.95E+3	1.34E+3	1.72E+1	1.61E+1
Kr-87	1.03E+4	9.73E+3	6.17E+3	5.92E+3
Kr-88	2.93E+3	2.37E+3	1.52E+4	1.47E+4
Kr-89	1.06E+4	1.01E+4	1.73E+4	1.66E+4
KR-90	7.83E+3	7.29E+3	1.63E+4	1.56E+4
Xe-131m	1.11E+3	4.76E+2	1.56E+2	9.15E+1
Xe-133m	1.48E+3	9.94E+2	3.27E+2	2.51E+2
Xe-133	1.05E+3	3.06E+2	3.53E+2	2.94E+2
Xe-135m	7.39E+2	7.11E+2	3.36E+3	3.12E+3
Xe-135	2.46E+3	1.86E+3	1.92E+3	1.81E+3
Xe-137	1.27E+4	1.22E+4	1.51E+3	1.42E+3
Xe-138	4.75E+3	4.13E+3	9.21E+3	8.83E+3
Ar-41	3.28E+3	2.69E+3	9.30E+3	8.84E+3

* $\frac{\text{mrad-m}^3}{\mu\text{ci-yr}}$

** $\frac{\text{mrem-m}^3}{\mu\text{Ci-yr}}$

References:

1) NUREG 0133
2) USNRC Regulatory Guide 1.109, Table B-1

CALCULATION OF INHALATION PATHWAY DOSE FACTOR (R_i)

$$R_i = K'(BR)DFA_i \quad \text{mrem/year per uCi/m}^3$$

where:

K′	=	A constant unit of conversion - 10^6 pCi/uCi
BR	=	The Breathing Rate of the represented age group:

1400 m^3/yr - infant
3700 m^3/yr - child
8000 m^3/yr - teen
8000 m^3/yr - adult

DFA_i	=	The maximum organ inhalation dose factor for the represented age group for the ith radionuclide, in mrem/pCi.

References:

1) NUREG-0133, Section 5.3.1.1
2) Regulatory Guide 1.109, Table E-5, and Tables E-7 through E-10

TABLE 4.4-2

Inhalation Dose Factors - Infant

Nuclide	Bone	Liver	T. Body	Thyroid	Kidney	Lung	GI-LLI
H-3	6.47E2	6.47E2	6.47E2	6.47E2	6.47E2	6.47E2	6.47E2
Cr-51	ND	ND	8.95E1	1.32E1	1.32E1	1.28E4	3.57E2
Mn-54	ND	2.53E4	4.98E3	4.98E3	4.98E3	9.95E5	7.06E3
Fe-55	1.97E4	1.17E4	3.33E3	ND	ND	8.69E4	1.09E3
Fe-59	1.36E4	2.35E4	9.48E3	ND	ND	1.02E6	2.48E4
Co-58	ND	1.22E3	1.82E3	ND	ND	7.77E5	1.11E4
Co-60	ND	8.02E3	1.18E4	ND	ND	4.51E6	3.19E4
Ni-63	3.39E5	2.04E4	1.16E4	ND	ND	2.09E5	2.42E3
Zn-65	1.93E4	6.26E4	3.11E4	ND	3.25E4	6.47E5	5.14E4
Rb-86	ND	1.90E5	8.82E4	ND	ND	ND	3.04E3
Sr-89	3.98E5	ND	1.14E4	ND	ND	2.03E6	6.40E4
Sr-90	4.09E7	ND	2.59E6	ND	ND	1.12E7	1.31E5
Y-91	5.88E5	ND	1.57E4	ND	ND	2.45E6	7.07E4
Zr-95	1.15E5	2.79E4	2.03E4	ND	3.11E4	1.75E6	2.17E4
Nb-95	1.57E4	6.43E3	3.78E3	ND	4.72E3	4.79E5	1.27E4
Ru-103	2.02E3	ND	6.79E2	ND	4.24E3	5.52E5	1.61E4
Ru-106	8.68E4	ND	1.09E4	ND	1.07E5	1.16E7	1.64E5
Ag-110m	9.98E3	7.22E3	5.00E3	ND	1.09E4	3.67E6	3.30E4
Te-125m	4.76E3	1.99E3	6.58E2	1.62E3	ND	4.47E5	1.29E4
Te-127m	1.67E4	6.90E3	2.07E3	4.87E3	3.75E4	1.31E6	2.73E4
Te-129m	1.41E4	6.09E3	2.23E3	5.47E3	3.18E4	1.68E6	6.90E4
I-131	3.79E4	4.44E4	1.96E4	1.48E7	5.18E4	ND	1.06E3
Cs-134	3.96E5	7.03E5	7.45E4	ND	1.90E5	7.97E4	1.33E3
Cs-136	4.83E4	1.35E5	5.29E4	ND	5.64E4	1.18E4	1.43E3
Cs-137	5.49E5	6.12E5	4.55E4	ND	1.72E5	7.13E4	1.33E3
Ba-140	5.60E4	5.60E1	2.90E3	ND	1.34E1	1.60E6	3.84E4
Ce-141	2.77E4	1.67E4	1.99E3	ND	5.25E3	5.17E5	2.16E4
Ce-144	3.19E6	1.21E6	1.76E5	ND	5.38E5	9.84E6	1.48E5
Pr-143	1.40E4	5.24E3	6.99E2	ND	1.97E3	4.33E5	3.72E4
Nd-147	7.94E3	8.13E3	5.00E2	ND	3.15E3	3.22E5	3.12E4

TABLE 4.4-3

Inhalation Dose Factors - Child

Nuclide	Bone	Liver	T. Body	Thyroid	Kidney	Lung	GI-LLI
H-3	1.12E3	1.12E3	1.12E3	1.12E3	1.12E3	1.12E3	1.12E3
Cr-51	ND	ND	1.54E2	8.55E1	2.43E1	1.70E4	1.08E3
Mn-54	ND	4.29E4	9.51E3	ND	1.00E4	1.58E6	2.29E4
Fe-55	4.74E4	2.52E4	7.77E3	ND	ND	1.11E5	2.87E3
Fe-59	2.07E4	3.34E4	1.67E4	ND	ND	1.27E6	7.07E4
Co-58	ND	1.77E3	3.16E3	ND	ND	1.11E6	3.44E4
Co-60	ND	1.31E4	2.26E4	ND	ND	7.07E6	9.62E4
Ni-63	8.21E5	4.63E4	2.80E4	ND	ND	2.75E5	6.33E3
Zn-65	4.26E4	1.13E5	7.03E4	ND	7.14E4	9.95E5	1.63E4
Rb-86	ND	1.98E5	1.14E5	ND	ND	ND	7.99E3
Sr-89	5.99E5	ND	1.72E4	ND	ND	2.16E6	1.67E5
Sr-90	1.01E8	ND	6.44E6	ND	ND	1.48E7	3.43E5
Y-91	9.14E5	ND	2.44E4	ND	ND	2.63E6	1.84E5
Zr-95	1.90E5	4.18E4	3.70E4	ND	5.96E4	2.23E6	6.11E4
Nb-95	2.35E4	9.18E3	6.55E3	ND	8.62E3	6.14E5	3.70E4
Ru-103	2.79E3	ND	1.07E3	ND	7.03E3	6.62E5	4.48E4
Ru-106	1.36E5	ND	1.69E4	ND	1.84E5	1.43E7	4.29E5
Ag-110m	1.69E4	1.14E4	9.14E3	ND	2.12E4	5.48E6	1.00E5
Te-125m	6.73E3	2.33E3	9.14E2	1.92E3	ND	4.77E5	3.38E4
Te-127m	2.49E4	8.55E3	3.02E3	6.07E3	6.36E4	1.48E6	7.14E4
Te-129m	1.92E4	6.85E3	3.04E3	6.33E3	5.03E4	1.76E6	1.82E5
I-131	4.81E4	4.81E4	2.73E4	1.62E7	7.88E4	ND	2.84E3
Cs-134	6.51E5	1.01E6	2.25E5	ND	3.30E5	1.21E5	3.85E3
Cs-136	6.51E4	1.71E5	1.16E5	ND	9.55E4	1.45E4	4.18E3
Cs-137	9.07E5	8.25E5	1.28E5	ND	2.82E5	1.04E5	3.62E3
Ba-140	7.40E4	6.48E1	4.33E3	ND	2.11E1	1.74E6	1.02E5
Ce-141	3.92E4	1.95E4	2.90E3	ND	8.55E3	5.44E5	5.66E4
Ce-144	6.77E6	2.12E6	3.61E5	ND	1.17E6	1.20E7	3.89E5
Pr-143	1.85E4	5.55E3	9.14E2	ND	3.00E3	4.33E5	9.73E4
Nd-147	1.08E4	8.73E3	6.81E2	ND	4.81E3	3.28E5	8.21E4

TABLE 4.4-4

Inhalation Dose Factors - Teen

Nuclide	Bone	Liver	T. Body	Thyroid	Kidney	Lung	GI-LLI
H-3	1.27E3	1.27E3	1.27E3	1.27E3	1.27E3	1.27E3	1.27E3
Cr-51	ND	ND	1.35E2	7.49E1	3.07E1	2.09E4	3.00E3
Mn-54	ND	1.70E0	8.40E3	ND	1.27E4	1.98E6	6.68E4
Fe-55	3.34E4	2.38E4	5.54E3	ND	ND	1.24E5	6.39E3
Fe-59	1.59E4	3.70E4	1.43E4	ND	ND	1.53E6	1.78E5
Co-58	ND	2.07E3	2.78E3	ND	ND	1.34E6	9.52E4
Co-60	ND	1.51E4	1.98E4	ND	ND	8.72E6	2.59E5
Ni-63	5.80E5	4.34E4	1.98E4	ND	ND	3.07E5	1.42E4
Zn-65	3.86E4	1.34E5	6.24E4	ND	8.64E4	1.24E6	4.66E4
Rb-86	ND	1.90E5	8.40E4	ND	ND	ND	1.77E4
Sr-89	4.34E5	ND	1.25E4	ND	ND	2.42E6	3.71E5
Sr-90	1.08E8	ND	6.68E6	ND	ND	1.65E7	7.65E5
Y-91	6.61E5	ND	1.77E4	ND	ND	2.94E6	4.09E5
Zr-95	1.48E5	4.58E4	3.15E4	ND	6.74E4	2.69E6	1.49E5
Nb-95	1.86E4	1.03E4	5.66E3	ND	1.00E4	7.51E5	9.68E4
Ru-103	2.10E3	ND	8.96E3	ND	7.43E3	7.83E5	1.09E5
Ru-106	9.84E4	ND	1.24E4	ND	1.90E5	1.61E7	9.60E5
Ag-110m	1.38E4	1.31E4	7.99E3	ND	2.50E4	6.75E6	2.73E5
Te-125m	4.88E3	2.24E3	6.67E2	1.40E3	ND	5.36E5	7.50E4
Te-127m	1.80E4	8.16E3	2.18E3	4.38E3	6.54E4	1.66E6	1.59E5
Te-129m	1.39E4	6.58E3	2.25E3	4.58E3	5.19E4	1.98E6	4.05E5
I-131	3.54E4	4.91E4	2.64E4	1.46E7	8.40E4	ND	6.49E3
Cs-134	5.02E5	1.13E6	5.49E5	ND	3.75E5	1.46E5	9.76E3
Cs-136	5.15E4	1.94E5	1.37E5	ND	1.10E5	1.78E4	1.09E4
Cs-137	6.70E5	8.48E5	3.11E5	ND	3.04E5	1.21E5	8.48E3
Ba-140	5.47E4	6.70E1	3.52E3	ND	2.28E1	2.03E6	2.29E5
Ce-141	2.84E4	1.90E4	2.17E3	ND	8.88E3	6.14E5	1.26E5
Ce-144	4.89E6	2.02E6	2.62E5	ND	1.21E6	1.34E7	8.64E5
Pr-143	1.34E4	5.31E3	6.62E2	ND	3.09E3	4.83E5	2.14E5
Nd-147	7.86E3	8.56E3	5.13E2	ND	5.02E3	3.72E5	1.82E5

TABLE 4.4-5

Inhalation Dose Factors - Adult

Nuclide	Bone	Liver	T. Body	Thyroid	Kidney	Lung	GI-LLI
H-3	1.26E3	1.26E3	1.26E3	1.26E3	1.26E3	1.26E3	1.26E3
Cr-51	ND	ND	1.00E2	5.95E1	2.28E1	1.44E4	3.32E3
Mn-54	ND	3.96E4	6.30E3	ND	9.84E3	1.40E6	7.74E4
Fe-55	2.46E4	1.70E4	3.94E3	ND	ND	7.21E4	6.03E3
Fe-59	1.18E4	2.78E4	1.06E4	ND	ND	1.02E6	1.88E5
Co-58	ND	1.58E3	2.07E3	ND	ND	9.28E5	1.06E5
Co-60	ND	1.15E4	1.48E4	ND	ND	5.97E6	2.85E5
Ni-63	4.32E5	3.14E4	1.45E4	ND	ND	1.78E5	1.34E4
Zn-65	3.24E4	1.03E5	4.66E4	ND	6.90E4	8.64E5	5.34E4
Rb-86	ND	1.35E5	5.90E4	ND	ND	ND	1.66E4
Sr-89	3.04E5	ND	8.72E3	ND	ND	1.4E6	3.5E5
Sr-90	9.92E7	ND	6.10E6	ND	ND	9.60E6	7.22E5
Y-91	4.62E5	ND	1.24E4	ND	ND	1.70E6	3.85E5
Zr-95	1.07E5	3.44E4	2.33E4	ND	5.36E4	1.77E6	1.50E5
Nb-95	1.41E4	7.76E3	4.21E3	ND	7.74E3	5.05E5	1.04E5
Ru-103	1.53E3	ND	6.58E2	ND	5.83E3	5.05E5	1.10E5
Ru-106	6.91E4	ND	8.72E3	ND	1.34E5	9.36E6	9.12E5
Ag-110m	1.08E4	1.00E4	5.94E3	ND	1.97E4	4.63E6	3.02E5
Te-125m	3.42E3	1.58E3	4.67E2	1.05E3	1.24E4	3.14E5	7.06E4
Te-127m	1.26E4	5.77E3	1.57E3	3.29E3	4.58E4	9.60E5	1.50E6
Te-129m	9.76E3	4.67E3	1.58E3	3.44E3	3.66E4	1.16E6	3.83E5
I-131	2.52E4	3.58E4	2.05E4	1.19E7	6.13E4	ND	6.28E3
Cs-134	3.73E5	8.48E5	7.28E5	ND	2.87E5	9.76E4	1.04E4
Cs-136	3.90E4	1.46E5	1.10E5	ND	8.56E4	1.20E4	1.17E4
Cs-137	4.78E5	6.21E5	4.28E5	ND	2.22E5	7.52E4	8.40E3
Ba-140	3.90E4	4.90E1	2.57E3	ND	1.67E1	1.27E6	2.18E5
Ce-141	1.99E4	1.35E4	1.53E3	ND	6.26E3	3.62E5	1.20E5
Ce-144	3.43E6	1.43E6	1.84E5	ND	8.48E5	7.78E6	8.16E5
Pr-143	9.36E3	3.75E3	4.64E2	ND	2.16E3	2.81E5	2.00E5
Nd-147	5.27E3	6.10E3	3.65E2	ND	3.56E3	2.21E5	1.73E5

Calculation of Ingestion Dose Factor
Grass-Cow-Milk Pathway

$$R_i^c[D/Q] = K'\left[\frac{Q_F(U_{ap})}{\lambda_i + \lambda_w}\right]F_m(r)(DFL_i)_a\left[\frac{f_p f_s}{Y_p} + \frac{(1 - f_p f_s)e^{-\lambda_i t_h}}{Y_s}\right]e^{-\lambda_i t_h}$$

where: Unit = $m^2 \cdot$mrem/yr per µCi/sec — Reference Table R.G. 1.109

K'	=	A constant of unit conversion, 10^6 pCi/Ci.	
Q_F	=	The cow's consumption rate, 50 kg/day (wet weight)	E-3
U_{ap}	=	The receptor's milk consumption rate for age (a), in liters, yr Infant & Child - 330 Teen - 400 Adult - 310	E-5
Y_s	=	The agricultural productivity by unit area of pasture feed grass 0.7 kg/m^2	E-15
Y_s	=	The agricultural productivity of unit area of stored feed 2.0 kg/m^2	E-15
F_m	=	The stable element transfer coefficients, in days/kg.	E-1
r	=	Fraction of deposited activity retained on cow's feed grass 1.0 radioiodine 0.2 particulates	E-15
t_f	=	Transport time from pasture to receptor, in sec. 1.73×10^5 sec (2 days)	E-15
t_h	=	Transport time from crop field to receptor, in sec. 7.78×10^6 sec. (90 days)	E-15
$(DFL_i)_a$	=	The maximum organ ingestion dose factor for the ith radionuclide for the receptor in age group (a), in mrem/pCi	E-11 to E-14
λ_i	=	The decay constant for the ith radionuclide, in sec^{-1}	
λ_w	=	The decay constant for removal of activity on leaf and plant surfaces by weathering 5.73×10^{-7} sec^{-1} (corresponding to a 14 day half-life).	E-15
f_p	=	Fraction of the year that the cow is on pasture (dimensionless) = 1*.	----
f_s	=	Fraction of the cow feed that is pasture grass while the cow is on pasture (dimensionless) = 1*.	----

*Milk cattle are considered to be fed from two potential sources, pasture grass and stored feeds.

Note: The above equation does <u>not</u> apply to the concentration of tritium in meat. A separate equation is provided in NUREG 0133, section 5.3.1.4 to determine Tritium value.

Reference: The equation for R^c_i (D/Q) was taken from NUREG-0133 Section 5.3.1.3

TABLE 4.4-6

Ingestion Dose Factors

Grass-Cow-Milk Pathway (Infant)

Nuclide	Bone	Liver	T. Body	Thyroid	Kidney	Lung	GI-LLI
H-3	2.38E3	2.38E3	2.38E3	2.38E3	2.38E3	2.38E3	2.38E3
Cr-51	ND	ND	1.61E5	1.05E5	2.30E4	2.05E5	4.71E6
Mn-54	ND	3.89E7	8.83E6	ND	8.63E6	ND	1.43E7
Fe-55	1.35E8	8.72E7	2.33E7	ND	ND	4.26E7	1.11E7
Fe-59	2.26E8	3.94E8	1.55E8	ND	ND	1.17E8	1.88E8
Co-58	ND	2.43E7	6.06E7	ND	ND	ND	6.05E7
Co-60	ND	8.81E7	2.08E8	ND	ND	ND	2.10E8
Ni-63	3.49E10	2.16E9	1.21E9	ND	ND	ND	1.07E8
Zn-65	5.55E9	1.90E10	8.78E9	ND	9.24E9	ND	1.61E10
Rb-86	ND	2.23E10	1.10E10	ND	ND	ND	5.70E8
Sr-89	ND	1.45E6	9.98E5	ND	ND	ND	4.93E5
Sr-90	1.22E11	ND	3.10E10	ND	ND	ND	1.52E9
Y-91	7.33E4	ND	1.95E3	ND	ND	ND	5.26E6
Zr-95	6.84E3	1.67E3	1.18E3	ND	1.80E3	ND	8.30E5
Nb-95	5.93E5	2.44E5	1.41E5	ND	1.75E5	ND	2.06E8
Ru-103	8.68E3	ND	2.90E3	ND	1.81E4	ND	1.06E5
Ru-106	1.90E5	ND	2.38E4	ND	2.25E5	ND	1.44E6
Ag-110m	3.86E8	2.82E8	1.87E8	ND	4.03E8	ND	1.46E10
Te-125m	1.51E8	5.04E7	2.04E7	5.07E7	ND	ND	7.18E7
Te-127m	4.21E8	1.40E8	5.10E7	1.22E8	1.04E9	ND	1.70E8
Te-129m	5.60E8	1.92E8	8.62E7	2.15E8	1.40E9	ND	3.34E8
I-131	2.72E9	3.21E9	1.41E9	1.05E12	3.75E9	ND	1.15E8
Cs-134	3.65E10	6.80E10	6.87E9	ND	1.75E10	7.18E9	1.85E8
Cs-136	2.03E9	5.96E9	2.22E9	ND	2.37E9	4.85E8	9.05E7
Cs-137	5.15E10	6.02E10	4.27E9	ND	1.62E10	6.55E9	1.88E8
Ba-140	2.41E8	2.41E5	1.24E7	ND	5.73E4	1.48E5	5.92E7
Ce-141	4.34E4	2.64E4	3.11E3	ND	8.16E3	ND	1.37E7
Ce-144	2.33E6	9.52E5	1.30E5	ND	3.85E5	ND	1.33E8
Pr-143	1.49E3	5.56E2	7.37E1	ND	2.07E2	ND	7.85E5
Nd-147	8.86E2	9.10E2	5.57E1	ND	3.51E2	ND	5.77E5

TABLE 4.4-7

Ingestion Dose Factors

Grass-Cow-Milk Pathway (Child)

Nuclide	Bone	Liver	T. Body	Thyroid	Kidney	Lung	GI-LLI
H-3	1.57E3	1.57E3	1.57E3	1.57E3	1.57E3	1.57E3	1.57E3
Cr-51	ND	ND	1.02E5	5.66E4	1.55E4	1.03E5	5.41E6
Mn-54	ND	2.09E7	5.58E6	ND	5.87E6	ND	1.76E7
Fe-55	1.12E8	5.93E7	1.84E7	ND	ND	3.35E7	1.10E7
Fe-59	1.21E8	1.96E8	9.75E7	ND	ND	5.67E7	2.04E8
Co-58	ND	1.21E7	3.72E7	ND	ND	ND	7.08E7
Co-60	ND	4.32E7	1.27E8	ND	ND	ND	2.39E8
Ni-63	2.96E10	1.59E9	1.01E9	ND	ND	ND	1.07E8
Zn-65	4.13E9	1.10E10	6.85E9	ND	6.94E9	ND	1.93E9
Rb-86	ND	8.77E9	5.39E9	ND	ND	ND	5.64E8
Sr-89	6.69E9	ND	1.91E8	ND	ND	ND	2.59E8
Sr-90	1.12E11	ND	2.83E10	ND	ND	ND	1.50E9
Y-91	3.91E4	ND	1.04E3	ND	ND	ND	5.21E6
Zr-95	3.85E3	8.46E2	7.53E2	ND	1.21E3	ND	8.83E5
Nb-95	3.18E5	1.24E5	8.84E4	ND	1.16E5	ND	2.29E8
Ru-103	4.29E3	ND	1.65E3	ND	1.08E4	ND	1.11E5
Ru-106	9.24E4	ND	1.15E4	ND	1.25E5	ND	1.44E6
Pg-110m	2.09E8	1.41E8	1.13E8	ND	2.63E8	ND	1.68E10
Te-125m	7.38E7	2.00E7	9.84E6	2.07E7	ND	ND	7.12E7
Te-127m	2.08E8	5.60E7	2.47E7	4.97E7	5.93E8	ND	1.68E8
Te-129m	3.17E8	8.85E7	4.92E7	1.02E8	9.31E8	ND	3.87E8
I-131	1.30E9	1.31E9	7.46E8	4.34E11	2.15E9	ND	1.17E8
Cs-134	2.26E10	3.71E10	7.84E9	ND	1.15E10	4.13E9	2.00E8
Cs-136	1.04E9	2.85E9	1.84E9	ND	1.52E9	2.26E8	1.00E8
Cs-137	3.22E10	3.09E10	4.55E9	ND	1.01E10	3.62E9	1.93E8
Ba-140	1.17E8	1.03E5	6.84E6	ND	3.34E4	6.12E4	5.94E7
Ce-141	2.19E4	1.09E4	1.62E3	ND	4.78E3	ND	1.36E7
Ce-144	1.62E6	5.09E5	8.66E4	ND	2.82E5	ND	1.33E8
Pr-143	7.19E2	2.16E2	3.57E1	ND	1.17E2	ND	7.76E5
Nd-147	4.47E2	3.62E2	2.80E1	ND	1.99E2	ND	5.73E5

TABLE 4.4-8

Ingestion Dose Factors

Grass-Cow-Milk Pathway (Teen)

Nuclide	Bone	Liver	T. Body	Thyroid	Kidney	Lung	GI-LLI
H-3	9.94E2	9.94E2	9.94E2	9.94E2	9.94E2	9.94E2	9.94E2
Cr-51	ND	ND	5.00E4	2.78E4	1.09E4	7.13E4	8.40E6
Mn-54	ND	1.40E7	2.78E6	ND	4.18E6	ND	2.87E7
Fe-55	4.45E7	3.16E7	7.36E6	ND	ND	2.00E7	1.37E7
Fe-59	5.21E7	1.22E8	4.70E7	ND	ND	3.87E7	2.88E8
Co-58	ND	7.95E6	1.83E7	ND	ND	ND	1.10E8
Co-60	ND	1.64E6	3.70E6	ND	ND	ND	3.14E7
Ni-63	1.82E10	8.35E8	4.01E8	ND	ND	ND	1.33E8
Zn-65	2.11E9	7.32E9	3.41E9	ND	4.68E9	ND	3.10E9
Rb-86	ND	4.73E9	2.22E9	ND	ND	ND	6.99E8
Sr-89	2.70E9	ND	7.73E7	ND	ND	ND	3.22E8
Sr-90	6.61E10	ND	1.63E10	ND	ND	ND	1.86E9
Y-91	1.58E4	ND	4.24E2	ND	ND	ND	6.48E6
Zr-95	1.66E3	5.22E2	3.59E2	ND	7.68E2	ND	1.21E6
Nb-95	1.41E5	7.80E4	4.29E4	ND	7.56E4	ND	3.34E8
Ru-103	1.81E3	ND	7.74E2	ND	6.39E3	ND	1.51E5
Ru-106	3.75E4	ND	4.73E3	ND	7.24E4	ND	1.80E6
Ag-110m	9.64E7	9.12E7	5.55E7	ND	1.74E8	ND	2.56E10
Te-125m	3.00E7	1.08E7	4.02E6	8.39E6	ND	ND	8.86E7
Te-127m	8.44E7	2.99E7	1.00E7	2.01E7	3.42E8	ND	2.10E8
Te-129m	1.11E8	4.11E7	1.75E7	3.57E7	4.63E8	ND	4.16E8
I-131	5.38E8	7.53E8	4.05E8	2.20E11	1.30E9	ND	1.49E8
Cs-134	9.81E9	2.31E10	1.07E10	ND	7.34E9	2.80E9	2.87E8
Cs-136	4.59E8	1.80E9	1.21E9	ND	9.82E8	1.55E8	1.45E8
Cs-137	1.34E10	1.78E10	6.20E9	ND	6.06E9	2.35E9	2.53E8
Ba-140	4.87E7	5.96E4	3.14E6	ND	2.02E4	4.01E4	7.51E7
Ce-141	8.89E3	5.93E3	6.81E2	ND	2.79E3	ND	1.70E7
Ce-144	6.58E5	2.72E5	3.54E4	ND	1.63E5	ND	1.65E8
Pr-143	2.89E2	1.15E2	1.44E1	ND	6.73E1	ND	9.53E5
Nd-147	1.82E2	1.98E2	1.19E1	ND	1.16E2	ND	7.15E5

TABLE 4.4-9

Ingestion Dose Factors

Grass-Cow-Milk Pathway (Adult)

Nuclide	Bone	Liver	T. Body	Thyroid	Kidney	Lung	GI-LLI
H-3	2.63E2	7.63E2	7.63E2	7.63E2	7.63E2	7.63E2	7.63E2
Cr-51	ND	ND	2.86E4	1.71E4	6.27E3	3.80E4	7.20E6
Mn-54	ND	8.40E6	1.60E6	ND	2.50E6	ND	2.57E7
Fe-55	2.51E7	1.73E7	4.04E6	ND	ND	9.67E6	9.95E6
Fe-59	2.99E7	7.02E7	2.69E7	ND	ND	1.96E7	2.34E8
Co-58	ND	4.72E6	1.06E7	ND	ND	ND	9.51E7
Co-60	ND	1.64E7	3.62E7	ND	ND	ND	3.08E8
Ni-63	6.73E9	4.66E8	2.27E8	ND	ND	ND	9.73E7
Zn-65	1.37E9	4.37E9	1.97E9	ND	2.92E9	ND	2.75E9
Rb-86	ND	2.59E9	1.21E9	ND	ND	ND	5.11E8
Sr-89	1.47E9	ND	4.21E7	ND	ND	ND	2.35E8
Sr-90	4.69E10	ND	1.15E10	ND	ND	ND	1.35E9
Y-91	8.60E3	ND	2.29E2	ND	ND	ND	4.73E6
Zr-95	1.06E3	3.04E2	2.06E2	ND	4.77E2	ND	9.63E5
Nb-95	5.65E5	2.44E5	9.59E3	ND	2.43E5	ND	1.95E9
Ru-103	1.02E3	ND	4.39E2	ND	3.89E3	ND	1.19E5
Ru-106	2.04E4	ND	2.58E3	ND	3.94E4	ND	1.32E6
Ag-110m	5.83E7	5.39E7	3.20E7	ND	1.06E8	ND	2.20E10
Te-125m	1.63E7	5.90E6	2.18E6	4.90E6	6.63E7	ND	6.50E7
Te-127m	4.58E7	1.64E7	5.58E6	1.17E7	1.86E8	ND	1.54E8
Te-129m	6.05E7	2.26E7	9.58E6	2.08E7	2.53E8	ND	3.05E8
I-131	2.97E8	4.24E8	2.43E8	1.39E11	7.27E8	ND	1.12E8
Cs-134	5.65E9	1.34E10	1.10E10	ND	4.33E9	1.44E9	2.35E8
Cs-136	2.69E8	1.06E9	7.65E8	ND	5.92E8	8.11E7	1.21E8
Cs-137	7.38E9	1.01E10	6.61E9	ND	3.43E9	1.14E9	1.95E8
Ba-140	2.70E7	3.39E4	1.77E6	ND	1.15E4	1.94E4	5.55E7
Ce-141	4.85E3	3.28E3	3.72E2	ND	1.52E3	ND	1.25E7
Ce-144	3.58E5	1.50E5	1.92E4	ND	8.87E4	ND	1.21E8
Pr-143	1.94E2	7.79E1	9.62E0	ND	4.49E1	ND	8.50E5
Nd-147	9.49E1	1.10E2	6.56E0	ND	6.41E1	ND	5.26E5

Calculation of Ingestion Dose Factor
Grass-Cow-Meat Pathway

$$R_i^m[D/Q] = K'\left[\frac{Q_F[U_{ap}]}{\lambda_i + \lambda_w}\right]F_f(r)(DFL_i)_a\left[\frac{f_p f_s}{Y_p}\right] + \left[\frac{(1 - f_p f_s)e^{-\lambda_i t_h}}{Y_s}\right]e^{-\lambda_i t_f}$$

where: Unit = $m^2 \cdot$mrem/yr per µCi/sec — Reference Table R.G. 1.109

K'	=	A constant of unit conversion 10^6 pCi/uCi.	
Q_F	=	The cow's consumption rate, 50 kg/day (wet weight)	E-3
U_{ap}	=	The receptor's meat consumption rate for age (a), in kg/yr Infant - 0 Teen - 65 Child - 41 Adult -110	E-5
Y_p	=	The agricultural productivity by unit area of pasture feed grass 0.7 kg/m^2	E-15
Y_s	=	The agricultural productivity of unit area of stored feed 2.0 kg/m^2	E-15
F_f	=	The stable element transfer coefficients, in days/kg.	E-1
r	=	Fraction of deposited activity retained on cow's feed grass 1.0 radioiodine 0.2 particulates	E-15
t_f	=	Transport time from pasture to receptor, in sec. 1.73×10^6 sec (20 days)	E-15
t_h	=	Transport time from crop field to receptor, in sec. 7.78×10^6 sec. (90 days)	E-15
$(DFL_i)_a$	=	The maximum organ ingestion dose factor for the ith radionuclide for the receptor in age group (a), in mrem/pCi	E-11 to E-14
λ_i	=	The decay constant for the ith radionuclide, in sec^{-1}	----
λ_w	=	The decay constant for removal of activity on leaf and plant surfaces by weathering, 5.73×10^{-7} sec^{-1} (corresponding to a 14 day half-life).	E-15
f_p	=	Fraction of the year that the cow is on pasture (dimensionless) = 1*.	----
f_s	=	Fraction of the cow feed that is pasture grass while the cow is on pasture (dimensionless) = 1.	----

*Milk cattle are considered to be fed from two potential sources, pasture grass and stored feeds. Following the development in Regulatory Guide 1.109, the values of f_p and f_s will be considered unity, in lieu of site specific information provided in the annual land census report by the licensee.

Note: The above equation does <u>not</u> apply to the concentration of tritium in meat. A separate equation is provided in NUREG 0133, section 5.3.1.4 to determine Tritium value.

Reference: The equation deriving R^*_i (D/Q) was taken from NUREG 0133, Section 5.3.1.4.

t_f in NUREG 0133 is equivalent to t_s in R.G. 1.109 Table E-15.

TABLE 4.4-10

Ingestion Dose Factors

Grass-Cow-Meat Pathway (Child)

Nuclide	Bone	Liver	T. Body	Thyroid	Kidney	Lung	GI-LLI
H-3	2.34E2	2.34E2	2.34E2	2.34E2	2.34E2	2.34E2	2.34E2
Cr-51	ND	ND	8.82E3	4.89E3	1.34E3	8.93E3	4.68E5
Mn-54	ND	7.99E6	2.13E6	ND	2.24E6	ND	6.70E6
Fe-55	4.57E8	2.42E8	7.50E7	ND	ND	1.37E8	4.49E7
Fe-59	3.81E8	6.16E8	3.07E8	ND	ND	1.79E8	6.42E8
Co-58	ND	1.65E7	5.04E7	ND	ND	ND	9.60E7
Co-60	ND	6.93E7	2.04E8	ND	ND	ND	3.84E8
Ni-63	2.91E10	1.56E9	9.91E8	ND	ND	ND	1.05E8
Zn-65	3.76E8	1.00E9	6.22E8	ND	6.30E8	ND	1.76E8
Rb-86	ND	5.77E8	3.55E8	ND	ND	ND	3.71E7
Sr-89	4.92E8	ND	1.40E7	ND	ND	ND	1.90E7
Sr-90	1.04E10	ND	2.64E9	ND	ND	ND	1.40E8
Y-91	1.81E6	ND	4.83E4	ND	ND	ND	2.41E8
Zr-95	2.69E6	5.91E5	5.26E5	ND	8.46E5	ND	6.16E8
Nb-95	3.09E6	1.20E6	8.61E5	ND	1.13E6	ND	2.23E9
Ru-103	1.55E8	ND	5.97E7	ND	3.91E8	ND	4.02E9
Ru-106	4.44E9	ND	5.54E8	ND	5.99E9	ND	6.90E10
Ag-110m	8.41E6	5.68E6	4.54E6	ND	1.06E7	ND	6.76E8
Te-125m	5.69E8	1.54E8	7.59E7	1.60E8	ND	ND	5.49E8
Te-127m	1.77E9	4.78E8	2.11E8	4.24E8	5.06E9	ND	1.44E9
Te-129m	4.78E9	5.05E8	2.81E8	5.83E8	5.31E9	ND	2.21E9
I-131	1.66E7	1.67E7	9.49E6	5.52E9	2.74E7	ND	1.49E6
Cs-134	9.22E8	1.51E9	3.19E8	ND	4.69E8	1.68E8	8.16E6
Cs-136	1.73E7	4.74E7	3.07E7	ND	2.53E7	3.77E6	1.67E6
Cs-137	1.33E9	1.28E9	1.88E8	ND	4.16E8	1.50E8	7.99E6
Ba-140	4.39E7	3.85E4	2.56E6	ND	1.25E4	2.29E4	2.22E7
Ce-141	2.22E4	1.11E4	1.64E3	ND	4.86E3	ND	1.38E7
Ce-144	2.32E6	7.26E5	1.24E5	ND	4.02E5	ND	1.89E8
Pr-143	3.35E4	1.01E4	1.66E3	ND	5.45E3	ND	3.61E7
Nd-147	1.18E4	9.60E3	7.43E2	ND	5.27E3	ND	1.52E7

TABLE 4.4-11

Ingestion Dose Factors

Grass-Cow-Meat Pathway (Teen)

Nuclide	Bone	Liver	T. Body	Thyroid	Kidney	Lung	GI-LLI
H-3	1.94E2	1.94E2	1.94E2	1.94E2	1.94E2	1.94E2	1.94E2
Cr-51	ND	ND	5.65E3	3.14E3	1.24E3	8.07E3	9.49E5
Mn-54	ND	6.98E6	1.39E6	ND	2.08E6	ND	1.43E7
Fe-55	2.38E8	1.69E8	3.93E7	ND	ND	1.07E8	7.30E7
Fe-59	2.15E8	5.01E8	1.94E8	ND	ND	1.58E8	1.19E9
Co-58	ND	1.41E7	3.25E7	ND	ND	ND	1.94E8
Co-60	ND	5.83E7	1.31E8	ND	ND	ND	7.60E8
Ni-63	1.52E10	1.07E9	5.15E8	ND	ND	ND	1.71E8
Zn-65	2.50E8	8.69E8	4.06E8	ND	5.56E8	ND	3.68E8
Rb-86	ND	4.06E8	1.91E8	ND	ND	ND	6.01E7
Sr-89	2.60E8	ND	7.44E6	ND	ND	ND	3.09E7
Sr-90	8.05E9	ND	1.99E9	ND	ND	ND	2.26E8
Y-91	9.56E5	ND	2.56E4	ND	ND	ND	3.92E8
Zr-95	1.51E6	4.78E5	3.28E5	ND	7.02E5	ND	1.10E9
Nb-95	1.79E6	9.93E5	5.47E5	ND	9.63E5	ND	4.25E9
Ru-103	8.58E7	ND	3.67E7	ND	3.03E8	ND	7.17E9
Ru-106	2.36E9	ND	2.97E8	ND	4.55E9	ND	1.13E11
Ag-110m	5.07E6	4.80E6	2.92E6	ND	9.15E6	ND	1.35E9
Te-125m	3.03E8	1.09E8	4.05E7	8.47E7	ND	ND	8.94E8
Te-127m	9.42E8	3.34E8	1.12E8	2.24E8	3.82E9	ND	2.35E9
Te-129m	9.61E8	3.57E8	1.52E8	3.10E8	4.02E9	ND	3.61E9
I-131	8.97E6	1.26E7	6.75E6	3.66E9	2.16E7	ND	2.48E6
Cs-134	5.23E8	1.23E9	5.71E8	ND	3.91E8	1.49E8	1.53E7
Cs-136	9.96E6	3.92E7	2.63E7	ND	2.13E7	3.36E6	3.15E6
Cs-137	7.24E8	9.63E8	3.36E8	ND	3.28E8	1.27E8	1.37E7
Ba-140	2.39E7	2.93E4	1.54E6	ND	9.94E3	1.97E4	3.69E7
Ce-141	1.18E4	7.88E3	9.05E2	ND	3.71E3	ND	2.25E7
Ce-144	1.23E6	5.08E5	6.60E4	ND	3.04E5	ND	3.09E8
Pr-143	1.76E4	7.03E3	8.76E2	ND	4.09E3	ND	5.79E7
Nd-147	6.32E3	6.87E3	4.12E2	ND	4.04E3	ND	2.48E7

TABLE 4.4-12

Ingestion Dose Factors

Grass-Cow-Meat Pathway (Adult)

Nuclide	Bone	Liver	T. Body	Thyroid	Kidney	Lung	GI-LLI
H-3	3.25E2	3.25E2	3.25E2	3.25E2	3.25E2	3.25E2	3.25E2
Cr-51	ND	ND	7.06E3	4.22E3	1.56E3	9.37E3	1.78E6
Mn-54	ND	9.16E6	1.75E6	ND	2.72E6	ND	2.80E7
Fe-55	2.93E8	2.02E8	4.72E7	ND	ND	1.13E8	1.16E8
Fe-59	2.69E8	6.32E8	2.42E8	ND	ND	1.76E8	2.11E9
Co-58	ND	1.83E7	4.10E7	ND	ND	ND	3.70E8
Co-60	ND	7.52E7	1.66E8	ND	ND	ND	1.41E9
Ni-63	1.89E10	1.31E9	6.33E8	ND	ND	ND	2.73E8
Zn-65	3.56E8	1.13E9	5.12E8	ND	7.58E8	ND	7.13E8
Rb-86	ND	4.86E8	2.27E8	ND	ND	ND	9.59E7
Sr-89	3.08E8	ND	8.83E6	ND	ND	ND	4.93E7
Sr-90	1.24E10	ND	3.05E9	ND	ND	ND	3.59E8
Y-91	1.13E6	ND	3.03E4	ND	ND	ND	6.24E8
Zr-95	1.89E6	6.06E5	4.10E5	ND	9.51E5	ND	1.92E9
Nb-95	2.29E6	1.28E6	6.86E5	ND	1.26E6	ND	7.74E9
Ru-103	1.05E8	ND	4.54E7	ND	4.02E8	ND	1.23E10
Ru-106	2.80E9	ND	3.54E8	ND	5.40E9	ND	1.81E11
Ag-110m	6.70E6	6.19E6	3.69E6	ND	1.22E7	ND	2.53E9
Te-125m	3.59E8	1.30E8	4.81E7	1.08E8	1.46E9	ND	1.43E9
Te-127m	1.12E9	3.99E8	1.36E8	2.85E8	4.53E9	ND	3.74E9
Te-129m	1.15E9	4.28E8	1.82E8	3.94E8	4.79E9	ND	5.78E9
I-131	1.08E7	1.54E7	8.85E6	5.06E9	2.65E7	ND	4.07E6
Cs-134	6.57E8	1.56E9	1.29E9	ND	5.06E8	1.68E8	2.74E7
Cs-136	1.28E7	5.04E7	3.63E7	ND	2.80E7	3.84E6	5.73E6
Cs-137	8.72E8	1.19E9	7.81E8	ND	4.05E8	1.35E8	2.31E7
Ba-140	2.90E7	3.64E4	1.90E6	ND	1.24E4	2.08E4	5.96E7
Ce-141	1.41E4	9.51E3	1.08E3	ND	4.41E3	ND	3.63E7
Ce-144	1.46E6	6.09E5	7.82E4	ND	3.61E5	ND	4.93E8
Pr-143	2.09E4	8.39E3	1.04E3	ND	4.85E3	ND	9.17E7
Nd-147	7.17E3	8.29E3	4.96E2	ND	4.85E3	ND	3.99E7

Calculation of Ingestion Dose Factor
Vegetation Pathway

$$R_i^v[D/Q] = K'\left[\frac{r}{Y_v(\lambda_i + \lambda_w)}\right](DFL_i)_a\left[U_a^L f_L e^{-\lambda_i t_L} + U_a^s f_g e^{-\lambda_i t_h}\right]$$

where: Units = $m^2 \cdot mrem/yr$ per uCi/sec. Reference Table, R.G. 1.109

K'	=	A constant of unit conversion, 10^6 pCi/uCi.	
U_a^L	=	The consumption rate of fresh leafy vegetation by the receptor in age group (a), in kg/yr. Infant 0 Child 26 Teen 42 Adult 64	E-5
U_a^s	=	The consumption rate of stored vegetation by the receptor in age group (a), in kg/yr Infant 0 Child 520 Teen 630 Adult 520	E-5
$(DFL_i)_a$	=	The maximum organ ingesting dose factor for the ith radionuclide for the receptor in age group (a), in mrem/pCi.	E-11 to E-14
f_L	=	The fraction of the annual intake of fresh leafy vegetation grown locally. (default 1.0)	E-15
f_g	=	The fraction of the annual intake of stored vegetation grown locally. (default 0.76)	E-15
t_L	=	The average time between harvest of leafy vegetation and its consumption, 8.6×10^4 seconds (1 day)	E-15
t_h	=	The average time between harvest of stored vegetation and its consumption, 5.18×10^6 seconds (60 days)	E-15
Y_v	=	The vegetation areal density, 2.0 kg/m^2	E-15
r	=	Fraction of deposited activity retained on the vegetation 1.0 radioiodine 0.2 particulates	E-15
λ_i	=	The decay constant for the ith radionuclide, in sec^{-1}	---
λ_w	=	The decay constant for removal of activity on leaf and plant surfaces by weathering, 5.73×10^{-7} sec^{-1} (corresponding to a 14 day half-life).	E-15

Note: The above equation does <u>not</u> apply to the concentrations of tritium in vegetation. A separate equation is provided in NUREG 0133, section 5.3.1.5 to determine tritium values.

Reference: The equation deriving R_i^v (D/Q) was taken from NUREG 0133, Section 5.3.1.5.

TABLE 4.4-13

Ingestion Dose Factors

Vegetation Pathway (Child)

Nuclide	Bone	Liver	T. Body	Thyroid	Kidney	Lung	GI-LLI
H-3	4.01E3	4.01E3	4.01E3	4.01E3	4.01E3	4.01E3	4.01E3
Cr-51	ND	ND	1.18E5	6.54E4	1.79E4	1.19E5	6.25E6
Mn-54	ND	6.61E8	1.76E8	ND	1.85E8	ND	5.55E8
Fe-55	8.00E8	4.24E8	1.31E8	ND	ND	2.40E8	7.86E7
Fe-59	4.07E8	6.58E8	3.28E8	ND	ND	1.91E8	6.85E8
Co-58	ND	6.47E7	1.98E8	ND	ND	ND	3.77E8
Co-60	ND	3.78E8	1.12E9	ND	ND	ND	2.10E9
Ni-63	3.95E10	2.11E9	1.34E9	ND	ND	ND	1.42E8
Zn-65	8.13E8	2.17E9	1.35E9	ND	1.36E9	ND	3.80E8
Rb-86	ND	4.52E8	2.78E8	ND	ND	ND	2.91E7
Sr-89	3.74E10	ND	1.07E9	ND	ND	ND	1.45E9
Sr-90	1.24E12	ND	3.15E11	ND	ND	ND	1.67E10
Y-91	1.87E7	ND	5.01E5	ND	ND	ND	2.49E9
Zr-95	3.92E6	8.63E5	7.68E5	ND	1.23E6	ND	9.00E8
Nb-95	4.10E5	1.60E5	1.14E5	ND	1.50E5	ND	2.95E8
Ru-103	1.54E7	ND	5.92E6	ND	3.88E7	ND	3.98E8
Ru-106	7.45E8	ND	9.30E7	ND	1.01E9	ND	1.16E10
Ag-110m	3.23E7	2.18E7	1.74E7	ND	4.06E7	ND	2.59E9
Te-125m	3.51E8	9.50E7	4.67E7	9.84E7	ND	ND	3.38E8
Te-127m	1.32E9	3.56E8	1.57E8	3.16E8	1.94E9	ND	1.07E9
Te-129m	8.58E8	2.40E8	1.33E8	2.77E8	2.52E9	ND	1.05E9
I-131	1.43E8	1.44E8	8.18E7	4.76E10	2.36E8	ND	1.28E7
Cs-134	1.60E10	2.63E10	5.55E9	ND	8.15E9	2.92E9	1.42E8
Cs-136	4.44E8	1.22E9	7.90E8	ND	6.50E8	9.69E7	4.29E7
Cs-137	2.39E10	2.29E10	3.38E9	ND	7.46E9	2.68E9	1.43E8
Ba-140	2.77E8	2.43E5	1.62E7	ND	7.91E4	1.45E5	1.40E8
Ce-141	6.56E5	3.27E5	4.86E4	ND	1.43E5	ND	4.08E8
Ce-144	1.27E8	3.98E7	6.78E6	ND	2.21E7	ND	1.04E10
Pr-143	1.46E5	4.39E4	7.26E3	ND	2.38E4	ND	1.58E8
Nd-147	7.23E4	5.86E4	4.54E3	ND	5.47E1	ND	9.28E7

TABLE 4.4-14

Ingestion Dose Factors

Vegetation Pathway (Teen)

Nuclide	Bone	Liver	T. Body	Thyroid	Kidney	Lung	GI-LLI
H-3	4.10E3	4.10E3	4.10E3	4.10E3	4.10E3	4.10E3	4.10E3
P-32	1.60E9	9.91E7	6.20E7	ND	ND	ND	1.34E8
Cr-51	ND	ND	6.19E4	3.44E4	1.36E4	8.84E4	1.04E7
Mn-54	ND	4.52E8	8.97E7	ND	1.35E8	ND	9.27E8
Fe-55	3.25E8	2.31E8	5.38E7	ND	ND	1.46E8	9.98E7
Fe-59	1.83E8	4.28E8	1.65E8	ND	ND	1.35E8	1.01E9
Co-58	ND	4.38E7	1.01E8	ND	ND	ND	6.04E8
Co-60	ND	2.49E8	5.60E8	ND	ND	ND	3.24E9
Ni-63	1.61E10	1.13E9	5.44E8	ND	ND	ND	1.81E8
Zn-65	4.24E8	1.47E9	6.87E8	ND	9.43E8	ND	6.24E8
Rb-86	ND	2.73E8	1.28E8	ND	ND	ND	4.04E7
Sr-89	1.57E10	ND	4.50E8	ND	ND	ND	1.87E9
Sr-90	7.51E11	ND	1.85E11	ND	ND	ND	2.11E10
Y-91	7.87E6	ND	2.11E5	ND	ND	ND	3.23E9
Zr-95	1.75E6	5.52E5	3.80E5	ND	8.12E5	ND	1.27E9
Nb-95	1.92E5	1.06E5	5.85E4	ND	1.03E5	ND	4.54E8
Ru-103	6.85E6	ND	2.93E6	ND	2.41E7	ND	5.72E8
Ru-106	3.09E8	ND	3.90E7	ND	5.97E8	ND	1.48E10
Ag-110m	1.52E7	1.44E7	8.76E6	ND	2.75E7	ND	4.04E9
Te-125m	1.48E8	5.34E7	1.98E7	4.14E7	ND	ND	4.37E8
Te-127m	5.52E8	1.96E8	6.56E7	1.31E8	2.24E9	ND	1.37E9
Te-129m	3.69E8	1.37E8	5.84E7	1.19E8	1.54E9	ND	1.39E9
I-131	7.70E7	1.08E8	5.79E7	3.15E10	1.86E8	ND	2.13E7
Cs-134	7.10E9	1.67E10	7.75E9	ND	5.31E9	2.03E9	2.08E8
Cs-136	4.65E7	1.83E8	1.23E8	ND	9.96E7	1.57E7	1.47E7
Cs-137	1.01E10	1.35E10	4.69E9	ND	4.59E9	1.78E9	1.92E8
Ba-140	1.39E8	1.71E5	8.97E6	ND	5.78E4	1.15E5	2.15E8
Ce-141	2.83E5	1.89E5	2.17E4	ND	8.90E4	ND	5.41E8
Ce-144	5.27E7	2.18E7	2.82E6	ND	1.30E7	ND	1.33E10
Pr-143	6.99E4	2.79E4	3.48E3	ND	1.62E4	ND	2.30E8
Nd-147	3.66E4	3.98E4	2.39E3	ND	2.34E4	ND	1.44E8

TABLE 4.4-15

Ingestion Dose Factors

Vegetation Pathway (Adult)

Nuclide	Bone	Liver	T. Body	Thyroid	Kidney	Lung	GI-LLI
H-3	5.11E3	5.11E3	5.11E3	5.11E3	5.11E3	5.11E3	5.11E3
Cr-51	ND	ND	4.66E4	2.79E4	1.03E4	6.18E4	1.17E7
Mn-54	ND	3.11E8	5.94E7	ND	9.27E7	ND	9.54E8
Fe-55	2.09E8	1.45E8	3.37E7	ND	ND	8.06E7	8.29E7
Fe-59	1.29E8	3.02E8	1.16E8	ND	ND	8.45E7	1.01E9
Co-58	ND	3.09E7	6.92E7	ND	ND	ND	6.26E8
Co-60	ND	1.67E8	3.69E8	ND	ND	ND	3.14E9
Ni-63	1.04E10	7.21E8	3.49E8	ND	ND	ND	1.50E8
Zn-65	3.18E8	1.01E9	4.57E8	ND	6.76E8	ND	6.37E8
Rb-86	ND	2.19E8	1.02E8	ND	ND	ND	4.32E7
Sr-89	1.03E10	ND	2.96E8	ND	ND	ND	1.65E9
Sr-90	6.05E11	ND	1.48E11	ND	ND	ND	1.75E10
Y-91	5.13E6	ND	1.37E5	ND	ND	ND	2.82E9
Zr-95	1.19E6	3.83E5	2.59E5	ND	6.00E5	ND	1.21E9
Nb-95	1.42E5	7.90E4	4.24E4	ND	7.81E4	ND	4.79E8
Ru-103	4.79E6	ND	2.06E6	ND	1.83E7	ND	5.59E8
Ru-106	1.93E8	ND	2.44E7	ND	3.72E8	ND	1.25E10
Ag-110m	1.06E7	9.78E6	5.81E6	ND	1.92E7	ND	3.99E9
Te-125m	9.66E7	3.50E7	1.29E7	2.90E7	3.93E8	ND	3.86E8
Te-127m	3.49E8	1.25E8	4.26E7	8.93E7	1.42E9	ND	1.17E9
Te-129m	2.56E8	9.55E7	4.05E7	8.79E7	1.07E9	ND	1.29E9
I-131	8.09E7	1.16E8	6.63E7	3.79E10	1.98E8	ND	3.05E7
Cs-134	4.66E9	1.11E10	9.07E9	ND	3.59E9	1.19E9	1.94E8
Cs-136	4.47E7	1.77E8	1.27E8	ND	9.82E7	1.35E7	2.01E7
Cs-137	6.36E9	8.70E9	5.70E9	ND	2.95E9	9.81E8	1.68E8
Ba-140	1.29E8	1.62E5	8.47E6	ND	5.52E4	9.29E4	2.66E8
Ce-141	1.97E5	1.33E5	1.51E4	ND	6.20E4	ND	5.10E8
Ce-144	3.29E7	1.37E7	1.77E6	ND	8.15E6	ND	1.11E10
Pr-143	6.25E4	2.51E4	3.10E3	ND	1.45E4	ND	2.74E8
Nd-147	3.36E4	3.89E4	2.33E3	ND	2.27E4	ND	1.87E8

Calculation of Dose Factors

in the Ground Plane Pathway (R_i^G [D/Q])

$$R_i^G[D/Q] = K'K''(SF)(DFG_i)\left[\left(1-e^{-\lambda_i t}\right)/\lambda_i\right]$$

units = m^2 mrem/yr per uCi/sec

where: Reference Table,R.G.1.109

K′	=	A constant unit of conversion, 10^6 pCi/μCi.	
K″	=	A constant unit of conversion, 8760 hr/yr	
SF	=	The shielding factor, 0.7(dimensionless)	E-15
λ_i	=	The decay constant for the ith radionuclide, sec^{-1}	
t	=	The exposure period, 4.73 x 10^8 sec (15 years)	
DFG_i	=	The ground plane dose conversion factor for the ith radionuclide (mrem/hr per pCi/m^2)	E-6

Reference: The equation deriving R_i^G [D/Q] was taken from NUREG 0133, Section 5.3.1.2.

Table 4.4-16

Dose Factors Ground Plane Pathway (R_i^G [D/Q])

	T. Body	Skin
Cr-51	4.65E6	5.5E6
Mn-54	1.39E9	1.63E9
Fe-55	0	0
Fe-59	2.73E8	3.21E8
Co-58	3.79E8	4.44E8
Co-60	2.15E10	2.53E10
Ni-63	0	0
Zn-65	7.47E8	8.57E8
Rb-86	8.98E6	1.02E7
Sr-89	2.17E4	2.52E4
Y-91	1.07E6	1.21E6
Zr-95	2.45E8	2.84E8
Nb-95	1.41E7	1.66E7
Ru-106	4.22E8	5.07E8
Ag-110m	3.44E9	4.02E9
Te-125m	1.55E6	2.13E6
Te-127m	9.17E4	1.08E5
Te-129m	1.98E7	2.31E7
I-131	1.72E7	2.08E7
Cs-134	6.85E9	8.0E9
Cs-136	1.51E8	1.72E8
Cs-137	1.03E10	1.20E10
Ba-140	2.06E7	2.35E7
Ce-141	1.37E7	1.54E7
Ce-144	6.95E7	8.05E7
Pr-143	0	0
Nd-147	8.40E6	1.01E7

Units are $m^2 \cdot mrem/yr$ per $\mu Ci/sec$

CALCULATION OF LIQUID EFFLUENT ADULT INGESTION DOSE FACTORS

$$A_{i\tau} = 1.14E5\left(21BF_i + 5BI_i\right)DF_i$$

$A_{i\tau}$ = Composite dose parameter for the total body or critical organ of an adult for nuclide i, for all appropriate pathways, mrem/hr per µi/ml

1.14E5 = units conversion factor, 10^6pci/µci x 10^3 ml/kg ÷ 8760 hr/yr

BF_i = Bioaccumulation factor for nuclide i, in fish, pCi/kg per pCi/L, from Table A-1 of Regulatory Guide 1.109 (Rev. 1) or Table A-8 of Regulatory Guide 1.109 (original draft).

BI_i = Bioaccumulation factor for nuclide i, in invertebrates, pCi/kg per pCi/L, from Table A-1 of Regulatory Guide 1.109 (Rev. 1) or Table A-8 of Regulatory Guide 1.109 (original draft).

DF_i = Dose conversion factor for nuclide i, for adults in pre-selected organ τ, in mrem/pCi, from Table E-11 or Regulatory Guide 1.109 (Rev. 1) or Table A-3 of Regulatory Guide 1.109 (original draft).

Reference: The equation for Saltwater sites from NUREG 0133, Section 4.3.1, where U_W/D_W = 0 since no drinking water pathway exists.

Table 4.4-17

Liquid Effluent - Adult Ingestion Dose Factors

Nuclide	Bone	Liver	T. Body	Thyroid	Kidney	Lung	GI-LLI
H-3	2.82E-1	2.82E-1	2.82E-1	2.82E-1	2.82E-1	2.82E-1	2.82E-1
Na-24	4.57E-1	4.57E-1	4.57E-1	4.57E-1	4.57E-1	4.57E-1	4.57E-1
Cr-51	ND	ND	5.58E0	3.34E0	1.23E0	7.40E0	1.40E3
Mn-54	ND	7.06E3	1.35E3	ND	2.10E3	ND	2.16E4
Mn-56	ND	1.78E2	3.15E1	ND	2.26E2	ND	5.67E3
Fe-55	5.11E4	3.53E4	8.23E3	ND	ND	1.97E4	2.03E4
Fe-59	8.06E4	1.90E5	7.27E4	ND	ND	5.30E4	6.32E5
Co-58	ND	6.03E2	1.35E3	ND	ND	ND	1.22E4
Co-60	ND	1.73E3	3.82E3	ND	ND	ND	3.25E4
Ni-63	4.96E4	3.44E3	1.67E3	ND	ND	ND	7.18E2
Ni-65	2.02E2	3.31E1	1.20E1	ND	ND	ND	6.65E2
Cu-64	ND	2.14E2	1.01E2	ND	5.40E2	ND	1.83E4
Zn-65	1.61E5	5.13E5	2.32E5	ND	3.43E5	ND	3.23E5
Zn-69	3.43E2	6.56E2	4.56E1	ND	4.26E2	ND	9.85E1
Br-83	ND	ND	7.25E-2	ND	ND	ND	1.04E-1
Br-84	ND	ND	9.39E-2	ND	ND	ND	7.37E-7
Br-85	ND	ND	3.86E-3	ND	ND	ND	LE-18
Rb-86	ND	6.24E2	2.91E2	ND	ND	ND	1.23E2
Rb-88	ND	1.79E0	9.49E-1	ND	ND	ND	2.47E-11
Rb-89	ND	1.19E0	8.34E-1	ND	ND	ND	6.89E-14
Sr-89	4.99E3	ND	1.43E2	ND	ND	ND	8.00E2
Sr-90	1.23E5	ND	3.01E4	ND	ND	ND	3.55E3
Sr-91	9.18E1	ND	3.71E0	ND	ND	ND	4.37E2
Sr-92	3.48E1	ND	1.51E0	ND	ND	ND	6.90E2
Y-90	6.06E0	ND	1.63E-1	ND	ND	ND	6.42E4
Y-91m	5.73E-2	ND	2.22E-3	ND	ND	ND	1.68E-1
Y-91	8.88E1	ND	2.37E0	ND	ND	ND	4.89E4
Y-92	5.32E-1	ND	1.56E-2	ND	ND	ND	9.32E3
Y-93	1.69E0	ND	4.66E-2	ND	ND	ND	5.35E4
Zr-95	1.59E1	5.11E0	3.46E0	ND	8.02E0	ND	1.62E4
Zr-97	8.81E-1	1.78E-1	8.13E-2	ND	2.68E-1	ND	5.51E4

Table 4.4-17

Liquid Effluent - Adult Ingestion Dose Factors

Nuclide	Bone	Liver	T. Body	Thyroid	Kidney	Lung	GI-LLI
Nb-95	4.47E2	2.49E2	1.34E2	ND	2.46E2	ND	1.51E6
Mo-99	ND	9.05E-4	1.72E-4	ND	2.05E-3	ND	2.10E-3
Tc-99m	1.30E-2	3.66E-2	4.66E-1	ND	5.56E-1	1.79E-2	2.17E1
Tc-101	1.33E-2	1.92E-2	1.88E-1	ND	3.46E-1	9.81E-3	5.77E-14
Ru-103	1.07E2	ND	4.60E1	ND	4.07E2	ND	1.25E4
Ru-105	8.89E0	ND	3.51E0	ND	1.15E2	ND	5.44E3
Ru-106	1.59E3	ND	2.01E2	ND	3.06E3	ND	1.03E5
Ag-110m	1.57E3	1.45E3	1.33E1	ND	2.85E3	ND	5.91E5
Sb-124	2.77E2	5.23E0	1.09E2	6.70E1	ND	2.15E2	7.83E3
Sb-125	2.20E2	2.37E0	4.42E1	1.95E1	ND	2.30E4	1.94E4
Sb-126	1.13E2	2.31E0	4.09E1	6.95E1	ND	6.95E1	9.27E3
Te-125m	2.17E2	7.86E1	2.91E1	6.52E1	8.82E2	ND	8.66E2
Te-127m	5.48E2	1.96E2	6.68E1	1.40E2	2.23E3	ND	1.84E3
Te-127	8.90E0	3.20E0	1.93E0	6.60E0	3.63E1	ND	7.03E2
Te-129m	9.31E2	3.47E2	1.47E2	3.20E2	3.89E3	ND	4.69E3
Te-129	2.54E0	9.55E-1	6.19E-1	1.95E0	1.07E1	ND	1.92E0
Te-131m	1.40E2	6.85E1	5.71E1	1.08E2	6.94E2	ND	6.80E3
Te-131	1.59E0	6.66E-1	5.03E-1	1.31E0	6.99E0	ND	2.26E-1
Te-132	2.04E2	1.32E2	1.24E2	1.46E2	1.27E3	ND	6.24E3
I-130	3.96E1	1.17E2	4.61E1	9.91E3	1.82E2	ND	1.01E2
I-131	2.18E2	3.12E2	1.79E2	1.02E5	5.35E2	ND	8.23E1
I-132	1.06E1	2.85E1	9.96E0	9.96E2	4.54E1	ND	5.35E0
I-133	7.54E1	1.30E2	3.95E1	1.90E4	2.26E2	ND	1.16E2
I-134	5.56E0	1.51E1	5.40E0	2.62E2	2.40E1	ND	1.32E-2
I-135	2.32E1	6.08E1	2.24E1	4.01E3	9.75E1	ND	6.87E1
Cs-134	6.84E3	1.63E4	1.33E4	ND	5.27E3	1.75E3	2.85E2
Cs-136	7.16E2	2.83E3	2.04E3	ND	1.57E3	2.16E2	3.21E2
Cs-137	8.78E3	1.20E4	7.85E3	ND	4.07E3	1.35E3	2.32E2
Cs-138	6.07E0	1.20E1	5.94E0	ND	8.81E0	8.70E-1	5.12E-5
Ba-139	7.85E0	5.59E-3	2.30E-1	ND	5.23E-3	3.17E-3	1.39E1
Ba-140	1.64E3	2.06E0	1.08E2	ND	7.02E-1	1.18E0	3.38E3
Ba-141	3.81E0	3.69E-3	1.29E-1	ND	2.68E-3	1.63E-3	1.80E-9
Ba-142	1.72E0	1.77E-3	1.08E-1	ND	1.50E-3	1.00E-3	2.43E-18
La-140	1.57E0	7.94E-1	2.10E-1	ND	ND	ND	5.83E4
La-142	8.06E-2	3.67E-2	9.13E-3	ND	ND	ND	2.68E2

Table 4.4-17

Liquid Effluent - Adult Ingestion Dose Factors

Nuclide	Bone	Liver	T. Body	Thyroid	Kidney	Lung	GI-LLI
Ce-141	3.43E0	2.32E0	2.63E-1	ND	1.08E0	ND	8.86E3
Ce-143	6.04E-1	4.46E2	4.94E-2	ND	1.97E-1	ND	1.67E4
Ce-144	1.79E2	7.47E1	9.59E0	ND	4.43E1	ND	6.04E4
Pr-143	5.79E0	2.32E0	2.87E-7	ND	1.34E0	ND	2.54E4
Pr-144	1.90E-2	7.87E-3	9.64E-4	ND	4.44E-3	ND	2.73E-9
Nd-147	3.96E0	4.58E0	2.74E-1	ND	2.68E0	ND	2.20E4
W-187	9.16E0	7.66E0	2.68E0	ND	ND	ND	2.51E3
Np-239	3.53E-2	3.47E-3	1.91E-3	ND	1.08E-2	Nd	7.11E2

SECTION 5.0

ENVIRONMENTAL MONITORING

Table 5.1-1

Environmental Radiological Monitoring Stations Locations

STATION	LOCATION	DIRECTION FROM PLANT	APPROX. DISTANCE FROM PLANT (mi)
C04	State Park Old Dam on River near road intersection	ENE	10.6
C07	Crystal River Public Water Plant	ESE	7.4
C09	Fort Island Gulf Beach	S	3.2
C10	Indian Waters Public Water Supply	ESE	6.0
C13	Mouth of Intake Canal	WSW	4.6
C14H	Head of Discharge Canal	NW	0.1
C14M	Midpoint of Discharge Canal	W	1.2
C14G	Discharge Canal at Gulf of Mexico	W	2.5
C18	Yankeetown City Well	N	5.3
C19	NW Corner State Roads 488 & 495	ENE	9.6
C29	Discharge Area	W	2.0
C30	Intake Area	WSW	3.4
C40	Near N.E. Site Boundary near excavated pond & pump station	E	3.6
C41	Onsite meteorological tower	SW	0.4
C46	North Pump Station	N	0.4
C47	Office of Radiation Control, Orlando	ESE	78
C48A	Onsite North of CR 4 & 5	N	0.4
C48B	Onsite NNE of CR 4 & 5	NNE	0.9

NOTE: Distances are approximate. More than one type of sample media(e.g. air and water) are obtained at some stations. For multi-media stations there may be minor difference in distance for each type of sample.

TABLE 5.1-2

RING TLDs
(INNER RING)

LOCATION	DIRECTION	APPROX. DISTANCE (Mi.)
C27	W	0.4
C60	N	0.9
C61	NNE	0.9
C62	NE	1.2
C63	ENE	0.9
C64	E	0.8
C65	ESE	0.3
C66	SE	0.4
C67	SSE	0.3
C68	S	0.3
C69	SSW	0.3
C41	SW	0.4
C70	WSW	0.7
C71	WNW	0.6
C72	NW	0.3
C73	NNW	0.7

TABLE 5.1-3

RING TLDs
(5 MILE RING)

LOCATION	DIRECTION	APPROX. DISTANCE (Mi.)
C18	N	5.3
C03	NNE	4.9
C04	NE	6.0
C74	ENE	5.1
C75	E	4.0
C76	ESE	5.6
C08	SE	5.7
C77	SSE	3.4
C09	S	3.2
C78	WSW	4.6
C14G	W	2.5
C01	NW	4.8
C79	NNW	5.0

FIGURE 5.1

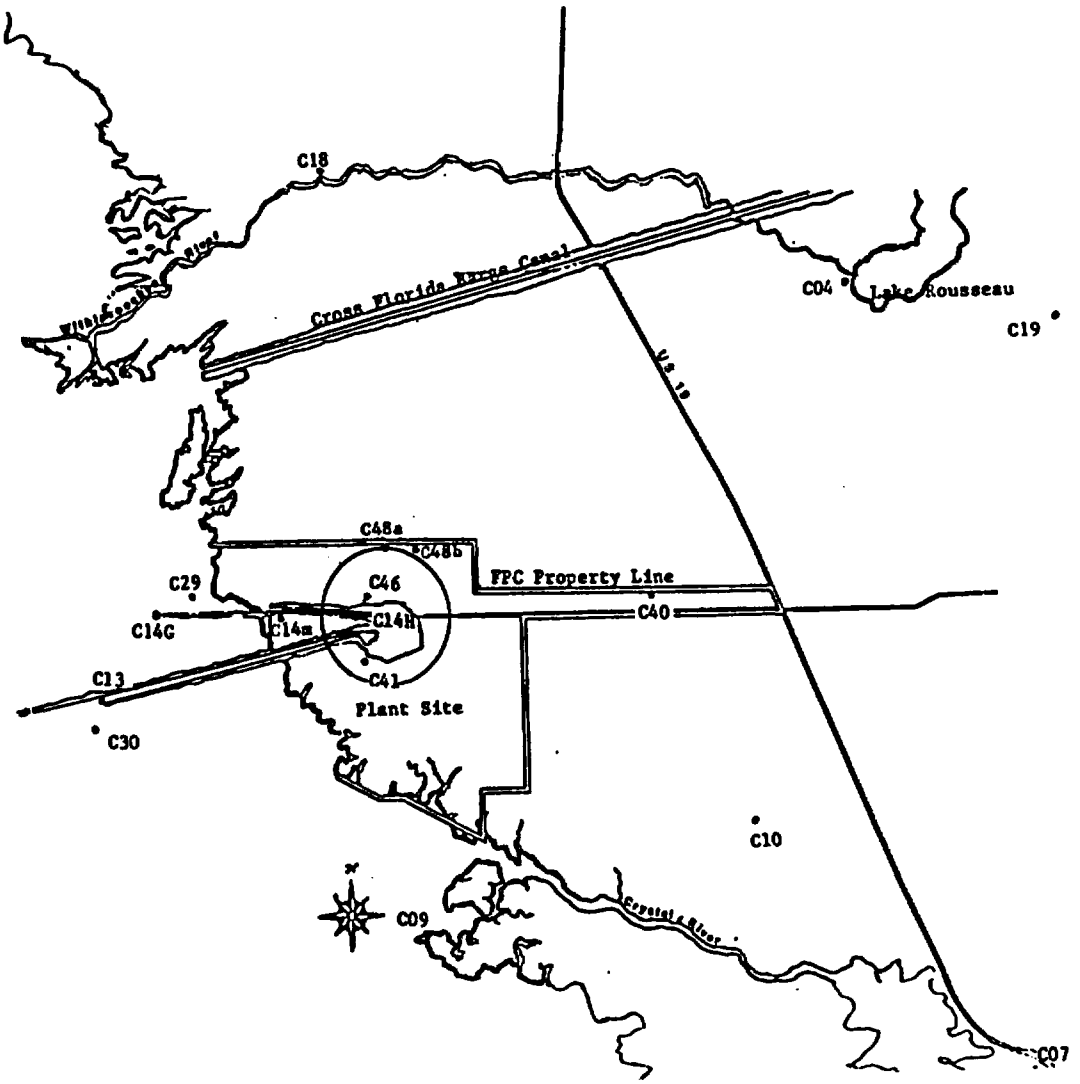

Environmental Monitoring
Sample Station Locations

FIGURE 5.2

Environmental Monitoring TLD Locations

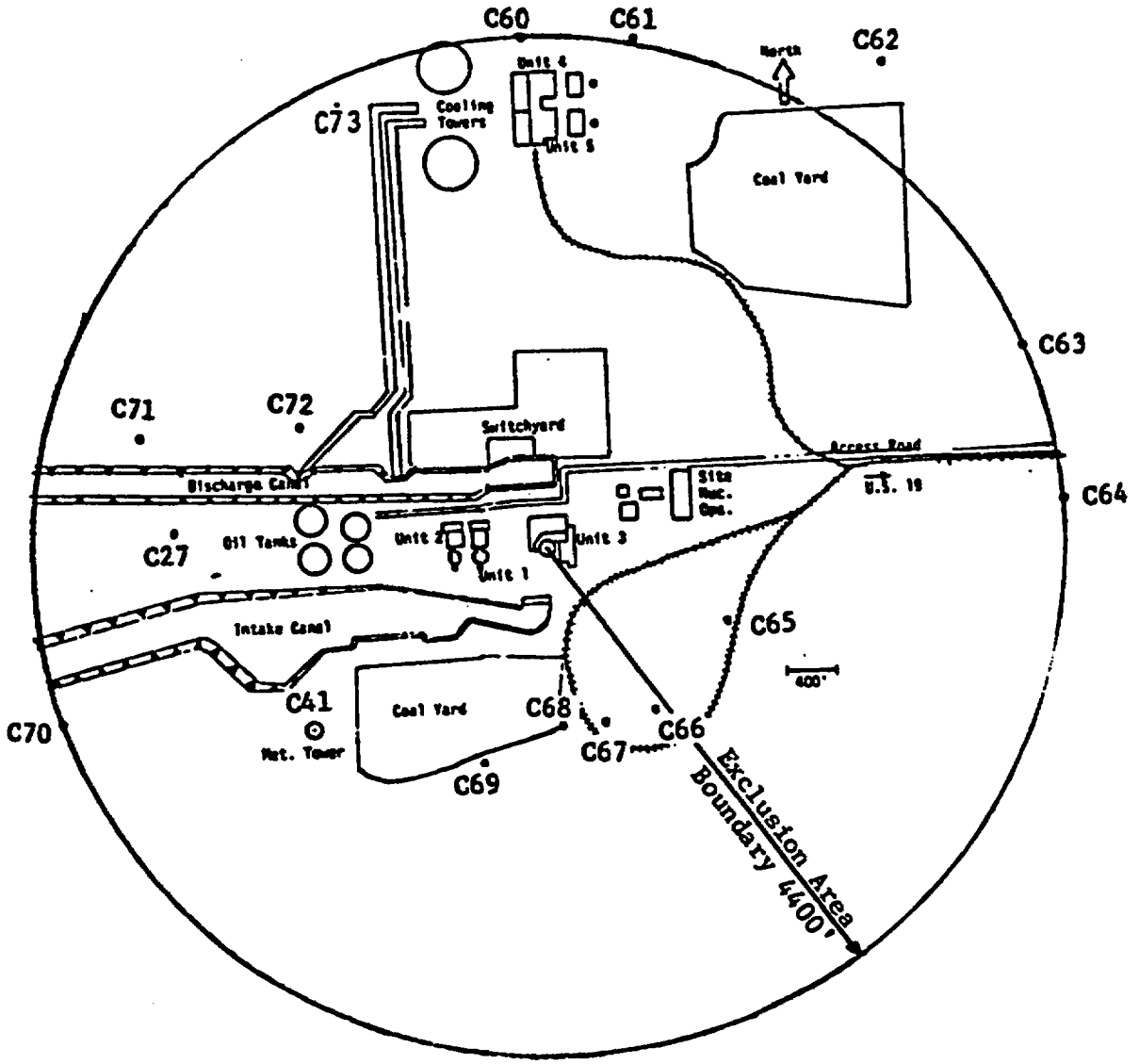

FIGURE 5.3

Environmental Monitoring TLD
Locations

(5 mile)

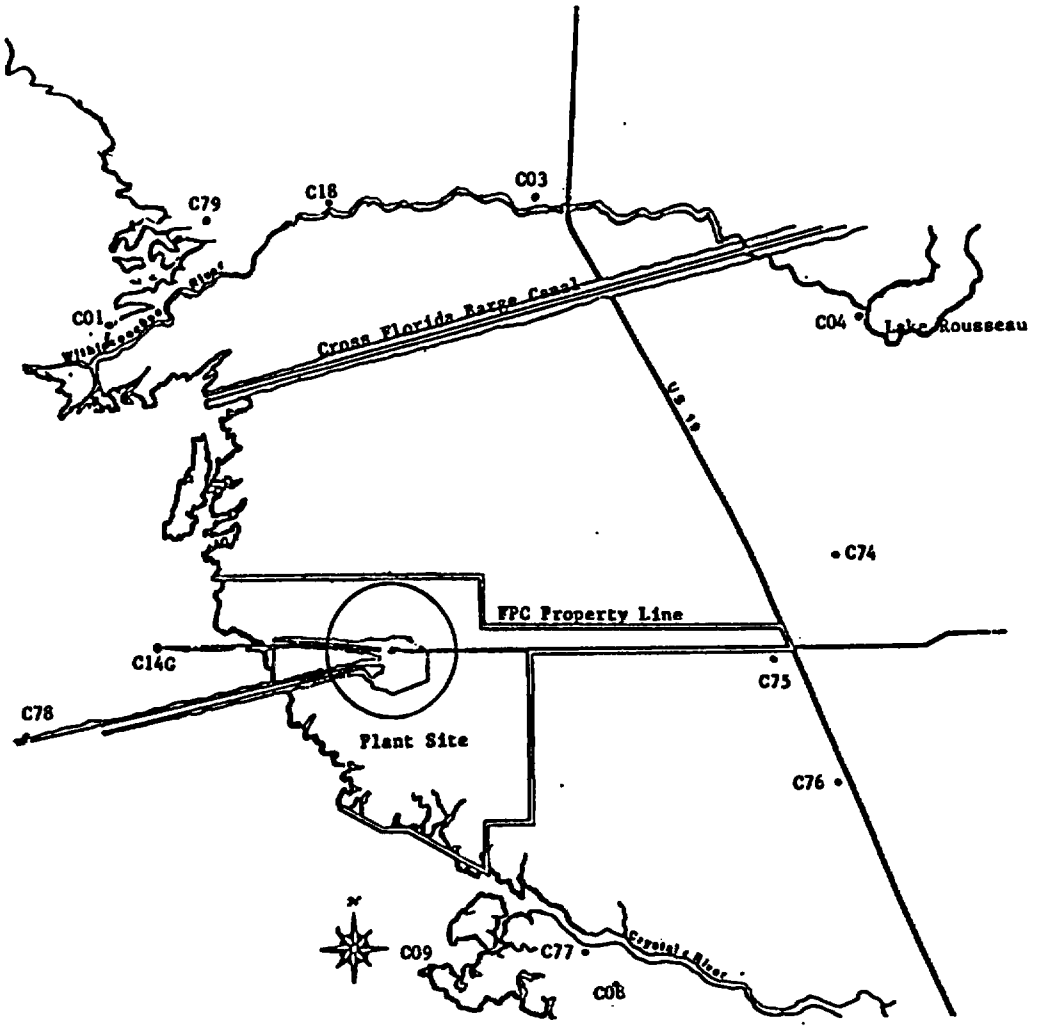

SECTION 6.0

ADMINISTRATIVE CONTROLS

6.1 ORIGIN AND PURPOSE OF THE OFFSITE DOSE CALCULATIONAL MANUAL

The Offsite Dose Calculational manual was developed to support the implementation of the Radiological Effluent Technical Specifications required by 10 CFR 50, Appendix I, and 10 CFR 50.36. The purpose of the manual is to provide the NRC with sufficient information relative to effluent monitor setpoint calculations, effluent related dose calculations, and environmental monitoring to demonstrate compliance with radiological effluent controls.

6.2 CHANGES

The ODCM shall be changed in accordance with Technical Specifications (ref. ITS 5.6.2.3). In addition, interdepartmental reviews shall be performed as appropriate.

6.3 REVIEW

The ODCM and its implementation shall be reviewed every 24 months (ref. FSAR 1.7.1.18)

6.4 UNPLANNED RELEASES

An UNPLANNED RELEASE is an unintended discharge of liquid or airborne radioactivity to the environment.

Examples:

Releasing the wrong waste tank.
Plant leakage which exceeds reporting limits such as those of 50.72 and 50.73.

Clarification:

The Auxiliary Building ventilation system is designed to handle leakage from various plant components. Leakage of this sort is not considered unplanned unless the magnitude of the leak is significant (i.e. reportable). Minor equipment failures which cause an increase in plant releases are not unplanned as it is expected that minor failures will occur from time-to-time. Human error which results in a release of radioactivity to the environment is considered unplanned.

6.5 RADIOACTIVE EFFLUENT RELEASE REPORT

This report is submitted as required by Technical Specification 5.7.1.1.c to Crystal River Facility Operating License No. DPR-72. The following information is included:

A summary of the quantities of radioactive liquid and gaseous effluents and solid waste released from the plant as outlined in Regulatory Guide 1.21 (Rev. 1, 1974) with data summarized on a quarterly basis following the format of Appendix B thereof.

An annual summary of hourly meteorological data collected over the previous years. (In lieu of submittal, this data is maintained on-site and is available to the NRC upon request.)

A list and description of unplanned releases to unrestricted areas.

Change to the Process Control Program (PCP)
Changes to the Off-Site Dose Calculation Manual (ODCM)
Significant changes to Radioactive Waste Treatment Systems

A list of new Environmental Radiological Monitoring Program dose calculation location changes identified by the land-use census.

Information relating to effluent monitors being inoperable for 30 or more days.

6.6 ANNUAL RADIOLOGICAL ENVIRONMENTAL OPERATING REPORT

This report is submitted as required by Technical Specification 5.7.1.1.b to Crystal River Facility Operating License No. DPR-72. The following information is included:

- Summaries
- Interpretations
- Unachievable LLDs, and
  - An analysis of trends of the results of the radiological environmental studies and previous annual reports.
  - An assessment of any observed impact of plant operation on the environment.

  NOTE: **If harmful effects or evidence of irreversible damage are detected by the monitoring, the Report shall provide an analysis of the problem and a planned course of action to alleviate the problem.**

- Summarized and tabulated results, in the format of Regulatory Guide 4.8 (December 1975), of all radiological environmental samples taken during the report period.

  NOTE: **If some results are not available for inclusion, the report shall note and explain the reason for the missing results. The missing results shall be submitted as soon as possible in a supplementary report.**

- A summary description of the REMP.
- A map of all sampling locations keyed to a table giving distances and directions from the reactor.
- Unavailability of milk or fresh leafy vegetable samples required by Table 2-7 of Technical Specifications.
- The results of land-use censuses.
- Results of Interlaboratory Comparison Program.