TRACE CALCULATION NOTEBOOK

Facility: BETHSY Facility, Centre D'Etudes Nucleaires de Grenoble, France

TRACE Version: 4.190

Date: March 2006

Written by: Weidong He and Don Palmrose
Organization: Advanced Systems Technology and Management, Inc.

Reviewed by: David Ebert
Organization: Advanced Systems Technology and Management, Inc.

AdSTM
Advanced Systems Technology and Management, Inc.

Preface

The original BETHSY Test 9.1b input deck was developed to run under the RELAP5 code package in support of International Standard Problem Number 27 (ISP-27). This RELAP5 input deck has an extensive calculation notebook written by personnel at the then Idaho National Engineering Laboratory. This RELAP5 input deck was then translated by ISL, Inc. (ISL), into a TRACE input deck via the SNAP program along with some necessary hand modifications that SNAP could not accomplish at that time.

The resulting TRACE input deck for Test 9.1b formed the base input deck (or reference input deck) for this follow-on study of the capabilities of TRACE Version 4.190. Two major changes were made on the reference deck to form the TRACE input deck used in this assessment work: 1) a 3-D VESSEL component replaces the 1-D component based BETHSY pressure vessel model of the reference deck; 2) a new steam generator model using PIPE and TEE components replaces the steam generator model of the reference deck. The rest of the BETHSY plant model remains the same in this new BEHTSY TRACE model as in the reference deck, including: the primary and secondary piping systems, the primary coolant pumps, the pressurizer and their associated HTSTRs, control and trip systems, etc. For the unchanged portion of the plant model, the reader is referred back to the INEL calculation notebook for further information on modeling basis.

This calculation notebook is organized to include the following sections:

1) Overall BETHSY plant model. Most of this section is the appropriate sections from the ISL report and is to provide an overview of the BETHSY TRACE plant model. This part also includes some notes, highlighting the changes implemented in the current BETHSY TRACE model.

2) 3-D VESSEL Model. This section first provides an overview of the 3-D VESSEL model for the BETHSY pressure vessel and the arrangement of the HTSTRs coupled with the 3-D VESSEL component, followed by the detailed derivation of the parameters for each level and each HTSTR.

3) Steam Generator Model. The new steam generator model is based on the original steam generator model. This section details how the original model is modified to become the SG model used in this new TRACE input deck.

AdSTM
Advanced Systems Technology and Management, Inc.

CALCULATION WORK SHEET

Subject _____ Page ____/____
Prepared by _____ Checked by _____

Table of Content

1. An Overview of TRACE BEHTSY Plant Model ----------1
2. BETHSY Vessel Modeling ----------24
3. HTSTRs Coupled with the VESSEL ----------274
4. BEHTSY SG Model Development ----------311

AdSTM
Advanced Systems Technology and Management, Inc.

CALCULATION WORK SHEET

Subject BETHSY TRACE Plant Model Overview Page 1 1
Prepared by _____ Checked by _____

An Overview of TRACE BETHSY Plant Model

CALCULATION WORK SHEET

Subject BETHSY TRACE Plant Model Overview Page 2 1
Prepared by _____ Checked by _____

This section is intended to provide an overview of the BETHSY plant model. Most of this section is the appropriate sections from the ISL report. This part also includes some notes, highlighting the changes implemented in the current BETHSY TRACE model.

TRACE COMPARISON to BETHSY Test 9.1B (ISP-27)

Information Systems Laboratories, Inc.; Nuclear Systems Analysis Division
December 2003
Under Contract No. NRC-04-02-054
ISL-NSAD-TR-03-25

1. INTRODUCTION

BETHSY is an integral test facility located at the Nuclear Center of Grenoble, France, whose purpose is the investigation of PWR accident transients. The BETHSY program is jointly sponsored by the Commissariat A L'Energie Atomique, Electricite de France, and Framatome. Some of its objectives are to contribute to the physical bases of either event-oriented or state-oriented PWR Emergency Operating Procedures. Test 9.1B was a 2 in. cold leg break experiment with high pressure safety injection system (HPSI) assumed to be unavailable. This transient leads to a large core uncovery and fuel heat-up, requiring the implementation of an Ultimate Procedure (UP) which should be implemented as soon as the unavailability of HPSI is known. The UP was delayed and the following trigger criterion was used: when the maximum heater rod cladding temperature reaches 723 K, the three Steam Generator steam dumps to atmosphere are fully opened. This action allowed the primary coolant circuit to depressurize to the accumulator injection threshold and then to the low pressure injection system (LPIS) actuation. BETHSY Test 9.1B was used for international standard problem 27 (ISP-27).

2. BETHSY FACILITY DESCRIPTION

A facility and instrumentation description and a description of Test 9.1B is given in Reference 1 through Reference 5. The BETHSY integral test facility is a scaled down model of a three loop 900 MWe FRAMATOME PWR. The overall scaling factor applied to every volume, mass flowrate and power level is close to 1/100, while elevations are 1/1 in order to preserve the gravitational heads. The three loops are identical with the exception of the cold legs. The Loop 3 cold leg is slightly longer than in the other two loops. The steam generators were the inverted-U tube design. The core was composed of 428 electrically heated rods and 29 guide thimbles and were arranged according to the 17 x 17 core square lattice. The core is surrounded by a thin wall which simulates the core baffle. Core power was 2857 MW. An isometric sketch of the BETHSY hardware is shown in **Figure 2.0-1**. The vessel hardware included a vessel downcomer external to the vessel so that wall surface area could be minimized while maintaining the scaled downcomer flow area. 30 ± ~~MW~~. The vessel hardware included a vessel downcomer external to the vessel so that wall surface area could be minimized while maintaining the scaled downcomer flow area.

MS 3/27/04

TRACE COMPARISON to BETHSY Test 9.1B (ISP-27)

Information Systems Laboratories, Inc.; Nuclear Systems Analysis Division
December 2003
Under Contract No. NRC-04-02-054
ISL-NSAD-TR-03-25

1. INTRODUCTION

BETHSY is an integral test facility located at the Nuclear Center of Grenoble, France, whose purpose is the investigation of PWR accident transients. The BETHSY program is jointly sponsored by the Commissariat A l'Energie Atomique, Electricite de France, and Framatome. Some of its objectives are to contribute to the physical bases of either event-oriented or state-oriented PWR Emergency Operating Procedures. Test 9.1B was a 2 in. cold leg break experiment with high pressure safety injection system (HPSI) assumed to be unavailable. This transient leads to a large core uncovery and fuel heat-up, requiring the implementation of an Ultimate Procedure (UP) which should be implemented as soon as the unavailability of HPSI is known. The UP was delayed and the following trigger criterion was used: when the maximum heater rod cladding temperature reaches 723 K, the three Steam Generator steam dumps to atmosphere are fully opened. This action allowed the primary coolant circuit to depressurize to the accumulator injection threshold and then to the low pressure injection system (LPIS) actuation. BETHSY Test 9.1B was used for international standard problem 27 (ISP-27).

2. BETHSY FACILITY DESCRIPTION

A facility and instrumentation description and a description of Test 9.1B is given in **Reference 1** through **Reference 5**. The BETHSY integral test facility is a scaled down model of a three loop 900 MWe FRAMATOME PWR. The overall scaling factor applied to every volume, mass flowrate and power level is close to 1/100, while elevations are 1/1 in order to preserve the gravitational heads. The three loops are identical with the exception of the cold legs. The Loop 3 cold leg is slightly longer than in the other two loops. The steam generators were the inverted-U tube design. The core was composed of 428 electrically heated rods and 29 guide thimbles and were arranged according to the 17 x 17 core square lattice. The core is surrounded by a thin wall which simulates the core baffle. Core power was 2857 MW. An isometric sketch of the BETHSY hardware is shown in **Figure 2.0-1**. The vessel hardware included a vessel downcomer external to the vessel so that wall surface area could be minimized while maintaining the scaled downcomer flow area. 30 ± MW The vessel hardware included a vessel downcomer external to the vessel so that wall surface area could be minimized while maintaining the scaled downcomer flow area.

?

CALCULATION WORK SHEET

Subject BETHSY Plant Model Overview Page 3-01 /
Prepared by Checked by

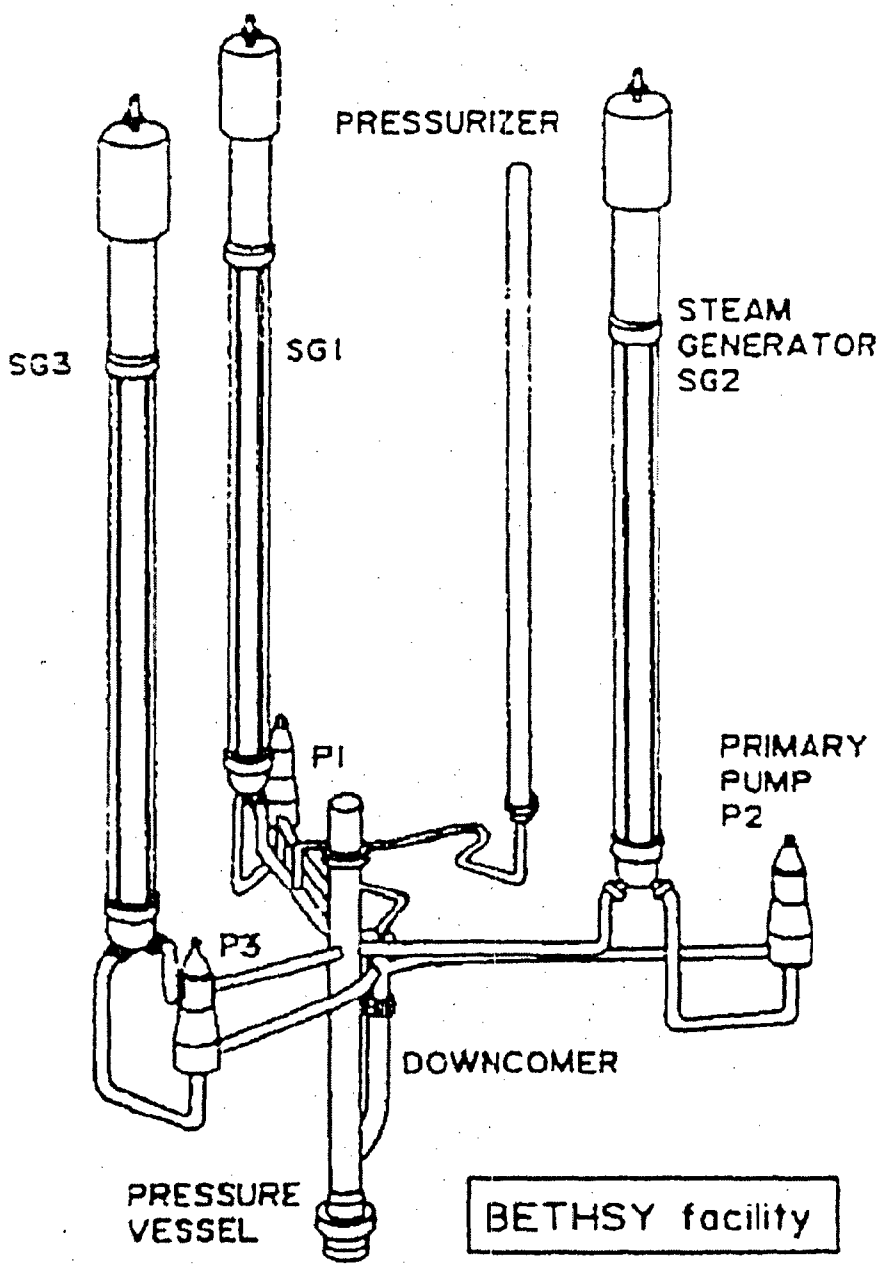

Figure 2.0-1 BETHSY experimental facility configuration.

3. TRACE Input Model

A TRACE input model of the BETHSY facility in the Test 9.1B configuration has been constructed and initialized to agree with the test conditions. The total number of components in the TRACE input model is 156. Noding diagrams of the TRACE model's vessel region, Loop1 primary and secondary piping and Loops 2 and 3 primary and secondary piping are shown in **Figure 3.0-1, Figure 3.0-2,** and **Figure 3.0-3** respectively. The 2 inch break is located in the Loop 1 cold leg. The component numbering scheme is: the 100 series for Loop 1 (including the pressurizer), 200 series for Loop 2, and 300 series for Loop 3. The Vessel region numbering scheme is the 400 series. The steam line header that is common to all three steam generators is component 500, the turbine valve is numbered 505. A steam dump valve that simulates the flow area of all three atmospheric dump valves is numbered 515. The LPSI is numbered 550 and 560 for loops 2and 3 respectively. The Loop 2 and 3 accumulators are numbered 224 and 324 respectively. The
break valve is numbered 135.

The starting point for the input model was a RELAP5 input file developed at the INEEL for the purpose of running ISP-27. The graphical user interface program named SNAP was used to convert the hydro and heat structure components into TRACE input format. The process involved the following steps: 1. Use SNAP to create a .rst file that is compatible with the TRACE code. The RELAP5 ACCUM components were not included in this step of the conversion process. TRACE spawns an accumulator internal check valve. SNAP does not recognize this internal spawned check valve, 2. A short TRACE run was made with the TRACE.rst file. The –usrTPR command line argument was used which creates a TRACE.tpr file that is readable in SNAP, 3. The TRACE.tpr file was processed through SNAP to make a TRACE format input file, 4. Since SNAP is not yet mature, several conversion errors needed correction in order for TRACE to process the input successfully. The control system was converted over to TRACE input format by hand.

The converted input file of the BETHSY facility contained several components that were combined into one component to simplify the input. For example, the RELAP5 input file and thus the converted TRACE input file contained seven components describing the lower plenum, the core, the upper plenum and the upper head in the vessel. These seven components were combined into one PIPE component. Connecting components such as the external downcomer and core bypass were connected to the PIPE using the nsides capability in TRACE. There were a few geometrical errors in the RELAP5 model that were corrected in the TRACE model. Some of these errors included pipe length differences from the reported values and pump metal mass.

(NOTE: this section provides background information about the development of the reference deck. The current TRACE model has 220 components. The vessel model in Figure 3.0-1 is replaced with a 3-D VESSEL component to be discussed in this calculation notebook. The loop primary loop models (Figure 3.0-2, and Figure 3.0-3) are still applicable except that the SG models are modified, which will be discussed in this notebook.)

3.1 Vessel Region

(NOTE: Much of the discussion in this section of the ISL report is not applicable because the BEHTSY pressure vessel is modeled with a 3-D VESSEL component. The VESSEL component and POWER component modeling will be discussed in detail in this calculation notebook.)

3.2 Primary Loops

The BETHSY facility contains three loops. These loops are nearly identical. The Loop 3 cold leg is a little longer than the other two loops. All three loops were modeled. Steady-state controllers were used to control the reactor coolant pump speed in each loop to obtain the desired loop mass flow rate. When the desired mass flow rate was obtained, the controllers were disabled and the pump speed set to the constant value calculated during the steady-state. The pumps were tripped on the SI signal with a 300 second delay. The pump coastdown curve was input into the PUMP components and included the 300 second delay.

3.3 Pressurizer

The pressurizer was modeled as a PIPE component and contained five cells. A constant pressure BREAK component was used to set the system pressure. A single junction component (SJC) valve was placed between the BREAK and the PIPE. The purpose of the valve was to isolate the constant pressure BREAK component at the initiation of the transient. The pressurizer surgeline was included as part of TEE 100. Rather large line resistances were needed in order to match the depressurization rate in the pressurizer during the transient. The timing of several events (scram, safety injection signal, etc.) key off of the pressurizer pressure. With smaller resistances these events occurred earlier in time.

3.4 Steam Generators

(NOTE: The steam model of the reference deck was modified in this work. The modeling information of the new steam generator will presented in this calculation notebook in detail.)

3.5 Feedwater System

The main and auxiliary feedwater system was modeled with FILL components. The main feedwater flow was held constant (about 0.52 kg/s) until the safety injection (SI) signal occurred when it was ramped to zero in 5 seconds. For steady state purposes a simple control system was used to match the feed flow with the steam line mass flow and the desired steam generator level (13.45 0.05 m). Once steady state conditions were achieved, an extract of the output was made via SNAP and the FILL component simulating the main feedwater response was changed to a constant mass flow until trip occurs.

The auxiliary feedwater operated on two signals. The initiation of the auxiliary feedwater was a 30 second delay after the SI signal. The maximum capacity of the auxiliary feedwater was 305 cm3/s. Up to the initiation of UP,

the auxiliary feedwater operated on the steam generator liquid level using the following control parameters and thresholds:

Flow = 305 cm^3/s for SGLevel < 13.32 m
Flow = 305.0 –760.0 × (SGLevel – 13.32) for 13.32 m ≤ SGLevel < 13.72 m
Flow = 0.0 for SGLevel ≥ 13.72 m

After UP initiation the auxiliary feedwater operated using the following control parameters and thresholds:

Flow = 305 cm^3/s for SGLevel < 13.14 m
Flow = 305.0 –1450.0 × (SGLevel – 13.14) for 13.14 m ≤ SGLevel < 13.35 m
Flow = 0.0 for SGLevel ≥ 13.35 m

These control parameters were modeled with control blocks and fed into the FILL components representing the auxiliary feedwater.

3.6 Steam Dump Valves

The turbine valve (VAGV4) closes on the SI signal. The pressure in the secondary side increases to the set pressure of the steam line atmospheric dump valves. At the initiation of UP a larger single atmospheric dump valve (VAGV3) common to all three steam generators is opened and the secondary side blows down. The larger single atmospheric valve simulates the opening of all three steam line atmospheric dump valves. Both the steam line dump valves and the larger single atmospheric dump valve are modeled. There was sufficient information to model the large atmospheric dump valve, but not the individual steam line dump valves. An estimation of the area of these valves was deduced from the size of the large atmospheric dump valve. The opening and closing set pressures of these valves was deduced from the measured steam dome pressure response and the steam line mass flow rate. A comparison of the calculated and measured steam dome pressure shows the dump valves are modeled reasonably. Better information on these valves would be useful in order to model their behavior more accurate.

3.7 Fluid Volume and Mass

Volume and mass information of each of the components is presented in **Table 3.7-2**. Naturally the vessel region contains the largest fraction of the primary side fluid. The table is in two sections: the primary side components and the secondary side components. The reported primary side mass inventory was 1960 40 kg. The calculated primary side mass inventory is 1947.46 kg. The secondary side mass inventory per steam generator was reported as 820 30 kg. The calculated secondary side mass inventory per steam generator is 811.54 kg.

The current input deck does not contain control blocks that calculate the mass inventory of the VESSEL component. Instead, the initial mass in the current vessel model is obtained from the TRACE output file and is compared to the values given in Table 3.7-2 of the ISL report as follows:

According to Table 3.7-2,

Vessel Fluid Mass = Mass (PIPE 420 + PIPE 400 + PIPE 425)
Vessel Downcommer Core Bypass
= 523.747 + 211.818 + 43.862
= 779.427 Kg

Initial Vessel Fluid Mass (from TRACE calculation)

Vessel Fluid Mass = Mass (VESSEL 420 + PIPE 400) = 658.936 + 123.66 = 782.6Kg

3 Heat Slabs

The initial input has 93 HTSTR components. HTSTR component number 925 represents the core heater rods.

A list of all HTSTR component numbers, number of axial zones, number of radial nodes and connection information is shown in **Table 3.8-3.**

The BETHSY hardware contained electrical trace heating to compensate for heat losses. Trace heating was located on every component and piping of the primary coolant system except for the downcomer to upperhead bypass, the primary coolant pumps, and the hot and cold leg spool pieces. The steam generators also contained trace heaters on every component except for the external downcomers. Steady state tests were made with the experimental facility to determine the heat loss of the system. Results showed an overall heat transfer coefficient of 3.1 W/m2 oC for both the primary and secondary systems except the pressurizer and pressurizer surgeline. A separate steady state test was performed with the experimental facility to determine the overall heat transfer coefficient for the pressurizer and connecting surgeline. That coefficient was calculated to be 2.1 W/m2 oC. The trace heater power was kept constant during the test until accumulator injection when it was shut down to zero.

In the BETHSY input deck, system heat loss was considered only after the initiation of accumulator injection. This was accomplished by setting the IDBCON parameter in the HTSTR components to 4 (heat transfer coefficient is specified by table of heat transfer coefficient versus independent variable; sink temperature is specified by sink temperature versus independent variable) and using a trip (402) and signal variable (4) to ivate the system heat loss at the time. The calculated overall heat transfer coefficients from the data were used as input general heat structure table section the input model. A constant sink temperature of 300 assumed.

K in

The current input deck does not contain control blocks that calculate the mass inventory of the VESSEL component. Instead, the initial mass in the current vessel model is obtained from the TRACE output file and is compared to the values given in Table 3.7-2 of the ISL report as follows:

According to Table 3.7-2,

Vessel Fluid Mass = Mass (PIPE 420 + PIPE 400 + PIPE 425)
Vessel Downcommer Core Bypass
= 523.747 + 211.818 + 43.862
= 779.427 Kg

Initial Vessel Fluid Mass (from TRACE calculation)

Vessel Fluid Mass = Mass (VESSEL 420 + PIPE 400) = 658.936 + 123.66 = 782.6Kg

3 Heat Slabs

The initial input has 93 HTSTR components. HTSTR component number 925 represents the core heater rods.

A list of all HTSTR component numbers, number of axial zones, number of radial nodes and connection information is shown in **Table 3.8-3**.

The BETHSY hardware contained electrical trace heating to compensate for heat losses. Trace heating was located on every component and piping of the primary coolant system except for the downcomer to upperhead bypass, the primary coolant pumps, and the hot and cold leg spool pieces. The steam generators also contained trace heaters on every component except for the external downcomers. Steady state tests were made with the experimental facility to determine the heat loss of the system. Results showed an overall heat transfer coefficient of 3.1 W/m2 oC for both the primary and secondary systems except the pressurizer and pressurizer surgeline. A separate steady state test was performed with the experimental facility to determine the overall heat transfer coefficient for the pressurizer and connecting surgeline. That coefficient was calculated to be 2.1 W/m2 oC. The trace heater power was kept constant during the test until accumulator injection when it was shut down to zero.

In the BETHSY input deck, system heat loss was considered only after the initiation of accumulator injection. This was accomplished by setting the IDBCON parameter in the HTSTR components to 4 (heat transfer coefficient is specified by table of heat transfer coefficient versus independent variable; sink temperature is specified by sink temperature versus independent variable) and using a trip (402) and signal variable (4) to activate the system heat loss at the time. The calculated overall heat transfer coefficients from the data were used as input general heat structure table section the input model. A constant sink temperature of 300 assumed.

Units?

CALCULATION WORK SHEET

Subject BETHSY TRACE Plant Model Overview Page 7-011
Prepared by _____ Checked by _____

(NOTE: the discussion in this section is largely applicable except that 1) the number of HTSTRs is 153; 2) HTSTRs associated the BETHSY pressure vessel and steam generators are changed, which will be discussed in detail later).

CALCULATION WORK SHEET

Subject BETHSY TRACE Plant Model Overview Page 8 1
Prepared by _____ Checked by _____

Table 3.7-2 Hydraulic Components in the BETHSY model

Component Type	Component Number	Component Function	Fluid Volume (m3)	Initial Fluid Mass (kg)
PIPE	200	Loop 2 hot leg. Inlet junction connects to PIPE 420 of the vessel components.	0.04909	36.5084
PIPE	205	Loop 2 SG inlet plenum, U-tubes, and SG outlet plenum	0.27128	202.906
PIPE	210	Loop 2 pump suction	0.08161	61.275
PUMP	215	Loop 2 pump	0.02070	15.5463
TEE	220	Loop 2 cold leg, side arm connects to the LPSI	Primary side 0.01508	Primary side 11.32810
TEE	221	Loop 2 cold leg, outlet junction connects to PIPE 400 of the vessel components. Side arm connects to the Accumulator.	Primary Side 0.02570	Primary side 19.30584
VALVE	223	Accumulator valve	none	
PIPE	224	Loop 2 Accumulator	0.423	284.048
FILL	550	Loop 2 LPSI	none	
Primary Side - Loop 3				
PIPE	300	Loop 3 hot leg. Inlet junction connects to PIPE 420 of the vessel components.	0.04909	36.5084
PIPE	305	Loop 3 SG inlet plenum, U-tubes, and SG outlet plenum	0.27128	202.906
PIPE	310	Loop 3 pump suction	0.08161	61.275
PUMP	315	Loop 3 pump	0.02070	15.5463
TEE	320	Loop 3 cold leg, side arm connects to the LPSI	Primary side 0.01508	Primary side 11.32810
TEE	321	Loop 2 cold leg, outlet junction connects to PIPE 400 of the vessel components. Side arm connects to the Accumulator.	Primary side 0.0257	Primary side 19.30584
VALVE	323	Accumulator valve	none	
PIPE	324	Loop 3 Accumulator	0.423	286.586

CALCULATION WORK SHEET

Subject BETHSY TRACE Plant Model Overview Page 9 1
Prepared by _____ Checked by _____

Component Type	Component Number	Component Function	Fluid Volume (m3)	Initial Fluid Mass (kg)
FILL	560	Loop 3 LPSI	none	
Vessel components				
PIPE	400	Vessel downcomer and downcomer to upper head bypass	0.282	211.818
PIPE	420	Lower plenum, core, upper plenum and upper head	0.69934	523.747
PIPE	425	Core bypass	0.05849	43.862
PIPE	445	guide tube flow path	0.00802553	6.02742
			Primary side total mass[a]	1947.46
Secondary Side - Steam Generator 1				
PIPE	150	Loop 1 Steam Generator boiler region, steam separator and steam dome	1.44422	526.171
PIPE	155	Loop 1 Steam Generator secondary side downcomer	0.50816	285.368
			Steam Generator 1 secondary side mass	811.54
PIPE	160	Loop 1 Steam Generator steam line	0.06851	2.461
VALVE	162	Loop 1 Steam Generator steam line atmospheric dump valve	none	
BREAK	164	atmospheric pressure	none	
FILL	170	Loop 1 SG Main Feedwater	none	
FILL	180	Loop 1 SG Auxiliary Feedwater	none	
Secondary Side - Steam Generator 2				
PIPE	250	Loop 2 Steam Generator boiler region, steam separator and steam dome	1.44422	526.172
PIPE	255	Loop 2 Steam Generator secondary side downcomer	0.50816	285.367
			Steam Generator 2 secondary side mass	811.54

CALCULATION WORK SHEET

Subject BETHSY TRACE Plant Model Overview Page 10 1
Prepared by _____ Checked by _____

Component Type	Component Number	Component Function	Fluid Volume (m3)	Initial Fluid Mass (kg)
PIPE	260	Loop 2 Steam Generator steam line	0.06851	2.46078
VALVE	262	Loop 2 Steam Generator steam line atmospheric dump valve	none	
BREAK	264	atmospheric pressure	none	
FILL	270	Loop 2 SG Main Feedwater	none	
FILL	280	Loop 2 SG Auxiliary Feedwater	none	
Secondary Side - Steam Generator 3				
PIPE	350	Loop 3 Steam Generator boiler region, steam separator and steam dome	1.44422	526.172
PIPE	355	Loop 3 Steam Generator secondary side downcomer	0.50816	285.366
		Steam Generator 3 secondary side mass		811.54
PIPE	360	Loop 3 Steam Generator steam line	0.06851	2.46079
VALVE	362	Loop 3 Steam Generator steam line atmospheric dump valve	none	
BREAK	364	atmospheric pressure	none	
FILL	370	Loop 3 SG Main Feedwater	none	
FILL	380	Loop 3 SG Auxiliary Feedwater	none	
Steam line common header, isolation valve, and large atmospheric dump valve				
PIPE	500	Steam line common header	0.006495	0.233259
VALVE	505	turbine valve	none	
BREAK	510	Condenser	none	
VALVE	515	Atmospheric dump valve (used for UP - valve area simulates opening of the atmospheric dump valves on each line)	none	
BREAK	520	Atmosphere	none	

a. Does not include accumulators or accumulator lines

CALCULATION WORK SHEET

Subject BETHSY TRACE Plant Model Overview Page 11 / 1
Prepared by _____ Checked by _____

Table 3.8-3 HTSTR component connections

HTSTR Component Number	Number of Axial Zones	Number of Radial Nodes	Connected to Hydraulic Component Number
600	7	4	TEE 100
601	9	4	TEE 100
604	1	4	PIPE 105
605	14	4	PIPE 105
606	1	4	PIPE 105
607	1	4	PIPE 105
610	18	4	PIPE 110
615	2	4	PUMP 115
620	8	4	TEE 120 and PIPE 121
624	1	4	PIPE 125
625	3	4	PIPE 125
626	1	4	PIPE 125
650	2	4	PIPE 150
651	6	4	PIPE 150
652	1	4	PIPE 150
653	9	4	PIPE 150
654	7	4	PIPE 150
655	3	4	PIPE 150 and PIPE 155
656	1	4	PIPE 150
657	1	4	PIPE 150
658	1	4	PIPE 155
659	1	4	PIPE 155
660	1	4	PIPE 155

CALCULATION WORK SHEET

Subject BETHSY TRACE Plant Model Overview Page 12 1
Prepared by _____ Checked by _____

Table 3.8-3 HTSTR component connections (Continued)

HTSTR Component Number	Number of Axial Zones	Number of Radial Nodes	Connected to Hydraulic Component Number
661	5	4	PIPE 155
662	7	4	PIPE 160
700	7	4	PIPE 200
704	1	4	PIPE 205
705	14	4	PIPE 205
706	1	4	PIPE 205
707	1	4	PIPE 205
710	18	4	PIPE 210
715	2	4	PIPE 215
720	8	4	TEE 220 and TEE 221
750	2	4	PIPE 250
751	6	4	PIPE 250
752	1	4	PIPE 250
753	9	4	PIPE 250
754	7	4	PIPE 250
755	3	4	PIPE 250 and PIPE 255
756	1	4	PIPE 250
757	1	4	PIPE 250
758	1	4	PIPE 255
759	1	4	PIPE 255
760	1	4	PIPE 255
761	5	4	PIPE 255
762	7	4	PIPE 260
800	7	4	PIPE 300
804	1	4	PIPE 305
805	14	4	PIPE 305
806	1	4	PIPE 305

CALCULATION WORK SHEET

Subject BETHSY TRACE Plant Model Overview Page 131
Prepared by _____ Checked by _____

Table 3.8-3 HTSTR component connections (Continued)

HTSTR Component Number	Number of Axial Zones	Number of Radial Nodes	Connected to Hydraulic Component Number
807	1	4	PIPE 305
810	18	4	PIPE 310
815	2	4	PIPE 315
820	8	4	TEE 320 and TEE 321
850	2	4	PIPE 350
851	6	4	PIPE 350
852	1	4	PIPE 350
853	9	4	PIPE 350
854	7	4	PIPE 350
855	3	4	PIPE 350 and PIPE 355
856	1	4	PIPE 350
857	1	4	PIPE 350
858	1	4	PIPE 355
859	1	4	PIPE 355
860	1	4	PIPE 355
861	5	4	PIPE 355
862	2	4	PIPE 360
900	1	4	PIPE 400
901	1	4	PIPE 400
902	1	4	PIPE 400
903	1	4	PIPE 400
904	1	4	PIPE 400
905	1	4	PIPE 400, PIPE 420
910	1	4	PIPE 400
911	6	4	PIPE 400
912	1	4	PIPE 400
913	1	4	PIPE 400

Table 3.8-3 HTSTR component connections (Continued)

HTSTR Component Number	Number of Axial Zones	Number of Radial Nodes	Connected to Hydraulic Component Number
914	1	4	PIPE 400
915	1	4	PIPE 400, PIPE 420
920	1	4	PIPE 420
921	1	4	PIPE 420
922	1	4	PIPE 420
925	14	8	PIPE 420
926	1	4	PIPE 420
927	1	4	PIPE 420
928	16	4	PIPE 420, PIPE 425
929	1	4	PIPE 425
930	1	4	PIPE 425
931	14	4	PIPE 425
935	1	4	PIPE 420
936	1	4	PIPE 420
937	1	4	PIPE 420
940	1	4	PIPE 420

3.9 External Heat Losses

Heat transfer from the piping to the environment was compensated for by the facility by suppling power to trace heaters. However, at accumulator injection initiation, they were turned off. From that time on, heat loss to the environment is calculated. The computer model accounts for this action as noted in **Section 3.8**.

3.10 CCFL Model

Counter current flow limiting logic was not applied anywhere.

3.11 Choking Model

The namelist variable icflow was set = 1. This TRACE code option utilizes the default choked flow multipliers and the choked flow model was checked only at junctions connecting BREAK components.

(NOTE: in the current, model icflow = 2 and icflg is set 1 at the break valve junctions (valve 135, 515, 162, 262 and 362).

3.12 Level Tracking Model

The level tracking model was not used in the 1-D components.

3.13 Reflood Model

The reflood model was not used since it is currently under reconstruction.

(NOTE: newrfd = 1 in the current deck)

3.14 Offtake Model

The offtake model is active for the side junction of TEE 120 leading to the break, ientrn = 1 and also setting the namelist variable iofftk = 1.

.15 Trips

The model includes 11 trips. A Pressurizer component 930 low pressure of 12.6 MPa activated several trips. Trip data is given in **Table 3.15-4**.

Table 3.15-4 Trip information

Trip #	Trip Title	Observed Variable	Set Point	Approached From	Delay Time (s)	Monitoring Component	Cell Number	Component Using Trip
162	SG1 SRV set point	Pressure (MPa)	7.12, 6.675	below	0.0	150	12	162

Trip #	Trip Title	Observed Variable	Set Point	Approached From	Delay Time (s)	Monitoring Component	Cell Number	Component Using Trip
262	SG2 SRV set point	Pressure (MPa)	7.12, 6.675	below	0.0	250	12	262
362	SG3 SRV set point	Pressure (MPa)	7.12, 6.675	below	0.0	350	12	362
401	Accumulator trip valve	Pressure (MPa)	4.16, 1.50	above	0.00	125	5	sv-401, 223, 323
402	Trace heater trip	Pressure (MPa)	12.6	above	0.0	125	5	sv-4, All HTSTRs using Gen Table 2
404	Always False	Time (s)	1.0e+6	below	0.00	NA	NA	505, 515
405	Break	Time (s)	0.0	below	0.0	NA	NA	135, 126
425	Core Over-temperature	Temperature (K)	723.0	below	0.00	925	1 - 14	515, sv-725
440	Scram	Pressure (MPa)	13.1 MPa	above	0.0	125	5	999
450	SI signal	Pressure (MPa)	11.9	above	0.0	125	5	115, 170, 215, 270, 315, 370, 505
451	SI signal	Pressure (MPa)	11.9	above	30.0	125	5	180, 280, 380

4. CONTROL SYSTEM

Two control system models were used during steady state calculations to drive the TRACE model to the desired steady state initial conditions. The control systems are: primary loop flow controllers and steam generator

secondary side level controllers. Diagrams of the control blocks for primary Loop 1 mass flow and Steam Generator 1 secondary side level are shown in **Figure 4.0-1** and **Figure 4.0-2** respectively. The controllers for the other loops are identical.

Numbers with a negative in front refer to control blocks. Positive numbers refer to signal variables. Steady state controller target set points are given in **Table 4.0-1**.

During the transient the auxiliary feedwater flow rate is controlled based on the steam generator secondary side level. **Section 3.5** presented the control parameters and thresholds used for the auxiliary feedwater. A diagram of the control blocks for the auxiliary feedwater control for Steam Generator 1 is shown in **Figure 4.0-3**. Control blocks for the auxiliary feedwater control in Steam Generators 2 and 3 are the same.

Table 4.0-1. Steady state controller set points.

Description	Set Point	Control Block[a]
primary loop mass flow rate (kg/sec)	51.0	-901, -911, -921
steam generator secondary level (m)	13.45	-816, -826, -836

a. Loops 1, 2, and 3 respectively

REFERENCES

1. Document collectif, Equipe BETHSY, "BETHSY General Description", SETh/LES/90-97, April 1990.
2. P. Bazin, "BETHSY: Data Base", SETh/LES/82-28, March 1988.
3. Ph. Gully and R Deruaz, "BETHSY - Measurment System", SETh/LES/87-27, October 1987.
4. Report Update, Report SETh/LES/87-27 update, April 1990.
5. OECD/NEA/CSNI International Standard Problem No. 27, "BETHSY Experiment 9.1B 2" Cold Leg Break without HPSI and with Delayed Ultimate Proceedure", Comparison Report, Volume 1, NEA/CSNI/R(R92)20, November 1992.

CALCULATION WORK SHEET

Subject BETHSY TRACE Plant Model Overview Page 18 /
Prepared by Checked by

FIGURES

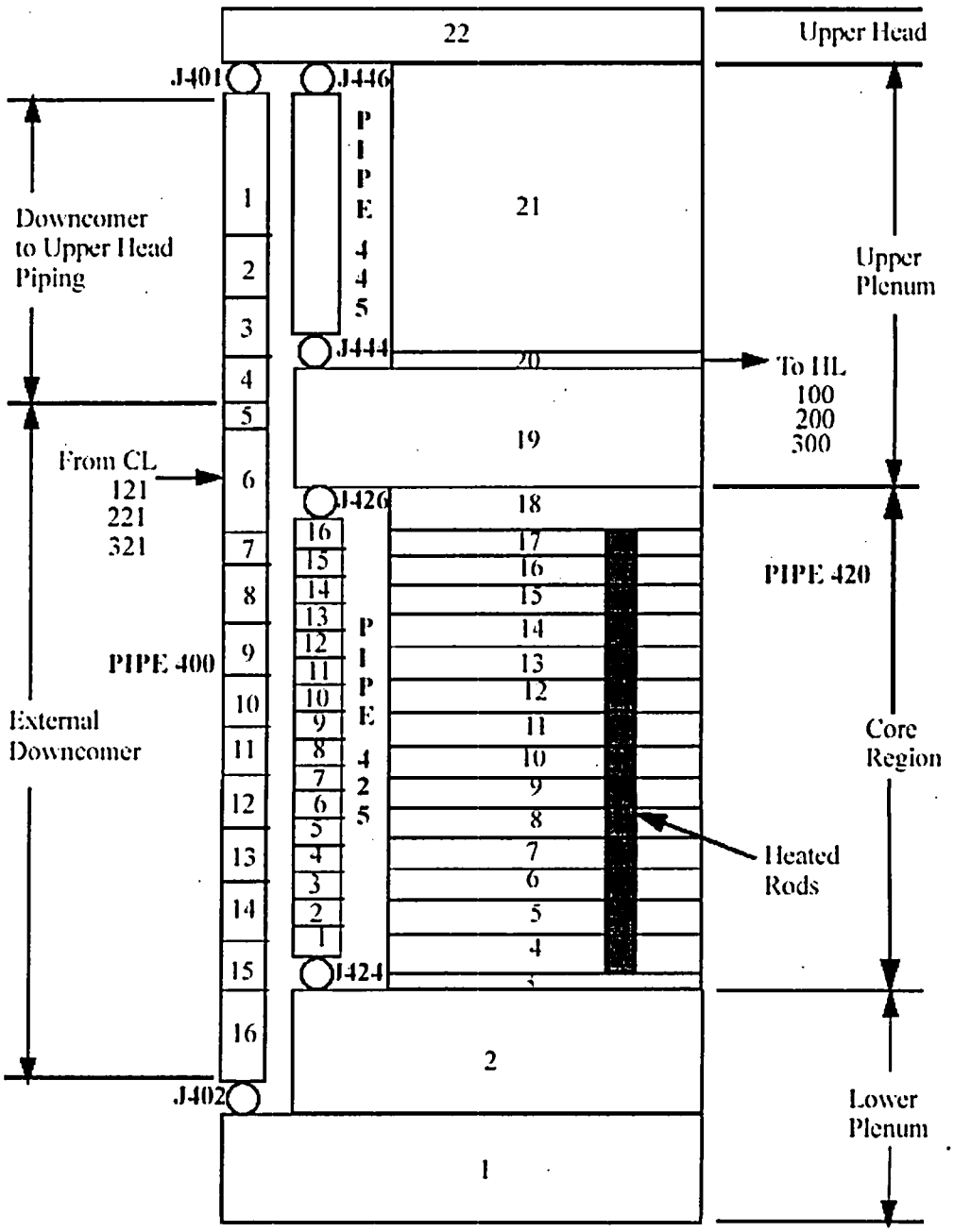

Figure 3.0-1 TRACE input noding of the BETHSY vessel region.

CALCULATION WORK SHEET

Subject BETHSY TRACE Plant Model Overview Page 191
Prepared by _____ Checked by _____

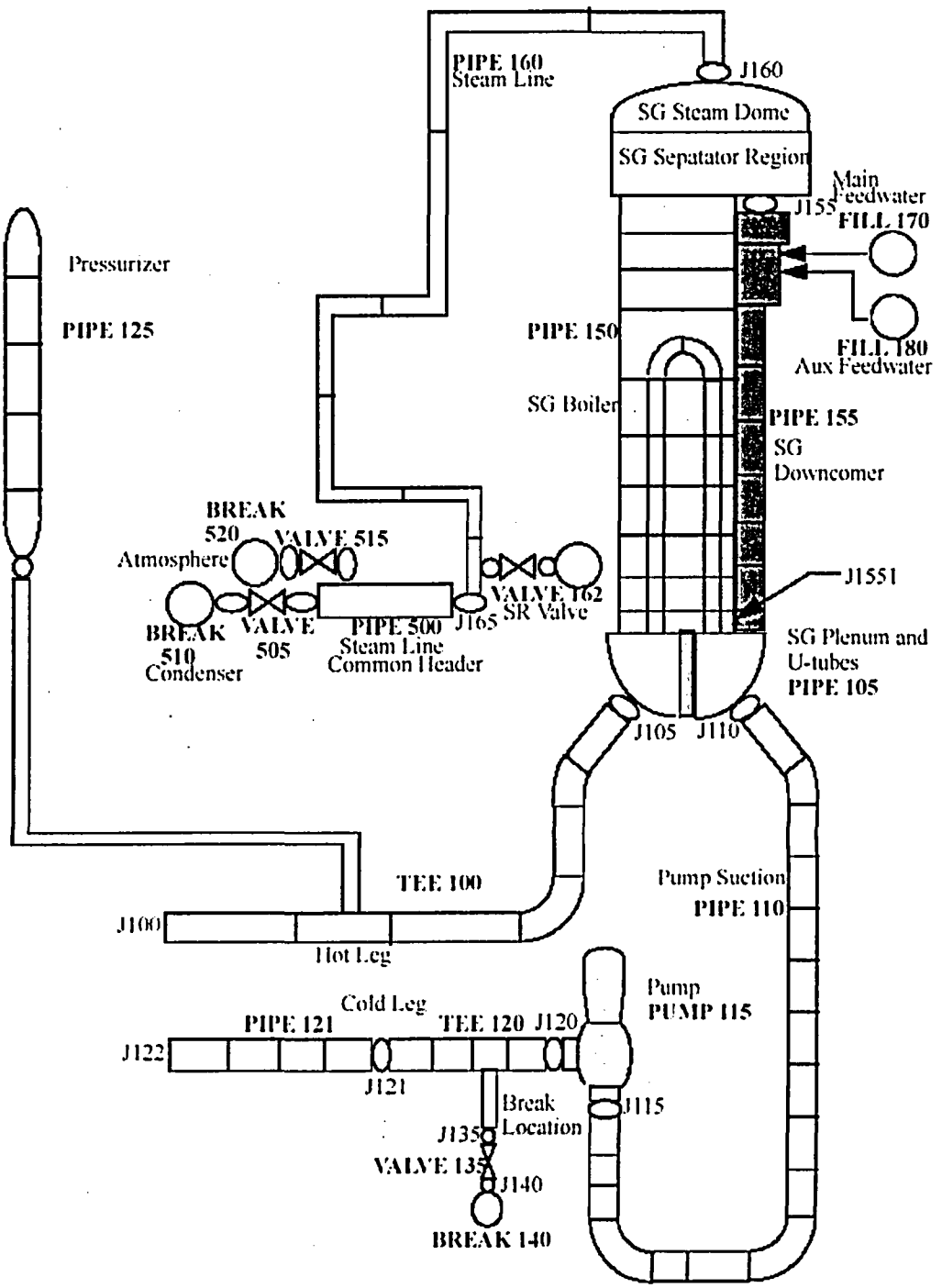

Figure 3.0-2 TRACE input noding of BETHSY Loop 1 primary and secondary piping.

CALCULATION WORK SHEET

Subject BETHSY TRACE Plant Model Overview Page 20 /
Prepared by _____ Checked by _____

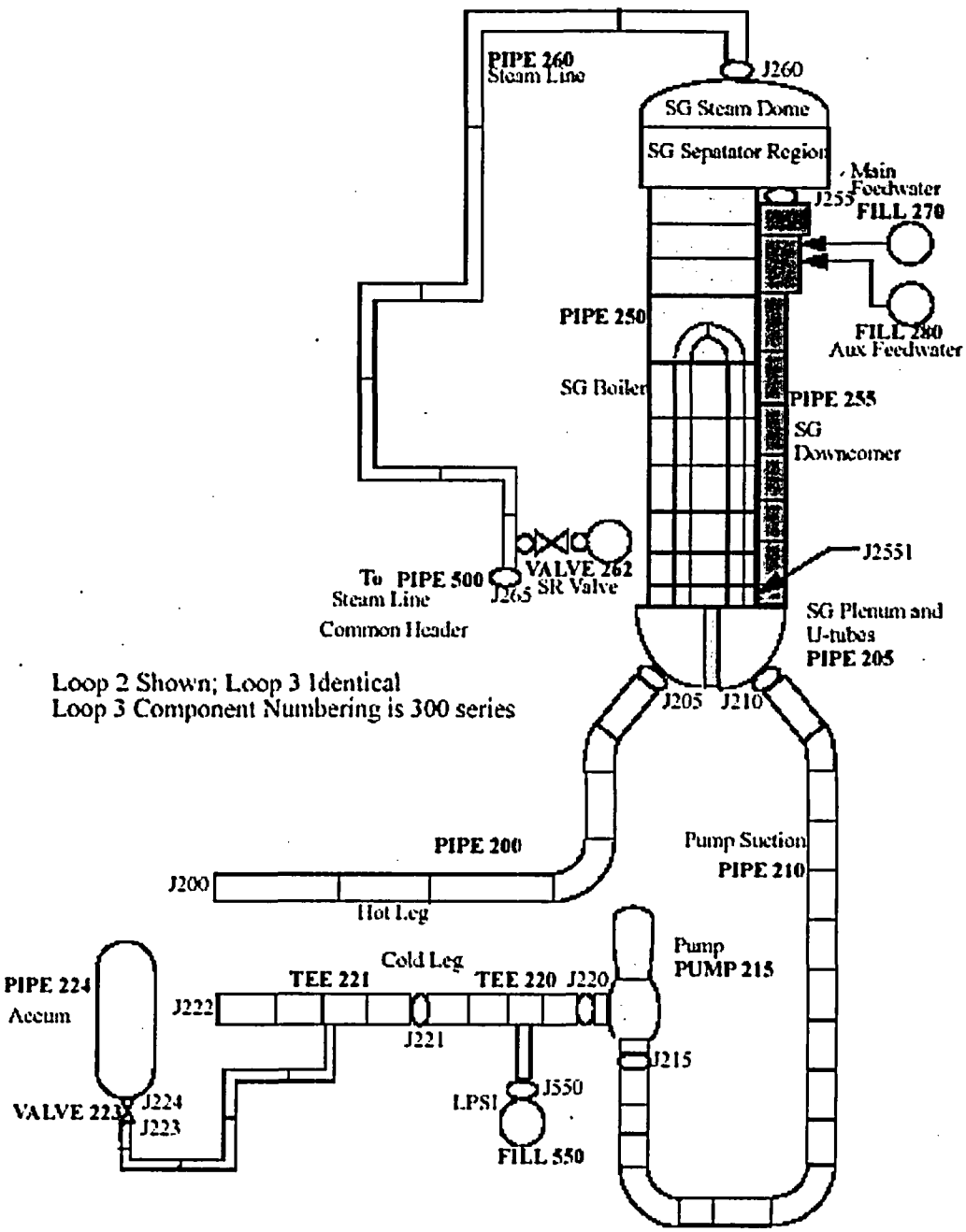

Figure 3.0-3 TRACE input noding of BETHSY Loops 2 and 3 primary and secondary piping.

CALCULATION WORK SHEET

Subject BETHSY TRACE Plant Model Overview Page 21 1
Prepared by _____ Checked by _____

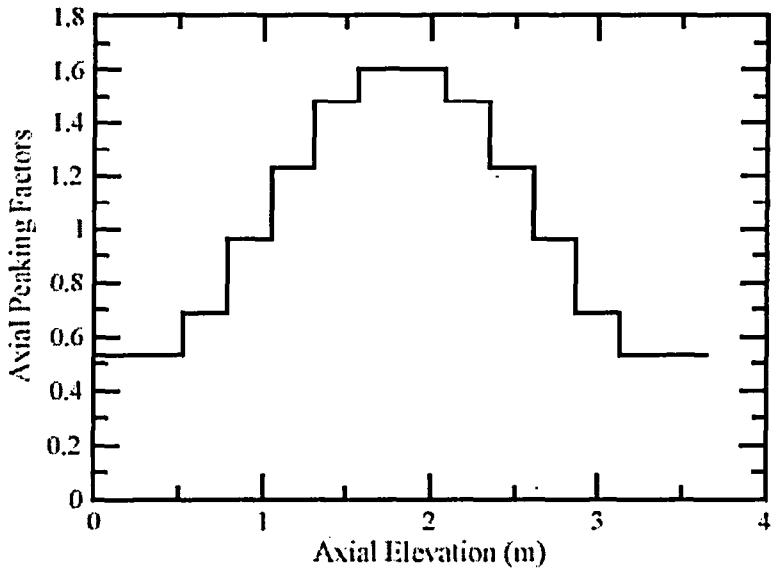

Figure 3.1-4 Axial power peaking factor.

(The power distribution is uniform in the radial direction)

PRIMARY LOOP PUMP CONTROLLER

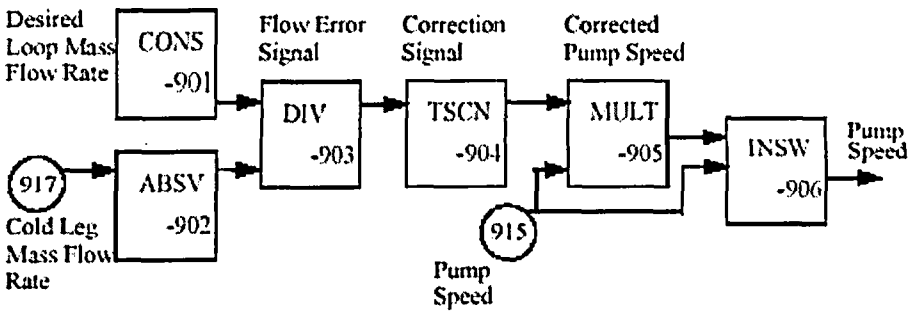

Figure 4.0-1 Steady state loop flow controllers.

CALCULATION WORK SHEET

Subject BETHSY TRACE Plant Model Overview Page 22 /
Prepared by _____ Checked by _____

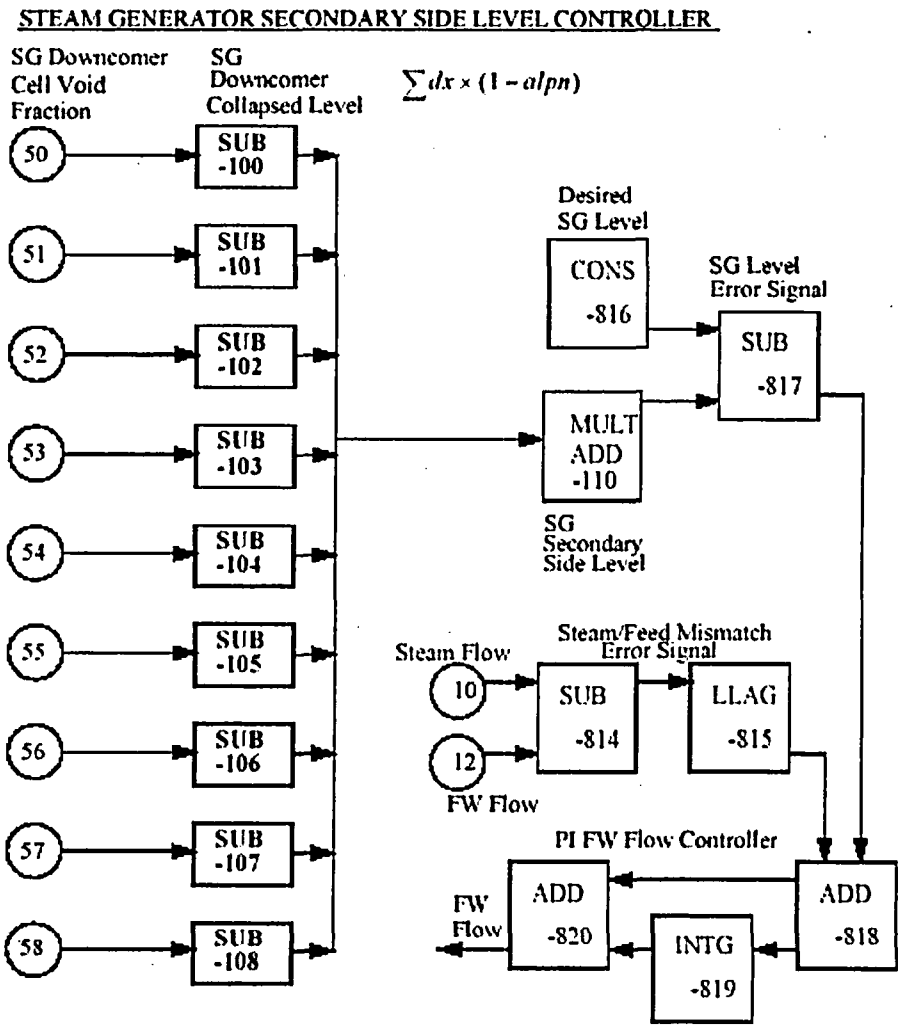

Figure 4.0-2 Steady state steam generator secondary side level controllers.

CALCULATION WORK SHEET

Subject BETHSY TRACE Plant Model Overview Page 23 /
Prepared by _____ Checked by _____

STEAM GENERATOR AUXILLERY FEEDWATER FLOW CONTROLLER

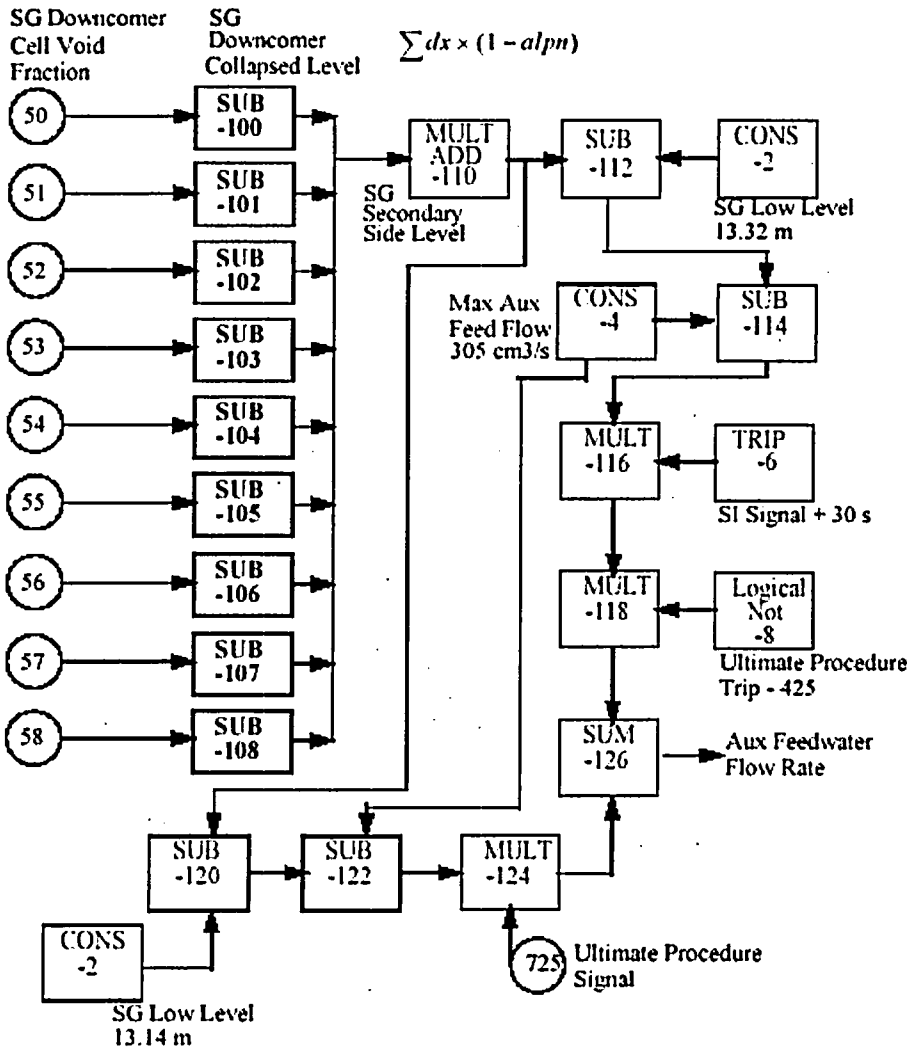

Figure 4.0-3 Steam generator auxiliary feedwater flow controllers.

AdSTM
Advanced Systems Technology and Management, Inc.

CALCULATION WORK SHEET

Subject _____ Page 24 /
Prepared by _____ Checked by _____

BETHSY Vessel Modeling - Overview

The nodalization diagram modeling the BETHSY pressure vessel is given in Figure 1. PIPE 400 models the external portion of the BEHTSY pressure vessel downcomer. VESSEL 420 model the lower plenum, core section, upper plenum and upper head. The model parameters are based on the information provided in the documents:

Reference 1 - BETHSY Data Base, SETh/LES/87-28
Reference 2 - General Description, SETh/LES/87-27
Reference 3 - Measurement System, SETh/LES/87-27
Reference 4 - TRACE Comparison to BETHSY Test 9.1B (ISP-27) - by ISL

In addition, the input deck for the above Reference 4 is used as a reference deck in our current work. The following discussion provides an overall view of the TRACE Vessel Model for the BEHTSY pressure vessel.

- VESSEL (420)

The VESSEL nodalization is shown in Figure 1 . It is used to model: 1) downcomer section (annular) inside the vessel; 2) lower plenum; 3) core; 4) core bypass; 5) upper plenum; and 6) upper head. The VESSEL model is made up of 24 levels, 5 rings and 3 sectors. Five rings accommodate the lower plenum, core bypass and upper plenum structure. Three sectors are used, considering that three hot legs are connected to the vessel.

Lower Plenum

The lower plenum is modeled with four levels (L1 - L4):

- o Level 1 corresponds to V1 as shown on the schematic of the BETHSY Vessel (Figure 3)
- o Level 2 corresponds to V2+V3+V4
- o V5 is split into L3 and L4. Ring 4 of L3 and L4 represents the annular downcomer section. The external downcomer pipe is connected to the annular downcomer at level 4 as shown in the nodalization scheme. The cells in Ring 5 of L3 and L4 are null cells (no flow in or out).

CALCULATION WORK SHEET

Core Section

The core section comprises of 9 levels (L5-L13), specifically

- o Levels from L6 to L12 correspond to the heated section of the heater rods.
- o The BETHSY core was provided with 9 spacer grids. Except for the first spacer grid at the core inlet, their locations correspond to related level boundary locations in the VESSEL model.
- o R1 and R2 represent the core section. The core power is uniform in radial direction and the core could be represented by one ring. A second ring is introduced mainly to accommodate the internal structure at the upper portion of the upper plenum.
- o R3 is used to represent the core bypass (volume between the core baffle and the vessel inner wall).
- o Cells in R4 and R5 are null cells (no flow in or out)

Upper Plenum

The upper plenum comprises of 10 levels (L14-L23). The upper plenum provides sources (junctions) connecting the VESSEL to hotlegs (3 sources), RCC guide tubes and upper head-downcomer leakage path:

- o Hot leg connections are located at Level 17 and outer surface of R3, with each connected to one sector.
- o The upper boundary of Level 16 provides three sources, with each in one sector of R1, to connect 3 PIPE components representing the RCC guide tube.
- o The annular volume - V25 (connected to the pipe simulating the leakage path from downcomer to the upper head) is represented with Ring 4 at Levels 20 and 21 (Figures 1 and 3). Physically, V5 was inside the vessel wall. However, Ring 3 cannot accommodate the flow area of V5 in z direction. In the vessel model, V25 is shifted to Ring 4. Another alternative modeling approach is also under consideration, which is to use a pipe to represent V25.

Upper head

The upper head comprises of level 24 and Rings 2, 3 and 4 of levels 22-23. The lower boundary of Level 24 provides three sources, with each in one sector of R1, to connect 3 PIPE components representing the RCC guide tube.

- External Downcomer (PIPE 400)

As shown in Figure 1, PIPE 400 models the external portion of the downcomer of the BETHSY Vessel. PIPE 400 is taken from the PIPE 400 of the reference input deck. Cells 1-13 of PIPE 400 in this new vessel model correspond to Cells 3-15 of PIPE 400 of the reference card respectively.

- Heat Structures Coupled with Vessel 420

The BETHSY Vessel heater rods and internal structures are represented with TRACE powered and non-powered HTSTR components. The arrangement of the HTSTRs coupled with the VESSEL component is schematically shown in Figure 2. Table 1 lists the component numbers assigned to these HTSTRs and their functions.

CALCULATION WORK SHEET

Subject _____ Page 28 /
Prepared by _____ Checked by _____

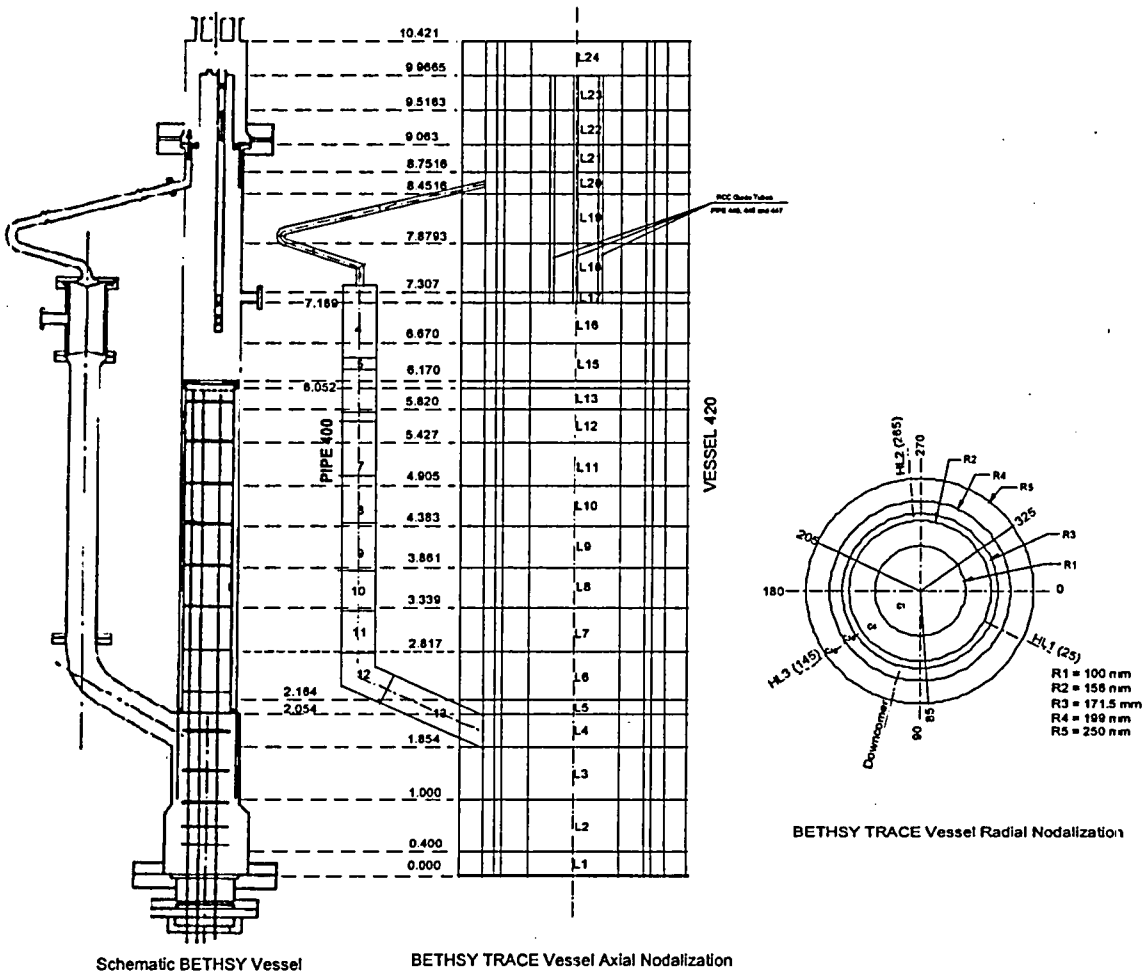

Schematic BETHSY Vessel

BETHSY TRACE Vessel Axial Nodalization

BETHSY TRACE Vessel Radial Nodalization

Figure 1 : TRACE BETHSY Vessel Model

CALCULATION WORK SHEET

Subject _____ Page 29 /
Prepared by _____ Checked by _____

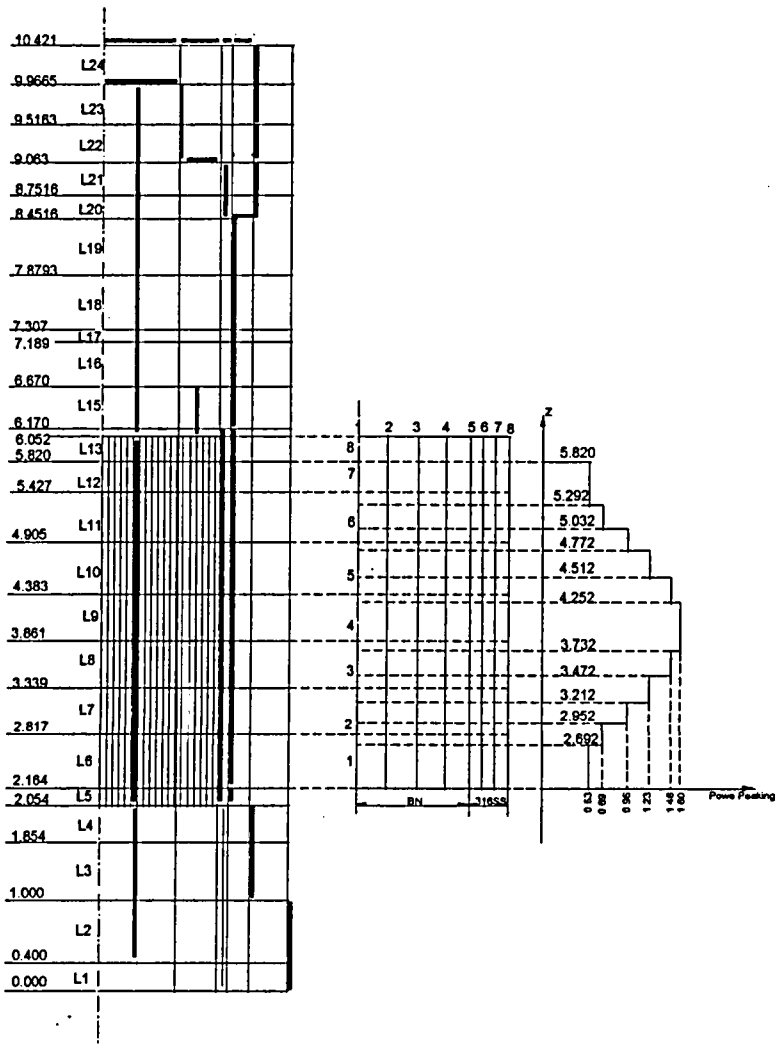

Figure 2 : Arrangement of HTSTRs Coupled with TRACE BETHSY VESSEL Component (Vessel 420)

CALCULATION WORK SHEET

Subject _____ Page 30 1
Prepared by _____ Checked by _____

Table 1: List of HTSTR Coupled with VESSEL 420

HTSTRs	Description
928, 956, 957	core baffle
920, 959, 960	vessel wall 0.000-1.000m
922, 962, 963	vessel wall 1.000-2.054m
964, 965, 966	vessel wall 2.054-2.164m
931, 968, 969	vessel wall 2.164-6.170m
935, 971, 972	vessel wall 6.170-7.189m
936, 974, 975	vessel wall 7.189-7.307m
937, 976, 977	vessel wall 7.307-8.4516m
938, 979, 980	vessel wall 8.4516-9.063m
939, 982, 983	vessel head 9.063-9.5163m
940, 985, 986	vessel head 9.5163-10.421m
987, 988, 989	vessel top
990, 991, 992	vessel top
993, 994, 995	vessel top
996, 997, 998	vessel top
10, 11, 12	Non-Powered HTSTRs for Tie Rods
13, 14, 15	Non-Powered HTSTRs for Thimbles (EL0.400-2.054)
16, 17, 18	Non-Powered HTSTRs for Thimbles (EL2.054-5.820m)
19, 20, 21	HTSTRs for Internals between EL5.820-6.170m
22, 23, 24	HTSTRs for Guide Thimbles/RCC between EL6.170-9.9665m
25, 26, 27, 28, 29, 30, 31, 32, 33	HTSTRs for Separation between Upper Plenum and Upper Head
34, 35, 36	Internal Wall of the Annular Downcomer-Head Bypass

CALCULATION WORK SHEET

Subject _____ Page 31 /
Prepared by _____ Checked by _____

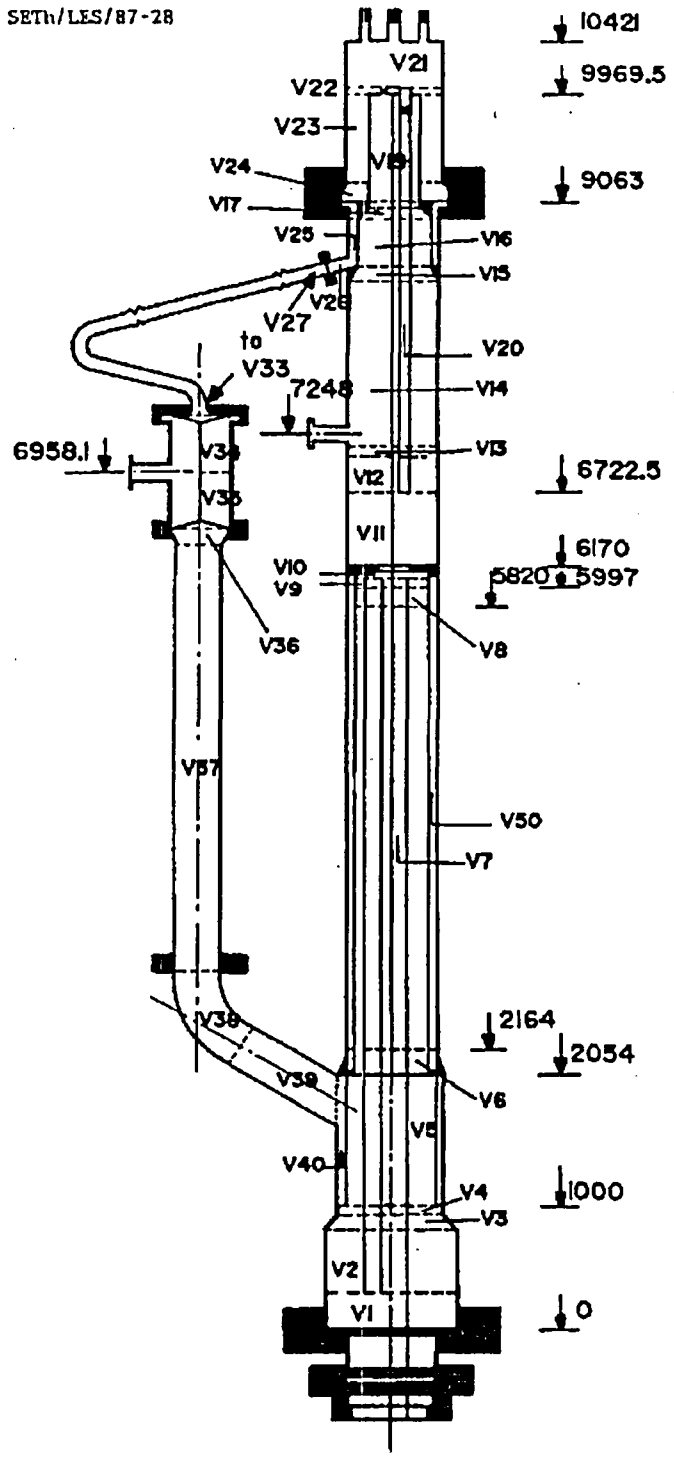

Figure 3: Pressure Vessel Fluid Cells (Figure III.2, SETh/LES/87-28)

CALCULATION WORK SHEET

Subject: Page 321
Prepared by Checked by

Nodalization of the lower plenum is shown in Figure 4. It is modeled with four levels. One source is provided to connect the external portion of down comer. The lower plenum has five spacer grids, located at elevations: 0.500, 0.736, 0.966, 1.196 and 1.696 (p. 13/85, SETh/LES/87-28).

The core is composed of 428 electronically heated rods and 29 thimbles, which are arranged according to 17 x 17 core square lattice. The heater rod has an outer diameter of 9.5mm. The thimble tube has an inner diameter of 8mm and an outer diameter of 12 mm. The pitch of the bundle is 12.6mm. Figure 5 shows the cross section of the rod bundle. A thimble tube labeled with "S" identifies short thimbles and with "L" identifies long thimbles. According to Figure 5, the number of heater rods in the relative cells 1-6 is respectively: 56, 56, 56, 87, 88 and 85. The level input parameters are derived in the following pages for the low plenum levels.

CALCULATION WORK SHEET

Subject: _____ Page 331
Prepared by _____ Checked by _____

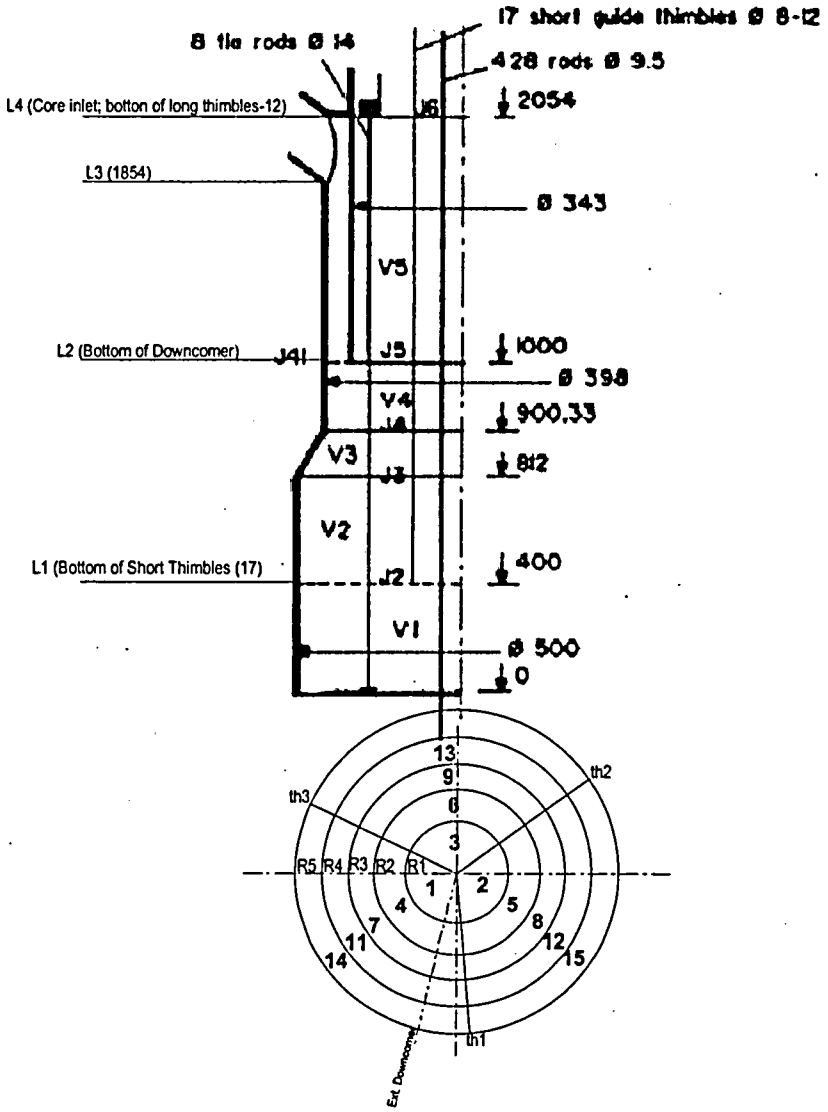

Figure 4 : Lower Plenum Nodalization

CALCULATION WORK SHEET

Subject: _____ Page 34-1
Prepared by _____ Checked by _____

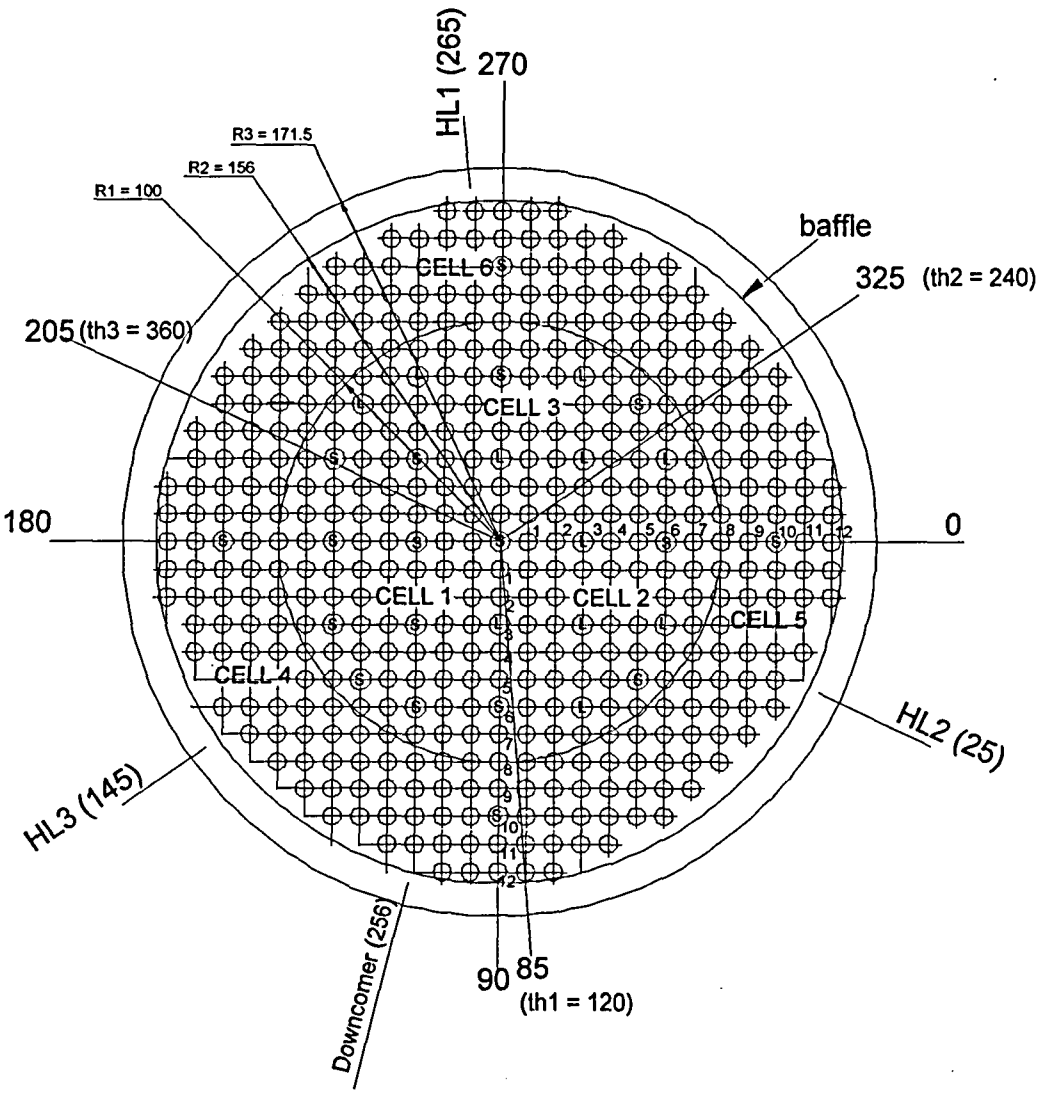

Figure 5: Rod Bundle Cross Section

AdSTM
Advanced Systems Technology and Management, Inc.

CALCULATION WORK SHEET

Subject Level 1 Page 351
Prepared by _____ Checked by _____

Elevation : 0.00 - 0.400 m

Vessel internal structures: Heater Rods, and tie rods.

Cell 1 (See Fig. 5) ✓

No. of Heater rods : 56

Fluid Volume Fraction (FRVOL)

diameter of R1

Total Area : $\frac{1}{3} \times 3.14 \times (0.1)^2 = 0.010467\ m^2$

Heater Rod Area :

OD of Heater rod.

$$56 \times 3.14 \times \left(\frac{9.5e-3}{2}\right)^2 = 3.97 \times 10^{-3}\ m^2$$

total volume :

$$0.010467 \times 0.4 = 4.187 \times 10^{-3}\ m^3$$

Volume of Heater rods :

$$3.97 \times 10^{-3} \times 0.4 = 1.59 \times 10^{-3}\ m^3$$

$$FRVOL = \frac{(4.187 - 1.59) \times 10^{-3}}{4.187 \times 10^{-3}} = 0.621$$

CALCULATION WORK SHEET

Subject Level 1 - Cell 1 Page 3b 1
Prepared by _____ Checked by _____

FRFA-Z (Cell Edge Flow Area Fraction in z-direction)

total Area, $FA_t = 3.14 \times 0.1^2 \times \frac{1}{3} = 1.0467 \times 10^{-2}\ m^2$

flow Area, $FA = FA_t - 56 \times 3.14 \times \left(\frac{9.5E-3}{2}\right)^2$

$= 6.5 \times 10^{-3}\ m^2$

Short thimbles end at EL0.400. Flow Area at the upper boundary of Cell 1 is.

$FA = 6.5 \times 10^{-3} - 8\frac{1}{3} \times 3.14 \times \left(\frac{12e-3}{2}\right)^2$ (Area occupied by thimbles)

$= 5.558 \times 10^{-3}\ m^2$

The two spacers at EL=0.50, 0.736 are lumped into one and be accounted at the boundary between Level 1 and Level 2. The flow area at the spacer location is

$FA \times 0.78 = 5.558 \times 10^{-3} \times 0.78 = 4.335 \times 10^{-3}\ m^2$

Where, the flow area at spacers is 78% of overall flow area,

$78\% = \frac{0.033384\ m^2}{0.0428\ m^2}$,

the flow arer at spacers is $0.033384\ m^2$; the overall flow area is $0.0428\ m^2$ (See P2PE 420 cards, Reference 3)

$FRFA\text{-}Z = \frac{4.335 \times 10^{-3}\ m^2}{1.0467 \times 10^{-2}\ m^2} = 0.414$

AdSTM
Advanced Systems Technology and Management, Inc.

CALCULATION WORK SHEET

Subject Level 1 - Cell 1 Page 371
Prepared by _____ Checked by _____

HD - 2

$P_{wetted}(HR) = 56 \times 3.14 \times 9.5 \times 10^{-3} = 1.67\ m$

$P_{wetted}(thimbles) = 8.333 \times 12 \times 10^{-3} \times 3.14 = 0.314\ m$

$HD - 2 = \dfrac{4 \times 6.5 \times 10^{-3}}{1.67 + 0.314} = 1.3105 \times 10^{-2}\ m$

Cfz - 2

friction coeficient is determined according to the approach given on the next page.

In the input deck, cfz - 2 = 4.9152 e - 3 is used correspond to K = 2 X 0.3043 (two spacer grids).

two spacers are lumped into one space at the boundary between level 1 and level 2.

AdSTM
Advanced System Technology and Management, Inc.

CALCULATION WORK SHEET

Subject Level 1 - Cell 1 Page 381
Prepared by _____ Checked by _____

Loss coeficient at spacer grids, k

k is calculated using the equation below,

$$K = \left(1 - 0.707\sqrt{1 - \frac{A_{j+1/2}}{A_j}} - \frac{A_{j+1/2}}{A_j}\right)^2$$

(Equation I-16, Appendix I, TRACE Theory Manual)

Where

$A_{j+\frac{1}{2}} = 0.033384\,m^2$, flow area at spacer grids, page 36

$A_j = 0.0428\,m^2$, overall core flow area, page 36

$$\frac{A_{j+\frac{1}{2}}}{A_j} = 0.78$$

$$K = \left(1 - 0.707\sqrt{1 - 0.78} - 0.78\right)^2 = 0.3043$$

In the reference deck, FRZC is used. K is converted into FRZC according to

AdSTM
Advanced Systems Technology and Management, Inc.

CALCULATION WORK SHEET

Subject _____ Page 391
Prepared by _____ Checked by _____

Hydraulic Diameter

Cell Lengths

$$FRIC_{i+1/2} = K_{i+\frac{1}{2}} \cdot HD_{i+\frac{1}{2}} \left(DX_i + DX_{i-1} \right)$$

(Equation 4-4, page 86, TRACE 4160 User Guide, Volume 2)

CALCULATION WORK SHEET

Subject level i (cell 1) Page 401
Prepared by _____ Checked by _____

FRFAXR - edge flow area fraction in radial direction

diameter of Ring 1, $2R_1 = 0.2m$, Figure 1.

$$A_T = 0.4 \times \frac{\pi}{3} \times 0.2 = 8.373 \times 10^{-2}\ m^2$$

In the following, area the blocked by HR/thimbles in the radial direction will be computed:

(1) determine the rods that intersect with the surface at $R = 0.1\ m$

(2) determine the intersection area

As the result, the area blocked by HRs is:

$$\frac{1}{3} \times 0.4 \times R_1 \times \Sigma\phi_{ij} = \frac{1}{3} \times 0.1 \times 3.49 = 0.349 \times 0.4 \times \frac{1}{3} = 0.04654\ m^2$$

// $\Sigma\phi_{ij} = 3.49$

$$FRFAXR = 1 - \frac{\Sigma\phi_{ij}}{2\pi} = 1 - \frac{3.49}{2\pi} = 0.444$$

ϕ_{ij} - the angle substended by the intesection between the circle $R = 0.1m$ and a rod at (i, j), as shown in Fig 6.

Rod at (i, j) means the rod is at i^{st} column, j^{th} row.

Details will be given to calculate ϕ_{ij} in the next few pages

AdSTM
Advanced Systems Technology and Management, Inc.

CALCULATION WORK SHEET

Subject Level 1 – Cell 1 Page 4.1.1
Prepared by _____ Checked by _____

A heater rod, located at i^{th} column and j^{th} row as shown in Figure 6, intersects with the surface at $R = 0.1\,m$, if

(1) $$a = \sqrt{(12.6 \cdot i)^2 + (12.6 \times j)^2} < R_1 + r = 104.75\ mm$$

and

(2) $$a = \sqrt{(12.6 \times i)^2 + (12.6 \times j)^2} > R_1 - r = 95.25\ mm$$

Where, 12.6 mm is pitch; r – radius of heater rods; a – the distance between the core centerline and the center line of Rod (i, j)

Using the above criteria (1) and (2), in the sector $(0° - 90°)$, the HRs intersecting with the surface at $R = 0.1\,m$ are

Rods (i,j)	distance (a_{ij})	Angle ϕ_{ij} – See Next page
(8,0) (0,8)	100.8	9.5×10^{-2}
(8,1) (1,8)	100.778	9.336×10^{-2}
(8,2) (2,8)	103.776	7.127×10^{-2}
(7,4) (4,7)	100.778	9.336×10^{-2}
(6,5) (5,6)	97.628	8.331×10^{-2}

AdSTM
Advanced Systems Technology and Management, Inc.

CALCULATION WORK SHEET

Subject Level 1 - Cell 1 Page 42 1
Prepared by _____ Checked by _____

The angle subtended by a HR at (i, j), ϕ_{ij} can be calculated as follows (see Figure 6)

$$\cos\left(\tfrac{1}{2}\phi_{ij}\right) = \frac{R_1^2 + a_{ij}^2 - r^2}{2R_1 a_{ij}}$$ (www.alcyone.com/max/reference/maths/trigonometry)

$$\phi_{ij} = 2\cos^{-1}\left(\frac{R_1^2 + a_{ij}^2 - r^2}{2R_1 a}\right)$$

For 0°-360°

4 Sectors in one sector $\frac{360°}{4}$

$$\Sigma\phi_{ij} = 4 \times 2(9.5 + 9.336 + 7.127 + 9.336 + 8.331)\times 10^{-2}$$

$$= 3.491$$

HD-R See Figure 7. The number of HRs that intersect with the surface of Cell 1 at R = 0.1 m is 12,

$$P_{wetted} = 0.4 \times 12 \times 2 \times \frac{\pi}{3} \times 0.2 = 9.809 \text{ m}$$

$$HD\text{-}R = \frac{4A}{P_{wetted}} = \frac{4 \times 8.373 \times 10^{-2}}{9.809}$$ → pag 40

$$= 0.0152 \text{ m}$$

CFZ R

$= 0.0$

AdSTM
Advanced Systems Technology and Management, Inc.

CALCULATION WORK SHEET

Subject _____ Page 431
Prepared by _____ Checked by _____

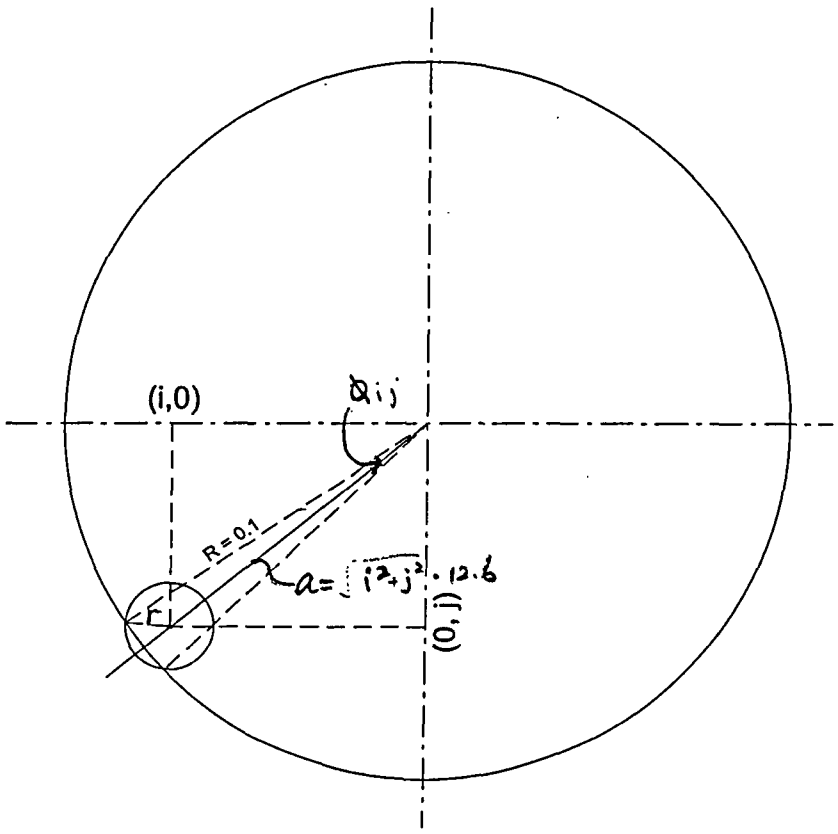

Figure 6

AdSTM
Advanced Systems Technology and Management, Inc.

CALCULATION WORK SHEET

Subject _____ Page 44 1
Prepared by _____ Checked by _____

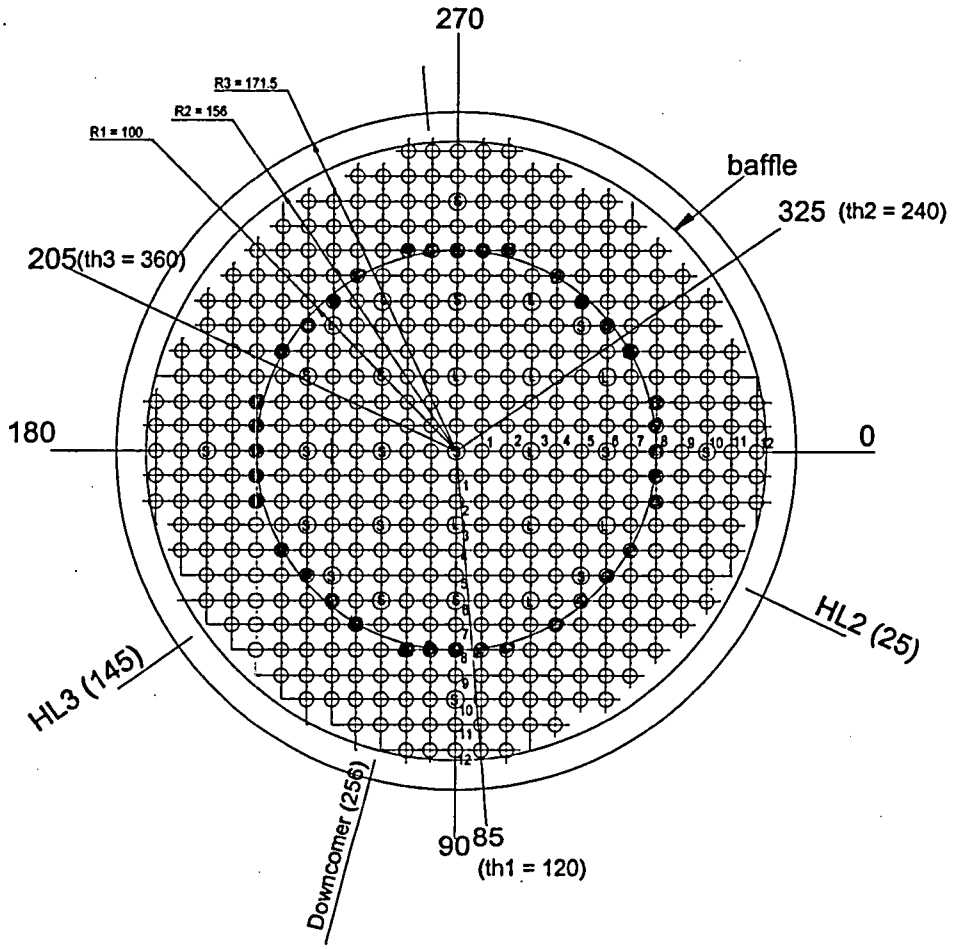

Figure 7

CALCULATION WORK SHEET

Subject Level 1 (Cell 1) Page 45 1
Prepared by _____ Checked by _____

ERFAWT

The HRs that intersect with the surface or the surface 5° (Fig 8) are (0,j) or (1,j). A HR/Thimble intersects with the surface if

→ (0, j)

$h = 12.6j \cdot \sin 5° < r = 4.75$ mm for a HR

or

$h = 12.6j \cdot \sin 5° < 6$ mm for a thimble Tube

→ (1, j)

$h = (142.78 + 12.6i) \sin 5° < r = 4.75$ mm

The HRs/Thimbles intersecting with the surface include :

(0, j)	h	2c	
0	0	4.75	
1	1.0976	4.243	
2	2.1952	8.425	
3	3.293	6.847	- Thimble, not present in Cell
4	4.39	3.627	

(1, j)	h	
8	3.657	6.063

CALCULATION WORK SHEET

Subject Level 1 - Cell 1 Page 461
Prepared by Checked by

Intersection length (2c) - Fig 9

$$c = \sqrt{r^2 - h^2}$$

$$FRFAYT = \frac{0.1 - \Sigma C}{0.1} = \frac{0.1 - 0.0321}{0.1} = 0.679$$

$$FA-T = 0.679 \times 0.4 \times 0.1 = 0.0272\ m^2$$

HD-T

$$P_{wetted} = 4 \times 0.4 \times 2 + 0.1 = 3.3\ m$$

$$HD-T = \frac{4A}{P_{wetted}} = \frac{4 \times 0.0272}{3.3} = 0.03297\ m$$

CF2-T

0.0

AdSTM
Advanced Systems Technology and Management, Inc.

CALCULATION WORK SHEET

Subject level 1 - Cell 1 Page 47 1
Prepared by _____ Checked by _____

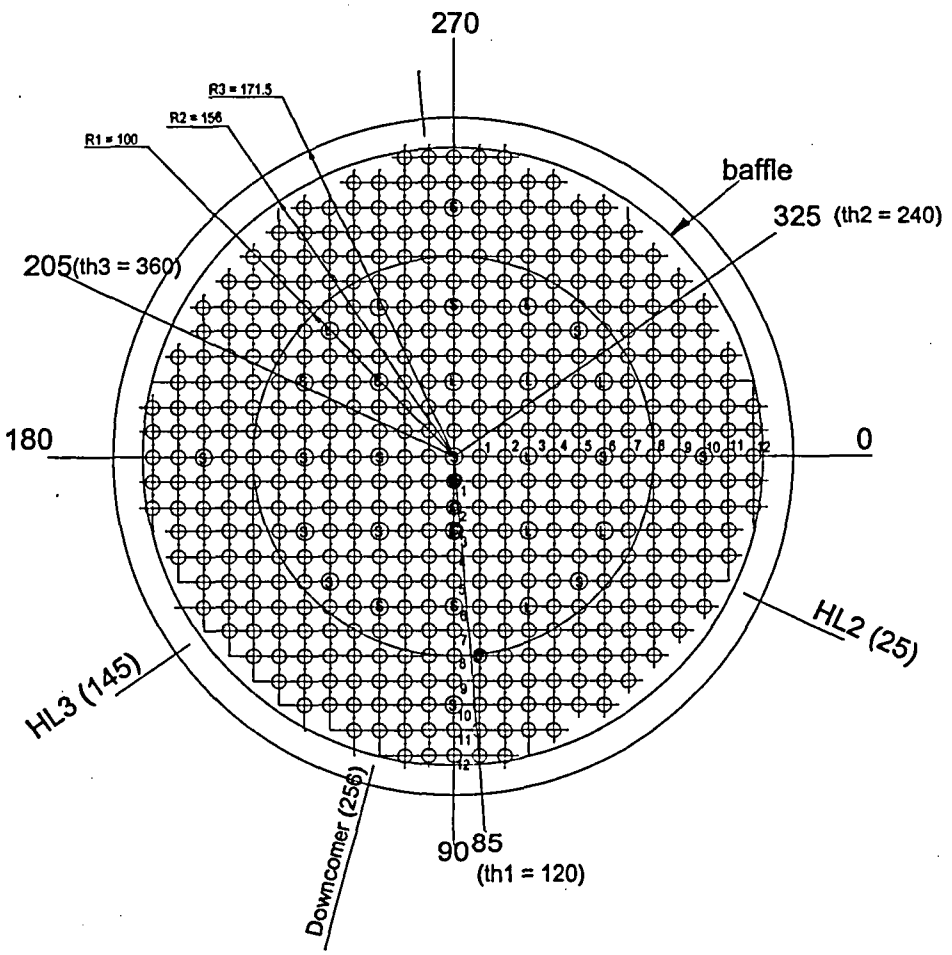

Figure 8.

AdSTM
Advanced Systems Technology and Management, Inc.

CALCULATION WORK SHEET

Subject Level 1 - Cell 1 Page 481
Prepared by _____ Checked by _____

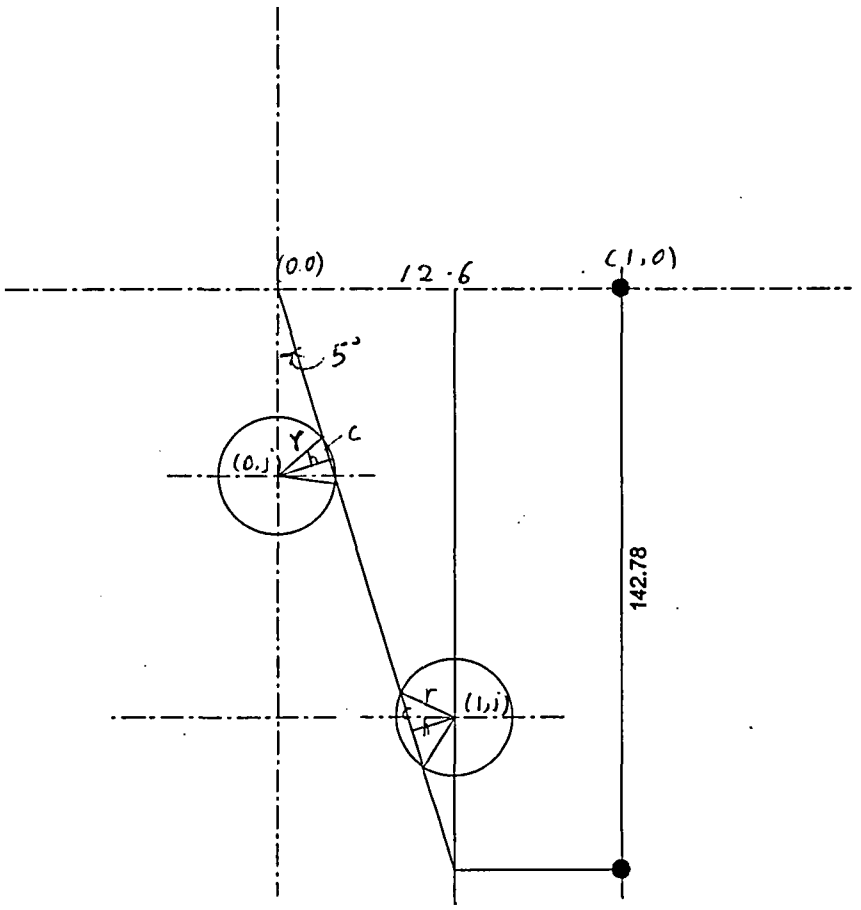

Figure 7

AdSTM
Advanced Systems Technology and Management, Inc.

CALCULATION WORK SHEET

Subject Level 1 - Cell 2 Page 491
Prepared by _____ Checked by _____

FRVOL, FRFA-Z, FRFA-R, HD-Z, HDR and CFZ-Z have the same values for Cell 1 and Cell 2 of Level 1:

FRVOL = 0.621

FRFA-Z = 0.414

FRFA-R = 0.444

HD-Z = 1.3105×10^{-2} m

HD-R = 0.0152 m

CFZ-Z = ~~4.9~~ 4.9152×10^{-3}

CFZ-R = 0.0

CFZ-T = 0.0

FRFA-T and HD-T are derived in a similiar approach used in deriving FRFA-T and HD-T for Cell 1 of Level 1. It is first determined which rods/thimbles intersect with the cell surface and then determine the blocked area by those rods/thimbles.

AdSTM
Advanced Systems Technology and Management, Inc.

CALCULATION WORK SHEET

Subject Level 1 - Cell 2 Page 50 1
Prepared by _____ Checked by _____

FRFA-T (Fig 10 and Fig 11)

A heater row intersects with the surface of Cell 2 at 325°if

$h < r_{row} = 475$ mm

$h = c \sin \theta$

$\theta = \tan^{-1}(j/i)$, $c = \sqrt{475^2 - h^2}$

The heater rows intersecting with the surface include:

(1,1) (2,1) (3,2) (4,3) and (6,4).

	$\theta°$	h	$2c$
(1,1)	10.02	3.0996	8.823
(2,1)	8.42	4.12	10.332
(3,2)	1.29	1.02	4.713
(4,3)	1.89	2.0752	9.052
(6,4)	1.29	2.04	4.92

$2\Sigma c_i = 47.84$ mm , $FRFA-T = 1 - \frac{47.84}{100} = 1 - 0.4784 = 0.5216$

$FAT = 0.5216 \times 0.1 \times 0.4 = 0.02086\ m^2$

AdSTM
Advanced Systems Technology and Management, Inc.

CALCULATION WORK SHEET

Subject Level 1 - Cell 2 Page 51

Prepared by _____ Checked by _____

HD-T

$$P_{wetted} = 5 \times 2 \times 0.4 + 0.1 = 4.1\ m$$

$$HD\text{-}T = \frac{4 \cdot A}{P_{wetted}} = \frac{4 \times 0.2086}{4.1} = 0.02036\ m$$

AdSTM
Advanced Systems Technology and Management, Inc.

CALCULATION WORK SHEET

Subject _____ Page 52 1
Prepared by _____ Checked by _____

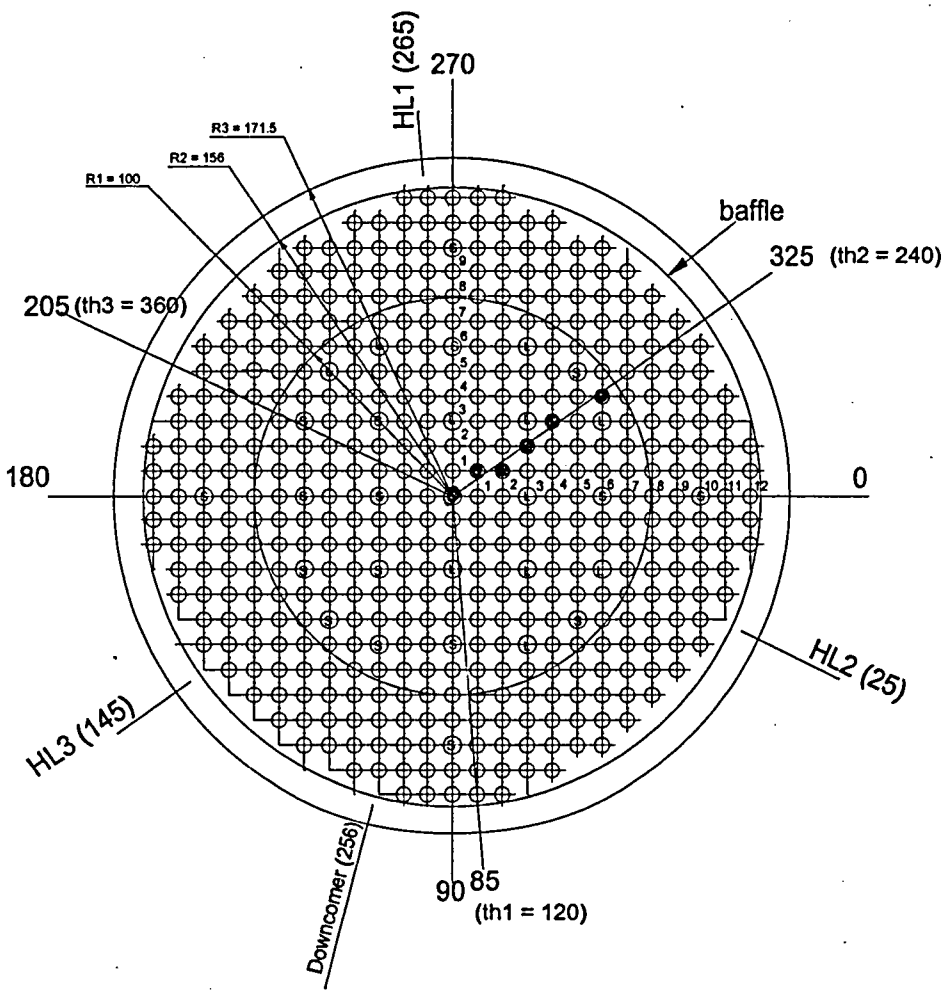

Figure 10

AdSTM
Advanced Systems Technology and Management, Inc.

CALCULATION WORK SHEET

Subject Level 1 - Cell 2 Page 531
Prepared by _____ Checked by _____

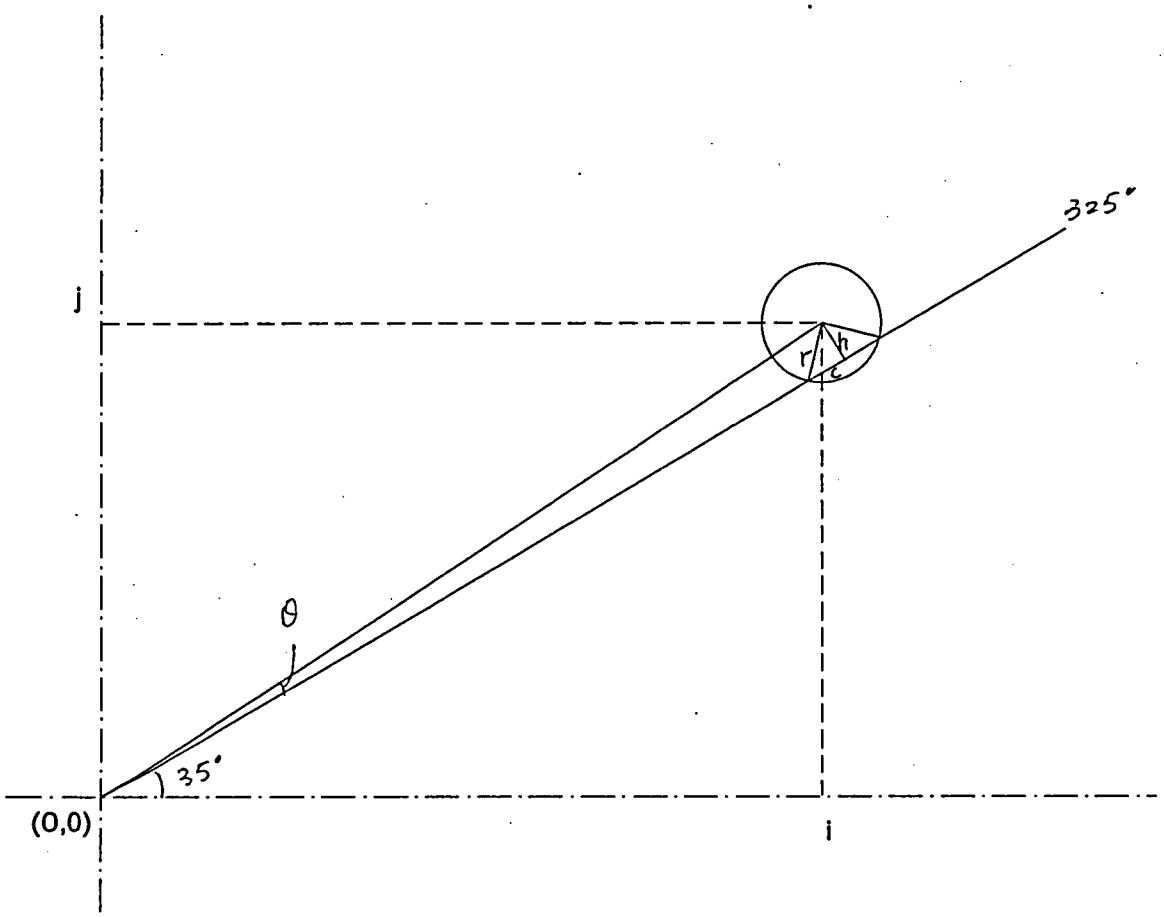

Figure 11.

AdSTM
Advanced Systems Technology and Management, Inc.

CALCULATION WORK SHEET

Subject Level 1 - Cell 3 Checked by
Prepared by

FRVOL, FRFA-Z, FRFA-R, HD-Z, HDR and CFZ-Z have the same values for Cell 1 and Cell 3 of Level 1:

FRVOL = 0.621

FRFA-Z = 0.414

FRFA-R = 0.444

HD-Z = 1.3105×10^{-2} m

HD-R = 0.0152 m

CFZ-Z = ~~4.19~~ 4.9152×10^{-3}

CFZ-R = 0.0

CFZ-T = 0.0

FRFA-T and HD-T are derived in a similiar approach used in deriving FRFA-T and HD-T for Cell 1 of Level 1. It is first determined which rods/thimbles intersect with the cell surface and then determine the blocked area by those rods/thimbles.

AdSTM
Advanced Systems Technology and Management, Inc.

CALCULATION WORK SHEET

Subject: Level 1 - Cell 3 Page 551
Prepared by _____ Checked by _____

FrFA-T

A heater rod intersects with the surface of Cell 3 at 205°, if

$h < 4.5\,mm$ for a Heater rod

or

$h < 6\,mm$ for a thimble tube.

$$h = a \sin\theta = 12.6 \cdot \sqrt{i^2 + j^2} \sin\theta$$

$$\theta = \tan^{-1}(j/i) - 25°$$

The heater rods/thimbles intersecting with the Cell surface include:

(2,1) (3,1) (4,2), (5,2), (6,3) and (7,3).

See Fig and Fig

$$C = \sqrt{4.75^2 - h^2}$$ for HRs

$$C = \sqrt{6^2 - h^2}$$ for a thimble tube

	$\theta°$	h	$2C$
(2,1)	1.578	0.776	9.37
(3,1)	6.556	4.547	2.749
(4,2)	1.578	1.551	8.979
(5,2)	3.188	3.771	5.777
(6,3)	1.578	3.327	8.282
(7,3)	1.790	2.995	7.373

CALCULATION WORK SHEET

Subject Level 1 - C3 Page 561
Prepared by _____ Checked by _____

$$FRFA-T = 1 - 2\bar{z}C = 1 - \frac{42.57}{100} = 1 - 0.425 = 0.575$$

$$FA = 0.1 \times 0.4 \times 0.575$$

$$= 0.017\ m^2$$

HD-T

$$P_{wetted} = 2 \times 6 \times 0.4 + 0.1 = 4.9\ m$$

$$HD = \frac{4A}{P_{wetted}} = \frac{4 \times 0.017}{4.9} = 0.01388\ m$$

AdSTM
Advanced Systems Technology and Management, Inc.

CALCULATION WORK SHEET

Subject _____ Page 57 1
Prepared by _____ Checked by _____

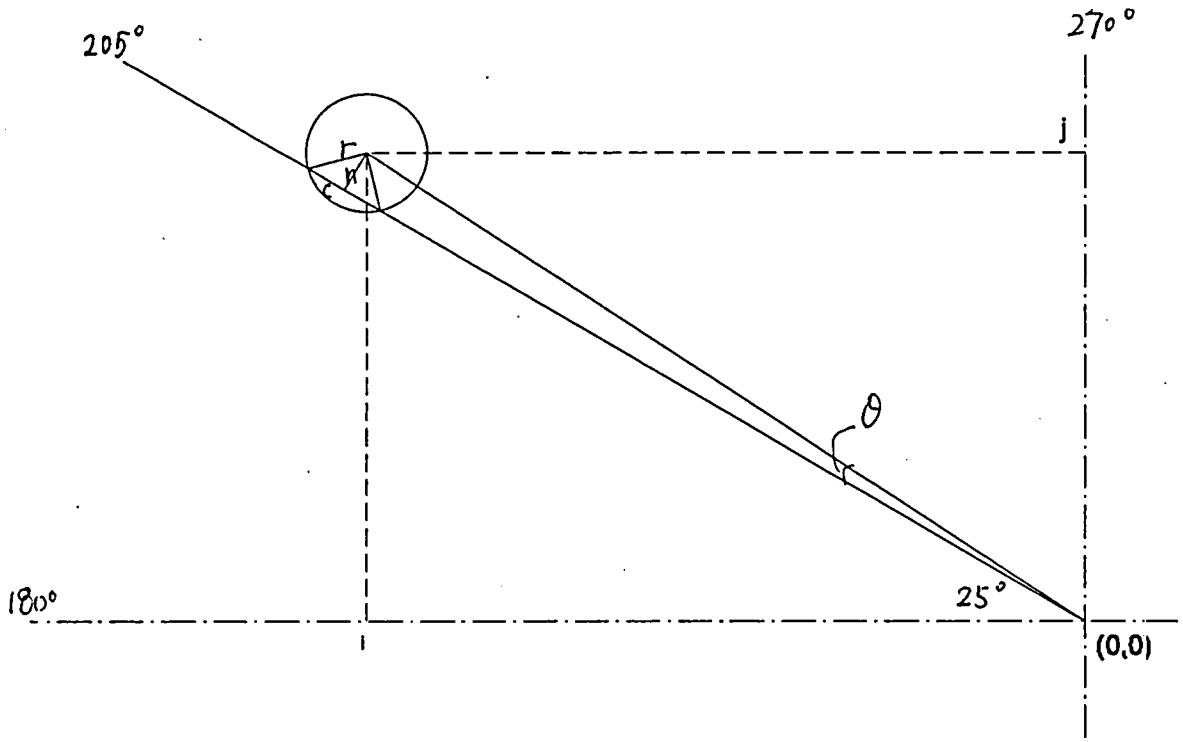

Figure 12

AdSTM
Advanced Systems Technology and Management, Inc.

CALCULATION WORK SHEET

Subject _____ Page 58 1
Prepared by _____ Checked by _____

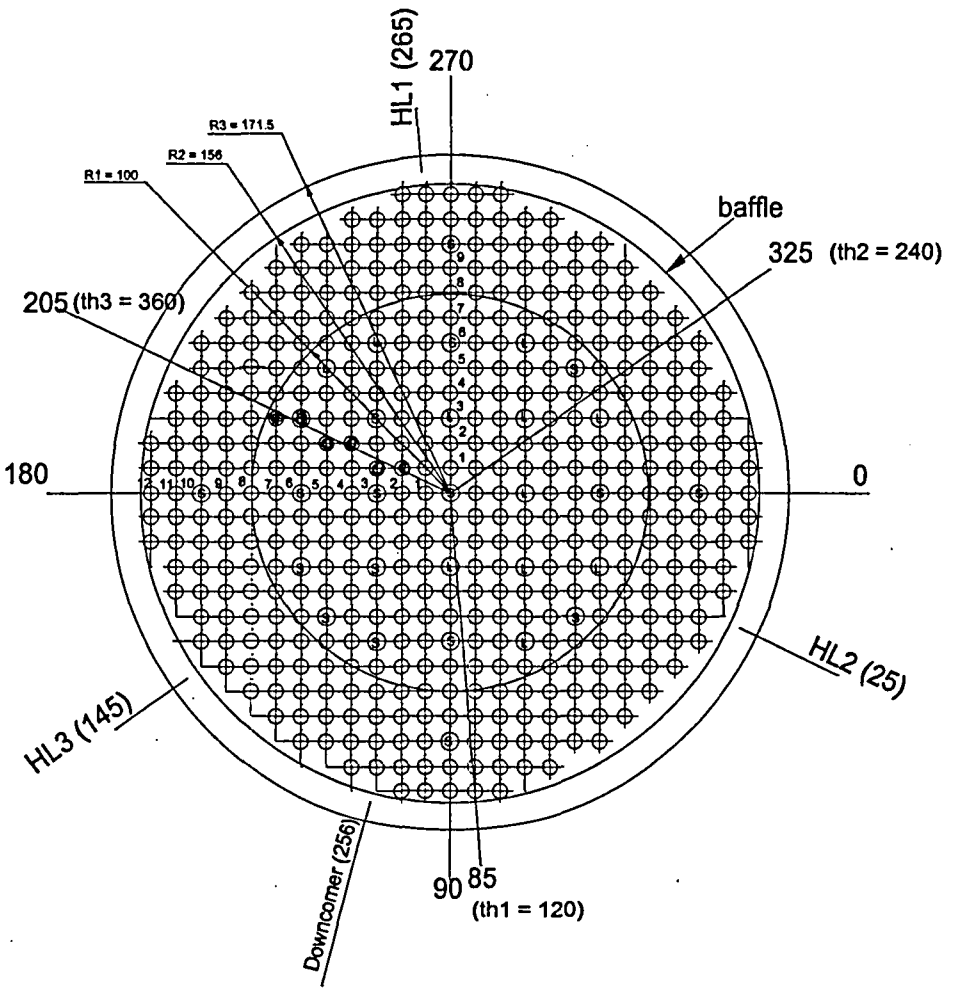

Figure 13.

AdSTM
Advanced Systems Technology and Management, Inc.

CALCULATION WORK SHEET

Subject Level 1 - Cell 4 Page 591
Prepared by _____ Checked by _____

FRVOL

Total volume $= \frac{\pi}{4}(0.312^2 - 0.2^2) \cdot \frac{1}{3} \times 0.6 = 6.0 \times 10^{-3} m^3$

Volume of HRs:

$87 \times \frac{\pi}{4} \times (0.0095)^2 \times 0.4 = 2.465 \times 10^{-3} m^3$

Fluid Volume :

$= (6.0 - 2.465) \times 10^{-3} = 0.003537$

$FRVOL = \frac{0.003537}{0.006} = 0.589$

CALCULATION WORK SHEET

Subject Level 1 - Cell 4 Page 601
Prepared by Checked by

FRFA - Z

total area $= \frac{\pi}{4} \times (0.312^2 - 0.2^2) \times \frac{1}{3} = 0.0150\ m^2$

area occupied by heater rods

$87 \times \frac{\pi}{4} \times (19.5e-3)^2 = 0.006164\ m^2$

area occupied by thimble tubes (2 thimble tubes) end at the upper boundary of Level 1

$2 \times \frac{\pi}{4} \times (12e-3)^2 = 2.26 \times 10^{-4}\ m^2$

flow area away from a spacer grid $= (1.50\times10^{-2} - 6.164\times10^{-3} - 2.26\times10^{-4})$
$= 8.615\times10^{-3}$

The two spacers (ele = 0.500, 0.736 m) are assumed to be located at the upper boundary of Level 1 at elev. = 0.4 m,

The flow area FA - Z $= 8.615\times10^{-3} \times 0.78 = 6.72\times10^{-3}\ m^2$

$FRFA - Z = \frac{6.72\times10^{-3}}{1.5\times10^{-2}} = \underline{0.4478}$

AdSTM
Advanced Systems Technology and Management, Inc.

CALCULATION WORK SHEET

Subject Level 1 - Cell 4 Page 61 1
Prepared by _____ Checked by _____

HD - Z

P_{wetted} (HRs) = 87 x 3.14 x (9.5e-3) = 2.595 m

P_{wetted} (Thimbles) = 2 x 3.14 x (12e-3) = 0.07536 m

$$HD\text{-}Z = \frac{8.615 \times 10^{-3} \times 4}{2.595 + 0.07536} = 1.291 \times 10^{-2} \text{ m}$$

CF Z - Z determined using the approach given lier.

CFZ-Z = 4.2327×10^{-3} is used in the input deck.

($K = 6.080 \times 10^{-4}$)

CALCULATION WORK SHEET

Subject Level 1 - Cell 4 Page 621
Prepared by _____ Checked by _____

FRFA-T (Ref. to Fig. 8 and Fig. 9 for Cell 1 of Level 1) and calnote for Cell 1 of Level 1

The heater rods intersecting with the surface at 85° include:

(1,9), (1,10), (1,11) and (1,12)

	h	2C
(1,9)	2.559	8.003
(1,10)	1.4617	9.039
(1,11)	0.3641	9.472
(1,12)	0.7335	9.386

Where

$$h = (142.78 - 12.6 \times j) \sin 5° =$$

$$C = \sqrt{4.75^2 - h^2} =$$

$$FRFA\text{-}T = 1 - \frac{2\bar{2}C}{0.157 - 0.1} = 1 - \frac{3.59 \times 10^{-2}}{0.057} = 0.37$$

$$FA\text{-}T = 0.37 \times (0.157 - 0.1) \times 0.4 = 8.436 \times 10^{-3}\ m^2$$

AdSTM
Advanced Systems Technology and Management, Inc.

CALCULATION WORK SHEET

Subject Level 1 - Cell 4 Page 631
Prepared by _____ Checked by _____

HD-T

$$P_{wetted} = 4 \times 0.4 \times 2 + 0.057 = 3.2\ m + 0.057\ m$$

$$= 3.257\ m$$

$$HD\text{-}T = \frac{4A}{P_{wetted}} = \frac{4 \times 8.436 \times 10^{-3}}{3.257} = 0.01036\ m$$

CFZ-T

0.0

AdSTM
Advanced Systems Technology and Management, Inc.

CALCULATION WORK SHEET

Subject Level 1 - Cell 4 Page 641
Prepared by _____ Checked by _____

FR-FA-R

$= 1.0$

HD-R

$$FA\text{-}R = \frac{1}{3} \times 0.4 \times 3.14 \times 0.312$$

$$P_{wetted} = \frac{1}{3} \times 3.14 \times 0.312$$

$$HD\text{-}R = \frac{4\,FA\text{-}R}{P_{wetted}} = 1.6\ m$$

AdSTM
Advanced Systems Technology and Management, Inc.

CALCULATION WORK SHEET

Subject Level 1 - Cell 5 Page 65/

Prepared by _____ Checked by _____

No. of Heater rods : 88

No. of thimble tubes : 1

FRVOL

total volume $= \frac{1}{3} \times \pi \times \frac{1}{4}(0.312^2 - 0.2^2) \times 0.4 = 6.0 \times 10^{-3} m^2$

volume of heater rods

$= \frac{3.14}{4} \times (9.5e-3)^2 \times 0.4 \times 88 = 2.494 \times 10^{-3} m^3$

~~volume of thimble tube :~~

~~$= \frac{\pi}{4} \times (12e-3)^2 \times 0.4$~~

~~$= 4.522 \times 10^{-5} m^3$~~

fluid volume :

$= 6.0 \times 10^{-3} - 2.494 \times 10^{-3}$

$= 3.508 \times 10^{-3} m^3$

FRVOL = 0.584472

AdSTM
Advanced Systems Technology and Management, Inc.

CALCULATION WORK SHEET

Subject Level 1 - Cell 5 Page 661
Prepared by _____ Checked by _____

FRFA - Z

Area Total = 0.0150 m^2 (Cell 4, Level 1)

area occupied by heater rods

$$88 \times \frac{\pi}{4} \times (9.5e-3)^2 = 6.234 \times 10^{-3}\ m^2$$

area occupied by thimble tuble:

$$\frac{\pi}{4} \times (12e-3)^2 = 1.13 \times 10^{-4}\ m^2$$

flow area away from spacer grids.

$$0.0150 - 6.234 \times 10^{-3} - 1.13 \times 10^{-4} = 8.652 \times 10^{-3}\ m^2$$

$$FRFA - Z = \frac{8.652 \times 10^{-3}}{0.0150} \times 0.78 = 0.5768 \times 0.78 = 0.450$$

HD - Z

$$P_{wetted}\ (HES) = 88 \times 3.14 \times (9.5e-3) = 2.625\ m$$

$$P_{wetted}\ (thimbles) = 3.14 \times (12e-3) = 0.03768\ m$$

$$P_{wetted} = 2.663\ m$$

$$HD = \frac{4 \times 8.652 \times 10^{-3}}{2.663} = 1.300e-2\ m$$

CALCULATION WORK SHEET

Subject Level 1 - Cell 5 Page 671
Prepared by _____ Checked by _____

FRFA - R

1.0

HD - R

HD-R = 1.6 m (Same as that of Cell 4, Level 1)

CFZ - R

0.0

FRFA-T (Ref to Fig 10 for Cell 2 of Level 1)

The heater rods intersecting with the cell surface at 325° include (7.5), (8.6) and (9.6).

	θ°	h	2C
(7, 5)	1.293	3.073	9.265
(8, 6)	1.889	4.15'	4.62
(9, 6)	0.5557	1.05	7.243

$$FRFA\text{-}T = 1 - \frac{2\Sigma C_i}{0.057} = 0.629$$

$$FA\text{-}T = 0.629 \times 0.057 \times 0.4 = 0.01435\ m^2$$

CALCULATION WORK SHEET

Subject Level 1 - Cell 5 Page 68 1
Prepared by _____ Checked by _____

HD-T

$$P_{wetted} = 3 \times 2 \times 0.4 + 0.057 = 2.457 \text{ m}$$

$$HD = \frac{4A}{P_{wetted}} = \frac{4 \times 0.01435}{2.457} = 2.336 \times 10^{-2} \text{ m}$$

CALCULATION WORK SHEET

Subject Level 1 - Cell 6 Page 691
Prepared by _____ Checked by _____

No. of HRs : 85

No. of thimbles : 0 (1 short thimble tube ends at the upper boundary of Level 1)

FRVOL

Total volume $= 6.0 \times 10^{-3}\ m^3$ (Same as that of Cell 4)

Volume of heater rods

$$= 85 \times \frac{\pi}{4} \times (9.5e-3)^2 \times 0.4$$

$$= 2.409 \times 10^{-3}\ m^3$$

Fluid Volume $= (6.0 - 2.409) \times 10^{-3} = 3.593 \times 10^{-3}\ m^3$

FRVOL = 0.599

CALCULATION WORK SHEET

Subject Level 1 - Cell 6 Page 70

Prepared by _____ Checked by _____

FRFA -Z.

total area = 0.0150 m^2 (Same as that of Cell 4)

area occupied by heater rods:

$$85 \times \frac{\pi}{4} \times (9.5e-3)^2 = 6.022 \times 10^{-3}\ m^2$$

area occupied by thimbles

$$\frac{\pi}{4} \times (12e-3)^2 = 1.13 \times 10^{-4}\ m^2$$

flow area away from the spacer:

$$0.0150 - 6.022 \times 10^{-3} - 1.13 \times 10^{-4} = 8.87 \times 10^{-3}\ m^2$$

flow area at a spacer:

$$6.919 \times 10^{-3} \times 0.78 = 6.919 \times 10^{-3}\ m^2$$

$$FRFA - Z = \frac{6.919 \times 10^{-3}}{0.015} = 0.461$$

HD -Z

$$P_{wetted}\ (HRS) = 85 \times 3.14 \times (9.5e-3) = 2.536\ m$$

$$P_{wetted}\ (thimbles) = 3.14 \times 1 \times (12e-3) = 0.03768\ m$$

$$P_{wetted} = 2.574\ m$$

$$HD - Z = \frac{4 \times 8.87 \times 10^{-3}}{2.574} = 1.379E-2\ m$$

CALCULATION WORK SHEET

Subject Level 1 - Cell 6 Page 711
Prepared by _____ Checked by _____

CFZ-Z

$2 \times 0.304 = 0.608$

FRFA-R

1.0

HD-R

1.6 m (Same as that of Cell 4 of Level 1)

CFZ-R

0.0

FRFA-T (Ref to Fig 17/17 and Cal Note for Cell 3)

The heater rods intersecting with the cell surface at 205°. include:

(8.4) (9.4) and (10.5)

	θ	h	$2c$
(8.4)	1.5785	3.103	7.193
(9.4)	1.025	2.220	8.399
(10.5)	1.578	3.879	5.484

$$FRFA-T = 1 - \frac{\Sigma 2c_i}{0.057} = 0.6302$$

$$FA-T = 0.01437\ m^2$$

AdSTM
Advanced Systems Technology and Management, Inc.

CALCULATION WORK SHEET

Subject Level 1 - Cell 6 Page 721
Prepared by _____ Checked by _____

HD-T

$$P_{wetted} = 2 \times 3 \times 0.4 + 0.057 = 2.457 \text{ m}$$

$$HD\text{-}T = \frac{4A}{P_{wetted}} = 0.02339 \text{ m}$$

CFZ-T

0.0

CALCULATION WORK SHEET

Subject: Level 1 - Cells 7, 8 and 9 Page 731
Prepared by _____ Checked by _____

Cells 7, 8 and 9 are in Ring 3:

$R_2 = 0.156m$
$R_3 = 0.1715m$

Internal structures: 8 tie rods - ϕ14 mm

Assumptions:

- Cell 7 - 3 tie rods
- Cell 8 - 2 tie rods
- Cell 9 - 3 tie rods
- Tie rods are assumed to be located at

$$R = \frac{171.5 - 156}{2} = 163.76mm$$

CALCULATION WORK SHEET

Subject Level 1 - Cell 7 / 9 Page 74 1
Prepared by _____ Checked by _____

Cell 7 and Cell 9 have the same geometry and hydraulic parameters.

FRVOL

total volume:

$$\frac{1}{3} \times 0.4 \times \frac{\pi}{4} \times (0.343^2 - 0.312^2) = 2.125 \times 10^{-3} \ m^3$$

volume occupied by the tie rods:

$$3 \times 0.4 \times \frac{\pi}{4} \times (14e-3)^2 = 1.85 \times 10^{-4} \ m^3$$

fluid volume:

$$2.125 \times 10^{-3} - 1.85 \times 10^{-4} = 1.94 \times 10^{-3} \ m^3$$

$$\text{FRVOL} = \frac{1.94 \times 10^{-3}}{2.125 \times 10^{-3}} = 0.913$$

AdSTM
Advanced Systems Technology and Management, Inc.

CALCULATION WORK SHEET

Subject Level 1 - Cell 7/9 Page 751
Prepared by _____ Checked by _____

FRFA-Z

total area:

$$\frac{1}{3} \times \frac{\pi}{4} \times (0.343^2 - 0.312^2) = 5.314 \times 10^{-3}\ m^2$$

area occupied by the tie rods:

$$3 \times 3.14 \times \frac{1}{4} \times (14e-3)^2 = 4.62 \times 10^{-4}\ m^2$$

fluid area:

$$5.314 \times 10^{-3} - 4.62 \times 10^{-4} = 4.852 \times 10^{-3}\ m^2$$

$$\text{FRFA-Z} = \frac{4.852 \times 10^{-3}}{5.314 \times 10^{-3}} = 0.913$$

HD-Z

$$P_{wetted} = 3 \times 3.14 \times (14e-3) = 0.131947\ m$$

$$\text{HD-Z} = \frac{4 \times 4.852 \times 10^{-3}}{0.131947} = \cancel{0.1472}\ m$$

0.1471 RLS 3/27/06

CFZ-Z

CFZ-Z = 0.0

CALCULATION WORK SHEET

Subject Level 1 - Cell 7/9 Page 751
Prepared by _____ Checked by _____

FRFA-Z

total area:

$$\frac{1}{3} \times \frac{\pi}{4} \times (0.343^2 - 0.312^2) = 5.314 \times 10^{-3}\ m^2$$

area occupied by the tie rods:

$$3 \times 3.14 \times \frac{1}{4} \times (14e-3)^2 = 4.62 \times 10^{-4}\ m^2$$

fluid area:

$$5.314 \times 10^{-3} - 4.62 \times 10^{-4} = 4.852 \times 10^{-3}\ m^2$$

$$\text{FRFA-Z} = \frac{4.852 \times 10^{-3}}{5.314 \times 10^{-3}} = 0.913$$

HD-Z

$$P_{wetted} = 3 \times 3.14 \times (14e-3) = 0.131947\ m$$

$$\text{HD-Z} = \frac{4 \times 4.852 \times 10^{-3}}{0.131947} = 0.1472\ m$$

CFZ-Z

CFZ-Z = 0.0

CALCULATION WORK SHEET

Subject Level 1 - Cell 7+9 Page 761
Prepared by _____ Checked by _____

FRFA-R

= 1.0

HD-R

flow area = $\frac{\pi}{3} \times 0.343 \times 0.4 = 0.1436\ m^2$

$P_{wetted} = 3 \times 3.14 \times (14e-3) + \frac{1}{3} \times 3.14 \times 0.343 = 0.491\ m$

$HD\text{-}R = \frac{4 \times 0.1436}{0.491} = 1.1701\ m$

CFZ-R

CFZ-R = 0.0

AdSTM
Advanced Systems Technology and Management, Inc.

CALCULATION WORK SHEET

Subject Level - Cell 7/9 Page 771
Prepared by _____ Checked by _____

FRFA-T

= 1.0

HD-T

flow area = $0.4 \times (0.343 - 0.312)/2 = 0.0062\ m^2$

$P_{wetted} = (0.343 - 0.312)/2 = 0.0155\ m$

$$HD\text{-}T = \frac{4A}{P_{wetted}} = \frac{4 \times 0.0062}{0.0155} = 1.6\ m$$

CFZ-T

CFZ-T = 0.0

AdSTM
Advanced Systems Technology and Management, Inc.

CALCULATION WORK SHEET

Subject Level 1 - Cell 8 Page 7B1
Prepared by _____ Checked by _____

FRVOL

total volume: $2.125 \times 10^{-3}\ m^3$ (same as that of Cell 7/9)

volume occupied by the tie rods:

$$2 \times 0.4 \times \frac{\pi}{4} \times (14e-3)^2 = 1.23 \times 10^{-4}\ m^3$$

fluid volume:

$2.00\ e(-3)\ \cdot\ m^3$

FRVOL = 9.42×10^{-1}

AdSTM
Advanced Systems Technology and Management, Inc.

CALCULATION WORK SHEET

Subject Level 1 - Cell 8 Page 79 1
Prepared by _____ Checked by _____

FRFA-Z

total area: $5.314 \times 10^{-3}\ m^2$

area occupied by the tie rods:

$$2 \times 3.14 \times \frac{1}{4} (14e-3)^2 = 3.08 \times 10^{-4}\ m^2$$

fluid area:

$$5.006 \times 10^{-3}\ m^2$$

FRFA-Z = 0.94

HD-Z

P_{wetted} = $2 \times 3.14 \times (14e-3) = 0.0879\ m$

HD-Z = $\dfrac{4 \times 5.006 \times 10^{-3}}{0.0879} = 0.2278\ m$

CFZ-Z

CFZ-Z = 0.0

CALCULATION WORK SHEET

Subject level 1 - Cell 8 Page B01
Prepared by _____ Checked by _____

FRFA-T

= 1.0

HD-T

flow area = 0.0062 m^2 (same as that of Cell 7/9.)

P_{wetted} = 0.0155 m (same as that of Cell 7/9)

HD-T 1.6 m (same as that of Cell 7/9)

CFZ-T

CFZ-T = 0.0

AdSTM
Advanced Systems Technology and Management, Inc.

CALCULATION WORK SHEET

Subject Level 1 - Cell 8 Page 811
Prepared by _____ Checked by _____

FRFA-R

= 1.0

HD-R

flow area = 0.1436 m^2 (Same as that of Cell 7/9)

P_{wetted} = 0.491 m (Same as that of Cell 7/9)

HD-R = 1.1701 m (Same as that of Cell 7/9)

CFZ-R

CFZ-R = 0.0

CALCULATION WORK SHEET

Subject: Level 1 - Cells 10 - 12 Page 821
Prepared by _____ Checked by _____

In Level 1, Cells 10-12 in ring 4 are identical. there is no internal structure in these cells. Therefore,

FRVOL = 1.0

FRFA-Z = 1.0

FRFA-R = 1.0

FRFA-T = 1.0

HD-Z = ∞
HD-R = ∞
HD-T = ∞
} A value of 10^5 is used in the input deck.

CFZ-Z = 0.0

CFZ-R = 0.0

CFZ-T = 0.0

CALCULATION WORK SHEET

Subject Level 1 - Cells 13-15 Page 831
Prepared by _____ Checked by _____

In Level 1, Cells 13-15 of ring 5 (R4 = 199 mm, R5 = 250 mm) are identical. There is no internal structure in these cells. Therefore, we have:

FRVOL = 1.0

FRFA-Z = 1.0

FRFA-R = 0.0

FRFA-T = 1.0

CFZ-R = 0.0

CFZ-Z = 0.0

CFZ-T = 0.0

HD-Z

FA-Z = $\frac{1}{3} \times \frac{\pi}{4} \times (0.5^2 - 0.398^2) = 0.23968\ m^2$

P_{wetted} = $\frac{1}{3} \times \pi \times 0.5 = 0.5233\ m$

HD-Z = $4A/P_{wetted} = 0.1832\ m$

HD-R

0.0

HD-T

flow area = $0.4 \times (0.5 - 0.398)/2 = 0.0204\ m^2$

$P_{wetted} = 0.4 + (0.5 - 0.398)/2 = 0.451\ m$

$HD\text{-}T = 4A/P_{wetted} = 0.1809\ m$

AdSTM
Advanced Systems Technology and Management, Inc.

CALCULATION WORK SHEET

Subject BETHSY Vessel (L2) Page 84
Prepared by _____ Checked by _____

Elevation : 0.400 - 1.000 m

Internal Structures :

Rings	R1	R2	R3	R4	R5
Rods	Y	Y	NA	NA	NA
Thimbles	Y	Y	NA	NA	NA
Baffle	NA	NA	NA	NA	NA
Tie Rods	NA	NA	Y	NA	NA
Spacers	Y	Y	NA	NA	NA

Spacer grid locations in the lower plenum.

0.500 , 0.736 , 0.966 , 1.196

- At the grid spacer, the flow area is reduced to 78% of the flow area away from the spacer.

- K Factors at the upper boundary of Level 1 and at the upper boundary of L2 account for the loss pressure at the spacers (0.500 , 0.736) and (0.966 , 1.196)

AdSTM
Advanced Systems Technology and Management, Inc.

CALCULATION WORK SHEET

Subject Level 2 - Cell 1 Page 85 1
Prepared by _____ Checked by _____

No. of HRs : 56

No. of thimbles : 8 1/3

Elev : 0.400 - 1.000

FRVOL

total Volume $= \frac{1}{3} \cdot \frac{\pi}{4} \cdot (0.2)^2 \cdot (0.6)$

$= 6.28 \times 10^{-3}\ m^3$

Volume occupied by HRs and thimbles.

$56 \times \frac{\pi}{4} \times (9.5e-3)^2 \times 0.6 = 2.38 \times 10^{-3}\ m^3$

$8\frac{1}{3} \times \frac{\pi}{4} \times (12e-3)^2 \times 0.6 = 5.65 \times 10^{-4}\ m^3$

Fluid Volume

$3.33 \times 10^{-3}\ m^3$

FRVOL = 0.531

AdSTM
Advanced Systems Technology and Management, Inc.

CALCULATION WORK SHEET

Subject Level 2 - Cell 1 Page 861
Prepared by _____ Checked by _____

FRFA - Z

Total Area $= \frac{1}{3} \cdot \pi \cdot (0.1)^2 = 1.0467 \times 10^{-2}\ m^2$

Area occupied by the heater rods

$= 56 \cdot \pi\ (9.5e-3)^2/4 = 3.967 \times 10^{-3}\ m^2$

Area occupied by the thimble tubes.

$= 8\frac{1}{2} \times 3.14 \times (12e-3)^2/4 = 9.42 \times 10^{-4}\ m^2$

Flow Area away from spacer

$1.0467 \times 10^{-2} - 9.42 \times 10^{-4} - 3.967 \times 10^{-3}$

$= 5.56 \times 10^{-3}\ m^2$

Flow Area at the spacer

$5.56 \times 10^{-3} \times 0.78 = 4.33 \times 10^{-3}$

$FRFA - Z = \frac{4.33 \times 10^{-3}}{1.0467 \times 10^{-2}} = 0.414$

AdSTM
Advanced Systems Technology and Management, Inc.

CALCULATION WORK SHEET

Subject: Level 2 - Cell 1 Page: 87
Prepared by: Checked by:

HD-2

P_{wetted} (HDS) = 56 × 3.14 × (9.5e-3) = 1.67 m

P_{wetted} (thimbles) = 8 1/3 × 3.14 × (12e-3) = 0.314 m

$$HD-2 = \frac{4 \times 5.56 \times 10^{-3}}{(1.67 + 0.314)} = 1.119 \times 10^{-2} \text{ m}$$

FRFA-R 0.444 (the same as that for Cell 1, Level 1)

HD-R 0.0152 m (the same as that for Cell 1, Level 1)

CFZ-R 0.0

FRFA-T

Compared to Cell 1 of Level 1, the short thimble tube at (0,3) should be taken into account (See related discussion of Cell 1, Level 1)

For the thimble at (0,3)

$h = 3.293$, $2c = 2\sqrt{6^2 - 3.293^2} = 10.03$

$$FRFA-T = 1 - \frac{\bar{z} C_i}{0.1} = 1 - \frac{0.0321 + 0.01}{0.1} = 0.579$$

$$FA-T = 0.579 \times 0.6 \times 0.1 = 0.03474 \text{ m}^2$$

AdSTM
Advanced Systems Technology and Management, Inc.

CALCULATION WORK SHEET

Subject Level-2 Cell-1 Page 88
Prepared by _____ Checked by _____

HD-T

$$P_{wetted} = 2 \times 5 \times 0.6 + 0.1 = 6.1 \text{ m}$$

$$HD\text{-}T = \frac{4 \times 0.03474}{6.1} = 0.02278 \text{ m}$$

AdSTM
Advanced Systems Technology and Management, Inc.

CALCULATION WORK SHEET

Subject Level 2 - Cell 2 Page 391
Prepared by _____ Checked by _____

FRVOL, FRFA-Z, FRFA-R, HD-Z and HD-R of Cell 2 of Level 2 have the same values as those of that of Cell 1 of Level 2:

FRVOL = 0.531

FRFA-Z = 0.414

FRFA-R = 0.444

HD-Z = 1.119×10^{-2} m

HD-R = 0.0152 m

FRFA-T and HD-T are assumed to be the same as those for Cell 2 of Level 1 by neglecting the fact that the thimble tube is not present in Level 1.

FRFA-T = 0.5216

HD-T = 0.02036 m

AdSTM
Advanced Systems Technology and Management, Inc.

CALCULATION WORK SHEET

Subject Level 2 - Cell 3 Page 901
Prepared by _____ Checked by _____

FRVOL, FRFA-Z, FRFA-R, HD-Z and HD-R of Cell 3 of Level 2 are the same as those of Cell 1 of Level 2:

FRVOL = 0.531

FRFA-Z = 0.614

FRFA-R = 0.444

HD-Z = 1.119×10^{-2} m

HD-R = 0.0152 m

The values of FRFA-T and HD-T are assumed to be the same as those for Cell 3 - Level 1 by neglecting that the thimble tube is not present in Level 1.

FRFA-T = 0.575

HD-T = 0.01388 m

AdSTM
Advanced Systems Technology and Management, Inc.

CALCULATION WORK SHEET

Subject Level 2 - Cells 4-6 Page 911
Prepared by _____ Checked by _____

Cells 4-6 are in ring 2 (Figure 4):

$R1 = 0.1\ m$

$R2 = 0.156\ m$

Rods and thimbles distribution among the cells are:

	HRs	Thimble tubes
Cell 4	87	2
Cell 5	88	1
Cell 6	85	1

AdSTM
Advanced Systems Technology and Management, Inc.

CALCULATION WORK SHEET

Subject: level 2 - Cell 4 Page: 921
Prepared by: Checked by:

FRVOL

$$\text{total volume} = \frac{1}{3} \cdot \pi \left(0.156^2 - 0.1^2\right) \cdot (0.6) = 9.003 \times 10^{-3}\ m^3$$

Volume occupied by HRs and thimble tubes:

$$87 \times \frac{\pi}{4} \times (9.5e-3)^2 \times 0.6 = 3.698 \times 10^{-3}\ m^3$$

$$\frac{\pi}{4} \times (12e-3)^2 \times 0.6 = 6.782 \times 10^{-5}\ m^3$$

$$\text{Fluid Volume} = 5.305 \times 10^{-3}\ m^3$$

$$FRVOL = \frac{5.305 \times 10^{-3}}{9.003 \times 10^{-3}} = 0.589$$

CALCULATION WORK SHEET

Subject Level 2 - Cell 4 Page 931
Prepared by _____ Checked by _____

FRFA-Z

total flow area $= \frac{\pi}{3} \times \frac{1}{4}(0.312 - 0.2^2) = 0.0150\ m^2$

Area occupied by heater rods

$$87 \times \frac{\pi}{4} \times (9.5e-3)^2 = 6.164 \times 10^{-3}\ m^2$$

Area occupied by thimble tubes

$$2 \times \frac{\pi}{4} \times (12e-3)^2 = 2.26 \times 10^{-4}\ m^2$$

flow area away from spacers

$$0.0150 - 6.164 \times 10^{-3} - 2.26 \times 10^{-4}\ m^2$$

$$= 8.615 \times 10^{-3}\ m^2$$

flow area at a spacer grid

$$8.615 \times 10^{-3} \times 0.78 = 6.720 \times 10^{-3}\ m^2$$

$$FRFA\text{-}Z = \frac{6.72}{15} = 0.448$$

AdSTM
Advanced Systems Technology and Management, Inc.

CALCULATION WORK SHEET

Subject Level 2 - Cell 4 Page 94
Prepared by _____ Checked by _____

HD-Z

P_{wetted} (HRS) = 87 × 3.14 × (9.5e-3) = 2.595 m

P_{wetted} (thimbles) = 2 × 3.14 × (12e-3) = 0.07536 m

$$HD\text{-}Z = \frac{4 \times 8.615 \times 10^{-3}}{2.595 + 0.07536} = 0.012905 \text{ m}$$

CFZ-Z

CFZ-Z is determined as discussed in Page 14 of this Calculation note. A value of 2.7132×10^{-3} is used in the input deck.

FRFA-R 1.0

HD-R P_{wetted} = 0.0

HD-R = +∞ ; A value of HD-R = 10^5 is used in the input deck.

CFZ-R 0.0

FRFA-T 0.37 (The same as that of Cell 4 of Level 1)

FA = $1.2654 \times 10^{-2} m^2$

HD-T P_{wetted} = 4 × 0.6 × 2 = 4.8 m , HD-T = 0.010545 m

AdSTM
Advanced Systems Technology and Management, Inc.

CALCULATION WORK SHEET

Subject Level 2 - Cell 5 Page 951
Prepared by _____ Checked by _____

FRVOL = 0.5845
FRFA-Z = 0.450
FRFA-R = 1.0
FRFA-T = 0.629
HD-Z = 1.300×10^{-2} m
HD-R = $+\infty$

the same as those for Cell 5 of Level 1

HD-T : Pwetted = $3 \times 2 \times 0.6 = 3.6$ m

FA-T = $0.6 \times \frac{0.312-0.2}{2} = 0.02156$ m^2

HD-T = 0.0239 m

CALCULATION WORK SHEET

Subject Level 2 - Cell 6 Page 96 1
Prepared by _____ Checked by _____

No. of Heater Rods = 85

No. of thimble tubes : 1

FRVOL

total volume = 9.003×10^{-3} m^3 (Same as that of Cell 4)

Volume of heater rods:

$$0.6 \times 85 \times \frac{\pi}{4} \times (9.5e-3)^2 = 3.613 \times 10^{-3} \text{ m}^3$$

$$0.6 \times \frac{\pi}{4} \times (12e^{-3})^2 = 6.78 \times 10^{-5} \text{ m}^3$$

Fluid Volume = 5.387×10^{-3} m^3

FRVOL = 0.599

AdSTM
Advanced Systems Technology and Management, Inc.

CALCULATION WORK SHEET

Subject Level 2 - Cell 6 Page 97

Prepared by _____ Checked by _____

FRFA - Z = 0.461

HD - Z = 1.379×10^{-2} m

CFZ - Z = 3.3422×10^{-3}

FRFA - R = 1.0

HD - R = 0.0

Same as those for Cell 6 of Level 1

FRFA - T = 0.6302

HD - T

$P_{wetted} = 2 \times 3 \times 0.6 = 3.6$ m

$$HD\text{-}T \quad \frac{4 \times FA\text{-}T}{3.6} = \frac{0.6302 \times 0.057 \times 0.6 \times 4}{3.6} = 0.0239 \ m^2$$

CFZ - T = 0.0

CALCULATION WORK SHEET

Subject: Level 2 - Cells 7 and 9 Page 981
Prepared by _____ Checked by _____

Cell 7 and Cell 9 have the same geometry and hydraulic parameters.

FRVOL

0.913 (same as that for Cell 7/9 of level 1)

FRFA-Z

0.913 (same as that for Cell 7/9 of level 1)

HD-Z

0.1472 (same as that for Cell 7/9 of level 1)

CFZ-Z

0.0

FRFA-R

1.0

HD-R

flow area = 0.1436 (same as that for Cell 7/9 of level 1)

$P_{wetted} = 0$

HD-R = ∞

CFZ-R

CFZ-R = 0.0

AdSTM
Advanced Systems Technology and Management, Inc.

CALCULATION WORK SHEET

Subject: Level 2 - Cells 7 and 9 Page 99,
Prepared by _____ Checked by _____

FRFA-T

1.0

HD-T

flow area = 0.0062 m^2

$P_{wetted} = 0$

HD-T = ∞

CFZ-T

0.0

CALCULATION WORK SHEET

Subject: Level 2 - Cell 8 Page 100 1
Prepared by _____ Checked by _____

FRVOL

0.942 (same as that for Cell 8 of level 1)

FRFA-Z

0.942 (same as that for Cell 8 of level 1)

HD-Z

0.2278 (same as that for Cell 8 of level 1)

CFZ-Z

0.0

FRFA-R

1.0

HD-R

flow area = 0.1436 (same as that for Cell 8 of level 1)

$P_{wetted} = 0$

HD-R = ∞

CFZ-R

CFZ-R = 0.0

AdSTM
Advanced Systems Technology and Management, Inc.

CALCULATION WORK SHEET

Subject: Level 2 - Cell 8 Page 10/1
Prepared by _____ Checked by _____

FRFA-T

1.0

HD-T

flow area = 0.0062 m^2

$P_{wetted} = 0$

HD-$\tau = \infty$

CFZ-T

0.0

CALCULATION WORK SHEET

Subject: Level 2 - Cells 10 - 12 Page 1021
Prepared by _____ Checked by _____

In level 2, Cells 10-12 are identical. There is no internal structure in these cells. The downcomer shroud ends at the upper boundary of Level 2. The thickness of the downcomer shroud is 10 mm.

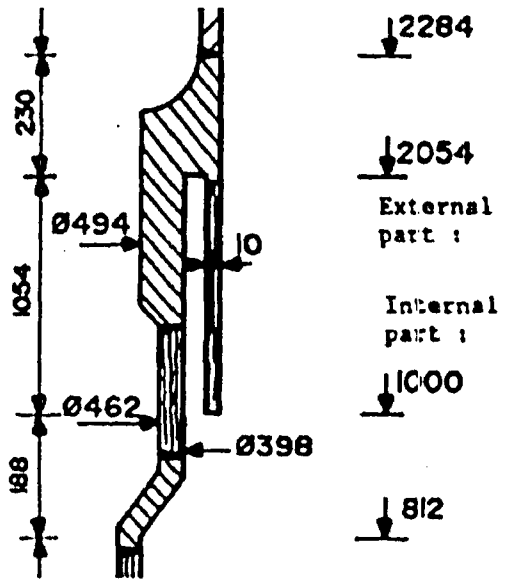

$$R_3 = \frac{343}{2} = 171.5mm$$

$$R_4 = \frac{398}{2} = 199mm$$

elevation: 0.4 - 1.0 m

FRVOL

1.0

FRFA-Z

total area:

$$\frac{\pi}{4} \times (0.398^2 - 0.343^2) = 0.0320\ m^2$$

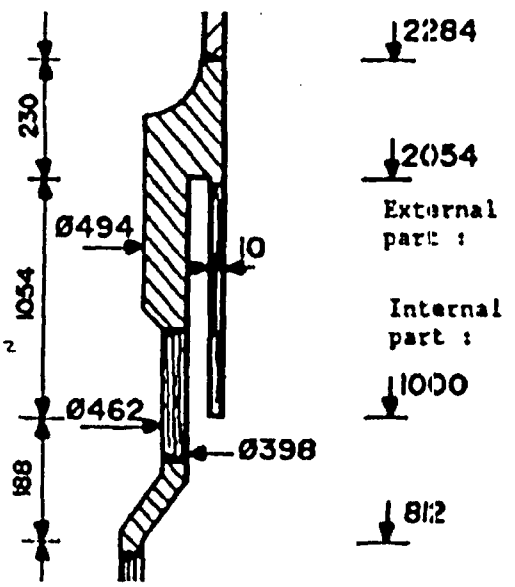

area occupied by the downcomer shroud:

$$\frac{\pi}{4} \times [(0.343 + 0.02)^2 - 0.343^2] = 1.11 \times 10^{-2}\ m^2$$

fluid area:

$$0.320 - 1.11 \times 10^{-2} = 2.091 \times 10^{-2}\ m^2$$

FRFA-Z = 0.6535

CALCULATION WORK SHEET

Subject: Level 2 - Cells 10-12 Page 1031
Prepared by _____ Checked by _____

HD-Z

$P_{wetted} = 3.14 \times 0.363 = 1.140\ m$

$$HD\text{-}Z = \frac{4 \times 2.091 \times 10^{-2}}{1.140} = 0.0734\ m$$

CFZ-Z 0.0

FRFA-R

total area:

$0.600 \times 3.14 \times 0.398$

$= 0.750\ m^2$

flow area:

$(0.900 - 0.400) \times 3.14 \times 0.398$

$= 0.625\ m^2$

$$FRFA\text{-}R = \frac{0.625}{0.750} = 0.833$$

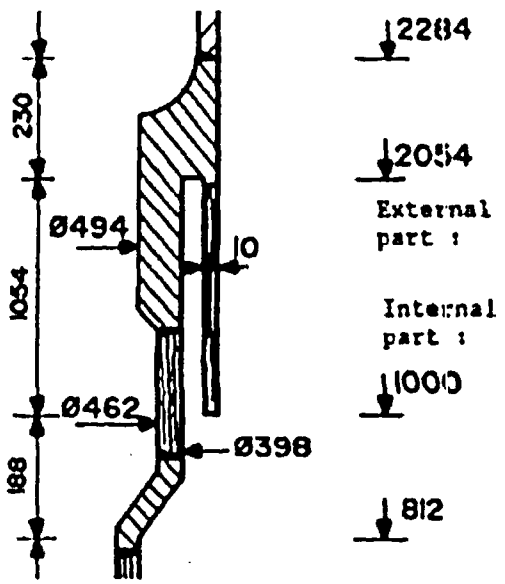

HD-R

$P_{wetted} = 0.0$

HD-R $\approx +\infty$ (10^5 is used in the input deck)

CFZ-R 0.0

AdSTM
Advanced Systems Technology and Management, Inc.

CALCULATION WORK SHEET

Subject: Level 2 – Cells 10-12 Page 1041
Prepared by _____ Checked by _____

FRFA-T 1.0

HD-T

flow area = 0.6 x (0.398 - 0.343)/2

= 0.0165 (m^2)

P_{wetted} = 1.0 - 0.9 = 0.1 m

HD-T = 4 x 0.0165 / 0.1 = 0.66 m

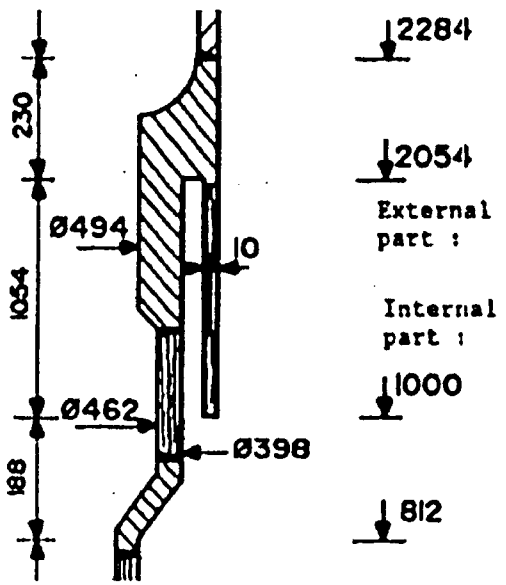

CFZ-T 0.0

CALCULATION WORK SHEET

Subject Level 2 - Cells 13:15 Page 1051
Prepared by _____ Checked by _____

In level 2, Cells 13-15 (Ring 5) are identical. There is no internal structure in these cells.

$$R_4 = \frac{398}{2} = 199mm$$

$$R_5 = \frac{500}{2} = 250mm$$

elevation: 0.4 - 1.0 m

FRVOL $= \dfrac{2.984 \times 10^{-2}}{4.314 \times 10^{-2}} = 0.6917$

total volume:

$$0.6 \times 3.14 \times \frac{1}{4} \times (0.5^2 - 0.398^2)$$

$$= 4.314 \times 10^{-2} \ m^3$$

fluid volume:

$$= (0.812 - 0.4) \times \frac{3.14}{4} \times (0.5^2 - 0.398^2)$$

$$+ V_3 - (0.9 - 0.812) \times \frac{3.14}{4} \times 0.398^2$$

$$= 2.962 \times 10^{-2} + 1.116 \times 10^{-2} - 1.094 \times 10^{-2}$$

$$= 2.984 \times 10^{-2} \ m^3$$

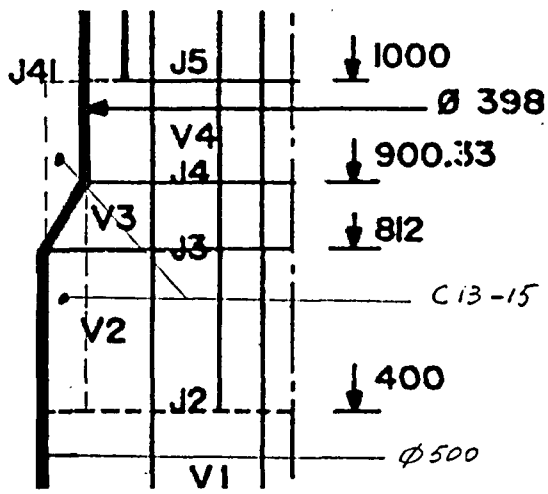

FRFA-Z

fluid area: 0.0

FRFA-Z = 0.0

HD-Z 0.0

CFZ-Z 0.0

FRFA-R 0.0

CALCULATION WORK SHEET

Subject Level 2 - Cells 13 - 15 Page 1061
Prepared by _____ Checked by _____

HD-R 0.0

CFZ-R 0.0

FRFA-T

total area = $0.6 \times (0.5 - 0.398)/2 = 3.06 \times 10^{-2}\ m^2$

flow area = $(0.812 - 0.4) \times (0.5 - 0.398)/2 + (0.900 - 0.812) \times (0.5 - 0.398)/2 \times$

$= 2.326 \times 10^{-2}\ m^2$

FRFA-T = $2.326 / 3.06 = 0.76$

HD-T

$P_{wetted} = (0.812 - 0.4) + \left(\left[(0.5 - 0.398)/2\right]^2 + (0.900 - 0.812)^2\right)^{\frac{1}{2}}$

$= 0.412 + 0.1017 = 0.5137\ m$

HD-T = $4 \times 2.326 \times 10^{-2} / 0.5137 = 0.1811\ m$

CFZ-T 0.0

AdSTM
Advanced Systems Technology and Management, Inc.

CALCULATION WORK SHEET

Subject: _____ Page 107 1

Prepared by _____ Checked by _____

LEVEL 3

1.000 - 1.854 m

CALCULATION WORK SHEET

Subject: Level 3 Page 108.1
Prepared by _____ Checked by _____

elevation: 1.0-1.854m

structures

RINGS	R1[2]	R2[2]	R3	R4	R5
heater rods	Y	Y	NA	NA	-
thimbles	Y	Y	NA	NA	-
tie rods	NA	NA	Y	NA	-
baffle	NA	NA	NA	NA	-
downcomer shroud	NA	NA	NA	Y	-
spacer grids[1]	Y	Y	NA	NA	-

1. Level 3 contains one spacer grid at elevation 1.696, which is accounted for at the upper boundary of the Level 3.

2. FRVOL, FRFA-Z, FRFA-Y, FRFA-T, HD-Z, HD-R and HD-T are the same for the cells in R1 for the L2 and L3; these parameters are also the same for the cells in R2 for L3 and L2.

3. Cells in Ring 5 are void.

AdSTM
Advanced Systems Technology and Management, Inc.

CALCULATION WORK SHEET

Subject: Level 3 - Cell 7 and Cell 9 Page 1091
Prepared by _____ Checked by _____

In Level 3, Cell 7 and Cell 9 have the same geometry and hydraulic parameters.

FRVOL

0.913
(same as that for Cell 7/9 of level 2)

FRFA-Z

0.913
(same as that for Cell 7/9 of level 2)

HD-Z

flow area = $4.852 \times 10^{-3}\ m^2$
(same as that of Cell 7/9 of level 2)

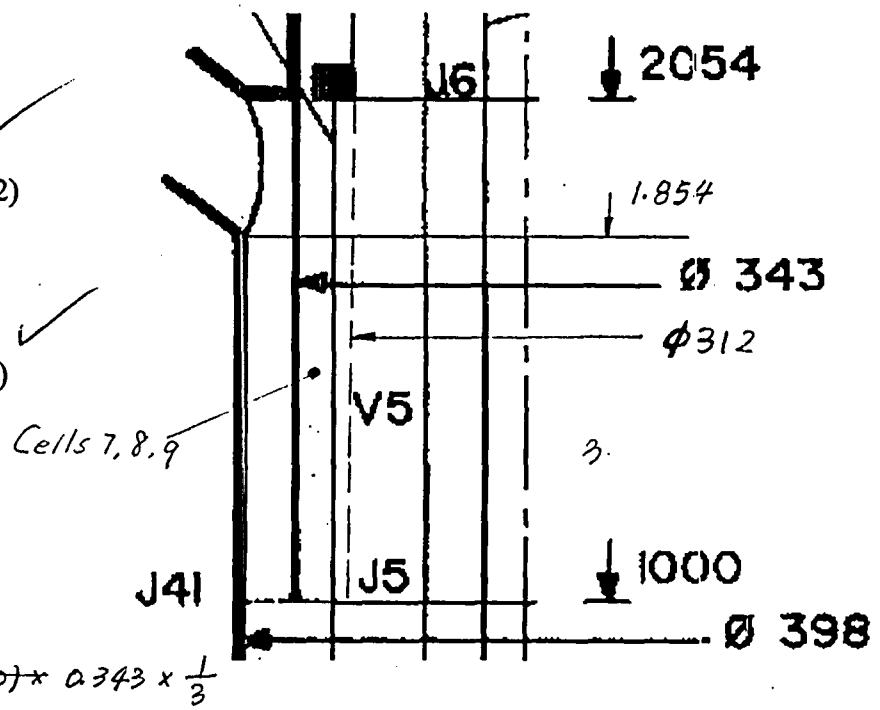

$P_{wetted} = 3.14 \times (14e-3) \times 3$

$+ 3.14 \times \cancel{(1.854 - 1.0) \times} 0.343 \times \frac{1}{3}$

$= 0.491\ m$

$HD\text{-}Z = \frac{4A}{P_{wetted}} = 0.0395\ m$

CFZ-Z

0.0

CALCULATION WORK SHEET

Subject: Level 3 - Cells 7/9 Page 1/01
Prepared by _____ Checked by _____

FRFA-R

0.0

HD-R

HD-R =0.0

CFZ-R

CFZ-R = 0.0

FRFA-T

1.0

HD-T

flow area = 0.0062 m^2
(same as that of Cell 7/9 in level 2)

P_{wetted} = 1.854 - 1.0 = 0.854 m

HD-T = 4A/Pwetted = $\frac{4 \cdot 0.0062}{.854}$ = 0.02904 m

CFZ-T 0.0

AdSTM
Advanced Systems Technology and Management, Inc.

CALCULATION WORK SHEET

Subject: Level 3 - Cell 8 Page 1/1
Prepared by _____ Checked by _____

FRVOL

0.942
(same as that for Cell 8 of level 2)

FRFA-Z

0.942
(same as that for Cell 8 of level 2)

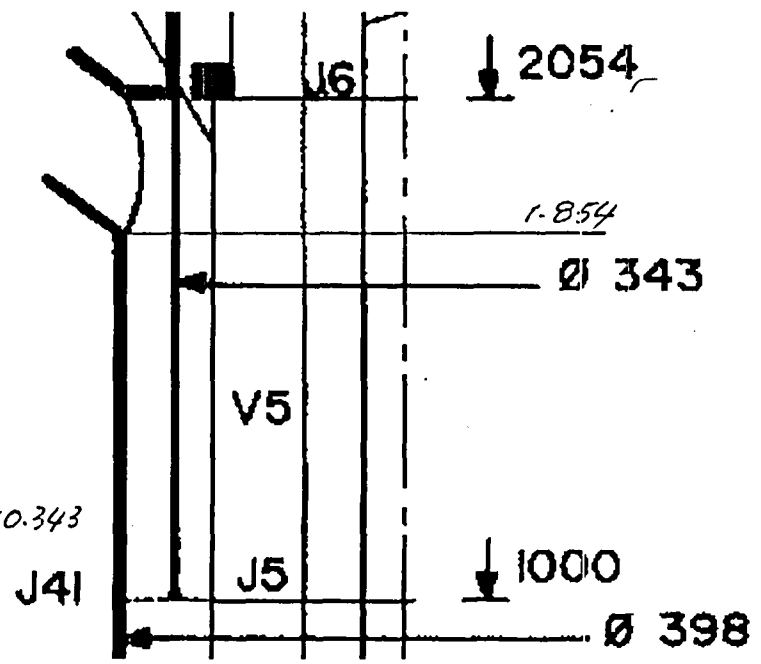

HD-Z

flow area = 5.006×10^{-3}
(same as that of Cell 8 of level 2)

$P_{wetted} = 2 \times 3.14 \times (14e-3) + \frac{1}{3} \times 3.14 \times 0.343$

$= 0.447$ m

HD-Z = 0.00448 m

CFZ-Z

0.0

AdSTM
Advanced Systems Technology and Management, Inc.

CALCULATION WORK SHEET

Subject: Level 3 - Cell 8 Page 1121
Prepared by _____ Checked by _____

FRFA-R

0.0

HD-R

HD-R = 0.0

CFZ-R

CFZ-R = 0.0

FRFA-T

1.0

HD-T

flow area = 0.0062 m^2
(same as that of Cell 7/9 in level 2)

P_{wetted} = (1.854 - 1.0) = 0.854

$$HD- = \frac{4A}{P_{wetted}} = 0.02904\ m$$

CFZ-T 0.0

CALCULATION WORK SHEET

Subject: Level 3 - Cell 10-12 Page 1131
Prepared by _____ Checked by _____

Cells 10-12 (in ring 4) are identical. The downcomer shroud is represented with these cells.

FRVOL

total volume $(1.854 - 1.000) \times 3.14 \times (0.398^2 - 0.343^2)$

$= 0.1093 \ m^3$

fluid volume

$(1.854 - 1.00) \times 3.14 \times (0.398^2 - 0.353^2) = 0.09062$

FRVOL $= \dfrac{0.09062}{0.1093} = 0.8291$

FRFA-Z

total area $= \dfrac{3.14}{4} \times (0.398^2 - 0.343^2)$

flow area $= \dfrac{3.14}{4} \times (0.398^2 - 0.353^2)$

FRFA-Z $= 0.8291$

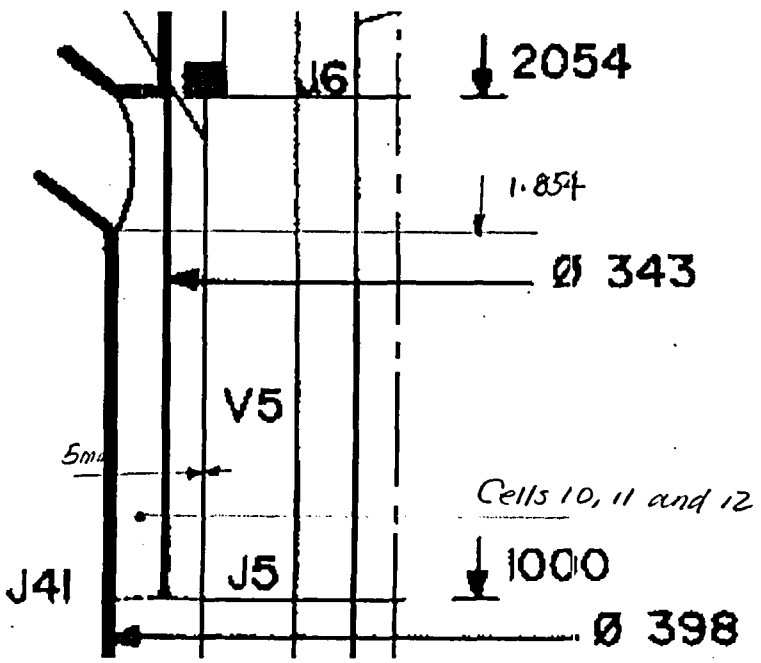

AdSTM
Advanced Systems Technology and Management, Inc.

CALCULATION WORK SHEET

Subject: Level 3 - Cell 10 - 12 Page 1141
Prepared by _____ Checked by _____

HD-Z

$P_{wetted} = 3.14 \times (0.398 + 0.363)$

$$HD\text{-}Z = \frac{4A}{P_{wetted}} = \frac{4 \times \frac{\pi}{4} \times (0.398^2 - 0.353^2)}{3.14 \times (0.398 + 0.353)} = 0.045\ m$$

CFZ-Z

0.0

FRFA-R

0.0

HD-R

HD-Z = 0.0

CFZ-R

CFZ-R = 0.0

AdSTM
Advanced Systems Technology and Management, Inc.

CALCULATION WORK SHEET

Subject: Level 3 - Cells 10-12 Page 115 1
Prepared by _____ Checked by _____

FRFA-T

$$\frac{0.398 - 0.353}{0.398 - 0.343} = 0.818$$

HD-T

flow area = (1.854 - 1.000) x (0.398 - 0.353)/2

P_{wetted} = (1.854 - 1.000) x 2

$$HD\text{-}T = \frac{4A}{P_{wetted}} = 0.045 \text{ m}$$

CFZ-T 0.0

AdSTM
Advanced Systems Technology and Management, Inc.

CALCULATION WORK SHEET

Subject: _____ Page 116 1

Prepared by _____ Checked by _____

LEVEL 4

1.854 - 2.054

CALCULATION WORK SHEET

Subject: _____ Page 117

Prepared by _____ Checked by _____

Level 4 extends from EL1.854-EL2.054m as shown in the figures on next page. Level 4 does not contain spacer grids. The spacer grid at the core inlet, 2.196 m, is accounted for at the upper boundary of the Level 4. The parameters - FRVOL, FRFA-Z, FRFA-Y, FRFA-T, HD-Z, HD-R and HD-T, are the same for the relative cells in rings 1, 2, 4 of Level 4 and Level 3.

Level 4 provides a source connecting the external downcomer pipe:

* level	cell	face	junction
4	10	3	400420

CALCULATION WORK SHEET

Subject: Level 4 - Cells 7-9 Page 1181
Prepared by _____ Checked by _____

The geometry and hydraulic parameters of cells in ring 3 of Level 4 are the same as those for their corresponding cells in level 3 except for z-direction.

Assumption: two orifices are in are in Cell 7; one office in Cell 8 and Cell 9.

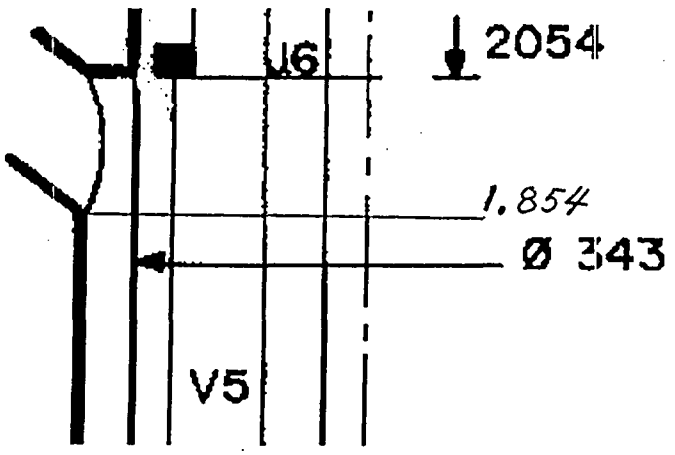

Cell 7

FRFA-Z

total area:

$$\frac{1}{3} \times \frac{\pi}{4} \times (0.343^2 - 0.312^2)$$

$$= 5.313 \times 10^{-3}\ m^2$$

flow area:

$$\frac{1}{3} \times \frac{\pi}{4} \times (0.343^2 - 0.339^2) + 2 \times (0.048 \times 0.015)$$

$$= 1.667 \times 10^{-3}\ m^2$$

$$\text{FRFA-Z} = \frac{1.667}{5.313} = 0.3138$$

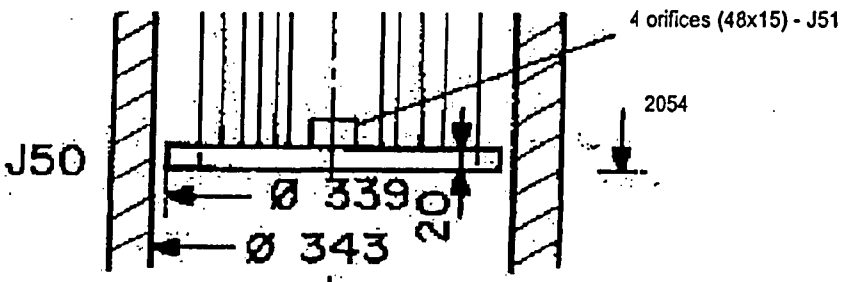

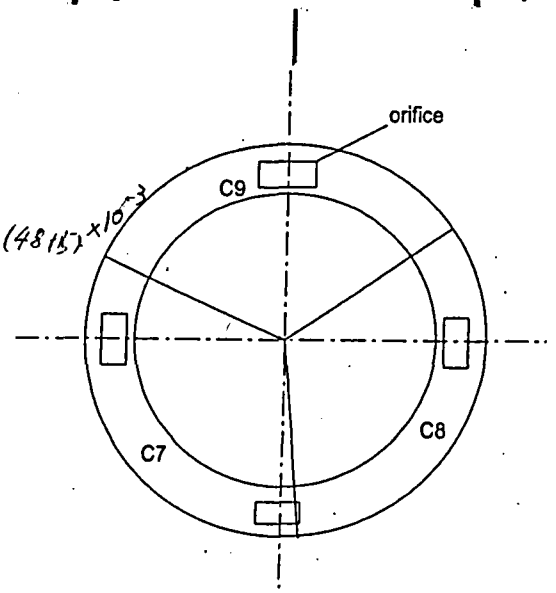

HD-Z

$$P_{wetted} = 3.14 \times (0.343 + 0.339) + \frac{1}{3} \times 2 \times 2 \times (48 \times 15) \times 10^{-3}$$

$$= 0.9636\ m$$

$$\text{HD-Z} = 4A/P_{wetted} = 6.922 \times 10^{-3}\ m$$

AdSTM
Advanced Systems Technology and Management, Inc.

CALCULATION WORK SHEET

Subject: Level 4 - Cells 7-9 Page 1191
Prepared by _____ Checked by _____
(RELAP Cal notebook)

CFZ-Z

INEL used K = 13.5. Because it is impossible to derive the K value based on the information we have. K = 13.5 is used in the input deck. FRIC is 8.7089×10^{-2} according to the K-Fric Conversion Equation on page 39.

Cells 8 and 9

FRFA-Z

total area: $5.313 \times 10^{-3}\ m^3$ (Same as that of Cell 7)

flow area: $1.667 \times 10^{-3} - 48 \times 15 \times 10^{-6} = 9.47 \times 10^{-4}\ m^2$
(Cell 7) (48x15 orifice)

FRFA-Z = 0.178

HD-Z

$P_{wetted} = 0.9636 - 2 \times (48+15) \times 10^{-3} = 0.8376$
(Cell 7) (48x15 orifice)

$$HD\text{-}Z = \frac{4 \times 9.47 \times 10^{-4}}{0.8376} = 4.522 \times 10^{-3}\ m$$

CFZ-Z

$K = 13.5$, $FRIC = 8.789 \times 10^{-2}$

CALCULATION WORK SHEET

Subject: _____ Page 120

Prepared by _____ Checked by _____

As shown in the figure on the left, the core region comprises 9 levels (L5-L13). The heated length of the heater rods corresponds to Levels 6-12. The level elevations are selected in such a way that most of spacer grids are located at the level boundaries. As shown in the figure, all but the two spacers at the bottom and top of the core section are located at the level boundaries.

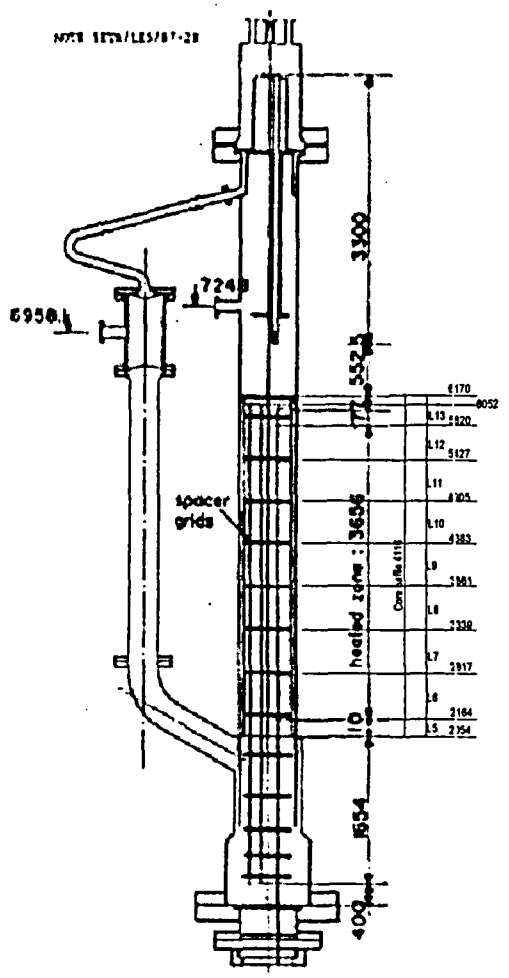

The core bypass is the volume between the core baffle and the vessel wall. The flow area of the core bypass is 1.459×10^{-2} m^2 (V50). There are 8 reformers (figure on the next page) at 8 elevations: 2240.4, 2812.6, 3334.6, 3840.6, 4378.4, 4900.6, 5422.6, and 5958.2. The flow area at a reformer is 2.143×10^{-3} m^2 (J50) and hydraulic diameter is HD = 4.00 mm. In the VESSEL modeling, the reformers are realigned with the level boundaries, which is the elevation of a reformer is assumed to be at its nearest level boundary:

Physical location	Model
2240.4	2164
2812.6	2817
3334.6	3339
3840.6	3861
4378.4	4383
4900.6	4905
5422.6	5427
5958.2	6052

NOTE SETH/LES/87-28 18 / 35

Vol.	L(m)	V = 10^3 (m^3)	Junction	A = 10^2 (m^2)	HD = 10^3 (m)
V50	4.116	58.49	J50	0.2143	4.00
			J51	0.2880	22.86
			J52	1.459	24.7

Table III.3.3

CALCULATION WORK SHEET

Subject: _____ Page 121 1
Prepared by _____ Checked by _____

In the following pages, the geometry and hydraulic parameters will be derived for the cells in these levels. Also, the cells in ring 4 and ring 5 of these levels are void.

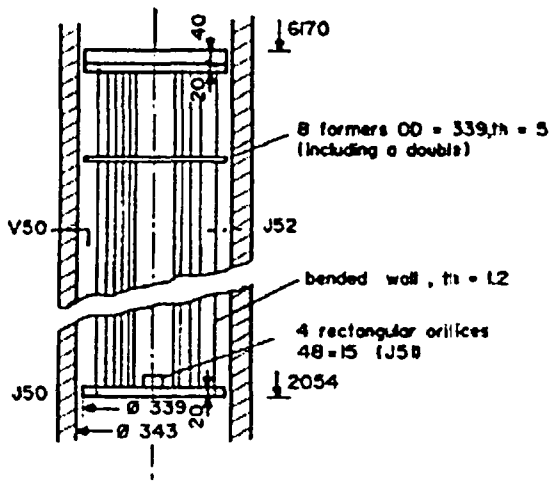

Figure III.2.3: The Core Bypass (Note SETh/LES/87-28)

CALCULATION WORK SHEET

Subject: Level 5 Page 1221
Prepared by _____ Checked by _____

LEVEL 5 - CORE INLET (non-heated level)

Elevation

2.054 - 2.164m (ΔL=0.110 m)

Structures

RINGS	R1	R2	R3	R4	R5
heater rods	Y	Y	NA	-	-
thimbles	Y	Y	NA	-	-
baffle	NA	NA	Y	-	-
spacer grids[1]	Y	Y	NA	-	-
reformers[2]	NA	NA	Y	-	-

1. In the core region (ring 1 and 2), the spacer grid at 2.196 m is relocated at 2.164 m in the model.

2. The mid-plane of the reformer at elev = 2240.4, as discussed earlier, is relocated at elev = 2.164m. In calculating the volume of the cells in ring 3, the reformer at the bottom end of the core bypass should be taken into account.

CALCULATION WORK SHEET

Subject: Level 5 - Cell 1 Page 1231
Prepared by _____ Checked by _____

Cell 1

FRVOL

0.531 - Same as that of Cell 1 in Level 2

FRFA-Z

0.414 - Same as that of Cell 1 in level 2

HD-Z

1.119×10^{-2} m - Same as that of Cell 1 in level 2

CFZ-Z

1.7555e-3

FRFA-R

0.444 - Same as that of Cell 1 in Level 2

HD-R

0.0152 m - Same as that of Cell 1 in Level 2

CFZ-R

0.0

FRFA-T

0.578 - Same as that of Cell 1 of Level 2

HD-T

0.02256 m - Same as that of Cell 1 of Level 2

CALCULATION WORK SHEET

Subject: Level 5 - Cell 2 Page 124
Prepared by _____ Checked by _____

Cell 2

FRVOL

0.531 - Same as that of Cell 2 in Level 2

FRFA-Z

0.414 - Same as that of Cell 2 in level 2

HD-Z

1.119×10^{-2} m - Same as that of Cell 2 in level 2

CFZ-Z

1.7555e-3 - used in the input deck

FRFA-R

0.444 - Same as that of Cell 2 in Level 2

HD-R

0.0152 m - Same as that of Cell 2 in Level 2

CFZ-R

0.0

FRFA-T

0.5216 - Same as that of Cell 2 of Level 2

HD-T

0.02036 m - Same as that of Cell 2 of Level 2

CALCULATION WORK SHEET

Subject: Level 5 - Cell 3 Page 1251
Prepared by _____ Checked by _____

Cell 3

FRVOL

0.531 - Same as that of Cell 3 in Level 2

FRFA-Z

0.414 - Same as that of Cell 2 in level 2

HD-Z

1.119×10^{-2} m - Same as that of Cell 2 in level 2

CFZ-Z

1.755e-3 - used in the input deck

FRFA-R

0.444 - Same as that of Cell 2 in Level 2

HD-R

0.0152 m - Same as that of Cell 2 in Level 2

CFZ-R

0.0

FRFA-T

0.575 - Same as that of Cell 2 of Level 2

HD-T

0.01388 m - Same as that of Cell 2 of Level 2

CALCULATION WORK SHEET

Subject: Level 5 - Cell 4 Page 1261
Prepared by _____ Checked by _____

Cell 4

FRVOL

0.589 - Same as that of Cell 4 in Level 2

FRFA-Z

0.4478 - Same as that of Cell 4 in level 2

HD-Z

flow area: 6.720×10^{-3} m^2 - same as that of Cell 4 in level 2

P_{wetted} (87HRs) = 2.595 m - same as that of Cell 4 of level 2

P_{wetted} (2 thimbles) = 0.07536 m -same as that of Cell 4 of Level 2

P_{wetted} (baffle) = 1.276 m /3 = 0.4253 m (1.276 m - baffle wetted perimeter, Note SETH/LES/87-28)

P_{wetted} = 2.595 + 0.07536 + 0.4253 = 3.096 m

HD-z = 8.683×10^{-3} m

CFZ-Z

1.7462-3 - used in the input deck

FRFA-R

0.0

HD-R

0.0

CFZ-R

0.0

AdSTM
Advanced Systems Technology and Management, Inc.

CALCULATION WORK SHEET

Subject: Level 5 - Cell 4 Page 1271
Prepared by _____ Checked by _____

FRFA-T

0.37 - Same as that of Cell 4 of Level 2

HD-T

flow area: $1.2654 \times 10^{-2} (m^2) \times \frac{(2.164 - 2.054)\,m}{0.6\ m} = 2.32 \times 10^{-3}\ m^2$

FA-T of Cell 4, Level 2 — Length of Level 2

P_{wetted} (rods + thimbles + baffle)

$4\,(2.164 - 2.054) \times 2 + (2.164 - 2.054) = 0.99\ m$

No. of rods/thimbles - See notes for Cell 4, Level 2

HD-T = $\frac{4 \times 2.32 \times 10^{-3}}{0.99} = 9.373 \times 10^{-3}\ m$

AdSTM
Advanced Systems Technology and Management, Inc.

CALCULATION WORK SHEET

Subject: Level 5 - Cell 5 Page 128
Prepared by _____ Checked by _____

Cell 5

FRVOL

0.5845 - Same as that of Cell 5 in Level 2

FRFA-Z

0.450 - Same as that of Cell 5 in level 2

HD-Z

flow area: 8.652×10^{-3} m^2- same as that of Cell 5 in level 2 (away from space)

P_{wetted} (88 HRs) = 2.625 m - same as that of Cell 5 of level 2

P_{wetted} (/ thimbles) = 0.03768 m -same as that of Cell 5 of Level 2

P_{wetted} (baffle) = 1.276 m /3 = 0.4253 m (1.276 m - baffle wetted perimeter, Note SETH/LES/87-28)

P_{wetted} = 2.625 + 0.03768 + 0.4253 = 3.0880 m

$$HD\text{-}z = \frac{4 \times 8.652 \times 10^{-3}}{3.088} = 1.119 \times 10^{-2}\ m$$

CFZ-Z 1.7558×10^{-3} used in the input deck

FRFA-R

0.0

HD-R

0.0

CFZ-R

0.0

FRFA-T

0.629 - Same as that of Cell 5 of Level 2

AdSTM
Advanced Systems Technology and Management, Inc.

CALCULATION WORK SHEET

Subject: Level 5 - Cell 5 Page 1291

Prepared by _____ Checked by _____

HD-T

flow area:

$$0.01435\ m^2 \times \frac{0.110\ m}{0.4\ m} = 3.946 \times 10^{-3}\ m^2$$

Length of Level 2

Length of Level 1

P_{wetted} (rods + thimbles + baffle)

$$= 3 \times 2 \times (2.164 - 2.054) + (2.164 - 2.054)$$

$$= 0.77\ m$$

$$HD\text{-}T = \frac{4A}{P_{wetted}} = \frac{4 \times 3.946 \times 10^{-3}}{0.77} = 0.0205\ m$$

CALCULATION WORK SHEET

Subject: Level 5 - Cell 6 Page 1301
Prepared by _____ Checked by _____

Cell 6

FRVOL

0.599 - Same as that of Cell 6 in Level 2

FRFA-Z

0.461 - Same as that of Cell 6 in level 2

HD-Z

flow area: 8.87×10^{-3} m^2- same as that of Cell 6 in level 2

P_{wetted} (65 HRs) = 2.535 m - same as that of Cell 6 of level 2

P_{wetted} (1 thimbles) = 0.03768 m -same as that of Cell 6 of Level 2

P_{wetted} (baffle) = 1.276 m /3 = 0.4253 m (1.276 m - baffle wetted perimeter, Note SETH/LES/87-28)

P_{wetted} = 2.535 + 0.03768 + 0.4253 = 2.998

$$HD\text{-}z = \frac{4 \times 8.87 \times 10^{-3}}{2.998} = 1.184 \times 10^{-2}\ m$$

CFZ-Z

1.8565×10^{-3} used in the input deck

FRFA-R

0.0

HD-R

0.0

AdSTM
Advanced Systems Technology and Management, Inc.

CALCULATION WORK SHEET

Subject: Level 5 - Cell 6 Page 1311
Prepared by _____ Checked by _____

CFZ-R

0.0

FRFA-T

0.6302 - Same as that of Cell 6 of Level 2

HD-T

flow area: $0.01437\ m^2 \times \frac{0.110\ m}{0.4\ m} = 3.952 \times 10^{-3}\ m^2$

Length of Level 2

Length of Level 1

P_{wetted} (rods + thimbles + baffle) $= 3 \times 0.110 \times 2 + 0.110 = 0.77\ m$

No. of Rods

HD-T = $\frac{4 \times 3.952 \times 10^{-3}}{0.77} = 0.02053\ m$

CALCULATION WORK SHEET

Subject: Level 5 - Cells 7:9 Page 132/
Prepared by _____ Checked by _____

In the VESSEL model, the core bypass region is represented with an annular (Ring 3) as shown in the figures on the right. R2 (312 mm) is determined in order to preserve the flow areas of the core region and the core bypass.

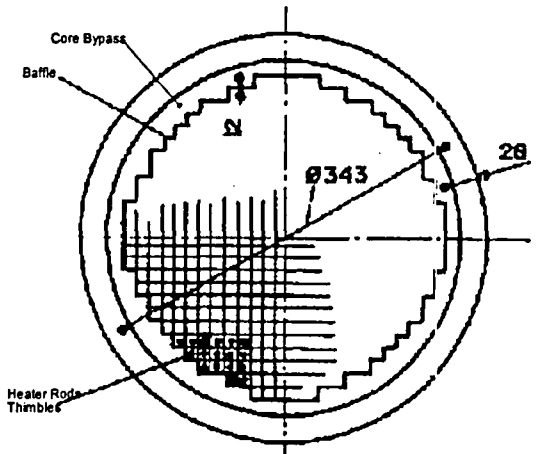

Schematic of core cross section
(Fig. III.1.a, SETh/LES/87-28)

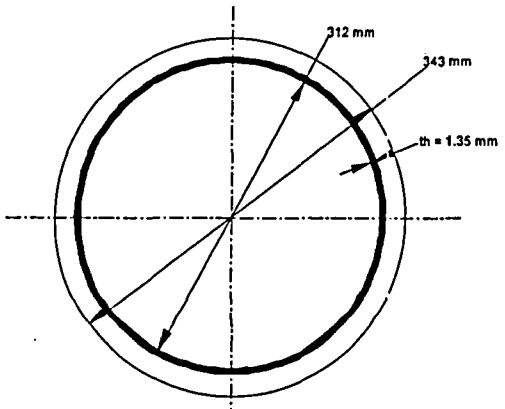

Modeling Core and Core Bypass

The Cells 7-9 in level 5 have the same geometry and hydraulic parameters except for the fluid volume fraction because Cell 7 has two 48x15 orifices in the bottom reformer while Cell 8 and Cell 9 each have one orifice (pl. refer to cal notes related to level 4). In the next few pages, we will derive the geometry and hydraulic parameters for these three cells.

AdSTM
Advanced Systems Technology and Management, Inc.

CALCULATION WORK SHEET

Subject Level 5 - Cell 7 Page 133
Prepared by _____ Checked by _____

FRVOL

$$\text{total Volume} = \frac{1}{3} \times (2.164 - 2.054) \times \frac{\pi}{4} \times (0.343^2 - 0.312^2)$$

$$= 5.84 \times 10^{-4}\ m^3$$

$$\text{Fluid Volume} = \frac{1}{3} \times (2.164 - 2.054 - \underbrace{0.02}_{\text{thickness of bottom reformer}} - \overbrace{0.0025}^{\text{half thickness of the reformer at elev = 2.164 m}}) \times \frac{\pi}{4} (0.343)^2 - (0.312 + 0.002)$$

$$+ \frac{1}{3} \times \underbrace{2.143 \times 10^{-3}}_{\text{area of the annular gap at the reformer}} \times (0.02 + 0.0025) + \overbrace{2 \times 0.02 \times (0.048 \times 0.015)}^{\text{2 orifices in the bottom reformer}}$$

$$= 4.26 \times 10^{-4} + 1.607 \times 10^{-5} + 2.88 \times 10^{-5}$$

$$= 4.71 \times 10^{-4}\ m^3$$

$$FRVOL = \frac{4.71 \times 10^{-4}}{5.84 \times 10^{-4}} = 0.806$$

AdSTM
Advanced Systems Technology and Management, Inc.

CALCULATION WORK SHEET

Subject Level 5 - Cell 7 Page 1341
Prepared by _____ Checked by _____

FRFA - Z

total area $= \frac{1}{3} \times \frac{\pi}{4} \times (0.343^2 - 0.312^2) = 5.313 \times 10^{-3} m^2$

FA-Z $= 2.143 \times 10^{-3} \times \frac{1}{3} = 7.143 \times 10^{-4} m^2$

FRFA-Z = 0.1344

HD - Z

$0.343 - 0.339 = 0.004$ m

CFZ - Z

K = 13.0 - Use INZL value, which will be adjusted to obtain the known given bypass flow rate.

CFZ - Z = 0.6708E-02 is used in the input deck.

FRFA - R

0.0

HD - R

0.0

CFZ - R

0.0

AdSTM
Advanced Systems Technology and Management, Inc.

CALCULATION WORK SHEET

Subject: Level 5 - Cell 7 Page 1351
Prepared by _____ Checked by _____

FRFA-T

total area $(0.343 - 0.312) \times \frac{1}{2} \times (2.164 - 2.054)$

$= 1.705 \times 10^{-3}\ m^2$

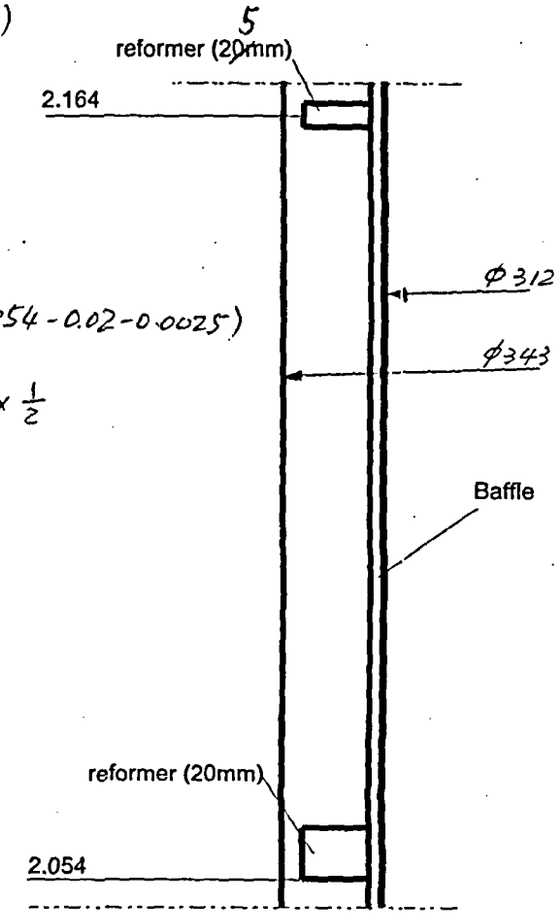

flow area $(0.343 - 0.312 - 0.0027) \times \frac{1}{2} (2.164 - 2.054 - 0.02 - 0.0025)$

$+ (0.02 + 0.0025) \times (0.343 - 0.339) \times \frac{1}{2}$

$= 1.283 \times 10^{-3}\ m^2$

FRFA-T = $\frac{1.283 \times 10^{-3}}{1.705 \times 10^{-3}} = 0.7526$

HD-T

$P_{wetted} = (2.164 - 2.054) \times 2 + 2(0.339 - 0.3147) \times \frac{1}{2}$

$= 0.22 + 0.004 = 0.224\ m$

HD-T = $\frac{4 \times 1.283 \times 10^{-3}}{0.224} = 0.0229\ m$

AdSTM
Advanced Systems Technology and Management, Inc.

CALCULATION WORK SHEET

Subject: Level 5 - Cell 8 and Cell 9 Page 136 1
Prepared by _____ Checked by _____

Cell 8 and Cell 9 are identical for Level 5.

FRVOL

total volume: $5.84 \times 10^{-4} m^3$ -same as that for Cell 7 of this level

fluid volume: $4.71 \times 10^{-4} (m^3)$ (fluid Volume in Cell 7) $- 0.02 \times 0.048 \times 0.015 (m^3)$ (fluid Volume in a 48x15 orifice)

$= 4.57 \times 10^{-4} m^3$

FRVOL = 0.7825

FRFA-Z

total area: $5.313 \times 10^{-3} m^2$ -same as that for Cell 7 of this level

flow area: 7.143×10^{-4} -same as that of Cell 7

FRFA-Z: 0.1344 -same as that of Cell 7

HD-Z 0.004 m -same as that of Cell 7

CFZ-z 13.0

FRFA-R

0.0

HD-R

0.0

CFZ-R 0.0

AdSTM
Advanced Systems Technology and Management, Inc.

CALCULATION WORK SHEET

Subject: Level 5 - Cells 8-9 Page 1371
Prepared by _____ Checked by _____

FRFA-T

0.7526 - same as that of Cell 7

HD-T

0.0229 - same as that of Cell 7

CFZ-t 0.0

CALCULATION WORK SHEET

Subject: Level 6 - Level 12 (Heated Core section) Page 1381
Prepared by _____ Checked by _____

Heated Core Section (LEVEL 6 - Level 12)

The heated core section (3.56m) is represented by 7 levels: L6-L12. These levels have the identical parameters for each corresponding cells: FRVOL, FRFA-Z, FRFA-T, HD-Z, HD-T, HD-R and CFZ-Z/R/T). The parameters of Cells 1-6 of these levels are the same as those of Cells 1-6 of Level 5 except for additive friction coefficient CFZ-Z. Also, the spacer at z = 5.960m is relocated at z = 5.820m. The elevations (z) and level lengths (dz) are listed below for Levels 6-12:

level	z (m)	dz (m)
6	2.817	0.653
7	3.339	0.522
8	3.861	0.522
9	4.383	0.522
10	4.905	0.522
11	5.427	0.522
12	5.82	0.393

Additive fiction coefficients are listed below for Cells 1-6 of Levels 6-12:

Cells	K-factor	HD (m)	DetZ (m)	FRIC
Level 6				
C1-3	3.0400E-001	1.119E-002	1.1750E+000	1.5361E-003
4	3.0400E-001	1.113E-002	1.1750E+000	1.5278E-003
5	3.0400E-001	1.119E-002	1.1750E+000	1.5362E-003
6	3.0400E-001	1.184E-002	1.1750E+000	1.6243E-003
Level 7-11				
C1-3	3.0400E-001	1.119E-002	1.0400E+000	1.6358E-003
4	3.0400E-001	1.113E-002	1.0400E+000	1.6270E-003
5	3.0400E-001	1.119E-002	1.0400E+000	1.6359E-003
6	3.0400E-001	1.184E-002	1.0400E+000	1.7298E-003

AdSTM
Advanced Systems Technology and Management, Inc.

CALCULATION WORK SHEET

Subject: Level 6 - Level 12 (Heated Core Section) Page 1391
Prepared by _____ Checked by _____

Cells	K-factor	HD (m)	DetZ (m)	FRIC
Level 12				
C1-3	3.0400E-001	1.119E-002	3.9000E-001	4.5978E-003
4	3.0400E-001	1.113E-002	3.9000E-001	4.5732E-003
5	3.0400E-001	1.119E-002	3.9000E-001	4.5982E-003
6	3.0400E-001	1.184E-002	3.9000E-001	4.8620E-003

In the following, the parameters for Cell 7 - 9 are derived.

CALCULATION WORK SHEET

Subject: Level 6 - Cells 7, 8 and 9 Page 149
Prepared by _____ Checked by _____

The Cells 7, 8 and 9 are identical.

FRVOL

total vol: $5.84 \times 10^{-4} (m^3) \times \frac{0.653\ m}{0.110\ m}$ — dz of Level 5; dz. Level 6

$= 3.467 \times 10^{-3}\ m^3$

fluid vol: $= \frac{1}{3} \times 2.143 \times 10^{-3} \times 0.005 + \frac{1}{3} \times (0.653 - 0.005) \times \frac{\pi}{4} \times (0.343^2 - 0.3147^2)$

$= 3.16 \times 10^{-3}\ m^3$

FRVOL= 0.9114

FRFA-Z 0.1344 - same as that for Cell 7 in level 5

HD-Z 0.004 , -same as that for Cell 7 in level 5

CFZ-Z K=13.0 $CFZ\text{-}Z = 2.3476 \times 10^{-2}$, Equation 4-4 given on Page 39

FRFA-R 0.0

HD-R 0.0

CFZ-R 0.0

FRFA-T

total area: $1.705 \times 10^{-3}\ m^2 \times \frac{0.653}{0.110} = 0.010122\ m^2$

FA-T of Cell 7 in Level 5; dz of Level 6; dz of Level 6

AdSTM
Advanced Systems Technology and Management, Inc.

CALCULATION WORK SHEET

Subject: Level 6 - Cells 7-9 Page 1501
Prepared by _____ Checked by _____

flow area: $(0.343 - 0.312 - 0.0027) \times \frac{1}{2} \times 0.653$
$- 0.005 \times 0.002$
$= 0.00924\ m^2$

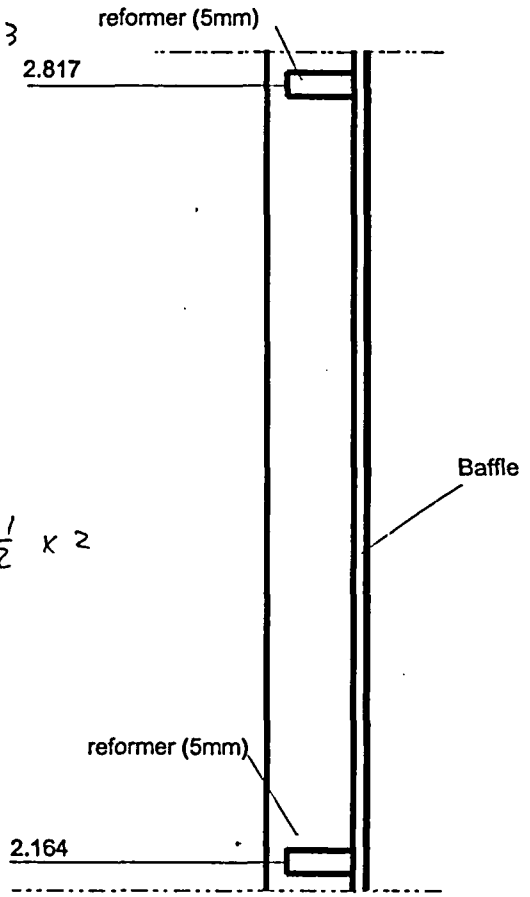

FRFA-T = $\frac{0.00924}{0.010122} = 0.9129$

HD-T

$P_{wetted} = 2 \times 0.653 + (0.339 - 0.3147) \times \frac{1}{2} \times 2$

$= 1.3303\ m$

HD-T = $\frac{4A}{P_{wetted}}$

$= \frac{4 \times 0.00924}{1.3303} = 0.02778\ m$

AdSTM
Advanced Systems Technology and Management, Inc.

CALCULATION WORK SHEET

Subject: Levels 7 - 11 : Cells 7-9 Page 15/1
Prepared by _____ Checked by _____

The Cells 7, 8 and 9 are identical in levels 7 - 11 which have the same dz = 0.520 m.

FRVOL

total Vol. of Cell 7 of Level 5

total vol: $5.84 \times 10^{-4} m^3 \times \frac{0.520}{0.110} = 2.761 \times 10^{-3} m^3$

fluid vol: $\frac{1}{3} \times 2.143 \times 10^{-3} \times 0.005 + \frac{1}{3} \times (0.520 - 0.005) \times \frac{\pi}{4} \times (0.343^2 - 0.3147^2)$

$= 2.512 \times 10^{-3} m^3$

FRVOL= $\frac{2.512 \times 10^{-3}}{2.761 \times 10^{-3}} = 0.910$

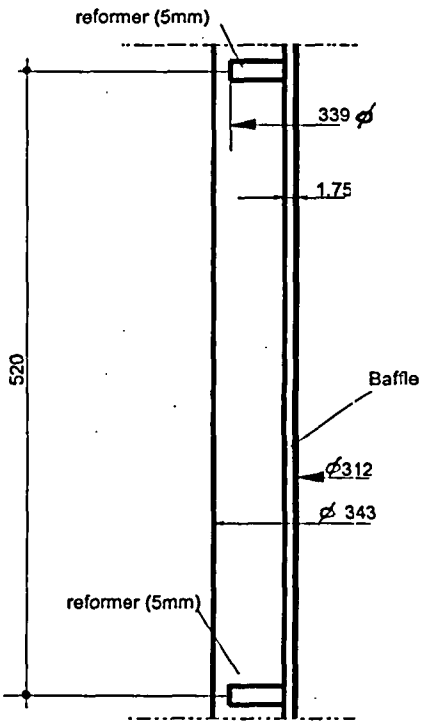

FRFA-Z 0.1344 - same as that for Cell 7 in level 5

HD-Z 0.004 m -same as that for Cell 7 in level 5

CFZ-Z K=13.0 , CFZ-Z = 2.3476×10^{-3}

FRFA-R 0.0

HD-R 0.0

CFZ-R 0.0

FRFA-T

total area: $1.705 \times 10^{-3} m^2 \times \frac{0.520}{0.110} = 8.06 \times 10^{-3} m^3$

CALCULATION WORK SHEET

Subject: Levels 7-11 : Cells 7-9 Page 1521
Prepared by _____ Checked by _____

flow area: $(0.520 - 0.005) \times (0.343 - 0.3147) \times \frac{1}{2} + 0.005 \times 0.002$

$= 7.287 \times 10^{-3}\ m^2$

FRFA-T = $\frac{7.287 \times 10^{-3}}{8.06 \times 10^{-3}} = 0.904$

HD-T

$P_{wetted} = 2 \times 0.520 + (0.339 - 0.3147)$

$= 1.0643\ m$

HD-T = $\frac{4 \times 7.287 \times 10^{-3}}{1.0643} = 2.739 \times 10^{-2}\ m$

AdSTM
Advanced Systems Technology and Management, Inc.

CALCULATION WORK SHEET

Subject: Level 12 - Cells 7-9 Page 1531
Prepared by _____ Checked by _____

The Cells 7, 8 and 9 are identical in Level 12, which have the same dz = 0.393 m.

FRVOL

total vol: $5.84 \times 10^{-3} \times \frac{0.393}{0.110}$

$= 2.086 \times 10^{-3}\ m^3$

fluid vol: $\frac{1}{3} \times 2.143 \times 10^{-3} \times 0.0025 + \frac{1}{3}(0.393 - 0.347)$

$\times \frac{\pi}{4} \times (0.343^2 - 0.3147^2)$

$= 1.904 \times 10^{-3}\ m^3$

FRVOL= $\left(\frac{2.086 \times 10^{-3}}{1.904 \times 10^{-3}}\right)^{-1} = 0.912$

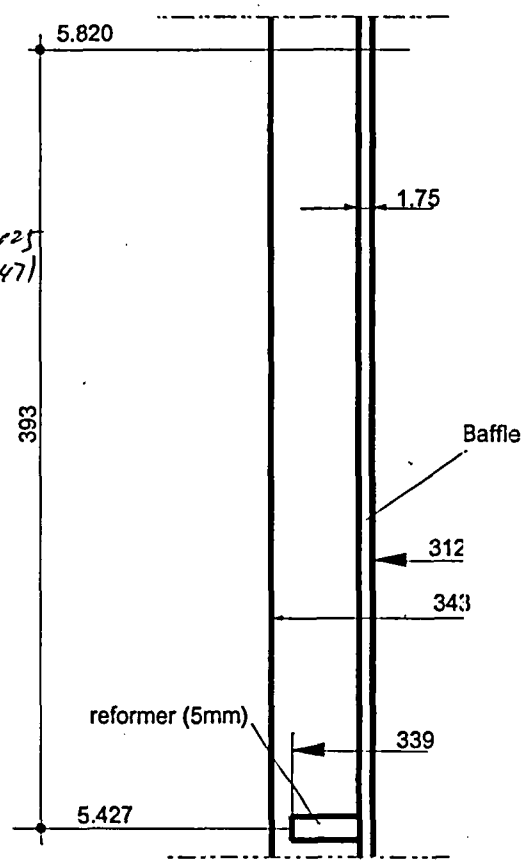

FRFA-Z

total area: $\frac{1}{3} \times \frac{\pi}{4} \times (0.343^2 - 0.312^2)$

$= 5.313 \times 10^{-3}\ m^2$

flow area: $\frac{1}{3} \times \frac{\pi}{4} \times (0.343^2 - 0.3147^2)$

$= 4.87 \times 10^{-3}\ m^2$

FRFA-z = $\frac{4.87 \times 10^{-3}}{5.313 \times 10^{-3}} = 0.917$

AdSTM
Advanced Systems Technology and Management, Inc.

CALCULATION WORK SHEET

Subject: Level 12 - Cells 7-9 Page 1541
Prepared by _____ Checked by _____

HD-Z

$$P_{wetted} = \frac{\pi}{3}(0.343 + 0.3147)$$

$$HD\text{-}Z = \frac{4A}{P_{wetted}} = \frac{4 \times \frac{\pi}{4} \times (0.343^2 - 0.3147^2) \times \frac{1}{3}}{\frac{\pi}{3}(0.343 + 0.3147)} = 0.0283\ m$$

CFZ-Z 0.0

FRFA-R 0.0

HD-R 0.0

CFZ-R 0.0

FRFA-T

total area: $(0.393) \times (0.343 - 0.312^2) \times \frac{1}{2}$

flow area: $\doteq (0.343 - 0.3147) \times \frac{1}{2} \times 0.393 = 5.561 \times 10^{-3}\ m^2$

$$\text{FRFA-T} \doteq \frac{0.343 - 0.3147}{0.343 - 0.312} = \frac{0.0283}{0.031} = 0.913$$

HD-T

$$P_{wetted} \doteq 0.393 \times 2 = 0.786\ m$$

AdSTM
Advanced Systems Technology and Management, Inc.

CALCULATION WORK SHEET

Subject: Level 12 - Cells 7-9 Page 1551
Prepared by _____ Checked by _____

$$\text{HD-T} = \frac{4 \times 5.561 \times 10^{-3}}{0.786} = 0.0283 \text{ m}$$

AdSTM
Advanced Systems Technology and Management, Inc.

CALCULATION WORK SHEET

Subject: _____ Page 156

Prepared by _____ Checked by _____

TOP of CORE (LEVEL 13)

CALCULATION WORK SHEET

Subject: level 13 Page 157
Prepared by _____ Checked by _____

As shown in the figure below, level 13 models the top of core, including the top unheated section and the section on the top of the core and below the upper tie plate.

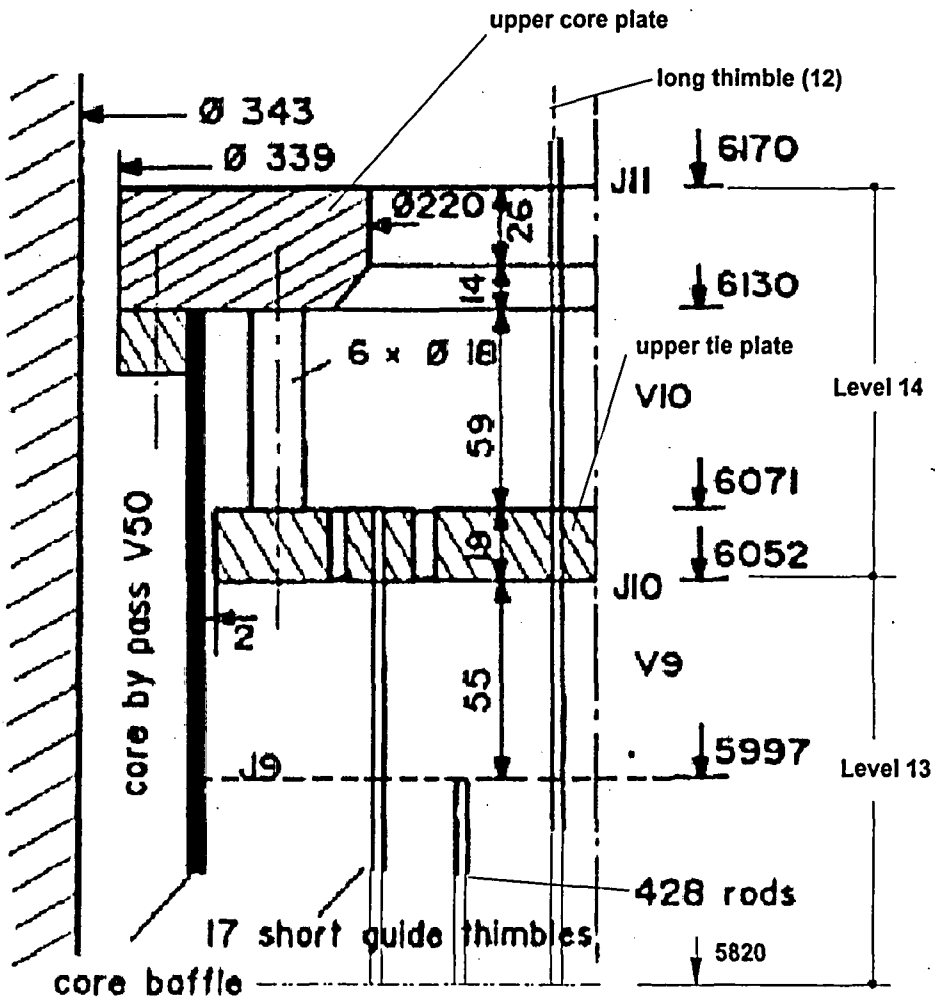

Figure _____ (Figure III.2.2, SETh/LES/87-28)

CALCULATION WORK SHEET

Subject Level 13 - Cells 1 - 3 Page 1581
Prepared by _____ Checked by _____

Assuming that the following parameters are the same for Cells 1-3 in level 13: (See Note for Level 12, Cells 1-3)

FRVOL, FRFA-Z, HD-Z, FRFA-R and HD-R.

No. of HRs. in Ring 1 : 168

No. of guide thimbles (Long + short) : 25

Length of level 13 : 0.232 m (5.820 m - 6.052 m)

Length of HRs in level 13 : 0.177 m

FRVOL

Total Volume :

$$\frac{\pi}{4} \times 0.2^2 \times 0.232 = 7.285 \times 10^{-3}\ m^3$$

Volume of HRs in level 13 :

$$168 \times \frac{\pi}{4} \times (9.5e-3)^2 \times 0.177$$

$$= 2.107 \times 10^{-3}\ m^3$$

Volume of guide thimbles in level 13

CALCULATION WORK SHEET

Subject Level 13 - Cells 1-3 Page 1591
Prepared by Checked by

$$25 \times \frac{\pi}{4} \times (12e-3)^2 \times 0.232 \text{ m}$$

$$= 6.56 \times 10^{-4} \text{ m}^3$$

$$\text{fluid Volume} = 7.285 \times 10^{-3} - 2.107 \times 10^{-3} - 6.56 \times 10^{-4}$$

$$= 4.522 \times 10^{-3} \text{ m}^3$$

$$FRVOL = \frac{4.522 \times 10^{-3}}{7.285 \times 10^{-3}} = 0.6208 \checkmark$$

FRFA-2

total area:

$$\frac{\pi}{4} \times 0.2^2 = 3.14 \times 10^{-2} \text{ m}^2$$

At the upper boundary of Level 13, flow path comprises the 2 mm annular gap and the holes in the perforated upper tie plate, as shown in the Figure on page 157. It is known that the flow area at junction J10 is 3.32×10^{-2} and $HD = 12.40 \times 10^{-3}$ m. We don't know the diameter of the holes of the upper tie plate. either we do not know the distribution of the holes.

CALCULATION WORK SHEET

Subject Level 13 - Cells 1-3 Page 160 1
Prepared by _____ Checked by _____

In determing FRFA-2 for Ring 1, two assumptions are made:

(1) the holes have the same diameter

(2) two thirds of the holes are in ring 1.

Solving for the diameter of the holes, D.

(1) total flow area of the holes

$$3.32 \times 10^{-2} - \frac{\pi}{4} \times (0.312^2 - 0.308^2) = 3.1253 \times 10^{-2}\ m^2$$

(2) Wetted perimeter due to the 2-mm gap and the holes.

$$P_{wetted} = \frac{4A}{HD} = \frac{4 \times 3.32 \times 10^{-2}}{12.40 \times 10^{-3}}\ m$$

$$= 10.71\ m$$

$$P_{wetted\ (holes)} = 10.71\ m - 3.14 \times (0.312 + 0.308)\ m$$

$$= 8.763\ m$$

(3) Diameter of the holes - D

$$3.14 \cdot D \cdot \underbrace{N}_{\text{No. of holes}} = 8.7632\ m$$

$$\frac{3.14}{4} \cdot D^2 \cdot N = 3.1253 \times 10^{-2}\ m^2$$

$$D = \frac{4 \times 3.125 \times 10^{-2}}{8.7632} = 0.014266$$

AdSTM
Advanced Systems Technology and Management, Inc.

CALCULATION WORK SHEET

Subject Level 13 - Coll: 1:3 Page: 1611
Prepared by _____ Checked by _____

$$N = \frac{8.7632}{3.14 \times 0.014266} = 195.63$$

N is an integer. Let N = 195

$$D = \frac{8.7632}{3.14 \times 195} = 0.01431 \text{ m}$$

Accordingly

$$FA\text{-}Z = \frac{2}{3} \times 0.03125 = 2.083 \times 10^{-2} \text{ m}^2$$

$$FRFA\text{-}Z = \frac{2.083 \times 10^{-2}}{3.14 \times 10^{-2}} = 0.6635$$

Total Area of Ring 1

HD-Z

HD-Z = D of the holes = 1.431×10^{-2} m

CALCULATION WORK SHEET

Subject Level 13 - Cells 1-3 Page 1621
Prepared by _____ Checked by _____

CFZ-2

In determing the k-factor for the upper tie plate, the tie plate is treated as a combination of one abrupt contraction and one abrupt expansion.

The k-factor for the abruption is obtained according to Table I-1 of TRAC-M theory manual :

$$\frac{A_{j+1}}{A_j} = FRFA\text{-}2 = 0.6635 \qquad K_1 = 0.14$$

The k factor for the abrupt expansion is obtained according to equation (I-13) of TRAC-M manual.

$$K_2 = \left(1 - \frac{A_j}{A_{j+1}}\right)^2 = \left(1 - FRFA\text{-}2\right)^2 = (1 - 0.6635)^2 = 0.113$$

$$K = K_1 + K_2 = 0.14 + 0.113 = 0.253$$

$$CFZ\text{-}2 = 4.259 \times 10^{-3}$$

CALCULATION WORK SHEET

Subject Level 13 - Cells 1-3 Page 1631
Prepared by _____ Checked by _____

FRFA - R

total area = 3.14 x 0.232 x 0.2 = 0.1457 m^2

intersection area of rods and ther surface at R = 0.1 m :

$(1 - 0.444) \times 0.2 \times 3.14 \times 0.177 = 0.0618\ m^2$

FRFA - R of Level 2

flow area :

$0.1457 - 0.0618 = 0.0839\ m^2$

$$FRFA - R = \frac{0.0839}{0.1457} = 0.5758$$

HD - R

No. of rods intersecting with the Surface at R = 0.1 m is 36 (See Notes for Cell 1 of Level 1)

$P_{wetted} = 36 \times 2 \times 0.177 = 12.744\ m$

$$HD - R = \frac{0.0839 \times 4}{12.744} = 0.02633\ m$$

CFZ - R ≐ 0

AdSTM
Advanced Systems Technology and Management, Inc.

CALCULATION WORK SHEET

Subject Level 13, Cells 1-3 Page 1641
Prepared by _____ Checked by _____

Solving for FRFA-T, HD-T

Cell 1

*FRFA-T total area, FA-T = 0.1 × 0.232 = 2.32×10^{-2} m^2 ✓

flow area,

- flow area corresponding the length of HRs in Level 13,

$$FA\text{-}T = \underbrace{0.579}_{\text{FRFA-T of Cell 1, Level 2}} \times 0.1 \times 0.177 = 1.025 \times 10^{-2}\ m^2$$

- flow area above the heater rods

$$FA\text{-}T = 0.1 \times (0.232 - 0.177)$$

$$= 0.1 \times 0.055$$

$$= 5.5 \times 10^{-3}\ m^2$$

- total flow area

$$FA\text{-}T = 1.025 \times 10^{-2} + 5.5 \times 10^{-3}$$

$$= 1.575 \times 10^{-2}\ m^2$$

AdSTM
Advanced Systems Technology and Management, Inc.

CALCULATION WORK SHEET

Subject Level 13 - Cells 1-3 Page 1651
Prepared by _____ Checked by _____

$$\underline{FRFA-T} = \frac{1.575 \times 10^{-2}}{2.32 \times 10^{-2}} = 0.6789$$

* HD-T

No. of rods intersecting with the surface : 5 (see notes for Cell 1 of Level 2)

$$P_{wetted} = 2 \times 5 \times 0.177 + 0.1 = 1.77 + 0.1 = 1.87\ m$$

$$HD-T = \frac{4A}{P_{wetted}} = \frac{4 \times 1.575 \times 10^{-2}}{1.87} = 0.03369\ m$$

* CFZ-T $\doteq 0$

AdSTM
Advanced Systems Technology and Management, Inc.

CALCULATION WORK SHEET

Subject Level 13 - Cells 1-3 Page 1661
Prepared by _____ Checked by _____

Cell 2

* FRFA-T

total area = $2.32 \times 10^{-2}\ m^2$ (Same as Cell 1, Level 13)

flow area,

- flow area corresponding to the length of HRs in Level 13

$$FA-T = 0.5216 \times 0.1 \times 0.177 = 9.232 \times 10^{-3}\ m^2$$

- flow area above the heater rods

$5.5 \times 10^{-3}\ m^2$ (Same as that of Cell 1 of Level 13)

- total flow area

$$FA-T = 9.232 \times 10^{-3} + 5.5 \times 10^{-3}$$

$$= 1.4732 \times 10^{-32}\ m^2$$

$$FRFA-T = \frac{1.4732 \times 10^{-2}\ m^2}{2.32 \times 10^{-2}\ m^2} = 0.635$$

* HD-T

No. of rods intersecting with the cell surface : 5 (See Notes for Cell 2, Level 2)

AdSTM
Advanced Systems Technology and Management, Inc.

CALCULATION WORK SHEET

Subject Level 13 - Cells 1-3 Page 167

Prepared by _____ Checked by _____

$$P_{wetted} = 5 \times 0.177 \times 2 + 0.1 = 1.87\,m$$

$$HD\text{-}T = \frac{4 \times 1.4732 \times 10^{-2}}{1.87} = 0.0315\,m$$

AdSTM
Advanced Systems Technology and Management, Inc.

CALCULATION WORK SHEET

Subject Level 13 - Cells 1-3 Page 1681
Prepared by _____ Checked by _____

Cell 3

total area $= 2.32 \times 10^{-2}\ m^2$

flow area corresponding to the length of the heater rods:

$0.575 \times 0.177 \times 0.1 = 0.010178\ m^2$

FRFA-T of Cell 3, Level 2

flow area above the heater rods

$5.5 \times 10^{-3}\ m^2$

total flow area

$1.5678 \times 10^{-2}\ m^2$

$$FRFA-T = \frac{1.5678 \times 10^{-2}}{2.32 \times 10^{-2}} = 0.6758$$

No. of rods intersecting with the cell surface: 6 (see Notes for Cell 3 of level 2)

$P_{wetted} = 6 \times 0.177 \times 2 + 0.1 = 2.224\ m$

$$HD\text{-}T = \frac{4A}{P_{wetted}} = \frac{4 \times 1.5678 \times 10^{-2}}{2.224} = 0.02820\ m$$

AdSTM
Advanced Systems Technology and Management, Inc.

CALCULATION WORK SHEET

Subject Level 13 - Cells 4-6 Page 1691
Prepared by _____ Checked by _____

Cell 4

* FRVOL

No. of Rods = 87

No. of guide thimbles = 2

total volume $= \frac{1}{3} \times \frac{\pi}{4} \times (0.312^2 - 0.2^2) \times 0.232$

$= 3.481 \times 10^{-3} m^3$

Volume of heater rods:

$87 \times \frac{\pi}{4} \times (9.5e-3)^2 \times 0.177 = 1.091 \times 10^{-3} m^3$

Volume of thimbles

$2 \times \frac{\pi}{4} \times (12e-3)^2 \times 0.232 = 5.245 \times 10^{-5} m^3$

Volume of fluid: $3.481 \times 10^{-3} - 1.091 \times 10^{-3} - 5.245 \times 10^{-5}$

$= 2.33755 \times 10^{-3} m^3$

$FRVOL = \frac{2.33755 \times 10^{-3}}{3.481 \times 10^{-3}} = 0.6715$

CALCULATION WORK SHEET

Subject Level 13 - Cell 4 Page 1701
Prepared by _____ Checked by _____

FRFA -2

$$\text{total area} = \frac{1}{3} \times \frac{\pi}{4} \times (0.312^2 - 0.2^2) = 1.5 \times 10^{-2}\ m^2$$

$$\text{flow area} = \underbrace{\frac{\pi}{4} \times (0.312^2 - 0.308^2)}_{\text{2 mm - gap}} + \underbrace{\frac{1}{3} \times (\frac{1}{3} \times 0.03125)}_{\text{holes}}$$

$$= 5.419 \times 10^{-3}\ m^2$$

$$FRFA - 2 = \frac{5.419 \times 10^{-3}}{1.5 \times 10^{-2}} = 0.3613$$

HD -2

$$\text{No. of holes} : \frac{1}{3} \times \frac{1}{3} \times 195 = 21.67 \ ; \ \phi = 0.01431\ m$$

$$P_{wetted} = 21.67 \times 3.14 \times 0.01431 + \frac{1}{3} \times 3.14 \times (0.312 + 0.308)$$

$$= 1.623\ m$$

$$HD - 2 = \frac{4 \times 5.419 \times 10^{-3}}{1.623} = 1.336 \times 10^{-2}\ m$$

CALCULATION WORK SHEET

Subject Level 13 - Cell 4 Page 1711
Prepared by _____ Checked by _____

CFZ-Z

The upper tie plate is treated as a Combination of an abrupt contraction and an abrupt expansion when calculating K factor at the upper boundary of Level 13.

For the abrupt contraction,

$$\frac{A_{j+1}}{A_j} = 0.3613, \quad K_1 = 0.38 \quad \text{(Table I-1, Theory Manual)}$$

For the abrupt expansion

$$K_2 = \left(1 - \frac{A_i}{A_{i+1}}\right)^2 = (1 - 0.3613)^2 = 0.408$$

$$K = 0.38 + 0.408 = 0.788$$

$$CFZ\text{-}Z = K_{i+1/2} \cdot H_{i+1/2} (DX_i + DX_{i-1}) \quad \text{- Equation 4-4}$$

TRACZ USER Guide V4160_V6

$$= 1.2386 \times 10^{-2}$$

CALCULATION WORK SHEET

Subject Level 13 - Cell 4 Page 174
Prepared by _____ Checked by _____

FRFA-R 0.0

HD-R 0.0

CFZ-R 0.0

FRFA-T

total area : $0.232 \times (0.312 - 0.2)/2 = 1.299 \times 10^{-2}\ m^2$

flow area corresponding to the length of rods in this cell:

$$(0.177) \times (0.312 - 0.2)/2 \times 0.37 = 3.667 \times 10^{-3}\ m^2$$

FRFA-T of Cell 4, Level 2

flow area above the rods in this ~~level~~ cell

$$(0.232 - 0.177) \times (0.312 - 0.2)/2 = 3.08 \times 10^{-3}\ m^2$$

total flow area

$$1.299 \times 10^{-2} - (3.667 + 3.08) \times 10^{-3}$$

$$= 6.245 \times 10^{-3}\ m^2$$

$$FRFA\text{-}T = \frac{6.245 \times 10^{-3}}{1.299 \times 10^{-2}} = 0.481$$

AdSTM
Advanced Systems Technology and Management, Inc.

CALCULATION WORK SHEET

Subject Level 13 - Cell 4 Page 1731
Prepared by _____ Checked by _____

HD - T

No. of rods intersecting with the surface : 4 (Notes for Cell 4, Level 2)

$$P_{wetted} = 4 \times 0.177 \times 2 + 0.232 + (0.312 - 0.2)/2$$

$$= 1.704 \text{ m}$$

$$HD\text{-}T = \frac{4A}{1.704} = \frac{4 \times 6.245 \times 10^{-3}}{1.704} = 1.466 \times 10^{-2} \text{ m}$$

CALCULATION WORK SHEET

Subject Level 13 - Cell 5 Page 1741
Prepared by _____ Checked by _____

No. of HRs : 88
No. of thimbles : 1

FRVOL

total Volume $= 3.481 \times 10^{-3}\ m^3$ (Same as that for Cell 4)

Volume of heater rods :

$$88 \times \frac{\pi}{4} \times (9.5e-3)^2 \times 0.177 = 1.1035 \times 10^{-3}\ m^3$$

Volume of guide thimble :

$$\frac{\pi}{4} \times (12e-3)^2 \times 0.232 = 2.6225 \times 10^{-5}\ m^3$$

Volume of fluid $= 2.31 \times 10^{-3}\ m^3$

FRVOL $= 0.64$

FRFA-Z 0.3613 (Same as that of Cell 4, Level 13)

HD-Z 1.336×10^{-2} m (Same as that of Cell 4, Level 13)

CFZ-Z $K = 0.788$, $cfz\text{-}z = 1.2386 \times 10^{-2}$

AdSTM
Advanced Systems Technology and Management, Inc.

CALCULATION WORK SHEET

Subject Level 13 - Cell 5 Page 1751
Prepared by _____ Checked by _____

FRFA-R	0.0
HD-R	0.0
CFZ-	0.0

AdSTM
Advanced Systems Technology and Management, Inc.

CALCULATION WORK SHEET

Subject Level 13 - Cell 5 Page 176/

Prepared by _____ Checked by _____

FRFA-T

total area $= 1.299 \times 10^{-2}\ m^2$

flow area corresponding to the length of heater rods.

$(0.177) \times (0.312 - 0.2)/2 \times 0.629 = 6.235 \times 10^{-3}\ m^2$

FRFA-T of Cell 5, Level 13

flow area above the heater rods:

$3.08 \times 10^{-3}\ m^2$ (Same as that of Cell 4)

total flow area

$(3.08 + 6.235) \times 10^{-3} = 9.315 \times 10^{-3}\ m^2$

$$FRFA-T = \frac{9.315 \times 10^{-3}}{1.299 \times 10^{-2}} = 0.717$$

HD-T

No. of HRs intersecting with this surface: 3

$P_{wetted} = 2 \times 3 \times 0.232 + (0.312 - 0.2)/2 + 0.232$

$= 1.64\ m$

$$HD-T = \frac{4A}{P_{wetted}} = \frac{4 \times 9.315 \times 10^{-3}}{1.64\ 64} = 0.02272\ m$$

AdSTM
Advanced Systems Technology and Management, Inc.

CALCULATION WORK SHEET

Subject Level 13 - Cell 6 Page 177/

Prepared by _____ Checked by _____

No. of HRs : 85

No. of guide thimbles : 1

FRVOL

total volume $= 3.481 \times 10^{-3}\ m^3$ (same as that of Cell 4)

volume of heater rods:

$$85 \times \frac{\pi}{4} \times (9.5e-3)^2 \times 0.177 = 1.066 \times 10^{-3}\ m^3$$

vol. of guide thimble :

$$\frac{\pi}{4} \times (12e-3)^2 \times 0.232 = 2.6225 \times 10^{-5}\ m^3$$

volume of fluid :

$$2.3888 \times 10^{-3}\ m^3$$

FRVOL $= 0.686$

FRFA-2 0.3613 (Same as that of Cell 4)

HD-2 1.336×10^{-2} m (Same as that of Cell 4)

CFZ-2 0.788

CALCULATION WORK SHEET

Subject Level 13 - Cell 6 Page 1781
Prepared by _____ Checked by _____

FRFA-T

total area : $1.299 \times 10^{-2}\ m^2$ (Same as that of Cell 4)

flow area corresponding the length of heater rods in this Cell:

$$(0.177) \times (0.312 - 0.2)/2 \times 0.37 = 3.667 \times 10^{-3}\ m^2$$

FRFA-T of Level 12, Cell 4

flow area above the heater rods:

$3.08 \times 10^{-3}\ m^2$ (Same as that of Cell 4)

total flow area,

6.747×10^{-3}

$$FRFA\text{-}T = \frac{6.747 \times 10^{-3}}{1.299 \times 10^{-2}} = 0.5194$$

HD-T

No. of rods intersecting with this surface of Cell 6:

AdSTM
Advanced Systems Technology and Management, Inc.

CALCULATION WORK SHEET

Subject Level 13 - Cell 6 Page 1791
Prepared by _____ Checked by _____

$$P_{wetted} = 3 \times 2 \times 0.232 + 0.232 + (0.312 - 0.2)/2$$

$$= 1.64 \text{ m}$$

$$HD\text{-}T = \frac{4 \times 6.747 \times 10^{-3}}{1.64} = 1.646 \times 10^{-2} \text{ m}$$

AdSTM
Advanced Systems Technology and Management, Inc.

CALCULATION WORK SHEET

Subject Level 13 - Cell 6 Page 1801
Prepared by _____ Checked by _____

FRFA-R	0.0
HD-R	0.0
CFZ-R	0.0

AdSTM
Advanced Systems Technology and Management, Inc.

CALCULATION WORK SHEET

Subject: Level 13 - Cells 7 - 9 Page 181

Prepared by _____ Checked by _____

In Level 13, Cells 7 - 9 are identical.

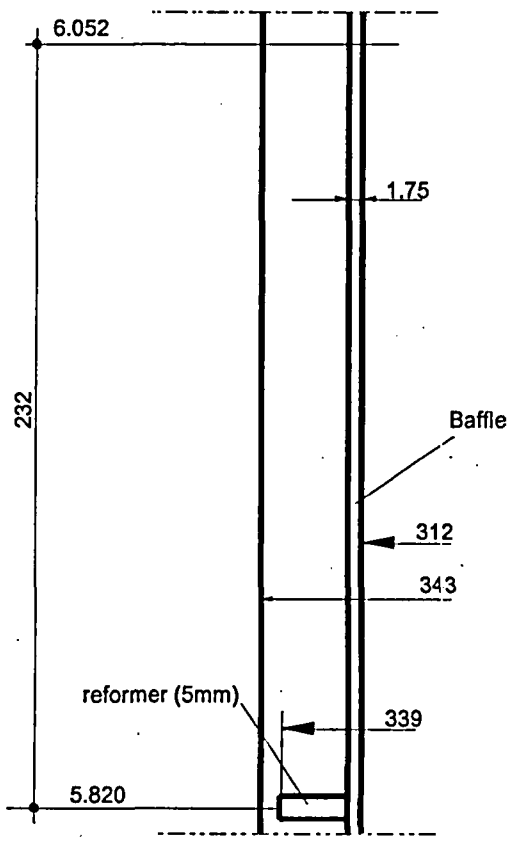

FRVOL

total Volume:

$$0.232 \times \frac{\pi}{4} \times (0.343^2 - 0.312^2)$$

$$= 3.6979 \times 10^{-3}\ m^3$$

Volume of the baffle in Level 13,

$$0.232 \times \frac{\pi}{4} \times (0.3147^2 - 0.312^2)$$

$$= 3.0816 \times 10^{-4}\ m^3$$

by neglecting the volume occupied by the reformer at e/v = 5.820 m

volume of fluid $= 3.3898 \times 10^{-3}\ m^3$

$$FRVOL = \frac{3.3898 \times 10^{-3}}{3.6979 \times 10^{-3}} = 0.91667$$

AdSTM
Advanced Systems Technology and Management, Inc.

CALCULATION WORK SHEET

Subject Level 13 - Cells 7-9 Page 182

Prepared by _____ Checked by _____

FRFA - Z

$$\text{total area} = \frac{\pi}{4}(0.343^2 - 0.31^2) = 1.5939 \times 10^{-2}\ m^2$$

$$\text{flow area} = \frac{\pi}{4}(0.343^2 - 0.3147^2) = 1.4611 \times 10^{-2}\ m^2$$

FRFA - Z = 0.91669

HD - Z

$$(0.343 - 0.3147) = 0.0283\ m$$

CFZ - Z

K = 0.0

FRFA - R

0.0

HD - R 0.0

CFZ - R 0.0

AdSTM
Advanced Systems Technology and Management, Inc.

CALCULATION WORK SHEET

Subject Level 13 - Cells 7-9 Page 1831
Prepared by _____ Checked by _____

FRFA-T

total area :

$$0.232 \times (0.343 - 0.312)/2 \ m^2 = 3.596 \times 10^{-3} m^2$$

by neglecting the reformer at EL = 5.820 m, flow area is

$$0.232 \times (0.343 - 0.3147)/2 = 3.283 \times 10^{-3} m^3$$

FRFA-T = 0.9129

HD-T

$$P_{wetted} = 2 \times 0.232 + (0.399 - 0.3147)/2$$

$$= 0.506 \ m$$

$$HD\text{-}T = \frac{4 \times 3.283 \times 10^{-3}}{0.506} = 0.02595 \ m$$

AdSTM
Advanced Systems Technology and Management, Inc.

CALCULATION WORK SHEET

Subject: _____ Page 1841
Prepared by _____ Checked by _____

TOP CORE Support Section (LEVEL 14)

CALCULATION WORK SHEET

Subject: _____ Page 185

Prepared by _____ Checked by _____

As shown in the figure below, level 14 extends from EL5820 m - EL 6.170m and contains the top core support structure, including the upper core plate, upper tie plate, 12 long guide thimbles and other structures. It is assumed that cells 1 and 2 each contains 5 long thimbles and cell 3 has two long thimbles.

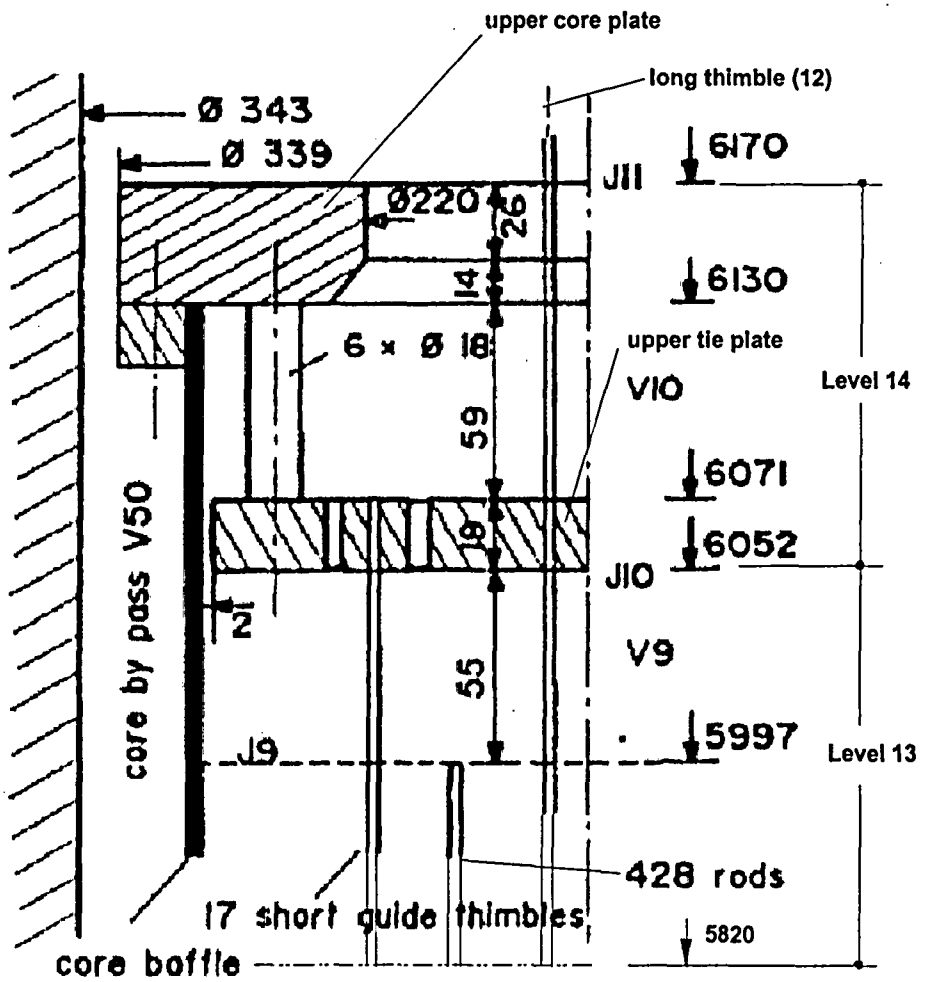

AdSTM
Advanced Systems Technology and Management, Inc.

CALCULATION WORK SHEET

Subject Level 14 - Cells 1 and 2 Page 1861
Prepared by _____ Checked by _____

FRVOL

total Volume

$$\frac{1}{3} \times \frac{\pi}{4} \times 0.2^2 \times 0.118 = 1.2351 \times 10^{-3}\ m^3$$

thimble volume

$$5 \times (0.012)^2 \times \frac{3.14}{4} \times 0.118 = 6.6693 \times 10^{-5}\ m^3$$

Volume of tie plate (the same assumption applied as Cell 1.413.

flow area in the tie plate

$$2.083 \times 10^{-2}\ m^2$$

tie plate volume

$$V = \left(\frac{\pi}{4} \times 0.2^2 - 2.083 \times 10^{-2}\right)(6.170 - 6.130) \times \frac{1}{3}$$

$$= 1.41 \times 10^{-4}\ m^3$$

fluid volume

$$1.2351 \times 10^{-3} - 6.6893 \times 10^{-5} - 1.41 \times 10^{-4}$$

$$= 1.0274 \times 10^{-3}\ m^3$$

$$FVOL = \frac{1.0274 \times 10^{-3}}{1.2351 \times 10^{-3}} = 0.8318$$

AdSTM
Advanced Systems Technology and Management, Inc.

CALCULATION WORK SHEET

Subject Level 14 , Cells 1+2 Page 187

Prepared by _____ Checked by _____

FRFA-Z

$$FA\text{-}Z \text{ total} = \frac{1}{3} \times \frac{\pi}{4} \times 0.2^2 = 0.010467 \ m^2$$

Area occupied by thimbles

$$5 \times \frac{\pi}{4} \times (12e\text{-}3)^2 = 5.652 \times 10^{-4} \ m^2$$

$$FRFA\text{-}Z = \frac{0.010467 - 5.652 \times 10^{-4}}{0.010467} = 0.946$$

HD-Z

$$P_{wetted} = 5 \times (0.012) \times 3.14 = 0.1884 \ m$$

$$HD\text{-}Z = \frac{4 \times 9.9018 \times 10^{-3}}{0.1884} = 0.2102 \ m$$

FRFA-T

Assuming that the flow area in the upper tie plate is a circular hole wit D:

$$\frac{\pi}{4} \times D^2 = 2.083 \times 10^{-2}$$

$$D = 0.1629 \ m$$

$$FA\text{-}T = 0.1 \times 0.118 - \frac{1}{2}\left(0.1 - \frac{0.1629}{2}\right) \times (6.071 - 6.052)$$

$$= 1.162 \times 10^{-2} \ m^2$$

AdSTM
Advanced Systems Technology and Management, Inc.

CALCULATION WORK SHEET

Subject Level 14, Cells 1+2 Page 188 1
Prepared by _____ Checked by _____

$P_{wetted} = 6.071 - 6.052 = 0.019\ m$

$$\underline{HD-T} = \frac{4 \times 1.162 \times 10^{-2}}{0.019} = 2.4463\ m$$

$$\underline{FRFA-T} = \frac{1.162 \times 10^{-2}}{1.18 \times 10^{-2}} = 0.9847$$

However, the calculation will give the warning message attached on the next page if FRFA-T = 0.9847 is used. to remove the warning message,

FRFA-T = FRVOL = 0.8318 is used in the input deck.

AdSTM
Advanced Systems Technology and Management, Inc.

CALCULATION WORK SHEET

Subject _____ Page 189
Prepared by _____ Checked by _____

```
*ivssl* the azmuth flow area 1.16195E-02 m2  of vessel 420 cell (xr= 1,yt= 1,z=14) is
        greater than the cell vol/rdt flow areas 9.81524E-03 m2  and 9.81524E-03 m2  on each side

*ivssl* the azmuth flow area 1.16195E-02 m2  of vessel 420 cell (xr= 1,yt= 2,z=14) is
        greater than the cell vol/rdt flow areas 9.81524E-03 m2  and 1.01952E-02 m2  on each side

*ivssl* the azmuth flow area 1.16195E-02 m2  of vessel 420 cell (xr= 1,yt= 3,z=14) is
        greater than the cell vol/rdt flow areas 1.01952E-02 m2  and 9.81524E-03 m2  on each side
```

AdSTM
Advanced Systems Technology and Management, Inc.

CALCULATION WORK SHEET

Subject Level 14, Cells 1 and 2 Page 1901
Prepared by _____ Checked by _____

FRFA-2

$$FA\text{-}R = \frac{1}{3} \times 3.14 \times 0.2 \times (6.170 - 6.071)$$

$$= 2.20724 \times 10^{-2}\ m^2$$

$$FA\text{-}R_{tot} = \frac{1}{3} \times 3.14 \times 0.2 \times (6.170 - 6.052)$$

$$FRFA\text{-}R = \frac{6.170 - 6.071}{6.170 - 6.052} = 0.8390$$

$$P_{wetted} = \frac{3.14}{3} \times 0.2 = 0.2093\ m$$

$$HD\text{-}R = \frac{4 \times 2.207 \times 10^{-2}}{0.2093} = 0.4218\ m$$

AdSTM
Advanced Systems Technology and Management, Inc.

CALCULATION WORK SHEET

Subject Level 14 - Cell 3 Page 1911
Prepared by _____ Checked by _____

FRVOL

thimble volume :

$$2 \times (0.012)^2 \times \frac{3.14}{4} \times 0.118 = 2.6677 \times 10^{-5} m^3$$

Fluid Volume :

$$\underset{\text{total volume}}{1.2351 \times 10^{-3}} - 2.6677 \times 10^{-5} - \underset{\text{tie plate}}{1.41 \times 10^{-4}}$$

$$= 1.0674 \times 10^{-3} \ m^3$$

FRVOL = 0.864

FRFA - Z

$$FA - Z = \frac{1}{3} \times \frac{\lambda}{4} \times (0.2)^2 - 2 \times \frac{3.14}{4} \times (0.012)^2$$

$$= 1.04667 \times 10^{-2} - 2.2608 \times 10^{-4}$$

$$= 1.024 \times 10^{-2} \ m^2$$

FRFA - Z = 0.978

AdSTM
Advanced Systems Technology and Management, Inc.

CALCULATION WORK SHEET

Subject Level 14 . Cell 3 Page 1921
Prepared by _____ Checked by _____

$P_{wetted} = 2 \times 3.14 \times 0.012 = 0.07536$ m

$HD - Z = \frac{4 \times 1.024 \times 10^{-2}}{0.07536} = 0.5435$ m

FRFA-R, FRFA-T, HD-R, and HD-T of Cell 3 are the same as those of Cells 1+2.

CALCULATION WORK SHEET

Subject Level 14 - Cell 4, 5 and 6 Page 1931
Prepared by _____ Checked by _____

FRVOL

Cells 4, 5 and 6 are identical

Internal structure :

(1) upper tie plate

(2) $\phi 18$ support column

(3) upper core plate

Assumptions :

(1) Cells 4 - 6 each contains 2 of the six $\phi 18$ support column

(2) one third of the holes of the upper tie plate are located in ring 2 ($R_1 = 0.1m$, $R_2 = 0.156m$)

total volume of Cell 4 :

$$\frac{1}{3} \times \frac{\pi}{4} \times (0.312^2 - 0.2^2) \times 0.118 = 1.771 \times 10^{-3} m^3$$

volume occupied by the support columns :

$$2 \times \frac{\pi}{4} \times (18e-3)^2 \times (0.118 - 0.019 - 0.04)$$

$$= 3.0012 \times 10^{-5} m^3$$

AdSTM
Advanced Systems Technology and Management, Inc.

CALCULATION WORK SHEET

Subject Level 14 - Cell 4 Page 1941
Prepared by _____ Checked by _____

Volume occupied by the upper tie plate :

$$\left[\frac{\pi}{4}(0.308^2 - 0.2^2) \times 0.019 - \frac{1}{3} \times 0.03125 \times 0.019\right] \times \frac{1}{3}$$

$$= 2.07 \times 10^{-4}\ m^3$$

Volume occupied by the upper Core plate :

$$\left(\frac{\pi}{4}(0.312^2 - 0.22^2) \times 0.04 - \frac{1}{2} \cdot \frac{\pi}{4} \cdot (-0.22^2 + 0.248^2) \times 0.04\right) \times \frac{1}{3}$$

$$= 1.331 \times 10^{-3}\ m^3 \times 1/3$$

$$= 4.44 \times 10^{-4}\ m^3$$

Fluid Volume :

$$1.771 \times 10^{-3} - 3.001 \times 10^{-5} - 2.07 \times 10^{-4} - 4.44 \times 10^{-4}$$

$$= 1.09 \times 10^{-3}\ m^3$$

$$FRVOL = \frac{1.09 \times 10^{-3}}{1.771 \times 10^{-3}} = 0.6155$$

AdSTM
Advanced Systems Technology and Management, Inc.

CALCULATION WORK SHEET

Subject Level 14 - Cell 4 Page 1951
Prepared by _____ Checked by _____

FRFA-Z

$$\text{total area} = \frac{\pi}{4} \times (0.312^2 - 0.200^2) \times \frac{1}{3} = 1.501 \times 10^{-2}\ m^2$$

$$\text{flow area} = \frac{\pi}{4} \times (0.220^2 - 0.20^2) \times \frac{1}{3} = 2.198 \times 10^{-3}\ m^2$$

$$FRFA\text{-}Z = \frac{(0.220^2 - 0.20^2)}{0.312^2 - 0.2^2} = 0.1464$$

HD-Z

$$P_{wetted} = \frac{1}{3} \times 3.14 \times 0.22 = 0.2303\ m$$

$$HD\text{-}Z = \frac{4 \times 2.198 \times 10^{-3}}{0.2303} = 0.03818\ m$$

AdSTM
Advanced Systems Technology and Management, Inc.

CALCULATION WORK SHEET

Subject Level 14 - Cell 4 Page 1961
Prepared by _____ Checked by _____

FRFA-R 0.0

HD-R 0.0

CFZ-R 0.0

FRFA-T

total area:

$$(0.312-0.2)\times\frac{1}{2}\times 0.118 = 6.608\times10^{-3}\,m^2$$

flow area $\doteq (0.312-0.2)\times\frac{1}{2}\times(0.118-0.019-0.04)+(0.22-0.2)\times$

$$= 3.304\times10^{-3}\,m^2 + 8\times10^{-4}$$

$$= 4.104\times10^{-3}$$

FRFA-T = 0.6211

HD-T

$$P_{wetted} \doteq 0.04 + 0.118 + (0.312-0.22)/2 + (0.312-0.2)/2$$

$$= 0.158 + 0.046 + 0.056$$

$$= 0.260\ m$$

$$HD\text{-}T = \frac{4\times4.104\times10^{-3}}{0.260} = 0.06314\ m$$

AdSTM
Advanced Systems Technology and Management, Inc.

CALCULATION WORK SHEET

Subject: Level 14 - Cells 7-9 Page 1971
Prepared by _____ Checked by _____

Cells 7-9 are identical.

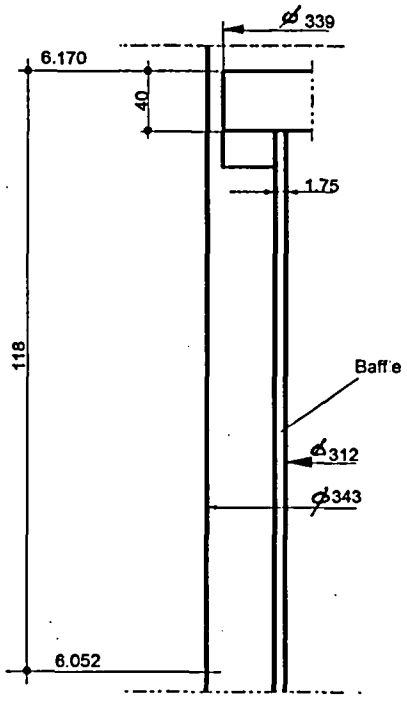

FRVOL

total volume

$$= \frac{\pi}{4} \times (0.343^2 - 0.312^2) \times 0.118$$

$$= 7.523 \times 10^{-3}\ m^3/4 = 1.14 \times 10^{-3}\ m^3$$

Volume of fluid

$$\doteq \frac{\pi}{4} \times (0.343^2 - 0.3147^2) \times (0.118 - 0.04)$$

$$= 1.14 \times 10^{-3}\ m^3$$

$$FRVOL = \frac{1.14 \times 10^{-3}}{1.881 \times 10^{-3}} = 0.606$$

FRFA-2

$$\text{flow area} = \frac{3.14}{4} \times (0.343^2 - 0.339^2) = 2.141 \times 10^{-3}\ m^2$$

$$\text{total area} = \frac{3.14}{4} \times (0.343^2 - 0.312^2) = 0.01594\ m^2$$

$$FRFA-2 = 0.1343$$

AdSTM
Advanced Systems Technology and Management, Inc.

CALCULATION WORK SHEET

Subject Level 14 - Cells 7-9 Page 198 1
Prepared by _____ Checked by _____

HD-Z

$0.343 - 0.339 = 0.004$ m

CFZ-Z

$K = 13.0$, ERZC = 0.104 (using equation 4-4 on page 39)

FRFA- 0.0

HD-R 0.0

CFZ-R 0.0

FAFR-T

total area $= (0.343 - 0.312) \times \frac{1}{2} \times 0.118$

$= 1.67 \times 10^{-3}\ m^2$

flow area $\doteq (0.343 - 0.3147) \times \frac{1}{2} \times (0.118 - 0.04)$

$= 1.104 \times 10^{-3}\ m^2$

FRFA - T $= 0.661$

HD-T

$P_{wetted} \doteq 2 \times 0.118 + (0.339 - 0.3147)/2$

$= 0.24815$ m

$$HD\text{-}T = \frac{1.104 \times 10^{-3} \times 4}{0.24815} = 0.01779\ m$$

AdSTM
Advanced Systems Technology and Management, Inc.

CALCULATION WORK SHEET

Subject: _____ Page 199 1

Prepared by _____ Checked by _____

UPPER PLENUM and UPPER Head - Level 15 - Level 24

(6.170 - 10.421m)

AdSTM
Advanced Systems Technology and Management, Inc.

CALCULATION WORK SHEET

Subject: _____ Page 200/

Prepared by _____ Checked by _____

The figure on the right is a schematic representation of the upper plenum and upper head structure of the BETHSY vessel. In the VESSEL model, it is represented with levels L15-L24. The elevations and lengths of each level is listed below:

Levels	Elevation (m)	Length (m)
15	6.67	0.5
16	7.189	0.519
17	7.307	0.118
18	7.8793	0.5723
19	8.4516	0.5723
20	8.7516	0.3
21	9.063	0.3114
22	9.51625	0.45325
23	9.9695	0.45325
24	10.421	0.4515

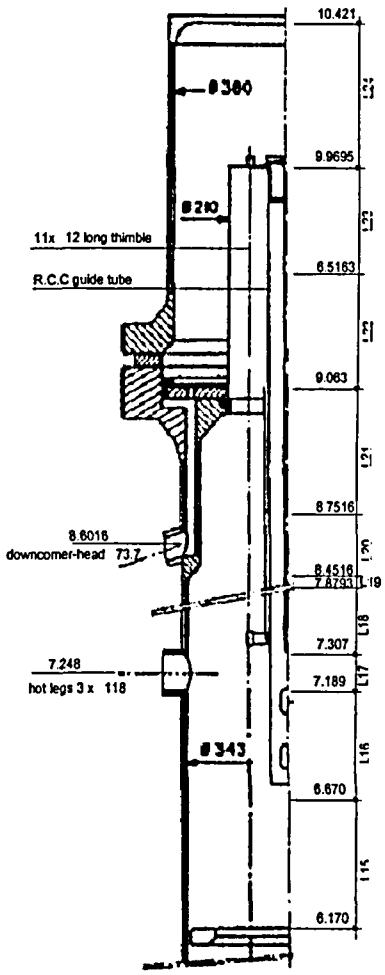

AdSTM
Advanced Systems Technology and Management, Inc.

CALCULATION WORK SHEET

Subject Level 15 - Cell 1 Page 20/1
Prepared by _____ Checked by _____

FRVOL

total Volume :

$$\frac{1}{3} \times \frac{\pi}{4} \times 0.2^2 \times 0.5 = 5.233 \times 10^{-3} m^3$$

thimble volume :

$$\frac{\pi}{4} \times (12e-3)^2 \times 0.5 = 5.652 \times 10^{-5}$$

fluid volume : $5.177 \times 10^{-3} m^3$

FRVOL = 0.9892

FRFA-Z :

total area :

$$\frac{1}{3} \times \frac{\pi}{4} \times 0.2^2 = 1.047 \times 10^{-2} m^2$$

flow area

$$1.047 \times 10^{-2} - \frac{\pi}{4} \times (12e-3)^2 = 1.047 \times 10^{-2} - 1.1304 \times 10^{-4}$$

$$= 1.035 \times 10^{-2} m^2$$

FRFA-Z = 0.9892

AdSTM
Advanced Systems Technology and Management, Inc.

CALCULATION WORK SHEET

Subject Level 15 - Cell 1 Page 2021
Prepared by _____ Checked by _____

HD-Z

$P_{wetted} = 3.14 \times (12e-3) = 0.03768 \ m$

$HD-Z = \frac{4 \times 1.035 \times 10^{-2}}{0.03768} = 1.099 \ m$

FRFA-R

1.0

HD-R

$P_{wetted} = 0.0$

$HD-R = \infty$

FRFA-T

1.0

HD-T

$P_{wetted} = 0.0$

$HD-T = \infty$

AdSTM
Advanced Systems Technology and Management, Inc.

CALCULATION WORK SHEET

Subject Level 15 - Cell 2 Page 2031
Prepared by _____ Checked by _____

FRVOL

In comparison to Cell 1, Cell 2 has 4 more thimbles.

Vol. occupied by fluid / Fluid Vol. in cell 1

$$5.177 \times 10^{-3} - 4 \times \frac{\pi}{4} \times (12e-3)^2 \times 0.5$$

$$= 5.177 \times 10^{-3} - 2.26 \times 10^{-4}$$

$$= 4.951 \times 10^{-3}\ m^3$$

$$FRVOL = \frac{4.951 \times 10^{-3}}{5.233 \times 10^{-3}} = 0.946$$

FRFA-Z

$$FA\text{-}Z = 1.047 \times 10^{-2} - 4 \times \frac{\pi}{4} \times (12e-3)^2$$

$$= 1.047 \times 10^{-2} - 5.65 \times 10^{-4}$$

$$= 9.905 \times 10^{-3}\ m^2$$

$$FRFA\text{-}Z = \frac{9.905 \times 10^{-3}}{1.047 \times 10^{-2}} = 0.946$$

AdSTM
Advanced Systems Technology and Management, Inc.

CALCULATION WORK SHEET

Subject Level 15 - Cell 2 Page 204
Prepared by _____ Checked by _____

HD-Z

$P_{wetted} = 5 \times 3.14 \times (12e-3)$

$= 0.1884\ m$

$HD-Z = \frac{4 \times 9.905 \times 10^{-3}}{0.1884} = 0.2103\ m$

FRFA-L 1.0

HD-R $P_{wetted} = 0.0$

$HD-R = \infty$

FRFA-T 1.0

HD-T ∞

AdSTM
Advanced Systems Technology and Management, Inc.

CALCULATION WORK SHEET

Subject Level 15 - Cell 3. Page 2051
Prepared by _____ Checked by _____

FRVOL

total Volume

$$\text{Fluid Volume} = 5.233 \times 10^{-3} - 6 \times \frac{\pi}{4} \times (12e-3)^2 \times 0.5$$

$$= 4.894 \times 10^{-3}\ m^3$$

$$FRVOL = \frac{4.894 \times 10^{-3}}{5.233 \times 10^{-3}} = 0.9352$$

FRFA-Z

$$FA-Z = 1.047 \times 10^{-2} - 6 \times \frac{\pi}{4} \times (12e-3)^2$$

$$= 9.792 \times 10^{-3}\ m^2$$

$$FRFA-Z = 0.9352$$

HD-Z

$$P_{wetted} = 6 \times 3.14 \times (12e-3)$$

$$= 0.2261\ m$$

$$HD-Z = \frac{4 \times 9.792 \times 10^{-3}}{0.2261} = 0.1732\ m$$

AdSTM
Advanced Systems Technology and Management, Inc.

CALCULATION WORK SHEET

Subject Level 15 - Cell 3 Page 20b 1
Prepared by _____ Checked by _____

FRFA-Z 1.0

HD-R PWRHED = 0

HD - R = 10

FRFA-T 1.0

HD-T 10

AdSTM
Advanced Systems Technology and Management, Inc.

CALCULATION WORK SHEET

Subject Level 15 - Cells 4-6 Page 20 of 1
Prepared by _____ Checked by _____

Cells 4-6 are identical and there is no internal structure inside:

FRVOL = 1.0

FRFA-Z = 1.0

HD - Z = ∞ (10^5 used in the input deck)

FRFA-R = 1.0

HD - R = ∞ (10^5 used in the input deck)

FRFA -T = 1.0

HD - T = ∞ (10^5 used in the input deck)

CALCULATION WORK SHEET

Subject Levels 15 - Cells 7-9 Page 2081
Prepared by _____ Checked by _____

Cells 7-9 are identical and there is no internal structure inside.

FRVOL = 1.0

FRFA-Z = 1.0

FRFA-R = 0.0

FRFA-T = 1.0

HD-R = 0.0

HD-Z

$P_{wetted} = 3.14 \times 0.343 = 1.077\ m$

$FA-Z = \frac{\pi}{4} \times (0.343^2 - 0.312^2) = 1.5934 \times 10^{-2}\ m^2$

$HD-Z = 0.0520\ m$

HD-T

$P_{wetted} = 0.5\ m$

$FA-T = 0.5 \times (0.343 - 0.312)/2 = 7.75 \times 10^{-3}\ m^2$

$HD-T = 0.062\ m$

AdSTM
Advanced Systems Technology and Management, Inc.

CALCULATION WORK SHEET

Subject: _____ Page 201
Prepared by _____ Checked by _____

LEVEL 16

As shown in the figure on page 200, Level 16 extends from EL6.670 - 7.189 m. twelve long thimbles go through this level (1 in cell 1, five in cell 2 and six in cell 3).

AdSTM
Advanced Systems Technology and Management, Inc.

CALCULATION WORK SHEET

Subject Level 16 - Cell 1 Page 210 1
Prepared by _____ Checked by _____

Cell 1 of Level 16 has the same parameters as Cell 1 of Level 17:

FRVOL = 0.9892

FRFA-Z = 0.9892

FRFA-R = 1.0

HD-R = ∞

FRFA-T = 1.0

HD-T = ∞

HD-Z = 1.019 m

CFZ-Z
CFZ-T } = 0.0
CFZ-R

AdSTM
Advanced Systems Technology and Management, Inc.

CALCULATION WORK SHEET

Subject Level 16 - Cell 2 Page 21 1

Prepared by _____ Checked by _____

Cell 2 of Level 16 has the same parameters as Cell 2 of Level 15:

FRVOL = 0.946

FRFA-Z = 0.946

HD-Z = 0.2103

FRFA-T = 1.0

HD-T = ∞

FRFA-R = 1.0

HD-R = ∞

CFZ-Z = 0.0

CFZ-R = 0.0

CFZ-T = 0.0

AdSTM
Advanced Systems Technology and Management, Inc.

CALCULATION WORK SHEET

Subject Level 16 - Cell 3 Page 2121
Prepared by _____ Checked by _____

Cell 3 of Level 16 has the same parameters as Cell 3 of Level 15 :

FRVOL = 0.9352

FRFA-Z = 0.9352

HD-Z = 0.1732

FRFA-R = 1.0

HD-R = ∞

FRFA-T = 1.0

HD-T = ∞

AdSTM
Advanced Systems Technology and Management, Inc.

CALCULATION WORK SHEET

Subject Level 16 - Cells 4 : 9 Page 213 1
Prepared by _____ Checked by _____

Cells 4-6 are identical and they have the same parameters as Cells 4-6 of Level 15.

Cells 7-9 are identical and they have the same parameters as cells 7-9 of Level 15.

Cells 10-15 are void (not used)

CALCULATION WORK SHEET

Subject: _____ Page 214 /
Prepared by _____ Checked by _____

LEVEL 17

As shown in the figure on page 200, Level 17 extends from EL7.189 - 7.307 m. The three hot legs are connected to the vessel in this level.

Before July 1988, three RCC tubes were used to model the RCC guide tubes. After August 1988, one larger tube was used, which was equivalent to the three tubes. In this VESSEL model, the single large RCC tube is split into three individual tubes with each located in Cell 1, Cell 2 and Cell 3 respectively. Sources are provided on the bottom surface on Cells 1 - 3 to connect the three tubes. The dimensions of the RCC tubes (modeled with PIPE component) use the dimensions of the RCC tube before July 1988 (35 ID 38 OD in mm).

The level 17 has the same internal structures as level 16 except that Cells 1-3 each contain a RCC tube (35 ID x 38 OD in mm).

Source Card

Cells 7-9 each provide a source at Surface -2 connecting the three RCC tubes.

*source	level	cell	face	junction
	17	1	-2	445420
	17	2	-2	446420
	17	3	-2	447420

Cells 7-9 each provide a source at Surface 3 connecting the three hot legs.

CALCULATION WORK SHEET

Subject: _____ Page 315

Prepared by _____ Checked by _____

*source	level	cell	face	junction
	17	7	3	100 * Loop 1
	17	8	3	200 * Loop 2
	17	9	3	300 * Loop 3

For the parameters of Cells 4 - 9 of this levels, refer to those of Cells 4-9 of Level 15 or level 16. The parameters are derived for Cells 1 - 3 in the following.

AdSTM
Advanced Systems Technology and Management, Inc.

CALCULATION WORK SHEET

Subject Level 17 - Cells 1-2 Page 2161
Prepared by _____ Checked by _____

Cells 1 and 2 are identical, assing each contains 5 long thimbles.

FRVOL

total Volume =

$$\frac{1}{3} \times \frac{\pi}{4} \times 0.2^2 \times 0.118 = 1.235 \times 10^{-3}\ m^3$$

Volume occupied by one RCC

$$\frac{\pi}{4} \times 0.118 \times 0.038^2 = 1.33757 \times 10^{-4}\ m^3$$

Volume occupied by five thimble tubes:

$$5 \times 0.118 \times \frac{\pi}{4} \times 0.012^2 = 5 \times 1.338 \times 10^{-5}$$

$$= 6.6693 \times 10^{-5}\ m^3$$

fluid volume =

$$= 1.03455 \times 10^{-3}\ m^3$$

FRVOL = 0.8376

AdSTM
Advanced Systems Technology and Management, Inc.

CALCULATION WORK SHEET

Subject Level 17 - Cells 1 and 2 Page 217
Prepared by _____ Checked by _____

FRFA-Z = FRVOL = 0.8376

$FA-Z = 0.8376 \times \frac{\pi}{4} \times 0.2^2 \times \frac{1}{3} = 8.7669 \times 10^{-3}\ m^2$

$P_{wetted} = 5 \times 0.012 \times 3.14 + 3.14 \times 0.038 = 0.3077\ m$

$HD-Z = \frac{4 \times 8.7669 \times 10^{-3}}{0.3077} = 0.114$

FRFA-R = 1.0

HD-R = ∞

FRFA-T

$FA-T = 0.118 \times (0.1 - 0.038) = 7.316 \times 10^{-3}\ m^2$

$FA-T_{total} = 0.118 \times 0.1$

FRFA-T = 0.62

$P_{wetted} = 2 \times 0.118$

$HD-T = \frac{4A}{P_{wetted}} = 0.124$

AdSTM
Advanced Systems Technology and Management, Inc.

CALCULATION WORK SHEET

Subject Level 17 - Cell 3 Page 218 1
Prepared by _____ Checked by _____

FRVOL

Volume by 2 thimble tubes :

$$2 \times 0.118 \times \frac{\pi}{4} \times 0.012^2 = 2.6677 \times 10^{-5} m^3$$

Fluid Volume

$$\underbrace{1.235 \times 10^{-3}}_{\text{total Vol}} - \underbrace{1.33757 \times 10^{-4}}_{1\ RCC} - 2.6677 \times 10^{-5}$$

$$= 1.0746 \times 10^{-3}\ m^2$$

FRVOL = 0.870

FRFA-2

FRFA-2 = FRVOL = 0.870

HD-2

$$FA-2 = 0.870 \times \frac{\pi}{4} \times \frac{1}{3} \times 0.2^2$$

$$= 9.106 \times 10^{-3}\ m^2$$

$$P_{wetted} = 3.14\ (0.038 + 0.012 \times 2) = 0.19468\ m$$

$$HD-2 = \frac{4A}{P_{wetted}} = 0.1871$$

AdSTM
Advanced Systems Technology and Management, Inc.

CALCULATION WORK SHEET

Subject Level 17 - Cell 3 Page 219.1
Prepared by _____ Checked by _____

FRFA-R = 1.0
FRFA-T = 0.62
HD-R = +∞
HD-T = 0.124

Same as those of Cell 1

CALCULATION WORK SHEET

Subject: Levels 18-19 Page 2201
Prepared by _____ Checked by _____

LEVELs 18-19

As shown in the figures on page 200, Level 18 extends from EL7.307 - 7.8793 m and Level 19 extends from EL7.8793 - 8.4516 m. By neglecting the volume occupied by the RCC support structure, the cells in L18 and L19 have the same parameters as the cells in L17:

Cell 1

FRVOL = 0.8367

FRFA-Z = 0.8367

FRFA-T = 0.62

FRFA-R = 0.62

HD-Z = 0.114 m

HD-T = 0.124

HD-R = ∞

Cell 2

FRVOL = 0.8367

FRFA-Z = 0.8367

FRFA-T = 0.62

FRFA-R = 0.62

HD-Z = 0.114 m

HD-T = 0.124

HD-R = ∞

Cell 3

FRVOL = 0.870

FRFA-Z = 0.870

FRFA-T = 0.62

FRFA-R = 0.62

HD-Z = 0.1871 m

CALCULATION WORK SHEET

Subject: Levels 18 - 19 Page 221

Prepared by _____ Checked by _____

HD-T = 0.124

HD-R = ∞

Cells 4 - 6

FRVOL = 1.0

FRFA-Z = 1.0

FRFA-T = 1.0

FRFA-R = 1.0

HD-Z = ∞

HD-T = ∞

HD-R = ∞

Cells 7 - 9

FRVOL = 1.0

FRFA-Z = 1.0

FRFA-T = 1.0

FRFA-R = 0.0

HD-Z = 0.052 m

HD-T = 0.062 m

HD-R = 0.0

CALCULATION WORK SHEET

Subject: _____ Page 224
Prepared by _____ Checked by _____

LEVELs 20-21

As shown in the figure below, Level 20 extends from EL8.4516-8.7516m and Level 21 extends from EL8.7516-9.063 m. These two levels contain the annular volume simulating the downcomer-head bypass (V25). Because Ring 3 (R2 = 312mmn, R4 = 343 mm) cannot accommodate V25, V25 is modeled in Ring 4 with the fluid volume is preserved. A source is provided on Surface 3 of Cell 10 of Level 20 to connect the external pipe linking to the downcomer.

Source card

*source	level	cell	surface	junction
	20	10	3	420400

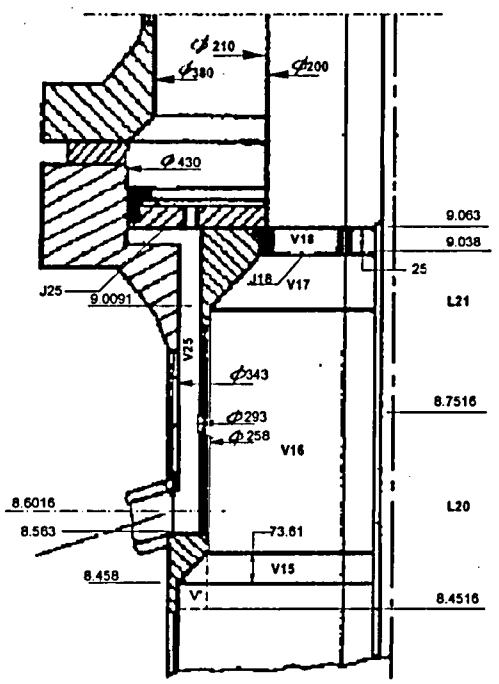

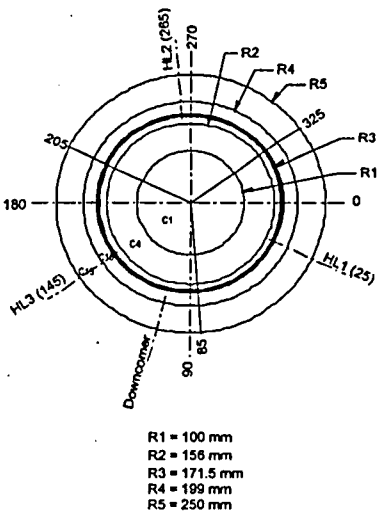

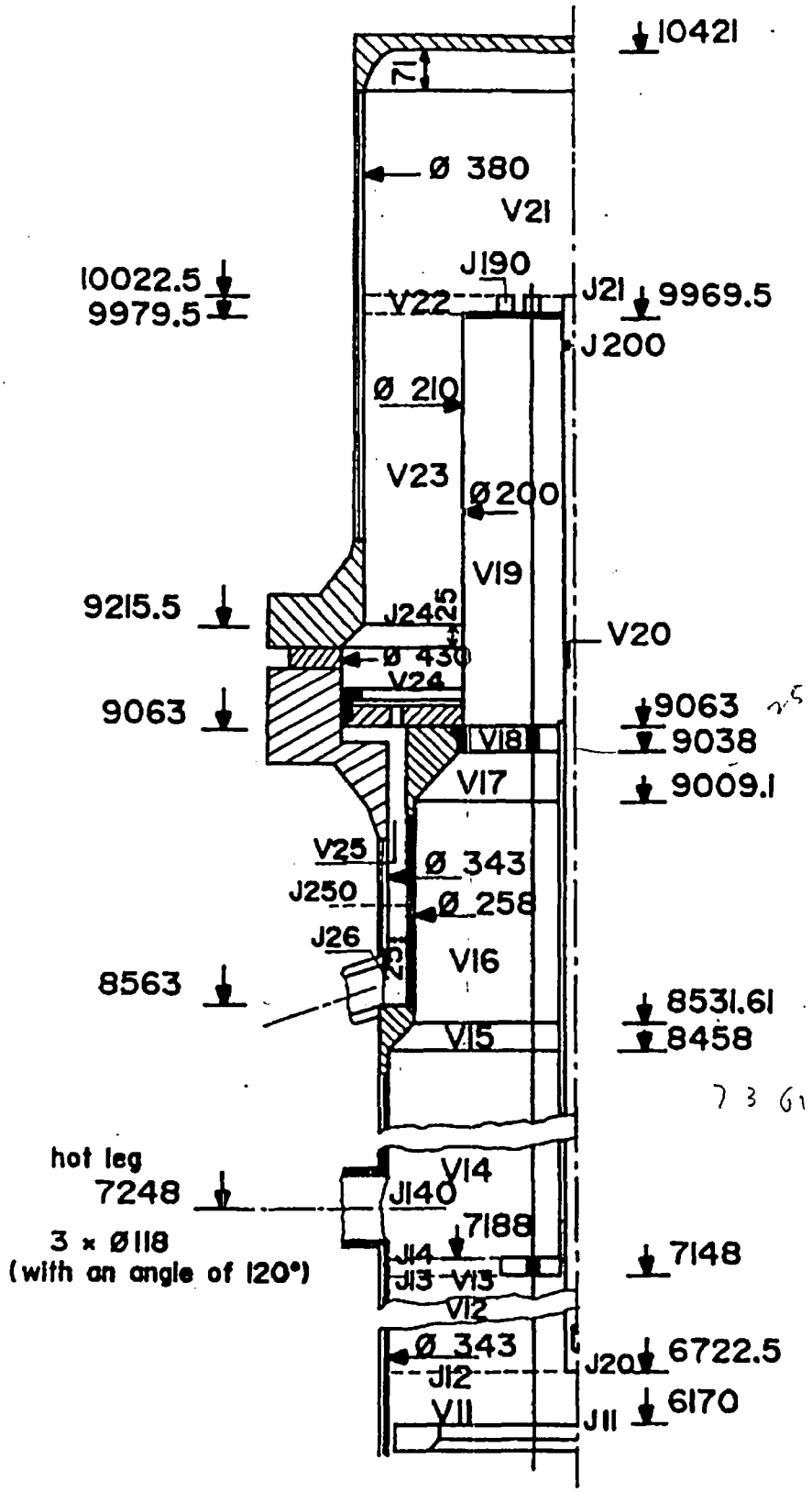

Figure III.2.4 : Upper part of the vessel

AdSTM
Advanced Systems Technology and Management, Inc.

CALCULATION WORK SHEET

Subject Level 20 - Cells 1 + 2 Page 224
Prepared by _____ Checked by _____

Cell 1 and Cell 2 are identical.

FROOL

total volume

$$\frac{1}{3} \times \frac{\pi}{4} \times 0.2^2 \times (8.7516 - 8.4516)$$

$$= 3.14 \times 10^{-3} \ m^3$$

Volume occupied by one R.C.C. (Rod Control Cluster)

$$\frac{\pi}{4} \times (0.038)^2 \times (8.7516 - 8.4516)$$

$$= 3.40 \times 10^{-4} \ m^3$$

Volume occupied by Five thimble tubes:

$$5 \times \frac{\pi}{4} \times (0.012)^2 \times (8.7516 - 8.4516)$$

$$= 1.6956 \times 10^{-4} \ m^3$$

Fluid Volume $= 2.63 \times 10^{-3} \ m^3$

$$FRVol = \frac{2.63 \times 10^{-3}}{3.14 \times 10^{-3}} = 0.8377$$

AdSTM
Advanced Systems Technology and Management, Inc.

CALCULATION WORK SHEET

Subject Level 20 - Cells 1+2 Page 225
Prepared by _____ Checked by _____

FRFA-Z

$$FRFA-Z = FRVOL = 0.8377$$

HD-Z

$$FA-Z = 0.8377 \times \frac{\pi}{3} \times \frac{\pi}{4} \times 0.2^2 = 8.7669 \times 10^{-3} m^2$$

$$P_{wetted} = 5 \times 3.14 \times 12e-3 + 3.14 \times 0.038$$

$$= 0.30772 \ m$$

$$HD-Z = \frac{4 \times 8.7669 \times 10^{-3}}{0.30772} = 0.114 \ m$$

FRFA-T

$$FA-T \ (total) = 0.1 \times (8.7516 - 8.4516) =$$

Assuming one RCC at $\theta = 120°$

$$FA-T \ (RCT) = 0.038 \times (8.7516 - 8.4516) =$$

$$FRFA-T = 0.62$$

HD-T

$$P_{wetted} = 2 \times (8.7516 - 8.4516)$$

$$HD-T = \frac{4 \cdot FA-T}{P_{wetted}} = 0.248$$

AdSTM
Advanced Systems Technology and Management, Inc.

CALCULATION WORK SHEET

Subject Level 20 - Cells 1+2 Page 226
Prepared by _____ Checked by _____

FRFA - R = 1.0

HD - R = ∞

AdSTM
Advanced Systems Technology and Management, Inc.

CALCULATION WORK SHEET

Subject Level 20 - Cell 3 Page 227/
Prepared by _____ Checked by _____

FRVOL

Volume occupied by two thimble tubes:

$$2 \times \frac{\pi}{4} \times (0.012)^2 \times (8.7516 - 8.4516) =$$

Fluid Volume:

$$\underbrace{3.14 \times 10^{-3}}_{\text{total vol}} - \underbrace{3.40 \times 10^{-4}}_{\text{RCC vol.}} =$$

See Note on Cells 1+2

FRVOL = _____ = 0.870

FRFA-Z

FRFA-Z = FRVOL = 0.870

HD-Z

$$FA\text{-}Z = 0.870 \times \frac{1}{3} \times \frac{3.14}{4} \times (0.2)^2 = 9.106 \times 10^{-3}\ m^2$$

$$P_{wetted} = 3.14 \times (0.038 + 2 \times 0.012) = 0.19468\ m$$

$$HD\text{-}Z = \frac{4 \times 9.106 \times 10^{-3}}{0.19468} = 0.1871\ m$$

FRFA-T 0.62 (Same as Cell 1)

AdSTM
Advanced Systems Technology and Management, Inc.

CALCULATION WORK SHEET

Subject Level 20 - Cell 3 Page 2281
Prepared by _____ Checked by _____

HD-T = 0.248 (Same as Cell 1)

FRFA-R = 1.0

HD-R = ∞

AdSTM
Advanced Systems Technology and Management, Inc.

CALCULATION WORK SHEET

Subject Level 20 - Cells 4-6 Page 229/
Prepared by _____ Checked by _____

FRFA-Z

total area

$$\frac{\pi}{4} \times (0.312^2 - 0.2^2) = \cancel{0.06002}\ 0.045015\ m^2$$

flow area

$$\frac{\pi}{4} \times (0.258^2 - 0.2^2) = 0.020853\ m^2$$

FRFA-Z = 0.4632

HD-Z

$$P_{wetted} = 3.14 \times 0.258 = 0.81012\ m$$

$$HD-Z = \frac{4 \times 0.02085}{0.81012} = 0.1030\ m$$

FRFA-R 0.0

HD-R 0.0

AdSTM
Advanced Systems Technology and Management, Inc.

CALCULATION WORK SHEET

Subject Level 20, Cells 4-6 Page 2301
Prepared by _____ Checked by _____

Cells 4-6 are identical.

FRVOL

total volume

$$\frac{\pi}{4} \times (0.312^2 - 0.2^2) \times (8.7516 - 8.4516)$$

$$= 1.351 \times 10^{-2} \, m^3$$

Fluid Volume:

$$\frac{\pi}{4} \times (0.258^2 - 0.2^2) \times (8.7516 - 8.4516)$$

$$+ \frac{\pi}{4} \times (0.312^2 - 0.258^2) \times (8.458 - 8.4516 + 73.61e-3)$$

$$= 8.189 \times 10^{-3} \, m^3$$

FRVOL = 0.606

AdSTM
Advanced Systems Technology and Management, Inc.

CALCULATION WORK SHEET

Subject Level 20 - Cells 4-6 Page 231
Prepared by _____ Checked by _____

FRFA-T

total area

$$\frac{1}{2} \times (0.312 - 0.2) \times (8.7516 - 8.4516)$$

$$= 1.68 \times 10^{-2}\ m^2$$

Flow Area :

$$(0.258 - 0.20) \times \frac{1}{2} \times (8.7516 - 8.4516)$$

$$+ (0.312 - 0.258) \times \frac{1}{2} \times (8.458 - 8.4576 + 73.61e{-3})$$

$$= 1.086 \times 10^{-2}\ m^2$$

FRFA-T = 0.646

HD-T

$$P_{wetted} = 8.7516 - 8.4516 - 73.61e{-3}$$

$$= 0.22639\ m$$

HD-T = 0.1919 m

CALCULATION WORK SHEET

Subject Level 20 - Cells 7-9 Page 234
Prepared by _____ Checked by _____

Considering that

(1) the annular by pass volume is relocated in Ring 4; and

(2) V' is taken into account in Ring 2,

then for Cells 7-9, we have

FRVOL = 0.0

FRFA-Z = 0.0

HD-Z = 0.0 = HD-R = HD-T

FRFA-T = FRFA-R = 0

AdSTM
Advanced Systems Technology and Management, Inc.

CALCULATION WORK SHEET

Subject Level 20 , Cells 10-12 Page 233
Prepared by _____ Checked by _____

Cells 10-12 are identical.

Approximation : Extend the anular space to EL 8.4516 m

FRVOL

total Volume :

$$\frac{\pi}{4} \times (0.398^2 - 0.343^2) \times (8.7516 - 8.4516)$$

$$= 9.60 \times 10^{-3}\ m^3$$

Fluid Volume :

$$\frac{\pi}{4} \times (0.343^2 - 0.293^2) \times (8.7516 - 8.4516)$$

$$= 7.4889 \times 10^{-3}\ m^3$$

FRVOL = 0.7801

FRFAZ

FRFA-Z = 0.7801 = FRVOL

HD-Z

$$FA-Z = \frac{\pi}{4} \times (0.343^2 - 0.293^2) = 0.024963\ m^2$$

$$P_{wetted} = 3.14 \times (0.343 + 0.293) = 1.997\ m$$

HD-Z = 0.05 m

AdSTM
Advanced Systems Technology and Management, Inc.

CALCULATION WORK SHEET

Subject Level 20 - Cells 10-12 Page 234
Prepared by _____ Checked by _____

FRFA-R 0.0

HD-R 0.0

FRFA-T

total area :

$$\frac{1}{2} \times (0.398 - 0.343) \times (8.7516 - 8.4516)$$

$$= 8.25 \times 10^{-3}\ m^2$$

Assuming the outer diameter of the annular fluid is $R_o = 0.398m$, and its inner diameter $R_i = X$, with the fluid volume preserved, we have

$$\frac{\pi}{4} \times (0.398^2 - X^2) \times (8.7516 - 8.4516) = 7.4887 \times 10^{-3}\ m^2$$

$$X = 0.3558$$

$$FRFA\text{-}T = \frac{0.398 - 0.3558}{0.398 - 0.343} = \frac{0.0422}{0.055}$$

$$= 0.7673$$

AdSTM
Advanced Systems Technology and Management, Inc.

CALCULATION WORK SHEET

Subject Level 20 - Cells 10 - 12 Page 23 of 51
Prepared by _____ Checked by _____

HD-T

$$HD\text{-}T = 0.398 - 0.3558 = 0.0422 \text{ m}$$

AdSTM
Advanced Systems Technology and Management, Inc.

CALCULATION WORK SHEET

Subject Level 21 - Cell 1 + 2 Page 236

Prepared by _____ Checked by _____

Cells 1 + 2 are identical.

FRVOL

total volume :

$$\frac{1}{3} \times \frac{3.14}{4} \times 0.2^2 \times (9.063 - 8.7516) = 3.259 \times 10^{-3}\ m^3$$

Volume occupied by one RCC

$$\frac{\pi}{4} \times (0.038)^2 \times (9.063 - 8.7516) = 3.5298 \times 10^{-4}\ m^3$$

Volume occupied by five thimble tubes

$$5 \times \frac{\pi}{4} \times (0.012)^2 \times (9.063 - 8.7516) = 1.760 \times 10^{-4}\ m^3$$

Fluid Volume :

$$2.73 \times 10^{-3}\ m^3$$

FRVOL = 0.8376

FRFA-Z

FRFA-Z = FRVOL = 0.8376

HD-Z

$$FA\text{-}Z = 0.8376 \times \frac{1}{3} \times \frac{\pi}{4} \times 0.2^2 = 8.7669 \times 10^{-3}\ m^2$$

$$P_{wetted} = \frac{1}{3} \times 0.2 \times 3.14 + 3.14 \times 0.038 + 5 \times 3.14 \times 0.012$$

$$= 0.517\ m$$

AdSTM
Advanced Systems Technology and Management, Inc.

CALCULATION WORK SHEET

Subject Level 21 - Cell 1 + 2 Page 23/1
Prepared by _____ Checked by _____

$$HD-2 = \frac{4 \times 8.7669 \times 10^{-3}}{0.517} = 0.06783$$

FRFA-T

$$FA-T\ total = 0.1 \times (9.063 - 8.7516) = 3.114 \times 10^{-2}\ m^2$$

Assuming one RCC at $\theta = 120°$

$$FA-T\ (RCC) = 0.038 \times (9.063 - 8.7516)$$

$$FRFA-T = 0.62$$

HD-T

$$P_{wetted} = 2 \times (9.063 - 8.7516) + 0.025$$

$$= 0.7198\ m$$

$$HD-T = \frac{4 \times (0.1 - 0.038) \times (9.063 - 8.7516)}{0.7198}$$

$$= 0.1073$$

AdSTM
Advanced Systems Technology and Management, Inc.

CALCULATION WORK SHEET

Subject Level 21 - Cell 1 + 2 Page 238
Prepared by _____ Checked by _____

FRFA-R

$$FA-R = \frac{1}{3} \times 3.14 \times 0.2 \times (9.063 - 8.7516 - 0.025)$$

$$FA-R\ (total) = \frac{1}{3} \times 3.14 \times 0.2 \times (9.063 - 8.7516)$$

$$FRFA-R = 0.9197$$

HD-R

$$P_{wetted} = \frac{1}{3} \times 3.14 \times 0.2$$

$$HD-R = 4 \times (9.063 - 8.7516 - 0.025)$$

$$= 1.1456$$

AdSTM
Advanced Systems Technology and Management, Inc.

CALCULATION WORK SHEET

Subject Level 21 - Cell 3 Page 239

Prepared by _____ Checked by _____

FRVOL.

Volume occupied by the two thimble tubes.

$$2 \times \frac{\pi}{4} \times (0.012)^2 \times (9.063 - 8.7516) = 7.04 \times 10^{-5} m^3$$

Fluid Volume

$$3.259 \times 10^{-3} - 3.5298 \times 10^{-4} - 7.04 \times 10^{-5}$$

$$= 2.836 \times 10^{-3} \ m^3$$

FRVOL $= 0.870$

FRFA-2

FRFA-2 = FRVOL $= 0.870$

$$FA-2 = 0.870 \times \frac{1}{3} \times \frac{3.14}{4} \times (0.2)^2 = 9.106 \times 10^{-3} \ m^2$$

$$P_{wetted} = \frac{1}{3} \times 3.14 \times 0.2 + 3.14 \times (0.038 + 2 \times 0.012)$$

$$= 0.404 \ m$$

HD-2

$$HD-2 = 0.09016 \ m$$

AdSTM
Advanced Systems Technology and Management, Inc.

CALCULATION WORK SHEET

Subject Level 21 - Cell 3 Page 2401
Prepared by _____ Checked by _____

FRFA-T = 0.62
HD-T = 0.1073
FRFA-R = 0.9197
HD-R = 1.1456

The same as those

AdSTM
Advanced Systems Technology and Management, Inc.

CALCULATION WORK SHEET

Subject Level 21 - Cells 4-6 Page 241
Prepared by _____ Checked by _____

Cells 4-6 are identical.

FRVOL

total volume

$$\frac{\pi}{4} \times (0.312^2 - 0.20^2) \times (9.063 - 8.7516)$$

$$= 1.4018 \times 10^{-2}\ m^3$$

fluid volume

See Fig. on page 2

$$\frac{\pi}{4} \times (0.258^2 - 0.2^2) \times (9.0091 - 8.7516) + V17$$

$$= 6.745 \times 10^{-3}\ m^3$$

FRVOL = 0.481

FRFA-Z 0.0

HD-Z 0.0

HD-R 0.0

FRFA-R 0.0

AdSTM
Advanced Systems Technology and Management, Inc.

CALCULATION WORK SHEET

Subject Level 21 - Cells 7-9 Page 2421
Prepared by _____ Checked by _____

Refer to the Notes for Cells 7-9 of Level 20,

FRVOL = 0.0
FRFA-Z = FRFA-R = FRFA-T = 0.0
HD-Z = HD-R = HD-T = 0.0

AdSTM
Advanced Systems Technology and Management, Inc.

CALCULATION WORK SHEET

Subject Level 21 - Cells 4-6 Page 2431
Prepared by _____ Checked by _____

FRFA-T

total area:

$$(0.312-0.2)\times\frac{1}{2}\times(9.063-8.7516) = 1.1744\times10^{-2}\,m^2$$

flow area:

$$(0.258-0.2)\times\frac{1}{2}\times(9.0091-8.7516)+(9.038-9.0091)^2/2$$

$$= 7.885\times10^{-3}\,m^2$$

FRFA-T = 0.4522

HD-T

$$P_{wetted} = (9.038-8.7516)+\sqrt{2}\times(9.038-9.0091)-(9.038-9.0091)$$

$$= 0.2984\,m$$

$$HD\text{-}T = \frac{7.885\times10^{-3}\times4}{0.2984} = 0.1057\,m$$

AdSTM
Advanced Systems Technology and Management, Inc.

CALCULATION WORK SHEET

Subject Level 21 - Cells 10-12 Page 244/
Prepared by _____ Checked by _____

Cells 10-12 are identical.

FRVOL

$$\text{total volume} = \frac{3.14}{4} \times (0.398^2 - 0.343^2) \times (9.063 - 8.7516)$$

$$= 9.963 \times 10^{-3}\ m^3$$

Fluid Volume:

$$\frac{3.14}{4} \times (0.430^2 - 0.343^2) \times 0.025 + \frac{3.14}{4} \times (0.343^2 - 0.293^2) \times (9.063 - 8.7516)$$

$$= 9.0932 \times 10^{-3}\ m^3$$

FRVOL = 0.9127

CALCULATION WORK SHEET

Subject Level 21 - Cells 10-12 Page 245
Prepared by _____ Checked by _____

FRFA-Z

Junction 25 at EL 9063 (See figure on page 223) is an orifice containing 8 x ϕ 6.25 mm holes. This orifice can be changed and its maximum value is 8 x ϕ 12.2 mm.

$$\text{total area} = \frac{\pi}{4} \times (0.398^2 - 0.343^2) = 3.199 \times 10^{-2}\ m^2$$

$$\text{Flow Area} = 8 \times \frac{\pi}{4} \times (6.25 \times 10^{-3})^2 = 2.45 \times 10^{-4}\ m^2$$

$$FRFA\text{-}Z = \frac{2.45 \times 10^{-4}}{3.199 \times 10^{-2}} = 7.668 \times 10^{-3}$$

However, using the above FRFA-Z value will leads to a very low bypass flow. In the input deck, FRFA-Z = 0.7803 is used, which is the same as that for level 20.

HD-Z 6.25×10^{-3} m (diameter of orifice holes)

CFZ-Z $K = 1.5$ (Page A7/23, LES/90-97)

fric $= 1.279 \times 10^{-2}$ (using the equation 4-4 on page 39)

AdSTM
Advanced Systems Technology and Management, Inc.

CALCULATION WORK SHEET

Subject Level 21 - Cells 10-12 Page 244 1
Prepared by _____ Checked by _____

FRFA-T

Total Area = $(0.398 - 0.343) \times \frac{1}{2} \times (9.063 - 8.7516)$

$= 8.6635 \times 10^{-3}\ m^2$

Fluid Area

$= (0.430 - 0.398) \times \frac{1}{2} \times 0.025 + (0.343 - 0.293) \times \frac{1}{2}$

$\times (9.063 - 8.7516)$

$= 8.185 \times 10^{-3}$

FRFA-T = 0.9558

AdSTM
Advanced Systems Technology and Management, Inc.

CALCULATION WORK SHEET

Subject Level 21 - Cells 10-12 Page 247/1
Prepared by _____ Checked by _____

HD-T

$$P_{rivetted} = 2 \times (9.063 - 8.7516) + 2 \times (0.43 - 0.398)/2$$

$$= 0.6548 \text{ m}$$

$$HD-T = \frac{8.1585 \times 10^{-3} \times 4}{0.6548} = 0.05 \text{ m}$$

CALCULATION WORK SHEET

Subject: _____ Page 2481
Prepared by _____ Checked by _____

LEVELs 22-24

As shown in the figure below, three levels (L22-24) are used to model the upper head section, extending from EL9.063-10.421 m.

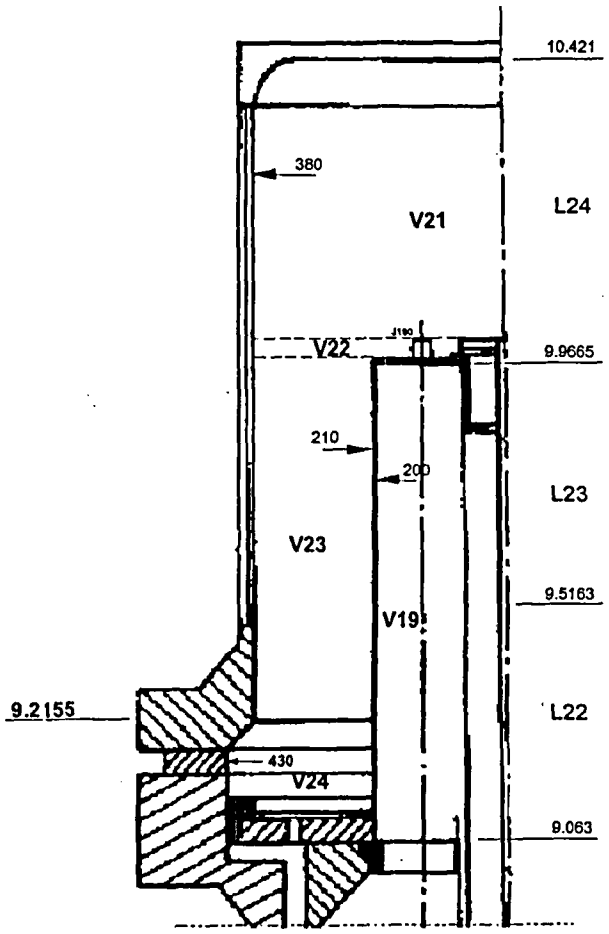

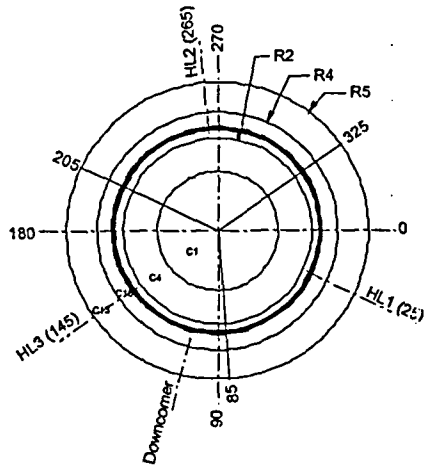

R1 = 100 mm
R2 = 156 mm
R3 = 171.5 mm
R4 = 199 mm

AdSTM
Advanced Systems Technology and Management, Inc.

CALCULATION WORK SHEET

Subject Level 22 Cells 1-3 Page 249

Prepared by _____ Checked by _____

Assuming 3 RCC Tubes are at $\theta = 0, 120°, 240°$

No. of long thimble tubes in each cell:

Cell 1 : 5

Cell 2 : 5

Cell 3 : 2

Volume of each cell:

$$\frac{1}{3} \times \frac{\pi}{4} \times (0.2)^2 \times (9.5163 - 9.063) = 4.7445 \times 10^{-3}\ m^3$$

Volume of 1 RCC tube:

$$\frac{\pi}{4} \times (0.038)^2 \times (9.5163 - 9.063) = 5.1383 \times 10^{-4}\ m^3$$

Volume of 1 thimble tube:

$$\frac{\pi}{4} \times (12e-3)^2 \times 0.4533 = 5.1241 \times 10^{-5}\ m^3$$

AdSTM
Advanced Systems Technology and Management, Inc.

CALCULATION WORK SHEET

Subject Level 22 - Cells 1+2 Page 250/
Prepared by _____ Checked by _____

Cells 1 and 2 are identical.

Fluid Volume:

$$4.7445 \times 10^{-3} - 5.1383 \times 10^{-4} - 5 \times 5.1241 \times 10^{-5}$$

$$= 3.97445 \times 10^{-3}\ m^3$$

FRVOL $= 0.8377 = \dfrac{3.97445 \times 10^{-3}}{4.7445 \times 10^{-4}}$

FRFA-Z = FRVOL = 0.8377

HD-Z

Flow Area $= 0.8377 \times \frac{1}{3} \times (0.2)^2 \times \frac{\pi}{4} = 8.768 \times 10^{-3}\ m^2$

Pwetted $= 3.14 \times [(38e-3) + 5 \times (12e-3)] + \frac{1}{2} \times 3.14 \times 0.2$

$= 0.517\ m$

$$HD-Z = \frac{4 \times 8.768 \times 10^{-3}}{0.517} = 0.06784\ m$$

HZ-R = 0.0

FRFA-R = 0.0

AdSTM
Advanced Systems Technology and Management, Inc.

CALCULATION WORK SHEET

Subject Level 22 - Cells 1+2 Page 251
Prepared by _____ Checked by _____

FRFA-T

$$FA = 0.1 \times (9.5163 - 9.063) = 4.533 \times 10^{-2}\ m^2$$

$$FA\text{-}T = 4.533 \times 10^{-2} - 0.038 \times 0.4533 = 0.028105\ m^2$$

$$FRFA\text{-}T = \frac{2.8105 \times 10^{-2}}{4.533 \times 10^{-2}} = 0.62$$

HD-T

$$P_{wetted} = 0.4533 + 2 \times 0.4533 = 1.3599$$

$$HD\text{-}T = \frac{4 \times 0.028105}{P_{wetted}} = 0.08265\ m$$

AdSTM
Advanced Systems Technology and Management, Inc.

CALCULATION WORK SHEET

Subject Level 22, Cell 3 Page 2521
Prepared by _____ Checked by _____

FRVOL

Fluid Volume:

$$4.7445 \times 10^{-3} - 5.1383 \times 10^{-4} - 2 \times 5.1241 \times 10^{-5}$$

$$= 4.1282 \times 10^{-3}\ m^3$$

$$FRVOL = 0.8701 = \frac{4.1282 \times 10^{-3}}{4.7445 \times 10^{-3}}$$

FRFA-Z

$$FRFA\text{-}Z = FRVOL = 0.8701$$

HD-Z

$$P_{wetted} = \frac{1}{3} \times 0.2 \times 3.14 + 3.14 \times (38e\text{-}3 + 2 \times 12e\text{-}3) = 0.404\ m$$

$$FA\text{-}Z = 0.8701 \times \frac{1}{3} \times (0.2)^2 \times \frac{3.14}{4} = 9.106 \times 10^{-3}\ m^2$$

$$HD\text{-}Z = \frac{4 \times 9.106 \times 10^{-3}}{0.404} = 9.016 \times 10^{-2}\ m$$

AdSTM
Advanced Systems Technology and Management, Inc.

CALCULATION WORK SHEET

Subject Level 22 - Cell 3 Page 253
Prepared by _____ Checked by _____

FRFA-R = 0.0

HD-R = 0.0 m

FRFA-T = 0.62

HD-T = 0.08265 m } the same as for Cell and 2.

AdSTM
Advanced Systems Technology and Management, Inc.

CALCULATION WORK SHEET

Subject Level 22 - Cells 4-6 Page 2541
Prepared by _____ Checked by _____

Cells 4-6 are identical.

FRVOL

total volume :

$$\frac{\pi}{4}(0.312^2 - 0.20^2) \times (9.4516 - 9.063) = 1.7493 \times 10^{-2}$$

fluid volume :

$$\frac{\pi}{4}(0.312^2 - 0.21^2) \times (9.4516 - 9.063) = 0.016242$$

$$FRVOL = \frac{0.016242}{0.017493} = 0.9285$$

FRFA-Z

$$FRFA\text{-}Z = FRVOL = 0.9285$$

$$FA\text{-}Z = FRFA\text{-}Z \cdot \frac{\pi}{4} \times (0.312^2 - 0.20^2) = 0.04180\ m^2$$

HD-Z

$$P_{wetted} = 3.14 \times 0.21 = 0.6594$$

$$HD\text{-}Z = 0.2535\ m$$

AdSTM
Advanced Systems Technology and Management, Inc.

CALCULATION WORK SHEET

Subject Level 22 - Cells 4- 6 Page 251
Prepared by _____ Checked by _____

FRFA -R

1.0

HD -R

FA -R = 3.14 x 0.312 x (9.4516 - 9.063)

= 0.3807

Riveted = 3.14 x 0.312 = 0.9797 m

HD-R = 4x(9.4516 - 9.063) = 1.5544 m

AdSTM
Advanced Systems Technology and Management, Inc.

CALCULATION WORK SHEET

Subject Level 22 - Cells 4-6 Page 2561
Prepared by _____ Checked by _____

FAFR-T

total area :

$$\frac{(0.312-0.2)}{2} \times (9.4516-9.063) = 2.1762 \times 10^{-2}\ m^2$$

flow area :

$$\frac{(0.312-0.21)}{2} \times (9.4516-9.063) = 1.982 \times 10^{-2}$$

FRFA - T = 0.9107

HD-T

$$P_{wetted} = (0.312-0.21)/2 = 0.051\ m$$

$$HD\text{-}T = 4 \times (9.4516 - 9.063) = 1.5544\ m$$

CALCULATION WORK SHEET

Subject Level 22 - Cells 7-9 Page 25 of 1
Prepared by _____ Checked by _____

Cells 7-9 are identical. There is no internal structures inside these cells.

FRVOL

1.0

FRFA-Z

1.0

HD-Z

∞

FRFA-R

1.0

HD-R

FRFA-R = 3.14 x 0.343 x (9.4516 - 9.063)

Pwetted = 3.14 x 0.343

HD-R = 4 x (9.4516 - 9.063)
= 1.5544 m

FRFA-T

1.0

HD-T

FA-T = $\frac{1}{2}$ x (0.343 - 0.312) x (9.4516 - 9.063)

Pwetted = $\frac{1}{2}$ (0.343 - 0.312)

HD-T = 4 x (9.4516 - 9.063) = 1.544

AdSTM
Advanced Systems Technology and Management, Inc.

CALCULATION WORK SHEET

Subject Level 22 - Cells 10-12 Page 2581
Prepared by _____ Checked by _____

FRVOL

total volume :

$$\frac{\pi}{4} \times (0.398^2 - 0.343^2) \times (9.4516 - 9.063) = 0.012432 \ m^3$$

fluid Volume :

$$V24 + V23 \times \frac{9.4516 - 9.2155}{9.9665 - 9.2155} - \frac{3.14}{4} \times (0.343^2 - 0.21^2) \times (9.4516 - 9.063)$$

$$= \underbrace{6.0184 \times 10^{-2} \times \frac{0.2361}{0.751}}_{V23} + 1.602 \times 10^{-2} - 0.02244$$

$$= 0.02501 \ m^3.$$

$$FRVOL = \frac{0.02501}{0.012432} = 1.005491$$

FRVOL > 1 because portion of V24 in ring 5 is taken into account in ring 4.

Since FRVOL is very close to 1.0. In the model, we assume

FRVOL = 1.0

AdSTM
Advanced Systems Technology and Management, Inc.

CALCULATION WORK SHEET

Subject Level 22 - Cells 10 - 12 Page 2591
Prepared by _____ Checked by _____

FRFA-Z

total area : $\frac{\pi}{4} \times (0.398^2 - 0.343^2) = 0.031993\ m^2$

flow area : $\frac{\pi}{4} \times (0.380^2 - 0.343^2) = 0.021\ m^2$

$$FRFA\text{-}Z = \frac{0.021}{0.031993} = 0.656386$$

HD-Z

$$P_{wetted} = 3.14 \times 0.38 = 1.1932\ m$$

$$HD\text{-}Z = \frac{4 \times 0.021}{1.1932} = 0.0704\ m$$

CALCULATION WORK SHEET

Subject Level 22 - Cells 10 - 12 Page 260 1
Prepared by _____ Checked by _____

FRFA - R :

0.0

HD - R

0.0

FRFA - T

In consistency with the assumption that FRVOL = 1.0,

it is assumed that

FRFA - T = 1.0.

$$FA\text{-}T \doteq \frac{1}{2} \times (0.398 - 0.343) \times (9.4516 - 9.063)$$

$$= 1.0687 \times 10^{-2}\ m^2$$

HD - T

$$Pwetted \doteq \frac{1}{2} \times (0.398 - 0.343) + (9.4516 - 9.063)$$

$$= 0.4161\ m$$

$$HD\text{-}T = \frac{4 \times 1.0687 \times 10^{-2}}{0.4161} = 0.10273\ m$$

Cells 13 - 15 are not used (or void).

AdSTM
Advanced Systems Technology and Management, Inc.

CALCULATION WORK SHEET

Subject Level 23 Page 26 | 1
Prepared by _____ Checked by _____

As shown in the figure on page 248, Level 23 extends from EL 9.5163 - 9.9665 m.

Cells 1, 2 and 3 have the same parameters as those for Cells 1, 2 and 3 of Level 22 except for FRFA-Z and HD-Z:

Cells 1+2

FRVOL = 0.8371

FRFA-Z = 0

HD-Z = 0.0

FRFA-T = 0.62

HD-T = 0.08625

FRFA-R = 0.0

HD-R = 0.0

Cell 3

FRVOL = 0.8761

FRFA-Z = 0.0

HD-Z = 0.0

AdSTM
Advanced Systems Technology and Management, Inc.

CALCULATION WORK SHEET

Subject Level 23 - Cells 1, 2, and 3 Page 26/21
Prepared by _____ Checked by _____

FRFA-T = 0.62

HD-T = 0.08265

AdSTM
Advanced Systems Technology and Management, Inc.

CALCULATION WORK SHEET

Subject Level 23 - Cells 4-6 Page 26/31
Prepared by _____ Checked by _____

Cells 4-6 are identical.

FRVOL

0.9285 (Same as that of Cell 4 of Level 22)

FRFA-Z

0.9285

HD-Z

0.2535 m (Same as that of Cell 4 of Level 22)

FRFA-R

1.0

HD-R

+∞

FRFA-T

0.9107 (Same as that of Cell 4 of Level 22)

HD-T

$$FA-T = \frac{1}{2} \times (0.312 - 0.21) \times (9.9665 - 9.5163)$$

$$=$$

$$P_{wetted} = 9.9665 - 9.5163$$

$$HD-T = \frac{4 \times FA-T}{P_{wetted}} = 2 \times (0.312 - 0.21)$$

$$= 0.204 \text{ m}$$

AdSTM
Advanced Systems Technology and Management, Inc.

CALCULATION WORK SHEET

Subject Levels 23- Cells 7-9 Page 2641
Prepared by _____ Checked by _____

Cells 7-9 are identical.

FRVOL	1.0
FRFA-Z	1.0
HD-Z	∞
FRFA-R	1.0
HD-R	∞
HD-T	∞
FRFA-T	1.0

AdSTM
Advanced Systems Technology and Management, Inc.

CALCULATION WORK SHEET

Subject Level 23 - Cells 10 - 12 Page 2051
Prepared by _____ Checked by _____

Cells 10 - 12 are identical.

FRVOL

total volume :

$$\frac{\pi}{4} \times (0.398^2 - 0.343^2) \times (9.9665 - 9.5163)$$

$$= \cancel{1.647} \times 10^{-2}\ m^3$$
$$1.441$$

Volume of fluid :

$$\frac{\pi}{4} \times (0.380^2 - 0.343^2) \times (9.9665 - 9.5163)$$

$$= \cancel{1.081} \times 10^{-2}\ m^3$$
$$0.945$$

FRVOL = $\cancel{0.6564}$ 0.6558 (error ~ 0.1 % doesn't impact the result – but input changed for future calculations) MS 9/27/06

FRFA - 2

total area :

$$\frac{3.14}{4} \times (0.398^2 - 0.343^2) = 3.1993 \times 10^{-2}\ m^2$$

flow area :

$$\frac{3.14}{4} \times (0.380^2 - 0.343^2) = 0.021\ m^2$$

FRFA - 2 = 0.6564

AdSTM
Advanced Systems Technology and Management, Inc.

CALCULATION WORK SHEET

Subject Level 23 - Cells 10-12 Page 266 1
Prepared by _____ Checked by _____

HD-2

$P_{wetted} = 3.14 \times 0.38 = 1.1932\ m$

$HD-2 = 4 \times 0.021 / 1.192 = 0.0704\ m$

FFFA-R

0.0

HD-R

0.0

FFFA-T

total area : $\frac{1}{2} \times (0.398 - 0.343) \times (9.9665 - 9.5163)$

$= \cancel{1.416 \times 10^{-2}}\ m^2$
1.238×10^{-2}

Flow area $= \frac{1}{2} (0.380 - 0.343) \times (9.9665 - 9.5163)$

$= \cancel{9.526 \times 10^{-3}}\ m^2$
8.329×10^{-3}

FFFA-T $= 0.6727$ ✓ MS 3/27/06

HD-T

$P_{wetted} = 9.9665 - \cancel{9.9516}\ 9.5163 = \cancel{0.5149}\ 0.4502\ m$

$HD-T = \frac{0.008526 \times 4}{\cancel{0.5149}\ 0.4502} = \cancel{0.074}\ 0.085\ m$ (error in early varied cells will not impact the result - but input required for future calculations)

MS 3/27/06

AdSTM
Advanced Systems Technology and Management, Inc.

CALCULATION WORK SHEET

Subject Level 23 - Cells 10 - 12 Page 2651
Prepared by _____ Checked by _____

Cells 10 - 12 are identical.

FRVOL

total volume :

$$\frac{\pi}{4} \times (0.398^2 - 0.343^2) \times \overbrace{(9.9665 - 9.5163)}^{0.4502}$$

$$= 1.647 \times 10^{-2}\ m^3$$

This should be $\times \frac{0.4502}{0.5149}$

$$= 1.44 \times 10^{-2}\ m^3$$

Volume of fluid :

$$\frac{\pi}{4} \times (0.380^2 - 0.343^2) \times (9.9665 - 9.5163)$$

$$= 1.081 \times 10^{-2}\ m^3$$

$$0.945 \times 10^{-2}\ m^3$$

FRVOL = 0.6564

FRFA-Z

total area :

$$\frac{3.14}{4} \times (0.398^2 - 0.343^2) = 3.1993 \times 10^{-2}\ m^2$$

flow area :

$$\frac{3.14}{4} \times (0.380^2 - 0.343^2) = 0.021\ m^2$$

FRFA-Z = 0.6564

AdSTM
Advanced Systems Technology and Management, Inc.

CALCULATION WORK SHEET

Subject Level 23 - Cells 10-12 Page 266 1
Prepared by _____ Checked by _____

HD-Z

$P_{wetted} = 3.14 \times 0.38 = 1.1932\ m$

$HD-Z = 4 \times 0.021 / 1.192 = 0.0704\ m$

FRFA-R

0.0

HD-R

0.0

FRFA-T

total area : $\frac{1}{2} \times (0.398 - 0.343) \times (9.9665 - 9.5163)$

$= 1.416 \times 10^{-2}\ m^2$ $\times 0.8743$

Flow area $= \frac{1}{2}(0.380 - 0.343) \times (9.9665 - 9.5163)$

$= 8.526 \times 10^{-3}\ m^2$ $\times 0.8743$

FRFA-T $= 0.6727$

HD-T

$P_{wetted} = 9.9665 - 9.4516 = 0.5149\ m$

$HD-T = \frac{0.008526 \times 4}{0.5149} = 0.074\ m$

AdSTM
Advanced Systems Technology and Management, Inc.

CALCULATION WORK SHEET

Subject Level 24 Page 267
Prepared by _____ Checked by _____

As shown in the figure on page 248, Level 24 is the top of the vessel and extends from EL 9.9665 to EL 10.421 m. The bottom of Level 24 (Cells 1, 2, 3) provides three internal connections for the RCC tubes.

Source Card.

*	Level	Cell	face	Junction
	24	1	-2	420445
	24	1	-2	420446
	24	1	-2	420447

AdSTM
Advanced Systems Technology and Management, Inc.

CALCULATION WORK SHEET

Subject Level 24 - Cells 1-3 Page 2681
Prepared by _____ Checked by _____

Cells 1-3 are identical. There is no internal structure in these Cells

FRVOL

1.0

FRFA-Z

0.0

HD-Z 0.0

FRFA-R

1.0

HD-R

$P_{wetted} = 3.14 \times 0.2 \times 2 = 1.256\ m$

$FA-R = 3.14 \times 0.2 \times (10.421 - 9.9665) = 0.2854\ m^2$

$HD-R = 0.909\ m$

FRFA-T

1.0

HD-T

$FA-T = \frac{1}{2} \times 0.2 \times (10.421 - 9.9665)$

$= 0.04545\ m^2$

$P_{wetted} = \frac{1}{2} \times 0.2 = 0.1\ m$

$HD-T = 1.818\ m$

AdSTM
Advanced Systems Technology and Management, Inc.

CALCULATION WORK SHEET

Subject Level 24 - Cells 4-6 Page 2691
Prepared by _____ Checked by _____

Cells 4-6 are identical and there is no internal structure inside
f

FRVOL

1.0

FRFA-Z

0.0

HD-Z 0.0

FRFA-T 1.0

HD-T

$FA\text{-}T = \frac{1}{2} \times (0.312 - 0.2) \times (10.421 - 9.9665)$

$= 2.545 \times 10^{-2}\ m^2$

$P_{wetted} = \frac{1}{2} \times (0.312 - 0.2) = 0.056\ m$

$HD\text{-}T = 1.818\ m$

FRFA-R

1.0

HD-R

$FA\text{-}R = 0.312 \times 3.14 \times (90.421 - 9.9665)$

$= 0.4453\ m$

$P_{wetted} = 3.14 \times 0.312 = 0.9797\ m$

$HD\text{-}R = 4 \times (10.421 - 9.9665) = 1.818\ m$

AdSTM
Advanced Systems Technology and Management, Inc.

CALCULATION WORK SHEET

Subject Level 24 - Cells 7-9 Page 2701
Prepared by _____ Checked by _____

Cells 7-9 are identical.

FRVol

1.0

FRFA-Z

0.0

HD-Z 0.0

FRFA-R

1.0

HD-R

FA-R = 3.14 × 0.343 × (10.421 - 9.9665)

Pwetted = 3.14 × 0.343

HD-R = 4 × (10.421 - 9.9665)

= 1.818 m

FRFA-T

1.0

HD-T

FA-T = $\frac{1}{2}$ × (0.343 - 0.312) × (10.421 - 9.9665)

Pwetted = $\frac{1}{2}$ (0.343 - 0.312)

HD-T = 4 × (10.421 - 9.9665) = 1.818 m

AdSTM
Advanced Systems Technology and Management, Inc.

CALCULATION WORK SHEET

Subject Level 24 - Cells 10 - 12 Page 27/1
Prepared by _____ Checked by _____

Cells 10 - 12 are identical.

FRVOL

$\doteq 0.6564$ (Same as that of Cell 10 of Level 23)

FRFA-Z

0.0

HD-Z

0.0

FRFA-R

0.0

HD-R

0.0

FRFA-T

0.6727 (Same as that of Cell 10 of Level 23)

HD-T

$$FA-T = \frac{1}{2} \times (0.380 - 0.343) \times (10.421 - 9.966)$$

$$= 8.408 \times 10^{-3} m^2$$

$$P_{wetted} = \frac{1}{2}(0.380 - 0.343) + (10.421 - 9.966) = 0.473 m$$

$$HD-T = 0.0711 m$$

CALCULATION WORK SHEET

Subject: _____ Page 27.2 1
Prepared by _____ Checked by _____

RCC Guide Tubes

As discussed in the notes related to Level 17 and L24, three identical PIPE components are used to represent the one large RCC tube at the vessel centerline. The PIPE components are connected to the upper boundary of L16 and L23, providing a flow path between the upper plenum and upper head. The PIPE components are based on the RCC tube geometry in the 3-RCC configuration before 1988.

The PIPE component contains two cells. Some main parameters for the PIPE component are listed below:

No. of cells: 2

dx: $(4.9665 - 7.189)/2 = 1.38875\ m$ (Fig 1, Page 28)

volume: $V_1 = V_2 = \frac{\pi}{4} \times (35e-3)^2 \times 1.38875 = 1.335 \times 10^{-3}\ m^3$

fa: $fa_1 = \frac{\pi}{4} \times (35e-3)^2 = 9.62 \times 10^{-4}\ m^2 = fa_3$

$fa_2 = \frac{1}{3} \times 1.283 \times 10^{-3} = 4.1267 \times 10^{-4}\ m^2$

FA (J200) - P21/LZS/87-28

Assuming the orifice inside the tube at the middle plane of the tube

AdSTM
Advanced Systems Technology and Management, Inc.

CALCULATION WORK SHEET

Subject: _____ Page 2731
Prepared by _____ Checked by _____

hd 0.035 0.02339 0.035

fric 0.0

K = 24.67 fric = K · 0.2339 / 2 / 1.38875 = 2.0211

0.0

AdSTM
Advanced Systems Technology and Management, Inc.

CALCULATION WORK SHEET

Subject _____ Page 274

Prepared by _____ Checked by _____

HEATER Rods

CALCULATION WORK SHEET

Subject _____ Page 27(7)
Prepared by _____ Checked by _____

The BETHSY core is composed of 428 full-length indirectly heated rods of an OD of 9.5mm. It is powered by a 3 MW power supply, i.e. a little more than 10% of the nominal power on the BETHSY scale.

The heater rods consist of three wires spirally wound to a variable pitch so as to get a step-wise cosine axial power distribution with an axial peaking factor of 1.6. The insulation material is boron nitride. And 0.6 mm thick cladding material is made of a low carbon stainless steel. The power distribution in the core is uniform in the radial direction.

In determining the number of heater rods in each relative cell, at a boundary of the cell, a rod is counted for the cell only if > 50% of its cross area is in the cell. Thus, it is assumed:

Cell 1 - 56 heater rods;
Cell 2 - 56 heater rods;
Cell 3 - 56 heater rods;
Cell 4 - 87 heater rods;
Cell 5 - 88 heater rods; and
Cell 6 - 85 heater rods.

Six powered HTSTRs are used to represent the heater rods, with each coupled with a relative cell. The axial nodalization and nodalization for a single rod are shown in the figure on next page.

As the shown in the figure, 8 axial nodes are coupled with 9 levels (L6 - L13, core region). A heater rod is modeled with two regions: BN and cladding (316SS). It is assumed that the heat is generated in the BN region uniformly.

AdSTM
Advanced Systems Technology and Management, Inc.

CALCULATION WORK SHEET

Subject _____ Page 276 1
Prepared by _____ Checked by _____

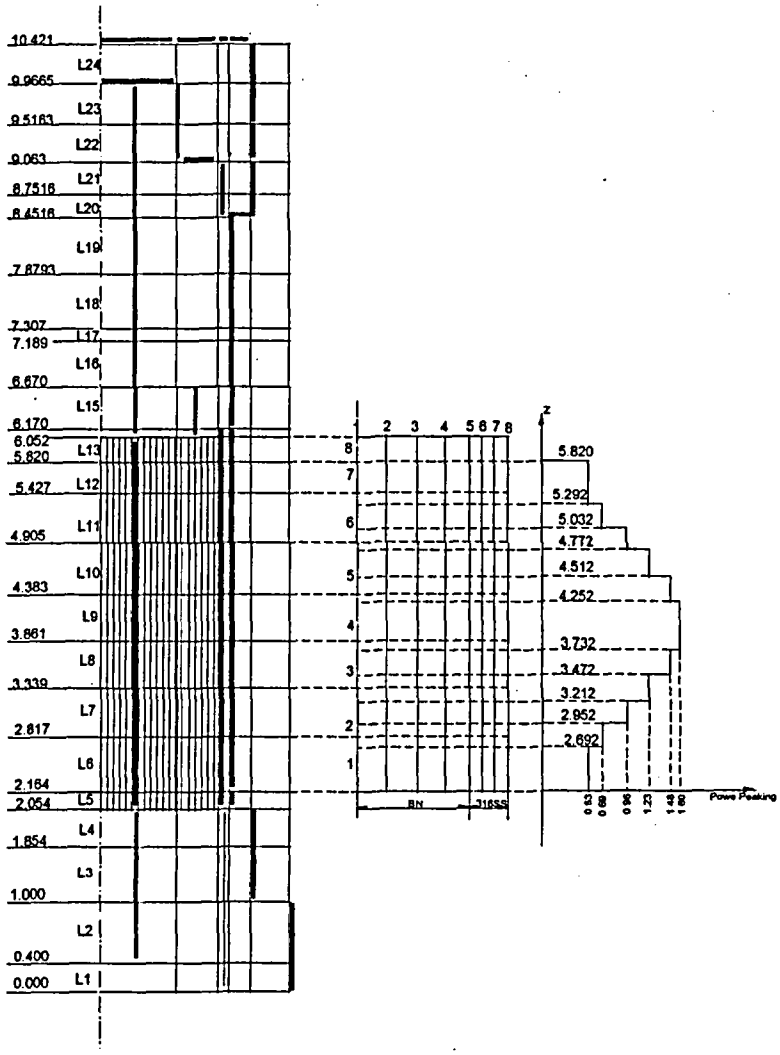

CALCULATION WORK SHEET

Subject _____ Page 277/
Prepared by _____ Checked by _____

Heater Rod Axial Nodalization

ELEVATION (M)	NODES	VESSEL LEVEL	DHSTRZ (M)	DETAZ (M)	PEAKING	NODE PEAKING
2.164						
2.817	1	6	0.653	0.528	0.53	0.561
				0.125	0.69	
3.339	2	7	0.522	0.135	0.69	0.956
				0.26	0.96	
				0.127	1.23	
3.861	3	8	0.522	0.133	1.23	1.446
				0.26	1.48	
				0.129	1.6	
4.383	4	9	0.522	0.391	1.6	1.570
				0.131	1.48	
4.905	5	10	0.522	0.129	1.48	1.223
				0.26	1.23	
				0.133	0.96	
5.427	6	11	0.522	0.127	0.96	0.714
				0.26	0.69	
				0.135	0.53	
5.82	7	12	0.393	0.393	0.53	0.530
6.052	8	13	0.232	0.232	0	0.000

Radial Nodalization of a Heater Rod

R1 = 0.0
R2 = 1.0375×10^{-3}
R3 = 2.075×10^{-3}
R4 = 3.1125×10^{-3}
R5 = 4.15×10^{-3}
R6 = 4.35×10^{-3}
R7 = 4.55×10^{-3}
R8 = 4.75×10^{-3}

AdSTM
Advanced Systems Technology and Management, Inc.

CALCULATION WORK SHEET

Subject _____ Page 278/
Prepared by _____ Checked by _____

POWER Component

Axial power distribution:

ZPWZT and ZPWTB1 are based on the HTSTR 925 nodalization and axial power distribution given on Page 40/85 - NOTE SETh/LES/87-28.

ELEVATION (M)	NODES	VESSEL LEVEL	DHSTRZ (M)	NODE PEAKING	ZPWZT
2.164					
2.817	1	6	0.653	0.561	0.763
3.339	2	7	0.522	0.956	1.285
3.861	3	8	0.522	1.446	1.807
4.383	4	9	0.522	1.570	2.329
4.905	5	10	0.522	1.223	2.851
5.427	6	11	0.522	0.714	3.373
5.820	7	12	0.393	0.530	3.766
6.052	8	13	0.232	0.000	3.998

Power decay curve

W+02 (kW)	TIME (s)	W+02 (kW)	TIME (s)
2864 ±30	SCRAM SIGNAL	964	123.
2864	17.0	906	153.
2720	17.6	854	198.
2578	19.0	812	273.
2434	21.5	750	373.
2290	24.0	726	423.
2148	26.8	706	523.
2005	29.7	680	623.
1862	32.6	662	723.
1750	36.0	647	823.
1550	44.0	629	923.
1385	52.0	510	1923.
1265	63.0	439	3123.
1170	74.0	380	5123.
1110	84.0	340	7123.
1050	94.0	324	9123.
990	104.0	271	18123.

(Source: page 11/149 - ISP27 Final Report)

CALCULATION WORK SHEET

Subject _____ Page 279/

Prepared by _____ Checked by _____

List of POWER component input cards

```
*******   type          num        userid              component name
power                   999             1            Power decay curve.
*       numpwr       chanpow
            6             0
* htnum *   950   951   952  s
* htnum *   953   954   955  e
*       irpwty         ndgx          ndhx          nrts         nhist
            7            0             0            10             0
*       irpwtr       irpwsv        nrpwtb        nrpwsv        nrpwrf
         -440            1           -34             0             0
*       izpwtr       izpwsv        nzpwtb        nzpwsv        nzpwrf
            0            1             1             0             0
*       ipwrad       ipwdep      promheat      decaheat      wtbypass
            0            0           0.0           0.0           0.0
*        nzpwz        nzpwi        nfbpwt         nrpwr         nrpwi
            8           -1             0             1             0
*        react        tneut        rpwoff        rrpwmx        rpwscl
          0.0          0.0           0.0   1.000000E20           1.0
*       rpowri        zpwin        zpwoff        rzpwmx
    2.864000E6          0.0           0.0   1.000000E20
*       extsou         pldr         pdrat        fucrac
          0.0          0.0           0.0           0.0
* rdpwr *         0.0    1.746746    1.746746    1.746746         0.0s
* rdpwr *         0.0         0.0         0.0e
* cpowr *    f    1.0e
* zpwzt *       0.000       0.653       1.175       1.697 s
* zpwzt *       2.219       2.741       3.263       3.656 e
* zpwtb1*       0.00        0.561       0.956       1.446        1.570 s
* zpwtb1*       1.223       0.714       0.530       0.00 e
* rpwtbr*         0.0  2.864000E6        17.0  2.864000E6        17.6s
* rpwtbr*  2.720000E6        19.0  2.578000E6        21.5  2.434000E6s
* rpwtbr*        24.0  2.290000E6        26.8  2.148000E6        29.7s
* rpwtbr*  2.005000E6        32.6  1.862000E6        36.0  1.750000E6s
* rpwtbr*        44.0  1.550000E6        52.0  1.385000E6        63.0s
* rpwtbr*  1.265000E6        74.0  1.170000E6        84.0  1.110000E6s
* rpwtbr*        94.0  1.050000E6       104.0  9.900000E5       123.0s
* rpwtbr*  9.640000E5       153.0  9.060000E5       198.0  8.540000E5s
* rpwtbr*       273.0  8.120000E5       373.0  7.500000E5       423.0s
* rpwtbr*  7.260000E5       523.0  7.060000E5       623.0  6.800000E5s
* rpwtbr*       723.0  6.620000E5       823.0  6.470000E5       923.0s
* rpwtbr*  6.290000E5      1923.0  5.100000E5      3123.0  4.390000E5s
* rpwtbr*      5123.0  3.800000E5      7123.0  3.400000E5      9123.0s
* rpwtbr*  3.240000E5  1.812300E4  2.710000E5e
  *
```

CALCULATION WORK SHEET

Subject _____ Page 280/
Prepared by _____ Checked by _____

Core Baffle - HTSTR 928, 956 and 957

Three non-powered HTSTRs (SLABs) are used to represent the core baffle. Each coupled with a relative cell in ring 2 and ring 3 for EL 2054 - 6.170 m (L5-L14). The coupled cell pairs by the HTSTRs are: 4&7, 5&8 and 6&9.

Axial nodaization: axial nodes correspond to their coupling levels as follows

ELEVATION (M)	NODES	DHTSTRZ (M)	LEVEL	dhtstrz
2.054				
2.164	1	0.11	5	0.11
2.817	2	0.653	6	0.653
3.339	3	0.522	7	0.522
3.861	4	0.522	8	0.522
4.383	5	0.522	9	0.522
4.905	6	0.522	10	0.522
5.427	7	0.522	11	0.522
5.82	8	0.393	12	0.393
6.052	9	0.232	13	0.232
6.17	10	0.118	14	0.118

Heat transfer length:

total area of the baffle: 9.858m^2, EL2164-5280 (p.30/85-/LES/87-28)
volume: 6.186e-3m^3, EL2164-5280 (p.30/85-/LES/87-28)
thickness: 1.255e-3m^3

width: $\frac{9.885}{2}\frac{1}{3}\frac{1}{5.280-2.164}=0.530m$

List of HTSTR 928 cards

```
*******   type          num        userid              component name
htstr                   928            0          Core Baffle - Cells4&7
*       nzhstr         ittc         hscyl          ichf
           10            0             0             1
*       nopowr        plane        liqlev        iaxcnd
            1            1             0             0
*        nmwrx         nfci         nfcil          hdri          hdro
            0            0             0        0.0113       0.01435
*   width
         0.53
*         nhot        nodes         irftr         nzmax        irftr2
            0            4             0            48             0
*     dtxht(1)     dtxht(2)         dznht         hgapo
          1.0         10.0   1.000000E-3           0.0
```

CALCULATION WORK SHEET

Subject _____ Page 28/1
Prepared by _____ Checked by _____

```
*
*  idbcin *        f 2e
*  idbcon *        f 2e
* hcomon1 *        420          2          1          5e
* hcomon1 *        420          2          1          6e
* hcomon1 *        420          2          1          7e
* hcomon1 *        420          2          1          8e
* hcomon1 *        420          2          1          9e
* hcomon1 *        420          2          1         10e
* hcomon1 *        420          2          1         11e
* hcomon1 *        420          2          1         12e
* hcomon1 *        420          2          1         13e
* hcomon1 *        420          2          1         14e
* hcomon2 *        420          2          1          5e
* hcomon2 *        420          3          1          6e
* hcomon2 *        420          3          1          7e
* hcomon2 *        420          3          1          8e
* hcomon2 *        420          3          1          9e
* hcomon2 *        420          3          1         10e
* hcomon2 *        420          3          1         11e
* hcomon2 *        420          3          1         12e
* hcomon2 *        420          3          1         13e
* hcomon2 *        420          3          1         14e
* dhtstrz *       0.11      0.653      0.522      0.522s
* dhtstrz *      0.522      0.522      0.522      0.393s
* dhtstrz *      0.232      0.118 e
*     rdk *        1.0e
*   radrd *        0.0    4.18e-4    8.37e-4   1.255e-3e
*   matrd *     150001     150001     150001e
*    nfax *     f     3e
*    rftn *     f 560.8e
*
```

AdSTM
Advanced Systems Technology and Management, Inc.

CALCULATION WORK SHEET

Subject _____ Page 2821
Prepared by _____ Checked by _____

HTSTRs for Vessel Wall

AdSTM
Advanced Systems Technology and Management, Inc.

CALCULATION WORK SHEET

Subject _____ Page 2831

Prepared by _____ Checked by _____

External Vessel Structures and Vessel Levels

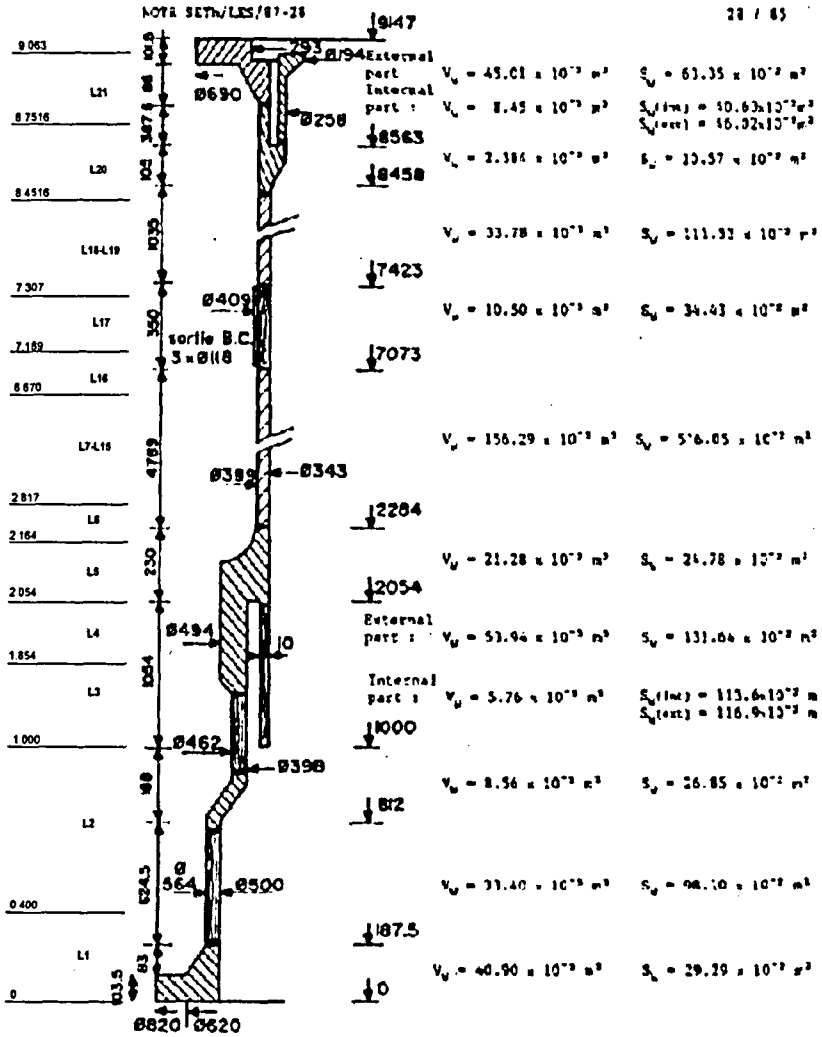

AdSTM
Advanced Systems Technology and Management, Inc.

CALCULATION WORK SHEET

Subject Vessel Wall (0.0 - 1.00 m) Page 284

Prepared by _____ Checked by _____

HTSTRs - EL0.0-1.000m

(HTSTR 920, 959, 960

Three non-powered HTSTRs are used, coupled with each sector. The three HTSTRs have the same parameters. [illegible]

total volume:

$$8.56 \times 10^{-3} + 33.40 \times 10^{-3} + 40.9 \times 10^{-3} = 8.286 \times 10^{-2}\ m^3$$

total area:

$$26.85 \times 10^{-2} + 98.10 \times 10^{-2} + 29.29 \times 10^{-2} = 1.5424\ m^2$$

thickness:

$$\frac{8.286 \times 10^{-2}}{1.5424} = 0.0537\ m$$

width:

$$\frac{1.5424}{(1.000 - 0.0)} \times \frac{1}{3} = 0.5142\ m$$

axial nodes:

Nodes	dhtstrz (m)
1	0.40
2	0.60

CALCULATION WORK SHEET

Subject _____ Page 285/

Prepared by _____ Checked by _____

List of HTSTR 920 Cards

```
*******   type          num        userid                 component name
htstr                   920           0                 PV wall 0:1.0m SEC1
*       nzhstr         ittc        hscyl          ichf
            2            0            0             1
*       nopowr        plane       liqlev        iaxcnd
            1            1            0             0
*        nmwrx         nfci        nfcil          hdri          hdro
            0            0            0         0.045         0.045
*        width
          0.5142
*         nhot        nodes        irftr         nzmax        irftr2
            0            4            0             3             0
*     dtxht(1)     dtxht(2)        dznht         hgapo
          1.0         10.0   1.000000E-3           0.0
*
*  idbcin *       f 2e
*  idbcon *       f 4e
* hcomcn1 *         420          5           1          1e
* hcomcn1 *         420          5           1          2e
* numbco2 *           2         1e
* numbco2 *           2         1e
* dhtstrz *         0.4        0.6e
*     rdx *         1.0e
*   radrd *         0.0    0.0146    0.0292     0.0537e
*   matrd *      150001      150001      150001e
*    nfax *  f     3e
*    rftn *  f 560.8e
```

CALCULATION WORK SHEET

Subject Vessel Wall - 1.000 - 2.054 m Page 286
Prepared by _____ Checked by _____

HTSTRs - EL1.000-2.054m

(922, 962 and 963)

Three non-powered HTSTRs are used, coupled with each sector. The three HTSTRs have the same parameters.

total volume:

$$53.94 \times 10^{-3}\ m^3$$

total area:

$$131.64 \times 10^{-2}\ m^2$$

thickness:

$$\frac{53.94 \times 10^{-3}}{131.64 \times 10^{-2}} = 4.10 \times 10^{-2}\ m$$

width:

$$\frac{131.64 \times 10^{-2}}{2.054 - 1.000} \times \frac{1}{3} = 0.4163\ m$$

axial nodes:

Nodes	dhtstrz (m)	
1	0.854	(L3)
2	0.200	(L4)

CALCULATION WORK SHEET

Subject _____ Page 2 87/
Prepared by _____ Checked by _____

List of HTSTR 922 cards

```
*******   type          num        userid                 component name
htstr                   922            0              RVWall-1.0:2.054-SEC1
*       nzhstr         ittc         hscyl          ichf
            2            0             0             1
*       nopowr        plane        liqlev        iaxcnd
            1            1             0             0
*        nmwrx         nfci         nfcil          hdri          hdro
            0            0             0         0.045         0.045
*        width
        0.4163
*         nhot        nodes         irftr         nzmax        irftr2
            0            4             0             3             0
*     dtxht(1)     dtxht(2)         dznht         hgapo
          1.0         10.0   1.000000E-3           0.0
*
*  idbcin *          f 2e
*  idbcon *          f 4e
* hcomon1 *        420          4          1          3e
* hcomon1 *        420          4          1          4e
* numbco2 *          2          1e
* numbco2 *          2          1e
* dhtstrz *       .854   .200e
*     rdx *       1.0e
*   radrd *       0.0  0.0137  0.0273  0.041e
*   matrd *     150001      150001      150001e
*    nfax *  f     3e
*    rftn *  f 560.8e
*
```

AdSTM
Advanced Systems Technology and Management, Inc.

CALCULATION WORK SHEET

Subject Vessel Wall (2.054 - 2.164 m) Page 2881
Prepared by _____ Checked by _____

HTSTRs - EL2.054-2.164m

Three non-powered HTSTRs are used, coupled with each sector. The three HTSTRs (964, 965 and 966) have the same parameters.

total volume:

$$21.28 \times 10^{-3} - \frac{\pi}{4} \times (0.399^2 - 0.343^2) \times (2.284 - 2.164) = 0.017366\ m^3$$

total area:

$$3.14 \times 0.343 \times (2.164 - 2.054) = 0.11847\ m^2$$

thickness:

$$\frac{0.017366}{0.11847} = 0.1466\ m$$

width:

$$\frac{0.11847}{2.164 - 2.054} \times \frac{1}{3} = 0.359\ m$$

axial nodes:

NODES	dhtstrz (m)
1	0.11 (L5)

CALCULATION WORK SHEET

Subject _____ Page 289 1
Prepared by _____ Checked by _____

List of HTSTR 964 cards:

```
*******   type          num        userid              component name
htstr                   964             0          RVWall-2.054:2.164-SEC1
*       nzhstr         ittc         hscyl          ichf
            1            0             0             1
*       nopowr        plane        liqlev        iaxcnd
            1            1             0             0
*        nmwrx         nfci         nfcil          hdri          hdro
            0            0             0         0.045         0.045
*        width
         0.359
*         nhot        nodes        irftr         nzmax        irftr2
            0            4             0             3             0
*     dtxht(1)     dtxht(2)        dznht         hgapo
          1.0         10.0   1.000000E-3           0.0
*
*  idbcin *          f 2e
*  idbcon *          f 4e
* hcomon1 *        420          3          1          5e
* numbco2 *          2          1e
* dhtstrz *       .110e
*     rdx *        1.0e
*   radrd *        0.0  0.04886  0.09772  0.1466e
*   matrd *     150001      150001      150001e
*    nfax *          3e
*    rftn *  f 560.8e
*
```

AdSTM
Advanced Systems Technology and Management, Inc.

CALCULATION WORK SHEET

Subject Vessel Wall (2.164 - 6.170 m) Page 290 1
Prepared by _____ Checked by _____

HTSTRs - EL2.164-6.170m

(931, 968 and 969)

Three non-powered HTSTRs are used, coupled with each sector. The three HTSTRs have the same parameters.

total volume:

$$\frac{\pi}{4} \times (0.399^2 - 0.343^2) \times (6.170 - 2.164) = 0.13067\ m^3$$

total area:

$$3.14 \times 0.343 \times (6.170 - 2.164) = 4.3145\ m^2$$

thickness:

$$\frac{0.13067}{4.3145} = 0.030286\ m$$

width:

$$\frac{4.3146}{6.17 - 2.164} \times \frac{1}{3} = 0.359\ m$$

axial nodes:

ELEVATION (M)	LEVELS	NODES	DHTSTRZ (M)
2.164			
2.817	6	1	0.653
3.339	7	2	0.522
3.861	8	3	0.522
4.383	9	4	0.522
4.905	10	5	0.522
5.427	11	6	0.522
5.82	12	7	0.393
6.052	13	8	0.232
6.17	14	9	0.118

CALCULATION WORK SHEET

Subject _____ Page 291 /
Prepared by _____ Checked by _____

List of HTSTR 931 cards:

```
*******   type          num        userid              component name
htstr                   931           0          RVWall-2.164:6.170SEC1
*       nzhstr         ittc        hscyl          ichf
            9            0            0             1
*       nopowr        plane       liqlev        iaxcnd
            1            1            0             0
*        nmwrx         nfci        nfcil          hdri          hdro
            0            0            0        0.0247        0.0247
*        width
         0.359
*         nhot        nodes        irftr        nzmax        irftr2
            0            4            0           42             0
*     dtxht(1)     dtxht(2)        dznht        hgapo
          1.0         10.0   1.000000E-3          0.0
*
*  idbcin *    f 2e
*  idbcon *    f 4e
* hcomon1 *        420          3          1          6e
* hcomon1 *        420          3          1          7e
* hcomon1 *        420          3          1          8e
* hcomon1 *        420          3          1          9e
* hcomon1 *        420          3          1         10e
* hcomon1 *        420          3          1         11e
* hcomon1 *        420          3          1         12e
* hcomon1 *        420          3          1         13e
* hcomon1 *        420          3          1         14e
* numbco2 *          2         1e
* numbco2 *          2         1e
* numbco2 *          2         1e
* numbco2 *          2         1e
* numbco2 *          2         1e
* numbco2 *          2         1e
* numbco2 *          2         1e
* numbco2 *          2         1e
* numbco2 *          2         1e
* dhtstr2 *      0.653 0.522 0.522 0.522 0.522s
* dhtstr2 *      0.522 0.393 0.232 0.118e
*     rdx *     1.0e
*   radrd *        0.0    0.010097    0.020193     0.03029e
*   matrd *     150001      150001      150001e
*    nfax *        f 3e
*    rftn *  f 560.8e
*
```

AdSTM
Advanced Systems Technology and Management, Inc.

CALCULATION WORK SHEET

Subject RV Wall (6.170 - 7.189 m) Page 2921
Prepared by _____ Checked by _____

HTSTRs - EL6.170-7.189m

(935, 971 and 972)

Three non-powered HTSTRs are used, coupled with each sector. The three HTSTRs have the same parameters.

total volume:

$$\frac{\pi}{4} \times (0.399^2 - 0.343^2) \times (7.073 - 6.170) + 10.50 \times 10^{-3} \times \frac{7.189 - 7.073}{7.423 - 7.073} = 0.032934\ m^3$$

total area:

$$3.14 \times 0.343 \times (7.189 - 6.170) = 1.0975\ m^2$$

thickness:

$$\frac{0.032934}{1.0975} = 0.03\ m$$

width:

$$\frac{1.0975}{7.189 - 6.170} \times \frac{1}{3} = 0.359\ m$$

axial nodes:

ELEVATION (M)	LEVELS	NODES	DHTSTRZ (M)
6.170			
6.670	15	1	0.5
7.189	16	2	0.519

AdSTM
Advanced Systems Technology and Management, Inc.

CALCULATION WORK SHEET

Subject _____ Page 293/
Prepared by _____ Checked by _____

HTSTRs - EL7.189-7. . m

(936, 974, 975)

Three non-powered HTSTRs are used, coupled with each sector. The three HTSTRs have the same parameters.

total volume:

$$10.50 \times 10^{-3} \times \frac{0.118}{0.350} = 3.54 \times 10^{-3}\ m^3$$

total area:

$$34.43 \times 10^{-2} \times \frac{0.118}{0.350} = 0.115775\ m^2$$

thickness:

$$\frac{3.54 \times 10^{-3}}{0.115775} = 0.030577\ m$$

width:

$$\frac{0.115775}{0.118} \times \frac{1}{2} = 0.327\ m$$

axial nodes:

ELEVATION (M)	LEVELS	NODES	DHTSTRZ (M)
7.189			
7.307	17	1	0.118

AdSTM
Advanced Systems Technology and Management, Inc.

CALCULATION WORK SHEET

Subject Vessel Wall 7.307 - 8.4516 Page 2991
Prepared by _____ Checked by _____

HTSTRs - EL7.307-8.4516 m

(937. 976 and 977)

Three non-powered HTSTRs are used, coupled with each sector. The three HTSTRs have the same parameters.

total volume: $(7.423 - 7.307) \times \frac{\pi}{4} \times (0.409^2 - 0.343^2) + (8.4516 - 7.423) \times \frac{\pi}{4} \times (0.399^2 - 0.343^2$

$= 0.038071 \ (m^3)$

total area: $(7.423 - 7.307) \times 3.14 \times 0.409 + (8.4516 - 7.423) \times 3.14 \times 0.399$

$+ (8.4516 - 7.307) \times 0.343 = 2.5824 (m^2)$

thickness:

$$= \frac{0.038071}{2.5824/2} = 0.029485 \ m$$

width:

$$\frac{1}{3} \times \frac{2.5824/2}{8.4516 - 7.307} = 0.376 \ m$$

axial nodes:

ELEVATION (M)	LEVELS	NODES	DHTSTRZ (M)
7.3070			
7.8793	18	1	0.5723
8.4516	19	2	0.5723

} → Coupled to Ring 3.

CALCULATION WORK SHEET

Subject Vessel Wall 8.4516-9.063 Page 2951
Prepared by _____ Checked by _____

HTSTRs - EL8.4516-9.063m

(938, 979 and 980)

Three non-powered HTSTRs are used, coupled with each sector. The three HTSTRs have the same parameters.

total volume: $45.01 \times 10^{-3} - \frac{\pi}{4} \times (0.69^2 - 0.43^2) \times (9.147 - 9.063) + 2.384 \times 10^{-3}$

$+ \frac{\pi}{4} \times (0.399^2 - 0.343^2) \times (8.458 - 8.4516)$

$= 0.028401 \ m^3$

total area:

$63.35 \times 10^{-2} - 3.14 \times (0.69 + 0.43)(9.147 - 9.063)$

$+ 46.02 \times 10^{-2} + 10.57 \times 10^{-2} + 3.14 \times (0.399 + 0.343)(8.458 - 8.4516)$

$= 1.5097 \ m^2$

thickness:

$$\frac{0.028401}{\frac{1.5097}{2}} = 0.037624 \ m$$

width:

$$\frac{1}{3} \cdot \frac{\frac{1.5097}{2}}{9.063 - 8.4516} = 0.41155 \ m$$

axial nodes:

ELEVATION (M)	LEVELS	NODES	DHTSTRZ (M)
8.4516			
8.7516	20	3	0.3
9.0630	21	4	0.3114

CALCULATION WORK SHEET

Subject RV Head (9.063 - 9.5163 m) Page 2961
Prepared by _____ Checked by _____

As shown in the figure below, three groups of HTSTRs are used to represent the upper head structure: EL9.063-9.5163, EL9.5163-10.421 and the top of the vessel.

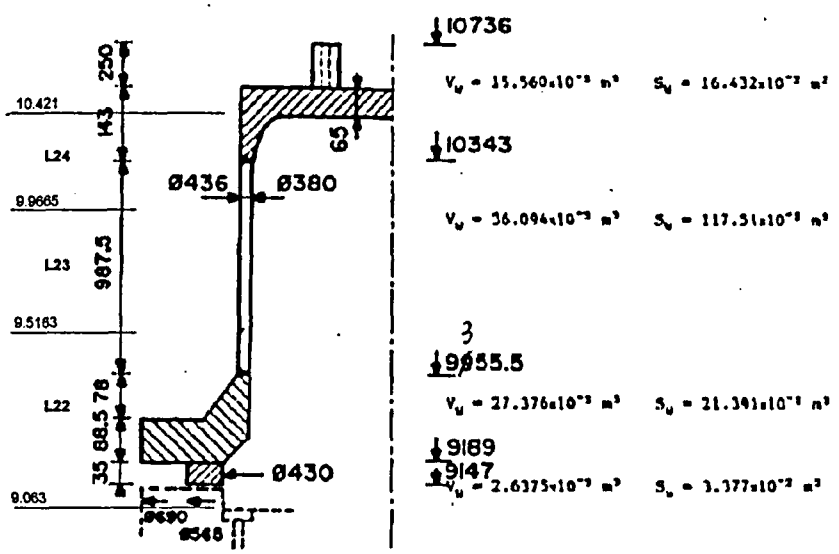

RV Head HTSTRs EL9.063-9.5163m

(939, 982 and 983)

Three non-powered HTSTRs are used, coupled with each sector. The three HTSTRs have the same parameters.

total volume: $36.094 \times 10^{-3} \times \frac{9.5163 - 9.3555}{0.9875} + 27.376 \times 10^{-3} + 2.6375 \times 10^{-3} + \frac{\pi}{4}(0.69^2 - 0.43^2) \times (9.147 - 9.063)$

$= 5.511 \times 10^{-2}\ m^3$

total area: $117.5 \times 10^{-2} \times \frac{9.5163 - 9.3555}{0.9875} + 21.391 \times 10^{-2} + 3.377 \times 10^{-2} + 3.14 \times 0.43 \times (9.147 - 9.063)$

$= 0.52926\ m^2$

CALCULATION WORK SHEET

Subject RV Head (9.063 - 9.5163 m) Page 29 of 1
Prepared by _____ Checked by _____

thickness:

$$\frac{5.511 \times 10^{-2}}{0.52926} = 0.1041 \text{ m}$$

width

$$\frac{0.52926}{9.5163 - 9.063} \times \frac{1}{3} = 0.3892 \text{ m}$$

axial nodes

ELEVATION (M)	LEVELS	NODES	DHTSTRZ (M)
9.0630			
9.5163	22	4	0.4533

AdSTM
Advanced Systems Technology and Management, Inc.

CALCULATION WORK SHEET

Subject RV Head (9.5163-10.421m) Page 298 1
Prepared by _____ Checked by _____

RV Head HTSTRs(EL9.5163-10.421m)

(940, 985 986)

Three non-powered HTSTRs are used, coupled with each sector. The three HTSTRs have the same parameters.

total volume:

$$\frac{3.14}{4} \times (0.436^2 - 0.380^2) \times (10.421 - 9.5163) = 0.028763\ m^3$$

total area:

$$3.14 \times 0.380 \times (10.421 - 9.5163) = 1.0795\ m^2$$

thickness:

$$\frac{0.028763}{1.0795} = 0.026645\ m$$

width

$$\frac{1.0795}{(10.421 - 9.5163)} \times \frac{1}{3} = 0.3977\ m$$

axial nodes

ELEVATION (M)	LEVELS	NODES	DHTSTRZ (M)
9.5163			
9.9665	23	4	0.4502
10.421	24	4	0.4545

AdSTM
Advanced Systems Technology and Management, Inc.

CALCULATION WORK SHEET

Subject _____ Page 299 1
Prepared by _____ Checked by _____

RV Top

A total of 12 non-powered HTSTRs are used to represent the RV top structure, coupling with Cells 1-12 of Level 24. In the following, parameters are derived for the HTSTRs coupled with Cell 1, 4, 7 and 10 (in sector 1).

HTSTRs coupled with Cells 1-3 (HTSTR 987, 988 and 989)

thickness: 0.065 m

area: $\frac{1}{3} \times \frac{3.14}{4} \times 0.2^2 = 1.0467 \times 10^{-2}\ m^2$

width: 0.1 m

dhtstrz: $\frac{1.0467 \times 10^{-2}}{0.1} = 1.0467 \times 10^{-1}\ m$

HTSTRs coupled with Cells 4-6 (HTSTR 990, 991 and 992)

thickness: 0.065 m

area: $\frac{1}{3} \times \frac{3.14}{4} \times (0.312^2 - 0.2^2) = 0.015\ m^2$

width: $\frac{(0.312 - 0.2)}{2} = 0.056\ m$

dhtstrz: $\frac{0.015}{0.056} = 0.267947\ m$

AdSTM
Advanced Systems Technology and Management, Inc.

CALCULATION WORK SHEET

Subject _____ Page 306 1
Prepared by _____ Checked by _____

HTSTRs coupled with Cells 7-9 (993, 994 and 995)

thickness: 0.065 m

area: $\frac{1}{3} \times \frac{\pi}{4} \times (0.343^2 - 0.312^2) = 5.313 \times 10^{-3} m^2$

width:

$$\frac{0.343 - 0.312}{2} = 0.0155 \text{ m}$$

dhtstrz:

$$\frac{5.313 \times 10^{-3}}{0.0155} = 0.34278 \text{ m}$$

HTSTRs coupled with Cells 10-12 (HTSTR 996, 997 and 998)

thickness: $\doteq 0.065$ m

area: $\frac{1}{3} \times \frac{\pi}{4} \times (0.380^2 - 0.343^2) \doteq 0.007$

width:

$$\frac{0.380 - 0.343}{2} = 0.0185 \text{ m}$$

dhtstrz:

$$\frac{0.007}{0.0185} = 0.37837 \text{ m}$$

AdSTM
Advanced Systems Technology and Management, Inc.

CALCULATION WORK SHEET

Subject HTSTRS for Tie Rods Page 30/1
Prepared by _____ Checked by _____

Non-Powered HTSTRs for Tie Rods

The 8×ϕ14mm tie rods are lumped into three non-power HTSTRs with each located in each of relative cells 7, 8 and 9.

HTSTR 10, 11, and 12

volume:

$$0.4926 \times 10^{-3} + 2.037 \times 10^{-3} = 2.5296 \times 10^{-3}\ m^3$$ (P29/85/LZS/87-28)

area:

$$14.074 \times 10^{-2} + 0.58197 = 0.7227\ m^2$$

thickness:

$$\frac{2.5296 \times 10^{-3}}{0.7227} = 0.0035\ m$$

width:

$$\frac{0.7227}{2.054} \times \frac{1}{8} = 0.117285\ m$$

axial nodes:

ELEVATION (M)	LEVEL	NODES	DHTSTRZ (M)
0.400	1	1	0.400
1.000	2	2	0.600
1.854	3	3	0.854
2.054	4	4	0.200

AdSTM
Advanced Systems Technology and Management, Inc.

CALCULATION WORK SHEET

Subject HTSTRS for Thimbles (EL0.400 - 2.054m) Page 3021
Prepared by _____ Checked by _____

Non-Powered HTSTRs for Thimbles (EL0.400-2.054)

Since most of thimbles are in Ring 1, the thimbles are lumped into three identical non-powered HTSTRs with each located in relative Cell 1, Cell 2 and Cell 3 respectively.

HTSTR 13, 14 and 15 :

volume

$1.7667 \times 10^{-3}\ m^3$ (P 29/85, /SETh/LES/87-28)

area

$1.0600\ m^2$

thickness

$$\frac{1.7667 \times 10^{-3}}{1.06} = 1.667 \times 10^{-3}\ m$$

width

$$\frac{1.060}{2.054 - 1.000} \times \frac{1}{3} = 0.3352$$

axial nodes

ELEVATION (M)	LEVEL	NODES	DHTSTRZ (M)
0.400			
1.000	2	1	0.600
1.854	3	2	0.854
2.054	4	3	0.200

AdSTM
Advanced Systems Technology and Management, Inc.

CALCULATION WORK SHEET

Subject HTSTRs for guide thimbles (EL 2.054 - 5.820 m) Page 30/31
Prepared by _____ Checked by _____

Non-Powered HTSTRs for Thimbles (EL2.054-5.820m)

Since most of thimbles are in Ring 1, the thimbles are lumped into three identical non-powered HTSTRs with each located in relative Cell 1, Cell 2 and Cell 3 respectively.

HTSTR 16, 17 and 18:

volume

$$0.2004 \times 10^{-3} + 6.617 \times 10^{-3} = 6.8174 \times 10^{-3}\ m^3$$ (P. 29/30/85 - /SETh/LZS/87-28)

area

$$0.1203 + 3.997 = 4.1173\ m^2$$

thickness

$$\frac{6.8174 \times 10^{-3}}{4.1173} = 1.656 \times 10^{-3}\ m$$

width

$$\frac{4.1173}{5.82 - 2.054} \times \frac{1}{3} = 0.36443\ m$$

axial nodes

ELEVATION (M)	NODES	DHTSTRZ (M)	LEVEL
2.054			
2.164	1	0.11	5
2.817	2	0.653	6
3.339	3	0.522	7
3.861	4	0.522	8
4.383	5	0.522	9
4.905	6	0.522	10
5.427	7	0.522	11
5.82	8	0.393	12

AdSTM
Advanced Systems Technology and Management, Inc.

CALCULATION WORK SHEET

Subject _____ Page 304 1
Prepared by _____ Checked by _____

HTSTRs for Internals between EL5.820-6.170m

The internals between EL5.820-6.170m are lumped into three non-powered HTSTRs with each located in relative Cell 4, Cell 5 and Cell 6 respectively. (5ETh/LES/87-28)

HTSTR 20, 21 and 19 :

volume $\doteq 7.7597 \times 10^{-3} - 428 \times \frac{\pi}{4} \times (9.5e-3)^2 \times (6.052 - 5.820)$

$= 7.25 \times 10^{-4}\ m^3$

area $\doteq 3.610 - 428 \times 3.14 \times (9.5e-3) \times (6.052 - 5.820)$

$= 0.648\ m^2$

thickness $\frac{7.25 \times 10^{-4}}{0.648} = 1.119 \times 10^{-3}\ m$

width $\frac{0.648}{6.170 - 5.820} \times \frac{1}{3} = 0.617$

axial nodes

ELEVATION (M)	NODES	DHTSTRZ (M)	LEVEL
5.820			
6.052	1	0.232	13
6.170	2	0.118	14

AdSTM
Advanced Systems Technology and Management, Inc.

CALCULATION WORK SHEET

Subject HTSTRs for Thimbles/RCC tube (6.170 - 9.9665m) Page 3051
Prepared by _____ Checked by _____

HTSTRs for Guide Thimbles/RCC between EL6.170-9.9665m

The guide thimbles, RCC, and RCC support structure between EL6.170-9.9665 are lumped into three identical non-powered HTSTRs located in relative cells 1, 2 and 3 respectively.

HTSTR 22, 23, and 24 :

Page (080900 48-49 update of ILES/87-2)

volume

$$0.3556 \times 10^{-3} + 3.287 \times 10^{-3} + 0.962 \times 10^{-3} = 4.605 \times 10^{-3}\ m^3$$

area

$$0.2134 + 2.320 + 0.589 = 3.1224\ m^2$$

thickness

$$\frac{4.605 \times 10^{-3}}{3.1224} = 1.475 \times 10^{-3}\ m$$

width

$$\frac{3.1224}{9.9665 - 6.170} \times \frac{1}{3} = 0.274145\ m$$

axial nodes

ELEVATION (M)	NODES	DHTSTRZ (M)	LEVEL
6.17			
6.67	1	0.5	15
7.189	2	0.519	16
7.307	3	0.118	17
7.8793	4	0.5723	18
8.4516	5	0.5723	19
8.7516	6	0.3	20
9.063	7	0.3114	21
9.5163	8	0.4533	22
9.9665	9	0.4502	23

AdSTM
Advanced Systems Technology and Management, Inc.

CALCULATION WORK SHEET

Subject Separation between the upper head and upper plenum Page 3061
Prepared by _____ Checked by _____

HTSTRs for Separation between Upper Plenum and Upper Head

The figure below shows the separation structure between the upper plenum and the upper head. HTSTRs are designed to model the top (1), the shell (2) and the bottom (3).

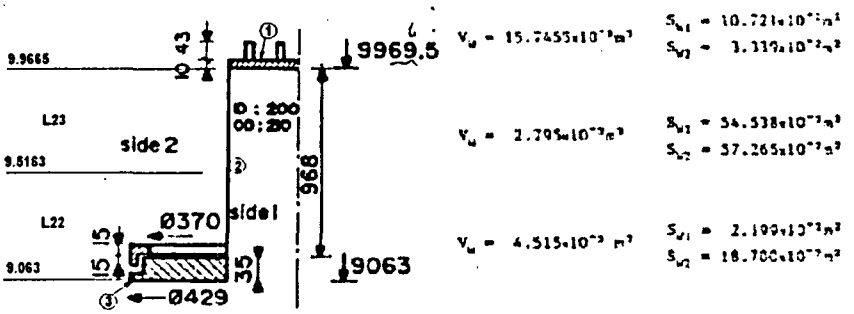

HTSTRs for Top Separation Plate

There non-powered HTSTRs are used to represent the separation top, coupling with Cells 1-3 of Level 23 and 24.

HTSTR 25, 26, and 27:

thickness: 0.010 m

area: $\frac{1}{3} \times \frac{\pi}{4} \times 0.2^2 = 1.0467 \times 10^{-2}\ m^2$

width:

0.1 m

dhtstrz: $\frac{1.0467 \times 10^{-2}}{0.1} = 0.10467\ m$

AdSTM
Advanced Systems Technology and Management, Inc.

CALCULATION WORK SHEET

Subject Separation between the upper plenum / upper head Page 307
Prepared by _____ Checked by _____

HTSTRs for Separation Shell

There non-powered HTSTRs are used to represent the separation shell, coupling ring 1 and ring 2 of Level 22 and Level 23.

HTSTR 28, 29, and 30:

thickness:

0.005 m

area:

width:

$\frac{1}{3} \times 3.14 \times 0.2 = 0.2093$ m.

Axial nodes:

Nodes	dhtstrz (m)	
1	0.4533	(L22)
2	0.4502	(L23)

AdSTM
Advanced Systems Technology and Management, Inc.

CALCULATION WORK SHEET

Subject Separation between upper head and upper plenum Page 3081
Prepared by _____ Checked by _____

HTSTRs for Separation Bottom Plate

The separation plat is treated as emerging in ring 2 of level 22. Three HTSTRs are coupled to Cells 4, 5 and 6.

HTSTR 31, 32, and 33:

volume:

$4.515 \times 10^{-3}\ m^3$

area:

$18.70 \times 10^{-2}\ m^2$

ickness:

$$\frac{4.515 \times 10^{-3}}{18.70 \times 10^{-2}/2} = 0.048289\ m$$

width :

$$\frac{18.70 \times 10^{-2}/2}{0.51\ m} \times \frac{1}{3} = 0.061\ m$$

dhtstrz: $= 9.5163 - 9.063 = 0.51\ m$ (plane = 1)

AdSTM
Advanced Systems Technology and Management, Inc.

CALCULATION WORK SHEET

Subject _____ Page 309 1
Prepared by _____ Checked by _____

Internal Wall of the Annular Downcomer-Head Bypass

As shown in the figure below, three non-powered HTSTRs are used to represent the structure 1, which couple ring 2 and ring 4 (pl. refer to notes for Level 20 and level 21.

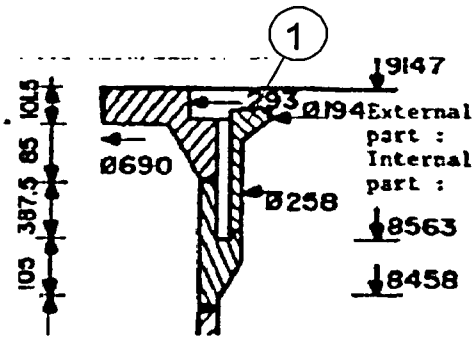

External part : $V_u = 45.01 \times 10^{-3}\ m^3$ $S_u = 63.35 \times 10^{-2}\ m^2$

Internal part : $V_u = 8.45 \times 10^{-3}\ m^3$ $S_u(int) = 40.63 \times 10^{-2} m^2$, $S_u(ext) = 46.02 \times 10^{-2} m^2$

$V_u = 2.384 \times 10^{-3}\ m^3$ $S_u = 10.57 \times 10^{-2}\ m^2$

HTSTR 34, 35, and 36

volume : $8.45 \times 10^{-3}\ m^3$

area $\dfrac{(40.63 + 46.02) \times 10^{-2}}{2} = 0.43325\ m^2$

thickness $\dfrac{8.45 \times 10^{-3}}{0.43325} = 0.0195\ m$

width $\dfrac{0.43325}{9.1063 - 8.4516} = 0.2362\ m$

AdSTM
Advanced Systems Technology and Management, Inc.

CALCULATION WORK SHEET

Subject _____ Page 31a/
Prepared by _____ Checked by _____

axial nodes

ELEVATION (M)	NODES	DHTSTRZ (M)	LEVEL
8.4516			
8.7516	1	0.3	20
9.0630	2	0.3114	21

AdSTM
Advanced Systems Technology and Management, Inc.

CALCULATION WORK SHEET

Subject _____ Page 3/1/1
Prepared by _____ Checked by _____

BETHSY SG Model Development

CALCULATION WORK SHEET

Subject _____ Page 3121
Prepared by _____ Checked by _____

The BETHSY facility consists three identical SGs. The SG will be modeled with an assembly of PIPE and TEE components. FILL components are used to represent the Main Feedwater and AUX Feedwater systems. The nodalization for the SG is shown in the next page. It includes (SG1):

PIPE 105 - U-tube
PIPE 150 - Boiler
TEE 151 - riser/steam separator/steam dome
TEE 155 - downcomer
TEE 152 - "feedwater piping"
FILL 170 - main feedwater
FILL 180 - AUX feedwater

The HTSTRs are not presented in the diagram. The HTSTRs for the SG1 include:

HTSTR 604 - PIPE 105
HTSTR 605 - PIPE 105 and 150
HTSTR 606 - PIPE 105
HTSTR 607 - PIPE 105
HTSTR 650 - PIPE 150
HTSTR 651 - PIPE 150
HTSTR 653 - PIPE 150
HTSTR 654 - PIPE 150
HTSTR 652 - TEE 151
HTSTR 655 - TEE 151/155
HTSTR 656 - TEE 151
HTSTR 657 - TEE 151
HTSTR 658 - TEE 151
HTSTR 659 - TEE 151/155
HTSTR 660 - TEE 155
HTSTR 661 - TEE 155

The SG1 decks will be obtained from modifying the SG1 decks of an ISL deck. According to the SG nodalization, the TH components and the HTSTRs/SV definitions associated with the TH components need to be modified are listed below:

PIPE 150
PIPE 155
FILL 170
FILL 180
HTSTR 652
HTSTR 655
HTSTR 656
HTSTR 657
HTSTR 658
HTSTR 659
HTSTR 660
HTSTR 661
710
/153

CALCULATION WORK SHEET

Subject _____ Page 313 1

Prepared by _____ Checked by _____

SV137
SV138
SV139
SV140
SV141

In the following discussion, a quoted component refers to a component in the ISL reference deck. For example, "PIPE 150" refers to a PIPE component in the ISL deck, while PIPE 150 is a component in this new SG model.

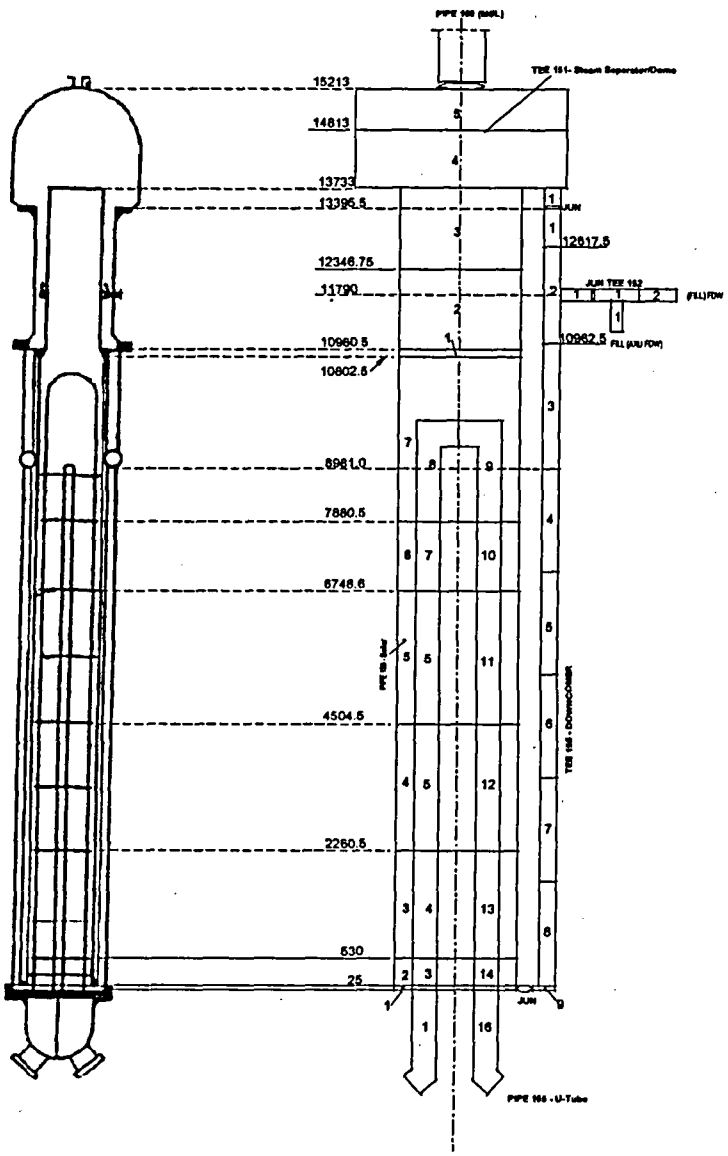

BETHSY SG Nodalization Diagram

CALCULATION WORK SHEET

Subject _____ Page 3141
Prepared by _____ Checked by _____

PIPE 150 - SG BOILER

The boiler section of SG1 is represented with PIPE 150 as shown in the nodalization diagram. PIPE 150 corresponds to CELLs 1 - 7 of "PIPE 150". The leakage path at CELL 1 of "PIPE 150" is repaced with a junction.

```
*******   type          num        userid                 component name
pipe                    150           1                         tubebun
*       ncells        nodes        jun1        jun2          epsw
            7            0       155150      150151  4.570000E-5
```

(jun1 connected to downcomer TEE 155;jun2 connected to riser/separator/steam dome - TEE 151)

```
*       nsides
            0
```

(eliminating sjuns of "PIPE 150")

```
*         ichf        iconc         iacc         ipow       npipes
            0            0            0            0            1
*        radin           th        houtl        houtv        toutl
          0.0          0.0          0.0          0.0          0.0
*        toutv        powin       powoff       rpowmx       powscl
          0.0          0.0          0.0          0.0          0.0
```

(data arrays below taken from those for CELLs 1-7 of "PIPE 150")

```
* dx    *        0.025       0.505      1.7305       2.244s
* dx    *        2.244       1.132       2.922e
* vol   *   1.43900E-3     0.02907    0.099614    0.129173s
* vol   *     0.129173    0.065162    0.168201e
* fa    *    2.5761E-2    0.055277    0.011291      0.0214s
```

(fa1 - area of J8, p51/85 of Note SETh/LES/87-28)

```
* fa    *       0.0214      0.0214      0.0214    0.065778e
* fric  *   4.00000E-3         0.0  1.71201E-5  9.62939E-6s
* fric  *   8.52763E-6  1.13365E-5  9.44055E-6         0.0e
* rfric *   4.00000E-3         0.0  1.71201E-5  9.62939E-6s
* rfric *   8.52763E-6  1.13365E-5  9.44055E-6         0.0e
* grav  *          0.0         1.0         1.0         1.0s
```

(grav1=0, horizon al flow at S1)

```
* grav  *          1.0         1.0         1.0         1.0e
* hd    *     0.02        0.038272    0.038272    0.038272s
```

(hd1 - hd of J8, p51/85 of Note SETh/LES/87-28)

```
* hd    *     0.038272    0.038272    0.038272       0.328e
```

AdSTM
Advanced Systems Technology and Management, Inc.

CALCULATION WORK SHEET

Subject _____ Page 315/

Prepared by _____ Checked by _____

```
* nff    *          1          1          1          1s
* nff    *          1          1          1          1e
* alp    *        0.0        0.0   0.022237   0.156485s
* alp    *   0.276991     0.3145   0.300332e
* vl     *        0.0   0.310822   1.526117   0.826293s
* vl     *   0.946871   1.091659   1.144042   0.360952e
* vv     *        0.0    0.31416   2.093682   1.564165s
* vv     *   1.395357   1.464617   1.608429    0.72111e
* tl     *  555.84342 556.854557 558.780398 558.696394s
* tl     * 558.567617 558.480269 558.353771e
* tv     * 558.836225 558.816709 558.734072 558.604862s
* tv     * 558.474942  558.38403 558.278491e
* p      * 6.982057E6 6.980045E6 6.971593E6 6.958258E6s
* p      * 6.944952E6 6.935728E6 6.924833E6e
* pa     *        0.0        0.0        0.0        0.0s
* pa     *        0.0        0.0        0.0e
*
```

CALCULATION WORK SHEET

Subject _____ Page 316 /
Prepared by _____ Checked by _____

TEE 151 - SG RISER/SEPARATOR/STEAM DOME

The riser/separator/steam dome section of SG1 is represented with TEE 151. The main tube of TEE 151 corresponds CELLs 8-12 of "PIPE 150" and its branch tube corresponds CELL1 of "PIPE 155". The input cards for TEE 151 are listed below along some notes.

```
*******   type          num        userid                 component name
tee                     151          1                         SG riser
*        jcell         nodes        ichf          cost          epsw
            4             0           0          -1.0    4.570000E-5
```

(the branch tube of TEE 151 is connected to CELL 4 and parralel to its main tube - cost =-1.0)

```
*       iconc1        ncell1        jun1         jun2         ipow1
            0             5        150151       160             0
*       radin1         th1        houtl1       houtv1       toutl1
          0.0          0.0          0.0          0.0          0.0
*       toutv1        pwin1       pwoff1       rpwmx1       pwscl1
          0.0          0.0          0.0          0.0          0.0
*       iconc2        ncell2        jun3        ipow2
            0             1        151155          0
```

(jun3 connects the downcomer TEE 155, eliminating the sjun between "PIPE 150" and "PIPE 155".)

```
*       radin2          th2        houtl2       houtv2       toutl2
          0.0          0.0          0.0          0.0          0.0
*       toutv2        pwin2       pwoff2       rpwmx2       pwscl2
          0.0          0.0          0.0          0.0          0.0
*       ientrn
            0
```

(data arrays for the main tube taken from those for CELL 8-12 of "PIPE 150")

```
* dx1   *      0.158   1.38625     1.38625       1.08s
* dx1   *      0.4e
* vol1  *   0.010393   0.06754     0.06754     0.54287s
* vol1  *   0.13404e
* fa1   *   0.065778  0.048695    0.048695    0.048695s
* fa1   *   0.502655  1.14000E-3e
* fric1 *       0.0  0.0  8.98106E-5  1.00963E-4s
* fric1 *       0.0  5.01316E-3e
* rfric1*      0.0  0.0  8.98106E-5  1.00963E-4s
* rfric1*      0.0  5.01316E-3e
* grav1 *        1.0  1.0  1.0  1.0s
* grav1 *        1.0  1.0e
  hd1   *      0.328  0.249       0.249       0.249s
  hd1   *      0.8    0.0381e
```

CALCULATION WORK SHEET

Subject _____ Page 317 1
Prepared by _____ Checked by _____

```
* nff1  *     1          1          1          1          1s
* nff1  *     1e
* alp1  *    0.307636s
* alp1  *    0.307983   0.306043   0.856605        1.0e
* vl1   *    0.360952s
* vl1   *    0.492428   0.492493   0.490948  -0.269534s
* vl1   *   12.669283e
* vv1   *    0.72111s
* vv1   *    0.959652   0.962023   0.971902   0.033683s
* vv1   *   12.709974e
* tl1   *  558.25639s
* tl1   *  558.175574 558.105506 558.055534 558.042375e
* tv1   *  558.188664s
* tv1   *  558.160611 558.090166 558.050044 558.042304e
* p1    *  6.916838E6s
* p1    *  6.912828E6 6.905675E6 6.901367E6 6.900570E6e
* pa1   *         0.0s
* pa1   *         0.0        0.0        0.0        0.0e
```

(data arrays for the branch tube taken from those for CELL 1 of "PIPE 155")

```
* dx2   *         0.3375e
* vol2  *  0.14922e
* fa2   *  0.44915   0.09648e
* fric2  *  0.0  6.35264E-5e
* rfric2 *  0.0  6.35264E-5e
* grav2 *      -1.0        -1.0e
* hd2   *      0.539       0.176e
* nff2  *          1           1e
* alp2  *         0.890228e
* vl2   *  0.257453    1.570779e
* vv2   *  -9.02931E-7    -1.79623e
* tl2   *  558.057141e
* tv2   *  558.079787e
* p2    *  6.902283E6e
* pa2   *         0.0e
*
```

CALCULATION WORK SHEET

Subject _____ Page 3181
Prepared by _____ Checked by _____

TEE 155 - SG DOWNCOMER

```
*******   type          num        userid                 component name
tee                     155          1                         fwdinlet
*        jcell        nodes        ichf          cost            epsw
            2            0           0           0.0     4.570000E-5
```

(Cell 2 - feedwater in, eliminating the two sjuns of "PIPE 155")

```
*       iconc1       ncell1        jun1        jun2        ipow1
            0            9      151155      155150            0
```

(the main tube of TEE 155 corresponds to Cell 2 - 9 of "PIPE 155". CELL 2 of "PIPE 155" is spilt into two cells - CELL 1 and CELL 2 of TEE 155)

```
*       radin1         th1      houtl1      houtv1      toutl1
           0.0         0.0         0.0         0.0         0.0
*       toutv1       pwin1     pwoff1     rpwmx1     pwscl1
           0.0         0.0         0.0         0.0         0.0
*       iconc2       ncell2        jun3       ipow2
            0            1      152155           0
```

jun3 connects feedwater line)

```
*       radin2         th2      houtl2      houtv2      toutl2
           0.0         0.0         0.0         0.0         0.0
*       toutv2       pwin2     pwoff2     rpwmx2     pwscl2
           0.0         0.0         0.0         0.0         0.0
*       ientrn
            0
```

(data arrays for the main tube are taken from those for CELLs 2-9 of "PIPE155")

```
* dx1   *       0.778       1.655s
* dx1   *       1.9815      1.7912s
* dx1   *       1.7912      1.7912      1.7912      1.7912s
* dx1   *        0.025e
* vol1  *        0.07683     0.16345s
* vol1  *      0.06336     0.010453s
* vol1  *     0.010453     0.010453    0.010453    0.010453s
* vol1  *   3.03500E-3e
* fa1   *      0.09648     0.09648s
* fa1   *     0.030415   5.83600E-3s
* fa1   *   5.83600E-3   5.83600E-3   5.83600E-3   5.83600E-3s
* fa1   *   5.83600E-3   2.5761E-2e
* fric1 *   6.35264E-5   0.0s
* fric1 *   1.35531E-5   1.14242E-5s
* fric1 *          0.0         0.0         0.0         0.0s
* fric1 *   2.37309E-5   4.00000E-3e
* rfric1*   6.35264E-5   0.0s
* rfric1* 1.35531E-5   1.14242E-5s
* rfric1*          0.0         0.0         0.0         0.0s
```

CALCULATION WORK SHEET

Subject _____ Page 319

Prepared by _____ Checked by _____

```
* rfric1*   2.37309E-5  4.00000E-3e
* grav1 *        -1.0        -1.0        -1.0s
* grav1 *        -1.0        -1.0        -1.0        -1.0s
* grav1 *        -1.0        -1.0         0.0e
* hd1   *       0.176     0.176s
* hd1   *       0.05983     0.0431s
* hd1   *       0.0431      0.0431      0.0431      0.0431s
* hd1   *       0.0431        0.02e
* nff1  *            1           1           1s
* nff1  *            1           1           1           1s
* nff1  *            1           1           1e
* alp1  *     4.54714E-4        4.54714E-4s
* alp1  *     0.0         0.0s
* alp1  *          0.0         0.0         0.0         0.0s
* alp1  *          0.0e
* vl1   *     1.570779   1.570779s
* vl1   *     0.564434    2.942795s
* vl1   *     2.943122    2.943366    2.943538    2.943641s
* vl1   *     2.943677         0.0e
* vv1   *  -1.79623   0.495005s
* vv1   *  0.495005    2.940261s
* vv1   *     2.940151    2.940401    2.940578    2.940684s
  vv1   *     2.940724         0.0e
* tl1   *   555.770973  555.770973s
* tl1   *   555.782226  555.785093s
* tl1   *   555.788842  555.792581  555.796313   555.80004s
* tl1   *   555.801926e
* tv1   *   558.125203  558.125203s
* tv1   *   558.287872  558.368069s
* tv1   *   558.472885  558.577287  558.681345  558.785134s
* tv1   *   558.837641e
* p1    *   6.909074E6  6.909074E6s
* p1    *   6.925691E6  6.933912E6s
* p1    *   6.944669E6  6.955396E6  6.966100E6  6.976790E6s
* p1    *   6.982203E6e
* pa1   *          0.0         0.0         0.0s
* pa1   *          0.0         0.0         0.0         0.0s
* pa1   *          0.0         0.0e
*
* dx2   *          0.5 e
* vol2  *   2.6533E-4e
```

$$vol2 = 0.5 \times \frac{3.14}{4} \times 0.026^2 = 0.000265m^3$$

(feedwater inlet diameter = 0.026m)

```
* fa2   *   f 5.3066E-4e
```

$$a2 = \frac{3.14}{4} \times 0.026^2 = 0.000531m^2$$

CALCULATION WORK SHEET

Subject _____ Page 3201
Prepared by _____ Checked by _____

```
* fric2  *  6.35264E-5    0.0  e
* rfric2 *  6.35264E-5    0.0  e
```

The fric2/rfric2 values have no bearing on calcuation since the feedwater flow is controlled by FILL170 or FILL180

```
* grav2 *       0.0        0.0e
* hd2   *       0.026       0.026e
```

feedwater line inner diameter = 0.026m

```
* nff2  *            1           1e
* alp2  *          0.0e
* vl2   *          1.16065e
```

$$vl2 = \frac{massflowrate}{density.flowarea} = \frac{5.210289e-1}{8.459e+02 \cdot 5.3066e-4} = 1.160653$$

```
* vv2   *   0.0    0.0e
* tl2   *   493.15e
* tv2   *   493.15e
```

feedwater temperature = 493.15F

```
* p2    *   6.930E6e
* pa2   *      0.0e
*
```

CALCULATION WORK SHEET

Subject _____ Page 321/

Prepared by _____ Checked by _____

TEE 152 - FWD PIPING

TEE 152 is created to provide connections to feedwater in (FILL 170 and FILL 180). The cell geometry data of TEE 152 are taken from the side tube of TEE 155 and TH initial paramenters are taken from those for "FILL 170". The input cards are listed below:

```
*******   type          num        userid              component name
tee                     152          1                      fwdline
*        jcell        nodes        ichf          cost          epsw
             2            0           0           0.0   4.570000E-5
*       iconc1       ncell1        jun1          jun2         ipow1
             0            3      152155           175             0
*       radin1          th1      houtl1        houtv1        toutl1
           0.0          0.0         0.0           0.0           0.0
*       toutv1        pwin1      pwoff1        rpwmx1        pwscl1
           0.0          0.0         0.0           0.0           0.0
*       iconc2       ncell2        jun3         ipow2
             0            1         185             0
*       radin2          th2      houtl2        houtv2        toutl2
           0.0          0.0         0.0           0.0           0.0
*       toutv2        pwin2      pwoff2        rpwmx2        pwscl2
           0.0          0.0         0.0           0.0           0.0
*       ientrn
             0
* dx1    *  f 0.5      0.5e
* vol1   *  f 2.6533E-4e
* fa1    *  f 5.3066E-4e
* fric1  *  f 0.0e
* rfric1*   f 0.0e
* grav1  *  f 0.0e
* hd1    *  f 0.026e
* nff1   *  f 1e
* alp1   *  f 0.0e
* vl1    *  f 1.16065e
* vv1    *  f 0.0e
* tl1    *  f 493.15e
* tv1    *  f 493.15e
* p1     *  f 6.930e6e
* pa1    *  f 0.0e
*
* dx2    *   0.5e
* vol2   *   2.6533E-4e
* fa2    *   f 5.3066E-4e
* fric2  *   6.35264E-5 0.0e
* rfric2*    6.35264E-5 0.0e
* grav2  *   f 0.0e
* hd2    *   f 0.026e
* nff2   *   f 1e
  alp2   *   f 0.0e
  vl2    *   f 0.0e
```

CALCULATION WORK SHEET

Subject _____ Page 3271
Prepared by _____ Checked by _____

```
* vv2    *   f 0.0e
* tl2    *   493.15e
* tv2    *   493.15e
* p2     *   6.930e6e
* pa2    *   0.0e
```

CALCULATION WORK SHEET

Subject _____ Page 8231
Prepared by _____ Checked by _____

FILL 170 and FILL 180

DXIN and VOLIN of "FILL 170" and "FILL 180" are modified to be consistant with TEE 152.

```
*******   type          num        userid              component name
fill                    170          170               main feedwater
*         jun1         ifty         ioff
           175            8            0
*         iftr         ifsv         nftb        nfsv         nfrf
          -450            1           -2           0            0
*       twtold        rfmxv       concin        felv
            0.0       10.0e8          0.0         0.0
*         dxin         volin        alpin        vlin         tlin
           0.5~~1.0~~  2.6533E-4~~0.098755~~   0.0          0.0        493.15
*          pin          pain       flowin        vvin         tvin
       6.930e6           0.0   5.210289e-1       0.0       493.15
*        vmscl         vvscl
           1.0           1.0
*       vmtbm
*        time      mass flow rate
           0.0        5.210289e-1 s
           5.0                0.0 e
*
*******   type          num        userid              component name
fill                    180            1                aux feedwater
*         jun1         ifty         ioff
           185           10            0
*         iftr         ifsv         nftb        nfsv         nfrf
             0            0            0           0            0
*       twtold        rfmx        concin        felv
            0.0   1.000000E9          0.0         0.0
*         dxin         volin        alpin        vlin         tlin
           .5~~1.0~~  ~~0.098755~~2.6533E-4     0.0          0.0       307.150
*          pin          pain       flowin        vvin         tvin
   6.930000E6           0.0          0.0         0.0          0.0
*       ifmlsv       ifmvsv       iftlsv      iftvsv       ifasv
          -126          180          181         182          183
*         ifpsv      ifpasv       ifcnsv
           184          185          186
*
*
```

AdSTM
Advanced Systems Technology and Management, Inc.

CALCULATION WORK SHEET

Subject _____ Page 3241
Prepared by _____ Checked by _____

Update SV definitions

* SG1 steam flow rate				
10	69	151~~0~~	6~~13~~	0
* SG1 pressures				
153	21	151~~0~~	4~~11~~	0
* SG1 mass inventory				
137	76	15~~0~~1	~~8~~1	0
138	76	151~~0~~	~~9~~2	0
139	76	15~~0~~1	~~10~~3	0
140	76	151~~0~~	~~11~~4	0
141	76	151~~0~~	~~12~~5	0

CALCULATION WORK SHEET

Subject _____ Page 3x5 1
Prepared by _____ Checked by _____

HTSTRs of SG1

The nodalization of HTSTRs to be modified as listed above has no changes except for HTSTR 655. HTSTR 655 currently uses 4 axial nodes to accommodate TEE 155. Input cards are listed below are those modified HTSTRs.

HTSTR 652

```
*******   type          num        userid              component name
htstr                   652           0        SG1 Boiler upper flang
*       nzhstr         ittc        hscyl          ichf
            1            0            1             1
*       nopowr        plane       liqlev        iaxcnd
            1            1            0             0
*        nmwrx         nfci        nfcil          hdri          hdro
            0            0            0      0.027515      0.027515
*         nhot        nodes        irftr         nzmax        irftr2
            0            4            0             4             0
*     dtxht(1)     dtxht(2)        dznht         hgapo
          1.0         10.0   1.000000E-3           0.0

*  idbcin *          2e
*  idbcon *          4e
* hcomon1 *        151          1          0          0e
* numbco2 *          2          1e
* dhtstrz *      0.158e
*     rdx *        1.0e
*   radrd *      0.164    0.181857    0.199714    0.217571e
*   matrd *     150001      150001      150001e
*    nfax *          3e
*    rftn *  558.261163  558.279839  558.292165  558.296375e
*
```

HTSTR 655

```
*******   type          num        userid              component name
htstr                   655           0        SG1 upper cylinder she
*       nzhstr         ittc        hscyl          ichf
            4            0            1             1
*       nopowr        plane       liqlev        iaxcnd
            1            1            0             0
*        nmwrx         nfci        nfcil          hdri          hdro
            0            0            0         0.249         0.261
*         nhot        nodes        irftr         nzmax        irftr2
            0            4            0            12             0
*     dtxht(1)     dtxht(2)        dznht         hgapo
          1.0         10.0   1.000000E-3           0.0

  idbcin *        f  2e
```

CALCULATION WORK SHEET

Subject _____ Page 326/

Prepared by _____ Checked by _____

```
*  idbcon *        f  2e
* hcomon1 *        151          2          0          0e
* hcomon1 *        151          3          0          0e
* hcomon1 *        151          3          0          0e
* hcomon1 *        151          3          0          0e
* hcomon2 *        155          2          0          0e
* hcomon2 *        155          2          0          0e
* hcomon2 *        155          1          0          0e
* hcomon2 *        151          6          0          0e
* dhtstrz *     1.38425     0.27075     0.778  0.3375e
*     rdx *        1.0e
*   radrd *      0.1245      0.1265      0.1285      0.1305e
*   matrd *      150001      150001      150001e
*    nfax *           f 3e
*    rftn *  f 557.076832e
*
```

HTSTR 656

```
*******   type          num        userid              component name
htstr                   656            0           SG1 Separator region
*       nzhstr         ittc        hscyl          ichf
            1            0            1             1
*       nopowr        plane       liqlev        iaxcnd
            1            1            0             0
*        nmwrx         nfci        nfcil          hdri          hdro
            0            0            0           0.8          0.85
*         nhot        nodes        irftr         nzmax        irftr2
            0            4            0             4             0
*     dtxht(1)      dtxht(2)        dznht         hgapo
          1.0         10.0   1.000000E-3           0.0
*
*  idbcin *          2e
*  idbcon *          4e
* hcomon1 *        151          4          0          0e
* numbco2 *          2          1e
* dhtstrz *       1.08e
*     rdx *        1.0e
*   radrd *        0.4     0.408333    0.416667       0.425e
*   matrd *     150001      150001      150001e
*    nfax *          3e
*    rftn *   558.05587  558.056039  558.056148  558.056186e
*
```

HTSTR 657

```
*******   type          num        userid              component name
htstr                   657            0                     SG1 Dome
*       nzhstr         ittc        hscyl          ichf
            1            0            1             1
*       nopowr        plane       liqlev        iaxcnd
```

CALCULATION WORK SHEET

Subject _____ Page 327 1
Prepared by _____ Checked by _____

```
              1             1             0             0
*         nmwrx          nfci         nfci1          hdri          hdro
              0             0             0      0.799754      0.839754
*          nhot         nodes         irftr         nzmax        irftr2
              0             4             0             4             0
*      dtxht(1)       dtxht(2)         dznht         hgapo
            1.0          10.0   1.000000E-3           0.0
*
*   idbcin *          2e
*   idbcon *          4e
*  hcomon1 *         151           5           0           0e
*  numbco2 *           2          1e
*  dhtstrz *         0.4e
*      rdx *          1.0e
*    radrd *    0.399877    0.406543     0.41321    0.419877e
*    matrd *      150001      150001      150001e
*     nfax *          3e
*     rftn *  558.042799  558.042958  558.043058  558.043092e
*
```

HTSTR 658

```
******   type           num        userid                 component name
htstr                   658             0          SG1 DC top outer shell
*        nzhstr        ittc         hscyl          ichf
              1           0             1             1
*        nopowr       plane        liqlev        iaxcnd
              1           1             0             0
*         nmwrx        nfci         nfci1          hdri          hdro
              0           0             0           0.8           0.8
*          nhot       nodes         irftr         nzmax        irftr2
              0           4             0             4             0
*      dtxht(1)     dtxht(2)         dznht         hgapo
            1.0        10.0   1.000000E-3           0.0
*
*   idbcin *          2e
*   idbcon *          4e
*  hcomon1 *         151           6           0           0e
*  numbco2 *           2          1e
*  dhtstrz *      0.3375e
*      rdx *          1.0e
*    radrd *    0.527499    0.545101    0.562703    0.580305e
*    matrd *      150001      150001      150001e
*     nfax *          3e
*     rftn *  558.083407  558.115357  558.136606  558.143992e
*
```

HTSTR 659

CALCULATION WORK SHEET

Subject _____ Page 32 of 1
Prepared by _____ Checked by _____

```
*******    type          num        userid                 component name
htstr                    659          0              SG1 DC upper sleeve
*        nzhstr         ittc       hscyl            ichf
             2            0           1               1
*        nopowr        plane      liqlev          iaxcnd
             1            1           0               0
*         nmwrx         nfci       nfcil            hdri            hdro
             0            0           0        0.424517        0.473577
*          nhot        nodes       irftr           nzmax          irftr2
             0            4           0               4               0
*      dtxht(1)      dtxht(2)       dznht           hgapo
           1.0         10.0   1.000000E-3           0.0
*
*  idbcin *          f  2e
*  idbcon *          f  1e
* hcomon1 *          155          1           0           0e
* hcomon1 *          151          6           0           0e
*qflxbco2 *            3.1    300.0e
*qflxbco2 *            3.1    300.0e
* dhtstrz *        1.655 0.778e
*     rdx *           1.0e
*   radrd *     0.212258    0.220436    0.228614    0.236792e
   matrd *       150001      150001      150001e
    nfax *          f  3e
*    rftn *  f  555.772014e
*
```

HTSTR 660

```
*******    type          num        userid                 component name
htstr                    660          0            SG1 DC multitube and r
*        nzhstr         ittc       hscyl            ichf
             1            0           1               1
*        nopowr        plane      liqlev          iaxcnd
             1            1           0               0
*         nmwrx         nfci       nfcil            hdri            hdro
             0            0           0          0.0689          0.0833
*          nhot        nodes       irftr           nzmax          irftr2
             0            4           0              12               0
*      dtxht(1)      dtxht(2)       dznht           hgapo
           1.0         10.0   1.000000E-3           0.0
*
*  idbcin *           2e
*  idbcon *           1e
* hcomon1 *          155          3           0           0e
*qflxbco2 *            3.1    300.0e
* dhtstrz *       1.9815e
*     rdx *           1.0e
   radrd *     0.300188     0.30158    0.302973    0.304365e
   matrd *       150001      150001      150001e
```

CALCULATION WORK SHEET

Subject _____ Page 32-1
Prepared by _____ Checked by _____

```
*    nfax *            f 3e
*    rftn *  555.782909  555.782923  555.782929  555.782931e
*
```

HTSTR 661

```
*******    type          num        userid                 component name
htstr                    661            0          SG1 DC lower multitube
*        nzhstr         ittc         hscyl           ichf
             5            0             1              1
*        nopowr        plane        liqlev         iaxcnd
             1            1             0              0
*         nmwrx         nfci         nfcil           hdri          hdro
             0            0             0         0.0431        0.0483
*          nhot        nodes         irftr          nzmax        irftr2
             0            4             0             20             0
*      dtxht(1)      dtxht(2)        dznht          hgapo
           1.0         10.0   1.000000E-3            0.0
*
*  idbcin *          2           2           2           2s
*  idbcin *          2e
*  idbcon *          1           1           1           1s
   idbcon *          1e
* hcomon1 *        155           4           0           0e
* hcomon1 *        155           5           0           0e
* hcomon1 *        155           6           0           0e
* hcomon1 *        155           7           0           0e
* hcomon1 *        155           8           0           0e
*qflxbco2 *          3.1    300.0e
*qflxbco2 *          3.1    300.0e
*qflxbco2 *          3.1    300.0e
*qflxbco2 *          3.1    300.0e
*qflxbco2 *          3.1    300.0e
* dhtstrz *      1.7912      1.7912      1.7912      1.7912s
* dhtstrz *      1.7912e
*     rdx *         1.0e
*   radrd *    0.085497    0.086416    0.087335    0.088254e
*   matrd *      150001      150001      150001e
*    nfax *           3           3           3           3s
*    nfax *           3e
*    rftn *  555.785622  555.785638  555.785638  555.785639s
*    rftn *  555.789253  555.789265  555.789265  555.789266s
*    rftn *  555.792883  555.792892  555.792893  555.792894s
*    rftn *  555.796512   555.79652  555.796521  555.796522s
*    rftn *  555.800142  555.800148   555.80015  555.800151e
*
```

AdSTM
Advanced Systems Technology and Management, Inc.

CALCULATION WORK SHEET

Subject _____ Page 330/
Prepared by _____ Checked by _____

UPDATE SG2&SG3 USING THE NEW SG1 MODEL

The three SGs in the BETHSY facility are identical. SG2 and SG3 are updated with the new SG1 model. Correspondence between SG1 and SG2, SG1 and SG3 are listed in the table below.

SG1 (NEW MODEL)		SG2 (old model)		SG3 (old model)	
TYPE	ID	TYPE	ID	TYPE	ID
PIPE	150	PIPE	250	PIPE	350
TEE	151	PIPE	250	PIPE	350
PIPE	155	PIPE	255	PIPE	355
HTSTR	652 (151)	HTSTR	752(250)	HTSTR	852(350)
HTSTR	655 (151/155)	HTSTR	755(250/255)	HTSTR	855(350/355)
HTSTR	656 (151)	HTSTR	756 (250)	HTSTR	856 (350)
HTSTR	657 (151)	HTSTR	757 (250)	HTSTR	857 (350)
HTSTR	658 (151)	HTSTR	758 (255-1)	HTSTR	858 (355-1)
HTSTR	659 (155)	HTSTR	759 (255)	HTSTR	859 (355)
HTSTR	660 (155)	HTSTR	760 (255)	HTSTR	860 (355)
HTSTR	661 (155)	HTSTR	761 (155)	HTSTR	861 (355)
SV	10 (151-S6)	SV	20 (250-S13)	SV	30 (350-S13)
SV	153 (151-C4)	SV	253(250-C11)	SV	353(350-C11)
SV	137(151-C1)	SV	237(250-C8)	SV	337(350-C8)
SV	138(151-C2)	SV	238(250-C9)	SV	238(250-C9)
SV	139(151-C3)	SV	239(250-C10)	SV	239(250-C10)
SV	140(151-C4)	SV	240(250-C11)	SV	240(250-C11)
SV	141(151-C5)	SV	241(250-C12)	SV	241(250-C12)