Monticello Nuclear Generating Plant responded in May of 1987 to the NRC regarding *Generic Letter 87-05, Request for Additional Information Assessment of Licensee Measures to Mitigate and/or Identify Potential Degradation of Mark I Drywells*. The letter included a discussion on Monticello's 3-drain paths for removing leakage that may result from refueling or from spills of water into the drywell air gap. The discussion is summarized below.

"The first path prevents drywell refueling bellows leakage from entering the air gap. This consists of a channel with one 4-inch drain line located beneath the bellows. The second path is at the air gap to sand pocket interface where there is a galvanized steel plate which is sealed to the drywell shell and the surrounding concrete. Four 4-inch drain lines are provided to remove water which might collect on the plate from above. The third pathway is from the sand pocket itself. The sand pocket is provided with four 2-inch drain lines which are filled with sand to prevent loss of and from the sand pocket."

Additionally the response states that the outlets for the sand pocket drains and air gap drains were inspected following the Oyster Creek event. All were found to be unobstructed with just a partial blockage at one of the four sand pocket drains believed to be deposits of calcium carbonate resulting from drying of the sand pocket during construction and not leakage. The outlets for the drywell refueling bellows leakage drains tie into a common closed drain to radwaste which is used routinely following refueling indicating that it is not plugged. Monticello followed up with qualitative testing of the drywell air gap drain lines, from inlets to outlets, using compressed air to establish flow through each line verifying lines were not plugged. Additionally Monticello committed to ensuring that the drain line outlets are not obstructed by revising the reactor cavity flooding procedure to including a prerequisite to inspection the sand pocket and air gap drain outlets.

In the GL response to the NRC inquiry regarding activities performed or planned to minimize the possibility of leakage form the refueling cavity, the letter stated that, "all sealing materials between the refueling cavity and the drywell air gap are steel which are joined by watertight welds. No preventive maintenance is specified for these components and no formal inspections are currently performed. The drywell refueling bellows is designed for 360 cycles. The manufacturer of the bellows, Tube Turns, indicated that no preventive maintenance or inspection activities are required if cycles are not exceeded."

The response to GL 87-05 concludes with a discussion on the drywell shell thickness measurements taken as part of the Monticello Plant Life Extension Program (PLEX) in 1986. Eight (8) ultrasonic thickness measurements were taken where an area of the drywell concrete floor was removed (section 1 foot x 1 foot x 8 inches deep). The exterior of the drywell shell for this location is in the sand pocket. The results of the measurements ranged from 1.072 inches to

1.107 inches. No thinning of the exterior shell was detected. The ~~minimum~~ design thickness for this area of the drywell shell is 1.0 inches.

In late 1987, Monticello performed additional UT examinations of the drywell shell sand pocket region. A deeper portion of the drywell concrete floor was removed in order to measure the shell thickness adjacent to the entire depth of the sandpocket. UT measurements ranged from 1.065 inches to 1.13 inches. However, some surface corrosion was noted where the concrete floor meets the inside shell of the drywell. This was attributed to the joint sealant that was used during initial construction. The joint was modified by removing the original sealant and replacing it with non-shrink grout and a new type of sealant that will not promote corrosion. This work was performed under Modification 92Q230.

Before flooding the reactor well (cavity), the air gap drain outlets and the sand pocket drain outlets are visually inspected to ensure there are no blockages per MNGP Procedure 9210, Master RPV Disassembly Procedure.

MNGP Procedure 9001, Reactor Well & Dryer-Separator Storage Pool Filling Procedure, requires that the air gap drains and sand pocket drains be checked for signs of leakage once the water level is above the bellow seals.

In the LRA, Monticello included the drywell to reactor building bellows assembly in scope of license renewal in accordance with 10 CFR 54.4(a)(2). The aging management review included a review of plant operating history for leakage of water into the air gap. Review of OE found no indication of leakage into the air gap region. Based on this information it was determined that further evaluation was not required.

MNGP's Response to RAI 3.5.2-07, which questioned this issue, was forwarded to the NRC on October 28, 2005.

Internal Correspondence

NSP

Date Dec. 2, 1987

From M. Hugo

Location Int'l Centre 3

To R. Fox

Location Monticello

Subject Judgment on Containment liner corrosion
To Help Conclude Project E87D001

Dear Mr. Fox:

On Tuesday, November 10, 1987 I visited Monticello to survey the corrosion damage found beneath the grout at the floor/containment liner interface in the Monticello containment.

As the result of this visual inspection, supplemented with mechanical removal of the corrosion with wire brushes and chisels I would conclude that: Should the situation be left as is there would be no threat to containment integrity due to this corrosion. Also, "as is" the existing corrosion would even pass Class D cleanliness criteria of ANSI N45.2.1.-1973, and with a complete wire brush treatment this could be upgraded to even a Class C or B.

With this judgment in mind, it would be recommended that no extraordinary efforts be made to "correct" the situation that now exists. Removal of the current grout and wire brushing the surface would be more than enough, and there is evidence that this might be excessive and not economically justifiable. That decision will have to be made by NE&C.

Yours truly,

Mark Hugo

Mark Hugo
Senior Eng., PPM M&SP

FOX.ONE

D1004
1/2

S/N	RU4505	U	S	LW	HEROTECH	---	.
S/N	NA	NA	NA	NA	NA	NA	NA

AMPLITUDE LINEARITY: SIGNAL 2 SHALL EQUAL 50% OF SIGNAL 1 ± 5% OF FSH

SIGNAL 1 (SET):	100	90	80	70	60	50	40	30	20	10
SIGNAL 2 (READ):	50	45	41	36	30	25	20	16	10	5

AMPLITUDE CONTROL LINEARITY: SIGNAL AMPLITUDE MUST BE WITHIN ACCEPTABLE LIMITS

AMPLITUDE SETTING:	80% - 6dB	80% - 12dB	40% + 6dB	20% + 12dB
ACCEPTABLE LIMITS:	32% to 48%	16% to 24%	64% to 96%	64% to 96%
ACTUAL % FSH:	40	20	80	80

INSTRUMENT SETTINGS:	Straight Beam		Straight Beam
Gain	38		N/A
Attentuation	NA	Digital	
Sweep	25/820	Velocity	
Delay	1/689	Zero	
Damping	OFF	Offset	
Reject	OFF	Mode	
Rep. Rate	2.5 K		
Video/Filter	(+)		

SKETCH OF CALIBRATION BLOCK

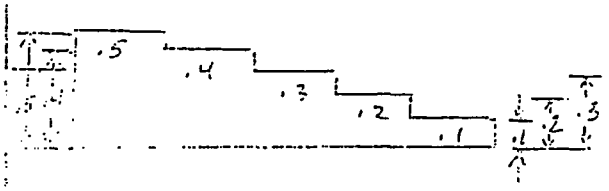

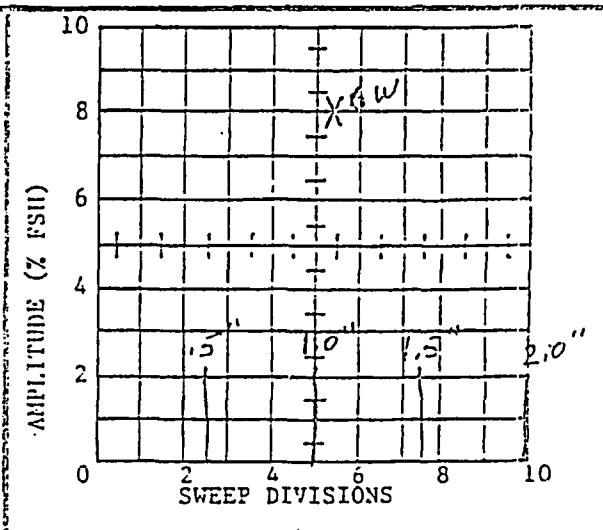

LR DAVIS	II				
EXAMINER LRD	LEVEL	EXAMINER NA	LEVEL NA	PAGE 1 OF 3	

7

NORTHERN STATES POWER COMPANY
POWER PRODUCTION DEPARTMENT

REPORT NUMBER:

ULTRASONIC THICKNESS MEASUREMENT REPORT

SYSTEM/COMPONENT: DRYWELL LINER	ISO. NO.: NA	WELD/PART NO.:	PLANT: MONTICELLO
UT INSTRUMENT: MFR NORTEC 131-D S/N 327	RECORDER: MFR - NA S/N NA		EXAM CO.: L-M-T
PROCEDURE: NO. NSP-UT-10 REV 3	SURFACE TEMP: 85° F	COUPLANT: LMT GEL 22087	WR OR WRA NO.:
MATERIAL: C/S	SIZE & THICKNESS: 1.0 NOM.	ENTRY SURFACE: OUTSIDE / INSIDE	CLAD / UNCLAD

DATE: 11 10 87
CAL CHECK TIMES:
START: 1421
FINISH: 1615

SEARCH UNITS	BEAM ANGLE	FREQ	WAVE MODE	TRANSDUCER MFR	SIZE	WEDGE MFR
S/N K04503	0°	5	LW	AEROTECH	.25	NA
S/N NA	NA	NA	NA	NA	NA	NA

CAL. REPORT NO	CAL. BLOCK	REFERENCE BLOCK
NA1	S/N 798705	S/N NA

POINT NO.	"T" READING	POINT NO.	"T" READING	POINT NO.	"T" READING	POINT NO.	"T" READING	POINT NO.	"T" READING
1	1.130	11	1.075	21	1.065				
2	1.090	12	1.080	22	1.075				
3	1.075	13	1.080						
4	1.085	14	1.085						
5	1.080	15	1.075						
6	1.085	16	1.080		NA		NA		NA
7	1.080	17	1.080						
8	1.090	18	1.080						
9	1.085	19	1.085						
10	1.085	20	1.080						

SKETCH AND ZONE NO. LOCATIONS

SEE ATTACHED SKETCH.

REMARKS: SEE ATTACHED

EXAMINER: [signature] II
Signature Level

ASST. EXAMINER: N A
Signature Level

CONTRACTOR REVIEW: [signature]

NSP REVIEW: [signature] 7/26/90 *

AUTHORIZED INSPECTOR: N/A

8

* R. I. NELSON WAS LEVEL III BY EXAMINATION 8/25/85 THRU 8/26/85.

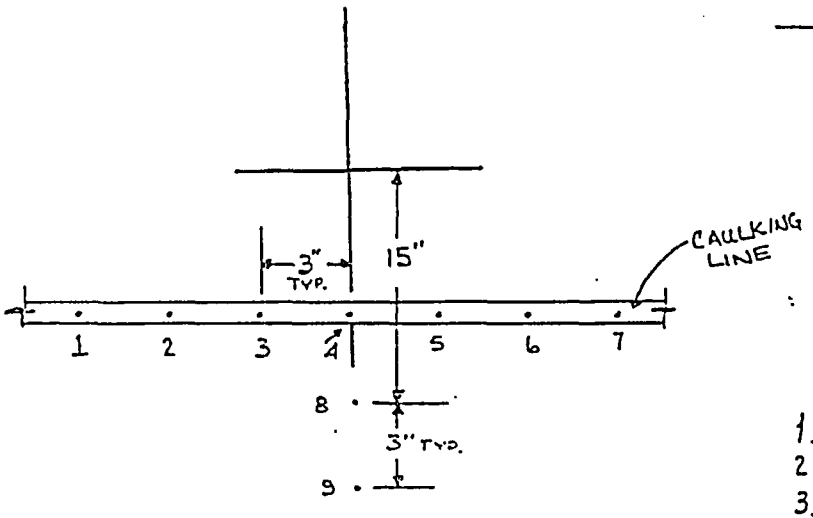

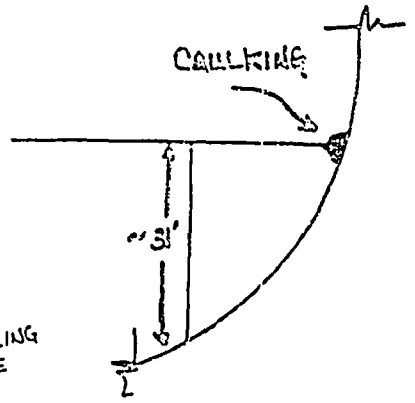

1	1.130
2	1.090
3	1.075
4	1.085
5	1.080
6	1.085
7	1.080
8	1.090
9	1.080
10	1.085
11	1.075
12	1.080
13	1.080
14	1.085
15	1.075
16	1.080
17	1.080
18	1.080
19	1.085
20	1.080
21	1.065
22	1.075

NOTE:

EXAMINED ENTIRE OPEN SURFACE FOR LOW SPOTS. MULTIPLE LAMINAR INDICATIONS WERE FOUND, WITH NO APPRECIABLE LOSS OF BACK REFLECTION LAMINARS RANGE IN DEPTH FROM .288" TO .905".