ATTACHMENT 2

C.D.I. Technical Note No. 05-04, "Quad Cities 2 New Dryer SMT Loads," Revision 5, dated April 2005, Non-Proprietary

Non-Proprietary

C.D.I. Technical Note No. 05-04

Quad Cities 2 New Dryer SMT Loads

Revision 5

Prepared by

Continuum Dynamics, Inc.
34 Lexington Avenue
Ewing, NJ 08618

Prepared under Purchase Order No. 00077969 for

Exelon Generation LLC
4300 Winfield Road
Warrenville, IL 60555

Approved by

Alan Bilanin

Alan J. Bilanin

April 2005

Rev 5

SUMMARY

The development of a replacement steam dryer by General Electric included measurements of the anticipated loads on the design in the Subscale Model Test (SMT) facility. These measured loads, at 32 locations on the new dryer and in the four main steam lines, are not of sufficient resolution to be used on a finite element structural model of the dryer. Using C.D.I. methodology documented in [1] and GE data, dryer loads were computed to a three-inch resolution. This technical note summarizes the approach taken to obtain the dryer loads from test data.

NEW DRYER DESIGN AND APPROACH

General Electric has developed a new dryer design (Figure 1) to replace the existing stream dryer at Quad Cities 1 and 2. This design, at subscale, was tested in the SMT facility (along with a subscale model of the existing dryer), and several sets of loads were obtained. These tests included:

1. A "blind" test with the existing steam dryer design, wherein the C.D.I. loads transfer methodology [1] was found by Exelon to give acceptable comparisons to pressure measurements not provided to C.D.I.;

2. Several tests on the existing steam dryer design, at various power levels, for comparison with full-scale measurements;

3. Several tests on the new steam dryer design, at various power levels, for comparison with the existing steam dryer design and a new dryer vulnerability test [2]; and

4. Re-examination of new dryer loads as a result of air flow re-calibration of the SMT.

LOADS TRANSFER APPROACH

In the absence of full-scale data on the new dryer, Continuum Dynamics, Inc. applied the current C.D.I. loads transfer methodology to the new dryer data [3] at simulated EPU conditions, based on the pressure time-histories at four locations on the subscale dryer, and then predicted the pressure loads across the entire dryer at this power setting. A comparison of the pressure levels at the provided pressure instrument locations on the new dryer is shown in Table 1. All of the nodal pressures are conservatively predicted, with the exception of the nodes on the top of the dryer. Nodal pressures are summarized in Figure 2 (converted to psid for comparison with previous full-scale predictions by a factor of 0.009425 psid full scale / pa subscale as provided by GE), and were supplied to Exelon in a high-resolution grid mesh result as schematically shown in Figure 3.

The loads predicted on the new dryer design (Figure 2) from SMT data are seen to be lower than the loads predicted on the original dryer design (Figure 4, from [4]) that were developed from in plant data.

REFERENCES

1. Continuum Dynamics, Inc. 2005. Methodology to Determine Unsteady Pressure Loading on Components in Reactor Steam Domes (Rev. 6). C.D.I. Report No. 04-09 (Proprietary).

2. Continuum Dynamics, Inc. 2005. Quad Cities 2 Vulnerability Loads. C.D.I. Technical Note No. 05-03.

3. Compact disc containing data delivered to C.D.I. on 15 February 2005 by Federal Express.

4. Continuum Dynamics, Inc. 2005. Revised Hydrodynamic Loads on Quad Cities Unit 2 Steam Dryer to 200 Hz, with Comparison to Dresden Unit 2 and Dresden Unit 3 Loads. C.D.I. Report No. 05-01.

Rev 5

Rev 5

Rev 5

Rev 5

Rev 5

Rev 5

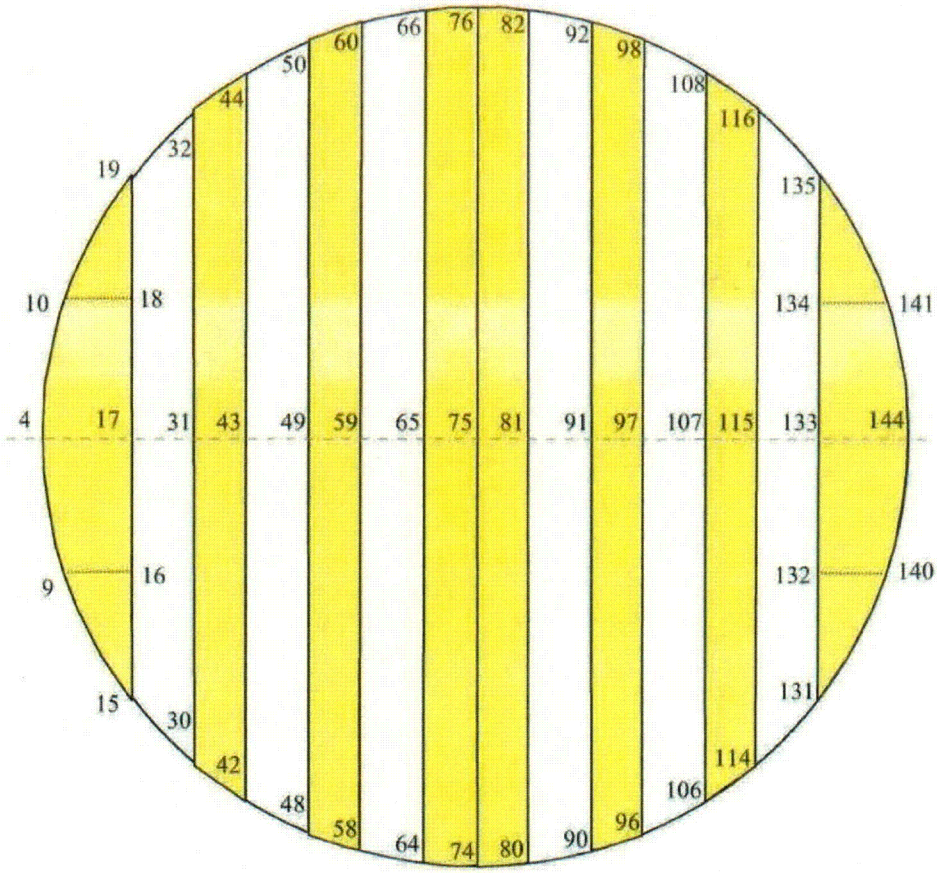

Figure 3a. Bottom plates pressure node locations, with pressures acting downward in the notation defined here.

C01

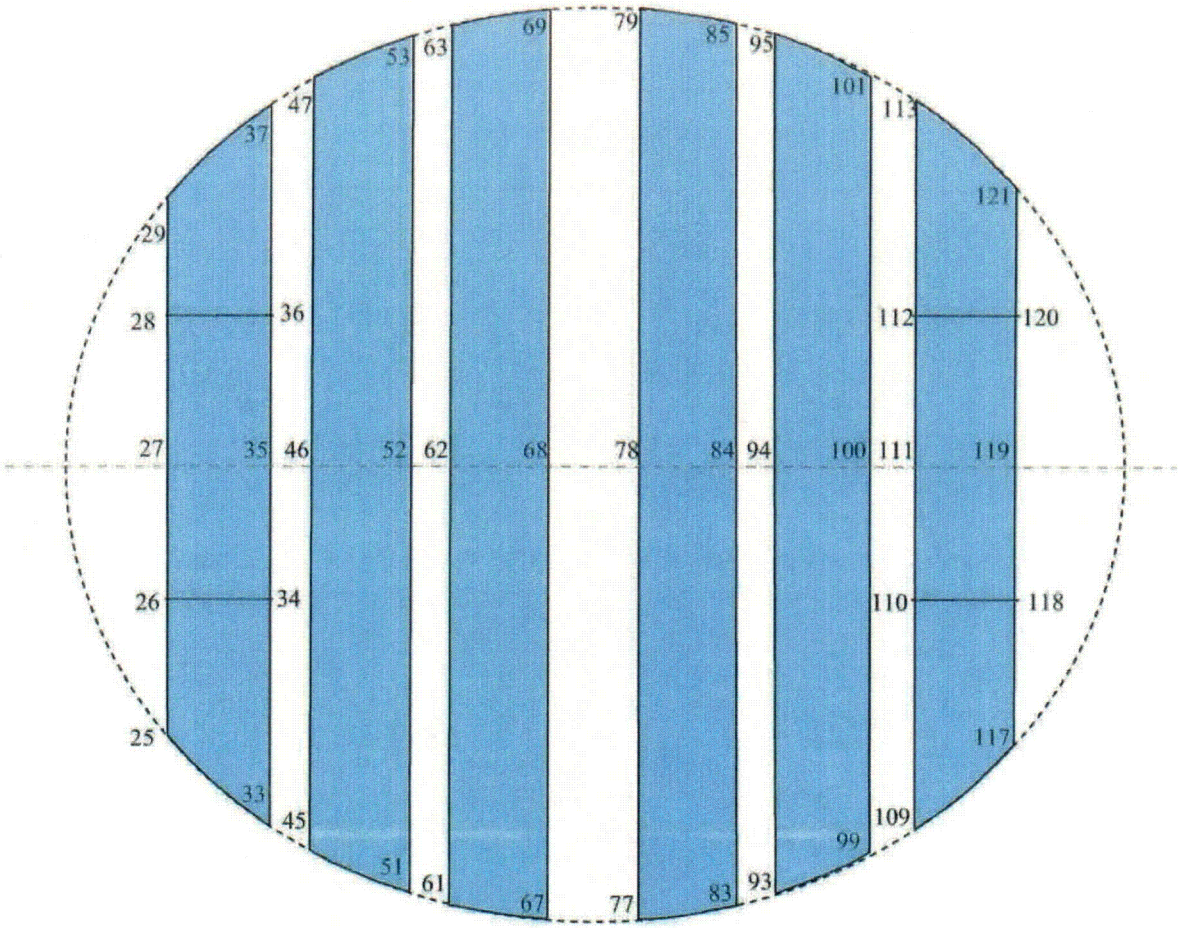

Figure 3b. Top plates pressure node locations, with pressures acting downward in the notation defined here.

C02

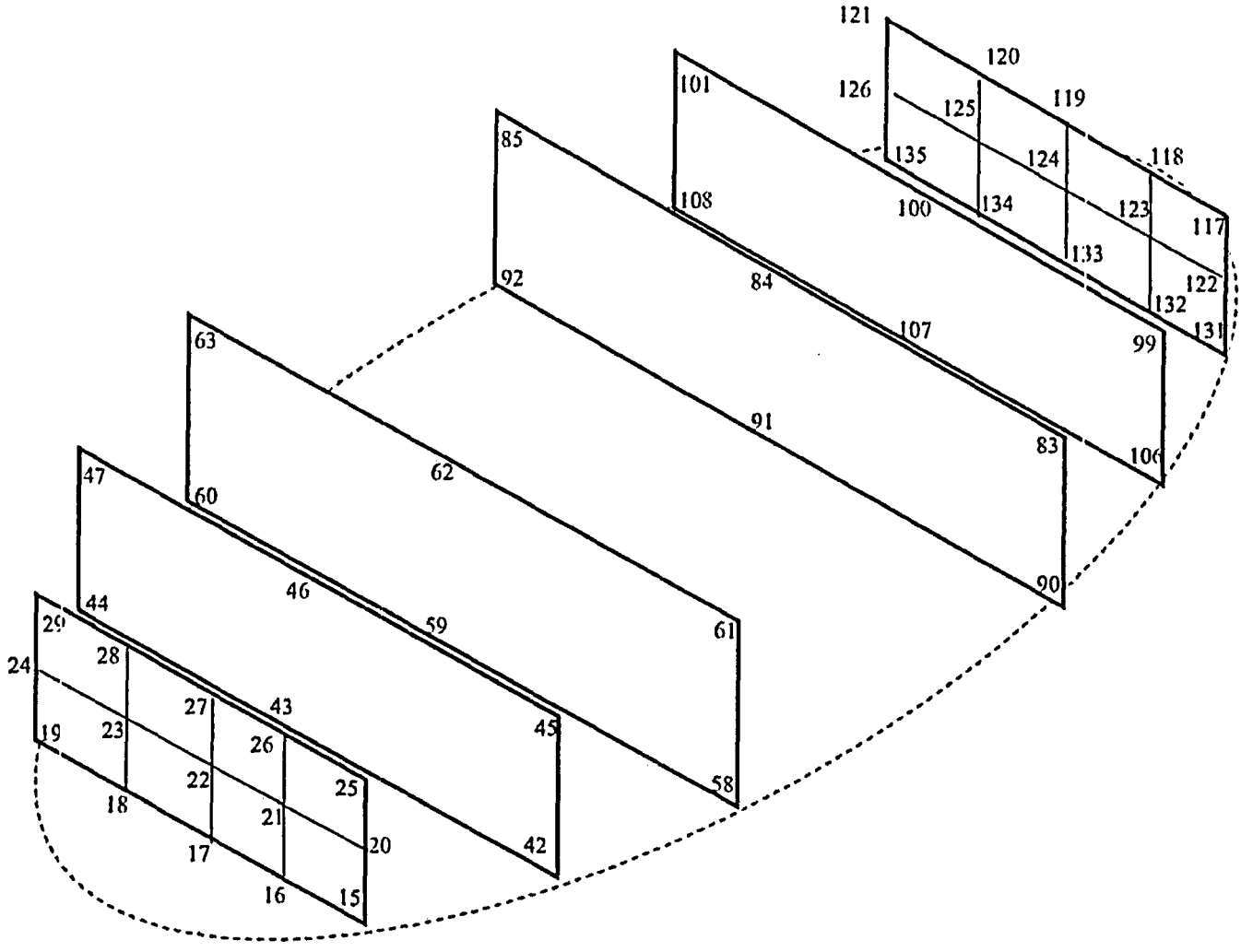

Figure 3c. Slanted plates: Pressures acting left to right on panels 15-29, 42-47, and 58-63; acting right to left on panels 83-85/90-92, 99-101/106-108, and 117-126/131-135. Note that the three panels on the left are actually slanted inward bottom left to top right, while the three panels on the right are slanted inward bottom right to top left.

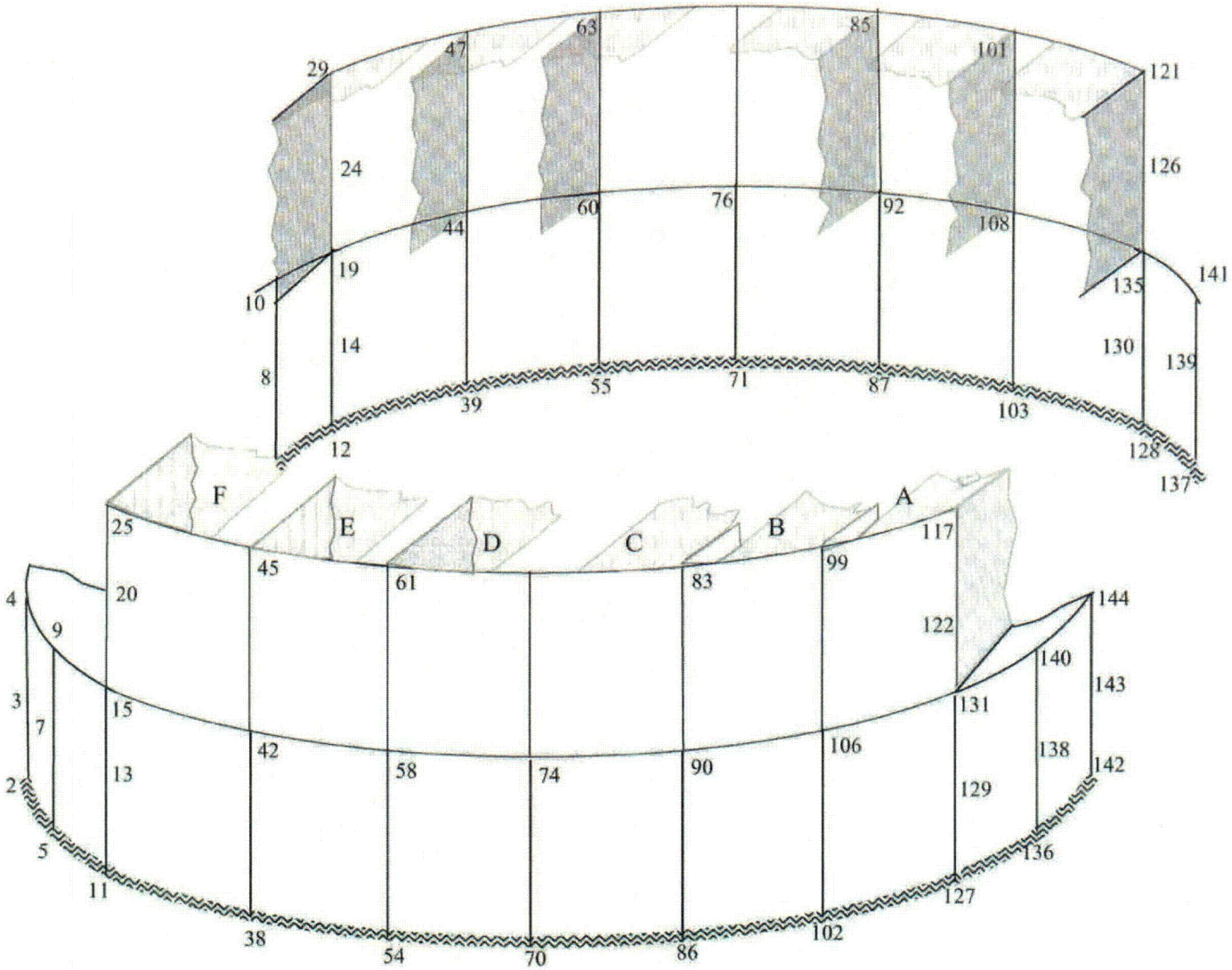

Figure 3d. Skirt plates: Pressure acting on the outer dryer 0/180 surfaces and the skirt. Note that the three panels on the left (above the plane of the cover plate) are actually slanted inward bottom left to top right, while the three panels on the right are slanted inward bottom right to top left.

C03

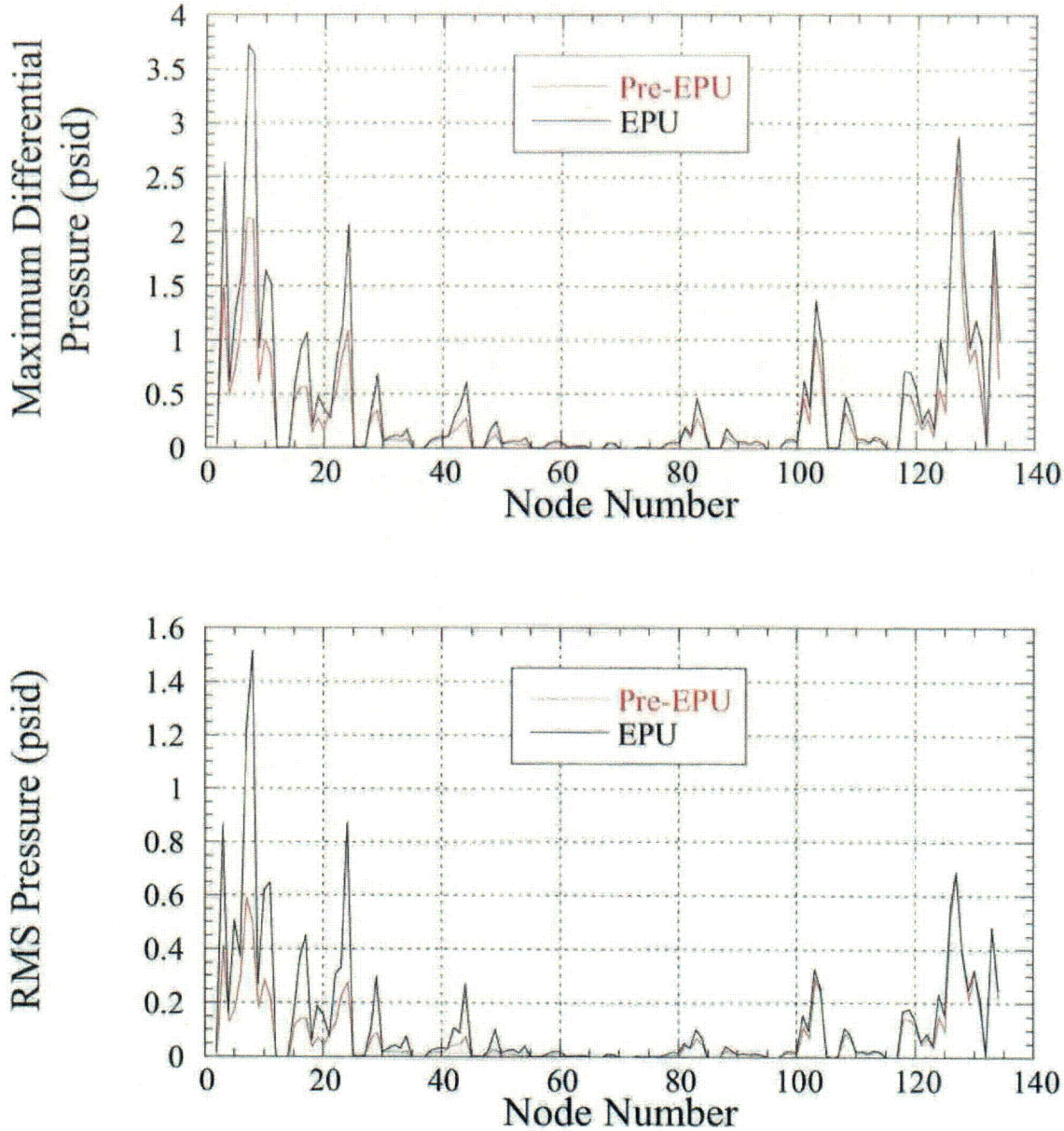

Figure 4. Pre-EPU and EPU loads on the original dryer as developed by C.D.I. methodology [4].

C04