MALLINCKRODT
NUCLEAR
CORPORATION

SAINT LOUIS 7, MISSOURI • U.S.A. • CENTRAL 1-8980

Plant
Hematite, Missouri

DOCKETED
USAEC
AUG 18 1960
Division of
Licensing & Regulation
Docket Officer

August 16, 1960

Mr. J. C. Delaney
Licensing Branch
Division of Licensing and Regulation
U. S. Atomic Energy Commission
Washington 25, D. C.

SUBJECT: Extension of SNM-33 to include a Bird Cage for Eight Inch Diameter UF_6 Cylinder

REFERENCE: Our Letter of July 8, 1960, Subject as Above

Gentlemen:

Enclosed are sketches SK 7, 7-1, and 9 which should complete the information you require in order to approve the subject request for extension of SNM-33.

The eight inch UF_6 cylinder will be mounted in the bird cage with the valve end down. The valve cover will be enclosed in the bottom support as shown on SK 7-1. Lateral movement of the cylinder on the bottom support will be prevented by the 1/4" bar added to the bottom support as shown on SK 7-1.

Lateral movement of the cylinder at the top will be prevented by the angle iron bracket shown on SK 7. This bracket consists of two parts. Each part is hinged to the existing framework so that it may be swung out of the way when the larger MD cylinder is shipped.

Finally the cylinder is held down in the same manner depicted in the detail titled "Cylinder Securing Device" shown on MCW 3226-3. The only modification necessary is the addition of two 12½ inch long bolts as shown on SK 7-1 with their location shown on SK 7. The existing 6½ inch long bolts will remain for anchoring the MD cylinders.

Cy. sent to Compl. 8/19/60

J-51

To facilitate loading and unloading the eight inch cylinder, the top angle on the front side of the bird cage will be removed. This angle will then be used as additional bracing as shown on SK 9.

Please do not hesitate to call collect should you require additional information prior to approving the requested extension of SNM-33.

Respectfully yours,

MALLINCKRODT NUCLEAR CORPORATION

L. J. Swallow

L. J. Swallow
Hematite Plant

LJS/jrt

Enc. (3)

cc: AEC (7)

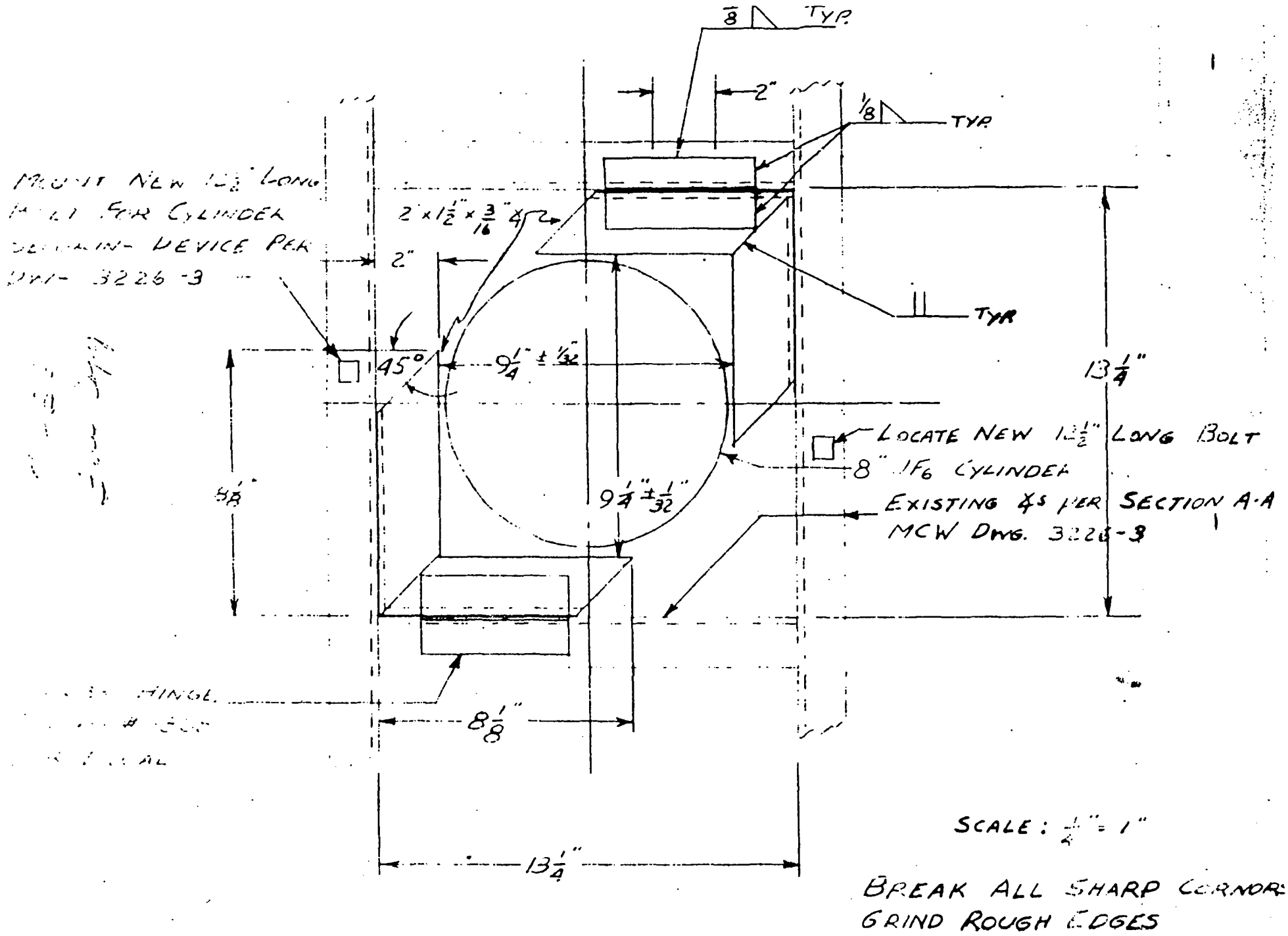
8 TYP.
2"
1/8 TYP.
MOUNT NEW 1½" LONG BOLT FOR CYLINDER DETAIN- DEVICE PER DWG- 3226-3
2 x 1½" x 3/16" ∡s
2"
TYP.
45°
9¼" ± 1/32"
13¼"
LOCATE NEW 1½" LONG BOLT
8" UF6 CYLINDER
EXISTING ∡s PER SECTION A-A
MCW DWG. 3226-3
9¼" ± 1/32"
8⅛"
8⅛"
13¼"
SCALE: ¼" = 1"
BREAK ALL SHARP CORNERS
GRIND ROUGH EDGES

SCALE: $\frac{1}{4}$

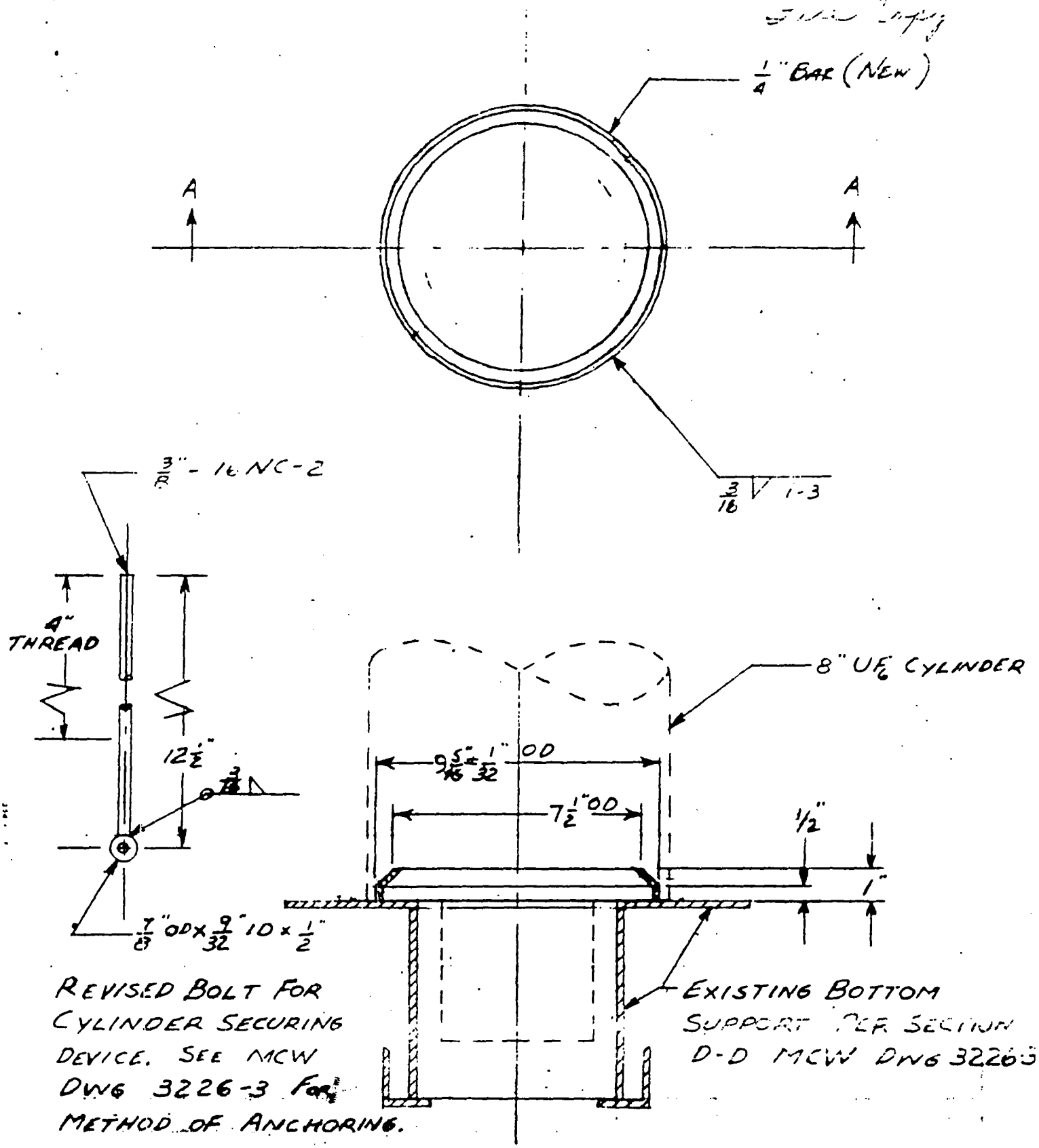

SECTION A-A

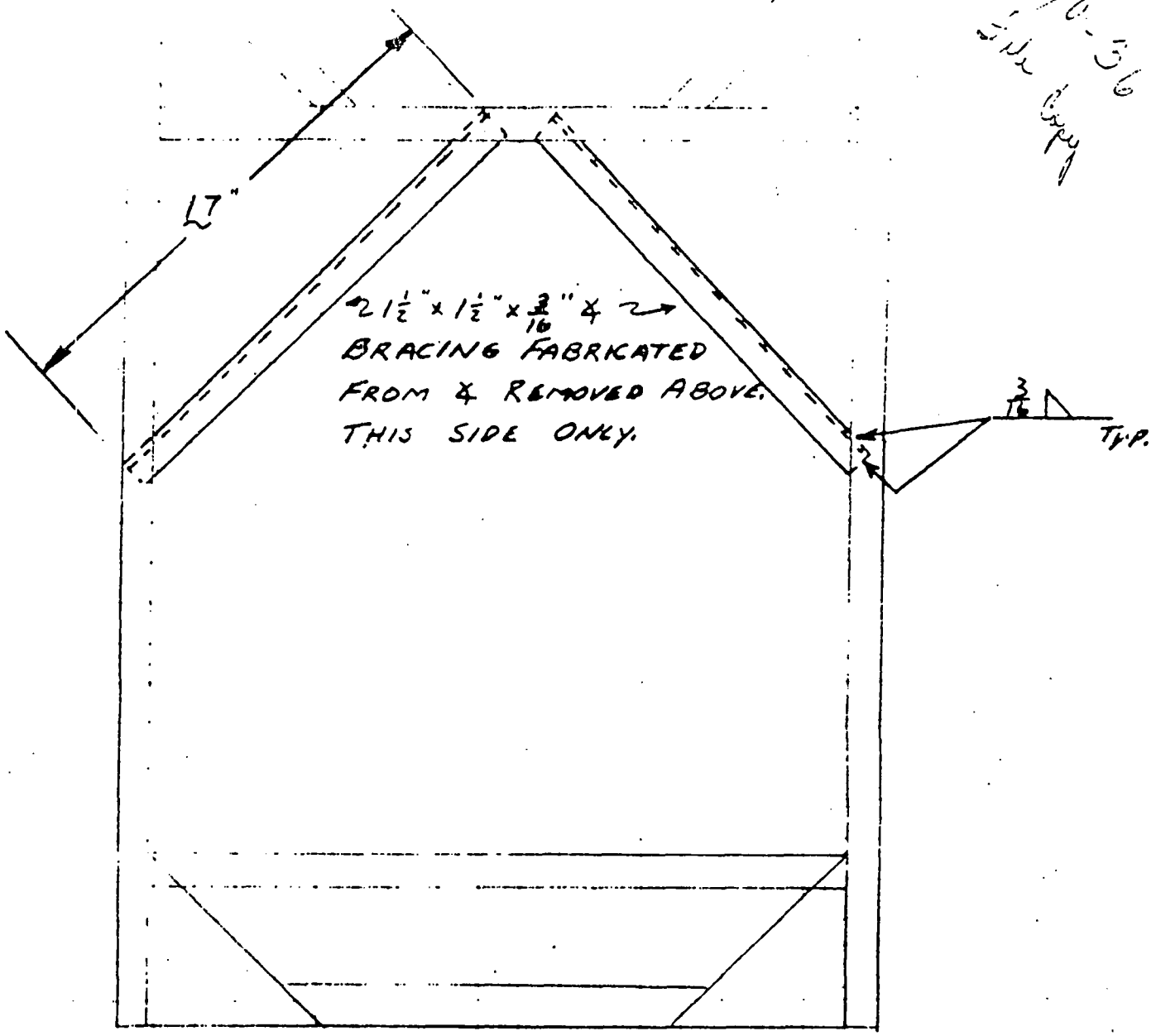

PARTIAL FRONT VIEW PER MCW

DRAWING 3226-3