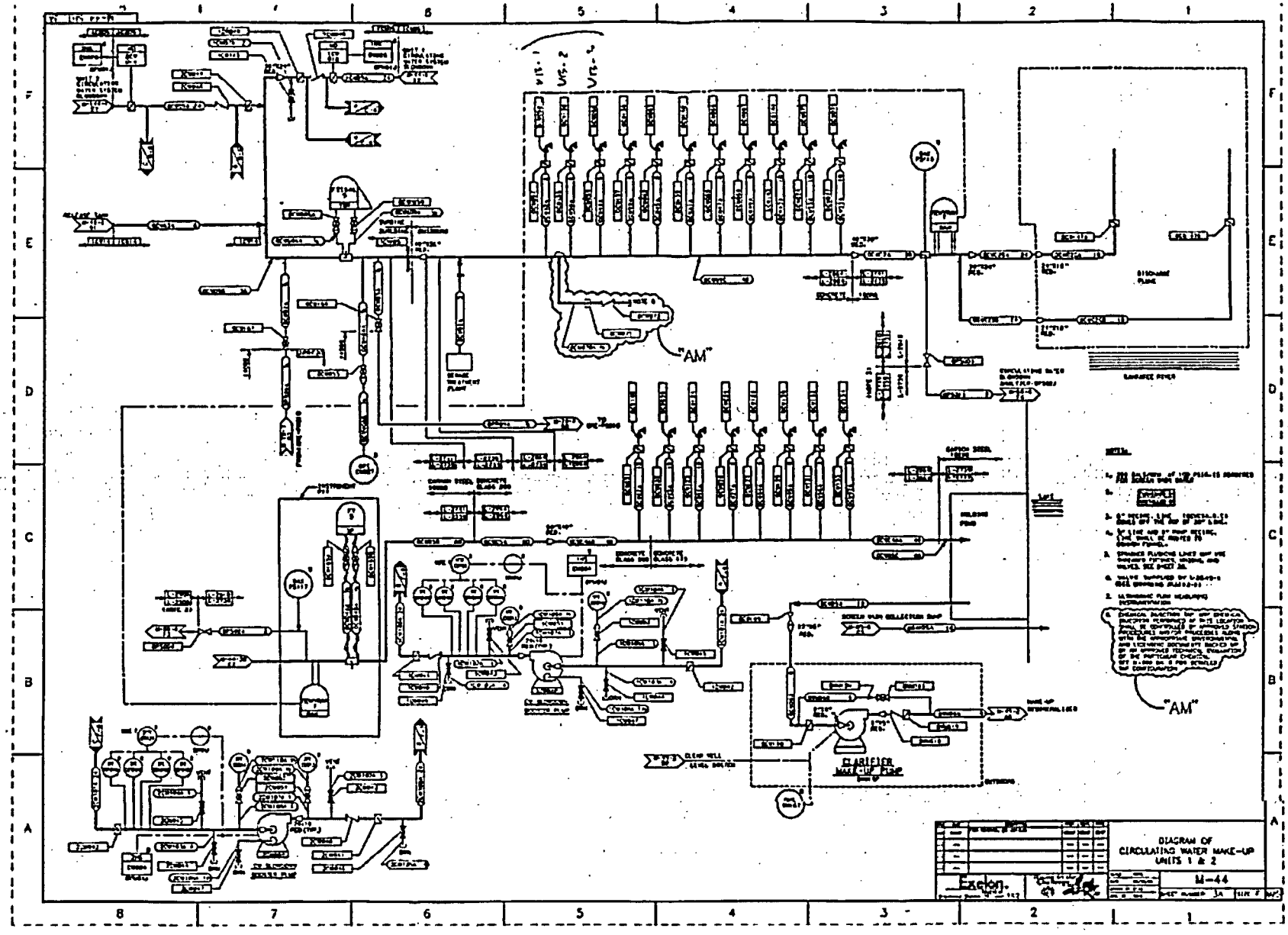
"AM"
"AM"
CLARIFIER MAKE-UP PUMP
DIAGRAM OF CIRCULATING WATER MAKE-UP UNITS 1 & 2
M-44
Exelon.