GE Energy

David H. Hinds
Manager, ESBWR

PO Box 780 M/C L60
Wilmington, NC 28402-0780
USA

T 910 675 6363
F 910 362 6363
david.hinds@ge.com

MFN 06-076

Docket No. 52-010

March 27, 2006

U.S. Nuclear Regulatory Commission
Document Control Desk
Washington, D.C. 20555-0001

Subject: **ESBWR SLC Injection Inside the RPV**

A NRC/GE conference call regarding TRACG Stability/ATWS was held on February 23, 2006. During this call, GE agreed, for the immediate term, to provide the NRC with simplified diagrams prepared for the SBWR showing how flow is achieved during SLC injection. These diagrams are contained in Enclosure 1 and are provided for information only. For the longer term, a diagram specific to the ESBWR will be prepared in response to NRC RAIs.

Please also refer to page 2.4-20 of NEDC-33084P, Revision 1, transmitted via the Referenced letter.

If you have any questions about the information provided here, please let me know.

Sincerely,

for

David H. Hinds
Manager, ESBWR

D068

Enclosure:

- Simplified Diagrams prepared for SBWR showing how flow is achieved during SLC Injection

Reference:

MFN 03-055, Letter from Atambir S. Rao to U. S. Nuclear Regulatory Commission, *ESBWR Design Description, NEDC-33084P – Revision 1,* August 8, 2003

cc: WD Beckner USNRC (w/o enclosures)
AE Cubbage USNRC (with enclosures)
LA Dudes USNRC (w/o enclosures)
GB Stramback GE/San Jose (with enclosures)

ESBWR SLC Injection inside the RPV

There are two 50% SLC trains A & B.

SLC injection piping (2 in. dia.) leads downward from each RPV nozzle inside the reactor down comer region (outside the core shroud) to a supply header. The supply headers are attached to the shroud.

Each header is connected to two down comers (1 in. dia.).

Each down comer includes 4 nozzles with a total of eight injection nozzles per each SLC train.

Each nozzle penetrates the shroud and shall be provided with two holes (1/4 in. dia.) that discharge the Sodium Pentaborate Solution into the core.

These injection nozzles are shaped and sized to jet the poison solution at high velocity into the core bypass region.

This arrangement, together with a high nozzle injection velocity, assures proper distribution of the SPBS within the core bypass region.

Jetting action results in excellent mixing of the liquid poison with water present in the core bypass region.

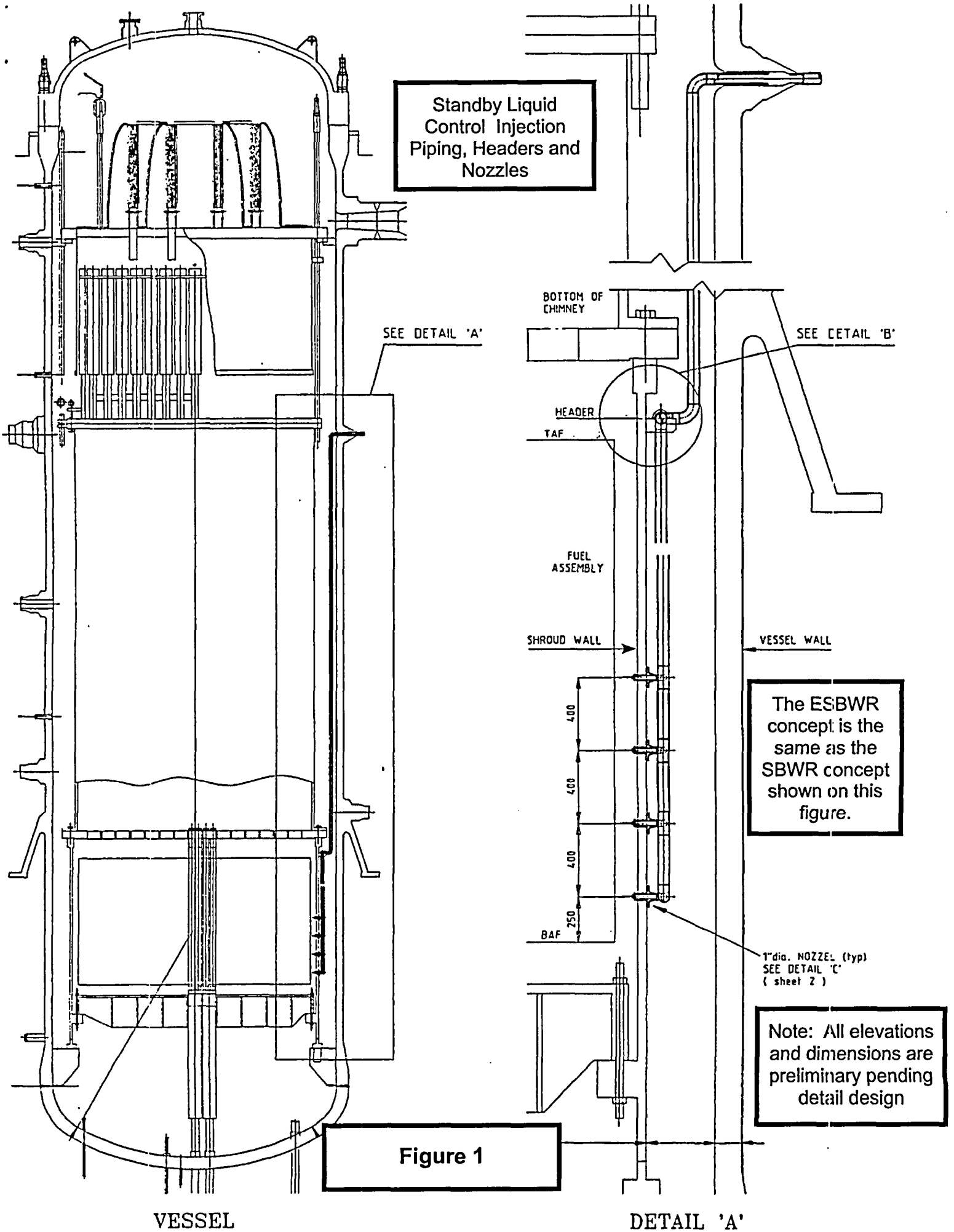
Standby Liquid Control Injection Piping, Headers and Nozzles
SEE DETAIL 'A'
BOTTOM OF CHIMNEY
SEE DETAIL 'B'
HEADER
TAF
FUEL ASSEMBLY
SHROUD WALL
VESSEL WALL
400
400
400
250
BAF
1"dia. NOZZEL (typ)
SEE DETAIL 'C'
(sheet 2)
The ESBWR concept is the same as the SBWR concept shown on this figure.
Note: All elevations and dimensions are preliminary pending detail design
VESSEL
DETAIL 'A'

Figure 1

Standby Liquid Control Injection Piping, Headers and Nozzles

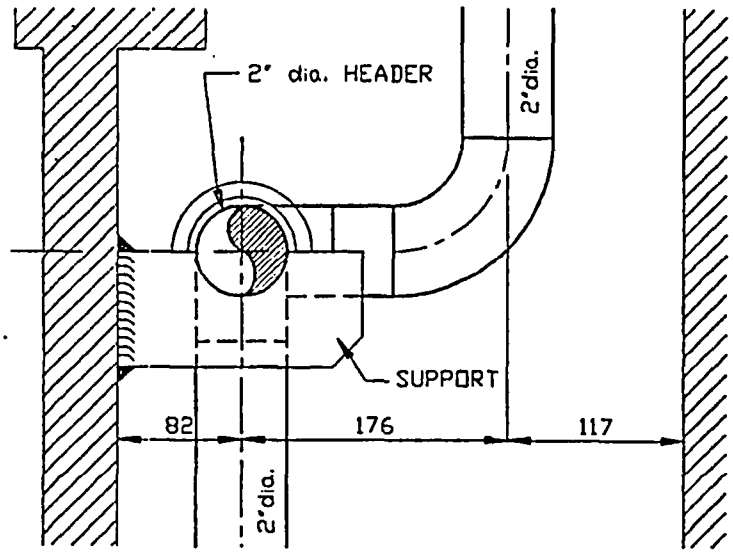

DETAIL 'B'
scale 1:5

For SBWR, there is only one accumulator and this ring header goes all around the shroud (see Figure 3). For ESBWR, there are two accumulators and two headers that each go one quarter of the circumference around the shroud with elbows going down to the shroud penetrations at each end of the header (see Figure 5).

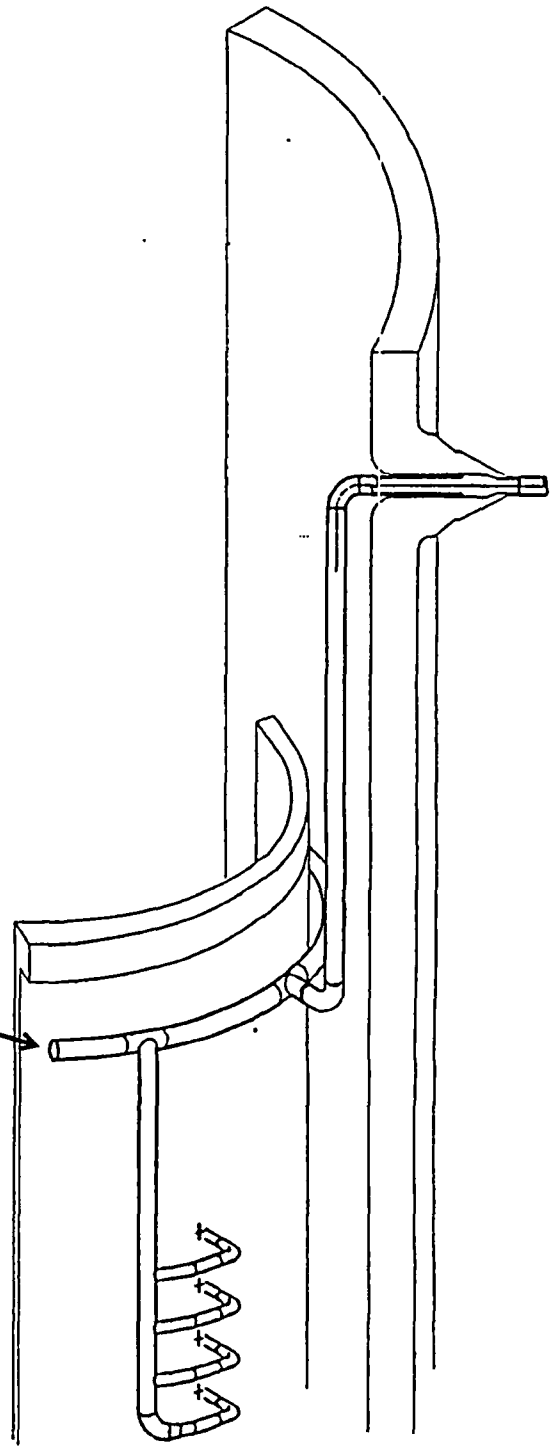

ISOMETRIC VIEW
not to scale

Note: All elevations and dimensions are preliminary pending detail design

Figure 2

Standby Liquid Control Injection Piping, Headers and Nozzles

This is the SBWR configuration with a single header running horizontally around the periphery of the core shroud.

See Figure 5 for ESBWR Configuration.

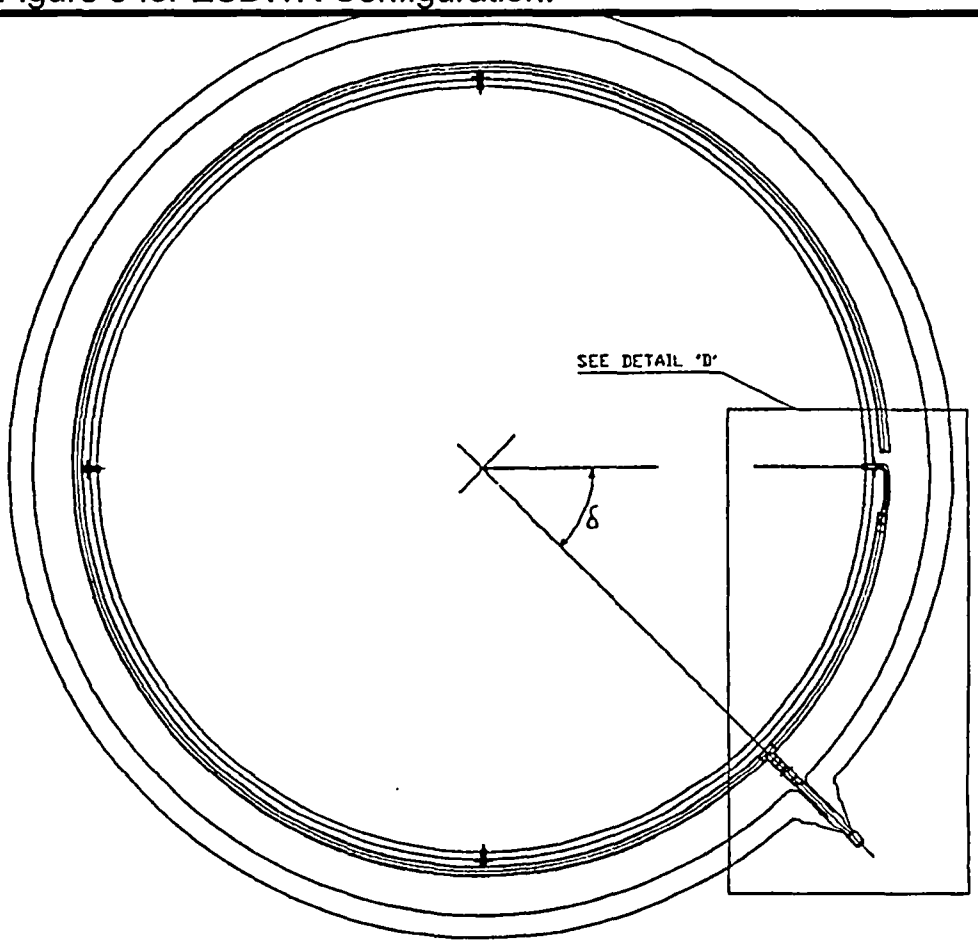

CROSS SECTIONAL PLAN THRO' VESSEL
scale 1:50

Note: All elevations and dimensions are preliminary pending detail design

Figure 3

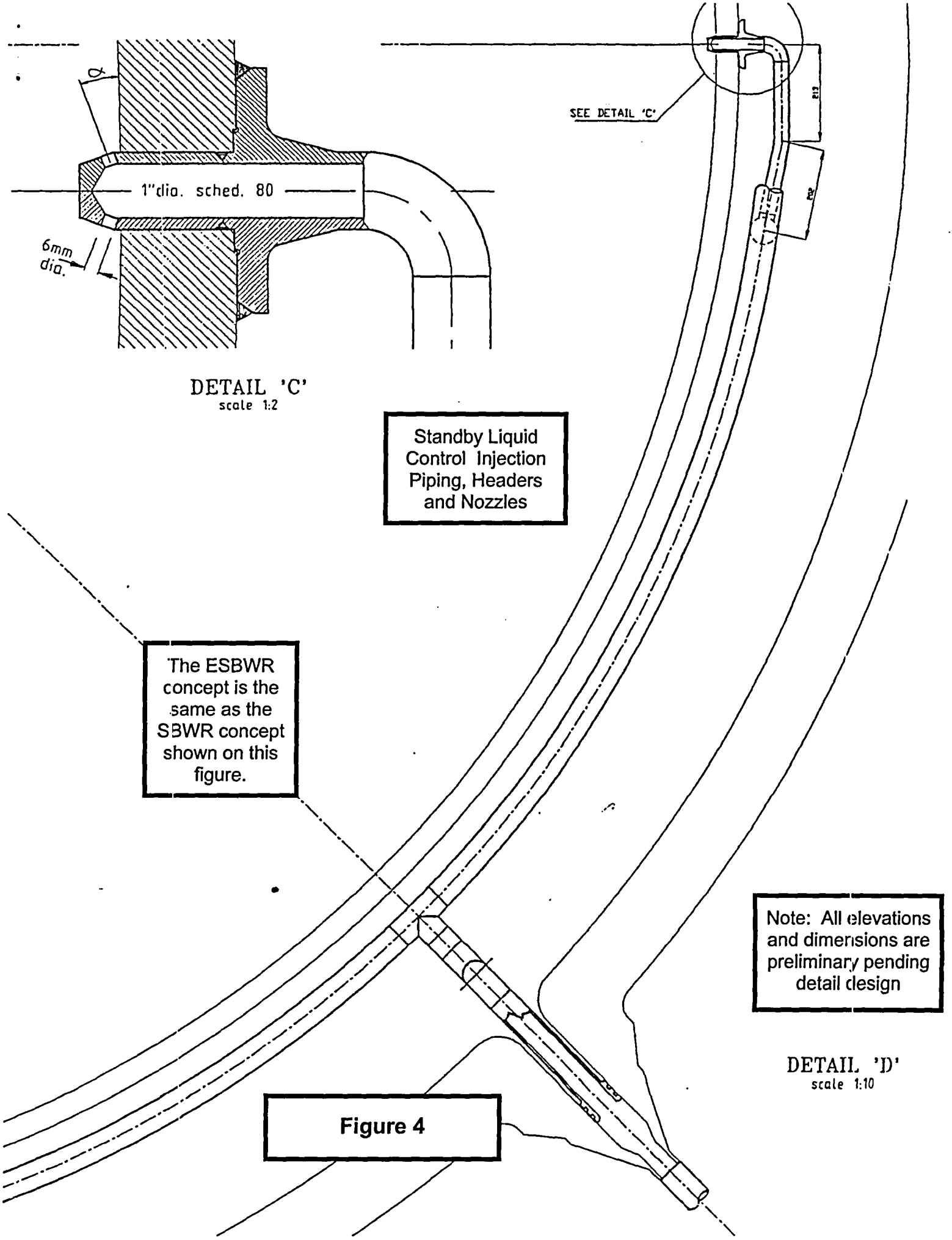
1"dia. sched. 80
6mm dia.
DETAIL 'C'
scale 1:2
SEE DETAIL 'C'
Standby Liquid Control Injection Piping, Headers and Nozzles
The ESBWR concept is the same as the SBWR concept shown on this figure.
Note: All elevations and dimensions are preliminary pending detail design
DETAIL 'D'
scale 1:10

Figure 4

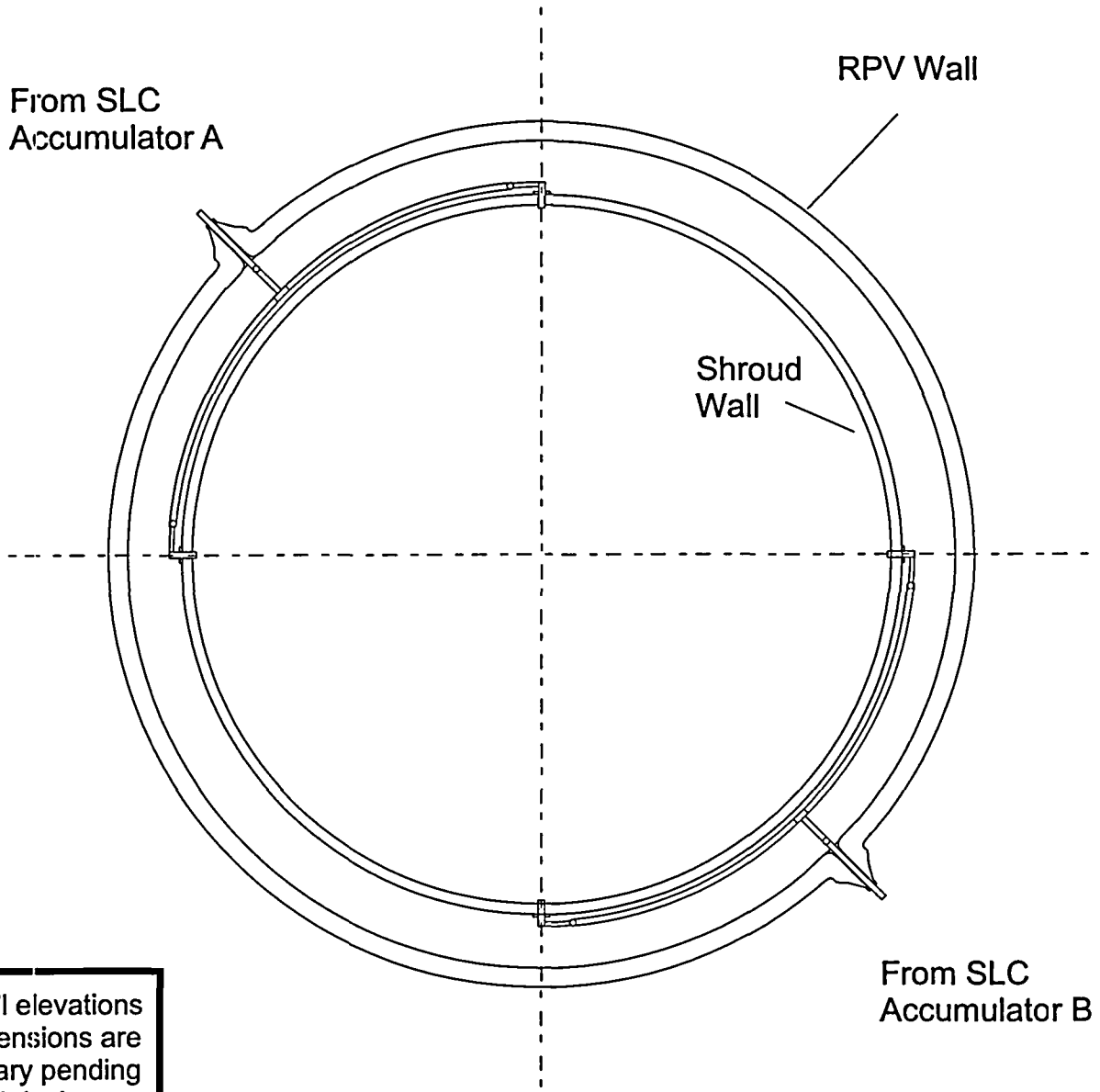

Note: All elevations and dimensions are preliminary pending detail design

ESBWR SLC Header Arrangement
16 Injection Nozzles at Four Elevations
and Four Azimuthal Positions

Figure 5