WOLF CREEK
NUCLEAR OPERATING CORPORATION

Terry J. Garrett
Vice President Engineering

March 15, 2006

ET 06-0013

U. S. Nuclear Regulatory Commission
ATTN: Document Control Desk
Washington, DC 20555

Reference: Letter ET 05-0008, dated August 23, 2005, from T. J. Garrett, WCNOC, to USNRC

Subject: Docket 50-482: Withdrawal and Resubmittal of 10 CFR 50.55a Request 3PR-04 for the Third Ten-Year Interval Inservice Testing (IST) Program

Gentlemen:

The purpose of this submittal is to withdraw Wolf Creek Nuclear Operating Corporation (WCNOC) 10 CFR 50.55a Request 3PR-04, previously submitted by Letter ET 05-0008 (referenced above), and submit a new 10 CFR 50.55a Request 3PR-04 for the same components.

Pursuant to 10 CFR 50.55a(a)(3)(ii), WCNOC hereby requests NRC approval of the following 10 CFR 50.55a Request (Attachment 2) for the Third Ten-Year Interval Inservice Testing (IST) Program, which began on September 4, 2005.

Attachment 2 provides the new 10 CFR 50.55a Request 3PR-04. It requests a one-time extension of the ASME OM Code ISTB-3400, "Frequency of Inservice Tests," as it pertains to the Containment Spray Pump Biennial Comprehensive Test, on the basis that compliance with the specified requirement of this section would result in hardship or unusual difficulty without a compensating increase in the level of quality and safety.

WCNOC requests approval of 10 CFR 50.55a Request 3PR-04 by September 1, 2006, so that WCNOC will know if an alternative to the request will need to be taken for Refuel (RF) 15, which is scheduled to start on October 7, 2006.

Attachment 1 contains a list of commitments.

A047

If you have any questions, please contact me at (620) 364-4084 or Mr. Kevin Moles at (620) 364-4126.

Sincerely,

Terry J. Garrett

TJG/rlt

Attachment 1: List of Commitments
Attachment 2: 10 CFR 50.55a Request Number 3PR-04

cc: J. N. Donohew (NRC), w/a
W. B. Jones (NRC), w/a
B. S. Mallett (NRC), w/a
Senior Resident Inspector (NRC), w/a

LIST OF COMMITMENTS

The following table identifies those actions committed to by WCNOC in this document. Any other statements in this submittal are provided for information purposes and are not considered to be commitments. Please direct questions regarding these commitments to Mr. Kevin Moles at (620) 364-4126.

COMMITMENT	Due Date/Event
WCNOC will continue to perform full frequency spectrum vibration analysis and hydraulic testing at approximately 300 gpm of the containment spray pumps on a quarterly basis.	Until containment spray pump biennial comprehensive tests can be performed during Refueling Outage 16.

Attachment 2 – 10 CFR 50.55a Request No. 3PR-04

10 CFR 50.55a Request Number 3PR-04

Containment Spray Pump Comprehensive Test

Proposed Alternative
In Accordance with 10 CFR 50.55a(a)(3)(ii)

Hardship or Unusual Difficulty Without Compensating Increase in Level of Quality or Safety

1. ASME Code Component(s) Affected

PEN01A	Containment Spray Pump "A"
PEN01B	Containment Spray Pump "B"

2. Applicable Code Edition and Addenda

ASME OM Code 1998 Edition through 2000 Addenda

3. Applicable Code Requirement

An alternative is requested to the following ASME OM Code requirement for comprehensive testing of Containment Spray Pumps "A" and "B":

- ISTB-3400, "Frequency of Inservice Tests" – An inservice test shall be run on each pump as specified in Table ISTB-3400-1, "Inservice Test Frequency," which requires the comprehensive test to be run biennially.

4. Reason for Request

Pursuant to 10 CFR 50.55a, "Codes and Standards", paragraph (a)(3)(ii), one-time relief is requested from the requirement of ASME OM Code ISTB-3400 to perform a Comprehensive Test for Containment Spray Pumps "A" and "B" biennially. Specifically, it is requested that the due date of September 4, 2007 for the performance of the comprehensive pump test be extended to the end of Wolf Creek Generating Station (WCGS) Refueling Outage 16, which at this time is scheduled to start on March 22, 2008 and end on April 23, 2008. The basis of the request is that compliance with the specified requirement of this section would result in hardship or unusual difficulty without a compensating increase in the level of quality and safety.

ASME OM Code ISTB-3300(e)(1) specifies that the comprehensive testing of the subject pumps be conducted at ±20% of pump design flow rate. This cannot be achieved for the subject pumps due to the design of the system. Therefore, a modification to the existing system design is required to achieve the minimum flow requirement. Time is needed to properly perform the design analyses associated with the modification, obtain the materials needed to implement the modification, and plan the field implementation of the modification.

WCGS was a pilot plant under the Westinghouse Owners Group (WOG) to demonstrate the implementation of regulation 10 CFR 50.69 using the guidance of the draft NEI 00-04, "10 CFR 50.69 SSC Categorization Guideline." The Containment Spray System was one of the two systems chosen for demonstration of the WCGS pilot plant effort. Wolf Creek Nuclear Operating Corporation (WCNOC) is reviewing the final draft of the WOG report and evaluating the feasibility of implementing 10 CFR 50.69. The intent of 50.69 is to provide a means for appropriately focusing attention on those structures, systems and components (SSCs) that are most important to safety, while maintaining a high degree of confidence that all SSCs will be capable of performing their design basis functions. To achieve this, 50.69 permits relaxation of the special treatment (controls) specified in certain other sections of the regulations for those SSCs that can be categorized as low safety significant.

5. Proposed Alternative and Basis for Use

It is requested that the due date of September 4, 2007 for the performance of the comprehensive pump test for Containment Spray Pumps "A" and "B" be extended to the end of WCGS Refueling Outage 16, which at this time is scheduled to start on March 22, 2008 and end on April 23, 2008.

Background

WCGS's third 120-month interval for pump and valve inservice testing began on September 4, 2005, and adopted ASME OM Code 1998 Edition through 2000 Addenda. The previous 120-month interval utilized the ASME Section XI 1989 Edition that did not require "comprehensive testing" of pumps at ±20% of pump design flow rate biennially (ISTB-3400/Table ISTB-3400-1).

The containment spray pumps are vertically mounted centrifugal pumps driven by an electric motor driver and manufactured by the Ingersoll-Rand Company. During normal power operations the pumps are in the standby mode. The safety function of the containment spray pump is to pump water from the refueling water storage tank into the containment atmosphere under conditions requiring system actuation and to pump water from the containment sump to the containment atmosphere after injection, when flow from the refueling water storage tank has been terminated. This function, in conjunction with the containment fan cooler system and the emergency core cooling system, maintains containment pressure below the containment design pressure during pressure transients following a loss of coolant accident or main steam line break inside containment. The containment spray system is actuated by the coincidence of two-out-of-four HI-3 containment pressure signals or manually on the Main Control Board.

Each containment spray pump was originally designed to deliver 3,165 gallons per minute (gpm) into the containment atmosphere during the injection phase, and 3,750 gpm during recirculation mode. However, the design parameters for the WCGS containment analysis have been revised and now require each containment spray pump to deliver 3,086 gpm and 3,615 gpm during injection and recirculation modes, respectively.

The piping design of the Containment Spray System is such that the test loop for the pump consists of a 10 inch discharge line which separates into a 4-inch test recirculation

line returning to the refueling water storage tank, as shown by Figure 1, "Containment Spray Pump Test Flow Diagram." The test recirculation line is sized to accommodate approximately 10% of the pump design flow rate. The 10-inch discharge line terminates inside containment at the spray nozzle headers in the top of containment. Testing of the pump near the design recirculation flow of 3,615 gpm would require flow through the 10-inch discharge line instead of the 4-inch test recirculation line since the smaller line will not allow this flow rate. However, flowing through the 10-inch discharge line would result in the wetting of containment with borated water.

Test Data/Pump Performance Monitoring

During preoperational testing conducted in 1984, both containment spray pumps were full flow tested. Refer to Figure 1 for the system test flow diagram. A temporary test loop was constructed by installing temporary piping from the discharge piping (EN-V078 and EN-V082) to the recirculation sump suction piping inside containment. In this configuration each pump was operated to demonstrate that the maximum design flow requirement of 3,750 gpm could be met. As previously stated, a re-analysis of required flows determined that a lower flow rate of 3,615 gpm is actually needed, so the preoperational testing demonstrated a flow margin of 135 gpm when this change is taken into consideration.

The flow-limiting orifice in the containment spray pump 4-inch test line, which returns flow to the refueling water storage tank, was removed for a pump test that was conducted on November 2, 2005, to determine the maximum flow rate that could be achieved in this configuration. Figure 2 provides the Containment Spray Pump Characteristic Curve with the flow rate results of this test, including the quarterly hydraulic flow test requirements (300 gpm).

The test yielded the following results:

- Gallons Per Minute Maximum: 1,387 gpm
- Dynamic Suction Pressure: 31.6 psig (73 feet-head)
- Dynamic Discharge Pressure: 255.0 psig (589 feet-head)
- Differential Pressure: 223.4 psid (516 feet-head)

The vibration spectrum for the pump was reviewed by the lead vibration analyst and verified to be within expected performance parameters. The hydraulic performance results were compared to the certified pump curve test results originally developed for the installed pump and were found to yield consistent results (Reference Figure 2).

The Predictive Maintenance Program performs full frequency spectrum vibration analysis each quarter with the collected data consistently being below 0.325 in/sec in all cases. This analysis goes beyond the vibration analysis required by the ASME Code and is superior in detecting precursors to pump failures when compared to the simple vibration amplitude measurement technique. Additionally, the Preventive Maintenance Program also requires periodic oil analysis of the containment spray pump motors. This aspect of performance testing will reveal mechanical degradation in the pump's driver.

Based on the preventive maintenance results, quarterly full frequency spectrum vibration analysis, and quarterly hydraulic testing at approximately 300 gpm, an accurate

assessment of pump health and operational readiness is determined. This testing and analysis will continue to be implemented on a quarterly basis. This provides reasonable assurance that the pumps are capable of performing their intended design function.

Safety Significance

The safety significance of the containment spray function is an important consideration for this request. WCGS's containment building is of the large, dry design. The internal free volume is approximately 2.5 million cubic feet with an internal design basis pressure of 60 psig. A Containment Ultimate Strength Analysis, performed by Bechtel Corporation in support of the Individual Plant Examination for WCGS, determined that containment is significantly more robust than indicated by the internal design basis pressure. For example, the minimum median or a typical value of the overall containment building ultimate pressure capacity is 122 psig (2.03 times the internal design basis pressure). The 5% lower bound of the overall containment building ultimate pressure capacity is 99 psig (1.65 times the internal design basis pressure). A consequence of the robust containment design is that the WCGS large early release frequency (LERF) is dominated by containment bypass events. Steam generator tube rupture and interfacing system loss of coolant accident core damage events account for over 95 percent of the baseline WCGS LERF. As a result, the containment spray system has low safety significance in the Wolf Creek Probabilistic Risk Assessment.

WCGS's 10 CFR 50.65 Maintenance Rule Program defines four separate functions associated with the containment spray system. Of these four functions, two are designated "Low Safety Significant" and two are designated "High Safety Significant". The only functions applicable to the containment spray function are the two designated as Low Safety Significant. The two High Safety Significant functions pertain to containment isolation and residual heat removal recirculation capability.

An Integrated Decision-Making Panel reviewed the Containment Spray System's function consistent with the methods described by the April 2004 draft of NEI 00-04. This review was conducted by WCNOC as part of a pilot plant effort to demonstrate the process used for 10 CFR 50.69 implementation. This review concluded that the active function of the Containment Spray System to provide a spray of borated water to the upper regions of the containment to reduce the containment pressure and temperature in conjunction with the containment fan cooler system and the emergency core cooling system met the criteria for a RISC-3 classification. The active functions of the containment spray pumps do not impact defense-in-depth with respect to maintaining the function of containment as a barrier to the release, retention and removal of fission products.

Conclusion

Hardship and unusual difficulty would be incurred by testing at or near design flow rates prior to Refueling Outage 16. Substantial flow can only be achieved through the 10-inch discharge line without modification, which ultimately requires flow through containment spray nozzles. Temporary modifications to install a test return line capable of passing pump design flow would be highly labor intensive and could only be performed during refueling outages. A number of personnel safety issues, seismic concerns, fire barrier considerations and configuration control concerns are raised by the use of temporary

modifications to accomplish the necessary flow rate. This temporary modification will interfere with refueling activities and has a high potential to extend outage durations. Biennial testing as described by the ASME OM Code requires a permanent modification to the Containment Spray piping system.

The active function of the containment spray pumps meets the criteria for a low safety significant component in the WCNOC Maintenance Rule Program and also met the criteria for a RISC-3 component as determined by the WCNOC 10 CFR 50.69 pilot project. Compliance with the requirements of OM Code ISTB-3400 to meet the comprehensive test frequency for the initial test would result in hardship and unusual difficulty without a compensating increase in the level of quality and safety. Testing after the system modification can be properly completed in Refueling Outage 16 will meet all ASME OM Code requirements to provide the necessary assurance of pump operational readiness.

Using the provisions of this 10 CFR 50.55a request as an alternative to the specific requirements of ISTB-3400 identified in Table ISTB-3400-1 will provide adequate indication of pump performance and continue to provide an acceptable level of quality and safety. Therefore, pursuant to 10 CFR 50.55a(a)(3)(ii) one-time relief is requested from the requirements of ASME OM Code ISTB-3400 for the Comprehensive Pump Test.

6. Duration of Proposed Alternative

This one-time relief would be utilized until the containment spray pump biennial comprehensive tests can be performed during Refueling Outage 16, which at this time is scheduled to start on March 22, 2008 and end on April 23, 2008.

WCNOC is currently evaluating the feasibility of implementing regulation 10 CFR 50.69 in conjunction with a WOG effort to demonstrate how this regulation could be implemented using the guidance of the final draft of NEI 00-04. If it is determined that the implementation of 10 CFR 50.69 is in the best interests of WCGS, subsequent relief will be applied for to extend the deferral of the comprehensive pump test on the containment spray pumps.

Figure 1

Containment Spray Pump Test Flow Diagram

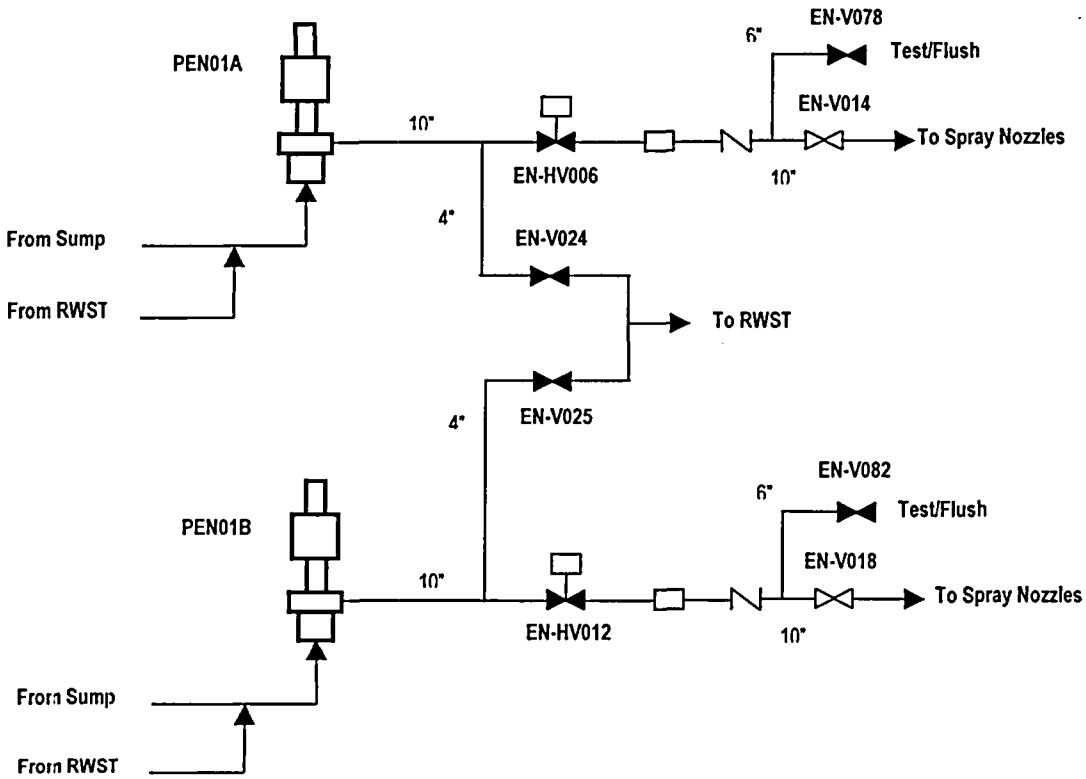

Figure 2

Containment Spray Pump Characteristic Curve

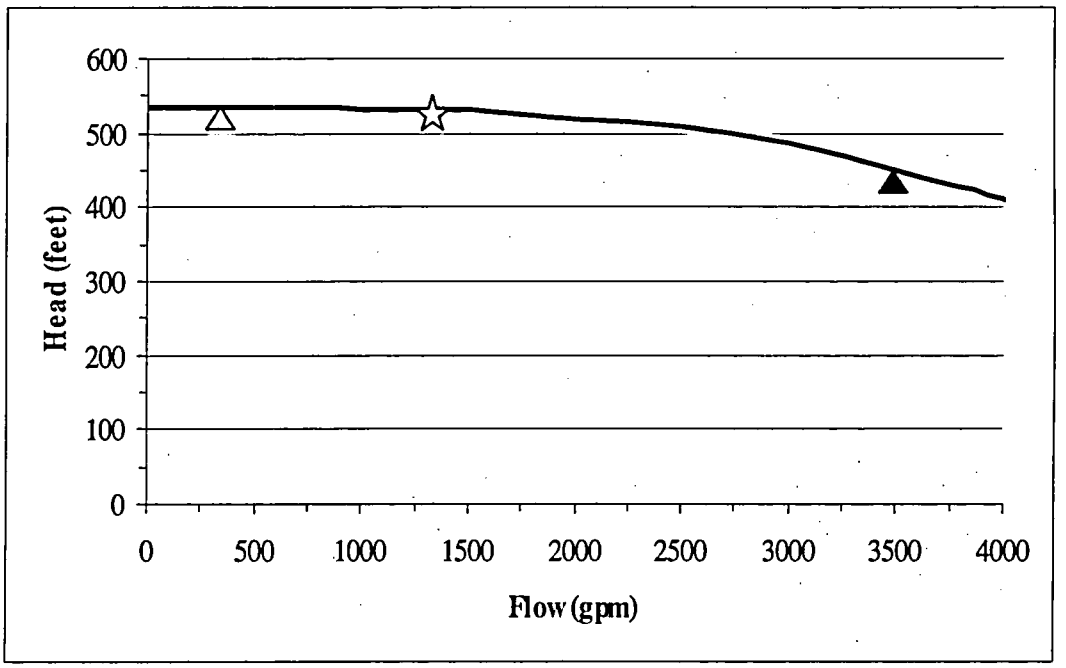

▲ - Pump Design Point (3615 gpm)

△ - Quarterly Pump Test Point (set parameter is flow at 300 gpm)

☆ - 11/2/2005 Pump Test Result Point at 1,387 GPM