Duke Power®
A Duke Energy Company

D.M. JAMIL
Vice President

Duke Power
Catawba Nuclear Station
4800 Concord Rd. / CN01VP
York, SC 29745-9635

803 831 4251
803 831 3221 fax

March 6, 2006

U.S. Nuclear Regulatory Commission
Attention: Document Control Desk
Washington, D.C. 20555

Subject: Duke Energy Corporation
Catawba Nuclear Station, Unit 2
Docket Number 50-414
Submittal of Third Ten-Year Interval
Inservice Inspection Plan and Inservice
Inspection Pressure Test Plan

Please find attached a copy of the subject plans which cover the third ten-year inspection interval for Catawba Unit 2, which began on October 15, 2005. The third ten-year inspection interval was originally to have begun on August 19, 2006; however, Duke Energy Corporation elected to begin the interval early for Catawba Unit 2 so as to align all of its nuclear units to the same start date and ASME Code Edition/Addenda.

The attachments to this letter contain all technical information necessary in support of this submittal. Duke Energy Corporation is providing these plans for NRC information only. No specific NRC action is being requested via this letter.

There are no regulatory commitments contained in this letter or its attachments.

If you have any questions concerning this material, please call L.J. Rudy at (803) 831-3084.

A047

Very truly yours,

D.M. Jamil

LJR/s

Attachment 1 Inservice Inspection Plan
Attachment 2 Inservice Inspection Pressure Test Plan

xc (with attachments):

W.D. Travers, Regional Administrator
U.S. Nuclear Regulatory Commission, Region II
Atlanta Federal Center
61 Forsyth St., SW, Suite 23T85
Atlanta, GA 30303

E.F. Guthrie, Senior Resident Inspector
U.S. Nuclear Regulatory Commission
Catawba Nuclear Station

J.F. Stang, Jr., Project Manager (addressee only)
U.S. Nuclear Regulatory Commission
Mail Stop 8-H4A
Washington, D.C. 20555-0001

Attachment 1

Inservice Inspection Plan

THIRD INTERVAL INSERVICE INSPECTION PLAN

CATAWBA NUCLEAR STATION UNIT 2

GENERAL REQUIREMENTS

REVISION 0

Duke Power SM

A Duke Energy Company

Prepared By: Gary D Sanborn Date 2/28/06

Reviewed By: James E. Cherry Date 2/28/06

Approved By: R. Kevin Rhyne Date 2/28/06

ANII Review: Robert McGill Date 3-1-06

A.J. Hogge, Jr.
(704) 382-5110
ajhogge@duke-energy.com

J.E.Cherry
(704) 382-5055
jecherry@duke-energy.com

CATAWBA NUCLEAR STATION

GENERAL INFORMATION

Catawba Nuclear Station's Inservice Inspection Plan is comprised of two separate volumes, the first is General Requirements; the second is identified as Unit 2.

Plant Location: 4800 Concord Road, York, South Carolina 29745

Commercial Service Date:	Catawba Unit 2	August 19,1986
Third Interval Start Date:	Catawba Unit 2	October 15, 2005
Third Interval End Date:	Catawba Unit 2	August 19, 2016

Owner: Duke Energy Corporation
526 South Church St.
Mail Code EC05A
Charlotte, N. C. 28201-1006

TABLE OF CONTENTS

GENERAL REQUIREMENTS

SECTION	TITLE	REVISION
1.0	Applicable Codes and Standards for Inservice Inspection	0
2.0	System Boundaries Subject to Inspection	0
3.0	Inspection Methods and Procedures to be Used for Inservice Inspection	0
4.0	Description of Inservice Inspection Plan for ASME Class 1 Items	0
5.0	Description of Inservice Inspection Plan for ASME Class 2 Items	0
6.0	Description of Inservice Inspection Plan for ASME Class 3 Items	0
7.0	Description of Augmented and Elective Inservice Inspection Plan	0
8.0	Description of Examination Listings	0
9.0	Requests for Relief From ASME Code Requirements	0
10.0	Calibration Standards	0

1.0 Applicable Codes and Standards for Inservice Inspection

In accordance with the requirements of Paragraphs 50.55a (b)(2) and (g) of 10CFR Part 50 (effective date October 28, 2002), the inservice inspection of Unit 2 of the Catawba Nuclear Station will be performed in accordance with Inspection Program B of the 1998 Edition of ASME Section XI, thru the 2000 Addenda, hereafter referred to as Section XI, subject to the following limitations and modifications:

Paragraph IWB-1220, shall be performed in accordance with 1989 Edition of ASME Section XI as required per Paragraph 50.55a(b)(2)(xi) of 10CFR Part 50.

Paragraph IWB-2500-1, Examination Category B-D (items B3.120 and B3.140) shall be performed in accordance with 1998 Edition of ASME Section XI as required per Paragraph 50.55a(b)(2)(xxi)(A) of 10CFR Part 50. This paragraph allows a VT examination with enhanced magnification to be performed in lieu of the UT examination.

Paragraph IWB-2500-1, Examination Category B-G-2 (items B7.80) shall be performed in accordance with 1995 Edition of ASME Section XI for reused bolting as required per Paragraph 50.55a(b)(2)(xxi)(B) of 10CFR Part 50.

Paragraph IWB-2500-1, Examination Category B-K (items B10.10) shall be performed in accordance with 1995 Addenda of ASME Section XI as required per Paragraph 50.55a(b)(2)(xxi)(C) of 10CFR Part 50.

1.1 Additional Codes and Standards Used

Inspections performed in addition to those required by Section XI are described in Section 7.0 of this Plan. The following codes and standards apply to these inspections:

1.1.1 Effective August 5, 2004, the Catawba Reactor Coolant Flywheels will be inspected in accordance with the alternative inspection techniques described in the Catawba Units 1 and 2 Technical Specifications 5.5.7, Amendment Numbers 216 and 210.

1.1.2 Steam generator tubing will be inspected as required by ASME Section XI and the Catawba Technical Specifications for Catawba Nuclear Station. The Steam Generator Maintenance Section/Nuclear Technical Services Division has overall responsibility for this inspection. This work is planned, implemented, documented and reported independently from this document.

1.1.3 Augmented examinations on certain systems or components will be performed in accordance with other editions or addenda of ASME Section XI, as identified in the governing commitment.

1.1.4 Elective examinations on certain systems or components will be performed in accordance with other editions or addenda of ASME Section XI, as identified in the governing commitment.

1.2 Code Cases Applicable to the ASME Boiler and Pressure Vessel Code Section XI

The following code cases will be used for the Third Interval Inservice Inspection Program at Catawba Units 2:

1.2.1	Code Case N-307-3:	"Revised Ultrasonic Examination Volume For Class 1 Bolting, Table IWB-2500-1, Examination Category B-G-1, When The Examinations Are Conducted from The End of the Bolt or Stud or from the Center-Drilled Hole." (This code case is approved for use under Regulatory Guide 1.147, Revision 14.)
1.2.2	Code Case N-460:	"Alternative Examination Coverage For Class 1 and Class 2 Welds". (This code case is approved for use under Regulatory Guide 1.147, Revision 14.)
1.2.3	Code Case N-613-1	Ultrasonic Examination of Full Penetration Nozzles in Vessels, Examination Category B-D, Item No's B3.10 and B3.90, Reactor Nozzle-To-Vessel Welds, Figs. IWB-2500-7(a), (b), and (c) Section XI, Division 1. (This Code Case is approved for use under Regulatory Guide 1.147, Revision 14.
1.2.4	Code Case N-624	Successive Inspections Section XI, Division 1. (This code case is approved for use under Regulatory Guide 1.147, Revision 14.)
1.2.5	Code Case N-639	Alternative Calibration Block Material, Section XI, Division 1. (This Code Case has been conditionally approved for use under Regulatory Guide 1.147, Revision 14).
1.2.6	Code Case N-648-1	Alternative Examination Requirements for Inner Radius Examinations of Class 1 Reactor Vessel Nozzles. (This Code Case has been conditionally approved for use under Regulatory Guide 1.147, Revision 14).
1.2.7	Code Case N-695	Qualification Requirements for Dissimilar Piping Welds (This Code Case is approved for use under Regulatory Guide 1.147, Revision 14)

1.3 Applicable Duke Power Administrative Procedures

The following Duke Power procedures will be used to control preservice and inservice inspection activities and inservice inspection plans and reports:

PROCEDURE NO.	TITLE
NSD-300	"ASME Section XI Program"
NSD-701	"Records Management"
NSD-702	"Document Management"
NSD-800	"Software and Data Quality Assurance (SDQA) Program"
QA-502	"Digitization and Optical Storage of Records
QA-513	"Preparation and Implementation of ASME Section XI Inservice Inspection Plans Including Requirements for Augmented and Elective Examinations"
QA-516	"Evaluation of ISI Indications"
QA-520	"Preparation and Distribution of Inservice Inspection Reports"
QAL-5	"Control Of Preservice And Inservice Inspection Activities"
SDQA-30177-NGO	"ISIDBMS" (Inservice Inspection Database Management System)

2.0 System Boundaries Subject to Inspection

The boundaries of Class 1, 2 and 3 non-exempt systems are shown on ISI NDE Boundary Drawings listed in Section 2 of the unit specific volumes. Unless otherwise noted, systems designated as Class 1 are equivalent to ASME Class 1, Class 2 are equivalent to ASME Class 2, and Class 3 are equivalent to ASME Class 3.

2.1 Class 1 Components Exempted From Volumetric and Surface Examination

2.1.1 Components that are connected to the reactor coolant system and part of the reactor coolant pressure boundary, and that are of such a size and shape so that upon postulated rupture the resulting flow of coolant from the reactor coolant system under normal plant operating conditions is within the capacity of makeup systems which are operable from on-site emergency power. Reference Section XI, Paragraph IWB-1220(a). (Also reference 10CFR50a (b)(2)(xi) in Section 1.0 of this document.)

2.1.2 Piping of NPS 1" and smaller, except for steam generator tubing. Reference Section XI, Paragraph IWB-1220(b) (1). (Also reference 10CFR50a (b)(2)(xi) in Section 1.0 of this document.)

2.1.3 Components and their connections in piping of NPS 1" and smaller. Reference Section XI, Paragraph IWB-1220(b) (2). (Also reference 10CFR50a (b)(2)(xi) in Section 1.0 of this document.)

2.1.4 Reactor vessel head connections and associated piping, NPS 2" and smaller, made inaccessible by control rod drive penetrations. Reference Section XI, Paragraph IWB-1220(c). (Also reference 10CFR50a (b)(2)(xi) in Section 1.0 of this document.)

2.2 Class 2 Components Within RHR, ECC, and CHR Exempted From Volumetric and Surface Examination

2.2.1 For systems except high pressure safety injection: vessels, piping, pumps, valves, and their connections in piping NPS 4" and smaller. Reference Section XI, Paragraphs IWC-1221(a) (1) and (2).

2.2.2 For high pressure safety injection systems: vessels, piping, pumps, valves, and their connections in piping NPS $1^1/_2$" and smaller in high pressure safety injection systems. Reference Section XI, Paragraphs IWC-1221(b) (1) and (2).

2.2.3 Vessels, piping, pumps, valves, other components and their component connections of any size in statically pressurized, passive (i.e., no pumps) safety injection systems. Reference Section XI, Paragraph IWC-1221(c).

2.2.4 Piping and other components of any size beyond the last shutoff valve in open ended portions of systems that do not contain water during normal plant operating conditions. Reference Section XI, Paragraph IWC-1221(d).

2.3 Class 2 Components Within Systems Other Than RHR, ECC, And CHR Exempted From Volumetric and Surface Examination

2.3.1 For systems except auxiliary feedwater systems: vessels, piping, pumps, valves, and their connections in piping NPS 4" and smaller. Reference Section XI, Paragraphs IWC-1222(a) (1) and (2).

2.3.2 For auxiliary feedwater systems: vessels, piping, pumps, valves, and their connections in piping NPS $1^1/_2$" and smaller. Reference Section XI, Paragraphs IWC-1222(b) (1) and (2).

2.3.3 Vessels, piping, pumps, valves, other components, and component connections of any size in systems or portions of systems that operate (when the system function is required) at a pressure equal to or less than 275 psig and at a temperature equal to or less than 200 ° F. Reference Section XI, Paragraph IWC-1222(c).

2.3.4 Piping and other components of any size beyond the last shutoff valve in open ended portions of systems that do not contain water during normal plant operating conditions. Reference Section XI, Paragraph IWC-1222(d).

2.4 Class 2 Inaccessible Welds

Welds or portions of welds that are inaccessible due to being encased in concrete, buried underground, located inside a penetration, or encapsulated by guard pipe are exempted from examination requirements. Reference Section XI, Paragraph IWC-1223.

2.5 Class 3 Items Exempted From VT-1 Examination

2.5.1 Vessels, piping, pumps, valves, and their connections in piping NPS 4" and smaller. Reference Section XI, Paragraphs IWD-1220(a) and (b).

2.5.2 Components that operate at a pressure of 275 psig or less and at a temperature of 200°F or less in systems (or portions of systems) whose function is not required in support of reactor residual heat removal, containment heat removal, and emergency core cooling. Reference Section XI, Paragraph IWD-1220(c).

2.5.3 Welds or portions of welds that are inaccessible due to being encased in concrete, buried underground, located inside a penetration, or encapsulated by guard pipe are exempted from examination requirements. Reference Section XI, Paragraph IWD-1220(d).

2.6 Class 1, 2, and 3 Supports Exempted From VT-3 Examination

Supports exempt from the examination requirements of IWF-2000 are those connected to piping and other items exempted from volumetric, surface, or VT-1 or VT-3 visual examination by IWB-1220, IWC-1220, and IWD-1220. In addition, portions of supports that are inaccessible by being encased in concrete, buried underground, or encapsulated by guard pipe. Reference Section XI, Paragraph IWF-1230.

2.7 Examination Boundaries

Section 2 of the Unit specific volumes contain a listing of flow diagrams that are color-coded to identify the NDE examination required on each portion of the system. The codes used for NDE examinations are described below:

Red	Class 1 system, not exempted
Yellow	Class 2 system, not exempted
Green	Class 3 system, not exempted
Blue	System (or portions of systems) exempt from examination
Black	System (or portions of systems) that is not ASME Class 1, 2, or 3. This system is not subject to ASME Section XI Requirements.

Revisions to the plant system flow diagrams are reviewed for additions/changes to the ISI boundaries. These additions/changes are incorporated into the ISI NDE Boundary Drawings and the ISI Plan as necessary. These ISI NDE Boundary Drawings are stored electronically and can be found in the Nuclear Electronic Document Library (NEDL). The original marked-up ISI NDE Boundary Drawings are maintained in the General Office. Controlled copies will be issued as required by Document Management.

2.8 Inspection Interval and Inspection Periods

Reference Section 8.0 for a matrix of end of cycle vs. outage nomenclature.

Third Inspection Interval

Unit 2

Start Date			End Date
10/15/2005	10/15/2008	10/15/2012	08/19/2016
1ST Period	2ND Period	3RD Period	
Outage 1 (EOC 14)	Outage 3 (EOC 16)	Outage 6 (EOC 19)	
Outage 2 (EOC 15)	Outage 4 (EOC 17)	Outage 7 (EOC 20)	
	Outage 5 (EOC 18)		

3.0 Inspection Methods and Procedures to be used for Inservice Inspection

Inservice inspection of Catawba Unit 2 will be performed using procedures which comply with the requirements of the applicable codes referenced in Section 1.0 of this plan. Volumetric, surface, and visual methods of inspection will be used as required. Each inspection will be performed under the QA Program of the organization performing the inspection.

A specific examination procedure is referenced for each inspection method listed in Section 8.0 of this Plan. Procedures beginning with "NDE" or "PDI" are found in the Duke Power Company NDE Procedure Manuals. Procedures beginning with "QAL" are found in the Nuclear Inspection Procedures Manual. Vendor inspection procedures that are to be used will be listed in section 3.7 of this plan as they become identified. Duke Power inspection procedures will also be listed in Section 3.7 of this plan.

3.1 Volumetric Inspection

Volumetric inspection will be performed by manual and/or automated ultrasonic methods, except in some cases where ultrasonic methods are not practical. Radiographic examinations will be used in these cases in lieu of ultrasonic examinations. Inspection of reactor vessel welds will be performed using an automated ultrasonic inspection device.

Steam generator tubing will be examined using eddy current inspection methods as outlined in the Catawba Technical Specifications. The Steam Generator Maintenance Section/Nuclear Technical Services Division has overall responsibility for implementing and reporting any inspections pertaining to the Steam Generator Tubes. This work is planned, implemented, documented and reported independently from this document.

3.2 Surface Inspection

Surface inspection will be performed using either liquid penetrant or magnetic particle methods. The liquid penetrant method will be used for all surface inspections on austenitic steels and may also be used on ferritic steel. The magnetic particle method will only be used on ferritic steel.

3.3 Visual Inspection

Inservice visual inspections will be performed using direct methods where practical. Remote visual examinations may be used in some cases.

3.4 Pressure Testing

Inservice inspection pressure testing requirements will be addressed in the Duke Energy Corporation Inservice Inspection Pressure Test Plan. This work is planned, implemented, and documented independently from this document; however, this work is reported along with inspections items from this document.

3.5 Snubber Testing

The Inservice Testing and Inspection of Snubbers (IWF-5000) will be performed per Selected Licensee Commitments, Section 16.9-13. The site Mechanical/Civil Engineering Section will be responsible for all testing, inspecting, and reporting under this program. This work is planned, implemented, documented and reported independently from this document.

3.6 Containment Inspections

The Inservice Inspection of Containment as required by the ASME Section XI Code, Subsections IWE and IWL is the responsibility of the Materials, Piping and Seismic Section, Nuclear Technical Services Division. This work is planned, implemented, documented and reported independently from this document.

3.7 Inspection Procedures

PROCEDURE NO.	TITLE
NDE-12	"General Radiography Procedure for Preservice and Inservice Inspection"
NDE-25	"Magnetic Particle Examination"
NDE-35	"Liquid Penetrant Examination"
NDE-600	"Ultrasonic Examination of Similar Metal Welds in Wrought Ferritic and Austenitic Piping"
NDE-620	"Ultrasonic Examination of Welds in Ferritic Pressure Vessels Greater than 2 Inches in Thickness"
NDE-640	" Ultrasonic Examination using Longitudinal Wave and Shear Wave, Straight Beam Technique"
NDE-650	"Ultrasonic Examination of Reactor Pressure Vessel Flange-to-Shell Welds"
NDE-680	"Ultrasonic Examination of Nozzle Inner Radii in Ferritic Pressure Vessels"
NDE-820	"Ultrasonic Examination of Welds in Ferritic Pressure Vessels Greater Than 2 Inches in Thickness"
NDE-830	"Ultrasonic Examination of Cast Austenitic Welds Using Refracted Longitudinal Waves at Catawba Nuclear Station"
NDE-910	"Ultrasonic Examination of Smaller Diameter Thin Wall Piping Welds and Base Material"

PROCEDURE NO.	TITLE
NDE-949	"Ultrasonic Examination of Reactor Coolant Pump Flywheels at McGuire and Catawba Nuclear Stations"
NDE-952	"Ultrasonic Examination of Pressurizer Support Skirt Welds"
NDE-3630	"Ultrasonic Examination of Welds in Pressure Vessels 2 Inches and Less in Thickness"
QAL-13	"ISI Visual Examination, VT-1"
QAL-14	"ISI Visual Examination, VT-3 and VT-4"
PDI-UT-1	"PDI Generic Procedure for The Ultrasonic Examination of Ferritic Pipe Welds"
PDI-UT-2	"PDI Generic Procedure for The Ultrasonic Examination of Austenitic Pipe Welds"
PDI-UT-5	"PDI Generic Procedure for Straight Beam Ultrasonic Examination of Bolts and Studs"
PDI-UT-6	"PDI Generic Procedure for The Manual Ultrasonic Examination of Reactor Vessel Welds"
PDI-UT-10	"PDI Generic Procedure for The Ultrasonic Examination of Dissimilar Metal Piping Welds"

The latest revision of each procedure that has been approved by Duke Power Company for Catawba Nuclear Station Unit 2 will be used.

4.0 Description of Inservice Inspection Plan for ASME Class 1 Items

The inservice inspection of ASME Class 1 Items shall be performed in accordance with the requirements of Article IWB-2000 of Section XI. A description of examination listings and schedules are found in Section 8.0 of this Plan. Class 1 examinations were scheduled for the Third Inspection Interval in accordance with the following table from ASME Section XI Inspection Program B:

Table IWB-2412-1

Inspection Interval	Inspection Period, Calendar Years of Plant Service Within the Interval	Minimum Examinations Completed, %	Maximum Examinations Credited, %
3rd	3	16	50
	7	50 Note 1	75
	10	100	100

Note 1: If the first period completion percentage for any examination category exceeds 34%, at least 16% of the required examinations shall be performed in the second period.

4.1 Examination Categories and Requirements

The examination categories to be used are those listed in Table IWB-2500-1 of Section XI. Specific examinations will be identified by an Item Number similar to those listed in Table IWB-2500-1 of Section XI, plus an additional number to uniquely identify that examination. (Example: B01.011.001)

Class 1 Items to be inspected includes:

Category B-A **Pressure Retaining Welds In Reactor Vessel**

IWB-2500-1 Item No.	Component To Be Examined	Comments
B1.10	**Shell Welds**	
B1.11	Circumferential	
B1.12	Longitudinal	
B1.20	**Head Welds**	
B1.21	Circumferential	

Category B-A (cont.)

IWB-2500-1 Item No.	Component To Be Examined	Comments
B1.22	Meridional	
B1.30	Shell-to-Flange Weld	
B1.40	Head-to-Flange Weld	
B1.50	**Repair Welds**	
B1.51	Beltline region	N/A for Catawba 2

Category B-B Pressure Retaining Welds In Vessels Other Than Reactor Vessels

IWB-2500-1 Item No.	Component To Be Examined	Comments
	Pressurizer	
B2.10	**Shell-to-Head**	
B2.11	Circumferential	
B2.12	Longitudinal	
B2.20	**Head Welds**	
B2.21	Circumferential	N/A for Catawba 2
B2.22	Meridional	N/A for Catawba 2
	Steam Generators (Primary Side)	
B2.30	**Head Welds**	
B2.31	Circumferential	N/A for Catawba 2
B2.32	Meridional	N/A for Catawba 2
B2.40	Tubesheet-to-Head Weld	

Category B-B (cont.)

IWB-2500-1 Item No.	Component To Be Examined	Comments
	Heat Exchangers (Primary Side) - Head	
B2.50	**Head Welds**	
B2.51	Circumferential	N/A for Catawba 2
B2.52	Meridional	N/A for Catawba 2
	Heat Exchangers (Primary Side) - Shell	
B2.60	Tubesheet-to-Head Welds	N/A for Catawba 2
B2.70	Longitudinal Welds	N/A for Catawba 2
B2.80	Tubesheet-to-Shell Welds	N/A for Catawba 2

Category B-D Full Penetration Welded Nozzles In Vessels - Inspection Program B

IWB-2500-1 Item No.	Component To Be Examined	Comments
	Reactor Vessel	
B3.90	Nozzle-to-Vessel Welds	
B3.100	Nozzle Inside Radius Section	
	Pressurizer	
B3.110	Nozzle-to-Vessel Welds	
B3.120	Nozzle Inside Radius Section	Reference General Requirements Section 1.0
	Steam Generators (Primary Side)	
B3.130	Nozzle-to-Vessel Welds	N/A for Catawba 2
B3.140	Nozzle Inside Radius Section	Reference General Requirements Section 1.0

Category B-D (cont.)

IWB-2500-1 Item No.	Component To Be Examined	Comments
	Heat Exchangers (Primary Side)	
B3.150	Nozzle-to-Vessel Welds	N/A for Catawba 2
B3.160	Nozzle Inside Radius Section	N/A for Catawba 2

Category B-F Pressure Retaining Dissimilar Metal Welds in Vessel Nozzles

IWB-2500-1 Item No.	Component To Be Examined	Comments
	Reactor Vessel	
B5.10	NPS 4 or Larger Nozzle-to-Safe End Butt Welds	
B5.20	Less Than NPS 4 Nozzle-to-Safe End Butt Welds	N/A for Catawba 2
B5.30	Nozzle-to-Safe End Socket Welds	N/A for Catawba 2
	Pressurizer	
B5.40	NPS 4 or Larger Nozzle-to-Safe End Butt Welds	
B5.50	Less Than NPS 4 Nozzle-to-Safe End Butt Welds	N/A for Catawba 2
B5.60	Nozzle-to-Safe End Socket Welds	N/A for Catawba 2
	Steam Generator	
B5.70	NPS 4 or Larger Nozzle-to-Safe End Butt Welds	
B5.80	Less Than NPS 4 Nozzle-to-Safe End Butt Welds	N/A for Catawba 2
B5.90	Nozzle-to-Safe End Socket Welds	N/A for Catawba 2

Category B-F (cont.)

IWB-2500-1 Item No.	Component To Be Examined	Comments
	Heat Exchangers	
B5.100	NPS 4 or Larger Nozzle-to-Safe End Butt Welds	N/A for Catawba 2
B5.110	Less Than NPS 4 Nozzle-to-Safe End Butt Welds	N/A for Catawba 2
B5.120	Nozzle-to-Safe End Socket Welds	N/A for Catawba 2

Category B-G-1 Pressure Retaining Bolting, Greater Than 2 in. In Diameter

IWB-2500-1 Item No.	Component To Be Examined	Comments
	Reactor Vessel	
B6.10	Closure Head Nuts	
B6.20	Closure Studs, in place	Closure studs are examined when removed, see B6.30
B6.30	Closure Studs, when removed	
B6.40	Threads in Flange	
B6.50	Closure Washers, Bushings	
	Pressurizer	
B6.60	Bolts and Studs	N/A for Catawba 2
B6.70	Flange Surface, when connection disassembled	N/A for Catawba 2
B6.80	Nuts, Bushings, and Washers	N/A for Catawba 2

Category B-G-1 (cont.)

IWB-2500-1 Item No.	Component To Be Examined	Comments
	Steam Generators	
B6.90	Bolts and Studs	N/A for Catawba 2
B6.100	Flange Surface, when connection disassembled	N/A for Catawba 2
B6.110	Nuts, Bushings, and Washers	N/A for Catawba 2
	Heat Exchangers	
B6.120	Bolts and Studs	N/A for Catawba 2
B6.130	Flange Surface, when connection disassembled	N/A for Catawba 2
B6.140	Nuts, Bushing, and Washers	N/A for Catawba 2
	Piping	
B6.150	Bolts and Studs	N/A for Catawba 2
B6.160	Flange Surface, when connection disassembled	N/A for Catawba 2
B6.170	Nuts, Bushing, and Washers	N/A for Catawba 2
	Pumps	
B6.180	Bolts and Studs	
B6.190	Flange Surface, when connection disassembled	
B6.200	Nuts, Bushings, and Washers	N/A for Catawba 2
	Valves	
B6.210	Bolts and Studs	N/A for Catawba 2
B6.220	Flange Surface, when connection disassembled	N/A for Catawba 2
B6.230	Nuts, Bushings, and Washers	N/A for Catawba 2

Category B-G-2 Pressure Retaining Bolting, 2 in. And Less In Diameter

IWB-2500-1 Item No.	Component To Be Examined	Comments
	Reactor Vessel	
B7.10	Bolts, Studs, and Nuts	N/A for Catawba 2
	Pressurizer	
B7.20	Bolts, Studs, and Nuts	
	Steam Generators	
B7.30	Bolts, Studs, and Nuts	
	Heat Exchangers	
B7.40	Bolts, Studs, and Nuts	N/A for Catawba 2
	Piping	
B7.50	Bolts, Studs, and Nuts	
	Pumps	
B7.60	Bolts, Studs, and Nuts	
	Valves	
B7.70	Bolts, Studs, and Nuts	
	CRD Housing	
B7.80	Bolts, Studs, and Nuts	Reference General Requirements Section 1.0

Category B-J Pressure Retaining Welds In Piping

IWB-2500-1 Item No.	Component To Be Examined	Comments
B9.10	**NPS 4 or Larger**	
B9.11	Circumferential Welds	
B9.20	**Less Than NPS 4**	
B9.21	Circumferential Welds	

Category B-J (cont.)

IWB-2500-1 Item No.	Component To Be Examined	Comments
B9.30	**Branch Pipe Connection Welds**	
B9.31	NPS 4 or Larger	
B9.32	Less Than NPS 4	
B9.40	Socket Welds	

Category B-K Welded Attachments For Vessels, Piping, Pumps, And Valves

IWB-2500-1 Item No.	Component To Be Examined	Comments
	Pressure Vessels	
B10.10	Welded Attachments	Reference General Requirements Section 1.0
	Piping	
B10.20	Welded Attachments	N/A for Catawba 2
	Pumps	
B10.30	Welded Attachments	N/A for Catawba 2
	Valves	
B10.40	Welded Attachments	N/A for Catawba 2

Category B-L-1 Pressure Retaining Welds In Pump Casings
B-M-1 Pressure Retaining Welds In Valve Bodies
B-L-2 Pump Casings
B-M-2 Valve Bodies

IWB-2500-1 Item No.	Component To Be Examined	Comments
	Pumps	
B12.10	Pump Casing Welds (B-L-1)	N/A for Catawba 2
B12.20	Pump Casing (B-L-2)	

Category B-L-1, B-M-1, B-L-2, and B-M-2 (cont.)

IWB-2500-1 Item No.	Component To Be Examined	Comments
	Valves	
B12.30	Valves, Less Than NPS 4 Valve Body Welds (B-M-1)	N/A for Catawba 2
B12.40	Valves, NPS 4 or Larger Valve Body Welds (B-M-1)	
B12.50	Valve Body, Exceeding NPS 4 (B-M-2)	

Category B-N-1 Interior Of Reactor Vessel
B-N-2 Welded Core Support Structures And Interior Attachments To Reactor Vessels
B-N-3 Removable Core Support Structures

IWB-2500-1 Item No.	Component To Be Examined	Comments
	Reactor Vessel	
B13.10	Vessel Interior (B-N-1)	Each Inspection Period
	Reactor Vessel (PWR)	
B13.50	Interior Attachments Within Beltline Region (B-N-2)	N/A for Catawba 2
B13.60	Interior Attachments Beyond Beltline Region (B-N-2)	
B13.70	Core Support Structure (B-N-3)	

Category B-O Pressure Retaining Welds In Control Rod Housings

IWB-2500-1 Item No.	Component To Be Examined	Comments
	Reactor Vessel	
B14.10	Welds in CRD Housing	

Category B-P **All Pressure Retaining Components**

IWB-2500-1 Item No.	Component To Be Examined	Comments
	Reactor Vessel	
B15.10	Pressure Retaining Boundary	Reference Duke Energy Corporation Inservice Inspection Pressure Test Plan
	Pressurizer	
B15.20	Pressure Retaining Boundary	Reference Duke Energy Corporation Inservice Inspection Pressure Test Plan
	Steam Generators	
B15.30	Pressure Retaining Boundary	Reference Duke Energy Corporation Inservice Inspection Pressure Test Plan
	Heat Exchangers	
B15.40	Pressure Retaining Boundary	Reference Duke Energy Corporation Inservice Inspection Pressure Test Plan
	Piping	
B15.50	Pressure Retaining Boundary	Reference Duke Energy Corporation Inservice Inspection Pressure Test Plan
	Pumps	
B15.60	Pressure Retaining Boundary	Reference Duke Energy Corporation Inservice Inspection Pressure Test Plan
	Valves	
B15.70	Pressure Retaining Boundary	Reference Duke Energy Corporation Inservice Inspection Pressure Test Plan

Category B-Q Steam Generator Tubing

IWB-2500-1 Item No.	Component To Be Examined	Comments
B16.10	Steam Generator Tubing in Straight Tube Design	N/A for Catawba 2
B16.20	Steam Generator Tubing in U-Tube Design	Reference General Requirements Section 3.1

Category F-A Supports

IWF-2500-1 Item No.	Component To Be Examined	Comments
F1.10	Class 1 Piping Supports (Category A)	
F1.11	Class 1 Piping Supports (Category B)	
F1.12	Class 1 Piping Supports (Category C)	
F1.40	Supports Other Than Piping Supports (Class 1)	

ASME/ANSI OM-1987, Part 4 Snubbers

IWF-2500-1 Item No.	Component To Be Examined	Comments
F1.50	Class 1 Snubbers	See Footnote[1]

4.2 Stress Weld Selection for Inservice Inspection

Welds shall be selected for inservice inspection in accordance with Article IWB-2000 of Section XI. The selection criteria for each category of Table IWB-2500-1 will be applied. Class 1 welds that exceeded the stress criteria given in Duke Power Company Piping Analysis Specification CNS-1206.02-01-0008, Section 3.8.7 are listed below. These are weld locations where the primary plus secondary stress intensity (ASME Section III, Eq. 10, NB-3653.1) is greater than 2.4 Sm and where the cumulative usage factor (U) exceeded 0.40. During the first inspection interval the "Stress Welds", plus "Terminal Ends", "Dissimilar Metal", and "Additional Welds" were all inspected per the requirements of Table IWB-2500-1. As noted these inspections included randomly selected "Additional Welds" to ensure that 25 percent of the total Class 1 weld population was inspected. To meet the requirement that all initially selected welds be re-inspected during each inspection interval, these same welds will remain in the inspection

[1] Duke Power arbitrarily chose to use the Item Number (F1.50) to identify these examinations. Reference Request for Relief TBD in Section 9.

program for the next interval. Class 1 welds that exceed the stress criteria given in Table IWB-2500-1 are listed below:

4.2.1 Catawba 2

Item Number	Weld Number	Piping Isometric	NDE Boundary Drawings
B09.021.017	2NC51-1	CN-2NC-51	CN-ISIN3-2553-1.0
B09.021.022	2NC52-8	CN-2NC-52	CN-ISIN3-2553-1.0
B09.021.101	2NV119-1	CN-2NV-119	CN-ISIN3-2554-1.0
B09.021.102	2NV119-2	CN-2NV-119	CN-ISIN3-2554-1.0
B09.021.103	2NV185-1	CN-2NV-185	CN-ISIN3-2554-1.0
B09.021.104	2NV185-2	CN-2NV-185	CN-ISIN3-2554-1.0
B09.040.009	2NC74-1	CN-2NC-74	CN-ISIN3-2553-1.0

5.0 Description of Inservice Inspection Plan for ASME Class 2 Items

The inservice inspection of ASME Class 2 Items shall be performed in accordance with the requirements of Article IWC-2000 of Section XI. A description of examination listings and schedules are found in Section 8.0 of this Plan. Class 2 examinations were scheduled for the Third Inspection Interval in accordance with the following table from ASME Section XI Inspection Program B:

Tables IWC-2412-1

Inspection Interval	Inspection Period, Calendar Years of Plant Service Within the Interval	Minimum Examinations Completed, %	Maximum Examinations Credited, %
3rd	3	16	50
	7	50 Note 1	75
	10	100	100

Note 1: If the first period completion percentage for any examination category exceeds 34%, at least 16% of the required examinations shall be performed in the second period.

5.1 Examination Categories and Requirements

The examination categories to be used are those listed in Table IWC-2500-1 of Section XI. Specific examinations will be identified by an Item Number, similar to those listed in Table IWC-2500-1 of Section XI, plus an additional number to uniquely identify that examination. (Example C01.010.001)

Class 2 Items to be inspected includes:

Category C-A Pressure Retaining Welds In Pressure Vessels

IWC-2500-1 Item No.	Component To Be Examined	Comments
C1.10	Shell Circumferential Welds	
C1.20	Head Circumferential Welds	
C1.30	Tubesheet-to-Shell Weld	

Category C-B Pressure Retaining Nozzle Welds In Vessels

IWC-2500-1 Item No.	Component To Be Examined	Comments
C2.10	**Nozzles in Vessels ≤ 1/2 in. Nominal Thickness**	
C2.11	Nozzle-to-Shell (Nozzle to Head or Nozzle to Nozzle) Weld	
C2.20	**Nozzles Without Reinforcing Plate in Vessels > 1/2 in. Nominal Thickness**	
C2.21	Nozzle-to-Shell (Nozzle to Head or Nozzle to Nozzle) Weld	
C2.22	Nozzle Inside Radius Section	
C2.30	**Nozzles With Reinforcing Plate in Vessels > 1/2 in. Nominal Thickness**	
C2.31	Reinforcing Plate Welds to Nozzle and Vessel	
C2.32	Nozzle-to-Shell (Nozzle to Head or Nozzle to Nozzle) Welds When Inside of Vessel is Accessible	N/A for Catawba 2
C2.33	Nozzle-to-Shell (Nozzle to Head or Nozzle to Nozzle) Welds When Inside of Vessel is Inaccessible	Reference Duke Energy Corporation Inservice Inspection Pressure Test Plan

Category C-C Welded Attachments For Vessels, Piping, Pumps, And Valves

IWC-2500-1 Item No.	Component To Be Examined	Comments
	Pressure Vessels	
C3.10	Welded Attachments	
	Piping	
C3.20	Welded Attachments	
	Pumps	
C3.30	Welded Attachments	

Category C-C (cont.)

	Valves
C3.40	Welded Attachments

Category C-D **Pressure Retaining Bolting Greater Than 2 in. In Diameter**

IWC-2500-1 Item No.	Component To Be Examined	Comments
	Pressure Vessels	
C4.10	Bolts and Studs	N/A for Catawba 2
	Piping	
C4.20	Bolts and Studs	N/A for Catawba 2
	Pumps	
C4.30	Bolts and Studs	N/A for Catawba 2
	Valves	
C4.40	Bolts and Studs	N/A for Catawba 2

Category C-F-1 **Pressure Retaining Welds In Austenitic Stainless Steel Or High Alloy Piping**

IWC-2500-1 Item No.	Component To Be Examined	Comments
C5.10	**Piping Welds ≥ $^{3}/_{8}$ in. Nominal Wall Thickness for Piping > NPS 4**	
C5.11	Circumferential Weld	
C5.20	**Piping Welds >$^{1}/_{5}$ in. Nominal Wall Thickness for Piping ≥ NPS 2 and ≤ NPS 4**	
C5.21	Circumferential Weld	
C5.30	Socket Welds	

Category C-F-1 (cont.)

C5.40	**Pipe Branch Connections of Branch Piping ≥ NPS 2**
C5.41	Circumferential Weld

Category C-F-2 Pressure Retaining Welds In Carbon Or Low Alloy Steel Piping

IWC-2500-1 Item No.	Component To Be Examined	Comments
C5.50	**Piping Welds ≥ 3/8 in. Nominal Wall Thickness for Piping > NPS 4**	
C5.51	Circumferential Weld	
C5.60	**Piping Welds >1/5 in. Nominal Wall Thickness for Piping ≥ NPS 2 and ≤ NPS 4**	
C5.61	Circumferential Weld	
C5.70	Socket Welds	
C5.80	**Pipe Branch Connections of Branch Piping ≥ NPS 2**	
C5.81	Circumferential Weld	

Category C-G Pressure Retaining Welds In Pumps And Valves

IWC-2500-1 Item No.	Component To Be Examined	Comments
	Pumps	
C6.10	Pump Casing Welds	N/A for Catawba 2
	Valves	
C6.20	Valve Body Welds	

Category C-H All Pressure Retaining Components

IWC-2500-1 Item No.	Component To Be Examined	Comments
C7.10	Pressure retaining components	Reference Duke Energy Corporation Inservice Inspection Pressure Test Plan

Category F-A SUPPORTS

IWF-2500-1 Item No.	Component To Be Examined	Comments
F1.20	Class 2 Piping Supports (Category A)	
F1.21	Class 2 Piping Supports (Category B)	
F1.22	Class 2 Piping Supports (Category C)	
F1.40	Supports Other Than Piping Supports (Class 2)	

ASME/ANSI OM-1987, Part 4 Snubbers

IWF-2500-1 Item No.	Component To Be Examined	Comments
F1.50	Class 2 Snubbers	See Footnote[2]

[2] Duke Power arbitrarily chose to use the Item Number (F1.50) to identify these examinations. Reference Requests for Relief TBD in Section 9.

6.0 Description of Inservice Inspection Plan for ASME Class 3 Items

The inservice inspection of ASME Class 3 Items shall be performed in accordance with the requirements of Article IWD-2000 of Section XI. A description of examination listings and schedules are found in Section 8.0 of this Plan. Class 3 examinations were scheduled for the Third Inspection Interval in accordance with the following table from ASME Section XI Inspection Program B:

Tables IWD-2412-1

Inspection Interval	Inspection Period, Calendar Years of Plant Service Within the Interval	Minimum Examinations Completed, %	Maximum Examinations Credited, % [Note 1]
3rd	3	16	50
	7	50 Note 1	75
	10	100	100

Note 1: If the first period completion percentage for any examination category exceeds 34%, at least 16% of the required examinations shall be performed in the second period.

6.1 Examination Categories and Requirements

The examination categories to be used are those listed in Table IWD-2500-1 of Section XI. Specific examinations will be identified by an Item Number, similar to those listed in Table IWD-2500-1 of Section XI, plus an additional number to uniquely identify that examination; example, (D01.010.001).

Class 3 Items to be inspected includes:

Category D-A Welded Attachments for Vessels, Piping, Pumps, and Valves

IWD-2500-1 Item No.	Component to be Examined	Comments
	Pressure Vessels	
D1.10	Welded Attachments	
	Piping	
D1.20	Welded Attachments	
	Pumps	
D1.30	Welded Attachments	

Category D-A (cont.)

IWD-2500-1 Item No.	Component to be Examined	Comments
	Valves	
D1.40	Welded Attachments	N/A for Catawba 2

Category D-B All Pressure Retaining Components

IWD-2500-1 Item No.	Component To Be Examined	Comments
D2.10	Pressure retaining components	Reference Duke Energy Corporation Inservice Inspection Pressure Test Plan
D2.20	Pressure retaining components	Reference Duke Energy Corporation Inservice Inspection Pressure Test Plan

Category F-A Supports

IWF-2500-1 Item No.	Component to be Examined	Comments
F1.30	Class 3 Piping Supports (Category A)	
F1.31	Class 3 Piping Supports (Category B)	
F1.32	Class 3 Piping Supports (Category C)	
F1.40	Supports Other than Piping Supports (Class 3)	

ASME/ANSI OM-1987, Part 4 Snubbers

IWF-2500-1 Item No.	Component To Be Examined	Comments
F1.50	Class 3 Snubbers	See Footnote[3]

[3] Duke Power arbitrarily chose to use the Item Number (F1.50) to identify these examinations. Reference Requests for Relief TBD in Section 9.

7.0 Description of Augmented and Elective Inservice Inspection Plan

Augmented inservice inspections (regulator required) shall be performed as required in Section 1.0 of this Plan. Elective inservice inspections are performed for Duke Power Company (owner) defined reasons. A description of examination listings and schedules are found in Section 8.0 of this Plan.

Note:

Augmented and elective examination information found within this Inservice Inspection Plan is not required by the ASME Section XI Code; therefore, it is exempt from ANII review, verification and/or record certification.

7.1 Augmented Examination Categories and Requirements

Items requiring augmented inservice inspection are described in the following paragraphs. Each inspection will be assigned a unique Item Number.

7.1.1 Reactor Coolant Pump Flywheels (Item Number Series G01.001)

Prior to December 21, 1999, all Reactor Coolant Pump Flywheels were inspected in accordance with USNRC Regulatory Guide 1.14, Revision 1. Effective December 21,1999, the following alternative inspection techniques will be used in accordance with the Catawba Units 1 and 2 Technical Specifications 5.5.7, Amendment Numbers 182 and 174.

"A qualified in-place UT examination over the volume from the inner bore of the flywheel to the circle one-half of the outer radius or a surface examination (MT and/or PT) of exposed surfaces of the removed flywheels may be conducted at approximately 10 year intervals coinciding with the Inservice Inspection schedule as required by ASME Section XI."

Duke Power Company Position Adopted

At Duke Power, all flywheel inspections that have been completed in the current interval prior to December 21, 1999 under the old inspection requirements

1. Meet or exceed the new requirement and
2. Satisfy the inspection requirements for that flywheel for the interval.

Additional exams to meet the alternative (new) requirements need not be scheduled for an interval in which a 10–year inspection has already been performed.

Beginning on December 21, 1999, all flywheel examinations will be performed according to the alternative (new) requirements.

(Reference Duke Power Company, NGO/Materials, Metallurgy and Piping Engineering letter by M. A. Pyne, dated January 25, 2000.)

"Effective August 5, 2004, Technical Specification 5.5.7 Reactor Coolant Pump Flywheel Inspection Program was approved for revision to increase the inspection interval from 10 years to 20 years. The approval is in accordance with NRC Amendment No. 216 to Renewed Facility Operating Licenses NPF-35 and amendment No. 210 to Renewed Facility Operating Licenses NPF-52 for the Catawba Nuclear Station, Units 1 and 2".

7.1.2 Postulated Pipe Failures (Item Number Series G02.001.)

Augmented inservice inspection to protect against postulated piping failures shall comply with Final Safety Analysis Report, Section 6.6.8, for Catawba Nuclear Station.

7.1.3 NRC Bulletin 88-08 Thermal Stress Piping in Reactor Coolant System (Item Number Series G03.001.)

Ultrasonic inspection will be performed on specified Class 1 Piping Welds and Bends per NRC Bulletin 88-08. The affected areas are shown on the following isometrics:

UNIT 2

CN-2NC-140, CN-2NC-141, CN-2NC-145, CN-2NC-146

7.1.4 Unguarded Containment Sump Suction Line Piping weld (Item Number Series G04.001.)

Augmented inservice inspection will be performed on as specified Class 2 NI System Piping Weld per 12/1/89 UFSAR Table 1.8-1 (Page 49). See Inservice Inspection Plan Examination Request No. ER-CNS-00-01.

7.1.5 Augmented Inservice Inspection of RPV Head Penetration Nozzle by Ultrasonic Examination (Item Number Series G05.001.)

NRC Order EA-03-009 requires ultrasonic testing of each RPV head penetration nozzle. This covers Unit 2 Outages EOC-15 and EOC-19 (3rd Interval), EOC-23 and EOC-27 (4th Interval). For additional information, contact Nuclear GO Metallurgy & Lab Services. (See QA-513J Request Form, dated 10/30/2003).

7.1.6 Augmented Inservice Inspection of Bare Metal Visual Examination of 100% of the Reactor Pressure Vessel Head Surface (including 360 degree's around each RPV Head Penetration Nozzle. (Item Number Series G05.001.)

NRC Order EA-03-009 requires bare metal visual examination of the reactor pressure vessel head surface (including 360 degrees around each RPV head penetration nozzle). This covers Unit 2 Outages EOC-15, EOC-18, and EOC-21 (3rd Interval), EOC-24 and EOC-27 (4th Interval). For additional information, contact Nuclear GO Metallurgy & Lab Services. (See QA-513J Request Form, dated 10/30/2003).

7.1.7 Augmented Inservice Inspection. Bare Metal Visual Examination by VT-2 qualified inspector around 100% of each Pressurizer penetration and steam space piping connection containing Alloy 600 base metal or Alloy 82/182 weld metal per the requirements of Catawba response to Bulletin 2004-01. This includes examination of the gap between the Pressurizer manway cover and manway for evidence of diaphragm plate seal weld leakage.

Examination Frequency/Duration: Beginning EOC14 and each refueling outage (Item Number Series G06.001.). When developing the fourth

Interval ISI Plan, personnel from Metallurgy and Lab services shall be consulted to determine if the examinations are to be continued.

Note: Item Numbers G06.001.001 thru G06.001.006 are being examined to meet the requirements of Catawba response to Bulletin 2004-01 as well as the MRP-139 (G08.001) requirements. These item numbers should not be deleted unless both requirements have been satisfied.

7.1.8 Augmented Inservice Inspection. Ultrasonic examination of the Pressurizer Surge Nozzle to Stainless Steel Safe End Weld and Butter, Pressurizer Relief Nozzle to Stainless Steel Safe End Weld and Butter, Pressurizer Safety Nozzles to Stainless Steel Safe End Weld and Butter, and the Pressurizer Spray Nozzle to Stainless Steel Safe End Weld and Butter. Examination Frequency/Duration: Beginning EOC15 and every 5 years. Period between examinations can be shortened, but not lengthened (Item Number Series G07.001.). When developing the Fourth Interval ISI Plan, personnel from Metallurgy and Lab Services shall be consulted to determine if the examinations are to be continued.

Augmented Inservice Inspection. Ultrasonic examination of the 4 Reactor Vessel Primary Outlet Nozzles Weld and Butter. Examination Frequency/Duration: Beginning EOC16 and every 5 years. Period between examinations can be shortened, but not lengthened. (Item Number Series G07.002.). When developing the Fourth Interval ISI Plan, personnel from Metallurgy and Lab Services shall be consulted to determine if the examinations are to be continued.

Augmented Inservice Inspection. Ultrasonic examination of the 4 Reactor Vessel Primary Inlet Nozzles Weld and Butter. Examination Frequency/Duration: Beginning EOC15 and every 6 years. Period between examinations can be shortened, but not lengthened. (Item Number Series G07.003.). When developing the Fourth Interval ISI Plan, personnel from Metallurgy and Lab Services shall be consulted to determine if the examinations are to be continued.

Augmented Inservice Inspection. Ultrasonic examination of the 4 Reactor Vessel SB-167 Safe End to Auxiliary Head Adapter CS Nozzle. 82/182 cladding and SS Tube Welds. Examination Frequency/Duration: Beginning EOC15 and every 6 years. Period between examinations can be shortened, but not lengthened. (Item Number Series G07.004.). When developing the Fourth Interval ISI Plan, personnel from Metallurgy and Lab Services shall be consulted to determine if the examinations are to be continued.

7.1.9 Augmented Inservice Inspection. Bare Metal Visual Examination by VT-2 qualified inspector per the requirements of MRP-139 of: The Pressurizer Surge Nozzle to Stainless Steel Safe End Weld and Butter, the Pressurizer Relief Nozzle to Stainless Steel Safe End Weld and Butter,

the Pressurizer Safety Nozzles to Stainless Steel Safe End Weld and Butter, the Pressurizer Spray Nozzle to Stainless Steel Safe End Weld and Butter and the 4 Reactor Vessel Primary Outlet Nozzle Weld and Butter. Examination Frequency/Duration: Beginning EOC15 and each refueling outage. Period between examinations can be shortened, but not lengthened (Item Number Series G08.001. and G08.002.). When developing the Fourth Interval ISI Plan, personnel from Metallurgy and Lab Services shall be consulted to determine if the examinations are to be continued.

Note: Item Numbers G08.001.001 thru G08.001.006 are being examined to meet the MRP-139 requirements, as well as the Catawba response to Bulletin 2004-01 (G06.001.). These item numbers should not be deleted unless both requirements have been satisfied.

Augmented Inservice Inspection. Bare Metal Visual Examination by VT-2 qualified inspector per the requirements of MRP-139 of the 4 Reactor Vessel Primary Inlet Nozzle Weld and Butter and the 4 Reactor Vessel SB-167 Safe End to Auxiliary Head Adapter CS Nozzle 82/182 cladding & SS Tube Welds. Examination Frequency/Duration: Beginning EOC15 and once every 3 RFO. Period between examinations can be shortened, but not lengthened. (Item Number Series G08.003. and G08.004.). When developing the Fourth Interval ISI Plan, personnel from Metallurgy and Lab Services shall be consulted to determine if the examinations are to be continued.

7.1.10 NI Cold Leg Accumulator Welds Subject to Unanalyzed Thermal Transients (Item Number Series H01.001.)

Ultrasonic inspection will be performed on specified Class 1 Piping Welds per Inservice Inspection Plan Examination Request No. ER-CNS-99-01.

7.1.11 Welded attachment 2-R-NC-1929 – Surface examination (Item Number Series H02.001.)

Surface examination will be performed on specified Class 1 Welded Attachment per Inservice Inspection Plan Examination Request No. ER-CNS-99-02.

8.0 Description of Examination Listings

All ASME Class 1, 2, and 3 systems and components have been reviewed to determine the inservice examination requirements for Catawba Unit 2 Examination Listing and Schedules referenced by this section were written in accordance with the criteria found in Sections 3.0, 4.0, 5.0, 6.0 and 7.0 of this Plan.

For administrative purposes, the printouts identifying NDE examinations to be performed during each Refueling Outage that accompany this ISI Plan will reflect the refueling outages as shown below. These numbers will correlate back to the End of Cycles Number for Unit 2.

Unit 2

Outage No.	1	2	3	4	5	6	7
End of Cycle No.	14	15	16	17	18	19	20

8.1 Examination Information

The following information is listed for each examination where applicable:

8.1.1 Item Number

The Item Number for each examination is composed of three sections. The first two sections of the item number for ASME Class 1, Class 2, and Class 3 items are similar to Item numbers assigned in Tables IWB-2500-1, IWC-2500-1 and IWD-2500-1 of Section XI. Example B09.011.001

Item Numbers for Class 1, 2, and 3 piping supports (IWF-2500-1) are identified as follows:

Class 1

F01.010	=	Category A	(rods in one direction only)
F01.011	=	Category B	(multi-directional hangers)
F01.012	=	Category C	(thermal movement, i.e. springs, snubbers and constant supports)

Class 2

F01.020	=	Category A	(rods in one direction only)
F01.021	=	Category B	(multi-directional hangers)
F01.022	=	Category C	(thermal movement, i.e. springs, snubbers and constant supports)

Class 3

F01.030	=	Category A	(rods in one direction only)
F01.031	=	Category B	(multi-directional hangers)
F01.032	=	Category C	(thermal movement, i.e. springs, snubbers and constant supports)

The last section of the Item Number is made up by a three or four character sequence to uniquely identify that inspection. Example F01.020.001.

8.1.2 ID Number

The ID Number is selected so that, by using the specified reference drawing(s) and any applicable comments, the area to be examined can be accurately identified. Several different weld identification systems were used by various equipment vendors. A consistent system of weld or component identification has been developed and is described below:

8.1.2.1 The first character of each ID Number indicates the Unit to which the examination applies.

8.1.2.2 The Unit Number is followed by two or three letters to indicate the component or system to be examined.

The abbreviations used are:

RPV	Reactor Pressure Vessel
PZR	Pressurizer
SGA	Steam Generator A
SGB	Steam Generator B
SGC	Steam Generator C
SGD	Steam Generator D
RCP	Reactor Coolant Pump

CA	Auxiliary Feedwater System
CF	Main Feedwater System
FD	Diesel Generator Engine Fuel Oil System
FW	Refueling Water System
KC	Component Cooling System
KD	Diesel Generator Engine Cooling Water System
LD	Diesel Generator Engine Lube Oil System
NC	Reactor Coolant System
ND	Residual Heat Removal System
NI	Safety Injection System
NS	Containment Spray System
NV	Chemical and Volume Control System
RN	Nuclear Service Water System
SA	Auxiliary Steam System
SM	Main Steam System
SV	Main Steam Vent to Atmosphere System
TE	FDWP Turbine Exhaust System
VN	Diesel Generator Engine Air Intake & Exhaust System
YC	Control Area Chilled Water System
ANSHX	Containment Spray Heat Exchanger "A" Train
ARHRHX	Residual Heat Removal Heat Exchanger "A" Train
ASWINJF	Seal Water Injection Filter "A" Train
CBD	Cation Bed Demineralizer
CCPA	Centrifugal Charging Pump Support "A" Pump
CRD	CRD Housing

DGEJWLA	Diesel Generator Jacket Water
DGELOCA	Diesel Generator Engine Lube Oil Cooler
DGELOFA	Diesel Generator Engine Lube Oil Tank
DGLOSA1	Diesel Generator Engine Lube Oil Strainer
DGLOSTA	Diesel Generator Engine Lube Oil Sump Tank
DGPOSA	Diesel Generator Prelube Oil Strainer
DGEESA	Diesel Generator Engine Exhaust Silencer
DGEIAFA1	Diesel Generator Engine Intake Air Filter
ELDHX	Excess Letdown Heat Exchanger
FPCPA	Fuel Pool Cooling Pump ""
KCHXB	Component Cooling Pump Support "B" Pump
KCP	Component Cooling Pump Support Pump
KCSTA	Component Cooling Surge Tank
KFHXA	Fuel Pool Cooling Heat Exchanger Support "A" Exchanger
LDFB	Diesel Generator Lube Oil Filter Support "B" Filter
LDHX	Vertical Letdown Heat Exchanger
MBDA	Mixed Bed Demineralizer
MDCAPA	Motor Driven Aux. FDW Pump
NSHXB	Containment Spray Heat Exchanger Support "B" Exchanger
NSPA	Containment Spray Pump Support Legs "A" Pump
PDARCP	Pulsation Dampener Assembly Reciprocating Charging Pump
REGHX	Regenerative Heat Exchanger
RHRA	RHR Heat Exchanger Support Skirt "A" Exchanger
RHRPA	Residual Heat Removal Pump Lugs to Pump Casing "A" Pump

RNPA	Nuclear Service Water Pump Support "A" Pump
RNSB	Nuclear Service Water Strainer Support "B" Strainer
SIPA	Safety Injection Pump Support Legs "A"Pump
SWHX	Seal Water Heat Exchanger

8.1.2.3 The remainder of the ID Number will indicate the exact weld or component to be examined, as shown on the reference drawings. Additional information will be included in the comments space when necessary to positively identify the area to be examined.

8.1.3 Drawing Numbers

At least one Duke Drawing Number is listed for each examination, if available. Drawing numbers beginning with "CNM" are vendor's component drawings. Drawing numbers beginning with "CN-ISIN33-" followed by a four digit number are ISI boundary drawings. All listed drawings are available at Catawba Nuclear Station.

8.1.4 Location (Optional)

Location of Item: building, degree, elevation, axis, etc.

8.1.5 Inspection Required / Configuration (Pipe to Elbow, Valve to Pipe, Flange to Tee, etc.)

The following abbreviations are used to describe the type of inspection required for each item:

EVT-1	Enhanced VT-1 Inspection (ISI Visual Inspection)
PT	Liquid Penetrant Inspection
MT	Magnetic Particle Inspection
RT	Radiographic Inspection
UT	Ultrasonic Inspection
VT-1	ISI Visual Inspection
VT-3	ISI Visual Inspection (General Condition of Components and Supports)

8.1.6 Procedure

The procedures to be used for the examinations were selected by the NDE Level III, for the inspection methods discussed in Section 3 of this plan. The designation "TBD" (to be determined) is used to indicate cases where the procedure is yet to be determined.

8.1.7 Material Type/Grade

The following abbreviations are used to indicate the type of material to be examined:

CS Carbon Steel

SS Stainless Steel

IN Inconel

8.1.8 Diameter

The nominal pipe size (NPS) is listed for all valves and piping welds up to 24-inch NPS. The nominal inside diameter is listed for all vendor supplied piping larger than 24-in NPS. The actual outside diameter is listed for all other piping welds.

The nominal outside diameter is listed for examinations of bolts and studs.

For integrally-welded supports or cladding, the smaller weld or area dimension is listed in this category.

8.1.9 Thickness

The dimension listed for component or piping welds is the nominal thickness at the weld.

The overall length of bolts or studs is listed in this category when applicable.

The dimension listed for support attachment welds is the thickness of the attachment base material.

8.1.10 Calibration Block

The calibration block(s) to be used for the UT examinations were selected by the NDE Level III, from the calibration block listing shown in Section 10 of this plan. The designation "TBD" is used to indicate cases where the calibration block is still being designed and / or fabricated.

8.1.11 Comments

Additional information about the specified examination will be included here when needed.

8.2 Examination Listings

The detailed examination listing and schedule are found in the Unit 2 volume of this plan.

9.0 Requests for Relief from ASME Code Requirements

Each request for relief from a requirement of the ASME Section XI Code specified in Section 1 of this plan will be submitted to the Nuclear Regulatory Commission for approval by either the General Office Nuclear Assessments and Issues Division or the Station Regulatory Compliance Section of the Nuclear Generation Department. The list below contains all requests for relief that affect Inservice Inspection at Catawba Nuclear Station. For a listing of requests for relief pertaining to topics other than Inservice Inspection, contact the Catawba Nuclear Station Regulatory Compliance Section.

Serial Number	Description	Units Affected	Date RFR Submitted	Date SER Approved	Comments
TBD	Request for Alternative to IWF-5000 OM -1987, Part 4, Snubber Examinations.	2	TBD	TBD	TBD
TBD	Request for Relief from Volumetric Weld Inspection Requirements	1 & 2	TBD	TDB	TBD
TBD	Relief from Volumetric Examination Requirements on Regenerative Heat Exchangers	1 & 2	TBD	TBD	TBD
TBD	Pressurizer Integrally Welded Attachments	1 & 2	TBD	TBD	TBD

10.0 Calibration Standards

10.1 Ultrasonic Calibration Standards

10.1.1 Calibration standards are prepared for each UT inspection listed in the detailed inspection listings of this plan. All calibration standards are designed in accordance with the requirements of ASME Section XI.

10.1.2 Catawba third ten year inspection interval intermediate Reactor Pressure Vessel examinations will be performed using the calibration blocks listed in the Inservice Inspection Plan

10.1.3 Calibration standards for UT inspection shall be selected per the Calibration Block Listing. The number of the calibration standard used shall be recorded on the inspection data.

10.1.4 Procedure NDE-600 is written to meet the requirements of Appendix VIII and does not require the use of a calibration block. In cases where NDE-600 is specified for use, the calibration block field will be empty. NDE-600 is for the examination of similar metal piping welds e.g., stainless to stainless pipe welds and carbon to carbon pipe welds.

10.2 Eddy Current Calibration Standards

Eddy Current calibration standards are maintained by the Metallurgy and Lab Services Section/Nuclear Technical Services Division. Eddy Current Examinations for Steam Generator tubing are scheduled and performed per the Catawba Improved Technical Specifications.

10.3 Calibration Standard Description

The Catawba Calibration Block Listing found in this section contains information concerning each calibration standard to be used for the inservice inspection of Catawba Unit 2.

Duke Power Company

Quality Assurance Technical Services

Inservice Inspection Plan For:

Catawba Unit 2

Interval 3

Calibration Block Listing

Revision 0

Code Year 1998

Report order: Block no.
Plant(s): CN2

DUKE ENERGY CORPORATION
QUALITY ASSURANCE TECHNICAL SERVICES
Inservice Inspection Database Management System
Calibration Block Listing

BLOCK NO.	TYPE	DESCRIPTION	CODE REQ	MATERIAL TYPE/GRADE	DIAM SIZE	THICKNESS (LENGTH)	COMMENTS
40387	PLATE	6" x 7" x 28" SA508 CL.2	98/00A	CS	0.000	7.000	Heat # 158025C-1 SS Clad
50202	PIPE	1.5 Inch Sch.160 SA 376 T304	98/00A	SS	1.900	0.281	Heat # 08574 NRC Bulletin 88-08
50209	PIPE	10" SCH 140 SA376 T316	98/00A	SS	10.750	1.000	Heat # 54865
50211	PIPE	6 Inch Sch. 160 SA376 T304	98/00A	SS	6.650	0.719	Heat # C7948
50214	PIPE	ID 31" DIAMETER SA351 CF8A	98/00A	SS	0.000	2.464	Heat # 143302
50235	FORGING	6 x 9 x 27 SA 508 CL 2	98/00A	CS	0.000	9.000	Heat # 123L418 CS With SS Clad
50236A	PLATE	15" x 4" x 6" SA508	98/00A	CS	0.000	6.125	Heat # 123L418
50237	FORGING	25" x 20" x 9" SA508 Forging	98/00A	CS	0.000	9.000	Heat # CZS123L418
50237B	FORGING	5" x 6" x 12" SA508 CL.2	98/00A	CS	0.000	5.000	Heat # CZS123L418
50237D	FORGING	2.75 x 7.348 x 7.263 SA508 CL2	98/00A	CS	0.000	7.348	Heat # CZS123L418
50301	PLATE	5 X 6 X 15 SA533 GR.B CL.1	98/00A	CS	0.000	5.000	Heat # CZS870 SS Clad# L3541
50310	PIPE	8 Inch Sch. 40 SA 312 T304	98/00A	SS	8.630	0.322	Heat # 28569
50312	PIPE	10 Inch Sch. 140 SA376 T316	98/00A	SS	10.750	1.000	Heat # 535487 Pc. # 2598-4-2

DUKE ENERGY CORPORATION
QUALITY ASSURANCE TECHNICAL SERVICES
Inservice Inspection Database Management System
Calibration Block Listing

BLOCK NO.	TYPE	DESCRIPTION	CODE REQ	MATERIAL TYPE/GRADE	DIAM SIZE	THICKNESS (LENGTH)	COMMENTS
50319	PIPE	6" Sch. 80 SA312 SS304	98/00A	SS	6.625	0.432	Heat # F81032
50331	PIPE	6" SCH 80 SA106 GR.B	98/00A	CS	6.630	0.432	Heat # N33954
50337	PLATE	4.2" x 6" x 15" SA533 GR.A CL.	98/00A	CS	0.000	4.200	Heat # B7401-1 SS Clad
50338	PLATE	3" x 6" x 15" SA533 GR.A CL.	98/00A	CS	0.000	3.000	Heat # B7401-1 CS With SS Clad
50354	VALVE	20 Inch x 2.043 SA 182 F 316L	98/00A	SS	20.000	2.031	Heat # D-42 ND Valve Body Welds (12 In. NPS)
50366	PLATE	3.9 X 6 X 15 SA533 GR.A CL.2	98/00A	CS	0.000	3.900	Heat # C-4183-2
50374	PIPE	6.25" x .625" Inconel SB-167	98/00A	Inconel	6.250	0.625	Heat # 2155-2-3495
50376	PLATE	6" x 7" x 28" SA533 GR.B CL.	98/00A	CS	0.000	7.000	Heat # C0569-2 Code # B8604-3 SS Clad (Curved)
50380	PLATE	.750 x 6 x 12 SA 240 Type 304	98/00A	SS	0.000	0.750	Heat # 28676 RHR Heat Exchanger Shell
50386	PIPE	29 ID x 2.48 SA 351 CF8A	98/00A	SS	31.000	2.480	Heat # 152183 Centrifugally Cast SS
50420	PLATE	6 X 12 X .479 SA182 F304	98/00A	SS	0.000	0.479	Letdown Heat Exchanger
50432	PIPE	14" STANDARD WALL SA403 WP304	98/00A	SS	14.000	0.375	
50501	REACTOR VESSEL STUD	64.594" x 6.697" SA540 GR.B-2	98/00A	CS	6.690	0.000	Heat # 61880

DUKE ENERGY CORPORATION
QUALITY ASSURANCE TECHNICAL SERVICES
Inservice Inspection Database Management System
Calibration Block Listing

BLOCK NO.	TYPE	DESCRIPTION	CODE REQ	MATERIAL TYPE/GRADE	DIAM SIZE	THICKNESS (LENGTH)	COMMENTS
50502	STUD	30.6" X 4.375" SA 540 GR. B24	98/00A	CS	4.375	30.600	Heat # 99137 RCP Stud (Hex-Head)
CB-08-99	Plate	SA-516 GR70	98/A00	CS	0.000	60.000	60" X 38.84" X 8" plate with 3/16 inch SS cladding.
CB01163	SA 508 Cl. 2	Forging	98/00A	CS	0.000	3.560	SA 508 Cl. 2 with 308/309 SS Cladding (Chemical Analysis - See Stork Herron Testing Laborties Report)
CB07-155	FORGING	13.839 x 14.021 x 6.997	98/00A	CS	0.000	0.000	SA 508 CL 2
CB0803	PIPE	9.50 X .750 SA106 GR.C (SMLS)	98/00A	CS	9.500	0.750	Excess Letdown Heat Exchanger 3/16" 304 SS Cladding

THIRD INTERVAL INSERVICE INSPECTION PLAN

CATAWBA NUCLEAR STATION UNIT 2

REVISION 0

Duke Power SM

A Duke Energy Company

A.J. Hogge, Jr.
(704) 382-5110
ajhogge@duke-energy.com

J.E.Cherry
(704) 382-5055
jecherry@duke-energy.com

CATAWBA NUCLEAR STATION UNIT 2

Inservice Inspection Examination Listing and Schedule

Section 1

Revision 0

The detailed inspection plans for Inservice Inspection of Catawba Unit 2 are maintained in this volume. Section 1 contains the examination listing and Section 2 contains a listing of reference drawings.

Duke Power Company

Quality Assurance Technical Services

Inservice Inspection Plan For:

Catawba Unit 2

Interval 3

ISI Outage 1

Refueling Outage EOC 14

ISI Inspection Listing

Revision 0

CATEGORY B-A, Pressure Retaining Welds In Reactor Vessel

Head Welds

DUKE ENERGY CORPORATION
INSERVICE INSPECTION PLAN MANAGEMENT
Inservice Inspection Database Management System
Catawba 2
Inservice Inspection Plan for Interval 3 Outage 1

ITEM NUMBER	ID NUMBER	SYS	ISO/DWG NUMBERS	PROC	INSP REQ	MAT/SCH	DIA/THK	CAL BLOCKS	COMMENTS
****** Meridional ******									
B01.021.002	2RPV-102-101		CNM 2201.01-0051	NDE-620	UT	CS	0.000	50236A	Upper Head Weld.
	Circumferential	NC	CNM 2201.01-67				7.000	50376	
Class A			CNM 2201.01-0205		Head to Head				
Total B01.021 Items:	**1**								
B01.022.001	2RPV-101-104A		CNM 2201.01-0051	NDE-620	UT	CS	0.000	50236A	Upper Head Meridional Weld At 0 Degrees.
		NC	CNM 2201.01-0205				7.000	50376	
Class A					Head to Head				
B01.022.002	2RPV-101-104B		CNM 2201.01-0051	NDE-620	UT	CS	0.000	50236A	Upper Head Meridional Weld At 90 Degrees.
		NC	CNM 2201.01-0205				7.000	50376	
Class A					Head to Head				
B01.022.003	2RPV-101-104C		CNM 2201.01-0051	NDE-620	UT	CS	0.000	50236A	Upper Head Meridional Weld At 180 Degrees.
		NC	CNM 2201.01-0205				7.000	50376	
Class A					Head to Head				
B01.022.004	2RPV-101-104D		CNM 2201.01-0051	NDE-620	UT	CS	0.000	50236A	Upper Head Meridional Weld At 270 Degrees.
		NC	CNM 2201.01-0205				7.000	50376	
Class A					Head to Head				
Total B01.022 Items:	**4**								

CATEGORY B-A, Pressure Retaining Welds In Reactor Vessel

Repair Welds

DUKE ENERGY CORPORATION
INSERVICE INSPECTION PLAN MANAGEMENT
Inservice Inspection Database Management System
Catawba 2
Inservice Inspection Plan for Interval 3 Outage 1

ITEM NUMBER	ID NUMBER	SYS	ISO/DWG NUMBERS	PROC	INSP REQ	MAT/SCH	DIA/THK	CAL BLOCKS	COMMENTS
B01.040.001	2RPV-101-101		CNM 2201.01-0051	NDE-820	UT	CS	0.000	50376	Upper Head To Flange.
	Circumferential	NC	CNM 2201.01-67				7.000		
Class A			CNM 2201.01-0205		Head to Flange				
B01.040.001A	2RPV-101-101		CNM 2201.01-0051	NDE-25	MT	CS	0.000		Upper Head To Flange.
	Circumferential	NC	CNM 2201.01-67				7.000		
Class A			CNM 2201.01-0205		Head to Flange				

Total B01.040 Items: 2

Total B01 Items: 7

DUKE ENERGY CORPORATION
INSERVICE INSPECTION PLAN MANAGEMENT
Inservice Inspection Database Management System
Catawba 2
Inservice Inspection Plan for Interval 3 Outage 1

CATEGORY B-G-1, Pressure Retaining Bolting, Greater Than 2 in. In Diameter

Reactor Vessel

ITEM NUMBER	ID NUMBER	SYS	ISO/DWG NUMBERS	PROC	INSP REQ	MAT/SCH	DIA/THK	CAL BLOCKS	COMMENTS
**** Closure Studs, in place ****									
B06.010.001	2RPV-179-102-01		E 8871-179-001	QAL-13	VT-1	CS	10.580		Reactor Vessel Closure Head Nut.
		NC	CNM 2201.01-67				1.857		
Class A									
B06.010.002	2RPV-179-102-02A		E 8871-179-001	QAL-13	VT-1	CS	10.580		Reactor Vessel Closure Head Nut.
		NC	CNM 2201.01-67				1.857		
Class A									
B06.010.003	2RPV-179-102-03		E 8871-179-001	QAL-13	VT-1	CS	10.580		Reactor Vessel Closure Head Nut.
		NC	CNM 2201.01-67				1.857		
Class A									
B06.010.004	2RPV-179-102-04		E 8871-179-001	QAL-13	VT-1	CS	10.580		Reactor Vessel Closure Head Nut.
		NC	CNM 2201.01-67				1.857		
Class A									
B06.010.005	2RPV-179-102-05A		E 8871-179-001	QAL-13	VT-1	CS	10.580		Reactor Vessel Closure Head Nut.
		NC	CNM 2201.01-67				1.857		
Class A									
B06.010.006	2RPV-179-102-S1		E 8871-179-001	QAL-13	VT-1	CS	10.580		Reactor Vessel Closure Head Nut.
		NC	CNM 2201.01-67				1.857		
Class A									
B06.010.007	2RPV-179-102-07		E 8871-179-001	QAL-13	VT-1	CS	10.580		Reactor Vessel Closure Head Nut.
		NC	CNM 2201.01-67				1.857		
Class A									
B06.010.008	2RPV-179-102-08A		E 8871-179-001	QAL-13	VT-1	CS	10.580		Reactor Vessel Closure Head Nut.
		NC	CNM 2201.01-67				1.857		
Class A									

DUKE ENERGY CORPORATION
INSERVICE INSPECTION PLAN MANAGEMENT
Inservice Inspection Database Management System

Catawba 2

Inservice Inspection Plan for Interval 3 Outage 1

CATEGORY B-G-1, Pressure Retaining Bolting, Greater Than 2 in. In Diameter

Reactor Vessel

ITEM NUMBER	ID NUMBER	SYS	ISO/DWG NUMBERS	PROC	INSP REQ	MAT/SCH	DIA/THK	CAL BLOCKS	COMMENTS
B06.010.009	2RPV-179-102-09A		E 8871-179-001	QAL-13	VT-1	CS	10.580		Reactor Vessel Closure Head Nut.
		NC	CNM 2201.01-67				1.857		
Class A									
B06.010.010	2RPV-179-102-10		E 8871-179-001	QAL-13	VT-1	CS	10.580		Reactor Vessel Closure Head Nut.
		NC	CNM 2201.01-67				1.857		
Class A									
B06.010.011	2RPV-179-102-11		E 8871-179-001	QAL-13	VT-1	CS	10.580		Reactor Vessel Closure Head Nut.
		NC	CNM 2201.01-67				1.857		
Class A									
B06.010.012	2RPV-179-102-12		E 8871-179-001	QAL-13	VT-1	CS	10.580		Reactor Vessel Closure Head Nut.
		NC	CNM 2201.01-67				1.857		
Class A									
B06.010.013	2RPV-179-102-13A		E 8871-179-001	QAL-13	VT-1	CS	10.580		Reactor Vessel Closure Head Nut.
		NC	CNM 2201.01-67				1.857		
Class A									
B06.010.014	2RPV-179-102-14		E 8871-179-001	QAL-13	VT-1	CS	10.580		Reactor Vessel Closure Head Nut.
		NC	CNM 2201.01-67				1.857		
Class A									
B06.010.015	2RPV-179-102-15		E 8871-179-001	QAL-13	VT-1	CS	10.580		Reactor Vessel Closure Head Nut.
		NC	CNM 2201.01-67				1.857		
Class A									
B06.010.016	2RPV-179-102-16		E 8871-179-001	QAL-13	VT-1	CS	10.580		Reactor Vessel Closure Head Nut.
		NC	CNM 2201.01-67				1.857		
Class A									
B06.010.017	2RPV-179-102-17		E 8871-179-001	QAL-13	VT-1	CS	10.580		Reactor Vessel Closure Head Nut.
		NC	CNM 2201.01-67				1.857		
Class A									

CATEGORY B-G-1, Pressure Retaining Bolting, Greater Than 2 in. In Diameter

Reactor Vessel

ITEM NUMBER	ID NUMBER	SYS	ISO/DWG NUMBERS	PROC	INSP REQ	MAT/SCH	DIA/THK	CAL BLOCKS	COMMENTS
B06.010.018	2RPV-179-102-18		E 8871-179-001	QAL-13	VT-1	CS	10.580		Reactor Vessel Closure Head Nut.
		NC	CNM 2201.01-67				1.857		
Class A									

Total B06.010 Items: 18

CATEGORY B-G-1, Pressure Retaining Bolting, Greater Than 2 in. In Diameter

Reactor Vessel

ITEM NUMBER	ID NUMBER	SYS	ISO/DWG NUMBERS	PROC	INSP REQ	MAT/SCH	DIA/THK	CAL BLOCKS	COMMENTS
**** Threads in Flange ****									
B06.030.001	2RPV-179-101-01		E 8871-179-001	PDI-UT-5	UT	CS	7.000	50501	Reactor Vessel Closure Head Stud.
		NC	CNM 2201.01-67				57.688		
Class A									
B06.030.002	2RPV-179-101-02A		E 8871-179-001	PDI-UT-5	UT	CS	7.000	50501	Reactor Vessel Closure Head Stud.
		NC	CNM 2201.01-67				57.688		
Class A									
B06.030.003	2RPV-179-101-03		E 8871-179-001	PDI-UT-5	UT	CS	7.000	50501	Reactor Vessel Closure Head Stud.
		NC	CNM 2201.01-67				57.688		
Class A									
B06.030.004	2RPV-179-101-04		E 8871-179-001	PDI-UT-5	UT	CS	7.000	50501	Reactor Vessel Closure Head Stud.
		NC	CNM 2201.01-67				57.688		
Class A									
B06.030.005	2RPV-179-101-05A		E 8871-179-001	PDI-UT-5	UT	CS	7.000	50501	Reactor Vessel Closure Head Stud.
		NC	CNM 2201.01-67				57.688		
Class A									
B06.030.006	2RPV-179-101-S1		E 8871-179-001	PDI-UT-5	UT	CS	7.000	50501	Reactor Vessel Closure Head Stud.
		NC	CNM 2201.01-67				57.688		
Class A									
B06.030.007	2RPV-179-101-07		E 8871-179-001	PDI-UT-5	UT	CS	7.000	50501	Reactor Vessel Closure Head Stud.
		NC	CNM 2201.01-67				57.688		
Class A									
B06.030.008	2RPV-179-101-08		E 8871-179-001	PDI-UT-5	UT	CS	7.000	50501	Reactor Vessel Closure Head Stud.
		NC	CNM 2201.01-67				57.688		
Class A									

CATEGORY B-G-1, Pressure Retaining Bolting, Greater Than 2 in. In Diameter

Reactor Vessel

ITEM NUMBER	ID NUMBER	SYS	ISO/DWG NUMBERS	PROC	INSP REQ	MAT/SCH	DIA/THK	CAL BLOCKS	COMMENTS
B06.030.009	2RPV-179-101-09		E 8871-179-001	PDI-UT-5	UT	CS	7.000	50501	Reactor Vessel Closure Head Stud.
		NC	CNM 2201.01-67				57.688		
Class A									
B06.030.010	2RPV-179-101-10		E 8871-179-001	PDI-UT-5	UT	CS	7.000	50501	Reactor Vessel Closure Head Stud.
		NC	CNM 2201.01-67				57.688		
Class A									
B06.030.011	2RPV-179-101-11		E 8871-179-001	PDI-UT-5	UT	CS	7.000	50501	Reactor Vessel Closure Head Stud.
		NC	CNM 2201.01-67				57.688		
Class A									
B06.030.012	2RPV-179-101-12		E 8871-179-001	PDI-UT-5	UT	CS	7.000	50501	Reactor Vessel Closure Head Stud.
		NC	CNM 2201.01-67				57.688		
Class A									
B06.030.013	2RPV-179-101-13		E 8871-179-001	PDI-UT-5	UT	CS	7.000	50501	Reactor Vessel Closure Head Stud.
		NC	CNM 2201.01-67				57.688		
Class A									
B06.030.014	2RPV-179-101-14		E 8871-179-001	PDI-UT-5	UT	CS	7.000	50501	Reactor Vessel Closure Head Stud.
		NC	CNM 2201.01-67				57.688		
Class A									
B06.030.015	2RPV-179-101-15		E 8871-179-001	PDI-UT-5	UT	CS	7.000	50501	Reactor Vessel Closure Head Stud.
		NC	CNM 2201.01-67				57.688		
Class A									
B06.030.016	2RPV-179-101-16		E 8871-179-001	PDI-UT-5	UT	CS	7.000	50501	Reactor Vessel Closure Head Stud.
		NC	CNM 2201.01-67				57.688		
Class A									
B06.030.017	2RPV-179-101-17		E 8871-179-001	PDI-UT-5	UT	CS	7.000	50501	Reactor Vessel Closure Head Stud.
		NC	CNM 2201.01-67				57.688		
Class A									

CATEGORY B-G-1, Pressure Retaining Bolting, Greater Than 2 in. In Diameter

Reactor Vessel

ITEM NUMBER	ID NUMBER	SYS	ISO/DWG NUMBERS	PROC	INSP REQ	MAT/SCH	DIA/THK	CAL BLOCKS	COMMENTS
B06.030.018	2RPV-179-101-18		E 8871-179-001	PDI-UT-5	UT	CS	7.000	50501	Reactor Vessel Closure Head Stud.
		NC	CNM 2201.01-67				57.688		
Class A									

Total B06.030 Items: 18

CATEGORY B-G-1, Pressure Retaining Bolting, Greater Than 2 in. In Diameter

Pressurizer

ITEM NUMBER	ID NUMBER	SYS	ISO/DWG NUMBERS	PROC	INSP REQ	MAT/SCH	DIA/THK	CAL BLOCKS	COMMENTS
**** Bolts and Studs ****									
B06.050.001	2RPV-179-103-01		E 8871-179-001	QAL-13	VT-1	CS	10.560		Reactor Vessel Closure Head Washer.
		NC	CNM 2201.01-67				1.719		
Class A									
B06.050.002	2RPV-179-103-02A		E 8871-179-001	QAL-13	VT-1	CS	10.560		Reactor Vessel Closure Head Washer.
		NC	CNM 2201.01-67				1.719		
Class A									
B06.050.003	2RPV-179-103-03		E 8871-179-001	QAL-13	VT-1	CS	10.560		Reactor Vessel Closure Head Washer.
		NC	CNM 2201.01-67				1.719		
Class A									
B06.050.004	2RPV-179-103-04		E 8871-179-001	QAL-13	VT-1	CS	10.560		Reactor Vessel Closure Head Washer.
		NC	CNM 2201.01-67				1.719		
Class A									
B06.050.005	2RPV-179-103-05A		E 8871-179-001	QAL-13	VT-1	CS	10.560		Reactor Vessel Closure Head Washer.
		NC	CNM 2201.01-67				1.719		
Class A									
B06.050.006	2RPV-179-103-S1		E 8871-179-001	QAL-13	VT-1	CS	10.560		Reactor Vessel Closure Head Washer.
		NC	CNM 2201.01-67				1.719		
Class A									
B06.050.007	2RPV-179-103-07		E 8871-179-001	QAL-13	VT-1	CS	10.560		Reactor Vessel Closure Head Washer.
		NC	CNM 2201.01-67				1.719		
Class A									
B06.050.008	2RPV-179-103-08		E 8871-179-001	QAL-13	VT-1	CS	10.560		Reactor Vessel Closure Head Washer.
		NC	CNM 2201.01-67				1.719		
Class A									

CATEGORY B-G-1, Pressure Retaining Bolting, Greater Than 2 in. In Diameter

Pressurizer

ITEM NUMBER	ID NUMBER	SYS	ISO/DWG NUMBERS	PROC	INSP REQ	MAT/SCH	DIA/THK	CAL BLOCKS	COMMENTS
B06.050.009	2RPV-179-103-09		E 8871-179-001	QAL-13	VT-1	CS	10.560		Reactor Vessel Closure Head Washer.
		NC	CNM 2201.01-67				1.719		
Class A									
B06.050.010	2RPV-179-103-10		E 8871-179-001	QAL-13	VT-1	CS	10.560		Reactor Vessel Closure Head Washer.
		NC	CNM 2201.01-67				1.719		
Class A									
B06.050.011	2RPV-179-103-11		E 8871-179-001	QAL-13	VT-1	CS	10.560		Reactor Vessel Closure Head Washer.
		NC	CNM 2201.01-67				1.719		
Class A									
B06.050.012	2RPV-179-103-12		E 8871-179-001	QAL-13	VT-1	CS	10.560		Reactor Vessel Closure Head Washer.
		NC	CNM 2201.01-67				1.719		
Class A									
B06.050.013	2RPV-179-103-13A		E 8871-179-001	QAL-13	VT-1	CS	10.560		Reactor Vessel Closure Head Washer.
		NC	CNM 2201.01-67				1.719		
Class A									
B06.050.014	2RPV-179-103-14		E 8871-179-001	QAL-13	VT-1	CS	10.560		Reactor Vessel Closure Head Washer.
		NC	CNM 2201.01-67				1.719		
Class A									
B06.050.015	2RPV-179-103-15		E 8871-179-001	QAL-13	VT-1	CS	10.560		Reactor Vessel Closure Head Washer.
		NC	CNM 2201.01-67				1.719		
Class A									
B06.050.016	2RPV-179-103-16		E 8871-179-001	QAL-13	VT-1	CS	10.560		Reactor Vessel Closure Head Washer.
		NC	CNM 2201.01-67				1.719		
Class A									
B06.050.017	2RPV-179-103-17		E 8871-179-001	QAL-13	VT-1	CS	10.560		Reactor Vessel Closure Head Washer.
		NC	CNM 2201.01-67				1.719		
Class A									

CATEGORY B-G-1, Pressure Retaining Bolting, Greater Than 2 in. In Diameter

Pressurizer

ITEM NUMBER	ID NUMBER	SYS	ISO/DWG NUMBERS	PROC	INSP REQ	MAT/SCH	DIA/THK	CAL BLOCKS	COMMENTS
B06.050.018	2RPV-179-103-18		E 8871-179-001	QAL-13	VT-1	CS	10.560		Reactor Vessel Closure Head Washer.
		NC	CNM 2201.01-67				1.719		
Class A									

Total B06.050 Items: 18

CATEGORY B-G-1, Pressure Retaining Bolting, Greater Than 2 in. In Diameter

Pumps

ITEM NUMBER	ID NUMBER	SYS	ISO/DWG NUMBERS	PROC	INSP REQ	MAT/SCH	DIA/THK	CAL BLOCKS	COMMENTS
**** Nuts, Bushings, and Washers ****									
B06.190.001	2RCP-2A-FLANGE		CN-2NC-009	QAL-13	VT-1	SS	0.000		Reactor Colant Pump 2A Main Flange Surface.
		NC	CNM 2201.01-115				0.000		Examine When Connection Is Disassembled.
Class A									
B06.190.002	2RCP-2B-FLANGE		CN-2NC-011	QAL-13	VT-1	SS	0.000		Reactor Colant Pump 2B Main Flange Surface.
		NC	CNM 2201.01-115				0.000		Examine When Connection Is Disassembled.
Class A									
B06.190.003	2RCP-2C-FLANGE		CN-2NC-013	QAL-13	VT-1	SS	0.000		Reactor Colant Pump 2C Main Flange Surface.
		NC	CNM 2201.01-115				0.000		Examine When Connection Is Disassembled.
Class A									
B06.190.004	2RCP-2D-FLANGE		CN-2NC-015	QAL-13	VT-1	SS	0.000		Reactor Colant Pump 2D Main Flange Surface.
		NC	CNM 2201.01-115				0.000		Examine When Connection Is Disassembled.
Class A									

Total B06.190 Items: 4

Total B06 Items: 58

DUKE ENERGY CORPORATION
INSERVICE INSPECTION PLAN MANAGEMENT
Inservice Inspection Database Management System
Catawba 2
Inservice Inspection Plan for Interval 3 Outage 1

CATEGORY B-G-2, Pressure Retaining Bolting, 2 in. And Less In Diameter

NPS 4 or Larger

ITEM NUMBER	ID NUMBER	SYS	ISO/DWG NUMBERS	PROC	INSP REQ	MAT/SCH	DIA/THK	CAL BLOCKS	COMMENTS
B07.080.001	2CRD-HOUSING		CNM 2201.01-74/7	QAL-13	VT-1	SS	6.000		Threaded Housing With Seal Weld. Examine Only CRD Bolting That Is Resued When Housing Is Disassembled.
			CNM 2201.01-89				0.000		
Class A									

Total B07.080 Items: 1

Total B07 Items: 1

CATEGORY B-J, Pressure Retaining Welds In Piping

Less Than NPS 4

ITEM NUMBER	ID NUMBER	SYS	ISO/DWG NUMBERS	PROC	INSP REQ	MAT/SCH	DIA/THK	CAL BLOCKS	COMMENTS
B09.011.032 Class A	2NC24-11 Circumferential	NC	CN-2NC-24 CN-ISIN3-2553-1.1	NDE-600	UT Elbow to Pipe	SS 160	4.000 0.531	Component	Depending on the examiners qualifications, Procedure PDI-UT-2 may be used in lieu of NDE-600. If PDI-UT-2 is used, Calibration Block PDI-UT-2-C may be used.
B09.011.032A Class A	2NC24-11 Circumferential	NC	CN-2NC-24 CN-ISIN3-2553-1.1	NDE-35	PT Elbow to Pipe	SS 160	4.000 0.531		
B09.011.033 Class A	2NC24-17 Circumferential	NC	CN-2NC-24 CN-ISIN3-2553-1.1	NDE-600	UT Pipe to Elbow	SS 160	4.000 0.531	Component	Depending on the examiners qualifications, Procedure PDI-UT-2 may be used in lieu of NDE-600. If PDI-UT-2 is used, Calibration Block PDI-UT-2-C may be used.
B09.011.033A Class A	2NC24-17 Circumferential	NC	CN-2NC-24 CN-ISIN3-2553-1.1	NDE-35	PT Pipe to Elbow	SS 160	4.000 0.531		
B09.011.034 Class A	2NC24-7 Circumferential	NC	CN-2NC-24 CN-ISIN3-2553-1.1	NDE-600	UT Elbow to Reducer	SS 160	6.000 0.719	Component	Depending on the examiners qualifications, Procedure PDI-UT-2 may be used in lieu of NDE-600. If PDI-UT-2 is used, Calibration Block PDI-UT-2-C may be used.
B09.011.034A Class A	2NC24-7 Circumferential	NC	CN-2NC-24 CN-ISIN3-2553-1.1	NDE-35	PT Elbow to Reducer	SS 160	6.000 0.719		
B09.011.035 Class A	2NC24-8 Circumferential	NC	CN-2NC-24 CN-ISIN3-2553-1.1	NDE-600	UT Reducer to Pipe	SS 160	4.000 0.531	Component	Depending on the examiners qualifications, Procedure PDI-UT-2 may be used in lieu of NDE-600. If PDI-UT-2 is used, Calibration Block PDI-UT-2-C may be used.
B09.011.035A Class A	2NC24-8 Circumferential	NC	CN-2NC-24 CN-ISIN3-2553-1.1	NDE-35	PT Reducer to Pipe	SS 160	4.000 0.531		

CATEGORY B-J, Pressure Retaining Welds In Piping

Less Than NPS 4

Catawba 2

Inservice Inspection Plan for Interval 3 Outage 1

ITEM NUMBER	ID NUMBER	SYS	ISO/DWG NUMBERS	PROC	INSP REQ	MAT/SCH	DIA/THK	CAL BLOCKS	COMMENTS
B09.011.165	2NI55-11		CN-2NI-55	NDE-600	UT	SS	10.000	Component	Depending on the examiners qualifications, Procedure PDI-UT-2 may be used in lieu of NDE-600. If PDI-UT-2 is used, Calibration Block PDI-UT-2-C may be used.
	Circumferential	NI	CN-ISIN3-2562-1.1			140	1.000		
Class A					Valve 2NI081 to Pipe				
B09.011.165A	2NI55-11		CN-2NI-55	NDE-35	PT	SS	10.000		
	Circumferential	NI	CN-ISIN3-2562-1.1			140	1.000		
Class A					Valve 2NI081 to Pipe				
B09.011.166	2NI55-12		CN-2NI-55	NDE-600	UT	SS	10.000	Component	Depending on the examiners qualifications, Procedure PDI-UT-2 may be used in lieu of NDE-600. If PDI-UT-2 is used, Calibration Block PDI-UT-2-C may be used.
	Circumferential	NI	CN-ISIN3-2562-1.1			140	1.000		
Class A					Pipe to Elbow				
B09.011.166A	2NI55-12		CN-2NI-55	NDE-35	PT	SS	10.000		
	Circumferential	NI	CN-ISIN3-2562-1.1			140	1.000		
Class A					Pipe to Elbow				
B09.011.167	2NI55-14		CN-2NI-55	NDE-600	UT	SS	10.000	Component	Depending on the examiners qualifications, Procedure PDI-UT-2 may be used in lieu of NDE-600. If PDI-UT-2 is used, Calibration Block PDI-UT-2-C may be used.
	Circumferential	NI	CN-ISIN3-2562-1.1			140	1.000		
Class A					Pipe to Elbow				
B09.011.167A	2NI55-14		CN-2NI-55	NDE-35	PT	SS	10.000		
	Circumferential	NI	CN-ISIN3-2562-1.1			140	1.000		
Class A					Pipe to Elbow				
B09.011.168	2NI55-2		CN-2NI-55	NDE-600	UT	SS	6.000	Component	Depending on the examiners qualifications, Procedure PDI-UT-2 may be used in lieu of NDE-600. If PDI-UT-2 is used, Calibration Block PDI-UT-2-C may be used.
	Circumferential	NI	CN-ISIN3-2562-1.1			160	0.719		
Class A					Pipe to Elbow				
B09.011.168A	2NI55-2		CN-2NI-55	NDE-35	PT	SS	6.000		
	Circumferential	NI	CN-ISIN3-2562-1.1			160	0.719		
Class A					Pipe to Elbow				
B09.011.169	2NI55-4		CN-2NI-55	NDE-600	UT	SS	6.000	Component	Depending on the examiners qualifications, Procedure PDI-UT-2 may be used in lieu of NDE-600. If PDI-UT-2 is used, Calibration Block PDI-UT-2-C may be used.
	Circumferential	NI	CN-ISIN3-2562-1.1			160	0.719		
Class A					Pipe to Elbow				

CATEGORY B-J, Pressure Retaining Welds In Piping

Less Than NPS 4

ITEM NUMBER	ID NUMBER	SYS	ISO/DWG NUMBERS	PROC	INSP REQ	MAT/SCH	DIA/THK	CAL BLOCKS	COMMENTS
B09.011.169A	2NI55-4		CN-2NI-55	NDE-35	PT	SS	6.000		
	Circumferential	NI	CN-ISIN3-2562-1.1			160	0.719		
Class A					Pipe to Elbow				
B09.011.170	2NI55-6		CN-2NI-55	NDE-600	UT	SS	6.000	Component	Depending on the examiners qualifications, Procedure PDI-UT-2 may be used in lieu of NDE-600. If PDI-UT-2 is used, Calibration Block PDI-UT-2-C may be used.
	Circumferential	NI	CN-ISIN3-2562-1.1			160	0.719		
Class A					Pipe to Elbow				
B09.011.170A	2NI55-6		CN-2NI-55	NDE-35	PT	SS	6.000		
	Circumferential	NI	CN-ISIN3-2562-1.1			160	0.719		
Class A					Pipe to Elbow				
B09.011.171	2NI55-8		CN-2NI-55	NDE-600	UT	SS	6.000	Component	Depending on the examiners qualifications, Procedure PDI-UT-2 may be used in lieu of NDE-600. If PDI-UT-2 is used, Calibration Block PDI-UT-2-C may be used. Reference Elective Examination Item Number H01.001.001.
	Circumferential	NI	CN-ISIN3-2562-1.1			160	0.719		
Class A					Pipe to Tee				
B09.011.171A	2NI55-8		CN-2NI-55	NDE-35	PT	SS	6.000		
	Circumferential	NI	CN-ISIN3-2562-1.1			160	0.719		
Class A					Pipe to Tee				

Total B09.011 Items: 22

CATEGORY B-J, Pressure Retaining Welds In Piping

Socket Welds

DUKE ENERGY CORPORATION
INSERVICE INSPECTION PLAN MANAGEMENT
Inservice Inspection Database Management System
Catawba 2
Inservice Inspection Plan for Interval 3 Outage 1

ITEM NUMBER	ID NUMBER	SYS	ISO/DWG NUMBERS	PROC	INSP REQ	MAT/SCH	DIA/THK	CAL BLOCKS	COMMENTS
B09.032.003	2NC9-WN8A		CN-2NC-9	NDE-35	PT	SS	3.000		Reactor Coolant Loop 2A Cold Leg.
	Branch	NC	CN-ISIN3-2553-1.0			160	2.038		
Class A			CNM 2201.01-104/3		Branch to Pipe				

Total B09.032 Items: 1

CATEGORY B-J, Pressure Retaining Welds In Piping

Pressure Vessels

ITEM NUMBER	ID NUMBER	SYS	ISO/DWG NUMBERS	PROC	INSP REQ	MAT/SCH	DIA/THK	CAL BLOCKS	COMMENTS
**** Welded Attachments ****									
B09.040.006	2NC44-27		CN-2NC-44	NDE-35	PT	SS	2.000		
	Socket	NC	CN-ISIN3-2553-1.1			160	0.344		
Class A					Pipe to Valve 2NV038				
B09.040.127	2NV323-10		CN-2NV-323	NDE-35	PT	SS	2.000		
	Socket	NV	CN-ISIN3-2554-1.5			160	0.344		
Class A					Elbow to Pipe				
B09.040.128	2NV323-11		CN-2NV-323	NDE-35	PT	SS	2.000		
	Socket	NV	CN-ISIN3-2554-1.5			160	0.344		
Class A					Pipe to Elbow				
B09.040.129	2NV323-12		CN-2NV-323	NDE-35	PT	SS	2.000		
	Socket	NV	CN-ISIN3-2554-1.5			160	0.344		
Class A					Elbow to Pipe				
B09.040.130	2NV323-16		CN-2NV-323	NDE-35	PT	SS	2.000		
	Socket	NV	CN-ISIN3-2554-1.5			160	0.344		
Class A					Tee to Pipe				
B09.040.131	2NV323-18		CN-2NV-323	NDE-35	PT	SS	2.000		
	Socket	NV	CN-ISIN3-2554-1.5			160	0.344		
Class A					Tee to Pipe				
B09.040.132	2NV323-19		CN-2NV-323	NDE-35	PT	SS	2.000		
	Socket	NV	CN-ISIN3-2554-1.5			160	0.344		
Class A					Pipe to Elbow				
B09.040.133	2NV323-20		CN-2NV-323	NDE-35	PT	SS	2.000		
	Socket	NV	CN-ISIN3-2554-1.5			160	0.344		
Class A					Elbow to Pipe				

CATEGORY B-J, Pressure Retaining Welds In Piping

Pressure Vessels

ITEM NUMBER	ID NUMBER	SYS	ISO/DWG NUMBERS	PROC	INSP REQ	MAT/SCH	DIA/THK	CAL BLOCKS	COMMENTS
B09.040.134	2NV323-22		CN-2NV-323	NDE-35	PT	SS	2.000		
	Socket	NV	CN-ISIN3-2554-1.5			160	0.344		
Class A					Valve 2NV060 to Pipe				
B09.040.135	2NV323-25		CN-2NV-323	NDE-35	PT	SS	2.000		
	Socket	NV	CN-ISIN3-2554-1.5			160	0.344		
Class A					Tee to Pipe				
B09.040.136	2NV323-26		CN-2NV-323	NDE-35	PT	SS	2.000		
	Socket	NV	CN-ISIN3-2554-1.5			160	0.344		
Class A					Tee to Pipe				

Total B09.040 Items: 11

Total B09 Items: 34

CATEGORY B-L-2, Pump Casings

Valves

ITEM NUMBER	ID NUMBER	SYS	ISO/DWG NUMBERS	PROC	INSP REQ	MAT/SCH	DIA/THK	CAL BLOCKS	COMMENTS
****** Valves, Less Than NPS 4; Valve Body Welds ******									
B12.020.001	2RCP-2A		CN-2NC-9	QAL-14	VT-3	SS	77.000		Reactor Coolant Pump 2A Casing Internal Surfaces. Only One Pump Required To Be Examined Per Interval. Inspect Only If Pump Is Disassembled For Maintenance, Repair, Or Volumetric Examination.
Class A		NC	CNM-1201.01-115				4.500		
B12.020.002	2RCP-2B		CN-2NC-11	QAL-14	VT-3	SS	77.000		Reactor Coolant Pump 2B Casing Internal Surfaces. Only One Pump Required To Be Examined Per Interval. Inspect Only If Pump Is Disassembled For Maintenance, Repair, Or Volumetric Examination.
Class A		NC	CNM-1201.01-115				4.500		
B12.020.003	2RCP-2C		CN-2NC-13	QAL-14	VT-3	SS	77.000		Reactor Coolant Pump 2C Casing Internal Surfaces. Only One Pump Required To Be Examined Per Interval. Inspect Only If Pump Is Disassembled For Maintenance, Repair, Or Volumetric Examination.
Class A		NC	CNM-1201.01-115				4.500		
B12.020.004	2RCP-2D		CN-2NC-15	QAL-14	VT-3	SS	77.000		Reactor Coolant Pump 2D Casing Internal Surfaces. Only One Pump Required To Be Examined Per Interval. Inspect Only If Pump Is Disassembled For Maintenance, Repair, Or Volumetric Examination.
Class A		NC	CNM-1201.01-115				4.500		

Total B12.020 Items: 4

CATEGORY B-M-2, Valve Body

Reactor Vessel

ITEM NUMBER	ID NUMBER	SYS	ISO/DWG NUMBERS	PROC	INSP REQ	MAT/SCH	DIA/THK	CAL BLOCKS	COMMENTS
**** Vessel Interior ****									
B12.050.001A	2NC-1		CN-2NC-112	QAL-14	VT-3	SS	6.000		6" Relief Valve. Inspect One Of The Following Valves: 2NC-1, 2NC-2, Or 2NC-3. Inspect Only If Disassembled For Maintenance, Repair, Or Volumetric Examination.
Class A		NC	CNM-1205.09-01			160	0.719		
B12.050.001B	2NC-2		CN-2NC-119	QAL-14	VT-3	SS	6.000		6" Relief Valve. Inspect One Of The Following Valves: 2NC-1, 2NC-2, Or 2NC-3. Inspect Only If Disassembled For Maintenance, Repair, Or Volumetric Examination.
Class A		NC	CNM-1205.09-01			160	0.719		
B12.050.001C	2NC-3		CN-2NC-163	QAL-14	VT-3	SS	6.000		6" Relief Valve. Inspect One Of The Following Valves: 2NC-1, 2NC-2, Or 2NC-3. Inspect Only If Disassembled For Maintenance, Repair, Or Volumetric Examination.
Class A		NC	CNM-1205.09-01			160	0.719		
B12.050.002A	2NC-27		CN-2NC-24	QAL-14	VT-3	SS	6.000		6" Fisher Control Valve. Inspect One Of The Following Valves: 2NC-27, Or 2NC-29. Inspect Only If Disassembled For Maintenance, Repair, Or Volumetric Examination.
Class A		NC	CNM-1205.06-41			160	0.719		
B12.050.002B	2NC-29		CN-2NC-33	QAL-14	VT-3	SS	6.000		6" Fisher Control Valve. Inspect One Of The Following Valves: 2NC-27, Or 2NC-29. Inspect Only If Disassembled For Maintenance, Repair, Or Volumetric Examination.
Class A		NC	CNM-1205.06-41			160	0.719		
B12.050.003A	2ND-36B		CN-2ND-66	QAL-14	VT-3	SS	12.000		12" Borg Warner Gate Valve. Inspect One Of The Following Valves: 2ND-1B, 2ND-2A, 2ND-36B, Or 2ND-37A. Inspect Only If Disassembled For Maintenance, Repair, Or Volumetric Examination.
Class A		ND	CNM-1205.00-262			140	2.043		
B12.050.003B	2ND-37A		CN-2ND-66	QAL-14	VT-3	SS	12.000		12" Borg Warner Gate Valve. Inspect One Of The Following Valves: 2ND-1B, 2ND-2A, 2ND-36B, Or 2ND-37A. Inspect Only If Disassembled For Maintenance, Repair, Or Volumetric Examination.
Class A		ND	CNM-1205.00-262			140	2.043		
B12.050.003C	2ND-1B		CN-2ND-67	QAL-14	VT-3	SS	12.000		12" Borg Warner Gate Valve. Inspect One Of The Following Valves: 2ND-1B, 2ND-2A, 2ND-36B, Or 2ND-37A. Inspect Only If Disassembled For Maintenance, Repair, Or Volumetric Examination.
Class A		ND	CNM-1205.00-262			140	2.043		

CATEGORY B-M-2, Valve Body

Reactor Vessel

ITEM NUMBER	ID NUMBER	SYS	ISO/DWG NUMBERS	PROC	INSP REQ	MAT/SCH	DIA/THK	CAL BLOCKS	COMMENTS
B12.050.003D Class A	2ND-2A	ND	CN-2ND-67 CNM-1205.00-262	QAL-14	VT-3	SS 140	12.000 2.043		12" Borg Warner Gate Valve. Inspect One Of The Following Valves: 2ND-1B, 2ND-2A, 2ND-36B, Or 2ND-37A. Inspect Only If Disassembled For Maintenance, Repair, Or Volumetric Examination.
B12.050.004A Class A	2NI-126	NI	CN-2NI-379 CNM-1205.00-63	QAL-14	VT-3	SS 160	6.000 0.719		6" Westinghouse Check Valve. Inspect One Of The Following Valves: 2NI-126, 2NI-134, 2NI-157, 2NI-160, 2NI-175, 2NI-176, 2NI-180, Or 2NI-181. Inspect Only If Disassembled For Maintenance, Repair, Or Volumetric Examination.
B12.050.004B Class A	2NI-134	NI	CN-2NI-91 CNM-1205.00-63	QAL-14	VT-3	SS 160	6.000 0.719		6" Westinghouse Check Valve. Inspect One Of The Following Valves: 2NI-126, 2NI-134, 2NI-157, 2NI-160, 2NI-175, 2NI-176, 2NI-180, Or 2NI-181. Inspect Only If Disassembled For Maintenance, Repair, Or Volumetric Examination.
B12.050.004C Class A	2NI-157	NI	CN-2NI-398 CNM-1205.00-63	QAL-14	VT-3	SS 160	6.000 0.719		6" Westinghouse Check Valve. Inspect One Of The Following Valves: 2NI-126, 2NI-134, 2NI-157, 2NI-160, 2NI-175, 2NI-176, 2NI-180, Or 2NI-181. Inspect Only If Disassembled For Maintenance, Repair, Or Volumetric Examination.
B12.050.004D Class A	2NI-160	NI	CN-2NI-396 CNM-1205.00-63	QAL-14	VT-3	SS 160	6.000 0.719		6" Westinghouse Check Valve. Inspect One Of The Following Valves: 2NI-126, 2NI-134, 2NI-157, 2NI-160, 2NI-175, 2NI-176, 2NI-180, Or 2NI-181. Inspect Only If Disassembled For Maintenance, Repair, Or Volumetric Examination.
B12.050.004E Class A	2NI-175	NI	CN-2NI-70 CNM-1205.00-63	QAL-14	VT-3	SS 160	6.000 0.719		6" Westinghouse Check Valve. Inspect One Of The Following Valves: 2NI-126, 2NI-134, 2NI-157, 2NI-160, 2NI-175, 2NI-176, 2NI-180, Or 2NI-181. Inspect Only If Disassembled For Maintenance, Repair, Or Volumetric Examination.
B12.050.004F Class A	2NI-176	NI	CN-2NI-77 CNM-1205.00-63	QAL-14	VT-3	SS 160	6.000 0.719		6" Westinghouse Check Valve. Inspect One Of The Following Valves: 2NI-126, 2NI-134, 2NI-157, 2NI-160, 2NI-175, 2NI-176, 2NI-180, Or 2NI-181. Inspect Only If Disassembled For Maintenance, Repair, Or Volumetric Examination.

CATEGORY B-M-2, Valve Body

Reactor Vessel

Catawba 2

Inservice Inspection Plan for Interval 3 Outage 1

ITEM NUMBER	ID NUMBER	SYS	ISO/DWG NUMBERS	PROC	INSP REQ	MAT/SCH	DIA/THK	CAL BLOCKS	COMMENTS
B12.050.004G Class A	2NI-180	NI	CN-2NI-145 CNM-1205.00-63	QAL-14	VT-3	SS 160	6.000 0.719		6" Westinghouse Check Valve. Inspect One Of The Following Valves: 2NI-126, 2NI-134, 2NI-157, 2NI-160, 2NI-175, 2NI-176, 2NI-180, Or 2NI-181. Inspect Only If Disassembled For Maintenance, Repair, Or Volumetric Examination.
B12.050.004H Class A	2NI-181	NI	CN-2NI-75 CNM-1205.00-63	QAL-14	VT-3	SS 160	6.000 0.719		6" Westinghouse Check Valve. Inspect One Of The Following Valves: 2NI-126, 2NI-134, 2NI-157, 2NI-160, 2NI-175, 2NI-176, 2NI-180, Or 2NI-181. Inspect Only If Disassembled For Maintenance, Repair, Or Volumetric Examination.
B12.050.005A Class A	2NI-54A	NI	CN-2NI-59 CNM-1205.00-71	QAL-14	VT-3	SS 140	10.000 1.000		10" Westinghouse Gate Valve. Inspect One Of The Following Valves: 2NI-54A, 2NI-65B, 2NI-76A, Or 2NI-88B. Inspect Only If Disassembled For Maintenance, Repair, Or Volumetric Examination.
B12.050.005B Class A	2NI-65B	NI	CN-2NI-61 CNM-1205.00-71	QAL-14	VT-3	SS 140	10.000 1.000		10" Westinghouse Gate Valve. Inspect One Of The Following Valves: 2NI-54A, 2NI-65B, 2NI-76A, Or 2NI-88B. Inspect Only If Disassembled For Maintenance, Repair, Or Volumetric Examination.
B12.050.005C Class A	2NI-76A	NI	CN-2NI-63 CNM-1205.00-71	QAL-14	VT-3	SS 140	10.000 1.000		10" Westinghouse Gate Valve. Inspect One Of The Following Valves: 2NI-54A, 2NI-65B, 2NI-76A, Or 2NI-88B. Inspect Only If Disassembled For Maintenance, Repair, Or Volumetric Examination.
B12.050.005D Class A	2NI-88B	NI	CN-2NI-57 CNM-1205.00-71	QAL-14	VT-3	SS 140	10.000 1.000		10" Westinghouse Gate Valve. Inspect One Of The Following Valves: 2NI-54A, 2NI-65B, 2NI-76A, Or 2NI-88B. Inspect Only If Disassembled For Maintenance, Repair, Or Volumetric Examination.
B12.050.006A Class A	2NI-59	NI	CN-2NI-184 CNM-1205.00-62	QAL-14	VT-3	SS 140	10.000 1.000		10" Westinghouse Check Valve. Inspect One Of The Following Valves: 2NI-59, 2NI-60, 2NI-70, 2NI-71, 2NI-81, 2NI-82, 2NI-93, Or 2NI-94. Inspect Only If Disassembled For Maintenance, Repair, Or Volumetric Examination.
B12.050.006B Class A	2NI-60	NI	CN-2NI-184 CNM-1205.00-62	QAL-14	VT-3	SS 140	10.000 1.000		10" Westinghouse Check Valve. Inspect One Of The Following Valves: 2NI-59, 2NI-60, 2NI-70, 2NI-71, 2NI-81, 2NI-82, 2NI-93, Or 2NI-94. Inspect Only If Disassembled For Maintenance, Repair, Or Volumetric Examination.

CATEGORY B-M-2, Valve Body

Reactor Vessel

ITEM NUMBER	ID NUMBER	SYS	ISO/DWG NUMBERS	PROC	INSP REQ	MAT/SCH	DIA/THK	CAL BLOCKS	COMMENTS
B12.050.006C Class A	2NI-70	NI	CN-2NI-185 CNM-1205.00-62	QAL-14	VT-3	SS 140	10.000 1.000		10" Westinghouse Check Valve. Inspect One Of The Following Valves: 2NI-59, 2NI-60, 2NI-70, 2NI-71, 2NI-81, 2NI-82, 2NI-93, Or 2NI-94. Inspect Only If Disassembled For Maintenance, Repair, Or Volumetric Examination.
B12.050.006D Class A	2NI-71	NI	CN-2NI-185 CNM-1205.00-62	QAL-14	VT-3	SS 140	10.000 1.000		10" Westinghouse Check Valve. Inspect One Of The Following Valves: 2NI-59, 2NI-60, 2NI-70, 2NI-71, 2NI-81, 2NI-82, 2NI-93, Or 2NI-94. Inspect Only If Disassembled For Maintenance, Repair, Or Volumetric Examination.
B12.050.006E Class A	2NI-81	NI	CN-2NI-55 CNM-1205.00-62	QAL-14	VT-3	SS 140	10.000 1.000		10" Westinghouse Check Valve. Inspect One Of The Following Valves: 2NI-59, 2NI-60, 2NI-70, 2NI-71, 2NI-81, 2NI-82, 2NI-93, Or 2NI-94. Inspect Only If Disassembled For Maintenance, Repair, Or Volumetric Examination.
B12.050.006F Class A	2NI-82	NI	CN-2NI-55 CNM-1205.00-62	QAL-14	VT-3	SS 140	10.000 1.000		10" Westinghouse Check Valve. Inspect One Of The Following Valves: 2NI-59, 2NI-60, 2NI-70, 2NI-71, 2NI-81, 2NI-82, 2NI-93, Or 2NI-94. Inspect Only If Disassembled For Maintenance, Repair, Or Volumetric Examination.
B12.050.006G Class A	2NI-93	NI	CN-2NI-183 CNM-1205.00-62	QAL-14	VT-3	SS 140	10.000 1.000		10" Westinghouse Check Valve. Inspect One Of The Following Valves: 2NI-59, 2NI-60, 2NI-70, 2NI-71, 2NI-81, 2NI-82, 2NI-93, Or 2NI-94. Inspect Only If Disassembled For Maintenance, Repair, Or Volumetric Examination.
B12.050.006H Class A	2NI-94	NI	CN-2NI-183 CNM-1205.00-62	QAL-14	VT-3	SS 140	10.000 1.000		10" Westinghouse Check Valve. Inspect One Of The Following Valves: 2NI-59, 2NI-60, 2NI-70, 2NI-71, 2NI-81, 2NI-82, 2NI-93, Or 2NI-94. Inspect Only If Disassembled For Maintenance, Repair, Or Volumetric Examination.
B12.050.007A Class A	2NI-125	NI	CN-2NI-94 CNM-1205.00-59	QAL-14	VT-3	SS 160	8.000 0.906		8" Westinghouse Check Valve. Inspect One Of The Following Valves: 2NI-125 Or 2N1-129. Inspect Only If Disassembled For Maintenance, Repair, Or Volumetric Examination.

CATEGORY B-M-2, Valve Body

Reactor Vessel

ITEM NUMBER	ID NUMBER	SYS	ISO/DWG NUMBERS	PROC	INSP REQ	MAT/SCH	DIA/THK	CAL BLOCKS	COMMENTS
B12.050.007B	2NI-129		CN-2NI-92	QAL-14	VT-3	SS	8.000		8" Westinghouse Check Valve. Inspect One Of The Following Valves: 2NI-125 Or 2N1-129. Inspect Only If Disassembled For Maintenance, Repair, Or Volumetric Examination.
		NI	CNM-1205.00-59			160	0.906		
Class A									

Total B12.050 Items:	**31**
Total B12 Items:	**35**

CATEGORY B-N-1, Interior Of Reactor Vessel

Reactor Vessel (PWR)

Catawba 2

Inservice Inspection Plan for Interval 3 Outage 1

ITEM NUMBER	ID NUMBER	SYS	ISO/DWG NUMBERS	PROC	INSP REQ	MAT/SCH	DIA/THK	CAL BLOCKS	COMMENTS
****** Interior Attachments Within Beltline Region ******									
B13.010.001	2RPV-INTERIOR		CNM 2201.01-51	QAL-14	VT-3	SS	0.000		Reactor Vessel Interior. Areas To Be Examined Shall Include The Spaces Above And Below The Reactor Core That Are Accessible For Examination By Removal Of Components During Normal Refueling Outages. Inspect Each Inspection Period.
		NC	CNM 2201.01-67				0.000		
Class A			CNM 2201.01-0205						

Total B13.010 Items: 1

Total B13 Items: 1

DUKE ENERGY CORPORATION
INSERVICE INSPECTION PLAN MANAGEMENT
Inservice Inspection Database Management System

CATEGORY C-F-1, Pressure Retaining Welds In Austenitic SS Or High Alloy Piping

Piping Welds > 1/5 in. Nom Wall for Piping >= NPS 2 and <= NPS 4

Catawba 2

Inservice Inspection Plan for Interval 3 Outage 1

ITEM NUMBER	ID NUMBER	SYS	ISO/DWG NUMBERS	PROC	INSP REQ	MAT/SCH	DIA/THK	CAL BLOCKS	COMMENTS
**** Piping Welds > 1/5 in. Nom Wall For Piping >= NPS 2 And <= NPS 4 ****									
C05.011.008 Class B	2CA153-49 Circumferential	CA	CN-2CA-153 CN-ISIN3-2592-1.1	NDE-600	UT Elbow to Elbow	SS 80	6.000 0.432	Component	Depending on the examiners qualifications, Procedure PDI-UT-2 may be used in lieu of NDE-600. If PDI-UT-2 is used, Calibration Block PDI-UT-2-C may be used.
C05.011.008A Class B	2CA153-49 Circumferential	CA	CN-2CA-153 CN-ISIN3-2592-1.1	NDE-35	PT Elbow to Elbow	SS 80	6.000 0.432		
C05.011.009 Class B	2CA153-50 Circumferential	CA	CN-2CA-153 CN-ISIN3-2592-1.1	NDE-600	UT Pipe to Elbow	SS 80	6.000 0.432	Component	Depending on the examiners qualifications, Procedure PDI-UT-2 may be used in lieu of NDE-600. If PDI-UT-2 is used, Calibration Block PDI-UT-2-C may be used.
C05.011.009A Class B	2CA153-50 Circumferential	CA	CN-2CA-153 CN-ISIN3-2592-1.1	NDE-35	PT Pipe to Elbow	SS 80	6.000 0.432		
C05.011.101 Class B	2FW76-1 Circumferential	FW	CN-2FW-76 CN-ISIN3-2571-1.0	NDE-600	UT Elbow to Pipe	SS STD	12.000 0.375	Component	Depending on the examiners qualifications, Procedure PDI-UT-2 may be used in lieu of NDE-600. If PDI-UT-2 is used, Calibration Block PDI-UT-2-C may be used.
C05.011.101A Class B	2FW76-1 Circumferential	FW	CN-2FW-76 CN-ISIN3-2571-1.0	NDE-35	PT Elbow to Pipe	SS STD	12.000 0.375		
C05.011.164 Class B	2ND2-1 Circumferential	ND	CN-2ND-2 CN-ISIN3-2561-1.0	NDE-600	UT Elbow to Pipe	SS STD	12.000 0.375	Component	Depending on the examiners qualifications, Procedure PDI-UT-2 may be used in lieu of NDE-600. If PDI-UT-2 is used, Calibration Block PDI-UT-2-C may be used.
C05.011.164A Class B	2ND2-1 Circumferential	ND	CN-2ND-2 CN-ISIN3-2561-1.0	NDE-35	PT Elbow to Pipe	SS STD	12.000 0.375		

DUKE ENERGY CORPORATION
INSERVICE INSPECTION PLAN MANAGEMENT
Inservice Inspection Database Management System

CATEGORY C-F-1, Pressure Retaining Welds In Austenitic SS Or High Alloy Piping

Piping Welds > 1/5 in. Nom Wall for Piping >= NPS 2 and <= NPS 4

Catawba 2

Inservice Inspection Plan for Interval 3 Outage 1

ITEM NUMBER	ID NUMBER	SYS	ISO/DWG NUMBERS	PROC	INSP REQ	MAT/SCH	DIA/THK	CAL BLOCKS	COMMENTS
C05.011.165 Class B	2ND2-10 Circumferential	ND	CN-2ND-2 CN-ISIN3-2561-1.0	NDE-600	UT Pipe to Elbow	SS STD	12.000 0.375	Component	Depending on the examiners qualifications, Procedure PDI-UT-2 may be used in lieu of NDE-600. If PDI-UT-2 is used, Calibration Block PDI-UT-2-C may be used.
C05.011.165A Class B	2ND2-10 Circumferential	ND	CN-2ND-2 CN-ISIN3-2561-1.0	NDE-35	PT Pipe to Elbow	SS STD	12.000 0.375		
C05.011.166 Class B	2ND2-11 Circumferential	ND	CN-2ND-2 CN-ISIN3-2561-1.0	NDE-600	UT Elbow to Pipe	SS STD	12.000 0.375	Component	Depending on the examiners qualifications, Procedure PDI-UT-2 may be used in lieu of NDE-600. If PDI-UT-2 is used, Calibration Block PDI-UT-2-C may be used.
C05.011.166A Class B	2ND2-11 Circumferential	ND	CN-2ND-2 CN-ISIN3-2561-1.0	NDE-35	PT Elbow to Pipe	SS STD	12.000 0.375		
C05.011.167 Class B	2ND2-2 Circumferential	ND	CN-2ND-2 CN-ISIN3-2561-1.0	NDE-600	UT Pipe to Elbow	SS STD	12.000 0.375	Component	Depending on the examiners qualifications, Procedure PDI-UT-2 may be used in lieu of NDE-600. If PDI-UT-2 is used, Calibration Block PDI-UT-2-C may be used.
C05.011.167A Class B	2ND2-2 Circumferential	ND	CN-2ND-2 CN-ISIN3-2561-1.0	NDE-35	PT Pipe to Elbow	SS STD	12.000 0.375		
C05.011.168 Class B	2ND2-3 Circumferential	ND	CN-2ND-2 CN-ISIN3-2561-1.0	NDE-600	UT Elbow to Pipe	SS STD	12.000 0.375	Component	Depending on the examiners qualifications, Procedure PDI-UT-2 may be used in lieu of NDE-600. If PDI-UT-2 is used, Calibration Block PDI-UT-2-C may be used.
C05.011.168A Class B	2ND2-3 Circumferential	ND	CN-2ND-2 CN-ISIN3-2561-1.0	NDE-35	PT Elbow to Pipe	SS STD	12.000 0.375		
C05.011.169 Class B	2ND2-9 Circumferential	ND	CN-2ND-2 CN-ISIN3-2561-1.0	NDE-600	UT Elbow to Pipe	SS STD	12.000 0.375	Component	Depending on the examiners qualifications, Procedure PDI-UT-2 may be used in lieu of NDE-600. If PDI-UT-2 is used, Calibration Block PDI-UT-2-C may be used.

DUKE ENERGY CORPORATION
INSERVICE INSPECTION PLAN MANAGEMENT
Inservice Inspection Database Management System

CATEGORY C-F-1, Pressure Retaining Welds In Austenitic SS Or High Alloy Piping

Piping Welds > 1/5 in. Nom Wall for Piping >= NPS 2 and <= NPS 4

Catawba 2

Inservice Inspection Plan for Interval 3 Outage 1

ITEM NUMBER	ID NUMBER	SYS	ISO/DWG NUMBERS	PROC	INSP REQ	MAT/SCH	DIA/THK	CAL BLOCKS	COMMENTS
C05.011.169A	2ND2-9		CN-2ND-2	NDE-35	PT	SS	12.000		
	Circumferential	ND	CN-ISIN3-2561-1.0			STD	0.375		
Class B					Elbow to Pipe				

Total C05.011 Items: 18

CATEGORY C-F-1, Pressure Retaining Welds In Austenitic SS Or High Alloy Piping

Socket Welds

ITEM NUMBER	ID NUMBER	SYS	ISO/DWG NUMBERS	PROC	INSP REQ	MAT/SCH	DIA/THK	CAL BLOCKS	COMMENTS
C05.021.201 Class B	2NV104-1 Circumferential	NV	CN-2NV-104 CN-ISIN3-2554-1.6	NDE-600	UT Elbow to Pipe	SS 40	4.000 0.237	Component	Depending on the examiners qualifications, Procedure PDI-UT-2 may be used in lieu of NDE-600. If PDI-UT-2 is used. Calibration Block PDI-UT-2-C may be used.
C05.021.201A Class B	2NV104-1 Circumferential	NV	CN-2NV-104 CN-ISIN3-2554-1.6	NDE-35	PT Elbow to Pipe	SS 40	4.000 0.237		
C05.021.202 Class B	2NV104-2 Circumferential	NV	CN-2NV-104 CN-ISIN3-2554-1.6	NDE-600	UT Pipe to Elbow	SS 40	4.000 0.237	Component	Depending on the examiners qualifications, Procedure PDI-UT-2 may be used in lieu of NDE-600. If PDI-UT-2 is used, Calibration Block PDI-UT-2-C may be used.
C05.021.202A Class B	2NV104-2 Circumferential	NV	CN-2NV-104 CN-ISIN3-2554-1.6	NDE-35	PT Pipe to Elbow	SS 40	4.000 0.237		
C05.021.203 Class B	2NV11-16 Circumferential	NV	CN-2NV-11 CN-ISIN3-2554-1.7	NDE-600	UT Elbow to Elbow	SS 160	3.000 0.438	Component	Depending on the examiners qualifications, Procedure PDI-UT-2 may be used in lieu of NDE-600. If PDI-UT-2 is used, Calibration Block PDI-UT-2-C may be used.
C05.021.203A Class B	2NV11-16 Circumferential	NV	CN-2NV-11 CN-ISIN3-2554-1.7	NDE-35	PT Elbow to Elbow	SS 160	3.000 0.438		
C05.021.204 Class B	2NV11-17 Circumferential	NV	CN-2NV-11 CN-ISIN3-2554-1.7	NDE-600	UT Elbow to Pipe	SS 160	3.000 0.438	Component	Depending on the examiners qualifications, Procedure PDI-UT-2 may be used in lieu of NDE-600. If PDI-UT-2 is used, Calibration Block PDI-UT-2-C may be used.
C05.021.204A Class B	2NV11-17 Circumferential	NV	CN-2NV-11 CN-ISIN3-2554-1.7	NDE-35	PT Elbow to Pipe	SS 160	3.000 0.438		

CATEGORY C-F-1, Pressure Retaining Welds In Austenitic SS Or High Alloy Piping

Socket Welds

ITEM NUMBER	ID NUMBER	SYS	ISO/DWG NUMBERS	PROC	INSP REQ	MAT/SCH	DIA/THK	CAL BLOCKS	COMMENTS
C05.021.205 Class B	2NV11-20 Circumferential	NV	CN-2NV-11 CN-ISIN3-2554-1.7	NDE-600	UT Elbow to Pipe	SS 160	4.000 0.531	Component	Depending on the examiners qualifications, Procedure PDI-UT-2 may be used in lieu of NDE-600. If PDI-UT-2 is used, Calibration Block PDI-UT-2-C may be used.
C05.021.205A Class B	2NV11-20 Circumferential	NV	CN-2NV-11 CN-ISIN3-2554-1.7	NDE-35	PT Elbow to Pipe	SS 160	4.000 0.531		
C05.021.206 Class B	2NV11-21 Circumferential	NV	CN-2NV-11 CN-ISIN3-2554-1.7	NDE-600	UT Pipe to Elbow	SS 160	4.000 0.531	Component	Depending on the examiners qualifications, Procedure PDI-UT-2 may be used in lieu of NDE-600. If PDI-UT-2 is used, Calibration Block PDI-UT-2-C may be used.
C05.021.206A Class B	2NV11-21 Circumferential	NV	CN-2NV-11 CN-ISIN3-2554-1.7	NDE-35	PT Pipe to Elbow	SS 160	4.000 0.531		
C05.021.207 Class B	2NV11-7 Circumferential	NV	CN-2NV-11 CN-ISIN3-2554-1.7	NDE-600	UT Pipe to Tee	SS 160	4.000 0.531	Component	Depending on the examiners qualifications, Procedure PDI-UT-2 may be used in lieu of NDE-600. If PDI-UT-2 is used, Calibration Block PDI-UT-2-C may be used.
C05.021.207A Class B	2NV11-7 Circumferential	NV	CN-2NV-11 CN-ISIN3-2554-1.7	NDE-35	PT Pipe to Tee	SS 160	4.000 0.531		
C05.021.208 Class B	2NV11-8 Circumferential	NV	CN-2NV-11 CN-ISIN3-2554-1.7	NDE-600	UT Tee to Pipe	SS 160	4.000 0.531	Component	Depending on the examiners qualifications, Procedure PDI-UT-2 may be used in lieu of NDE-600. If PDI-UT-2 is used, Calibration Block PDI-UT-2-C may be used.
C05.021.208A Class B	2NV11-8 Circumferential	NV	CN-2NV-11 CN-ISIN3-2554-1.7	NDE-35	PT Tee to Pipe	SS 160	4.000 0.531		
C05.021.209 Class B	2NV12-10 Circumferential	NV	CN-2NV-12 CN-ISIN3-2554-1.7	NDE-600	UT Tee to 4X3 Reducer	SS 160	4.000 0.531	Component	Depending on the examiners qualifications, Procedure PDI-UT-2 may be used in lieu of NDE-600. If PDI-UT-2 is used, Calibration Block PDI-UT-2-C may be used.

DUKE ENERGY CORPORATION
INSERVICE INSPECTION PLAN MANAGEMENT
Inservice Inspection Database Management System

CATEGORY C-F-1, Pressure Retaining Welds In Austenitic SS Or High Alloy Piping

Socket Welds

Catawba 2
Inservice Inspection Plan for Interval 3 Outage 1

ITEM NUMBER	ID NUMBER	SYS	ISO/DWG NUMBERS	PROC	INSP REQ	MAT/SCH	DIA/THK	CAL BLOCKS	COMMENTS
C05.021.209A	2NV12-10		CN-2NV-12	NDE-35	PT	SS	4.000		
	Circumferential	NV	CN-ISIN3-2554-1.7			160	0.531		
Class B					Tee to 4X3 Reducer				
C05.021.210	2NV12-11		CN-2NV-12	NDE-600	UT	SS	3.000	Component	Depending on the examiners qualifications, Procedure PDI-UT-2 may be used in lieu of NDE-600. If PDI-UT-2 is used, Calibration Block PDI-UT-2-C may be used.
	Circumferential	NV	CN-ISIN3-2554-1.7			160	0.438		
Class B					4X3 Reducer to Elbow				
C05.021.210A	2NV12-11		CN-2NV-12	NDE-35	PT	SS	3.000		
	Circumferential	NV	CN-ISIN3-2554-1.7			160	0.438		
Class B					4X3 Reducer to Elbow				

Total C05.021 Items: 20

CATEGORY C-F-1, Pressure Retaining Welds In Austenitic SS Or High Alloy Piping

Pipe Branch Connections of Branch Piping >= NPS 2

ITEM NUMBER	ID NUMBER	SYS	ISO/DWG NUMBERS	PROC	INSP REQ	MAT/SCH	DIA/THK	CAL BLOCKS	COMMENTS
C05.030.108	2NV242-10		CN-2NV-242	NDE-35	PT	SS	2.000		
	Socket	NV	CN-ISIN3-2554-1.5			160	0.344		
Class B					Pipe to Tee				
C05.030.109	2NV242-11		CN-2NV-242	NDE-35	PT	SS	2.000		
	Socket	NV	CN-ISIN3-2554-1.5			160	0.344		
Class B					Tee to Pipe				
C05.030.110	2NV242-3		CN-2NV-242	NDE-35	PT	SS	2.000		
	Socket	NV	CN-ISIN3-2554-1.5			160	0.344		
Class B					Elbow to Pipe				
C05.030.111	2NV242-4		CN-2NV-242	NDE-35	PT	SS	2.000		
	Socket	NV	CN-ISIN3-2554-1.5			160	0.344		
Class B					Pipe to Elbow				

Total C05.030 Items: 4

DUKE ENERGY CORPORATION
INSERVICE INSPECTION PLAN MANAGEMENT
Inservice Inspection Database Management System

CATEGORY C-F-1, Pressure Retaining Welds In Austenitic SS Or High Alloy Piping

Piping Welds >= 3/8 in. Nominal Wall Thickness for Piping > NPS 4

Catawba 2

Inservice Inspection Plan for Interval 3 Outage 1

ITEM NUMBER	ID NUMBER	SYS	ISO/DWG NUMBERS	PROC	INSP REQ	MAT/SCH	DIA/THK	CAL BLOCKS	COMMENTS
C05.041.031	2NI100-9		CN-2NI-100	NDE-35	PT	SS	2.000		
	Branch	NI	CN-ISIN3-2562-1.2			80	0.218		
Class B					Pipe to Half Coupling				

Total C05.041 Items: 1

DUKE ENERGY CORPORATION
INSERVICE INSPECTION PLAN MANAGEMENT
Inservice Inspection Database Management System
Catawba 2
Inservice Inspection Plan for Interval 3 Outage 1

CATEGORY C-F-2, Pressure Retaining Welds In Carbon Or Low Alloy Steel Piping

Piping Welds > 1/5 in. Nom Wall for Piping >= NPS 2 and <= NPS 4

ITEM NUMBER	ID NUMBER	SYS	ISO/DWG NUMBERS	PROC	INSP REQ	MAT/SCH	DIA/THK	CAL BLOCKS	COMMENTS
C05.051.001	2CA59-11		CN-2CA-59	NDE-600	UT	CS	6.000	Component	Depending on the examiners qualifications, Procedure PDI-UT-1 may be used in lieu of NDE-600. If PDI-UT-1 is used, Calibration Block PDI-UT-1-C may be used.
	Circumferential	CA	CN-ISIN3-2592-1.1			80	0.432		
Class B					Elbow to Pipe				
C05.051.001A	2CA59-11		CN-2CA-59	NDE-25	MT	CS	6.000		
	Circumferential	CA	CN-ISIN3-2592-1.1			80	0.432		
Class B					Elbow to Pipe				
C05.051.002	2CA59-8		CN-2CA-59	NDE-600	UT	CS	6.000	Component	Depending on the examiners qualifications, Procedure PDI-UT-1 may be used in lieu of NDE-600. If PDI-UT-1 is used, Calibration Block PDI-UT-1-C may be used.
	Circumferential	CA	CN-ISIN3-2592-1.1			80	0.432		
Class B					Pipe to Elbow				
C05.051.002A	2CA59-8		CN-2CA-59	NDE-25	MT	CS	6.000		
	Circumferential	CA	CN-ISIN3-2592-1.1			80	0.432		
Class B					Pipe to Elbow				
C05.051.155	2SV8-2		CN-2SV-8	NDE-600	UT	CS	9.000	Component	Depending on the examiners qualifications, Procedure PDI-UT-1 may be used in lieu of NDE-600. If PDI-UT-1 is used, Calibration Block PDI-UT-1-C may be used.
	Circumferential	SV	CN-ISIN3-2593-1.0			40	1.500		
Class B					Pipe to Valve 2SV009				
C05.051.155A	2SV8-2		CN-2SV-8	NDE-25	MT	CS	9.000		
	Circumferential	SV	CN-ISIN3-2593-1.0			40	1.500		
Class B					Pipe to Valve 2SV009				

Total C05.051 Items: 6

Total C05 Items: 49

CATEGORY C-G, Pressure Retaining Welds In Pumps And Valves

Pressure Vessels

DUKE ENERGY CORPORATION
INSERVICE INSPECTION PLAN MANAGEMENT
Inservice Inspection Database Management System

Catawba 2

Inservice Inspection Plan for Interval 3 Outage 1

ITEM NUMBER	ID NUMBER	SYS	ISO/DWG NUMBERS	PROC	INSP REQ	MAT/SCH	DIA/THK	CAL BLOCKS	COMMENTS
****** Welded Attachments ******									
C06.020.018	2SV-2		CNM 1205.09-02	NDE-35	PT	SS-CS	9.000		Valve Body Weld - Valve Numbers in Valve Group 2SV-2, 2SV-3, 2SV-4, 2SV-5, 2SV-6.
	Circumferential	SV	CN-ISIN3-2593-1.0				1.500		
Class B					Weld 1AD Valve Inlet Neck to Base				

Total C06.020 Items: 1

Total C06 Items: 1

CATEGORY D-A, Welded Attachments For Vessels, Piping, Pumps, And Valves

Pumps

ITEM NUMBER	ID NUMBER	SYS	ISO/DWG NUMBERS	PROC	INSP REQ	MAT/SCH	DIA/THK	CAL BLOCKS	COMMENTS
****** Welded Attachments ******									
D01.020.011	2-R-KC-0227		CN-2492-KC118	QAL-13	VT-1	NA	14.000		Inspect with F01.032.053.
	Mech Snubber	KC	CN-ISIN3-2573-1.2				0.625		
Class C									
D01.020.012	2-R-KC-0001		CN-2492-KC073	QAL-13	VT-1	NA	16.000		Inspect with F01.032.051.
	Spring Hgr	KC	CN-ISIN3-2573-2.0				0.750		
Class C									
D01.020.013	2-R-KC-0054		CN-2492-KC095	QAL-13	VT-1	NA	16.000		Inspect with F01.032.052.
	Spring Hgr	KC	CN-ISIN3-2573-2.1				0.750		
Class C									

Total D01.020 Items: 3

Total D01 Items: 3

CATEGORY F-A, Supports

DUKE ENERGY CORPORATION
INSERVICE INSPECTION PLAN MANAGEMENT
Inservice Inspection Database Management System

Class 1 Piping Supports

Catawba 2
Inservice Inspection Plan for Interval 3 Outage 1

ITEM NUMBER	ID NUMBER	SYS	ISO/DWG NUMBERS	PROC	INSP REQ	MAT/SCH	DIA/THK	CAL BLOCKS	COMMENTS
****** Category A, One-Directional ******									
F01.010.001	2-R-NC-1022		CN-2491-NC004	QAL-14	VT-3	NA	2.000		
	Rigid Support	NC	CN-ISIN3-2553-1.1				0.000		
Class A									
F01.010.002	2-R-NC-1024		CN-2491-NC004	QAL-14	VT-3	NA	2.000		
	Rigid Support	NC	CN-ISIN3-2553-1.1				0.000		
Class A									
Total F01.010 Items:	**2**								
****** Category B, Multi-Directional ******									
F01.011.051	2-R-NI-1759		CN-2491-NI009	QAL-14	VT-3	NA	10.000		
	Rigid Restraint	NI	CN-ISIN3-2562-1.1				0.000		
Class A									
F01.011.052	2-R-NI-1761		CN-2491-NI009	QAL-14	VT-3	NA	10.000		
	Rigid Restraint	NI	CN-ISIN3-2562-1.1				0.000		
Class A									
Total F01.011 Items:	**2**								
****** Category C, Thermal Movement ******									
F01.012.001	2-R-NC-1028		CN-2491-NC004	QAL-14	VT-3	NA	2.000		
	Spring Hgr	NC	CN-ISIN3-2553-1.1				0.000		
Class A									
F01.012.051	2-R-NI-1086		CN-2491-NI002	QAL-14	VT-3	NA	1.500		
	Spring Hgr	NI	CN-ISIN3-2562-1.1				0.000		
Class A									
F01.012.052	2-R-NI-1762		CN-2491-NI009	QAL-14	VT-3	NA	10.000		
	Spring Hgr	NI	CN-ISIN3-2562-1.1				0.000		
Class A									
Total F01.012 Items:	**3**								

CATEGORY F-A, Supports

Class 2 Piping Supports

Catawba 2
Inservice Inspection Plan for Interval 3 Outage 1

ITEM NUMBER	ID NUMBER	SYS	ISO/DWG NUMBERS	PROC	INSP REQ	MAT/SCH	DIA/THK	CAL BLOCKS	COMMENTS
**** Category A, One-Directional ****									
F01.020.001	2-R-CA-1614		CN-2491-CA.00-001	QAL-14	VT-3	NA	6.000		
	Rigid Support	CA	CN-ISIN3-2592-1.1				0.000		
Class B									
F01.020.002	2-R-CA-1620		CN-2491-CA.00-001	QAL-14	VT-3	NA	6.000		
	Rigid Support	CA	CN-ISIN3-2592-1.1				0.000		
Class B									
F01.020.003	2-R-CA-1622		CN-2491-CA.00-001	QAL-14	VT-3	NA	6.000		
	Rigid Support	CA	CN-ISIN3-2592-1.1				0.000		
Class B									
F01.020.021	2-R-FW-0116		CN-2492-FW019	QAL-14	VT-3	NA	12.000		
	Rigid Support	FW	CN-ISIN3-2571-1.0				0.000		
Class B									
F01.020.031	2-R-ND-0319		CN-2492-ND026	QAL-14	VT-3	NA	8.000		
	Rigid Support	ND	CN-ISIN3-2561-1.1				0.000		
Class B									
F01.020.032	2-R-ND-0321		CN-2492-ND026	QAL-14	VT-3	NA	8.000		
	Rigid Support	ND	CN-ISIN3-2561-1.1				0.000		
Class B									
F01.020.033	2-R-ND-0323		CN-2492-ND026	QAL-14	VT-3	NA	8.000		
	Rigid Support	ND	CN-ISIN3-2561-1.1				0.000		
Class B									
F01.020.061	2-R-NI-1769		CN-2491-NI006	QAL-14	VT-3	NA	6.000		
	Rigid Support	NI	CN-ISIN3-2562-1.1				0.000		
Class B									

CATEGORY F-A, Supports

Class 2 Piping Supports

Catawba 2
Inservice Inspection Plan for Interval 3 Outage 1

ITEM NUMBER	ID NUMBER	SYS	ISO/DWG NUMBERS	PROC	INSP REQ	MAT/SCH	DIA/THK	CAL BLOCKS	COMMENTS
F01.020.062	2-R-NI-1770		CN-2491-NI007	QAL-14	VT-3	NA	6.000		
	Rigid Support	NI	CN-ISIN3-2562-1.3				0.000		
Class B									
F01.020.063	2-R-NI-1623		CN-2491-NI008	QAL-14	VT-3	NA	6.000		
	Rigid Support	NI	CN-ISIN3-2562-1.3				0.000		
Class B									
F01.020.091	2-R-NS-1220		CN-2491-NS001	QAL-14	VT-3	NA	8.000		
	Rigid Support	NS	CN-ISIN3-2563-1.0				0.000		
Class B									
F01.020.092	2-R-NS-1221		CN-2491-NS001	QAL-14	VT-3	NA	8.000		
	Rigid Support	NS	CN-ISIN3-2563-1.0				0.000		
Class B									
F01.020.093	2-R-NS-1250		CN-2491-NS001	QAL-14	VT-3	NA	8.000		
	Rigid Support	NS	CN-ISIN3-2563-1.0				0.000		
Class B									
F01.020.141	2-R-NV-1170		CN-2491-NV036	QAL-14	VT-3	NA	2.000		
	Rigid Support	NV	CN-ISIN3-2554-1.5				0.000		
Class B									
F01.020.142	2-R-NV-1171		CN-2491-NV036	QAL-14	VT-3	NA	2.000		
	Rigid Support	NV	CN-ISIN3-2554-1.5				0.000		
Class B									
F01.020.143	2-R-NV-1172		CN-2491-NV036	QAL-14	VT-3	NA	2.000		
	Rigid Support	NV	CN-ISIN3-2554-1.5				0.000		
Class B									

Total F01.020 Items: 16

****** Category B, Multi-Directional ******

CATEGORY F-A, Supports

DUKE ENERGY CORPORATION
INSERVICE INSPECTION PLAN MANAGEMENT
Inservice Inspection Database Management System

Class 2 Piping Supports

Catawba 2
Inservice Inspection Plan for Interval 3 Outage 1

ITEM NUMBER	ID NUMBER	SYS	ISO/DWG NUMBERS	PROC	INSP REQ	MAT/SCH	DIA/THK	CAL BLOCKS	COMMENTS
F01.021.011	2-R-CF-1654		CN-2491-CF020	QAL-14	VT-3	NA	6.000		
	Rigid Restraint	CF	CN-ISIN3-2591-1.1				0.000		
Class B									
F01.021.061	2-R-NI-1619		CN-2491-NI008	QAL-14	VT-3	NA	6.000		
	Rigid Restraint	NI	CN-ISIN3-2562-1.3				0.000		
Class B									
F01.021.062	2-R-NI-1620		CN-2491-NI008	QAL-14	VT-3	NA	6.000		
	Rigid Restraint	NI	CN-ISIN3-2562-1.3				0.000		
Class B									
F01.021.091	2-R-NS-1208		CN-2491-NS002	QAL-14	VT-3	NA	8.000		
	Rigid Restraint	NS	CN-ISIN3-2563-1.0				0.000		
Class B									
F01.021.092	2-R-NS-1209		CN-2491-NS002	QAL-14	VT-3	NA	8.000		
	Rigid Restraint	NS	CN-ISIN3-2563-1.0				0.000		
Class B									
F01.021.093	2-R-NS-1211		CN-2491-NS002	QAL-14	VT-3	NA	8.000		
	Rigid Restraint	NS	CN-ISIN3-2563-1.0				0.000		
Class B									
F01.021.094	2-R-NS-1203		CN-2491-NS003	QAL-14	VT-3	NA	8.000		
	Rigid Restraint	NS	CN-ISIN3-2563-1.0				0.000		
Class B									
F01.021.095	2-R-NS-1204		CN-2491-NS003	QAL-14	VT-3	NA	8.000		
	Rigid Restraint	NS	CN-ISIN3-2563-1.0				0.000		
Class B									
F01.021.141	2-R-NV-1121		CN-2491-NV031	QAL-14	VT-3	NA	2.000		
	Rigid Restraint	NV	CN-ISIN3-2554-1.5				0.000		
Class B									

CATEGORY F-A, Supports

Class 2 Piping Supports

Catawba 2
Inservice Inspection Plan for Interval 3 Outage 1

ITEM NUMBER	ID NUMBER	SYS	ISO/DWG NUMBERS	PROC	INSP REQ	MAT/SCH	DIA/THK	CAL BLOCKS	COMMENTS
F01.021.142	2-R-NV-1126		CN-2491-NV031	QAL-14	VT-3	NA	2.000		
	Rigid Restraint	NV	CN-ISIN3-2554-1.5				0.000		
Class B									
F01.021.143	2-R-NV-1127		CN-2491-NV031	QAL-14	VT-3	NA	2.000		
	Rigid Restraint	NV	CN-ISIN3-2554-1.5				0.000		
Class B									
F01.021.144	2-R-NV-1131		CN-2491-NV032	QAL-14	VT-3	NA	2.000		
	Rigid Restraint	NV	CN-ISIN3-2554-1.5				0.000		
Class B									
F01.021.145	2-R-NV-1132		CN-2491-NV032	QAL-14	VT-3	NA	2.000		
	Rigid Restraint	NV	CN-ISIN3-2554-1.5				0.000		
Class B									
F01.021.146	2-R-NV-1133		CN-2491-NV032	QAL-14	VT-3	NA	2.000		
	Rigid Restraint	NV	CN-ISIN3-2554-1.5				0.000		
Class B									

Total F01.021 Items: 14

****** Category C, Thermal Movement ******

F01.022.001	2-R-CA-1623		CN-2491-CA.00-001	QAL-14	VT-3	NA	6.000		
	Spring Hgr	CA	CN-ISIN3-2592-1.1				0.000		
Class B									
F01.022.031	2-R-ND-0017		CN-2492-ND006	QAL-14	VT-3	NA	8.000		
	Spring Hgr	ND	CN-ISIN3-2561-1.0				0.000		
Class B									
F01.022.032	2-R-ND-0025		CN-2492-ND006	QAL-14	VT-3	NA	8.000		
	Spring Hgr	ND	CN-ISIN3-2561-1.0				0.000		
Class B									

Total F01.022 Items: 3

CATEGORY F-A, Supports

Class 3 Piping Supports

ITEM NUMBER	ID NUMBER	SYS	ISO/DWG NUMBERS	PROC	INSP REQ	MAT/SCH	DIA/THK	CAL BLOCKS	COMMENTS
**** Category A, One-Directional ****									
F01.030.051	2-R-KC-1668		CN-2491-KC140	QAL-14	VT-3	NA	6.000		
	Rigid Support	KC	CN-ISIN3-2573-1.4				0.000		
Class C									
F01.030.052	2-R-KC-1670		CN-2491-KC140	QAL-14	VT-3	NA	6.000		
	Rigid Support	KC	CN-ISIN3-2573-1.4				0.000		
Class C									
F01.030.053	2-R-KC-1671		CN-2491-KC140	QAL-14	VT-3	NA	6.000		
	Rigid Support	KC	CN-ISIN3-2573-1.4				0.000		
Class C									
F01.030.054	2-R-KC-1672		CN-2491-KC140	QAL-14	VT-3	NA	6.000		
	Rigid Support	KC	CN-ISIN3-2573-1.4				0.000		
Class C									
F01.030.055	2-R-KC-1673		CN-2491-KC140	QAL-14	VT-3	NA	6.000		
	Rigid Support	KC	CN-ISIN3-2573-1.4				0.000		
Class C									
F01.030.056	2-R-KC-1641		CN-2491-KC142	QAL-14	VT-3	NA	8.000		
	Rigid Support	KC	CN-ISIN3-2573-1.7				0.000		
Class C									
F01.030.057	2-R-KC-1632		CN-2491-KC144	QAL-14	VT-3	NA	8.000		
	Rigid Support	KC	CN-ISIN3-2573-1.7				0.000		
Class C									
F01.030.058	2-R-KC-1630		CN-2491-KC145	QAL-14	VT-3	NA	8.000		
	Rigid Support	KC	CN-ISIN3-2573-1.3				0.000		
Class C									

CATEGORY F-A, Supports

Class 3 Piping Supports

ITEM NUMBER	ID NUMBER	SYS	ISO/DWG NUMBERS	PROC	INSP REQ	MAT/SCH	DIA/THK	CAL BLOCKS	COMMENTS
F01.030.101	2-R-KD-0086		CN-2493-KD001	QAL-14	VT-3	NA	8.000		
	Rigid Support	KD	CN-ISIN3-2609-1.0				0.000		
Class C									
Total F01.030 Items:	**9**								
****** Category B, Multi-Directional ******									
F01.031.051	2-R-KC-1665		CN-2491-KC140	QAL-14	VT-3	NA	6.000		
	Rigid Restraint	KC	CN-ISIN3-2573-1.4				0.000		
Class C									
F01.031.052	2-R-KC-1666		CN-2491-KC140	QAL-14	VT-3	NA	6.000		
	Rigid Restraint	KC	CN-ISIN3-2573-1.4				0.000		
Class C									
F01.031.121	2-R-LD-0007		CN-2493-LD032	QAL-14	VT-3	NA	6.000		
	Rigid Restraint	LD	CN-ISIN3-2609-2.0				0.000		
Class C									
F01.031.221	2-R-VN-0058		CN-2493-VN002	QAL-14	VT-3	NA	30.000		
	Rigid Restraint	VN	CN-ISIN3-2609-5.0				0.000		
Class C									
Total F01.031 Items:	**4**								
****** Category C, Thermal Movement ******									
F01.032.051	2-R-KC-0001		CN-2492-KC073	QAL-14	VT-3	NA	16.000		Inspect with D01.020.012.
	Spring Hgr	KC	CN-ISIN3-2573-2.0				0.750		
Class C									
F01.032.052	2-R-KC-0054		CN-2492-KC095	QAL-14	VT-3	NA	16.000		Inspect with D01.020.013.
	Spring Hgr	KC	CN-ISIN3-2573-2.1				0.750		
Class C									

CATEGORY F-A, Supports

Class 3 Piping Supports

Catawba 2
Inservice Inspection Plan for Interval 3 Outage 1

ITEM NUMBER	ID NUMBER	SYS	ISO/DWG NUMBERS	PROC	INSP REQ	MAT/SCH	DIA/THK	CAL BLOCKS	COMMENTS
F01.032.053	2-R-KC-0227		CN-2492-KC118	QAL-14	VT-3	NA	14.000		Inspect with D01.020.011.
	Mech Snubber	KC	CN-ISIN3-2573-1.2				0.625		
Class C									
F01.032.101	2-R-KD-0081		CN-2493-KD002	QAL-14	VT-3	NA	8.000		
	Spring Hgr	KD	CN-ISIN3-2609-1.0				0.000		
Class C									
F01.032.102	2-R-KD-0084		CN-2493-KD002	QAL-14	VT-3	NA	8.000		
	Mech Snubber	KD	CN-ISIN3-2609-1.0				0.000		
Class C									
F01.032.121	2-R-LD-0018		CN-2493-LD001	QAL-14	VT-3	NA	6.000		
	Spring Hgr	LD	CN-ISIN3-2609-2.2				0.000		
Class C									

Total F01.032 Items: 6

CATEGORY F-A, Supports

Supports Other Than Piping Supports

Catawba 2
Inservice Inspection Plan for Interval 3 Outage 1

ITEM NUMBER	ID NUMBER	SYS	ISO/DWG NUMBERS	PROC	INSP REQ	MAT/SCH	DIA/THK	CAL BLOCKS	COMMENTS
****** Class 1, 2, and 3 ******									
F01.040.004	2RCPA-COLUMNS		CN-1070-9	QAL-14	VT-3	NA	0.000		Reactor Coolant Pump 2A
	Rigid Support	NC	CN-ISIN3-2553-1.0				0.000		Support Columns (3 Assemblies).
Class A									
F01.040.005	2RCPA-SUPPORT		CN-1070-8	QAL-14	VT-3	NA	0.000		Reactor Coolant Pump 2A Lateral Support.
	Rigid Support	NC	CN-ISIN3-2553-1.0				0.000		
Class A									
F01.040.202	2KFPA-SUPPORT		CNM 2201.05-15	QAL-14	VT-3	NA	0.000		Fuel Pool Cooling Pump 2A Support (2 Angle Beam
	Rigid Support	KC	CN-ISIN3-2570-1.0				0.000		Brace Supports).
Class C									
F01.040.203	2KFHXA-SUPPORT		CNM 1201.06-54	QAL-14	VT-3	NA	0.000		Fuel Pool Cooling Heat
	Rigid Support	KC	CN-ISIN3-2570-1.0				0.000		Exchanger 2A Support (2 Saddle Supports).
Class C									

Total F01.040 Items:	**4**
Total F01 Items:	**63**

ITEM NUMBER	ID NUMBER	SYS	ISO/DWG NUMBERS	PROC	INSP REQ	MAT/SCH	DIA/THK	CAL BLOCKS	COMMENTS
G02.001.023	2SM51-06		CN-2SM-051	NDE-600	UT	CS	34.000	Component	Depending on the examiners qualifications, Procedure PDI-UT-1 may be used in lieu of NDE-600. If PDI-UT-1 is used, Calibration Block PDI-UT-1-C may be used.
		SM	CN-ISIN3-2593-1.0				2.375		
Class B									
G02.001.023A	2SM51-06		CN-2SM-051	NDE-25	MT	CS	34.000		
		SM	CN-ISIN3-2593-1.0				2.375		
Class B									
G02.001.024	2SM51-05		CN-2SM-051	NDE-600	UT	CS	34.000	Component	Depending on the examiners qualifications, Procedure PDI-UT-1 may be used in lieu of NDE-600. If PDI-UT-1 is used, Calibration Block PDI-UT-1-C may be used.
		SM	CN-ISIN3-2593-1.0				2.375		
Class B									
G02.001.024A	2SM51-05		CN-2SM-051	NDE-25	MT	CS	34.000		
		SM	CN-ISIN3-2593-1.0				2.375		
Class B									
G02.001.025	2SM-7C-A		CN-2SM-051	NDE-600	UT	CS	34.000	Component	Grinnell Piece Mark CW-SM-7C Weld A. Depending on the examiners qualifications, Procedure PDI-UT-1 may be used in lieu of NDE-600. If PDI-UT-1 is used, Calibration Block PDI-UT-1-C may be used.
		SM	CN-ISIN3-2593-1.0				2.375		
Class B									
G02.001.025A	2SM-7C-A		CN-2SM-051	NDE-25	MT	CS	34.000		Grinnell Piece Mark CW-SM-7C Weld A
		SM	CN-ISIN3-2593-1.0				2.375		
Class B									
G02.001.026	2SM51-07		CN-2SM-051	NDE-600	UT	CS	34.000	Component	Depending on the examiners qualifications, Procedure PDI-UT-1 may be used in lieu of NDE-600. If PDI-UT-1 is used, Calibration Block PDI-UT-1-C may be used.
		SM	CN-ISIN3-2593-1.0				2.375		
Class B									
G02.001.026A	2SM51-07		CN-2SM-051	NDE-25	MT	CS	34.000		
		SM	CN-ISIN3-2593-1.0				2.375		
Class B									

ITEM NUMBER	ID NUMBER	SYS	ISO/DWG NUMBERS	PROC	INSP REQ	MAT/SCH	DIA/THK	CAL BLOCKS	COMMENTS
G02.001.027	2SM-6C-A		CN-2SM-051	NDE-600	UT	CS	34.000	Component	Grinnell Piece Mark CW-SM-6C Weld A. Depending on the examiners qualifications, Procedure PDI-UT-1 may be used in lieu of NDE-600. If PDI-UT-1 is used, Calibration Block PDI-UT-1-C may be used.
		SM	CN-ISIN3-2593-1.0				1.750		
Class B									
G02.001.027A	2SM-6C-A		CN-2SM-051	NDE-25	MT	CS	34.000		Grinnell Piece Mark CW-SM-6C Weld A
		SM	CN-ISIN3-2593-1.0				1.750		
Class B									
G02.001.028	2SM54-03		CN-2SM-054	NDE-600	UT	CS	34.000	Component	Depending on the examiners qualifications, Procedure PDI-UT-1 may be used in lieu of NDE-600. If PDI-UT-1 is used, Calibration Block PDI-UT-1-C may be used.
		SM	CN-ISIN3-2593-1.0				1.750		
Class B									
G02.001.028A	2SM54-03		CN-2SM-054	NDE-25	MT	CS	34.000		
		SM	CN-ISIN3-2593-1.0				1.750		
Class B									
G02.001.029	2SM54-02		CN-2SM-054	NDE-600	UT	CS	34.000	Component	Depending on the examiners qualifications, Procedure PDI-UT-1 may be used in lieu of NDE-600. If PDI-UT-1 is used, Calibration Block PDI-UT-1-C may be used.
		SM	CN-ISIN3-2593-1.0				1.750		
Class B									
G02.001.029A	2SM54-02		CN-2SM-054	NDE-25	MT	CS	34.000		
		SM	CN-ISIN3-2593-1.0				1.750		
Class B									
G02.001.030	2SM-4C-A		CN-2SM-054	NDE-600	UT	CS	34.000	Component	Grinnell Piece Mark CW-SM-4C Weld A. Depending on the examiners qualifications, Procedure PDI-UT-1 may be used in lieu of NDE-600. If PDI-UT-1 is used, Calibration Block PDI-UT-1-C may be used.
		SM	CN-ISIN3-2593-1.0				1.375		
Class B									
G02.001.030A	2SM-4C-A		CN-2SM-054	NDE-25	MT	CS	34.000		Grinnell Piece Mark CW-SM-4C Weld A
		SM	CN-ISIN3-2593-1.0				1.375		
Class B									

ITEM NUMBER	ID NUMBER	SYS	ISO/DWG NUMBERS	PROC	INSP REQ	MAT/SCH	DIA/THK	CAL BLOCKS	COMMENTS
G02.001.031	2SM-4C-B		CN-2SM-054	NDE-600	UT	CS	34.000	Component	Grinnell Piece Mark CW-SM-4C Weld B. Depending on the examiners qualifications, Procedure PDI-UT-1 may be used in lieu of NDE-600. If PDI-UT-1 is used, Calibration Block PDI-UT-1-C may be used.
		SM	CN-ISIN3-2593-1.0				1.375		
Class B									
G02.001.031A	2SM-4C-B		CN-2SM-054	NDE-25	MT	CS	34.000		Grinnell Piece Mark CW-SM-4C Weld B
		SM	CN-ISIN3-2593-1.0				1.375		
Class B									
G02.001.032	2SM-4C-C		CN-2SM-054	NDE-600	UT	CS	34.000	Component	Grinnell Piece Mark CW-SM-4C Weld C. Depending on the examiners qualifications, Procedure PDI-UT-1 may be used in lieu of NDE-600. If PDI-UT-1 is used, Calibration Block PDI-UT-1-C may be used.
		SM	CN-ISIN3-2593-1.0				1.375		
Class B									
G02.001.032A	2SM-4C-C		CN-2SM-054	NDE-25	MT	CS	34.000		Grinnell Piece Mark CW-SM-4C Weld C
		SM	CN-ISIN3-2593-1.0				1.375		
Class B									
G02.001.033	2SM54-01		CN-2SM-054	NDE-600	UT	CS	34.000	Component	Depending on the examiners qualifications, Procedure PDI-UT-1 may be used in lieu of NDE-600. If PDI-UT-1 is used, Calibration Block PDI-UT-1-C may be used.
		SM	CN-ISIN3-2593-1.0				1.375		
Class B									
G02.001.033A	2SM54-01		CN-2SM-054	NDE-25	MT	CS	34.000		
		SM	CN-ISIN3-2593-1.0				1.375		
Class B									

Total G02.001 Items: 22

Total G02 Items: 22

ITEM NUMBER	ID NUMBER	SYS	ISO/DWG NUMBERS	PROC	INSP REQ	MAT/SCH	DIA/THK	CAL BLOCKS	COMMENTS
G06.001.001 Class A	2PZR-W4ASE Circumferential Term end Dissimilar	NC	CNM 2201.01-110/1 CNM 2201.01-110/2	QAL-15	VT-2	SS-CS	6.000 0.960		Pressurizer Safety Nozzle Safe End X-Y Quadrant. Bare Metal Visual Examination by VT-2 qualified inspector around 100% of penetration. (For responsibile individual, contact J. M. Shuping, Alloy 600 Engineer Nuclear Technical Services). Reference NRC Bulletin 2004-01). Reference Item Number G08.001.003.
G06.001.002 Class A	2PZR-W4BSE Circumferential Term end Dissimilar	NC	CNM 2201.01-110/1 CNM 2201.01-110/2	QAL-15	VT-2 Nozzle to Safe End	SS-CS	6.000 0.960		Pressurizer Safety Nozzle To Safe End. W-X Quadrant. Bare Metal Visual Examination by VT-2 qualified inspector around 100% of penetration. (For responsibile individual, contact J. M. Shuping, Alloy 600 Engineer Nuclear Technical Services). Reference NRC Bulletin 2004-01). Reference Item Number G08.001.004.
G06.001.003 Class A	2PZR-W4CSE Circumferential Term end Dissimilar	NC	CNM 2201.01-110/1 CNM 2201.01-110/2	QAL-15	VT-2 Nozzle to Safe End	SS-CS	6.000 0.960		Pressurizer Relief Nozzle To Safe End. W-Z Quadrant. Bare Metal Visual Examination by VT-2 qualified inspector around 100% of penetration. (For responsibile individual, contact J. M. Shuping, Alloy 600 Engineer Nuclear Technical Services). Reference NRC Bulletin 2004-01) . Reference Item Number G08.001.005.
G06.001.004 Class A	2PZR-W3SE Circumferential Term end Dissimilar	NC	CNM 2201.01-110/1 CNM 2201.01-110/2	QAL-15	VT-2 Nozzle to Safe End	SS-CS	6.000 0.960		Pressurizer Safety Nozzle To Safe End. Y-Z Quadrant. Bare Metal Visual Examination by VT-2 qualified inspector around 100% of penetration. (For responsibile individual, contact J. M. Shuping, Alloy 600 Engineer Nuclear Technical Services). Reference NRC Bulletin 2004-01) . Reference Item Number G08.001.002.
G06.001.005 Class A	2PZR-W1SE Circumferential Term end Dissimilar	NC	CNM 2201.01-110/1 CNM 2201.01-110/2	QAL-15	VT-2 Nozzle to Safe End	SS-CS	14.000 1.640		Pressurizer Surge Nozzle To Safe End. Bare Metal Visual Examination by VT-2 qualified inspector around 100% of penetration. (For responsibile individual, contact J. M. Shuping, Alloy 600 Engineer Nuclear Technical Services). Reference NRC Bulletin 2004-01) .

ITEM NUMBER	ID NUMBER	SYS	ISO/DWG NUMBERS	PROC	INSP REQ	MAT/SCH	DIA/THK	CAL BLOCKS	COMMENTS
									Reference Item Number G08.001.001.
G06.001.006 Class A	2PZR-W2SE Circumferential Term end Dissimilar	NC	CNM 2201.01-110/1 CNM 2201.01-110/2	QAL-15	VT-2 Nozzle to Safe End	SS-CS	4.000 0.760		Pressurizer Spray Nozzle To Safe End. Bare Metal Visual Examination by VT-2 qualified inspector around 100% of penetration. (For responsibile individual, contact J. M. Shuping, Alloy 600 Engineer Nuclear Technical Services). Reference NRC Bulletin 2004-01). Reference Item Number G08.001.006.
Total G06.001 Items:	**6**								
G06.002.001 Class A	2PZR-MANWAY	NC	CNM 2201.01-110/1 CNM 2201.01-110/2	QAL-15	VT-2	NA	0.000 0.000		Pressurizer Manway Diaphram Seal Weld. Bare Metal Visual Examination by VT-2 qualified inspector. Examine the gap between the Pressurizer Manway Cover and Manway for evidence of diaphram plate seal weld leakage. (For responsibile individual, contact J. M. Shuping, Alloy 600 Engineer Nuclear Technical Services). Reference NRC Bulletin 2004-01)
Total G06.002 Items:	**1**								
Total G06 Items:	**7**								

Duke Power Company

Quality Assurance Technical Services

Inservice Inspection Plan For:

Catawba Unit 2

Interval 3

ISI Outage 2

Refueling Outage EOC 15

ISI Inspection Listing

Revision 0

CATEGORY B-A, Pressure Retaining Welds In Reactor Vessel

Head-to-Flange Weld

DUKE ENERGY CORPORATION
INSERVICE INSPECTION PLAN MANAGEMENT
Inservice Inspection Database Management System

Catawba 2

Inservice Inspection Plan for Interval 3 Outage 2

ITEM NUMBER	ID NUMBER	SYS	ISO/DWG NUMBERS	PROC	INSP REQ	MAT/SCH	DIA/THK	CAL BLOCKS	COMMENTS
B01.030.002	2RPV-101-121		CNM 2201.01-0051	NDE-650	UT	CS	0.000	CB-08-99	Upper Shell (Nozzle Belt) To Flange. UT From Flange Surface.
	Circumferential	NC	CNM 2201.01-67				10.750		
Class A			CNM 2201.01-0205		Shell to Flange				

Total B01.030 Items: 1

Total B01 Items: 1

CATEGORY B-B, Pressure Retaining Welds In Vessels Other Than Reactor Vessels

Pressurizer

DUKE ENERGY CORPORATION
INSERVICE INSPECTION PLAN MANAGEMENT
Inservice Inspection Database Management System

Catawba 2

Inservice Inspection Plan for Interval 3 Outage 2

ITEM NUMBER	ID NUMBER	SYS	ISO/DWG NUMBERS	PROC	INSP REQ	MAT/SCH	DIA/THK	CAL BLOCKS	COMMENTS
****** Shell-to-Head; Longitudinal ******									
B02.011.002	2PZR-W8E		CNM 2201.01-110/1	NDE-620	UT	CS	91.500	50337	Pressurizer Upper Head To Shell Circumferential Weld.
	Circumferential	NC	CNM 2201.01-110/2	PDI-UT-6			3.750	50236A	
Class A					Head to Shell				

Total B02.011 Items: 1

Total B02 Items: 1

CATEGORY B-D, Full Penetration Welded Nozzels In Vessels - Inspection Program B

Pressurizer

DUKE ENERGY CORPORATION
INSERVICE INSPECTION PLAN MANAGEMENT
Inservice Inspection Database Management System
Catawba 2
Inservice Inspection Plan for Interval 3 Outage 2

ITEM NUMBER	ID NUMBER	SYS	ISO/DWG NUMBERS	PROC	INSP REQ	MAT/SCH	DIA/THK	CAL BLOCKS	COMMENTS
****** Nozzle Inside Radius Section ******									
B03.110.002	2PZR-W2		CNM 2201.01-110/1	NDE-640	UT	CS	12.750	50338	Pressurizer Spray Nozzle To Upper Head.
	Circumferential	NC	CNM 2201.01-110/2	NDE-820			3.000		
Class A					Nozzle to Head				
B03.110.006	2PZR-W4C		CNM 2201.01-110/1	NDE-640	UT	CS	15.000	50338	Pressurizer Relief Nozzle To Upper Head. W-Z Quadrant.
	Circumferential	NC	CNM 2201.01-110/2	NDE-820			3.000		
Class A					Nozzle to Head				

Total B03.110 Items: 2

CATEGORY B-D, Full Penetration Welded Nozzels In Vessels - Inspection Program B

Steam Generators (Primary Side)

ITEM NUMBER	ID NUMBER	SYS	ISO/DWG NUMBERS	PROC	INSP REQ	MAT/SCH	DIA/THK	CAL BLOCKS	COMMENTS
****** Nozzle-to-Vessel Welds ******									
B03.120.002	2PZR-W2		CNM 2201.01-110/1	NDE-680	UT	CS	12.750	50237D	Pressurizer Spray Nozzle To Upper Head. (Inside Radius Section)
		NC	CNM 2201.01-110/2				3.750		
Class A					Nozzle to Head				
B03.120.006	2PZR-W4C		CNM 2201.01-110/1	NDE-680	UT	CS	15.000	50237D	Pressurizer Relief Nozzle To Upper Head. (Inside Radius Section) W-Z Quadrant.
		NC	CNM 2201.01-110/2				3.750		
Class A					Nozzle to Head				

Total B03.120 Items: 2

CATEGORY B-D, Full Penetration Welded Nozzels In Vessels - Inspection Program B

Heat Exchangers (Primary Side)

ITEM NUMBER	ID NUMBER	SYS	ISO/DWG NUMBERS	PROC	INSP REQ	MAT/SCH	DIA/THK	CAL BLOCKS	COMMENTS
****** Nozzle-to-Vessel Welds ******									
B03.140.003	2SGB-INLET		CNM 2201.01-102/2	NDE-680	UT	CS	39.000	50235	Steam Generator 2B Primary Inlet Nozzle To Lower Head. (Inside Radius Section) X-Y Quadrant.
		NC	CNM 2201.01-106/1				5.160		
Class A									
B03.140.004	2SGB-OUTLET		CNM 2201.01-102/2	NDE-680	UT	CS	39.000	50235	Steam Generator 2B Primary Outlet Nozzle To Lower Head. (Inside Radius Section) Y-Z Quadrant.
		NC	CNM 2201.01-106/1				5.160		
Class A									

Total B03.140 Items: 2

Total B03 Items: 6

CATEGORY B-F, Pressure Retaining Dissimilar Metal Welds In Vessel Nozzles

Reactor Vessel

DUKE ENERGY CORPORATION
INSERVICE INSPECTION PLAN MANAGEMENT
Inservice Inspection Database Management System
Catawba 2
Inservice Inspection Plan for Interval 3 Outage 2

****** Less Than NPS 4; Nozzle-to-Safe End Butt Welds ******

ITEM NUMBER	ID NUMBER	SYS	ISO/DWG NUMBERS	PROC	INSP REQ	MAT/SCH	DIA/THK	CAL BLOCKS	COMMENTS
B05.010.009	2RPV-W80-101SE		CNM 2201.01-86	TBD	UT	CS-Inconel	6.625	TBD	RV Closure Head Pc. 104-101 To UHI Tube Pc. 108-202 At 0 Degrees. Reference Item Number G07.004.002.
	Circumferential	NC	E 8871-101-001				0.625		
Class A			E 8871-101-005		Nozzle to Safe End				
	Dissimilar								
B05.010.009A	2RPV-W80-101SE		CNM 2201.01-86	NDE-35	PT	CS-Inconel	6.625		RV Closure Head Pc. 104-101 To UHI Tube Pc. 108-202 At 0 Degrees.
	Circumferential	NC	E 8871-101-001				0.625		
Class A			E 8871-101-005		Nozzle to Safe End				
	Dissimilar								
B05.010.010	2RPV-W81-101SE		CNM 2201.01-86	TBD	UT	CS-Inconel	6.625	TBD	RV Closure Head Pc. 104-101 To UHI Tube Pc. 108-202 At 90 Degrees. Reference Item Number G07.004.003.
	Circumferential	NC	E 8871-101-001				0.625		
Class A			E 8871-101-005		Nozzle to Safe End				
	Dissimilar								
B05.010.010A	2RPV-W81-101SE		CNM 2201.01-86	NDE-35	PT	CS-Inconel	6.625		RV Closure Head Pc. 104-101 To UHI Tube Pc. 108-202 At 90 Degrees.
	Circumferential	NC	E 8871-101-001				0.625		
Class A			E 8871-101-005		Nozzle to Safe End				
	Dissimilar								
B05.010.011	2RPV-W82-101SE		CNM 2201.01-86	TBD	UT	CS-Inconel	6.625	TBD	RV Closure Head Pc. 104-101 To UHI Tube Pc. 108-202 At 180 Degrees. Reference Item Number G07.004.004.
	Circumferential	NC	E 8871-101-001				0.625		
Class A			E 8871-101-005		Nozzle to Safe End				
	Dissimilar								
B05.010.011A	2RPV-W82-101SE		CNM 2201.01-86	NDE-35	PT	CS-Inconel	6.625		RV Closure Head Pc. 104-101 To UHI Tube Pc. 108-202 At 180 Degrees.
	Circumferential	NC	E 8871-101-001				0.625		
Class A			E 8871-101-005		Nozzle to Safe End				
	Dissimilar								
B05.010.012	2RPV-W79-101SE		CNM 2201.01-86	TBD	UT	CS-Inconel	6.625	TBD	RV Closure Head Pc. 104-101 To UHI Tube Pc. 108-202 At 270 Degrees. Reference Item Number G07.004.001.
	Circumferential	NC	E 8871-101-001				0.625		
Class A			E 8871-101-005		Nozzle to Safe End				
	Dissimilar								
B05.010.012A	2RPV-W79-101SE		CNM 2201.01-86	NDE-35	PT	CS-Inconel	6.625		RV Closure Head Pc. 104-101 To UHI Tube Pc. 108-202 At 270 Degrees.
	Circumferential	NC	E 8871-101-001				0.625		
Class A			E 8871-101-005		Nozzle to Safe End				
	Dissimilar								

Total B05.010 Items: 8

CATEGORY B-F, Pressure Retaining Dissimilar Metal Welds In Vessel Nozzles

Pressurizer

ITEM NUMBER	ID NUMBER	SYS	ISO/DWG NUMBERS	PROC	INSP REQ	MAT/SCH	DIA/THK	CAL BLOCKS	COMMENTS
****** Less Than NPS 4; Nozzle-to-Safe End Butt Welds ******									
B05.040.002	2PZR-W2SE		CNM 2201.01-110/1	TBD	UT	SS-CS	4.000	TBD	Pressurizer Spray Nozzle To Safe End.
	Circumferential	NC	CNM 2201.01-110/2				0.760		Reference Item Number G07.001.006
Class A	Term end				Nozzle to				
	Dissimilar				Safe End				
B05.040.002A	2PZR-W2SE		CNM 2201.01-110/1	NDE-35	PT	SS-CS	4.000		Pressurizer Spray Nozzle To Safe End.
	Circumferential	NC	CNM 2201.01-110/2				0.760		
Class A	Term end				Nozzle to				
	Dissimilar				Safe End				
B05.040.006	2PZR-W4CSE		CNM 2201.01-110/1	TBD	UT	SS-CS	6.000	TBD	Pressurizer Relief Nozzle To Safe End.
	Circumferential	NC	CNM 2201.01-110/2				0.960		W-Z Quadrant.
Class A	Term end				Nozzle to				Reference Item Number G07.001.005.
	Dissimilar				Safe End				
B05.040.006A	2PZR-W4CSE		CNM 2201.01-110/1	NDE-35	PT	SS-CS	6.000		Pressurizer Relief Nozzle To Safe End.
	Circumferential	NC	CNM 2201.01-110/2				0.960		W-Z Quadrant.
Class A	Term end				Nozzle to				
	Dissimilar				Safe End				

Total B05.040 Items: 4

CATEGORY B-F, Pressure Retaining Dissimilar Metal Welds In Vessel Nozzles

Steam Generator

DUKE ENERGY CORPORATION
INSERVICE INSPECTION PLAN MANAGEMENT
Inservice Inspection Database Management System
Catawba 2
Inservice Inspection Plan for Interval 3 Outage 2

ITEM NUMBER	ID NUMBER	SYS	ISO/DWG NUMBERS	PROC	INSP REQ	MAT/SCH	DIA/THK	CAL BLOCKS	COMMENTS
****** Less Than NPS 4; Nozzle-to-Safe End Butt Welds ******									
B05.070.005	2SGC-INLET-SE		CNM 2201.01-105/1	NDE-12	RT	SS-CS	31.000		Steam Generator 2C Inlet Nozzle To Safe End. To Be Done With B09.011.010. Schedule for re-examination in EOC15, EOC17 and EOC20 in accordance with ASME Section XI, Paragraph IWB-2420(b).
	Circumferential	NC	CN-2NC-013				2.500		
Class A			CNM 2201.01-0217		Nozzle to Safe End				
	Dissimilar								

Total B05.070 Items:	**1**
Total B05 Items:	**13**

CATEGORY B-G-1, Pressure Retaining Bolting, Greater Than 2 in. In Diameter

Reactor Vessel

DUKE ENERGY CORPORATION
INSERVICE INSPECTION PLAN MANAGEMENT
Inservice Inspection Database Management System
Catawba 2
Inservice Inspection Plan for Interval 3 Outage 2

ITEM NUMBER	ID NUMBER	SYS	ISO/DWG NUMBERS	PROC	INSP REQ	MAT/SCH	DIA/THK	CAL BLOCKS	COMMENTS
**** Closure Washers, Bushings ****									
B06.040.001	2RPV-THREAD-01	NC	E 8871-126-002 CNM 2201.01-52	NDE-640	UT	CS	7.000 12.000	40387	Threads in Reactor Vessel Flange.
Class A									
B06.040.002	2RPV-THREAD-02	NC	E 8871-126-002 CNM 2201.01-52	NDE-640	UT	CS	7.000 12.000	40387	Threads in Reactor Vessel Flange.
Class A									
B06.040.003	2RPV-THREAD-03	NC	E 8871-126-002 CNM 2201.01-52	NDE-640	UT	CS	7.000 12.000	40387	Threads in Reactor Vessel Flange.
Class A									
B06.040.004	2RPV-THREAD-04	NC	E 8871-126-002 CNM 2201.01-52	NDE-640	UT	CS	7.000 12.000	40387	Threads in Reactor Vessel Flange.
Class A									
B06.040.005	2RPV-THREAD-05	NC	E 8871-126-002 CNM 2201.01-52	NDE-640	UT	CS	7.000 12.000	40387	Threads in Reactor Vessel Flange.
Class A									
B06.040.006	2RPV-THREAD-06	NC	E 8871-126-002 CNM 2201.01-52	NDE-640	UT	CS	7.000 12.000	40387	Threads in Reactor Vessel Flange.
Class A									
B06.040.007	2RPV-THREAD-07	NC	E 8871-126-002 CNM 2201.01-52	NDE-640	UT	CS	7.000 12.000	40387	Threads in Reactor Vessel Flange.
Class A									
B06.040.008	2RPV-THREAD-08	NC	E 8871-126-002 CNM 2201.01-52	NDE-640	UT	CS	7.000 12.000	40387	Threads in Reactor Vessel Flange.
Class A									

CATEGORY B-G-1, Pressure Retaining Bolting, Greater Than 2 in. In Diameter

Reactor Vessel

ITEM NUMBER	ID NUMBER	SYS	ISO/DWG NUMBERS	PROC	INSP REQ	MAT/SCH	DIA/THK	CAL BLOCKS	COMMENTS
B06.040.009	2RPV-THREAD-09		E 8871-126-002	NDE-640	UT	CS	7.000	40387	Threads in Reactor Vessel Flange.
		NC	CNM 2201.01-52				12.000		
Class A									
B06.040.010	2RPV-THREAD-10		E 8871-126-002	NDE-640	UT	CS	7.000	40387	Threads in Reactor Vessel Flange.
		NC	CNM 2201.01-52				12.000		
Class A									
B06.040.011	2RPV-THREAD-11		E 8871-126-002	NDE-640	UT	CS	7.000	40387	Threads in Reactor Vessel Flange.
		NC	CNM 2201.01-52				12.000		
Class A									
B06.040.012	2RPV-THREAD-12		E 8871-126-002	NDE-640	UT	CS	7.000	40387	Threads in Reactor Vessel Flange.
		NC	CNM 2201.01-52				12.000		
Class A									
B06.040.013	2RPV-THREAD-13		E 8871-126-002	NDE-640	UT	CS	7.000	40387	Threads in Reactor Vessel Flange.
		NC	CNM 2201.01-52				12.000		
Class A									
B06.040.014	2RPV-THREAD-14		E 8871-126-002	NDE-640	UT	CS	7.000	40387	Threads in Reactor Vessel Flange.
		NC	CNM 2201.01-52				12.000		
Class A									
B06.040.015	2RPV-THREAD-15		E 8871-126-002	NDE-640	UT	CS	7.000	40387	Threads in Reactor Vessel Flange.
		NC	CNM 2201.01-52				12.000		
Class A									
B06.040.016	2RPV-THREAD-16		E 8871-126-002	NDE-640	UT	CS	7.000	40387	Threads in Reactor Vessel Flange.
		NC	CNM 2201.01-52				12.000		
Class A									
B06.040.017	2RPV-THREAD-17		E 8871-126-002	NDE-640	UT	CS	7.000	40387	Threads in Reactor Vessel Flange.
		NC	CNM 2201.01-52				12.000		
Class A									

CATEGORY B-G-1, Pressure Retaining Bolting, Greater Than 2 in. In Diameter

Reactor Vessel

ITEM NUMBER	ID NUMBER	SYS	ISO/DWG NUMBERS	PROC	INSP REQ	MAT/SCH	DIA/THK	CAL BLOCKS	COMMENTS
B06.040.018	2RPV-THREAD-18		E 8871-126-002	NDE-640	UT	CS	7.000	40387	Threads in Reactor Vessel Flange.
		NC	CNM 2201.01-52				12.000		
Class A									

Total B06.040 Items: 18

CATEGORY B-G-1, Pressure Retaining Bolting, Greater Than 2 in. In Diameter

Pumps

ITEM NUMBER	ID NUMBER	SYS	ISO/DWG NUMBERS	PROC	INSP REQ	MAT/SCH	DIA/THK	CAL BLOCKS	COMMENTS
****** Flange Surface, when connection disassembled ******									
B06.180.001	2RCP-2A-F		CN-2NC-009	PDI-UT-5	UT	CS	4.320	50502	Reactor Coolant Pump 2A Main Flange Bolting (24 Bolts).
		NC	CNM 2201.01-115				24.000		
Class A									

Total B06.180 Items: 1

CATEGORY B-G-1, Pressure Retaining Bolting, Greater Than 2 in. In Diameter

Pumps

ITEM NUMBER	ID NUMBER	SYS	ISO/DWG NUMBERS	PROC	INSP REQ	MAT/SCH	DIA/THK	CAL BLOCKS	COMMENTS
**** Nuts, Bushings, and Washers ****									
B06.190.001	2RCP-2A-FLANGE		CN-2NC-009	QAL-13	VT-1	SS	0.000		Reactor Colant Pump 2A Main Flange Surface.
		NC	CNM 2201.01-115				0.000		Examine When Connection Is Disassembled.
Class A									
B06.190.002	2RCP-2B-FLANGE		CN-2NC-011	QAL-13	VT-1	SS	0.000		Reactor Colant Pump 2B Main Flange Surface.
		NC	CNM 2201.01-115				0.000		Examine When Connection Is Disassembled.
Class A									
B06.190.003	2RCP-2C-FLANGE		CN-2NC-013	QAL-13	VT-1	SS	0.000		Reactor Colant Pump 2C Main Flange Surface.
		NC	CNM 2201.01-115				0.000		Examine When Connection Is Disassembled.
Class A									
B06.190.004	2RCP-2D-FLANGE		CN-2NC-015	QAL-13	VT-1	SS	0.000		Reactor Colant Pump 2D Main Flange Surface.
		NC	CNM 2201.01-115				0.000		Examine When Connection Is Disassembled.
Class A									

Total B06.190 Items: 4

Total B06 Items: 23

CATEGORY B-G-2, Pressure Retaining Bolting, 2 in. And Less In Diameter

Heat Exchangers

ITEM NUMBER	ID NUMBER	SYS	ISO/DWG NUMBERS	PROC	INSP REQ	MAT/SCH	DIA/THK	CAL BLOCKS	COMMENTS
****** Bolts, Studs, and Nuts ******									
B07.030.001	2SGA-MW-X-Y	NC	CNM 2201.01-59/1 CNM 2201.01-113/1	QAL-13	VT-1	CS	1.880 0.000		Steam Generator 2A Manway Bolting (16 Studs and Nuts). Primary Manway in X-Y Quadrant (Inlet Side). Examine All Bolting Material.
Class A									
B07.030.002	2SGA-MW-Y-Z	NC	CNM 2201.01-59/1 CNM 2201.01-113/1	QAL-13	VT-1	CS	1.880 0.000		Steam Generator 2A Manway Bolting (16 Studs and Nuts). Primary Manway in Y-Z Quadrant (Outlet Side). Examine All Bolting Material.
Class A									

Total B07.030 Items: 2

DUKE ENERGY CORPORATION
INSERVICE INSPECTION PLAN MANAGEMENT
Inservice Inspection Database Management System
Catawba 2
Inservice Inspection Plan for Interval 3 Outage 2

CATEGORY B-G-2, Pressure Retaining Bolting, 2 in. And Less In Diameter

Pumps

ITEM NUMBER	ID NUMBER	SYS	ISO/DWG NUMBERS	PROC	INSP REQ	MAT/SCH	DIA/THK	CAL BLOCKS	COMMENTS
**** Bolts, Studs, and Nuts ****									
B07.050.011	2NV209-MJ1		CN-2NV-209	QAL-13	VT-1	CS	1.000		Flange Bolting (4 Studs, 8 Nuts). Examine All Bolting Material.
		NV	CN-ISIN3-2554-1.5				5.750		
Class A									
B07.050.012	2NV209-MJ2		CN-2NV-209	QAL-13	VT-1	CS	1.000		Flange Bolting (8 Studs, 16 Nuts). Examine All Bolting Material.
		NV	CN-ISIN3-2554-1.5				7.250		
Class A									
B07.050.013	2NV222-MJ1		CN-2NV-222	QAL-13	VT-1	CS	1.000		Flange Bolting (8 Studs, 16 Nuts). Examine All Bolting Material.
		NV	CN-ISIN3-2554-1.5				7.250		
Class A									
B07.050.014	2NV222-MJ2		CN-2NV-222	QAL-13	VT-1	CS	1.000		Flange Bolting (4 Studs, 8 Nuts). Examine All Bolting Material.
		NV	CN-ISIN3-2554-1.5				5.750		
Class A									

Total B07.050 Items: 4

CATEGORY B-G-2, Pressure Retaining Bolting, 2 in. And Less In Diameter

Valves

ITEM NUMBER	ID NUMBER	SYS	ISO/DWG NUMBERS	PROC	INSP REQ	MAT/SCH	DIA/THK	CAL BLOCKS	COMMENTS
****** Bolts, Studs, and Nuts ******									
B07.060.001	2RCP-2A-S		CN-2NC-009	QAL-13	VT-1	CS	2.000		Reactor Coolant Pump 2A Seal Housing Bolting. No. 1 Seal Housing Cap Screws (12 Bolts). Inspect Bolting On One Reactor Coolant Pump Only.
Class A		NC	CNM 1201.01-115				8.000		
B07.060.002	2RCP-2A-H		CN-2NC-009	QAL-13	VT-1	CS	1.000		Reactor Coolant Pump 2A Seal Housing Bolting. No. 2 Seal Housing Cap Screws (12 Bolts). Inspect Bolting On One Reactor Coolant Pump Only.
Class A		NC	CNM 1201.01-115				3.250		

Total B07.060 Items: 2

DUKE ENERGY CORPORATION
INSERVICE INSPECTION PLAN MANAGEMENT
Inservice Inspection Database Management System
Catawba 2
Inservice Inspection Plan for Interval 3 Outage 2

CATEGORY B-G-2, Pressure Retaining Bolting, 2 in. And Less In Diameter

NPS 4 or Larger

ITEM NUMBER	ID NUMBER	SYS	ISO/DWG NUMBERS	PROC	INSP REQ	MAT/SCH	DIA/THK	CAL BLOCKS	COMMENTS
B07.080.001	2CRD-HOUSING		CNM 2201.01-74/7	QAL-13	VT-1	SS	6.000		Threaded Housing With Seal Weld. Examine Only CRD Bolting That Is Resued When Housing Is Disassembled.
			CNM 2201.01-89				0.000		
Class A									

Total B07.080 Items: 1

Total B07 Items: 9

CATEGORY B-J, Pressure Retaining Welds In Piping

Less Than NPS 4

ITEM NUMBER	ID NUMBER	SYS	ISO/DWG NUMBERS	PROC	INSP REQ	MAT/SCH	DIA/THK	CAL BLOCKS	COMMENTS
B09.011.010	2NC13-2		CN-2NC-013	NDE-12	RT	SS-CS	31.000		Reactor Coolant Loop 2C Hot Leg. Steam Generator 2C Inlet Nozzle Safe End To Pipe. To be done with B05.070.005. Schedule for re-examination in EOC15, EOC17 and EOC20 in accordance with ASME Section XI, Paragraph IWB-2420(b).
	Circumferential	NC	CN-ISIN3-2553-1.0				2.500		
Class A	Term end		CNM 2201.01-0217		Safe End to				
	Dissimilar				Pipe				
B09.011.017	2RPV-W79-101		CNM 2201.01-67	PDI-UT-10	UT	SS-Inconel	6.250	50374	UHI Tube At 270 Degrees. UHI Upper Pc. 108-101 To Lower Adapter Pc. 108-202.
	Circumferential	NC	E 8871-108-002				0.625		
Class A					Upper to				
	Dissimilar				Lower Adapter				
B09.011.017A	2RPV-W79-101		CNM 2201.01-67	NDE-35	PT	SS-Inconel	6.250		UHI Tube At 270 Degrees. UHI Upper Pc. 108-101 To Lower Adapter Pc. 108-202.
	Circumferential	NC	E 8871-108-002				0.625		
Class A					Upper to				
	Dissimilar				Lower Adapter				
B09.011.018	2RPV-W80-101		CNM 2201.01-67	PDI-UT-10	UT	SS-Inconel	6.250	50374	UHI Tube At 0 Degrees. UHI Upper Pc. 108-101 To Lower Adapter Pc. 108-202.
	Circumferential	NC	E 8871-108-002				0.625		
Class A					Upper to				
	Dissimilar				Lower Adapter				
B09.011.018A	2RPV-W80-101		CNM 2201.01-67	NDE-35	PT	SS-Inconel	6.250		UHI Tube At 0 Degrees. UHI Upper Pc. 108-101 To Lower Adapter Pc. 108-202.
	Circumferential	NC	E 8871-108-002				0.625		
Class A					Upper to				
	Dissimilar				Lower Adapter				
B09.011.019	2RPV-W81-101		CNM 2201.01-67	PDI-UT-10	UT	SS-Inconel	6.250	50374	UHI Tube At 90 Degrees. UHI Upper Pc. 108-101 To Lower Adapter Pc. 108-202.
	Circumferential	NC	E 8871-108-002				0.625		
Class A					Upper to				
	Dissimilar				Lower Adapter				
B09.011.019A	2RPV-W81-101		CNM 2201.01-67	NDE-35	PT	SS-Inconel	6.250		UHI Tube At 90 Degrees. UHI Upper Pc. 108-101 To Lower Adapter Pc. 108-202.
	Circumferential	NC	E 8871-108-002				0.625		
Class A					Upper to				
	Dissimilar				Lower Adapter				
B09.011.020	2RPV-W82-101		CNM 2201.01-67	PDI-UT-10	UT	SS-Inconel	6.250	50374	UHI Tube At 180 Degrees. UHI Upper Pc. 108-101 To Lower Adapter Pc. 108-202.
	Circumferential	NC	E 8871-108-002				0.625		
Class A					Upper to				
	Dissimilar				Lower Adapter				

CATEGORY B-J, Pressure Retaining Welds In Piping

Less Than NPS 4

ITEM NUMBER	ID NUMBER	SYS	ISO/DWG NUMBERS	PROC	INSP REQ	MAT/SCH	DIA/THK	CAL BLOCKS	COMMENTS
B09.011.020A Class A	2RPV-W82-101 Circumferential Dissimilar	NC	CNM 2201.01-67 E 8871-108-002	NDE-35	PT Upper to Lower Adapter	SS-Inconel	6.250 0.625		UHI Tube At 180 Degrees. UHI Upper Pc. 108-101 To Lower Adapter Pc. 108-202.
B09.011.024 Class A	2NC117-6 Circumferential	NC	CN-2NC-117 CN-ISIN3-2553-1.1	NDE-600	UT Pipe to Elbow	SS 160	6.000 0.719	Component	Depending on the examiner's qualifications, Procedure PDI-UT-2 may be used in lieu of NDE-600.
B09.011.024A Class A	2NC117-6 Circumferential	NC	CN-2NC-117 CN-ISIN3-2553-1.1	NDE-35	PT Pipe to Elbow	SS 160	6.000 0.719		
B09.011.025 Class A	2NC117-7 Circumferential	NC	CN-2NC-117 CN-ISIN3-2553-1.1	NDE-600	UT Safe End to Elbow	SS 160	6.000 0.719	Component	Pressurizer Relief Line. Depending on the examiner's qualifications, Procedure PDI-UT-2 may be used in lieu of NDE-600.
B09.011.025A Class A	2NC117-7 Circumferential	NC	CN-2NC-117 CN-ISIN3-2553-1.1	NDE-35	PT Safe End to Elbow	SS 160	6.000 0.719		Pressurizer Relief Line.
B09.011.036 Class A	2NC25-4 Circumferential	NC	CN-2NC-25 CN-ISIN3-2553-1.0	NDE-600	UT Pipe to Elbow	SS 160	6.000 0.719	Component	Depending on the examiners qualifications, Procedure PDI-UT-2 may be used in lieu of NDE-600. If PDI-UT-2 is used, Calibration Block PDI-UT-2-C may be used.
B09.011.036A Class A	2NC25-4 Circumferential	NC	CN-2NC-25 CN-ISIN3-2553-1.0	NDE-35	PT Pipe to Elbow	SS 160	6.000 0.719		
B09.011.037 Class A	2NC25-5 Circumferential	NC	CN-2NC-25 CN-ISIN3-2553-1.0	NDE-600	UT Elbow to Valve 2NI157	SS 160	6.000 0.719	Component	Depending on the examiners qualifications, Procedure PDI-UT-2 may be used in lieu of NDE-600. If PDI-UT-2 is used, Calibration Block PDI-UT-2-C may be used.
B09.011.037A Class A	2NC25-5 Circumferential	NC	CN-2NC-25 CN-ISIN3-2553-1.0	NDE-35	PT Elbow to Valve 2NI157	SS 160	6.000 0.719		

CATEGORY B-J, Pressure Retaining Welds In Piping

Less Than NPS 4

ITEM NUMBER	ID NUMBER	SYS	ISO/DWG NUMBERS	PROC	INSP REQ	MAT/SCH	DIA/THK	CAL BLOCKS	COMMENTS
B09.011.044	2NC33-10		CN-2NC-33	NDE-600	UT	SS	4.000	Component	Depending on the examiners qualifications, Procedure PDI-UT-2 may be used in lieu of NDE-600. If PDI-UT-2 is used, Calibration Block PDI-UT-2-C may be used.
	Circumferential	NC	CN-ISIN3-2553-1.1			160	0.513		
Class A					Pipe to Elbow				
B09.011.044A	2NC33-10		CN-2NC-33	NDE-35	PT	SS	4.000		
	Circumferential	NC	CN-ISIN3-2553-1.1			160	0.513		
Class A					Pipe to Elbow				
B09.011.045	2NC33-12		CN-2NC-33	NDE-600	UT	SS	4.000	Component	Depending on the examiners qualifications, Procedure PDI-UT-2 may be used in lieu of NDE-600. If PDI-UT-2 is used, Calibration Block PDI-UT-2-C may be used.
	Circumferential	NC	CN-ISIN3-2553-1.1			160	0.513		
Class A					Pipe to Elbow				
B09.011.045A	2NC33-12		CN-2NC-33	NDE-35	PT	SS	4.000		
	Circumferential	NC	CN-ISIN3-2553-1.1			160	0.513		
Class A					Pipe to Elbow				
B09.011.047	2NC33-16		CN-2NC-33	NDE-600	UT	SS	4.000	Component	Depending on the examiners qualifications, Procedure PDI-UT-2 may be used in lieu of NDE-600. If PDI-UT-2 is used, Calibration Block PDI-UT-2-C may be used.
	Circumferential	NC	CN-ISIN3-2553-1.1			160	0.513		
Class A					Elbow to Pipe				
B09.011.047A	2NC33-16		CN-2NC-33	NDE-35	PT	SS	4.000		
	Circumferential	NC	CN-ISIN3-2553-1.1			160	0.513		
Class A					Elbow to Pipe				
B09.011.051	2NC42-8		CN-2NC-42	NDE-600	UT	SS	12.000	Component	Depending on the examiners qualifications, Procedure PDI-UT-2 may be used in lieu of NDE-600. If PDI-UT-2 is used, Calibration Block PDI-UT-2-C may be used.
	Circumferential	NC	CN-ISIN3-2553-1.0			140	1.125		
Class A					Elbow to Tee				
B09.011.051A	2NC42-8		CN-2NC-42	NDE-35	PT	SS	12.000		
	Circumferential	NC	CN-ISIN3-2553-1.0			140	1.125		
Class A					Elbow to Tee				
B09.011.052	2NC43-13		CN-2NC-43	NDE-600	UT	SS	12.000	Component	Depending on the examiners qualifications, Procedure PDI-UT-2 may be used in lieu of NDE-600. If PDI-UT-2 is used, Calibration Block PDI-UT-2-C may be used.
	Circumferential	NC	CN-ISIN3-2553-1.0			140	1.125		
Class A					Pipe to Nozzle				

CATEGORY B-J, Pressure Retaining Welds In Piping

Less Than NPS 4

ITEM NUMBER	ID NUMBER	SYS	ISO/DWG NUMBERS	PROC	INSP REQ	MAT/SCH	DIA/THK	CAL BLOCKS	COMMENTS
B09.011.052A	2NC43-13		CN-2NC-43	NDE-35	PT	SS	12.000		
	Circumferential	NC	CN-ISIN3-2553-1.0			140	1.125		
Class A					Pipe to Nozzle				
B09.011.053	2NC44-11		CN-2NC-44	NDE-600	UT	SS	6.000	Component	Depending on the examiners qualifications, Procedure PDI-UT-2 may be used in lieu of NDE-600. If PDI-UT-2 is used, Calibration Block PDI-UT-2-C may be used.
	Circumferential	NC	CN-ISIN3-2553-1.1			160	0.719		
Class A					Elbow to Pipe				
B09.011.053A	2NC44-11		CN-2NC-44	NDE-35	PT	SS	6.000		
	Circumferential	NC	CN-ISIN3-2553-1.1			160	0.719		
Class A					Elbow to Pipe				
B09.011.056	2NC44-19		CN-2NC-44	NDE-600	UT	SS	4.000	Component	Depending on the examiners qualifications, Procedure PDI-UT-2 may be used in lieu of NDE-600. If PDI-UT-2 is used, Calibration Block PDI-UT-2-C may be used.
	Circumferential	NC	CN-ISIN3-2553-1.1			160	0.531		
Class A					Pipe to Elbow				
B09.011.056A	2NC44-19		CN-2NC-44	NDE-35	PT	SS	4.000		
	Circumferential	NC	CN-ISIN3-2553-1.1			160	0.531		
Class A					Pipe to Elbow				
B09.011.057	2NC44-28		CN-2NC-44	NDE-600	UT	SS	4.000	Component	Pressurizer Spray Line. Depending on the examiners qualifications, Procedure PDI-UT-2 may be used in lieu of NDE-600. If PDI-UT-2 is used, Calibration Block PDI-UT-2-C may be used.
	Circumferential	NC	CN-ISIN3-2553-1.1			160	0.531		
Class A					Safe End to Elbow				
B09.011.057A	2NC44-28		CN-2NC-44	NDE-35	PT	SS	4.000		Pressurizer Spray Line.
	Circumferential	NC	CN-ISIN3-2553-1.1			160	0.531		
Class A					Safe End to Elbow				
B09.011.058	2NC44-9		CN-2NC-44	NDE-600	UT	SS	6.000	Component	Depending on the examiners qualifications, Procedure PDI-UT-2 may be used in lieu of NDE-600. If PDI-UT-2 is used, Calibration Block PDI-UT-2-C may be used.
	Circumferential	NC	CN-ISIN3-2553-1.1			160	0.719		
Class A					Elbow to Pipe				
B09.011.058A	2NC44-9		CN-2NC-44	NDE-35	PT	SS	6.000		
	Circumferential	NC	CN-ISIN3-2553-1.1			160	0.719		
Class A					Elbow to Pipe				

CATEGORY B-J, Pressure Retaining Welds In Piping

Less Than NPS 4

ITEM NUMBER	ID NUMBER	SYS	ISO/DWG NUMBERS	PROC	INSP REQ	MAT/SCH	DIA/THK	CAL BLOCKS	COMMENTS
B09.011.059	2NC45-2		CN-2NC-45	NDE-600	UT	SS	10.000	Component	Depending on the examiners qualifications, Procedure PDI-UT-2 may be used in lieu of NDE-600. If PDI-UT-2 is used, Calibration Block PDI-UT-2-C may be used.
	Circumferential	NC	CN-ISIN3-2553-1.0			140	1.000		
Class A					Elbow to Pipe				
B09.011.059A	2NC45-2		CN-2NC-45	NDE-35	PT	SS	10.000		
	Circumferential	NC	CN-ISIN3-2553-1.0			140	1.000		
Class A					Elbow to Pipe				
B09.011.060	2NC45-3		CN-2NC-45	NDE-600	UT	SS	10.000	Component	Depending on the examiners qualifications, Procedure PDI-UT-2 may be used in lieu of NDE-600. If PDI-UT-2 is used, Calibration Block PDI-UT-2-C may be used.
	Circumferential	NC	CN-ISIN3-2553-1.0			140	1.000		
Class A					Pipe to Elbow				
B09.011.060A	2NC45-3		CN-2NC-45	NDE-35	PT	SS	10.000		
	Circumferential	NC	CN-ISIN3-2553-1.0			140	1.000		
Class A					Pipe to Elbow				
B09.011.061	2NC46-2		CN-2NC-46	NDE-600	UT	SS	10.000	Component	Depending on the examiners qualifications, Procedure PDI-UT-2 may be used in lieu of NDE-600. If PDI-UT-2 is used, Calibration Block PDI-UT-2-C may be used.
	Circumferential	NC	CN-ISIN3-2553-1.0			140	1.000		
Class A					Pipe to Elbow				
B09.011.061A	2NC46-2		CN-2NC-46	NDE-35	PT	SS	10.000		
	Circumferential	NC	CN-ISIN3-2553-1.0			140	1.000		
Class A					Pipe to Elbow				
B09.011.062	2NC46-4		CN-2NC-46	NDE-600	UT	SS	10.000	Component	Depending on the examiners qualifications, Procedure PDI-UT-2 may be used in lieu of NDE-600. If PDI-UT-2 is used, Calibration Block PDI-UT-2-C may be used.
	Circumferential	NC	CN-ISIN3-2553-1.0			140	1.000		
Class A					Pipe to Elbow				
B09.011.062A	2NC46-4		CN-2NC-46	NDE-35	PT	SS	10.000		
	Circumferential	NC	CN-ISIN3-2553-1.0			140	1.000		
Class A					Pipe to				
B09.011.063	2NC47-4		CN-2NC-47	NDE-600	UT	SS	10.000	Component	Depending on the examiners qualifications, Procedure PDI-UT-2 may be used in lieu of NDE-600. If PDI-UT-2 is used, Calibration Block PDI-UT-2-C may be used.
	Circumferential	NC	CN-ISIN3-2553-1.0			140	1.000		
Class A					Elbow to Pipe				

CATEGORY B-J, Pressure Retaining Welds In Piping

Less Than NPS 4

ITEM NUMBER	ID NUMBER	SYS	ISO/DWG NUMBERS	PROC	INSP REQ	MAT/SCH	DIA/THK	CAL BLOCKS	COMMENTS
B09.011.063A	2NC47-4		CN-2NC-47	NDE-35	PT	SS	10.000		
	Circumferential	NC	CN-ISIN3-2553-1.0			140	1.000		
Class A					Elbow to Pipe				
B09.011.172	2NI57-2		CN-2NI-57	NDE-600	UT	SS	10.000	Component	Depending on the examiners qualifications, Procedure PDI-UT-2 may be used in lieu of NDE-600. If PDI-UT-2 is used, Calibration Block PDI-UT-2-C may be used.
	Circumferential	NI	CN-ISIN3-2562-1.1			140	1.000		
Class A					Pipe to Elbow				
B09.011.172A	2NI57-2		CN-2NI-57	NDE-35	PT	SS	10.000		
	Circumferential	NI	CN-ISIN3-2562-1.1			140	1.000		
Class A					Pipe to Elbow				
B09.011.173	2NI59-1		CN-2NI-59	NDE-600	UT	SS	10.000	Component	Depending on the examiners qualifications, Procedure PDI-UT-2 may be used in lieu of NDE-600. If PDI-UT-2 is used, Calibration Block PDI-UT-2-C may be used.
	Circumferential	NI	CN-ISIN3-2562-1.1			140	1.000		
Class A					Valve 2NI054A to Pipe				
B09.011.173A	2NI59-1		CN-2NI-59	NDE-35	PT	SS	10.000		
	Circumferential	NI	CN-ISIN3-2562-1.1			140	1.000		
Class A					Valve 2NI054A to Pipe				
B09.011.174	2NI59-4		CN-2NI-59	NDE-600	UT	SS	10.000	Component	Depending on the examiners qualifications, Procedure PDI-UT-2 may be used in lieu of NDE-600. If PDI-UT-2 is used, Calibration Block PDI-UT-2-C may be used.
	Circumferential	NI	CN-ISIN3-2562-1.1			140	1.000		
Class A					Elbow to Pipe				
B09.011.174A	2NI59-4		CN-2NI-59	NDE-35	PT	SS	10.000		
	Circumferential	NI	CN-ISIN3-2562-1.1			140	1.000		
Class A					Elbow to Pipe				
B09.011.175	2NI61-3		CN-2NI-61	NDE-600	UT	SS	10.000	Component	Depending on the examiners qualifications, Procedure PDI-UT-2 may be used in lieu of NDE-600. If PDI-UT-2 is used, Calibration Block PDI-UT-2-C may be used.
	Circumferential	NI	CN-ISIN3-2562-1.1			140	1.000		
Class A					Pipe to Elbow				
B09.011.175A	2NI61-3		CN-2NI-61	NDE-35	PT	SS	10.000		
	Circumferential	NI	CN-ISIN3-2562-1.1			140	1.000		
Class A					Pipe to Elbow				

CATEGORY B-J, Pressure Retaining Welds In Piping

Less Than NPS 4

ITEM NUMBER	ID NUMBER	SYS	ISO/DWG NUMBERS	PROC	INSP REQ	MAT/SCH	DIA/THK	CAL BLOCKS	COMMENTS
B09.011.176	2NI61-5		CN-2NI-61	NDE-600	UT	SS	10.000	Component	Depending on the examiners qualifications, Procedure PDI-UT-2 may be used in lieu of NDE-600. If PDI-UT-2 is used, Calibration Block PDI-UT-2-C may be used.
	Circumferential	NI	CN-ISIN3-2562-1.1			140	1.000		
Class A					Pipe to Elbow				
B09.011.176A	2NI61-5		CN-2NI-61	NDE-35	PT	SS	10.000		
	Circumferential	NI	CN-ISIN3-2562-1.1			140	1.000		
Class A					Pipe to Elbow				

Total B09.011 Items: 55

CATEGORY B-J, Pressure Retaining Welds In Piping

Branch Pipe Connection Welds

ITEM NUMBER	ID NUMBER	SYS	ISO/DWG NUMBERS	PROC	INSP REQ	MAT/SCH	DIA/THK	CAL BLOCKS	COMMENTS
B09.021.015	2NC44-21		CN-2NC-44	NDE-35	PT	SS	2.000		
	Circumferential	NC	CN-ISIN3-2553-1.1			160	0.344		
Class A					Pipe to Elbow				
B09.021.016	2NC44-23		CN-2NC-44	NDE-35	PT	SS	2.000		
	Circumferential	NC	CN-ISIN3-2553-1.1			160	0.344		
Class A					Pipe to Elbow				
B09.021.017	2NC51-1		CN-2NC-51	NDE-35	PT	SS	3.000		
	Circumferential	NC	CN-ISIN3-2553-1.0			160	0.438		
Class A	Stress weld				Valve 2NV041 to Pipe				
B09.021.018	2NC51-5		CN-2NC-51	NDE-35	PT	SS	3.000		
	Circumferential	NC	CN-ISIN3-2553-1.0			160	0.438		
Class A					Elbow to Pipe				
B09.021.019	2NC51-8		CN-2NC-51	NDE-35	PT	SS	3.000		
	Circumferential	NC	CN-ISIN3-2553-1.0			160	0.438		
Class A					Pipe to Elbow				
B09.021.020	2NC52-6		CN-2NC-52	NDE-35	PT	SS	3.000		
	Circumferential	NC	CN-ISIN3-2553-1.0			160	0.438		
Class A					Pipe to Elbow				
B09.021.021	2NC52-7		CN-2NC-52	NDE-35	PT	SS	3.000		
	Circumferential	NC	CN-ISIN3-2553-1.0			160	0.438		
Class A					Elbow to Pipe				
B09.021.022	2NC52-8		CN-2NC-52	NDE-35	PT	SS	3.000		
	Circumferential	NC	CN-ISIN3-2553-1.0			160	0.438		
Class A	Stress weld				Pipe to Valve 2NV034				

CATEGORY B-J, Pressure Retaining Welds In Piping

Branch Pipe Connection Welds

ITEM NUMBER	ID NUMBER	SYS	ISO/DWG NUMBERS	PROC	INSP REQ	MAT/SCH	DIA/THK	CAL BLOCKS	COMMENTS
B09.021.023	2NC53-2		CN-2NC-53	NDE-35	PT	SS	3.000		
	Circumferential	NC	CN-ISIN3-2553-1.0			160	0.438		
Class A					Pipe to Elbow				
B09.021.024	2NC53-22		CN-2NC-53	NDE-35	PT	SS	3.000		
	Circumferential	NC	CN-ISIN3-2553-1.0			160	0.438		
Class A					Pipe to Pipe				
B09.021.025	2NC53-3		CN-2NC-53	NDE-35	PT	SS	3.000		
	Circumferential	NC	CN-ISIN3-2553-1.0			160	0.438		
Class A					Elbow to Pipe				

Total B09.021 Items: 11

CATEGORY B-J, Pressure Retaining Welds In Piping

Pressure Vessels

ITEM NUMBER	ID NUMBER	SYS	ISO/DWG NUMBERS	PROC	INSP REQ	MAT/SCH	DIA/THK	CAL BLOCKS	COMMENTS
****** Welded Attachments ******									
B09.040.051	2NI274-1		CN-2NI-274	NDE-35	PT	SS	2.000		
	Socket	NI	CN-ISIN3-2562-1.0			160	0.344		
Class A					Reducing Insert to Valve 2NI352				
B09.040.052	2NI274-2		CN-2NI-274	NDE-35	PT	SS	2.000		
	Socket	NI	CN-ISIN3-2562-1.0			160	0.344		
Class A					Valve 2NI352 to Reducing Insert				
B09.040.053	2NI274-5		CN-2NI-274	NDE-35	PT	SS	2.000		
	Socket	NI	CN-ISIN3-2562-1.0			160	0.344		
Class A					Reducing Insert to Valve 2NI017				

Total B09.040 Items: 3

Total B09 Items: 69

CATEGORY B-K, Welded Attachments For Vessels, Piping, Pumps, And Valves

Piping

ITEM NUMBER	ID NUMBER	SYS	ISO/DWG NUMBERS	PROC	INSP REQ	MAT/SCH	DIA/THK	CAL BLOCKS	COMMENTS
****** Welded Attachments ******									
B10.010.002	2PZR-W10A		CNM 2201.01-110/1	NDE-25	MT	CS	4.000		Pressurizer Seismic Lug To Shell (Welded Attachment). Y-Z Quadrant.
		NC	CN-ISIN3-2553-1.1				4.000		
Class A			CNM 2201.01-110/2		Seismic Lug to Shell				

Total B10.010 Items: 1

Total B10 Items: 1

CATEGORY B-L-2, Pump Casings

Valves

ITEM NUMBER	ID NUMBER	SYS	ISO/DWG NUMBERS	PROC	INSP REQ	MAT/SCH	DIA/THK	CAL BLOCKS	COMMENTS
****** Valves, Less Than NPS 4; Valve Body Welds ******									
B12.020.001	2RCP-2A		CN-2NC-9	QAL-14	VT-3	SS	77.000		Reactor Coolant Pump 2A Casing Internal Surfaces. Only One Pump Required To Be Examined Per Interval. Inspect Only If Pump Is Disassembled For Maintenance, Repair, Or Volumetric Examination.
Class A		NC	CNM-1201.01-115				4.500		
B12.020.002	2RCP-2B		CN-2NC-11	QAL-14	VT-3	SS	77.000		Reactor Coolant Pump 2B Casing Internal Surfaces. Only One Pump Required To Be Examined Per Interval. Inspect Only If Pump Is Disassembled For Maintenance, Repair, Or Volumetric Examination.
Class A		NC	CNM-1201.01-115				4.500		
B12.020.003	2RCP-2C		CN-2NC-13	QAL-14	VT-3	SS	77.000		Reactor Coolant Pump 2C Casing Internal Surfaces. Only One Pump Required To Be Examined Per Interval. Inspect Only If Pump Is Disassembled For Maintenance, Repair, Or Volumetric Examination.
Class A		NC	CNM-1201.01-115				4.500		
B12.020.004	2RCP-2D		CN-2NC-15	QAL-14	VT-3	SS	77.000		Reactor Coolant Pump 2D Casing Internal Surfaces. Only One Pump Required To Be Examined Per Interval. Inspect Only If Pump Is Disassembled For Maintenance, Repair, Or Volumetric Examination.
Class A		NC	CNM-1201.01-115				4.500		

Total B12.020 Items: 4

CATEGORY B-M-2, Valve Body

Reactor Vessel

ITEM NUMBER	ID NUMBER	SYS	ISO/DWG NUMBERS	PROC	INSP REQ	MAT/SCH	DIA/THK	CAL BLOCKS	COMMENTS
**** Vessel Interior ****									
B12.050.001A Class A	2NC-1	NC	CN-2NC-112 CNM-1205.09-01	QAL-14	VT-3	SS 160	6.000 0.719		6" Relief Valve. Inspect One Of The Following Valves: 2NC-1, 2NC-2, Or 2NC-3. Inspect Only If Disassembled For Maintenance, Repair, Or Volumetric Examination.
B12.050.001B Class A	2NC-2	NC	CN-2NC-119 CNM-1205.09-01	QAL-14	VT-3	SS 160	6.000 0.719		6" Relief Valve. Inspect One Of The Following Valves: 2NC-1, 2NC-2, Or 2NC-3. Inspect Only If Disassembled For Maintenance, Repair, Or Volumetric Examination.
B12.050.001C Class A	2NC-3	NC	CN-2NC-163 CNM-1205.09-01	QAL-14	VT-3	SS 160	6.000 0.719		6" Relief Valve. Inspect One Of The Following Valves: 2NC-1, 2NC-2, Or 2NC-3. Inspect Only If Disassembled For Maintenance, Repair, Or Volumetric Examination.
B12.050.002A Class A	2NC-27	NC	CN-2NC-24 CNM-1205.06-41	QAL-14	VT-3	SS 160	6.000 0.719		6" Fisher Control Valve. Inspect One Of The Following Valves: 2NC-27, Or 2NC-29. Inspect Only If Disassembled For Maintenance, Repair, Or Volumetric Examination.
B12.050.002B Class A	2NC-29	NC	CN-2NC-33 CNM-1205.06-41	QAL-14	VT-3	SS 160	6.000 0.719		6" Fisher Control Valve. Inspect One Of The Following Valves: 2NC-27, Or 2NC-29. Inspect Only If Disassembled For Maintenance, Repair, Or Volumetric Examination.
B12.050.003A Class A	2ND-36B	ND	CN-2ND-66 CNM-1205.00-262	QAL-14	VT-3	SS 140	12.000 2.043		12" Borg Warner Gate Valve. Inspect One Of The Following Valves: 2ND-1B, 2ND-2A, 2ND-36B, Or 2ND-37A. Inspect Only If Disassembled For Maintenance, Repair, Or Volumetric Examination.
B12.050.003B Class A	2ND-37A	ND	CN-2ND-66 CNM-1205.00-262	QAL-14	VT-3	SS 140	12.000 2.043		12" Borg Warner Gate Valve. Inspect One Of The Following Valves: 2ND-1B, 2ND-2A, 2ND-36B, Or 2ND-37A. Inspect Only If Disassembled For Maintenance, Repair, Or Volumetric Examination.
B12.050.003C Class A	2ND-1B	ND	CN-2ND-67 CNM-1205.00-262	QAL-14	VT-3	SS 140	12.000 2.043		12" Borg Warner Gate Valve. Inspect One Of The Following Valves: 2ND-1B, 2ND-2A, 2ND-36B, Or 2ND-37A. Inspect Only If Disassembled For Maintenance, Repair, Or Volumetric Examination.

CATEGORY B-M-2, Valve Body

Reactor Vessel

Catawba 2
Inservice Inspection Plan for Interval 3 Outage 2

ITEM NUMBER	ID NUMBER	SYS	ISO/DWG NUMBERS	PROC	INSP REQ	MAT/SCH	DIA/THK	CAL BLOCKS	COMMENTS
B12.050.003D Class A	2ND-2A	ND	CN-2ND-67 CNM-1205.00-262	QAL-14	VT-3	SS 140	12.000 2.043		12" Borg Warner Gate Valve. Inspect One Of The Following Valves: 2ND-1B, 2ND-2A, 2ND-36B, Or 2ND-37A. Inspect Only If Disassembled For Maintenance, Repair, Or Volumetric Examination.
B12.050.004A Class A	2NI-126	NI	CN-2NI-379 CNM-1205.00-63	QAL-14	VT-3	SS 160	6.000 0.719		6" Westinghouse Check Valve. Inspect One Of The Following Valves: 2NI-126, 2NI-134, 2NI-157, 2NI-160, 2NI-175, 2NI-176, 2NI-180, Or 2NI-181. Inspect Only If Disassembled For Maintenance, Repair, Or Volumetric Examination.
B12.050.004B Class A	2NI-134	NI	CN-2NI-91 CNM-1205.00-63	QAL-14	VT-3	SS 160	6.000 0.719		6" Westinghouse Check Valve. Inspect One Of The Following Valves: 2NI-126, 2NI-134, 2NI-157, 2NI-160, 2NI-175, 2NI-176, 2NI-180, Or 2NI-181. Inspect Only If Disassembled For Maintenance, Repair, Or Volumetric Examination.
B12.050.004C Class A	2NI-157	NI	CN-2NI-398 CNM-1205.00-63	QAL-14	VT-3	SS 160	6.000 0.719		6" Westinghouse Check Valve. Inspect One Of The Following Valves: 2NI-126, 2NI-134, 2NI-157, 2NI-160, 2NI-175, 2NI-176, 2NI-180, Or 2NI-181. Inspect Only If Disassembled For Maintenance, Repair, Or Volumetric Examination.
B12.050.004D Class A	2NI-160	NI	CN-2NI-396 CNM-1205.00-63	QAL-14	VT-3	SS 160	6.000 0.719		6" Westinghouse Check Valve. Inspect One Of The Following Valves: 2NI-126, 2NI-134, 2NI-157, 2NI-160, 2NI-175, 2NI-176, 2NI-180, Or 2NI-181. Inspect Only If Disassembled For Maintenance, Repair, Or Volumetric Examination.
B12.050.004E Class A	2NI-175	NI	CN-2NI-70 CNM-1205.00-63	QAL-14	VT-3	SS 160	6.000 0.719		6" Westinghouse Check Valve. Inspect One Of The Following Valves: 2NI-126, 2NI-134, 2NI-157, 2NI-160, 2NI-175, 2NI-176, 2NI-180, Or 2NI-181. Inspect Only If Disassembled For Maintenance, Repair, Or Volumetric Examination.
B12.050.004F Class A	2NI-176	NI	CN-2NI-77 CNM-1205.00-63	QAL-14	VT-3	SS 160	6.000 0.719		6" Westinghouse Check Valve. Inspect One Of The Following Valves: 2NI-126, 2NI-134, 2NI-157, 2NI-160, 2NI-175, 2NI-176, 2NI-180, Or 2NI-181. Inspect Only If Disassembled For Maintenance, Repair, Or Volumetric Examination.

ITEM NUMBER	ID NUMBER	SYS	ISO/DWG NUMBERS	PROC	INSP REQ	MAT/SCH	DIA/THK	CAL BLOCKS	COMMENTS
B12.050.004G	2NI-180		CN-2NI-145	QAL-14	VT-3	SS	6.000		6" Westinghouse Check Valve. Inspect One Of The Following Valves: 2NI-126, 2NI-134, 2NI-157, 2NI-160, 2NI-175, 2NI-176, 2NI-180, Or 2NI-181. Inspect Only If Disassembled For Maintenance, Repair, Or Volumetric Examination.
Class A		NI	CNM-1205.00-63			160	0.719		
B12.050.004H	2NI-181		CN-2NI-75	QAL-14	VT-3	SS	6.000		6" Westinghouse Check Valve. Inspect One Of The Following Valves: 2NI-126, 2NI-134, 2NI-157, 2NI-160, 2NI-175, 2NI-176, 2NI-180, Or 2NI-181. Inspect Only If Disassembled For Maintenance, Repair, Or Volumetric Examination.
Class A		NI	CNM-1205.00-63			160	0.719		
B12.050.005A	2NI-54A		CN-2NI-59	QAL-14	VT-3	SS	10.000		10" Westinghouse Gate Valve. Inspect One Of The Following Valves: 2NI-54A, 2NI-65B, 2NI-76A, Or 2NI-88B. Inspect Only If Disassembled For Maintenance, Repair, Or Volumetric Examination.
Class A		NI	CNM-1205.00-71			140	1.000		
B12.050.005B	2NI-65B		CN-2NI-61	QAL-14	VT-3	SS	10.000		10" Westinghouse Gate Valve. Inspect One Of The Following Valves: 2NI-54A, 2NI-65B, 2NI-76A, Or 2NI-88B. Inspect Only If Disassembled For Maintenance, Repair, Or Volumetric Examination.
Class A		NI	CNM-1205.00-71			140	1.000		
B12.050.005C	2NI-76A		CN-2NI-63	QAL-14	VT-3	SS	10.000		10" Westinghouse Gate Valve. Inspect One Of The Following Valves: 2NI-54A, 2NI-65B, 2NI-76A, Or 2NI-88B. Inspect Only If Disassembled For Maintenance, Repair, Or Volumetric Examination.
Class A		NI	CNM-1205.00-71			140	1.000		
B12.050.005D	2NI-88B		CN-2NI-57	QAL-14	VT-3	SS	10.000		10" Westinghouse Gate Valve. Inspect One Of The Following Valves: 2NI-54A, 2NI-65B, 2NI-76A, Or 2NI-88B. Inspect Only If Disassembled For Maintenance, Repair, Or Volumetric Examination.
Class A		NI	CNM-1205.00-71			140	1.000		
B12.050.006A	2NI-59		CN-2NI-184	QAL-14	VT-3	SS	10.000		10" Westinghouse Check Valve. Inspect One Of The Following Valves: 2NI-59, 2NI-60, 2NI-70, 2NI-71, 2NI-81, 2NI-82, 2NI-93, Or 2NI-94. Inspect Only If Disassembled For Maintenance, Repair, Or Volumetric Examination.
Class A		NI	CNM-1205.00-62			140	1.000		
B12.050.006B	2NI-60		CN-2NI-184	QAL-14	VT-3	SS	10.000		10" Westinghouse Check Valve. Inspect One Of The Following Valves: 2NI-59, 2NI-60, 2NI-70, 2NI-71, 2NI-81, 2NI-82, 2NI-93, Or 2NI-94. Inspect Only If Disassembled For Maintenance, Repair, Or Volumetric Examination.
Class A		NI	CNM-1205.00-62			140	1.000		

CATEGORY B-M-2, Valve Body

Reactor Vessel

ITEM NUMBER	ID NUMBER	SYS	ISO/DWG NUMBERS	PROC	INSP REQ	MAT/SCH	DIA/THK	CAL BLOCKS	COMMENTS
B12.050.006C Class A	2NI-70	NI	CN-2NI-185 CNM-1205.00-62	QAL-14	VT-3	SS 140	10.000 1.000		10" Westinghouse Check Valve. Inspect One Of The Following Valves: 2NI-59, 2NI-60, 2NI-70, 2NI-71, 2NI-81, 2NI-82, 2NI-93, Or 2NI-94. Inspect Only If Disassembled For Maintenance, Repair, Or Volumetric Examination.
B12.050.006D Class A	2NI-71	NI	CN-2NI-185 CNM-1205.00-62	QAL-14	VT-3	SS 140	10.000 1.000		10" Westinghouse Check Valve. Inspect One Of The Following Valves: 2NI-59, 2NI-60, 2NI-70, 2NI-71, 2NI-81, 2NI-82, 2NI-93, Or 2NI-94. Inspect Only If Disassembled For Maintenance, Repair, Or Volumetric Examination.
B12.050.006E Class A	2NI-81	NI	CN-2NI-55 CNM-1205.00-62	QAL-14	VT-3	SS 140	10.000 1.000		10" Westinghouse Check Valve. Inspect One Of The Following Valves: 2NI-59, 2NI-60, 2NI-70, 2NI-71, 2NI-81, 2NI-82, 2NI-93, Or 2NI-94. Inspect Only If Disassembled For Maintenance, Repair, Or Volumetric Examination.
B12.050.006F Class A	2NI-82	NI	CN-2NI-55 CNM-1205.00-62	QAL-14	VT-3	SS 140	10.000 1.000		10" Westinghouse Check Valve. Inspect One Of The Following Valves: 2NI-59, 2NI-60, 2NI-70, 2NI-71, 2NI-81, 2NI-82, 2NI-93, Or 2NI-94. Inspect Only If Disassembled For Maintenance, Repair, Or Volumetric Examination.
B12.050.006G Class A	2NI-93	NI	CN-2NI-183 CNM-1205.00-62	QAL-14	VT-3	SS 140	10.000 1.000		10" Westinghouse Check Valve. Inspect One Of The Following Valves: 2NI-59, 2NI-60, 2NI-70, 2NI-71, 2NI-81, 2NI-82, 2NI-93, Or 2NI-94. Inspect Only If Disassembled For Maintenance, Repair, Or Volumetric Examination.
B12.050.006H Class A	2NI-94	NI	CN-2NI-183 CNM-1205.00-62	QAL-14	VT-3	SS 140	10.000 1.000		10" Westinghouse Check Valve. Inspect One Of The Following Valves: 2NI-59, 2NI-60, 2NI-70, 2NI-71, 2NI-81, 2NI-82, 2NI-93, Or 2NI-94. Inspect Only If Disassembled For Maintenance, Repair, Or Volumetric Examination.
B12.050.007A Class A	2NI-125	NI	CN-2NI-94 CNM-1205.00-59	QAL-14	VT-3	SS 160	8.000 0.906		8" Westinghouse Check Valve. Inspect One Of The Following Valves: 2NI-125 Or 2N1-129. Inspect Only If Disassembled For Maintenance, Repair, Or Volumetric Examination.

CATEGORY B-M-2, Valve Body

Reactor Vessel

ITEM NUMBER	ID NUMBER	SYS	ISO/DWG NUMBERS	PROC	INSP REQ	MAT/SCH	DIA/THK	CAL BLOCKS	COMMENTS
B12.050.007B	2NI-129		CN-2NI-92	QAL-14	VT-3	SS	8.000		8" Westinghouse Check Valve. Inspect One Of The Following Valves: 2NI-125 Or 2N1-129. Inspect Only If Disassembled For Maintenance, Repair, Or Volumetric Examination.
		NI	CNM-1205.00-59			160	0.906		
Class A									

Total B12.050 Items: 31

Total B12 Items: 35

CATEGORY C-A, Pressure Retaining Welds in Pressure Vessels

Head Circumferential Welds

ITEM NUMBER	ID NUMBER	SYS	ISO/DWG NUMBERS	PROC	INSP REQ	MAT/SCH	DIA/THK	CAL BLOCKS	COMMENTS
C01.010.004	2ELDHX-SH-FLG		CN-ISIN3-2554-1.0	NDE-3630	UT	CS	8.625	50310	Excess Letdown Heat Exchanger Shell Pc.10 to Flange Pc.3.
	Circumferential	NV	CNM 1201.06-37				0.322		
Class B					Shell to Flange				
C01.010.007	2ARHRHX-5-9		CN-ISIN3-2561-1.0	NDE-12	RT	SS	44.000		Residual Heat Removal Heat Exchanger 2A Shell Pc.5 To Flange Pc.9.
	Circumferential	ND	CNM 1201.06-38				0.875		
Class B					Shell to Flange				
C01.010.008	2BNSHX-50-51A		CN-ISIN3-2563-1.0	NDE-3630	UT	SS	0.000	50380	NS Heat Exchanger 2B Shell Cylinder PC.50 to Shell Cylinder Pc.51A.
	Circumferential	NS	CNM 1201.06-0123				0.625	50420	
Class B					Shell to Shell				

Total C01.010 Items: 3

CATEGORY C-A, Pressure Retaining Welds In Pressure Vessels

Tubesheet-to-Shell Weld

ITEM NUMBER	ID NUMBER	SYS	ISO/DWG NUMBERS	PROC	INSP REQ	MAT/SCH	DIA/THK	CAL BLOCKS	COMMENTS
C01.020.002 Class B	2ELDHX-HD-FLG Circumferential	NV	CN-ISIN3-2554-1.0 CNM 1201.06-37	NDE-3630	UT Head to Flange Flange	SS-CS	9.500 0.750	*CB0803	Excess Letdown Heat Exchanger Elliptical Head Pc.5 To Flange Pc.4. *Examine from carbon steel side only.
C01.020.003 Class B	2ELDHX-SH-HD Circumferential	NV	CN-ISIN3-2554-1.0 CNM 1201.06-37	NDE-3630	UT Shell to Head	CS	8.625 0.322	50310	Excess Letdown Heat Exchanger Shell Pc.10 To Head Pc.11.
C01.020.013 Class B	2ARHRHX-5-6 Circumferential	ND	CN-ISIN3-2561-1.1 CNM 1201.06-38	NDE-3630	UT Shell to Lower Head	SS	44.000 0.770	50380	Residual Heat Removal Heat Exchanger 2A Shell Pc.5 to Lower Head Pc.6.

Total C01.020 Items: 3

CATEGORY C-A, Pressure Retaining Welds In Pressure Vessels

Nozzles in Vessels <= 1/2 in. Nominal Thickness

ITEM NUMBER	ID NUMBER	SYS	ISO/DWG NUMBERS	PROC	INSP REQ	MAT/SCH	DIA/THK	CAL BLOCKS	COMMENTS
C01.030.008	2BNSHX-2B-51C		CN-ISIN3-2563-1.0	NDE-3630	UT	SS	0.000	50420	NS Heat Exchanger 2B Top Tubesheet Pc.2B to Shell Cylinder Pc.51C.
	Circumferential	NS	CNM 1201.06-0123				0.500		
Class B					Tubesheet to Shell				
C01.030.009	2BNSHX-2A-50		CN-ISIN3-2563-1.0	NDE-3630	UT	SS	0.000	50420	2B NS Heat Exchanger Bottom Tubesheet Pc.2A to Shell Cylinder Pc.50.
	Circumferential	NS	CNM 1201.06-0123				0.625		
Class B					Tubsheet to Shell				

Total C01.030 Items: 2

Total C01 Items: 8

CATEGORY C-B, Pressure Retaining Nozzle Welds In Vessels

Nozzles With Reinforcing Plate in Vessels > 1/2 in. Nom. Thickness

ITEM NUMBER	ID NUMBER	SYS	ISO/DWG NUMBERS	PROC	INSP REQ	MAT/SCH	DIA/THK	CAL BLOCKS	COMMENTS
****** Noz-to-Shell (Noz to Hd or Noz to Noz) Welds-ID of RV is Accessible ******									
C02.031.001	2NSHXB-NA-1		CNM 1201.06-0122	NDE-35	PT	SS	0.000		Containment Spray Heat Exchanger 2B Inlet Nozzle A Pc.66 to Reinforcing Pad Pc.67.
	Circumferential	NS	CN-ISIN3-2563-1.0				1.000		
Class B					Nozzle to Reinforcing Pad				
C02.031.002	2NSHXB-NB-1		CNM 1201.06-0122	NDE-35	PT	SS	0.000		Containment Spray Heat Exchanger 2B Outlet Nozzle B Pc.66 to Reinforcing Pad Pc.67.
	Circumferential	NS	CN-ISIN3-2563-1.0				1.000		
Class B					Nozzle to Reinforcing Pad				
C02.031.003	2NSHXB-NA-2		CNM 1201.06-0122	NDE-35	PT	SS	0.000		Containment Spray Heat Exchanger 2B Inlet Nozzle A Reinforcing Pad Pc.67 to Shell Cylinder Pc.50.
	Circumferential	NS	CN-ISIN3-2563-1.0				1.000		
Class B					Reinforcing Pad to Shell				
C02.031.004	2NSHXB-NB-2		CNM 1201.06-0122	NDE-35	PT	SS	0.000		Containment Spray Heat Exchanger 2B Outlet Nozzle B Reinforcing Pad Pc.67 to Shell Cylinder PC.50.
	Circumferential	NS	CN-ISIN3-2563-1.0				1.000		
Class B					Reinforcing Pad to Shell				

Total C02.031 Items: 4

Total C02 Items: 4

CATEGORY C-C, Welded Attachments For Vessels, Piping, Pumps, And Valves

Piping

ITEM NUMBER	ID NUMBER	SYS	ISO/DWG NUMBERS	PROC	INSP REQ	MAT/SCH	DIA/THK	CAL BLOCKS	COMMENTS
****** Welded Attachments ******									
C03.010.001	2RHRHXA-6-23		CNM 1201.06-38	NDE-35	PT	SS	0.000		Residual Heat Removal Heat Exchanger 2A Lower Head Pc.6 To Support Skirt Pc.23.
	Circumferential	ND	CN-ISIN3-2561-1.1				0.750		
Class B			CNM 1201.06-83		Lower Head to Support Skirt				
C03.010.023	2ELDHX-SUPPORT		CNM 1201.06-37	NDE-35	PT	SS	0.000		Excess Letdown Heat Exchanger.
	Rigid Support	NV	CN-ISIN3-2554-1.0				0.375		
Class B					Plate to Shell				

Total C03.010 Items: 2

CATEGORY C-C, Welded Attachments For Vessels, Piping, Pumps, And Valves

Pumps

ITEM NUMBER	ID NUMBER	SYS	ISO/DWG NUMBERS	PROC	INSP REQ	MAT/SCH	DIA/THK	CAL BLOCKS	COMMENTS
****** Welded Attachments ******									
C03.020.001	2-R-CA-1533		CN-2491-CA022	NDE-25	MT	CS	2.000		
	Rigid Support	CA	CN-ISIN3-2592-1.1				0.218		
Class B									
C03.020.011	2-R-CF-1521		CN-2491-CF002	NDE-25	MT	CS	18.000		
	Rigid Support	CF	CN-ISIN3-2591-1.1				0.750		
Class B									
C03.020.031	2-R-ND-0019		CN-2492-ND006	NDE-35	PT	SS	8.000		
	Rigid Support	ND	CN-ISIN3-2561-1.0				0.750		
Class B									
C03.020.041	2-R-NI-1676		CN-2491-NI037	NDE-35	PT	SS	6.000		
	Rigid Restraint	NI	CN-ISIN3-2562-1.3				0.500		
Class B									
C03.020.052	2-R-NS-0086		CN-2492-NS014	NDE-35	PT	SS	10.000		
	Spring Hgr	NS	CN-ISIN3-2563-1.0				0.500		
Class B									
C03.020.074	2-R-SM-1559		CN-2491-SM003	NDE-25	MT	CS	34.000		
	Rigid Support	SM	CN-ISIN3-2593-1.0				0.750		
Class B									

Total C03.020 Items: 6

Total C03 Items: 8

CATEGORY C-F-1, Pressure Retaining Welds In Austenitic SS Or High Alloy Piping

Piping Welds > 1/5 in. Nom Wall for Piping >= NPS 2 and <= NPS 4

****** Piping Welds > 1/5 in. Nom Wall For Piping >= NPS 2 And <= NPS 4 ******

ITEM NUMBER	ID NUMBER	SYS	ISO/DWG NUMBERS	PROC	INSP REQ	MAT/SCH	DIA/THK	CAL BLOCKS	COMMENTS
C05.011.010	2CA155-24		CN-2CA-155	NDE-600	UT	SS	6.000	Component	Depending on the examiners qualifications, Procedure PDI-UT-2 may be used in lieu of NDE-600. If PDI-UT-2 is used, Calibration Block PDI-UT-2-C may be used.
	Circumferential	CA	CN-ISIN3-2592-1.1			80	0.432		
Class B					Pipe to Elbow				
C05.011.010A	2CA155-24		CN-2CA-155	NDE-35	PT	SS	6.000		
	Circumferential	CA	CN-ISIN3-2592-1.1			80	0.432		
Class B					Pipe to Elbow				
C05.011.011	2CA155-26		CN-2CA-155	NDE-600	UT	SS	6.000	Component	Depending on the examiners qualifications, Procedure PDI-UT-2 may be used in lieu of NDE-600. If PDI-UT-2 is used, Calibration Block PDI-UT-2-C may be used.
	Circumferential	CA	CN-ISIN3-2592-1.1			80	0.432		
Class B					Pipe to Elbow				
C05.011.011A	2CA155-26		CN-2CA-155	NDE-35	PT	SS	6.000		
	Circumferential	CA	CN-ISIN3-2592-1.1			80	0.432		
Class B					Pipe to Elbow				
C05.011.012	2CA155-27		CN-2CA-155	NDE-600	UT	SS	6.000	Component	Depending on the examiners qualifications, Procedure PDI-UT-2 may be used in lieu of NDE-600. If PDI-UT-2 is used, Calibration Block PDI-UT-2-C may be used.
	Circumferential	CA	CN-ISIN3-2592-1.1			80	0.432		
Class B					Elbow to Pipe				
C05.011.012A	2CA155-27		CN-2CA-155	NDE-35	PT	SS	6.000		
	Circumferential	CA	CN-ISIN3-2592-1.1			80	0.432		
Class B					Elbow to Pipe				
C05.011.186	2ND5-13		CN-2ND-5	NDE-600	UT	SS	14.000	Component	Residual Heat Removal Pump 2A. Depending on the examiners qualifications, Procedure PDI-UT-2 may be used in lieu of NDE-600. If PDI-UT-2 is used, Calibration Block PDI-UT-2-C may be used.
	Circumferential	ND	CN-ISIN3-2561-1.0			40	0.438		
Class B	Term end				Flange to RHR Pump 2A				
C05.011.186A	2ND5-13		CN-2ND-5	NDE-35	PT	SS	14.000		Residual Heat Removal Pump 2A.
	Circumferential	ND	CN-ISIN3-2561-1.0			40	0.438		
Class B	Term end				Flange to RHR Pump 2A				

DUKE ENERGY CORPORATION
INSERVICE INSPECTION PLAN MANAGEMENT
Inservice Inspection Database Management System
Catawba 2
Inservice Inspection Plan for Interval 3 Outage 2

CATEGORY C-F-1, Pressure Retaining Welds In Austenitic SS Or High Alloy Piping

Piping Welds > 1/5 in. Nom Wall for Piping >= NPS 2 and <= NPS 4

ITEM NUMBER	ID NUMBER	SYS	ISO/DWG NUMBERS	PROC	INSP REQ	MAT/SCH	DIA/THK	CAL BLOCKS	COMMENTS
C05.011.187 Class B	2ND5-5 Circumferential	ND	CN-2ND-5 CN-ISIN3-2561-1.0	NDE-600	UT Flange to Pipe	SS 40	14.000 0.438	Component	Depending on the examiners qualifications, Procedure PDI-UT-2 may be used in lieu of NDE-600. If PDI-UT-2 is used, Calibration Block PDI-UT-2-C may be used.
C05.011.187A Class B	2ND5-5 Circumferential	ND	CN-2ND-5 CN-ISIN3-2561-1.0	NDE-35	PT Flange to Pipe	SS 40	14.000 0.438		
C05.011.188 Class B	2ND5-6 Circumferential	ND	CN-2ND-5 CN-ISIN3-2561-1.0	NDE-600	UT Pipe to Elbow	SS 40	14.000 0.438	Component	Depending on the examiners qualifications, Procedure PDI-UT-2 may be used in lieu of NDE-600. If PDI-UT-2 is used, Calibration Block PDI-UT-2-C may be used.
C05.011.188A Class B	2ND5-6 Circumferential	ND	CN-2ND-5 CN-ISIN3-2561-1.0	NDE-35	PT Pipe to Elbow	SS 40	14.000 0.438		
C05.011.189 Class B	2ND5-7 Circumferential	ND	CN-2ND-5 CN-ISIN3-2561-1.0	NDE-600	UT Elbow to Pipe	SS 40	14.000 0.438	Component	Depending on the examiners qualifications, Procedure PDI-UT-2 may be used in lieu of NDE-600. If PDI-UT-2 is used, Calibration Block PDI-UT-2-C may be used.
C05.011.189A Class B	2ND5-7 Circumferential	ND	CN-2ND-5 CN-ISIN3-2561-1.0	NDE-35	PT Elbow to Pipe	SS 40	14.000 0.438		
C05.011.190 Class B	2ND5-8 Circumferential	ND	CN-2ND-5 CN-ISIN3-2561-1.0	NDE-600	UT Pipe to Flange	SS 40	14.000 0.438	Component	Depending on the examiners qualifications, Procedure PDI-UT-2 may be used in lieu of NDE-600. If PDI-UT-2 is used, Calibration Block PDI-UT-2-C may be used.
C05.011.190A Class B	2ND5-8 Circumferential	ND	CN-2ND-5 CN-ISIN3-2561-1.0	NDE-35	PT Pipe to Flange	SS 40	14.000 0.438		
C05.011.191 Class B	2ND40-13 Circumferential	ND	CN-2ND-40 CN-ISIN3-2561-1.0	NDE-600	UT Pipe to Tee	SS 40	14.000 0.438	Component	Depending on the examiners qualifications, Procedure PDI-UT-2 may be used in lieu of NDE-600. If PDI-UT-2 is used, Calibration Block PDI-UT-2-C may be used.

CATEGORY C-F-1, Pressure Retaining Welds In Austenitic SS Or High Alloy Piping

Piping Welds > 1/5 in. Nom Wall for Piping >= NPS 2 and <= NPS 4

ITEM NUMBER	ID NUMBER	SYS	ISO/DWG NUMBERS	PROC	INSP REQ	MAT/SCH	DIA/THK	CAL BLOCKS	COMMENTS
C05.011.191A	2ND40-13		CN-2ND-40	NDE-35	PT	SS	14.000		
	Circumferential	ND	CN-ISIN3-2561-1.0			40	0.438		
Class B					Pipe to Tee				
C05.011.192	2ND5-14		CN-2ND-5	NDE-600	UT	SS	14.000	Component	Depending on the examiners qualifications, Procedure PDI-UT-2 may be used in lieu of NDE-600. If PDI-UT-2 is used, Calibration Block PDI-UT-2-C may be used.
	Circumferential	ND	CN-ISIN3-2561-1.0			40	0.438		
Class B					Tee to Elbow				
C05.011.192A	2ND5-14		CN-2ND-5	NDE-35	PT	SS	14.000		
	Circumferential	ND	CN-ISIN3-2561-1.0			40	0.438		
Class B					Tee to Elbow				
C05.011.193	2ND40-15		CN-2ND-40	NDE-600	UT	SS	14.000	Component	Depending on the examiners qualifications, Procedure PDI-UT-2 may be used in lieu of NDE-600. If PDI-UT-2 is used, Calibration Block PDI-UT-2-C may be used.
	Circumferential	ND	CN-ISIN3-2561-1.0			40	0.438		
Class B					Tee to 14X12 Reducer				
C05.011.193A	2ND40-15		CN-2ND-40	NDE-35	PT	SS	14.000		
	Circumferential	ND	CN-ISIN3-2561-1.0			40	0.438		
Class B					Tee to 14X12 Reducer				
C05.011.194	2ND5-4		CN-2ND-5	NDE-600	UT	SS	14.000	Component	Depending on the examiners qualifications, Procedure PDI-UT-2 may be used in lieu of NDE-600. If PDI-UT-2 is used, Calibration Block PDI-UT-2-C may be used.
	Circumferential	ND	CN-ISIN3-2561-1.0			40	0.438		
Class B					Elbow to Flange				
C05.011.194A	2ND5-4		CN-2ND-5	NDE-35	PT	SS	14.000		
	Circumferential	ND	CN-ISIN3-2561-1.0			40	0.438		
Class B					Elbow to Flange				
C05.011.195	2ND3-2		CN-2ND-3	NDE-600	UT	SS	18.000	Component	Depending on the examiners qualifications, Procedure PDI-UT-2 may be used in lieu of NDE-600. If PDI-UT-2 is used, Calibration Block PDI-UT-2-C may be used.
	Circumferential	ND	CN-ISIN3-2561-1.0			40	0.562		
Class B					Pipe to Tee				
C05.011.195A	2ND3-2		CN-2ND-3	NDE-35	PT	SS	18.000		
	Circumferential	ND	CN-ISIN3-2561-1.0			40	0.562		
Class B					Pipe to Tee				

CATEGORY C-F-1, Pressure Retaining Welds In Austenitic SS Or High Alloy Piping

Piping Welds > 1/5 in. Nom Wall for Piping >= NPS 2 and <= NPS 4

ITEM NUMBER	ID NUMBER	SYS	ISO/DWG NUMBERS	PROC	INSP REQ	MAT/SCH	DIA/THK	CAL BLOCKS	COMMENTS
C05.011.196	2ND3-3		CN-2ND-3	NDE-600	UT	SS	18.000	Component	Depending on the examiners qualifications, Procedure PDI-UT-2 may be used in lieu of NDE-600. If PDI-UT-2 is used, Calibration Block PDI-UT-2-C may be used.
	Circumferential	ND	CN-ISIN3-2561-1.0			40	0.562		
Class B					Tee to 18X12 Reducer				
C05.011.196A	2ND3-3		CN-2ND-3	NDE-35	PT	SS	18.000		
	Circumferential	ND	CN-ISIN3-2561-1.0			40	0.562		
Class B					Tee to 18X12 Reducer				
C05.011.197	2ND3-4		CN-2ND-3	NDE-600	UT	SS	12.000	Component	Depending on the examiners qualifications, Procedure PDI-UT-2 may be used in lieu of NDE-600. If PDI-UT-2 is used, Calibration Block PDI-UT-2-C may be used.
	Circumferential	ND	CN-ISIN3-2561-1.0			STD	0.375		
Class B					Pipe to Elbow				
C05.011.197A	2ND3-4		CN-2ND-3	NDE-35	PT	SS	12.000		
	Circumferential	ND	CN-ISIN3-2561-1.0			STD	0.375		
Class B					Pipe to Elbow				
C05.011.198	2ND4-1		CN-2ND-4	NDE-600	UT	SS	14.000	Component	Depending on the examiners qualifications, Procedure PDI-UT-2 may be used in lieu of NDE-600. If PDI-UT-2 is used, Calibration Block PDI-UT-2-C may be used.
	Circumferential	ND	CN-ISIN3-2561-1.0			40	0.438		
Class B					18X14 Reducer to Pipe				
C05.011.198A	2ND4-1		CN-2ND-4	NDE-35	PT	SS	14.000		
	Circumferential	ND	CN-ISIN3-2561-1.0			40	0.438		
Class B					18X14 Reducer to Pipe				
C05.011.199	2ND4-3		CN-2ND-4	NDE-600	UT	SS	14.000	Component	Depending on the examiners qualifications, Procedure PDI-UT-2 may be used in lieu of NDE-600. If PDI-UT-2 is used, Calibration Block PDI-UT-2-C may be used.
	Circumferential	ND	CN-ISIN3-2561-1.0			40	0.438		
Class B					Elbow to Pipe				
C05.011.199A	2ND4-3		CN-2ND-4	NDE-35	PT	SS	14.000		
	Circumferential	ND	CN-ISIN3-2561-1.0			40	0.438		
Class B					Elbow to Pipe				
C05.011.200	2ND4-5		CN-2ND-4	NDE-600	UT	SS	14.000	Component	Depending on the examiners qualifications, Procedure PDI-UT-2 may be used in lieu of NDE-600. If PDI-UT-2 is used, Calibration Block PDI-UT-2-C may be used.
	Circumferential	ND	CN-ISIN3-2561-1.0			40	0.438		
Class B					Elbow to Pipe				

CATEGORY C-F-1, Pressure Retaining Welds In Austenitic SS Or High Alloy Piping

Piping Welds > 1/5 in. Nom Wall for Piping >= NPS 2 and <= NPS 4

ITEM NUMBER	ID NUMBER	SYS	ISO/DWG NUMBERS	PROC	INSP REQ	MAT/SCH	DIA/THK	CAL BLOCKS	COMMENTS
C05.011.200A	2ND4-5		CN-2ND-4	NDE-35	PT	SS	14.000		
	Circumferential	ND	CN-ISIN3-2561-1.0			40	0.438		
Class B					Elbow to Pipe				
C05.011.201	2ND4-9		CN-2ND-4	NDE-600	UT	SS	12.000	Component	Depending on the examiners qualifications, Procedure PDI-UT-2 may be used in lieu of NDE-600. If PDI-UT-2 is used, Calibration Block PDI-UT-2-C may be used.
	Circumferential	ND	CN-ISIN3-2561-1.0			STD	0.375		
Class B					14X12 Reducer to Elbow				
C05.011.201A	2ND4-9		CN-2ND-4	NDE-35	PT	SS	12.000		
	Circumferential	ND	CN-ISIN3-2561-1.0			STD	0.375		
Class B					14X12 Reducer to Elbow				
C05.011.301	2NI69-2		CN-2NI-69	NDE-600	UT	SS	6.000	Component	Depending on the examiners qualifications, Procedure PDI-UT-2 may be used in lieu of NDE-600. If PDI-UT-2 is used, Calibration Block PDI-UT-2-C may be used.
	Circumferential	NI	CN-ISIN3-2562-1.3			160	0.719		
Class B					Pipe to Elbow				
C05.011.301A	2NI69-2		CN-2NI-69	NDE-35	PT	SS	6.000		
	Circumferential	NI	CN-ISIN3-2562-1.3			160	0.719		
Class B					Pipe to Elbow				
C05.011.302	2NI69-5		CN-2NI-69	NDE-600	UT	SS	6.000	Component	Depending on the examiners qualifications, Procedure PDI-UT-2 may be used in lieu of NDE-600. If PDI-UT-2 is used, Calibration Block PDI-UT-2-C may be used.
	Circumferential	NI	CN-ISIN3-2562-1.3			160	0.719		
Class B					Elbow to Pipe				
C05.011.302A	2NI69-5		CN-2NI-69	NDE-35	PT	SS	6.000		
	Circumferential	NI	CN-ISIN3-2562-1.3			160	0.719		
Class B					Elbow to Pipe				
C05.011.303	2NI69-7		CN-2NI-69	NDE-600	UT	SS	6.000	Component	Depending on the examiners qualifications, Procedure PDI-UT-2 may be used in lieu of NDE-600. If PDI-UT-2 is used, Calibration Block PDI-UT-2-C may be used.
	Circumferential	NI	CN-ISIN3-2562-1.3			160	0.719		
Class B					Pipe to Flange				
C05.011.303A	2NI69-7		CN-2NI-69	NDE-35	PT	SS	6.000		
	Circumferential	NI	CN-ISIN3-2562-1.3			160	0.719		
Class B					Pipe to Flange				

DUKE ENERGY CORPORATION
INSERVICE INSPECTION PLAN MANAGEMENT
Inservice Inspection Database Management System

CATEGORY C-F-1, Pressure Retaining Welds In Austenitic SS Or High Alloy Piping

Piping Welds > 1/5 in. Nom Wall for Piping >= NPS 2 and <= NPS 4

Catawba 2
Inservice Inspection Plan for Interval 3 Outage 2

ITEM NUMBER	ID NUMBER	SYS	ISO/DWG NUMBERS	PROC	INSP REQ	MAT/SCH	DIA/THK	CAL BLOCKS	COMMENTS
C05.011.304	2NI69-8		CN-2NI-69	NDE-600	UT	SS	6.000	Component	Depending on the examiners qualifications, Procedure PDI-UT-2 may be used in lieu of NDE-600. If PDI-UT-2 is used, Calibration Block PDI-UT-2-C may be used.
	Circumferential	NI	CN-ISIN3-2562-1.3			160	0.719		
Class B					Flange to Pipe				
C05.011.304A	2NI69-8		CN-2NI-69	NDE-35	PT	SS	6.000		
	Circumferential	NI	CN-ISIN3-2562-1.3			160	0.719		
Class B					Flange to Pipe				
C05.011.322	2NI85-1		CN-2NI-85	NDE-600	UT	SS	6.000	Component	Depending on the examiners qualifications, Procedure PDI-UT-2 may be used in lieu of NDE-600. If PDI-UT-2 is used, Calibration Block PDI-UT-2-C may be used.
	Circumferential	NI	CN-ISIN3-2562-1.3			160	0.719		
Class B					Pipe to Elbow				
C05.011.322A	2NI85-1		CN-2NI-85	NDE-35	PT	SS	6.000		
	Circumferential	NI	CN-ISIN3-2562-1.3			160	0.719		
Class B					Pipe to Elbow				
C05.011.323	2NI85-10		CN-2NI-85	NDE-600	UT	SS	6.000	Component	Depending on the examiners qualifications, Procedure PDI-UT-2 may be used in lieu of NDE-600. If PDI-UT-2 is used, Calibration Block PDI-UT-2-C may be used.
	Circumferential	NI	CN-ISIN3-2562-1.3			160	0.719		
Class B					Pipe to Elbow				
C05.011.323A	2NI85-10		CN-2NI-85	NDE-35	PT	SS	6.000		
	Circumferential	NI	CN-ISIN3-2562-1.3			160	0.719		
Class B					Pipe to Elbow				
C05.011.324	2NI85-11		CN-2NI-85	NDE-600	UT	SS	6.000	Component	Depending on the examiners qualifications, Procedure PDI-UT-2 may be used in lieu of NDE-600. If PDI-UT-2 is used, Calibration Block PDI-UT-2-C may be used.
	Circumferential	NI	CN-ISIN3-2562-1.3			160	0.719		
Class B					Elbow to Pipe				
C05.011.324A	2NI85-11		CN-2NI-85	NDE-35	PT	SS	6.000		
	Circumferential	NI	CN-ISIN3-2562-1.3			160	0.719		
Class B					Elbow to Pipe				
C05.011.356	2NI90-7		CN-2NI-90	NDE-600	UT	SS	6.000	Component	Depending on the examiners qualifications, Procedure PDI-UT-2 may be used in lieu of NDE-600. If PDI-UT-2 is used, Calibration Block PDI-UT-2-C may be used.
	Circumferential	NI	CN-ISIN3-2562-1.3			160	0.719		
Class B					Pipe to Elbow				

CATEGORY C-F-1, Pressure Retaining Welds In Austenitic SS Or High Alloy Piping

Piping Welds > 1/5 in. Nom Wall for Piping >= NPS 2 and <= NPS 4

ITEM NUMBER	ID NUMBER	SYS	ISO/DWG NUMBERS	PROC	INSP REQ	MAT/SCH	DIA/THK	CAL BLOCKS	COMMENTS
C05.011.356A	2NI90-7		CN-2NI-90	NDE-35	PT	SS	6.000		
	Circumferential	NI	CN-ISIN3-2562-1.3			160	0.719		
Class B					Pipe to Elbow				
C05.011.357	2NI90-8		CN-2NI-90	NDE-600	UT	SS	6.000	Component	Depending on the examiners qualifications, Procedure PDI-UT-2 may be used in lieu of NDE-600. If PDI-UT-2 is used, Calibration Block PDI-UT-2-C may be used.
	Circumferential	NI	CN-ISIN3-2562-1.3			160	0.719		
Class B					Elbow to Pipe				
C05.011.357A	2NI90-8		CN-2NI-90	NDE-35	PT	SS	6.000		
	Circumferential	NI	CN-ISIN3-2562-1.3			160	0.719		
Class B					Elbow to Pipe				
C05.011.358	2NI90-11		CN-2NI-90	NDE-600	UT	SS	6.000	Component	Depending on the examiners qualifications, Procedure PDI-UT-2 may be used in lieu of NDE-600. If PDI-UT-2 is used, Calibration Block PDI-UT-2-C may be used.
	Circumferential	NI	CN-ISIN3-2562-1.3			160	0.719		
Class B					Pipe to Elbow				
C05.011.358A	2NI90-11		CN-2NI-90	NDE-35	PT	SS	6.000		
	Circumferential	NI	CN-ISIN3-2562-1.3			160	0.719		
Class B					Pipe to Elbow				
C05.011.359	2NI90-12		CN-2NI-90	NDE-600	UT	SS	6.000	Component	Depending on the examiners qualifications, Procedure PDI-UT-2 may be used in lieu of NDE-600. If PDI-UT-2 is used, Calibration Block PDI-UT-2-C may be used.
	Circumferential	NI	CN-ISIN3-2562-1.3			160	0.719		
Class B					Elbow to Pipe				
C05.011.359A	2NI90-12		CN-2NI-90	NDE-35	PT	SS	6.000		
	Circumferential	NI	CN-ISIN3-2562-1.3			160	0.719		
Class B					Elbow to Pipe				
C05.011.401	2NS32-1		CN-2NS-32	NDE-600	UT	SS	12.000	Component	Depending on the examiners qualifications, Procedure PDI-UT-2 may be used in lieu of NDE-600. If PDI-UT-2 is used, Calibration Block PDI-UT-2-C may be used.
	Circumferential	NS	CN-ISIN3-2563-1.0			STD	0.375		
Class B					Valve 2NS001B to Pipe				
C05.011.401A	2NS32-1		CN-2NS-32	NDE-35	PT	SS	12.000		
	Circumferential	NS	CN-ISIN3-2563-1.0			STD	0.375		
Class B					Valve 2NS001B to Pipe				

DUKE ENERGY CORPORATION
INSERVICE INSPECTION PLAN MANAGEMENT
Inservice Inspection Database Management System
Catawba 2
Inservice Inspection Plan for Interval 3 Outage 2

CATEGORY C-F-1, Pressure Retaining Welds In Austenitic SS Or High Alloy Piping

Piping Welds > 1/5 in. Nom Wall for Piping >= NPS 2 and <= NPS 4

ITEM NUMBER	ID NUMBER	SYS	ISO/DWG NUMBERS	PROC	INSP REQ	MAT/SCH	DIA/THK	CAL BLOCKS	COMMENTS

Total C05.011 Items: 62

CATEGORY C-F-1, Pressure Retaining Welds In Austenitic SS Or High Alloy Piping

Socket Welds

ITEM NUMBER	ID NUMBER	SYS	ISO/DWG NUMBERS	PROC	INSP REQ	MAT/SCH	DIA/THK	CAL BLOCKS	COMMENTS
C05.021.001 Class B	2CA112-57 Circumferential	CA	CN-2CA-112 CN-ISIN3-2592-1.1	NDE-600	UT Elbow to Pipe	SS 80	4.000 0.337	Component	Depending on the examiners qualifications, Procedure PDI-UT-2 may be used in lieu of NDE-600. If PDI-UT-2 is used, Calibration Block PDI-UT-2-C may be used.
C05.021.001A Class B	2CA112-57 Circumferential	CA	CN-2CA-112 CN-ISIN3-2592-1.1	NDE-35	PT Elbow to Pipe	SS 80	4.000 0.337		
C05.021.101 Class B	2NI100-15 Circumferential	NI	CN-2NI-100 CN-ISIN3-2562-1.2	NDE-600	UT Elbow to Pipe	SS 80	4.000 0.337	Component	Depending on the examiners qualifications, Procedure PDI-UT-2 may be used in lieu of NDE-600. If PDI-UT-2 is used, Calibration Block PDI-UT-2-C may be used.
C05.021.101A Class B	2NI100-15 Circumferential	NI	CN-2NI-100 CN-ISIN3-2562-1.2	NDE-35	PT Elbow to Pipe	SS 80	4.000 0.337		
C05.021.102 Class B	2NI100-16 Circumferential	NI	CN-2NI-100 CN-ISIN3-2562-1.2	NDE-600	UT Pipe to Elbow	SS 80	4.000 0.337	Component	Depending on the examiners qualifications, Procedure PDI-UT-2 may be used in lieu of NDE-600. If PDI-UT-2 is used, Calibration Block PDI-UT-2-C may be used.
C05.021.102A Class B	2NI100-16 Circumferential	NI	CN-2NI-100 CN-ISIN3-2562-1.2	NDE-35	PT Pipe to Elbow	SS 80	4.000 0.337		
C05.021.103 Class B	2NI100-7 Circumferential	NI	CN-2NI-100 CN-ISIN3-2562-1.2	NDE-600	UT Pipe to Elbow	SS 80	4.000 0.337	Component	Depending on the examiners qualifications, Procedure PDI-UT-2 may be used in lieu of NDE-600. If PDI-UT-2 is used, Calibration Block PDI-UT-2-C may be used.
C05.021.103A Class B	2NI100-7 Circumferential	NI	CN-2NI-100 CN-ISIN3-2562-1.2	NDE-35	PT Pipe to Elbow	SS 80	4.000 0.337		

CATEGORY C-F-1, Pressure Retaining Welds In Austenitic SS Or High Alloy Piping

Socket Welds

ITEM NUMBER	ID NUMBER	SYS	ISO/DWG NUMBERS	PROC	INSP REQ	MAT/SCH	DIA/THK	CAL BLOCKS	COMMENTS
C05.021.104	2NI100-8		CN-2NI-100	NDE-600	UT	SS	4.000	Component	Depending on the examiners qualifications, Procedure PDI-UT-2 may be used in lieu of NDE-600. If PDI-UT-2 is used, Calibration Block PDI-UT-2-C may be used.
	Circumferential	NI	CN-ISIN3-2562-1.2			80	0.337		
Class B					Elbow to Pipe				
C05.021.104A	2NI100-8		CN-2NI-100	NDE-35	PT	SS	4.000		
	Circumferential	NI	CN-ISIN3-2562-1.2			80	0.337		
Class B					Elbow to Pipe				
C05.021.105	2NI106-1		CN-2NI-106	NDE-600	UT	SS	3.000	Component	Depending on the examiners qualifications, Procedure PDI-UT-2 may be used in lieu of NDE-600. If PDI-UT-2 is used, Calibration Block PDI-UT-2-C may be used.
	Circumferential	NI	CN-ISIN3-2562-1.0			160	0.438		
Class B					Pipe to Elbow				
C05.021.105A	2NI106-1		CN-2NI-106	NDE-35	PT	SS	3.000		
	Circumferential	NI	CN-ISIN3-2562-1.0			160	0.438		
Class B					Pipe to Elbow				
C05.021.106	2NI106-10		CN-2NI-106	NDE-600	UT	SS	3.000	Component	Depending on the examiners qualifications, Procedure PDI-UT-2 may be used in lieu of NDE-600. If PDI-UT-2 is used, Calibration Block PDI-UT-2-C may be used.
	Circumferential	NI	CN-ISIN3-2562-1.0			160	0.438		
Class B					Elbow to Pipe				
C05.021.106A	2NI106-10		CN-2NI-106	NDE-35	PT	SS	3.000		
	Circumferential	NI	CN-ISIN3-2562-1.0			160	0.438		
Class B					Elbow to Pipe				
C05.021.107	2NI106-5		CN-2NI-106	NDE-600	UT	SS	3.000	Component	Depending on the examiners qualifications, Procedure PDI-UT-2 may be used in lieu of NDE-600. If PDI-UT-2 is used, Calibration Block PDI-UT-2-C may be used.
	Circumferential	NI	CN-ISIN3-2562-1.0			160	0.438		
Class B					Pipe to Elbow				
C05.021.107A	2NI106-5		CN-2NI-106	NDE-35	PT	SS	3.000		
	Circumferential	NI	CN-ISIN3-2562-1.0			160	0.438		
Class B					Pipe to Elbow				
C05.021.108	2NI106-6		CN-2NI-106	NDE-600	UT	SS	3.000	Component	Depending on the examiners qualifications, Procedure PDI-UT-2 may be used in lieu of NDE-600. If PDI-UT-2 is used, Calibration Block PDI-UT-2-C may be used.
	Circumferential	NI	CN-ISIN3-2562-1.0			160	0.438		
Class B					Elbow to Pipe				

CATEGORY C-F-1, Pressure Retaining Welds In Austenitic SS Or High Alloy Piping

Socket Welds

ITEM NUMBER	ID NUMBER	SYS	ISO/DWG NUMBERS	PROC	INSP REQ	MAT/SCH	DIA/THK	CAL BLOCKS	COMMENTS
C05.021.108A	2NI106-6		CN-2NI-106	NDE-35	PT	SS	3.000		
	Circumferential	NI	CN-ISIN3-2562-1.0			160	0.438		
Class B					Elbow to Pipe				
C05.021.109	2NI114-1		CN-2NI-114	NDE-600	UT	SS	3.000	Component	Depending on the examiners qualifications, Procedure PDI-UT-2 may be used in lieu of NDE-600. If PDI-UT-2 is used, Calibration Block PDI-UT-2-C may be used.
	Circumferential	NI	CN-ISIN3-2562-1.0			160	0.438		
Class B					Elbow to Pipe				
C05.021.109A	2NI114-1		CN-2NI-114	NDE-35	PT	SS	3.000		
	Circumferential	NI	CN-ISIN3-2562-1.0			160	0.438		
Class B					Elbow to Pipe				
C05.021.110	2NI114-10		CN-2NI-114	NDE-600	UT	SS	3.000	Component	Depending on the examiners qualifications, Procedure PDI-UT-2 may be used in lieu of NDE-600. If PDI-UT-2 is used, Calibration Block PDI-UT-2-C may be used.
	Circumferential	NI	CN-ISIN3-2562-1.0			160	0.438		
Class B					Pipe to Elbow				
C05.021.110A	2NI114-10		CN-2NI-114	NDE-35	PT	SS	3.000		
	Circumferential	NI	CN-ISIN3-2562-1.0			160	0.438		
Class B					Pipe to Elbow				
C05.021.211	2NV126-1		CN-2NV-126	NDE-600	UT	SS	3.000	Component	Depending on the examiners qualifications, Procedure PDI-UT-2 may be used in lieu of NDE-600. If PDI-UT-2 is used, Calibration Block PDI-UT-2-C may be used.
	Circumferential	NV	CN-ISIN3-2554-1.1			40	0.216		
Class B					Elbow to Pipe				
C05.021.211A	2NV126-1		CN-2NV-126	NDE-35	PT	SS	3.000		
	Circumferential	NV	CN-ISIN3-2554-1.1			40	0.216		
Class B					Elbow to Pipe				
C05.021.212	2NV126-2		CN-2NV-126	NDE-600	UT	SS	3.000	Component	Depending on the examiners qualifications, Procedure PDI-UT-2 may be used in lieu of NDE-600. If PDI-UT-2 is used, Calibration Block PDI-UT-2-C may be used.
	Circumferential	NV	CN-ISIN3-2554-1.1			40	0.216		
Class B					Pipe to Elbow				
C05.021.212A	2NV126-2		CN-2NV-126	NDE-35	PT	SS	3.000		
	Circumferential	NV	CN-ISIN3-2554-1.1			40	0.216		
Class B					Pipe to Elbow				

CATEGORY C-F-1, Pressure Retaining Welds In Austenitic SS Or High Alloy Piping

Socket Welds

ITEM NUMBER	ID NUMBER	SYS	ISO/DWG NUMBERS	PROC	INSP REQ	MAT/SCH	DIA/THK	CAL BLOCKS	COMMENTS
C05.021.213	2NV126-4		CN-2NV-126	NDE-600	UT	SS	3.000	Component	Depending on the examiners qualifications, Procedure PDI-UT-2 may be used in lieu of NDE-600. If PDI-UT-2 is used, Calibration Block PDI-UT-2-C may be used.
	Circumferential	NV	CN-ISIN3-2554-1.1			40	0.216		
Class B					Elbow to Pipe				
C05.021.213A	2NV126-4		CN-2NV-126	NDE-35	PT	SS	3.000		
	Circumferential	NV	CN-ISIN3-2554-1.1			40	0.216		
Class B					Elbow to Pipe				
C05.021.214	2NV126-3		CN-2NV-126	NDE-600	UT	SS	3.000	Component	Depending on the examiners qualifications, Procedure PDI-UT-2 may be used in lieu of NDE-600. If PDI-UT-2 is used, Calibration Block PDI-UT-2-C may be used.
	Circumferential	NV	CN-ISIN3-2554-1.1			40	0.216		
Class B					Elbow to Elbow				
C05.021.214A	2NV126-3		CN-2NV-126	NDE-35	PT	SS	3.000		
	Circumferential	NV	CN-ISIN3-2554-1.1			40	0.216		
Class B					Elbow to Elbow				
C05.021.215	2NV13-1		CN-2NV-13	NDE-600	UT	SS	3.000	Component	Depending on the examiners qualifications, Procedure PDI-UT-2 may be used in lieu of NDE-600. If PDI-UT-2 is used, Calibration Block PDI-UT-2-C may be used.
	Circumferential	NV	CN-ISIN3-2554-1.7			160	0.438		
Class B					Tee to Pipe				
C05.021.215A	2NV13-1		CN-2NV-13	NDE-35	PT	SS	3.000		
	Circumferential	NV	CN-ISIN3-2554-1.7			160	0.438		
Class B					Tee to Pipe				
C05.021.216	2NV14-14		CN-2NV-14	NDE-600	UT	SS	3.000	Component	Depending on the examiners qualifications, Procedure PDI-UT-2 may be used in lieu of NDE-600. If PDI-UT-2 is used, Calibration Block PDI-UT-2-C may be used.
	Circumferential	NV	CN-ISIN3-2554-1.7			160	0.438		
Class B					Elbow to Pipe				
C05.021.216A	2NV14-14		CN-2NV-14	NDE-35	PT	SS	3.000		
	Circumferential	NV	CN-ISIN3-2554-1.7			160	0.438		
Class B					Elbow to Pipe				
C05.021.217	2NV14-1		CN-2NV-14	NDE-600	UT	SS	4.000	Component	Depending on the examiners qualifications, Procedure PDI-UT-2 may be used in lieu of NDE-600. If PDI-UT-2 is used, Calibration Block PDI-UT-2-C may be used.
	Circumferential	NV	CN-ISIN3-2554-1.7			160	0.531		
Class B					Elbow to Pipe				

CATEGORY C-F-1, Pressure Retaining Welds In Austenitic SS Or High Alloy Piping

Socket Welds

ITEM NUMBER	ID NUMBER	SYS	ISO/DWG NUMBERS	PROC	INSP REQ	MAT/SCH	DIA/THK	CAL BLOCKS	COMMENTS
C05.021.217A	2NV14-1		CN-2NV-14	NDE-35	PT	SS	4.000		
	Circumferential	NV	CN-ISIN3-2554-1.7			160	0.531		
Class B					Elbow to Pipe				
C05.021.218	2NV14-10		CN-2NV-14	NDE-600	UT	SS	3.000	Component	Depending on the examiners qualifications, Procedure PDI-UT-2 may be used in lieu of NDE-600. If PDI-UT-2 is used, Calibration Block PDI-UT-2-C may be used.
	Circumferential	NV	CN-ISIN3-2554-1.7			160	0.438		
Class B					Elbow to Pipe				
C05.021.218A	2NV14-10		CN-2NV-14	NDE-35	PT	SS	3.000		
	Circumferential	NV	CN-ISIN3-2554-1.7			160	0.438		
Class B					Elbow to Pipe				
C05.021.219	2NV14-2		CN-2NV-14	NDE-600	UT	SS	4.000	Component	Depending on the examiners qualifications, Procedure PDI-UT-2 may be used in lieu of NDE-600. If PDI-UT-2 is used, Calibration Block PDI-UT-2-C may be used.
	Circumferential	NV	CN-ISIN3-2554-1.7			160	0.531		
Class B					Pipe to Tee				
C05.021.219A	2NV14-2		CN-2NV-14	NDE-35	PT	SS	4.000		
	Circumferential	NV	CN-ISIN3-2554-1.7			160	0.531		
Class B					Pipe to Tee				
C05.021.220	2NV14-3		CN-2NV-14	NDE-600	UT	SS	4.000	Component	Depending on the examiners qualifications, Procedure PDI-UT-2 may be used in lieu of NDE-600. If PDI-UT-2 is used, Calibration Block PDI-UT-2-C may be used.
	Circumferential	NV	CN-ISIN3-2554-1.7			160	0.531		
Class B					Tee to 4X3 Reducer				
C05.021.220A	2NV14-3		CN-2NV-14	NDE-35	PT	SS	4.000		
	Circumferential	NV	CN-ISIN3-2554-1.7			160	0.531		
Class B					Tee to 4X3 Reducer				
C05.021.221	2NV14-4		CN-2NV-14	NDE-600	UT	SS	3.000	Component	Depending on the examiners qualifications, Procedure PDI-UT-2 may be used in lieu of NDE-600. If PDI-UT-2 is used, Calibration Block PDI-UT-2-C may be used.
	Circumferential	NV	CN-ISIN3-2554-1.7			160	0.438		
Class B					4X3 Reducer to Elbow				
C05.021.221A	2NV14-4		CN-2NV-14	NDE-35	PT	SS	3.000		
	Circumferential	NV	CN-ISIN3-2554-1.7			160	0.438		
Class B					4X3 Reducer to Elbow				

CATEGORY C-F-1, Pressure Retaining Welds In Austenitic SS Or High Alloy Piping

Socket Welds

ITEM NUMBER	ID NUMBER	SYS	ISO/DWG NUMBERS	PROC	INSP REQ	MAT/SCH	DIA/THK	CAL BLOCKS	COMMENTS
C05.021.222	2NV14-7		CN-2NV-14	NDE-600	UT	SS	3.000	Component	Depending on the examiners qualifications, Procedure PDI-UT-2 may be used in lieu of NDE-600. If PDI-UT-2 is used, Calibration Block PDI-UT-2-C may be used.
	Circumferential	NV	CN-ISIN3-2554-1.7			160	0.438		
Class B					Pipe to Elbow				
C05.021.222A	2NV14-7		CN-2NV-14	NDE-35	PT	SS	3.000		
	Circumferential	NV	CN-ISIN3-2554-1.7			160	0.438		
Class B					Pipe to Elbow				
C05.021.223	2NV15-1		CN-2NV-15	NDE-600	UT	SS	4.000	Component	Depending on the examiners qualifications, Procedure PDI-UT-2 may be used in lieu of NDE-600. If PDI-UT-2 is used, Calibration Block PDI-UT-2-C may be used.
	Circumferential	NV	CN-ISIN3-2554-1.7			160	0.531		
Class B					Tee to Pipe				
C05.021.223A	2NV15-1		CN-2NV-15	NDE-35	PT	SS	4.000		
	Circumferential	NV	CN-ISIN3-2554-1.7			160	0.531		
Class B					Tee to Pipe				
C05.021.224	2NV15-8		CN-2NV-15	NDE-600	UT	SS	4.000	Component	Depending on the examiners qualifications, Procedure PDI-UT-2 may be used in lieu of NDE-600. If PDI-UT-2 is used, Calibration Block PDI-UT-2-C may be used.
	Circumferential	NV	CN-ISIN3-2554-1.7			160	0.531		
Class B					Pipe to Elbow				
C05.021.224A	2NV15-8		CN-2NV-15	NDE-35	PT	SS	4.000		
	Circumferential	NV	CN-ISIN3-2554-1.7			160	0.531		
Class B					Pipe to Elbow				
C05.021.225	2NV15-3		CN-2NV-15	NDE-600	UT	SS	4.000	Component	Depending on the examiners qualifications, Procedure PDI-UT-2 may be used in lieu of NDE-600. If PDI-UT-2 is used, Calibration Block PDI-UT-2-C may be used.
	Circumferential	NV	CN-ISIN3-2554-1.7			160	0.531		
Class B					Elbow to Pipe				
C05.021.225A	2NV15-3		CN-2NV-15	NDE-35	PT	SS	4.000		
	Circumferential	NV	CN-ISIN3-2554-1.7			160	0.531		
Class B					Elbow to Pipe				

Total C05.021 Items: 52

DUKE ENERGY CORPORATION
INSERVICE INSPECTION PLAN MANAGEMENT
Inservice Inspection Database Management System
Catawba 2
Inservice Inspection Plan for Interval 3 Outage 2

CATEGORY C-F-1, Pressure Retaining Welds In Austenitic SS Or High Alloy Piping

Pipe Branch Connections of Branch Piping >= NPS 2

ITEM NUMBER	ID NUMBER	SYS	ISO/DWG NUMBERS	PROC	INSP REQ	MAT/SCH	DIA/THK	CAL BLOCKS	COMMENTS
C05.030.001	2CA53-10		CN-2CA-53	NDE-35	PT	SS-CS	2.000		
	Circumferential	CA	CN-ISIN3-2592-1.1			80	0.218		
Class B					Pipe to Valve 2CA190				
C05.030.021	2NI200-10		CN-2NI-200	NDE-35	PT	SS	2.000		
	Socket	NI	CN-ISIN3-2562-1.2			80	0.218		
Class B					Pipe to Elbow				
C05.030.022	2NI200-13		CN-2NI-200	NDE-35	PT	SS	2.000		
	Socket	NI	CN-ISIN3-2562-1.2			80	0.218		
Class B					Valve 2NI114 to Pipe				
C05.030.023	2NI200-19		CN-2NI-200	NDE-35	PT	SS	2.000		
	Socket	NI	CN-ISIN3-2562-1.2			80	0.218		
Class B					Valve 2NI115A to Pipe				
C05.030.024	2NI255-10		CN-2NI-255	NDE-35	PT	SS	2.000		
	Socket	NI	CN-ISIN3-2562-1.2			80	0.218		
Class B					Pipe to Elbow				
C05.030.025	2NI255-12		CN-2NI-255	NDE-35	PT	SS	2.000		
	Socket	NI	CN-ISIN3-2562-1.2			80	0.218		
Class B					Pipe to Valve 2NI143				
C05.030.105	2NV192-3		CN-2NV-192	NDE-35	PT	SS	2.000		
	Socket	NV	CN-ISIN3-2554-1.5			160	0.344		
Class B					Pipe to Tee				
C05.030.106	2NV192-4		CN-2NV-192	NDE-35	PT	SS	2.000		
	Socket	NV	CN-ISIN3-2554-1.5			160	0.344		
Class B					Tee to Pipe				

CATEGORY C-F-1, Pressure Retaining Welds In Austenitic SS Or High Alloy Piping

Pipe Branch Connections of Branch Piping >= NPS 2

ITEM NUMBER	ID NUMBER	SYS	ISO/DWG NUMBERS	PROC	INSP REQ	MAT/SCH	DIA/THK	CAL BLOCKS	COMMENTS
C05.030.107	2NV192-5		CN-2NV-192	NDE-35	PT	SS	2.000		
	Socket	NV	CN-ISIN3-2554-1.5			160	0.344		
Class B					Pipe to Valve 2NV057				

Total C05.030 Items: 9

CATEGORY C-F-2, Pressure Retaining Welds In Carbon Or Low Alloy Steel Piping

Piping Welds > 1/5 in. Nom Wall for Piping >= NPS 2 and <= NPS 4

ITEM NUMBER	ID NUMBER	SYS	ISO/DWG NUMBERS	PROC	INSP REQ	MAT/SCH	DIA/THK	CAL BLOCKS	COMMENTS
C05.051.003 Class B	2CA60-11 Circumferential	CA	CN-2CA-60 CN-ISIN3-2592-1.1	NDE-600	UT Elbow to Pipe	CS 80	6.000 0.432	Component	Depending on the examiners qualifications, Procedure PDI-UT-1 may be used in lieu of NDE-600. If PDI-UT-1 is used, Calibration Block PDI-UT-1-C may be used.
C05.051.003A Class B	2CA60-11 Circumferential	CA	CN-2CA-60 CN-ISIN3-2592-1.1	NDE-25	MT Elbow to Pipe	CS 80	6.000 0.432		
C05.051.004 Class B	2CA60-7 Circumferential	CA	CN-2CA-60 CN-ISIN3-2592-1.1	NDE-600	UT Elbow to Pipe	CS 80	6.000 0.432	Component	Depending on the examiners qualifications, Procedure PDI-UT-1 may be used in lieu of NDE-600. If PDI-UT-1 is used, Calibration Block PDI-UT-1-C may be used.
C05.051.004A Class B	2CA60-7 Circumferential	CA	CN-2CA-60 CN-ISIN3-2592-1.1	NDE-25	MT Elbow to Pipe	CS 80	6.000 0.432		
C05.051.006 Class B	2CA67-3 Circumferential	CA	CN-2CA-67 CN-ISIN3-2592-1.1	NDE-600	UT Elbow to Pipe	CS 80	6.000 0.432	Component	Depending on the examiners qualifications, Procedure PDI-UT-1 may be used in lieu of NDE-600. If PDI-UT-1 is used, Calibration Block PDI-UT-1-C may be used.
C05.051.006A Class B	2CA67-3 Circumferential	CA	CN-2CA-67 CN-ISIN3-2592-1.1	NDE-25	MT Elbow to Pipe	CS 80	6.000 0.432		
C05.051.007 Class B	2CA67-5 Circumferential	CA	CN-2CA-67 CN-ISIN3-2592-1.1	NDE-600	UT Pipe to Elbow	CS 80	6.000 0.432	Component	Depending on the examiners qualifications, Procedure PDI-UT-1 may be used in lieu of NDE-600. If PDI-UT-1 is used, Calibration Block PDI-UT-1-C may be used.
C05.051.007A Class B	2CA67-5 Circumferential	CA	CN-2CA-67 CN-ISIN3-2592-1.1	NDE-25	MT Pipe to Elbow	CS 80	6.000 0.432		

CATEGORY C-F-2, Pressure Retaining Welds In Carbon Or Low Alloy Steel Piping

Piping Welds > 1/5 in. Nom Wall for Piping >= NPS 2 and <= NPS 4

ITEM NUMBER	ID NUMBER	SYS	ISO/DWG NUMBERS	PROC	INSP REQ	MAT/SCH	DIA/THK	CAL BLOCKS	COMMENTS
C05.051.052 Class B	2CF57-4 Circumferential	CF	CN-2CF-57 CN-ISIN3-2591-1.1	NDE-600	UT Pipe to Valve 2CF51	CS 80	18.000 0.938	Component	Depending on the examiners qualifications, Procedure PDI-UT-1 may be used in lieu of NDE-600. If PDI-UT-1 is used, Calibration Block PDI-UT-1-C may be used.
C05.051.052A Class B	2CF57-4 Circumferential	CF	CN-2CF-57 CN-ISIN3-2591-1.1	NDE-25	MT Pipe to Valve 2CF51	CS 80	18.000 0.938		
C05.051.053 Class B	2CF64-28 Circumferential Term end	CF	CN-2CF-64 CN-ISIN3-2591-1.1	NDE-600	UT Elbow to Nozzle	CS 80	16.000 0.844	Component	Steam Generator 2A. Depending on the examiners qualifications, Procedure PDI-UT-1 may be used in lieu of NDE-600. If PDI-UT-1 is used, Calibration Block PDI-UT-1-C may be used.
C05.051.053A Class B	2CF64-28 Circumferential Term end	CF	CN-2CF-64 CN-ISIN3-2591-1.1	NDE-25	MT Elbow to Nozzle	CS 80	16.000 0.844		Steam Generator 2A.
C05.051.054 Class B	2CF64-35 Circumferential	CF	CN-2CF-64 CN-ISIN3-2591-1.1	NDE-600	UT Pipe to Elbow	CS 80	16.000 0.844	Component	Depending on the examiners qualifications, Procedure PDI-UT-1 may be used in lieu of NDE-600. If PDI-UT-1 is used, Calibration Block PDI-UT-1-C may be used.
C05.051.054A Class B	2CF64-35 Circumferential	CF	CN-2CF-64 CN-ISIN3-2591-1.1	NDE-25	MT Pipe to Elbow	CS 80	16.000 0.844		
C05.051.101 Class B	2SM11-2 Circumferential	SM	CN-2SM-11 CN-ISIN3-2593-1.0	NDE-600	UT Pipe to Elbow	CS	34.000 1.375	Component	Depending on the examiners qualifications, Procedure PDI-UT-1 may be used in lieu of NDE-600. If PDI-UT-1 is used, Calibration Block PDI-UT-1-C may be used.
C05.051.101A Class B	2SM11-2 Circumferential	SM	CN-2SM-11 CN-ISIN3-2593-1.0	NDE-25	MT Pipe to Elbow	CS	34.000 1.375		
C05.051.102 Class B	2SM11-3 Circumferential	SM	CN-2SM-11 CN-ISIN3-2593-1.0	NDE-600	UT Elbow to Pipe	CS	34.000 1.375	Component	Depending on the examiners qualifications, Procedure PDI-UT-1 may be used in lieu of NDE-600. If PDI-UT-1 is used, Calibration Block PDI-UT-1-C may be used.

CATEGORY C-F-2, Pressure Retaining Welds In Carbon Or Low Alloy Steel Piping

Piping Welds > 1/5 in. Nom Wall for Piping >= NPS 2 and <= NPS 4

ITEM NUMBER	ID NUMBER	SYS	ISO/DWG NUMBERS	PROC	INSP REQ	MAT/SCH	DIA/THK	CAL BLOCKS	COMMENTS
C05.051.102A	2SM11-3		CN-2SM-11	NDE-25	MT	CS	34.000		
	Circumferential	SM	CN-ISIN3-2593-1.0				1.375		
Class B					Elbow to Pipe				
C05.051.151	2SV10-4		CN-2SV-10	NDE-600	UT	CS	9.000	Component	Depending on the examiners qualifications, Procedure PDI-UT-1 may be used in lieu of NDE-600. If PDI-UT-1 is used, Calibration Block PDI-UT-1-C may be used.
	Circumferential	SV	CN-ISIN3-2593-1.0			40	1.500		
Class B					Pipe to Valve 2SV017				
C05.051.151A	2SV10-4		CN-2SV-10	NDE-25	MT	CS	9.000		
	Circumferential	SV	CN-ISIN3-2593-1.0			40	1.500		
Class B					Pipe to Valve 2SV017				

Total C05.051 Items: 20

CATEGORY C-F-2, Pressure Retaining Welds In Carbon Or Low Alloy Steel Piping

Socket Welds

ITEM NUMBER	ID NUMBER	SYS	ISO/DWG NUMBERS	PROC	INSP REQ	MAT/SCH	DIA/THK	CAL BLOCKS	COMMENTS
C05.061.001 Class B	2CA102-2 Circumferential	CA	CN-2CA-102 CN-ISIN3-2592-1.1	NDE-600	UT Pipe to Valve 2CA046B	CS 160	4.000 0.531	Component	Depending on the examiners qualifications, Procedure PDI-UT-1 may be used in lieu of NDE-600. If PDI-UT-1 is used, Calibration Block PDI-UT-1-C may be used.
C05.061.001A Class B	2CA102-2 Circumferential	CA	CN-2CA-102 CN-ISIN3-2592-1.1	NDE-25	MT Pipe to Valve 2CA046B	CS 160	4.000 0.531		
C05.061.002 Class B	2CA103-2 Circumferential	CA	CN-2CA-103 CN-ISIN3-2592-1.1	NDE-600	UT Pipe to Tee	CS 160	4.000 0.531	Component	Depending on the examiners qualifications, Procedure PDI-UT-1 may be used in lieu of NDE-600. If PDI-UT-1 is used, Calibration Block PDI-UT-1-C may be used.
C05.061.002A Class B	2CA103-2 Circumferential	CA	CN-2CA-103 CN-ISIN3-2592-1.1	NDE-25	MT Pipe to Tee	CS 160	4.000 0.531		Depending on the examiners qualifications, Procedure PDI-UT-1 may be used in lieu of NDE-600. If PDI-UT-1 is used, Calibration Block PDI-UT-1-C may be used.
C05.061.003 Class B	2CA103-3 Circumferential	CA	CN-2CA-103 CN-ISIN3-2592-1.1	NDE-600	UT Tee to Flange	CS 160	4.000 0.531	Component	Depending on the examiners qualifications, Procedure PDI-UT-1 may be used in lieu of NDE-600. If PDI-UT-1 is used, Calibration Block PDI-UT-1-C may be used.
C05.061.003A Class B	2CA103-3 Circumferential	CA	CN-2CA-103 CN-ISIN3-2592-1.1	NDE-25	MT Tee to Flange	CS 160	4.000 0.531		

Total C05.061 Items: 6

CATEGORY C-F-2, Pressure Retaining Welds In Carbon Or Low Alloy Steel Piping

Pipe Branch Connections of Branch Piping >= NPS 2

ITEM NUMBER	ID NUMBER	SYS	ISO/DWG NUMBERS	PROC	INSP REQ	MAT/SCH	DIA/THK	CAL BLOCKS	COMMENTS
C05.070.006	2CA154-16		CN-2CA-154	NDE-25	MT	CS	2.000		
	Circumferential	CA	CN-ISIN3-2592-1.1			80	0.218		
Class B					Pipe to Elbow				
C05.070.007	2CA154-17		CN-2CA-154	NDE-25	MT	CS	2.000		
	Circumferential	CA	CN-ISIN3-2592-1.1			80	0.218		
Class B					Elbow to Pipe				
C05.070.009	2CA69-22		CN-2CA-69	NDE-25	MT	CS	2.000		
	Circumferential	CA	CN-ISIN3-2592-1.1			80	0.218		
Class B					Valve 2CA188 to Pipe				
C05.070.010	2CA69-23		CN-2CA-69	NDE-25	MT	CS	2.000		
	Circumferential	CA	CN-ISIN3-2592-1.1			80	0.218		
Class B					Valve 2CA185 to Pipe				

Total C05.070 Items: 4

Total C05 Items: 153

CATEGORY C-G, Pressure Retaining Welds In Pumps And Valves

Pressure Vessels

ITEM NUMBER	ID NUMBER	SYS	ISO/DWG NUMBERS	PROC	INSP REQ	MAT/SCH	DIA/THK	CAL BLOCKS	COMMENTS
****** Welded Attachments ******									
C06.020.002	2ND-28A		CNM 1205.00-207	NDE-35	PT	SS	8.000		Valve Body Weld.
	Circumferential	ND	CN-ISIN3-2561-1.0				1.750		
Class B					Valve Body to Bonnet				
C06.020.003	2ND-33		CNM 1205.00-1937	NDE-35	PT	SS	8.000		Valve Body Weld.
	Circumferential	ND	CN-ISIN3-2561-1.0				1.750		
Class B					Valve Body to Bonnet				
C06.020.009	2NI-136B		CNM 1205.00-207	NDE-35	PT	SS	8.000		Valve Body Weld.
	Circumferential	NI	CN-ISIN3-2562-1.2				1.750		
Class B					Valve Body to Bonnet				
C06.020.010	2NI-342		CNM 1205.00-152	NDE-35	PT	SS	8.000		Valve Body Weld.
	Circumferential	NI	CN-ISIN3-2562-1.2				0.417		
Class B					Valve Body to Bonnet				
C06.020.011	2NI-162A		CNM-1205.00-88	NDE-35	PT	SS	4.000		Valve Body Weld.
	Circumferential	NI	CN-ISIN3-2562-1.3				0.867		
Class B					Valve Body to Bonnet				
C06.020.013	2NV-91B		CNM-1205.00-165	NDE-35	PT	SS	4.000		Valve Body Weld.
	Circumferential	NV	CN-ISIN3-2554-1.0				0.237		
Class B					Valve Body to Bonnet				

Total C06.020 Items: 6

Total C06 Items: 6

CATEGORY D-A, Welded Attachments For Vessels, Piping, Pumps, And Valves

Pumps

ITEM NUMBER	ID NUMBER	SYS	ISO/DWG NUMBERS	PROC	INSP REQ	MAT/SCH	DIA/THK	CAL BLOCKS	COMMENTS
****** Welded Attachments ******									
D01.020.061	2-R-YC-0006		CN-2525-YC001	QAL-13	VT-1	NA	8.000		Inspect with F01.031.252.
	Rigid Restraint	YC	CN-ISIN3-1578-2.2				0.500		
Class C									

Total D01.020 Items: 1

Total D01 Items: 1

CATEGORY F-A, Supports

Class 1 Piping Supports

ITEM NUMBER	ID NUMBER	SYS	ISO/DWG NUMBERS	PROC	INSP REQ	MAT/SCH	DIA/THK	CAL BLOCKS	COMMENTS
****** Category A, One-Directional ******									
F01.010.051	2-R-NI-1041		CN-2491-NI027	QAL-14	VT-3	NA	6.000		
	Rigid Support	NI	CN-ISIN3-2562-1.3				0.000		
Class A									
F01.010.052	2-R-NI-1045		CN-2491-NI027	QAL-14	VT-3	NA	6.000		
	Rigid Support	NI	CN-ISIN3-2562-1.3				0.000		
Class A									
F01.010.053	2-R-NI-1052		CN-2491-NI032	QAL-14	VT-3	NA	10.000		
	Rigid Support	NI	CN-ISIN3-2562-1.1				0.000		
Class A									
F01.010.091	2-R-NV-1457		CN-2491-NV082	QAL-14	VT-3	NA	2.000		
	Rigid Support	NV	CN-ISIN3-2554-1.0				0.000		
Class A									
F01.010.092	2-R-NV-1458		CN-2491-NV082	QAL-14	VT-3	NA	2.000		
	Rigid Support	NV	CN-ISIN3-2554-1.0				0.000		
Class A									
F01.010.093	2-R-NV-1461		CN-2491-NV082	QAL-14	VT-3	NA	2.000		
	Rigid Support	NV	CN-ISIN3-2554-1.0				0.000		
Class A									
Total F01.010 Items:	**6**								
****** Category B, Multi-Directional ******									
F01.011.001	2-R-NC-1000		CN-2491-NC028	QAL-14	VT-3	NA	2.000		
	Rigid Restraint	NC	CN-ISIN3-2553-1.0				0.000		
Class A									
Total F01.011 Items:	**1**								

****** Category C, Thermal Movement ******

CATEGORY F-A, Supports

Class 1 Piping Supports

Catawba 2

Inservice Inspection Plan for Interval 3 Outage 2

ITEM NUMBER	ID NUMBER	SYS	ISO/DWG NUMBERS	PROC	INSP REQ	MAT/SCH	DIA/THK	CAL BLOCKS	COMMENTS
F01.012.002	2-R-NC-1008		CN-2491-NC028	QAL-14	VT-3	NA	2.000		
	Spring Hgr	NC	CN-ISIN3-2553-1.0				0.000		
Class A									

Total F01.012 Items: 1

CATEGORY F-A, Supports

DUKE ENERGY CORPORATION
INSERVICE INSPECTION PLAN MANAGEMENT
Inservice Inspection Database Management System

Class 2 Piping Supports

Catawba 2
Inservice Inspection Plan for Interval 3 Outage 2

ITEM NUMBER	ID NUMBER	SYS	ISO/DWG NUMBERS	PROC	INSP REQ	MAT/SCH	DIA/THK	CAL BLOCKS	COMMENTS
**** Category A, One-Directional ****									
F01.020.008	2-R-CA-1555		CN-2491-CA004	QAL-14	VT-3	NA	2.000		
	Rigid Support	CA	CN-ISIN3-2592-1.1				0.000		
Class B									
F01.020.010	2-R-CA-1533		CN-2491-CA022	QAL-14	VT-3	NA	2.000		
	Rigid Support	CA	CN-ISIN3-2592-1.1				0.218		
Class B									
F01.020.011	2-R-CF-1521		CN-2491-CF002	QAL-14	VT-3	NA	18.000		
	Rigid Support	CF	CN-ISIN3-2591-1.1				0.750		
Class B									
F01.020.064	2-R-NI-1040		CN-2491-NI037	QAL-14	VT-3	NA	6.000		
	Rigid Support	NI	CN-ISIN3-2562-1.3				0.000		
Class B									
F01.020.065	2-R-NI-1675		CN-2491-NI037	QAL-14	VT-3	NA	6.000		
	Rigid Support	NI	CN-ISIN3-2562-1.3				0.000		
Class B									
F01.020.094	2-R-NS-1207		CN-2491-NS002	QAL-14	VT-3	NA	8.000		
	Rigid Support	NS	CN-ISIN3-2563-1.0				0.000		
Class B									
F01.020.095	2-R-NS-1210		CN-2491-NS002	QAL-14	VT-3	NA	8.000		
	Rigid Support	NS	CN-ISIN3-2563-1.0				0.000		
Class B									
F01.020.096	2-R-NS-1213		CN-2491-NS002	QAL-14	VT-3	NA	8.000		
	Rigid Support	NS	CN-ISIN3-2563-1.0				0.000		
Class B									

CATEGORY F-A, Supports

Class 2 Piping Supports

ITEM NUMBER	ID NUMBER	SYS	ISO/DWG NUMBERS	PROC	INSP REQ	MAT/SCH	DIA/THK	CAL BLOCKS	COMMENTS
F01.020.144	2-R-NV-1035		CN-2491-NV039	QAL-14	VT-3	NA	2.000		
	Rigid Support	NV	CN-ISIN3-2554-1.5				0.000		
Class B									
F01.020.145	2-R-NV-1036		CN-2491-NV039	QAL-14	VT-3	NA	2.000		
	Rigid Support	NV	CN-ISIN3-2554-1.5				0.000		
Class B									
F01.020.146	2-R-NV-1037		CN-2491-NV039	QAL-14	VT-3	NA	2.000		
	Rigid Support	NV	CN-ISIN3-2554-1.5				0.000		
Class B									
F01.020.147	2-R-NV-1013		CN-2491-NV041	QAL-14	VT-3	NA	2.000		
	Rigid Support	NV	CN-ISIN3-2554-1.5				0.000		
Class B									
F01.020.148	2-R-NV-1014		CN-2491-NV041	QAL-14	VT-3	NA	2.000		
	Rigid Support	NV	CN-ISIN3-2554-1.5				0.000		
Class B									
F01.020.191	2-R-SA-1505		CN-2491-SA001	QAL-14	VT-3	NA	6.000		
	Rigid Support	SA	CN-ISIN3-2593-1.1				0.000		
Class B									
F01.020.192	2-R-SA-1506		CN-2491-SA001	QAL-14	VT-3	NA	6.000		
	Rigid Support	SA	CN-ISIN3-2593-1.1				0.000		
Class B									
F01.020.193	2-R-SA-1507		CN-2491-SA001	QAL-14	VT-3	NA	6.000		
	Rigid Support	SA	CN-ISIN3-2593-1.1				0.000		
Class B									
F01.020.194	2-R-SA-1508		CN-2491-SA001	QAL-14	VT-3	NA	6.000		
	Rigid Support	SA	CN-ISIN3-2593-1.1				0.000		
Class B									

CATEGORY F-A, Supports

Class 2 Piping Supports

ITEM NUMBER	ID NUMBER	SYS	ISO/DWG NUMBERS	PROC	INSP REQ	MAT/SCH	DIA/THK	CAL BLOCKS	COMMENTS
F01.020.203	2-R-SM-1559		CN-2491-SM003	QAL-14	VT-3	NA	34.000		
	Rigid Support	SM	CN-ISIN3-2593-1.0				0.750		
Class B									

Total F01.020 Items: 18

****** Category B, Multi-Directional ******

F01.021.021	2-R-FW-0119		CN-2492-FW019	QAL-14	VT-3	NA	12.000		
	Rigid Restraint	FW	CN-ISIN3-2571-1.0				0.000		
Class B									
F01.021.066	2-R-NI-1034		CN-2491-NI037	QAL-14	VT-3	NA	6.000		
	Rigid Restraint	NI	CN-ISIN3-2562-1.3				0.000		
Class B									
F01.021.067	2-R-NI-1035		CN-2491-NI037	QAL-14	VT-3	NA	6.000		
	Rigid Restraint	NI	CN-ISIN3-2562-1.3				0.000		
Class B									
F01.021.068	2-R-NI-1036		CN-2491-NI037	QAL-14	VT-3	NA	6.000		
	Rigid Restraint	NI	CN-ISIN3-2562-1.3				0.000		
Class B									
F01.021.069	2-R-NI-1038		CN-2491-NI037	QAL-14	VT-3	NA	6.000		
	Rigid Restraint	NI	CN-ISIN3-2562-1.3				0.000		
Class B									
F01.021.070	2-R-NI-1676		CN-2491-NI037	QAL-14	VT-3	NA	6.000		
	Rigid Restraint	NI	CN-ISIN3-2562-1.3				0.500		
Class B									
F01.021.147	2-R-NV-1038		CN-2491-NV039	QAL-14	VT-3	NA	2.000		
	Rigid Restraint	NV	CN-ISIN3-2554-1.5				0.000		
Class B									

CATEGORY F-A, Supports

Class 2 Piping Supports

ITEM NUMBER	ID NUMBER	SYS	ISO/DWG NUMBERS	PROC	INSP REQ	MAT/SCH	DIA/THK	CAL BLOCKS	COMMENTS
F01.021.148	2-R-NV-1040		CN-2491-NV039	QAL-14	VT-3	NA	2.000		
	Rigid Restraint	NV	CN-ISIN3-2554-1.5				0.000		
Class B									
F01.021.149	2-R-NV-1041		CN-2491-NV039	QAL-14	VT-3	NA	2.000		
	Rigid Restraint	NV	CN-ISIN3-2554-1.5				0.000		
Class B									

Total F01.021 Items: 9

****** Category C, Thermal Movement ******

F01.022.002	2-R-CA-1645		CN-2491-CA005	QAL-14	VT-3	NA	6.000		
	Spring Hgr	CA	CN-ISIN3-2592-1.1				0.000		
Class B									
F01.022.004	2-R-CA-1590		CN-2491-CA.00-002	QAL-14	VT-3	NA	4.000		
	Mech Snubber	CA	CN-ISIN3-2592-1.1				0.000		
Class B									
F01.022.011	2-R-CF-1581		CN-2491-CF001	QAL-14	VT-3	NA	18.000		Do Not Select As Welded Attachment Examination
	Mech Snubber	CF	CN-ISIN3-2591-1.1				0.750		Per Letter From M.Shutt Dated 03/03/05.
Class B									
F01.022.012	2-R-CF-1584		CN-2491-CF001	QAL-14	VT-3	NA	18.000		Do Not Select As Welded Attachment Examination
	Mech Snubber	CF	CN-ISIN3-2591-1.1				0.750		Per Letter From M.Shutt Dated 03/03/05.
Class B									
F01.022.021	2-R-FW-0115		CN-2492-FW019	QAL-14	VT-3	NA	12.000		
	Mech Snubber	FW	CN-ISIN3-2571-1.0				0.000		
Class B									
F01.022.091	2-R-NS-0096		CN-2492-NS001	QAL-14	VT-3	NA	12.000		
	Mech Snubber	NS	CN-ISIN3-2563-1.0				0.000		
Class B									

CATEGORY F-A, Supports

Class 2 Piping Supports

ITEM NUMBER	ID NUMBER	SYS	ISO/DWG NUMBERS	PROC	INSP REQ	MAT/SCH	DIA/THK	CAL BLOCKS	COMMENTS
F01.022.092	2-R-NS-0086		CN-2492-NS014	QAL-14	VT-3	NA	10.000		
	Spring Hgr	NS	CN-ISIN3-2563-1.0				0.500		
Class B									
F01.022.141	2-R-NV-0242		CN-2492-NV034	QAL-14	VT-3	NA	3.000		
	Mec Snb/Spr Hgr	NV	CN-ISIN3-2554-1.2				0.000		
Class B									
F01.022.142	2-R-NV-0243		CN-2492-NV034	QAL-14	VT-3	NA	3.000		
	Mech Snubber	NV	CN-ISIN3-2554-1.2				0.000		
Class B									
F01.022.191	2-R-SA-1502		CN-2491-SA001	QAL-14	VT-3	NA	6.000		
	Spring Hgr	SA	CN-ISIN3-2593-1.1				0.000		
Class B									
F01.022.192	2-R-SA-1504		CN-2491-SA001	QAL-14	VT-3	NA	6.000		
	Mech Snubber	SA	CN-ISIN3-2593-1.1				0.000		
Class B									
F01.022.201	2-R-SM-1550		CN-2491-SM003	QAL-14	VT-3	NA	34.000		Do Not Select As Welded Attachment Examination
	Mech Snubber	SM	CN-ISIN3-2593-1.0				0.750		Per Letter From M.Shutt Dated 03/03/05.
Class B									
F01.022.202	2-R-SM-1551		CN-2491-SM003	QAL-14	VT-3	NA	34.000		Do Not Select As Welded Attachment Examination
	Mech Snubber	SM	CN-ISIN3-2593-1.0				0.750		Per Letter From M.Shutt Dated 03/03/05.
Class B									
F01.022.203	2-R-SM-1552		CN-2491-SM003	QAL-14	VT-3	NA	34.000		Do Not Select As Welded Attachment Examination
	Spring Hgr	SM	CN-ISIN3-2593-1.0				0.750		Per Letter From M.Shutt Dated 03/03/05.
Class B									
F01.022.204	2-R-SM-1553		CN-2491-SM003	QAL-14	VT-3	NA	34.000		Do Not Select As Welded Attachment Examination
	Mech Snubber	SM	CN-ISIN3-2593-1.0				0.750		Per Letter From M.Shutt Dated 03/03/05.
Class B									

CATEGORY F-A, Supports

Class 2 Piping Supports

ITEM NUMBER	ID NUMBER	SYS	ISO/DWG NUMBERS	PROC	INSP REQ	MAT/SCH	DIA/THK	CAL BLOCKS	COMMENTS
F01.022.210	2-R-SM-1018		CN-2491-SM010	QAL-14	VT-3	NA	34.000		
	Mech Snubber	SM	CN-ISIN3-2593-1.0				1.000		
Class B									
F01.022.221	2-R-SV-1568		CN-2491-SV005	QAL-14	VT-3	NA	6.000		
	Mech Snubber	SV	CN-ISIN3-2593-1.0				0.000		
Class B									

Total F01.022 Items: 17

CATEGORY F-A, Supports

Class 3 Piping Supports

ITEM NUMBER	ID NUMBER	SYS	ISO/DWG NUMBERS	PROC	INSP REQ	MAT/SCH	DIA/THK	CAL BLOCKS	COMMENTS
**** Category A, One-Directional ****									
F01.030.001	2-R-CA-0019		CN-2492-CA001	QAL-14	VT-3	NA	10.000		
	Rigid Support	CA	CN-ISIN3-2592-1.0				0.000		
Class C									
F01.030.002	2-R-CA-0047		CN-2492-CA020	QAL-14	VT-3	NA	6.000		
	Rigid Support	CA	CN-ISIN3-2592-1.0				0.000		
Class C									
F01.030.003	2-R-CA-0038		CN-2492-CA024	QAL-14	VT-3	NA	6.000		
	Rigid Support	CA	CN-ISIN3-2592-1.0				0.000		
Class C									
F01.030.004	2-R-CA-0040		CN-2492-CA024	QAL-14	VT-3	NA	6.000		
	Rigid Support	CA	CN-ISIN3-2592-1.0				0.000		
Class C									
F01.030.005	2-R-CA-0175		CN-2492-CA055	QAL-14	VT-3	NA	8.000		
	Rigid Support	CA	CN-ISIN3-2592-1.0				0.000		
Class C									
F01.030.006	2-R-CA-0176		CN-2492-CA055	QAL-14	VT-3	NA	8.000		
	Rigid Support	CA	CN-ISIN3-2592-1.0				0.000		
Class C									
Total F01.030 Items:	**6**								
**** Category B, Multi-Directional ****									
F01.031.005	2-R-CA-0021		CN-2492-CA004	QAL-14	VT-3	NA	10.000		
	Rigid Restraint	CA	CN-ISIN3-2592-1.0				0.000		
Class C									
F01.031.006	2-R-CA-0053		CN-2492-CA020	QAL-14	VT-3	NA	6.000		
	Rigid Restraint	CA	CN-ISIN3-2592-1.0				0.000		
Class C									

CATEGORY F-A, Supports

Class 3 Piping Supports

Catawba 2
Inservice Inspection Plan for Interval 3 Outage 2

ITEM NUMBER	ID NUMBER	SYS	ISO/DWG NUMBERS	PROC	INSP REQ	MAT/SCH	DIA/THK	CAL BLOCKS	COMMENTS
F01.031.252	2-R-YC-0006		CN-2525-YC001	QAL-14	VT-3	NA	8.000		Inspect with D01.020.061.
	Rigid Restraint	YC	CN-ISIN3-1578-2.2				0.500		
Class C									

Total F01.031 Items: 3

****** Category C, Thermal Movement ******

F01.032.001	2-R-CA-0204		CN-2492-CA040	QAL-14	VT-3	NA	6.000		
	Spring Hgr	CA	CN-ISIN3-2592-1.0				0.500		
Class C									
F01.032.151	2-R-RN-0208		CN-2492-RN086	QAL-14	VT-3	NA	18.000		
	Mech Snubber	RN	CN-ISIN3-2574-2.0				0.000		
Class C									
F01.032.201	2-R-TE-0025		CN-2492-TE001	QAL-14	VT-3	NA	12.000		
	Mech Snubber	TE	CN-ISIN3-2593-1.2				0.000		
Class C									

Total F01.032 Items: 3

CATEGORY F-A, Supports

Supports Other Than Piping Supports

ITEM NUMBER	ID NUMBER	SYS	ISO/DWG NUMBERS	PROC	INSP REQ	MAT/SCH	DIA/THK	CAL BLOCKS	COMMENTS
**** Class 1, 2, and 3 ****									
F01.040.001	2PZR-LUGS		CNM 2201.01.110	QAL-14	VT-3	NA	0.000		PZR Seimic Lugs (Item Nos. 10A, 10B, 10C, 10D) and Upper Support Frame.
	Rigid Support	NC	CN-ISIN3-2553-1.0				4.000		
Class A									
F01.040.102	2ELDHX-SUPPORT		CNM 1201.06-37	QAL-14	VT-3	NA	0.000		Excess Letdown Heat Exchanger Support.
	Rigid Support	NV	CN-ISIN3-2554-1.0				0.375		
Class B									
F01.040.104	2VCT-SUPPORT		CNM 1201.04-102	QAL-14	VT-3	NA	0.000		Volume Control Tank Support (4 Legs). Tanks are not considered pressure vessels so there is no examination requirements for Examination Category C-C.
	Rigid Support	NV	CN-ISIN3-2554-1.1				0.250		
Class B									
F01.040.106	2LDHX-SUPPORT		CNM 1201.06-58	QAL-14	VT-3	NA	0.000		Vertical Letdown Heat Exchanger Support.
	Rigid Support	NV	CN-ISIN3-2554-1.6				0.000		
Class B									
F01.040.110	2RHRPA-SUPPORT		CNM 1201.05-289	QAL-14	VT-3	NA	0.000		Residual Heat Removal Pump 2A Support.
	Rigid Support	ND	CN-ISIN3-2561-1.0				1.000		
Class B									
F01.040.111	2RHRA-SKIRT		CNM 1201.06-38	QAL-14	VT-3	NA	0.000		Residual Heat Removal Heat Exchanger 2A Support Skirt.
	Rigid Support	ND	CN-ISIN3-2561-1.1				0.750		
Class B			CNM 1201.06-83						

Total F01.040 Items: 6

Total F01 Items: 70

ITEM NUMBER	ID NUMBER	SYS	ISO/DWG NUMBERS	PROC	INSP REQ	MAT/SCH	DIA/THK	CAL BLOCKS	COMMENTS
G02.001.034	2SM56-04		CN-2SM-056	NDE-600	UT	CS	34.000	Component	Depending on the examiners qualifications, Procedure PDI-UT-1 may be used in lieu of NDE-600. If PDI-UT-1 is used, Calibration Block PDI-UT-1-C may be used.
		SM	CN-ISIN3-2593-1.0				2.375		
Class B									
G02.001.034A	2SM56-04		CN-2SM-056	NDE-25	MT	CS	34.000		
		SM	CN-ISIN3-2593-1.0				2.375		
Class B									
G02.001.035	2SM56-03		CN-2SM-056	NDE-600	UT	CS	34.000	Component	Depending on the examiners qualifications, Procedure PDI-UT-1 may be used in lieu of NDE-600. If PDI-UT-1 is used, Calibration Block PDI-UT-1-C may be used.
		SM	CN-ISIN3-2593-1.0				2.375		
Class B									
G02.001.035A	2SM56-03		CN-2SM-056	NDE-25	MT	CS	34.000		
		SM	CN-ISIN3-2593-1.0				2.375		
Class B									
G02.001.036	2SM-8A-A		CN-2SM-057	NDE-600	UT	CS	34.000	Component	Grinnell Piece Mark CW-SM-8A Weld A. Depending on the examiners qualifications, Procedure PDI-UT-1 may be used in lieu of NDE-600. If PDI-UT-1 is used, Calibration Block PDI-UT-1-C may be used.
		SM	CN-ISIN3-2593-1.0				2.375		
Class B									
G02.001.036A	2SM-8A-A		CN-2SM-057	NDE-25	MT	CS	34.000		Grinnell Piece Mark CW-SM-8A Weld A
		SM	CN-ISIN3-2593-1.0				2.375		
Class B									
G02.001.037	2SM57-10		CN-2SM-057	NDE-600	UT	CS	34.000	Component	Depending on the examiners qualifications, Procedure PDI-UT-1 may be used in lieu of NDE-600. If PDI-UT-1 is used, Calibration Block PDI-UT-1-C may be used.
		SM	CN-ISIN3-2593-1.0				2.375		
Class B									
G02.001.037A	2SM57-10		CN-2SM-057	NDE-25	MT	CS	34.000		
		SM	CN-ISIN3-2593-1.0				2.375		
Class B									

ITEM NUMBER	ID NUMBER	SYS	ISO/DWG NUMBERS	PROC	INSP REQ	MAT/SCH	DIA/THK	CAL BLOCKS	COMMENTS
G02.001.038	2SM-7A-A		CN-2SM-057	NDE-600	UT	CS	34.000	Component	Grinnell Piece Mark CW-SM-7A Weld A. Depending on the examiners qualifications, Procedure PDI-UT-1 may be used in lieu of NDE-600. If PDI-UT-1 is used, Calibration Block PDI-UT-1-C may be used.
		SM	CN-ISIN3-2593-1.0				1.750		
Class B									
G02.001.038A	2SM-7A-A		CN-2SM-057	NDE-25	MT	CS	34.000		Grinnell Piece Mark CW-SM-7A Weld A
		SM	CN-ISIN3-2593-1.0				1.750		
Class B									
G02.001.039	2SM59-04		CN-2SM-059	NDE-600	UT	CS	34.000	Component	Depending on the examiners qualifications, Procedure PDI-UT-1 may be used in lieu of NDE-600. If PDI-UT-1 is used, Calibration Block PDI-UT-1-C may be used.
		SM	CN-ISIN3-2593-1.0				1.750		
Class B									
G02.001.039A	2SM59-04		CN-2SM-059	NDE-25	MT	CS	34.000		
		SM	CN-ISIN3-2593-1.0				1.750		
Class B									
G02.001.040	2SM59-03		CN-2SM-059	NDE-600	UT	CS	34.000	Component	Depending on the examiners qualifications, Procedure PDI-UT-1 may be used in lieu of NDE-600. If PDI-UT-1 is used, Calibration Block PDI-UT-1-C may be used.
		SM	CN-ISIN3-2593-1.0				1.750		
Class B									
G02.001.040A	2SM59-03		CN-2SM-059	NDE-25	MT	CS	34.000		
		SM	CN-ISIN3-2593-1.0				1.750		
Class B									
G02.001.041	2SM-5A-A		CN-2SM-059	NDE-600	UT	CS	34.000	Component	Grinnell Piece Mark CW-SM-5A Weld A. Depending on the examiners qualifications, Procedure PDI-UT-1 may be used in lieu of NDE-600. If PDI-UT-1 is used, Calibration Block PDI-UT-1-C may be used.
		SM	CN-ISIN3-2593-1.0				1.375		
Class B									
G02.001.041A	2SM-5A-A		CN-2SM-059	NDE-25	MT	CS	34.000		Grinnell Piece Mark CW-SM-5A Weld A
		SM	CN-ISIN3-2593-1.0				1.375		
Class B									

ITEM NUMBER	ID NUMBER	SYS	ISO/DWG NUMBERS	PROC	INSP REQ	MAT/SCH	DIA/THK	CAL BLOCKS	COMMENTS
G02.001.042	2SM59-02		CN-2SM-059	NDE-600	UT	CS	34.000	Component	Depending on the examiners qualifications, Procedure PDI-UT-1 may be used in lieu of NDE-600. If PDI-UT-1 is used, Calibration Block PDI-UT-1-C may be used.
		SM	CN-ISIN3-2593-1.0				1.375		
Class B									
G02.001.042A	2SM59-02		CN-2SM-059	NDE-25	MT	CS	34.000		
		SM	CN-ISIN3-2593-1.0				1.375		
Class B									
G02.001.043	2SM-4A-A		CN-2SM-059	NDE-600	UT	CS	34.000	Component	Grinnell Piece Mark CW-SM-4A Weld A. Depending on the examiners qualifications, Procedure PDI-UT-1 may be used in lieu of NDE-600. If PDI-UT-1 is used, Calibration Block PDI-UT-1-C may be used.
		SM	CN-ISIN3-2593-1.0				1.375		
Class B									
G02.001.043A	2SM-4A-A		CN-2SM-059	NDE-25	MT	CS	34.000		Grinnell Piece Mark CW-SM-4A Weld A
		SM	CN-ISIN3-2593-1.0				1.375		
Class B									
G02.001.044	2SM59-01		CN-2SM-059	NDE-600	UT	CS	34.000	Component	Depending on the examiners qualifications, Procedure PDI-UT-1 may be used in lieu of NDE-600. If PDI-UT-1 is used, Calibration Block PDI-UT-1-C may be used.
		SM	CN-ISIN3-2593-1.0				1.375		
Class B									
G02.001.044A	2SM59-01		CN-2SM-059	NDE-25	MT	CS	34.000		
		SM	CN-ISIN3-2593-1.0				1.375		
Class B									
G02.001.045	2SM59-27		CN-2SM-059	NDE-600	UT	CS	34.000	Component	Depending on the examiners qualifications, Procedure PDI-UT-1 may be used in lieu of NDE-600. If PDI-UT-1 is used, Calibration Block PDI-UT-1-C may be used.
		SM	CN-ISIN3-2593-1.0				1.375		
Class B									
G02.001.045A	2SM59-27		CN-2SM-059	NDE-25	MT	CS	34.000		
		SM	CN-ISIN3-2593-1.0				1.375		
Class B									

Total G02.001 Items: 24

Total G02 Items: 24

CATEGORY AUG, Augmented Inspections

DUKE ENERGY CORPORATION
INSERVICE INSPECTION PLAN MANAGEMENT
Inservice Inspection Database Management System

Catawba 2

Inservice Inspection Plan for Interval 3 Outage 2

ITEM NUMBER	ID NUMBER	SYS	ISO/DWG NUMBERS	PROC	INSP REQ	MAT/SCH	DIA/THK	CAL BLOCKS	COMMENTS
G03.001.001	2NC141-07	NC	CN-2NC-141 CN-ISIN3-2562-1.0	NDE-910	UT	SS	1.500 0.281	50202	Loop 2A
Class A					Nozzle to Pipe				
G03.001.002	2NC141-BEND-AA	NC	CN-2NC-141 CN-ISIN3-2562-1.0	NDE-910	UT	SS	1.500 0.281	50202	Loop 2A Pipe Bend
Class A									
G03.001.003	2NC141-06	NC	CN-2NC-141 CN-ISIN3-2562-1.0	NDE-910	UT	SS	1.500 0.281	50202	Loop 2A
Class A					Pipe to Elbow				
G03.001.004	2NC141-05	NC	CN-2NC-141 CN-ISIN3-2562-1.0	NDE-910	UT	SS	1.500 0.281	50202	Loop 2A
Class A					Pipe to Elbow				
G03.001.005	2NC145-06	NC	CN-2NC-145 CN-ISIN3-2562-1.0	NDE-910	UT	SS	1.500 0.281	50202	Loop 2B
Class A					Nozzle to Pipe				
G03.001.006	2NC145-BEND-BB	NC	CN-2NC-145 CN-ISIN3-2562-1.0	NDE-910	UT	SS	1.500 0.281	50202	Loop 2B Pipe Bend
Class A									
G03.001.007	2NC145-05	NC	CN-2NC-145 CN-ISIN3-2562-1.0	NDE-910	UT	SS	1.500 0.281	50202	Loop 2B
Class A					Pipe to Pipe				
G03.001.008	2NC145-BEND-CC	NC	CN-2NC-145 CN-ISIN3-2562-1.0	NDE-910	UT	SS	1.500 0.281	50202	Loop 2B Pipe Bend
Class A									

CATEGORY AUG, Augmented Inspections

DUKE ENERGY CORPORATION
INSERVICE INSPECTION PLAN MANAGEMENT
Inservice Inspection Database Management System

Catawba 2

Inservice Inspection Plan for Interval 3 Outage 2

ITEM NUMBER	ID NUMBER	SYS	ISO/DWG NUMBERS	PROC	INSP REQ	MAT/SCH	DIA/THK	CAL BLOCKS	COMMENTS
G03.001.009	2NC146-06		CN-2NC-146	NDE-910	UT	SS	1.500	50202	Loop 2C
		NC	CN-ISIN3-2562-1.0				0.281		
Class A					Nozzle to Pipe				
G03.001.010	2NC146-BEND-AA		CN-2NC-146	NDE-910	UT	SS	1.500	50202	Loop 2C Pipe Bend
		NC	CN-ISIN3-2562-1.0				0.281		
Class A									
G03.001.011	2NC146-05		CN-2NC-146	NDE-910	UT	SS	1.500	50202	Loop 2C
		NC	CN-ISIN3-2562-1.0				0.281		
Class A					Pipe to Pipe				
G03.001.012	2NC146-BEND-BB		CN-2NC-146	NDE-910	UT	SS	1.500	50202	Loop 2C Pipe Bend
		NC	CN-ISIN3-2562-1.0				0.281		
Class A									
G03.001.013	2NC140-05		CN-2NC-140	NDE-910	UT	SS	1.500	50202	Loop 2D
		NC	CN-ISIN3-2562-1.0				0.281		
Class A					Nozzle to Pipe				
G03.001.014	2NC140-BEND-CC		CN-2NC-140	NDE-910	UT	SS	1.500	50202	Loop 2D Pipe Bend
		NC	CN-ISIN3-2562-1.0				0.281		
Class A									
G03.001.015	2NC140-BEND-BB		CN-2NC-140	NDE-910	UT	SS	1.500	50202	Loop 2D Pipe Bend
		NC	CN-ISIN3-2562-1.0				0.281		
Class A									
G03.001.016	2NC140-04		CN-2NC-140	NDE-910	UT	SS	1.500	50202	Loop 2D
		NC	CN-ISIN3-2562-1.0				0.281		
Class A					Pipe to Pipe				

Total G03.001 Items: 16

Total G03 Items: 16

ITEM NUMBER	ID NUMBER	SYS	ISO/DWG NUMBERS	PROC	INSP REQ	MAT/SCH	DIA/THK	CAL BLOCKS	COMMENTS
G05.001.001	RPV-HEAD-PEN			See Com	UT	CS-Inconel	0.000		RPV Head Penetration Nozzles (Nozzle Base Material) from two (2) inches above the J-groove weld to the bottom of the nozzle and an assessment by ultrasonic testing to determine if leakage has occurred into or a leak path exists in the interference fit zone, defined by the annulus between the RPV head penetration nozzle and the RPV head low alloy steel. Vendor and special equipment required. Examinations to be done within five (5) years of 2/11/2003, and thereafter at least every four (4) refueling outages or seven (7) years, whichever occurs first. The inspections will begin in EOC-15. Time between inspections may be shortened, but not lengthened. If time between inspections is shortened, next inspection will occur at frequencies stipulated above. (For responsible individual, contact J. M. Shuping and Reactor Vessel Engineering/Materials Group). Reference NRC Order EA-03-009. Inspect during EOC-15 and EOC-19 (3rd Interval).
	Circumferential	NC	CN-ISIN3-2553-1.0				0.000		
Class A			CNM 2201.01-94						
G05.001.002	RPV-HEAD-PEN			See Comm	VT-2	CS-Inconel	0.000		Bare metal visual examination of 100% of the reactor pressure vessel head surface (including 360 degrees around each RPV head penetration nozzle). MP/0/A/7150/042D Reactor Vessel Head Penetration Visual Inspection. Examination to be done at least every three (3) refueling outages or five (5) years, whichever occurs first. The inspections will begin in EOC-15. Time between inspections may be shortened, but not lengthened. If time between inspections is shortened, next inspection will occur at frequencies stipulated above. (For responsible individual, contact J. M. Shuping and Reactor Vessel Engineering/Materials Group). Reference NRC Order EA-03-009. This examination will utilize a site specific procedure and methods stipulated by the reactor vessel responsible engineer. NRC Order requires reporting of inspection results 30 days after restart of unit.
	Circumferential	NC	CN-ISIN3-2553-1.0				0.000		
Class A			CNM 2201.01-94						

CATEGORY AUG, Augmented Inspections

ITEM NUMBER	ID NUMBER	SYS	ISO/DWG NUMBERS	PROC	INSP REQ	MAT/SCH	DIA/THK	CAL BLOCKS	COMMENTS
									Inspect during EOC-15 and EOC-18 (3rd Interval).

Total G05.001 Items:	**2**
Total G05 Items:	**2**

ITEM NUMBER	ID NUMBER	SYS	ISO/DWG NUMBERS	PROC	INSP REQ	MAT/SCH	DIA/THK	CAL BLOCKS	COMMENTS
G06.001.001 Class A	2PZR-W4ASE Circumferential Term end Dissimilar	NC	CNM 2201.01-110/1 CNM 2201.01-110/2	QAL-15	VT-2	SS-CS	6.000 0.960		Pressurizer Safety Nozzle Safe End X-Y Quadrant. Bare Metal Visual Examination by VT-2 qualified inspector around 100% of penetration. (For responsibile individual, contact J. M. Shuping, Alloy 600 Engineer Nuclear Technical Services). Reference NRC Bulletin 2004-01). Reference Item Number G08.001.003.
G06.001.002 Class A	2PZR-W4BSE Circumferential Term end Dissimilar	NC	CNM 2201.01-110/1 CNM 2201.01-110/2	QAL-15	VT-2 Nozzle to Safe End	SS-CS	6.000 0.960		Pressurizer Safety Nozzle To Safe End. W-X Quadrant. Bare Metal Visual Examination by VT-2 qualified inspector around 100% of penetration. (For responsibile individual, contact J. M. Shuping, Alloy 600 Engineer Nuclear Technical Services). Reference NRC Bulletin 2004-01). Reference Item Number G08.001.004.
G06.001.003 Class A	2PZR-W4CSE Circumferential Term end Dissimilar	NC	CNM 2201.01-110/1 CNM 2201.01-110/2	QAL-15	VT-2 Nozzle to Safe End	SS-CS	6.000 0.960		Pressurizer Relief Nozzle To Safe End. W-Z Quadrant. Bare Metal Visual Examination by VT-2 qualified inspector around 100% of penetration. (For responsibile individual, contact J. M. Shuping, Alloy 600 Engineer Nuclear Technical Services). Reference NRC Bulletin 2004-01) . Reference Item Number G08.001.005.
G06.001.004 Class A	2PZR-W3SE Circumferential Term end Dissimilar	NC	CNM 2201.01-110/1 CNM 2201.01-110/2	QAL-15	VT-2 Nozzle to Safe End	SS-CS	6.000 0.960		Pressurizer Safety Nozzle To Safe End. Y-Z Quadrant. Bare Metal Visual Examination by VT-2 qualified inspector around 100% of penetration. (For responsibile individual, contact J. M. Shuping, Alloy 600 Engineer Nuclear Technical Services). Reference NRC Bulletin 2004-01) . Reference Item Number G08.001.002.
G06.001.005 Class A	2PZR-W1SE Circumferential Term end Dissimilar	NC	CNM 2201.01-110/1 CNM 2201.01-110/2	QAL-15	VT-2 Nozzle to Safe End	SS-CS	14.000 1.640		Pressurizer Surge Nozzle To Safe End. Bare Metal Visual Examination by VT-2 qualified inspector around 100% of penetration. (For responsibile individual, contact J. M. Shuping, Alloy 600 Engineer Nuclear Technical Services). Reference NRC Bulletin 2004-01) .

ITEM NUMBER	ID NUMBER	SYS	ISO/DWG NUMBERS	PROC	INSP REQ	MAT/SCH	DIA/THK	CAL BLOCKS	COMMENTS
									Reference Item Number G08.001.001.
G06.001.006 Class A	2PZR-W2SE Circumferential Term end Dissimilar	NC	CNM 2201.01-110/1 CNM 2201.01-110/2	QAL-15	VT-2 Nozzle to Safe End	SS-CS	4.000 0.760		Pressurizer Spray Nozzle To Safe End. Bare Metal Visual Examination by VT-2 qualified inspector around 100% of penetration. (For responsibile individual, contact J. M. Shuping, Alloy 600 Engineer Nuclear Technical Services). Reference NRC Bulletin 2004-01). Reference Item Number G08.001.006.
Total G06.001 Items:	**6**								
G06.002.001 Class A	2PZR-MANWAY	NC	CNM 2201.01-110/1 CNM 2201.01-110/2	QAL-15	VT-2	NA	0.000 0.000		Pressurizer Manway Diaphram Seal Weld. Bare Metal Visual Examination by VT-2 qualified inspector. Examine the gap between the Pressurizer Manway Cover and Manway for evidence of diaphram plate seal weld leakage. (For responsibile individual, contact J. M. Shuping, Alloy 600 Engineer Nuclear Technical Services). Reference NRC Bulletin 2004-01)
Total G06.002 Items:	**1**								
Total G06 Items:	**7**								

ITEM NUMBER	ID NUMBER	SYS	ISO/DWG NUMBERS	PROC	INSP REQ	MAT/SCH	DIA/THK	CAL BLOCKS	COMMENTS
G07.001.001 Class A	2PZR-W1SE Circumferential Term end Dissimilar	NC	CNM 2201.01-110/1 CNM 2201.01-110/2	PDI-UT-10	UT Nozzle to Safe End	SS-CS	14.000 1.640		Pressurizer Surge Nozzle To Safe End. Inspect volume and requirements per MRP-139. For responsibile individual, contact J. M. Shuping, Alloy 600 Engineer Nuclear Technical Services). Note: This weld location is also required to be inspected per ASME Section XI, Item Number B05.040.001 in Outage 5 (EOC18).
G07.001.002 Class A	2PZR-W3SE Circumferential Term end Dissimilar	NC	CNM 2201.01-110/1 CNM 2201.01-110/2	PDI-UT-10	UT Nozzle to Safe End	SS-CS	6.000 0.960		Pressurizer Safety Nozzle To Safe End. Y-Z Quadrant. Inspect volume and requirements per MRP-139. For responsibile individual, contact J. M. Shuping, Alloy 600 Engineer Nuclear Technical Services). Note: This weld location is also required to be inspected per ASME Section XI, Item Number B05.040.003 in Outage 5 (EOC18).
G07.001.003 Class A	2PZR-W4ASE Circumferential Term end Dissimilar	NC	CNM 2201.01-110/1 CNM 2201.01-110/2	PDI-UT-10	UT Nozzle to Safe End	SS-CS	6.000 0.960		Pressurizer Safety Nozzle To Safe End. X-Y Quadrant. Inspect volume and requirements per MRP-139. For responsibile individual, contact J. M. Shuping, Alloy 600 Engineer Nuclear Technical Services). Note: This weld location is also required to be inspected per ASME Section XI, Item Number B05.040.004 in Outage 5 (EOC18).
G07.001.004 Class A	2PZR-W4BSE Circumferential Term end Dissimilar	NC	CNM 2201.01-110/1 CNM 2201.01-110/2	PDI-UT-10	UT Nozzle to Safe End	SS-CS	6.000 0.960		Pressurizer Safety Nozzle To Safe End. W-X Quadrant. Inspect volume and requirements per MRP-139. For responsibile individual, contact J. M. Shuping, Alloy 600 Engineer Nuclear Technical Services). Note: This weld location is also required to be inspected per ASME Section XI, Item Number B05.040.005 in Outage 5 (EOC18).
G07.001.005 Class A	2PZR-W4CSE Circumferential Term end Dissimilar	NC	CNM 2201.01-110/1 CNM 2201.01-110/2	PDI-UT-10	UT Nozzle to Safe End	SS-CS	6.000 0.960		Pressurizer Relief Nozzle To Safe End. W-Z Quadrant. Inspect volume and requirements per MRP-139. For responsibile individual, contact J. M. Shuping, Alloy 600 Engineer Nuclear Technical Services).

ITEM NUMBER	ID NUMBER	SYS	ISO/DWG NUMBERS	PROC	INSP REQ	MAT/SCH	DIA/THK	CAL BLOCKS	COMMENTS
									Note: This weld location is also required to be inspected per ASME Section XI, Item Number B05.040.006 in Outage 2 (EOC15).□
G07.001.006	2PZR-W2SE		CNM 2201.01-110/1	PDI-UT-10	UT	SS-CS	4.000		Pressurizer Spray Nozzle To Safe End.
	Circumferential	NC	CNM 2201.01-110/2				0.760		Inspect volume and requirements per MRP-139.
Class A	Term end				Nozzle to				For responsibile individual, contact J. M. Shuping,
	Dissimilar				Safe End				Alloy 600 Engineer Nuclear Technical Services).
									Note: This weld location is also required to be inspected per ASME Section XI, Item Number B05.040.002 in Outage 2 (EOC15).
Total G07.001 Items:	**6**								
G07.003.001	2RPV-201-121ASE		E 8871-171-009	TBD	UT	SS-CS	27.500		RV Inlet Nozzle To Safe End At 113 Degrees (Loop
	Circumferential	NC	CNM 2201.01-74/5				2.500		A). Reactor Building Coordinate is 67 Degrees.
Class A	Term end		CNM 2201.01-0205		Nozzle to				Inspect volume and requirements per MRP-139. UT
	Dissimilar				Safe End				from both sides of the weld. For responsibile
									individual, contact J. M. Shuping, Alloy 600
									Engineer Nuclear Technical Services).
									Note: This weld location is also required to be inspected per ASME Section XI, Item Number B05.010.002 Outage 7 (EOC20).
G07.003.002	2RPV201-121BSE		E 8871-171-009	TBD	UT	SS-CS	27.500		RV Inlet Nozzle To Safe End At 67 Degrees (Loop
	Circumferential	NC	CNM 2201.01-74/5				2.500		B). Reactor Building Coordinate is 113 Degrees.
Class A	Term end		CNM 2201.01-0205		Nozzle to				Inspect volume and requirements per MRP-139. UT
	Dissimilar				Safe End				from both sides of the weld. For responsibile
									individual, contact J. M. Shuping, Alloy 600
									Engineer Nuclear Technical Services).
									Note: This weld location is also required to be inspected per ASME Section XI, Item Number B05.010.001 Outage 7 (EOC20).
G07.003.003	2RPV201-121CSE		E 8871-171-009	TBD	UT	SS-CS	27.500		RV Inlet Nozzle To Safe End At 293 Degrees (Loop
	Circumferential	NC	CNM 2201.01-74/5				2.500		C). Reactor Building Coordinate is 247 Degrees.
Class A	Term end		CNM 2201.01-0205		Nozzle to				Inspect volume and requirements per MRP-139. UT
	Dissimilar				Safe End				from both sides of the weld. For responsibile
									individual, contact J. M. Shuping, Alloy 600
									Engineer Nuclear Technical Services).

ITEM NUMBER	ID NUMBER	SYS	ISO/DWG NUMBERS	PROC	INSP REQ	MAT/SCH	DIA/THK	CAL BLOCKS	COMMENTS
									Note: This weld location is also required to be inspected per ASME Section XI, Item Number B05.010.004 Outage 7 (EOC20).
G07.003.004	2RPV201-121DSE		E 8871-171-009	TBD	UT	SS-CS	27.500		RV Inlet Nozzle To Safe End At 247 Degrees (Loop D). Reactor Building Coordinate is 293 Degrees. Inspect volume and requirements per MRP-139. UT from both sides of the weld. For responsibile individual, contact J. M. Shuping, Alloy 600 Engineer Nuclear Technical Services). Note: This weld location is also required to be inspected per ASME Section XI, Item Number B05.010.003 Outage 7 (EOC20).
	Circumferential	NC	CNM 2201.01-74/5				2.500		
Class A	Term end		CNM 2201.01-0205		Nozzle to Safe End				
	Dissimilar								
Total G07.003 Items:	**4**								
G07.004.001	2RPV-W79-101SE		CNM 2201.01-86	PDI-UT-10	UT	CS-Inconel	6.625		RV Closure Head Pc. 104-101 To UHI Tube Pc. 108-202 At 270 Degrees. Inspect volume and requirements per MRP-139. For responsibile individual, contact J. M. Shuping, Alloy 600 Engineer Nuclear Technical Services). Note: This weld location is also required to be inspected per ASME Section XI, Item Number B05.010.0012 Outage 2 (EOC15).
	Circumferential	NC	E 8871-101-001				0.625		
Class A			E 8871-101-005		Nozzle to Safe End				
	Dissimilar								
G07.004.002	2RPV-W80-101SE		CNM 2201.01-86	PDI-UT-10	UT	CS-Inconel	6.625		RV Closure Head Pc. 104-101 To UHI Tube Pc. 108-202 At 0 Degrees. Inspect volume and requirements per MRP-139. For responsibile individual, contact J. M. Shuping, Alloy 600 Engineer Nuclear Technical Services). Note: This weld location is also required to be inspected per ASME Section XI, Item Number B05.010.009 Outage 2 (EOC15).
	Circumferential	NC	E 8871-101-001				0.625		
Class A			E 8871-101-005		Nozzle to Safe End				
	Dissimilar								
G07.004.003	2RPV-W81-101SE		CNM 2201.01-86	PDI-UT-10	UT	CS-Inconel	6.625		RV Closure Head Pc. 104-101 To UHI Tube Pc. 108-202 At 90 Degrees. Inspect volume and requirements per MRP-139. For responsibile individual, contact J. M. Shuping, Alloy 600 Engineer Nuclear Technical Services). Note: This weld location is also required to be
	Circumferential	NC	E 8871-101-001				0.625		
Class A			E 8871-101-005		Nozzle to Safe End				
	Dissimilar								

ITEM NUMBER	ID NUMBER	SYS	ISO/DWG NUMBERS	PROC	INSP REQ	MAT/SCH	DIA/THK	CAL BLOCKS	COMMENTS
									inspected per ASME Section XI, Item Number B05.010.0010 Outage 2 (EOC15).
G07.004.004 Class A	2RPV-W82-101SE Circumferential Dissimilar	NC	CNM 2201.01-86 E 8871-101-001 E 8871-101-005	PDI-UT-10	UT Nozzle to Safe End	CS-Inconel	6.625 0.625		RV Closure Head Pc. 104-101 To UHI Tube Pc. 108-202 At 180 Degrees. Inspect volume and requirements per MRP-139. For responsibile individual, contact J. M. Shuping, Alloy 600 Engineer Nuclear Technical Services). Note: This weld location is also required to be inspected per ASME Section XI, Item Number B05.010.0011 Outage 2 (EOC15).
G07.004.005 Class A	2RPV-W79-101 Circumferential Dissimilar	NC	CNM 2201.01-67 E 8871-108-002	PDI-UT-10	UT Safe End to Pipe	SS-Inconel	6.250 0.625		UHI Tube 270 Deg. PC. 108-202 to PC. 108-101. UT from both sides. Inspect volume and requirements per MRP-139. For responsibile individual, contact J. M. Shuping, Alloy 600 Engineer Nuclear Technical Services). Note: This weld location is also required to be inspected per ASME Section XI, Item Number B09.011.000 Outage 2 (EOC15).
G07.004.006 Class A	2RPV-W80-101 Circumferential Dissimilar	NC	CNM 2201.01-67 E 8871-108-002	PDI-UT-10	UT Safe End to Pipe	SS-Inconel	6.250 0.625		UHI Tube 0 Deg. PC. 108-202 to PC. 108-101. UT from both sides. Inspect volume and requirements per MRP-139. For responsibile individual, contact J. M. Shuping, Alloy 600 Engineer Nuclear Technical Services). Note: This weld location is also required to be inspected per ASME Section XI, Item Number B09.011.000 Outage 2 (EOC15).
G07.004.007 Class A	2RPV-W81-101 Circumferential Dissimilar	NC	CNM 2201.01-67 E 8871-108-002	PDI-UT-10	UT Safe End to Pipe	SS-Inconel	6.250 0.625		UHI Tube 90 Deg. PC. 108-202 to PC. 108-101. UT from both sides. Inspect volume and requirements per MRP-139. For responsibile individual, contact J. M. Shuping, Alloy 600 Engineer Nuclear Technical Services). Note: This weld location is also required to be inspected per ASME Section XI, Item Number B09.011.000 Outage 2 (EOC15).

CATEGORY AUG, Augmented Inspections

DUKE ENERGY CORPORATION
INSERVICE INSPECTION PLAN MANAGEMENT
Inservice Inspection Database Management System

Catawba 2

Inservice Inspection Plan for Interval 3 Outage 2

ITEM NUMBER	ID NUMBER	SYS	ISO/DWG NUMBERS	PROC	INSP REQ	MAT/SCH	DIA/THK	CAL BLOCKS	COMMENTS
G07.004.008	2RPV-W82-101		CNM 2201.01-67	PDI-UT-10	UT	SS-Inconel	6.250		UHI Tube 180 Deg. PC. 108-202 to PC. 108-101. UT from both sides. Inspect volume and requirements per MRP-139. For responsibile individual, contact J. M. Shuping, Alloy 600 Engineer Nuclear Technical Services). Note: This weld location is also required to be inspected per ASME Section XI, Item Number B09.011.000 Outage 2 (EOC15).
	Circumferential	NC	E 8871-108-002				0.625		
Class A					Safe End to Pipe				
	Dissimilar								

Total G07.004 Items:	**8**
Total G07 Items:	**18**

ITEM NUMBER	ID NUMBER	SYS	ISO/DWG NUMBERS	PROC	INSP REQ	MAT/SCH	DIA/THK	CAL BLOCKS	COMMENTS
G08.001.001 Class A	2PZR-W1SE Circumferential Term end Dissimilar	NC	CNM 2201.01-110/1 CNM 2201.01-110/2	QAL-15	VT-2 Nozzle to Safe End	SS-CS	14.000 1.640		Pressurizer Surge Nozzle To Safe End. Bare Metal Visual Examination by VT-2 qualified inspector per requirements of MRP-139. (For responsible individual, contact J. M. Shuping, Alloy 600 Engineer Nuclear Technical Services). Reference Item Number G06.001.005.
G08.001.002 Class A	2PZR-W3SE Circumferential Term end Dissimilar	NC	CNM 2201.01-110/1 CNM 2201.01-110/2	QAL-15	VT-2 Nozzle to Safe End	SS-CS	6.000 0.960		Pressurizer Safety Nozzle To Safe End. Y-Z Quadrant. Bare Metal Visual Examination by VT-2 qualified inspector per requirements of MRP-139. (For responsible individual, contact J. M. Shuping, Alloy 600 Engineer Nuclear Technical Services). Reference Item Number G06.001.004.
G08.001.003 Class A	2PZR-W4ASE Circumferential Term end Dissimilar	NC	CNM 2201.01-110/1 CNM 2201.01-110/2	QAL-15	VT-2 Nozzle to Safe End	SS-CS	6.000 0.960		Pressurizer Safety Nozzle To Safe End. X-Y Quadrant. Bare Metal Visual Examination by VT-2 qualified inspector per requirements of MRP-139. (For responsible individual, contact J. M. Shuping, Alloy 600 Engineer Nuclear Technical Services). Reference Item Number G06.001.001.
G08.001.004 Class A	2PZR-W4BSE Circumferential Term end Dissimilar	NC	CNM 2201.01-110/1 CNM 2201.01-110/2	QAL-15	VT-2 Nozzle to Safe End	SS-CS	6.000 0.960		Pressurizer Safety Nozzle To Safe End. W-X Quadrant. Bare Metal Visual Examination by VT-2 qualified inspector per requirements of MRP-139. (For responsible individual, contact J. M. Shuping, Alloy 600 Engineer Nuclear Technical Services). Reference Item Number G06.001.002.
G08.001.005 Class A	2PZR-W4CSE Circumferential Term end Dissimilar	NC	CNM 2201.01-110/1 CNM 2201.01-110/2	QAL-15	VT-2 Nozzle to Safe End	SS-CS	6.000 0.960		Pressurizer Relief Nozzle To Safe End. W-Z Quadrant. Bare Metal Visual Examination by VT-2 qualified inspector per requirements of MRP-139. (For responsible individual, contact J. M. Shuping, Alloy 600 Engineer Nuclear Technical Services). Reference Item Number G06.001.003.

ITEM NUMBER	ID NUMBER	SYS	ISO/DWG NUMBERS	PROC	INSP REQ	MAT/SCH	DIA/THK	CAL BLOCKS	COMMENTS
G08.001.006	2PZR-W2SE		CNM 2201.01-110/1	QAL-15	VT-2	SS-CS	4.000		Pressurizer Spray Nozzle To Safe End.
	Circumferential	NC	CNM 2201.01-110/2				0.760		Bare Metal Visual Examination by VT-2 qualified
Class A	Term end				Nozzle to				inspector per requirements of MRP-139. (For
	Dissimilar				Safe End				responsible individual, contact J. M. Shuping, Alloy
									600 Engineer Nuclear Technical Services).
									Reference Item Number G06.001.006.
Total G08.001 Items:	**6**								
G08.002.001	2RPV202-121ASE		E 8871-171-009	QAL-15	VT-2	SS-CS	29.000		RV Outlet Nozzle To Safe End At 158 Degrees
	Circumferential	NC	CNM 2201.01-74/5				2.625		(Loop A). Reactor Building Coordinate is 22
Class A	Term end		CNM 2201.01-0205		Nozzle to				Degrees. To Be Done With B09.011.001.
	Dissimilar				Safe End				Bare Metal Visual Examination by VT-2 qualified
									inspector per requirements of MRP-139. (For
									responsible individual, contact J. M. Shuping, Alloy
									600 Engineer Nuclear Technical Services).
									Note: This weld location is also required to be UT
									inspected per ASME Section XI, Item Number
									B05.010.006 Outage 7 (EOC20).
G08.002.002	2RPV-202-121BSE		E 8871-171-009	QAL-15	VT-2	SS-CS	29.000		RV Outlet Nozzle To Safe End At 22 Degrees (Loop
	Circumferential	NC	CNM 2201.01-74/5				2.625		B). Reactor Building Coordinate is 158 Degrees.
Class A	Term end		CNM 2201.01-0205		Nozzle to				To Be Done With B09.011.005.
	Dissimilar				Safe End				Bare Metal Visual Examination by VT-2 qualified
									inspector per requirements of MRP-139. (For
									responsible individual, contact J. M. Shuping, Alloy
									600 Engineer Nuclear Technical Services).
									Note: This weld location is also required to be UT
									inspected per ASME Section XI, Item Number
									B05.010.005 Outage 7 (EOC20).
G08.002.003	2RPV-202-121CSE		E 8871-171-009	QAL-15	VT-2	SS-CS	29.000		RV Outlet Nozzle To Safe End At 338 Degrees
	Circumferential	NC	CNM 2201.01-74/5				2.625		(Loop C). Reactor Building Coordinate is 202
Class A	Term end		CNM 2201.01-0205		Nozzle to				Degrees. To Be Done With B09.011.009.
	Dissimilar				Safe End				Bare Metal Visual Examination by VT-2 qualified
									inspector per requirements of MRP-139. (For
									responsible individual, contact J. M. Shuping, Alloy
									600 Engineer Nuclear Technical Services).
									Note: This weld location is also required to be UT
									inspected per ASME Section XI, Item Number
									B05.010.008 Outage 7 (EOC20).

ITEM NUMBER	ID NUMBER	SYS	ISO/DWG NUMBERS	PROC	INSP REQ	MAT/SCH	DIA/THK	CAL BLOCKS	COMMENTS
G08.002.004	2RPV-202-121DSE		E 8871-171-009	QAL-15	VT-2	SS-CS	29.000		RV Outlet Nozzle To Safe End At 202 Degrees (Loop D). Reactor Building Coordinate is 338 Degrees. To Be Done With B09.011.013. Bare Metal Visual Examination by VT-2 qualified inspector per requirements of MRP-139. (For responsible individual, contact J. M. Shuping, Alloy 600 Engineer Nuclear Technical Services). Note: This weld location is also required to be UT inspected per ASME Section XI, Item Number B05.010.001 Outage 7 (EOC20).
	Circumferential	NC	CNM 2201.01-74/5				2.625		
Class A	Term end		CNM 2201.01-0205		Nozzle to				
	Dissimilar				Safe End				

Total G08.002 Items: 4

G08.003.001	2RPV-201-121ASE		E 8871-171-009	QAL-15	VT-2	SS-CS	27.500		RV Inlet Nozzle To Safe End At 113 Degrees (Loop A). Reactor Building Coordinate is 67 Degrees. To Be Done With B09.011.004. Bare Metal Visual Examination by VT-2 qualified inspector per requirements of MRP-139. (For responsible individual, contact J. M. Shuping, Alloy 600 Engineer Nuclear Technical Services). Note: This weld location is also required to be UT inspected per ASME Section XI, Item Number B05.010.002 Outage 7 (EOC20).
	Circumferential	NC	CNM 2201.01-74/5				2.500		
Class A	Term end		CNM 2201.01-0205		Nozzle to				
	Dissimilar				Safe End				
G08.003.002	2RPV-201-121BSE		E 8871-171-009	QAL-15	VT-2	SS-CS	27.500		RV Inlet Nozzle To Safe End At 67 Degrees (Loop B). Reactor Building Coordinate is 113 Degrees. To Be Done With B09.011.008. Bare Metal Visual Examination by VT-2 qualified inspector per requirements of MRP-139. (For responsible individual, contact J. M. Shuping, Alloy 600 Engineer Nuclear Technical Services). Note: This weld location is also required to be UT inspected per ASME Section XI, Item Number B05.010.001 Outage 7 (EOC20).
	Circumferential	NC	CNM 2201.01-74/5				2.500		
Class A	Term end		CNM 2201.01-0205		Nozzle to				
	Dissimilar				Safe End				
G08.003.003	2RPV-201-121CSE		E 8871-171-009	QAL-15	VT-2	SS-CS	27.500		RV Inlet Nozzle To Safe End At 293 Degrees (Loop C). Reactor Building Coordinate is 247 Degrees. To Be Done With B09.011.012. Bare Metal Visual Examination by VT-2 qualified inspector per requirements of MRP-139. (For
	Circumferential	NC	CNM 2201.01-74/5				2.500		
Class A	Term end		CNM 2201.01-0205		Nozzle to				
	Dissimilar				Safe End				

ITEM NUMBER	ID NUMBER	SYS	ISO/DWG NUMBERS	PROC	INSP REQ	MAT/SCH	DIA/THK	CAL BLOCKS	COMMENTS
									responsible individual, contact J. M. Shuping, Alloy 600 Engineer Nuclear Technical Services). Note: This weld location is also required to be UT inspected per ASME Section XI, Item Number B05.010.004 Outage 7 (EOC20).
G08.003.004	2RPV-201-121DSE		E 8871-171-009	QAL-15	VT-2	SS-CS	27.500		RV Inlet Nozzle To Safe End At 247 Degrees (Loop D). Reactor Building Coordinate is 293 Degrees. To Be Done With B09.011.016. Bare Metal Visual Examination by VT-2 qualified inspector per requirements of MRP-139. (For responsible individual, contact J. M. Shuping, Alloy 600 Engineer Nuclear Technical Services). Note: This weld location is also required to be UT inspected per ASME Section XI, Item Number B05.010.003 Outage 7 (EOC20).
	Circumferential	NC	CNM 2201.01-74/5				2.500		
Class A	Term end		CNM 2201.01-0205		Nozzle to				
	Dissimilar				Safe End				
Total G08.003 Items:	**4**								
G08.004.001	2RPV-W79-101SE		CNM 2201.01-86	QAL-15	VT-2	CS-Inconel	6.625		RV Closure Head Pc. 104-101 To UHI Tube Pc. 108-202 At 270 Degrees. Bare Metal Visual Examination by VT-2 qualified inspector per requirements of MRP-139. (For responsible individual, contact J. M. Shuping, Alloy 600 Engineer Nuclear Technical Services). Note: This weld location is also required to be UT inspected per ASME Section XI, Item Number B05.010.012 Outage 2 (EOC15).
	Circumferential	NC	E 8871-101-001				0.625		
Class A			E 8871-101-005		Nozzle to				
	Dissimilar				Safe End				
G08.004.002	2RPV-W79-101		CNM 2201.01-67	QAL-15	VT-2	SS-Inconel	6.250		UHI Tube 270 Deg. PC. 108-202 to PC. 108-101 UT from Inconel Side. Bare Metal Visual Examination by VT-2 qualified inspector per requirements of MRP-139. (For responsible individual, contact J. M. Shuping, Alloy 600 Engineer Nuclear Technical Services). Note: This weld location is also required to be UT inspected per ASME Section XI, Item Number B09.011.017 Outage 2 (EOC15).
	Circumferential	NC	E 8871-108-002				0.625		
Class A					Safe End to				
	Dissimilar				Pipe				

ITEM NUMBER	ID NUMBER	SYS	ISO/DWG NUMBERS	PROC	INSP REQ	MAT/SCH	DIA/THK	CAL BLOCKS	COMMENTS
G08.004.003	2RPV-W80-101SE		CNM 2201.01-86	QAL-15	VT-2	CS-Inconel	6.625		RV Closure Head Pc. 104-101 To UHI Tube Pc. 108-202 At 0 Degrees. Bare Metal Visual Examination by VT-2 qualified inspector per requirements of MRP-139. (For responsible individual, contact J. M. Shuping, Alloy 600 Engineer Nuclear Technical Services). Note: This weld location is also required to be UT inspected per ASME Section XI, Item Number B05.010.009 Outage 2 (EOC15).
	Circumferential	NC	E 8871-101-001				0.625		
Class A			E 8871-101-005		Nozzle to Safe End				
	Dissimilar								
G08.004.004	2RPV-W80-101		CNM 2201.01-67	QAL-15	VT-2	SS-Inconel	6.250		UHI Tube 0 Deg. PC. 108-202 to PC. 108-101 UT from Inconel Side. Bare Metal Visual Examination by VT-2 qualified inspector per requirements of MRP-139. (For responsible individual, contact J. M. Shuping, Alloy 600 Engineer Nuclear Technical Services). Note: This weld location is also required to be UT inspected per ASME Section XI, Item Number B09.011.018 Outage 2 (EOC15).
	Circumferential	NC	E 8871-108-002				0.625		
Class A					Safe End to Pipe				
	Dissimilar								
G08.004.005	2RPV-W81-101SE		CNM 2201.01-86	QAL-15	VT-2	CS-Inconel	6.625		RV Closure Head Pc. 104-101 To UHI Tube Pc. 108-202 At 90 Degrees. Bare Metal Visual Examination by VT-2 qualified inspector per requirements of MRP-139. (For responsible individual, contact J. M. Shuping, Alloy 600 Engineer Nuclear Technical Services). Note: This weld location is also required to be UT inspected per ASME Section XI, Item Number B05.010.010 Outage 2 (EOC15).
	Circumferential	NC	E 8871-101-001				0.625		
Class A			E 8871-101-005		Nozzle to Safe End				
	Dissimilar								
G08.004.006	2RPV-W81-101		CNM 2201.01-67	QAL-15	VT-2	SS-Inconel	6.250		UHI Tube 90 Deg. PC. 108-202 to PC. 108-101 UT from Inconel Side. Bare Metal Visual Examination by VT-2 qualified inspector per requirements of MRP-139. (For responsible individual, contact J. M. Shuping, Alloy 600 Engineer Nuclear Technical Services). Note: This weld location is also required to be UT inspected per ASME Section XI, Item Number B09.011.019 Outage 2 (EOC15).
	Circumferential	NC	E 8871-108-002				0.625		
Class A					Safe End to Pipe				
	Dissimilar								

ITEM NUMBER	ID NUMBER	SYS	ISO/DWG NUMBERS	PROC	INSP REQ	MAT/SCH	DIA/THK	CAL BLOCKS	COMMENTS
G08.004.007	2RPV-W82-101SE		CNM 2201.01-86	QAL-15	VT-2	CS-Inconel	6.625		RV Closure Head Pc. 104-101 To UHI Tube Pc. 108-202 At 180 Degrees. Bare Metal Visual Examination by VT-2 qualified inspector per requirements of MRP-139. (For responsible individual, contact J. M. Shuping, Alloy 600 Engineer Nuclear Technical Services). Note: This weld location is also required to be UT inspected per ASME Section XI, Item Number B05.010.011 Outage 2 (EOC15).
	Circumferential	NC	E 8871-101-001				0.625		
Class A			E 8871-101-005		Nozzle to Safe End				
	Dissimilar								
G08.004.008	2RPV-W82-101		CNM 2201.01-67	QAL-15	VT-2	SS-Inconel	6.250		UHI Tube 180 Deg. PC. 108-202 to PC. 108-101 UT from Inconel Side. Bare Metal Visual Examination by VT-2 qualified inspector per requirements of MRP-139. (For responsible individual, contact J. M. Shuping, Alloy 600 Engineer Nuclear Technical Services). Note: This weld location is also required to be UT inspected per ASME Section XI, Item Number B09.011.020 Outage 2 (EOC15).
	Circumferential	NC	E 8871-108-002				0.625		
Class A					Safe End to Pipe				
	Dissimilar								

Total G08.004 Items:	**8**
Total G08 Items:	**22**

Duke Power Company

Quality Assurance Technical Services

Inservice Inspection Plan For:

Catawba Unit 2

Interval 3

ISI Outage 3

Refueling Outage EOC 16

ISI Inspection Listing

Revision 0

DUKE ENERGY CORPORATION
INSERVICE INSPECTION PLAN MANAGEMENT
Inservice Inspection Database Management System

Catawba 2

Inservice Inspection Plan for Interval 3 Outage 3

CATEGORY B-G-1, Pressure Retaining Bolting, Greater Than 2 in. In Diameter

Pumps

ITEM NUMBER	ID NUMBER	SYS	ISO/DWG NUMBERS	PROC	INSP REQ	MAT/SCH	DIA/THK	CAL BLOCKS	COMMENTS
**** Nuts, Bushings, and Washers ****									
B06.190.001	2RCP-2A-FLANGE		CN-2NC-009	QAL-13	VT-1	SS	0.000		Reactor Colant Pump 2A Main Flange Surface.
		NC	CNM 2201.01-115				0.000		Examine When Connection Is Disassembled.
Class A									
B06.190.002	2RCP-2B-FLANGE		CN-2NC-011	QAL-13	VT-1	SS	0.000		Reactor Colant Pump 2B Main Flange Surface.
		NC	CNM 2201.01-115				0.000		Examine When Connection Is Disassembled.
Class A									
B06.190.003	2RCP-2C-FLANGE		CN-2NC-013	QAL-13	VT-1	SS	0.000		Reactor Colant Pump 2C Main Flange Surface.
		NC	CNM 2201.01-115				0.000		Examine When Connection Is Disassembled.
Class A									
B06.190.004	2RCP-2D-FLANGE		CN-2NC-015	QAL-13	VT-1	SS	0.000		Reactor Colant Pump 2D Main Flange Surface.
		NC	CNM 2201.01-115				0.000		Examine When Connection Is Disassembled.
Class A									

Total B06.190 Items: 4

Total B06 Items: 4

DUKE ENERGY CORPORATION
INSERVICE INSPECTION PLAN MANAGEMENT
Inservice Inspection Database Management System
Catawba 2
Inservice Inspection Plan for Interval 3 Outage 3

CATEGORY B-G-2, Pressure Retaining Bolting, 2 in. And Less In Diameter

Heat Exchangers

ITEM NUMBER	ID NUMBER	SYS	ISO/DWG NUMBERS	PROC	INSP REQ	MAT/SCH	DIA/THK	CAL BLOCKS	COMMENTS
****** Bolts, Studs, and Nuts ******									
B07.030.003	2SGB-MW-W-X	NC	CNM 2201.01-59/1 CNM 2201.01-106/1	QAL-13	VT-1	CS	1.880 0.000		Steam Generator 2B Manway Bolting (16 Studs and Nuts). Primary Manway in W-X Quadrant (Inlet Side). Examine All Bolting Material.
Class A									
B07.030.004	2SGB-MW-Z-W	NC	CNM 2201.01-59/1 CNM 2201.01-106/1	QAL-13	VT-1	CS	1.880 0.000		Steam Generator 2B Manway Bolting (16 Studs and Nuts). Primary Manway in Z-W Quadrant (Outlet Side). Examine All Bolting Material.
Class A									

Total B07.030 Items: 2

DUKE ENERGY CORPORATION
INSERVICE INSPECTION PLAN MANAGEMENT
Inservice Inspection Database Management System

Catawba 2

Inservice Inspection Plan for Interval 3 Outage 3

CATEGORY B-G-2, Pressure Retaining Bolting, 2 in. And Less In Diameter

Pumps

ITEM NUMBER	ID NUMBER	SYS	ISO/DWG NUMBERS	PROC	INSP REQ	MAT/SCH	DIA/THK	CAL BLOCKS	COMMENTS
****** Bolts, Studs, and Nuts ******									
B07.050.015	2NV224-MJ1		CN-2NV-224	QAL-13	VT-1	CS	1.000		Flange Bolting (4 Studs, 8 Nuts). Examine All Bolting Material.
		NV	CN-ISIN3-2554-1.5				5.750		
Class A									
B07.050.016	2NV224-MJ2		CN-2NV-224	QAL-13	VT-1	CS	1.000		Flange Bolting (8 Studs, 16 Nuts). Examine All Bolting Material.
		NV	CN-ISIN3-2554-1.5				7.250		
Class A									
B07.050.017	2NV323-MJ1		CN-2NV-323	QAL-13	VT-1	CS	1.000		Flange Bolting (4 Studs, 8 Nuts). Examine All Bolting Material.
		NV	CN-ISIN3-2554-1.5				5.750		
Class A									

Total B07.050 Items: 3

DUKE ENERGY CORPORATION
INSERVICE INSPECTION PLAN MANAGEMENT
Inservice Inspection Database Management System

CATEGORY B-G-2, Pressure Retaining Bolting, 2 in. And Less In Diameter

CRD Housings

Catawba 2

Inservice Inspection Plan for Interval 3 Outage 3

ITEM NUMBER	ID NUMBER	SYS	ISO/DWG NUMBERS	PROC	INSP REQ	MAT/SCH	DIA/THK	CAL BLOCKS	COMMENTS
****** Bolts, Studs, and Nuts ******									
B07.070.002	2NC-27		CN-2NC-24	QAL-13	VT-1	SS	0.880		4"X6" Valve (8 Studs, 8 Nuts). Examine All Studs And Nuts. Inspect Only One Valve In This Group Per Interval.
		NC	CNM-1205.06-41				3.725		
Class A									

Total B07.070 Items: 1

CATEGORY B-G-2, Pressure Retaining Bolting, 2 in. And Less In Diameter

NPS 4 or Larger

DUKE ENERGY CORPORATION
INSERVICE INSPECTION PLAN MANAGEMENT
Inservice Inspection Database Management System

Catawba 2

Inservice Inspection Plan for Interval 3 Outage 3

ITEM NUMBER	ID NUMBER	SYS	ISO/DWG NUMBERS	PROC	INSP REQ	MAT/SCH	DIA/THK	CAL BLOCKS	COMMENTS
B07.080.001	2CRD-HOUSING		CNM 2201.01-74/7 CNM 2201.01-89	QAL-13	VT-1	SS	6.000 0.000		Threaded Housing With Seal Weld. Examine Only CRD Bolting That Is Resued When Housing Is Disassembled.
Class A									

Total B07.080 Items: 1

Total B07 Items: 7

CATEGORY B-J, Pressure Retaining Welds In Piping

Less Than NPS 4

ITEM NUMBER	ID NUMBER	SYS	ISO/DWG NUMBERS	PROC	INSP REQ	MAT/SCH	DIA/THK	CAL BLOCKS	COMMENTS
B09.011.042	2NC26-3		CN-2NC-26	NDE-35	PT	SS	6.000		
	Circumferential	NC	CN-ISIN3-2553-1.0			160	0.719		
Class A					Elbow to Pipe				
B09.011.042A	2NC26-3		CN-2NC-26	NDE-600	UT	SS	6.000	Component	Depending on the examiners qualifications, Procedure PDI-UT-2 may be used in lieu of NDE-600. If PDI-UT-2 is used, Calibration Block PDI-UT-2-C may be used.
	Circumferential	NC	CN-ISIN3-2553-1.0			160	0.719		
Class A					Elbow to Pipe				
B09.011.043	2NC26-4		CN-2NC-26	NDE-600	UT	SS	6.000	Component	Depending on the examiners qualifications, Procedure PDI-UT-2 may be used in lieu of NDE-600. If PDI-UT-2 is used, Calibration Block PDI-UT-2-C may be used.
	Circumferential	NC	CN-ISIN3-2553-1.0			160	0.719		
Class A					Pipe to Elbow				
B09.011.043A	2NC26-4		CN-2NC-26	NDE-35	PT	SS	6.000		
	Circumferential	NC	CN-ISIN3-2553-1.0			160	0.719		
Class A					Pipe to Elbow				
B09.011.046	2NC33-14		CN-2NC-33	NDE-600	UT	SS	4.000	Component	Depending on the examiners qualifications, Procedure PDI-UT-2 may be used in lieu of NDE-600. If PDI-UT-2 is used, Calibration Block PDI-UT-2-C may be used.
	Circumferential	NC	CN-ISIN3-2553-1.1			160	0.513		
Class A					Elbow to Pipe				
B09.011.046A	2NC33-14		CN-2NC-33	NDE-35	PT	SS	4.000		
	Circumferential	NC	CN-ISIN3-2553-1.1			160	0.513		
Class A					Elbow to Pipe				
B09.011.048	2NC33-2		CN-2NC-33	NDE-600	UT	SS	4.000	Component	Depending on the examiners qualifications, Procedure PDI-UT-2 may be used in lieu of NDE-600. If PDI-UT-2 is used, Calibration Block PDI-UT-2-C may be used.
	Circumferential	NC	CN-ISIN3-2553-1.1			160	0.531		
Class A					Pipe to Elbow				
B09.011.048A	2NC33-2		CN-2NC-33	NDE-35	PT	SS	4.000		
	Circumferential	NC	CN-ISIN3-2553-1.1			160	0.531		
Class A					Pipe to Elbow				

CATEGORY B-J, Pressure Retaining Welds In Piping

Less Than NPS 4

ITEM NUMBER	ID NUMBER	SYS	ISO/DWG NUMBERS	PROC	INSP REQ	MAT/SCH	DIA/THK	CAL BLOCKS	COMMENTS
B09.011.049 Class A	2NC42-11 Circumferential	NC	CN-2NC-42 CN-ISIN3-2553-1.0	NDE-600	UT Tee to Elbow	SS 140	12.000 1.125	Component	Depending on the examiners qualifications, Procedure PDI-UT-2 may be used in lieu of NDE-600. If PDI-UT-2 is used, Calibration Block PDI-UT-2-C may be used.
B09.011.049A Class A	2NC42-11 Circumferential	NC	CN-2NC-42 CN-ISIN3-2553-1.0	NDE-35	PT Tee to Elbow	SS 140	12.000 1.125		
B09.011.050 Class A	2NC42-12 Circumferential	NC	CN-2NC-42 CN-ISIN3-2553-1.0	NDE-600	UT Elbow to Pipe	SS 140	12.000 1.125	Component	Depending on the examiners qualifications, Procedure PDI-UT-2 may be used in lieu of NDE-600. If PDI-UT-2 is used, Calibration Block PDI-UT-2-C may be used.
B09.011.050A Class A	2NC42-12 Circumferential	NC	CN-2NC-42 CN-ISIN3-2553-1.0	NDE-35	PT Elbow to Pipe	SS 140	12.000 1.125		
B09.011.105 Class A	2ND67-11 Circumferential	ND	CN-2ND-67 CN-ISIN3-2561-1.0	NDE-600	UT Elbow to Pipe	SS 140	12.000 1.125	Component	Depending on the examiners qualifications, Procedure PDI-UT-2 may be used in lieu of NDE-600. If PDI-UT-2 is used, Calibration Block PDI-UT-2-C may be used.
B09.011.105A Class A	2ND67-11 Circumferential	ND	CN-2ND-67 CN-ISIN3-2561-1.0	NDE-35	PT Elbow to Pipe	SS 140	12.000 1.125		
B09.011.106 Class A	2ND67-8 Circumferential	ND	CN-2ND-67 CN-ISIN3-2561-1.0	NDE-600	UT Pipe to Elbow	SS 140	12.000 1.125	Component	Depending on the examiners qualifications, Procedure PDI-UT-2 may be used in lieu of NDE-600. If PDI-UT-2 is used, Calibration Block PDI-UT-2-C may be used.
B09.011.106A Class A	2ND67-8 Circumferential	ND	CN-2ND-67 CN-ISIN3-2561-1.0	NDE-35	PT Pipe to Elbow	SS 140	12.000 1.125		
B09.011.107 Class A	2ND67-9 Circumferential	ND	CN-2ND-67 CN-ISIN3-2561-1.0	NDE-600	UT Elbow to Pipe	SS 140	12.000 1.125	Component	Depending on the examiners qualifications, Procedure PDI-UT-2 may be used in lieu of NDE-600. If PDI-UT-2 is used, Calibration Block PDI-UT-2-C may be used.

CATEGORY B-J, Pressure Retaining Welds In Piping

Less Than NPS 4

ITEM NUMBER	ID NUMBER	SYS	ISO/DWG NUMBERS	PROC	INSP REQ	MAT/SCH	DIA/THK	CAL BLOCKS	COMMENTS
B09.011.107A	2ND67-9		CN-2ND-67	NDE-35	PT	SS	12.000		
	Circumferential	ND	CN-ISIN3-2561-1.0			140	1.125		
Class A					Elbow to Pipe				
B09.011.177	2NI63-3		CN-2NI-63	NDE-600	UT	SS	10.000	Component	Depending on the examiners qualifications, Procedure PDI-UT-2 may be used in lieu of NDE-600. If PDI-UT-2 is used, Calibration Block PDI-UT-2-C may be used.
	Circumferential	NI	CN-ISIN3-2562-1.1			140	1.000		
Class A					Pipe to Elbow				
B09.011.177A	2NI63-3		CN-2NI-63	NDE-35	PT	SS	10.000		
	Circumferential	NI	CN-ISIN3-2562-1.1			140	1.000		
Class A					Pipe to Elbow				
B09.011.178	2NI63-5		CN-2NI-63	NDE-600	UT	SS	10.000	Component	Depending on the examiners qualifications, Procedure PDI-UT-2 may be used in lieu of NDE-600. If PDI-UT-2 is used, Calibration Block PDI-UT-2-C may be used.
	Circumferential	NI	CN-ISIN3-2562-1.1			140	1.000		
Class A					Pipe to Elbow				
B09.011.178A	2NI63-5		CN-2NI-63	NDE-35	PT	SS	10.000		
	Circumferential	NI	CN-ISIN3-2562-1.1			140	1.000		
Class A					Pipe to Elbow				
B09.011.179	2NI70-1		CN-2NI-70	NDE-600	UT	SS	6.000	Component	Depending on the examiners qualifications, Procedure PDI-UT-2 may be used in lieu of NDE-600. If PDI-UT-2 is used, Calibration Block PDI-UT-2-C may be used.
	Circumferential	NI	CN-ISIN3-2562-1.3			160	0.719		
Class A					Elbow to Pipe				
B09.011.179A	2NI70-1		CN-2NI-70	NDE-35	PT	SS	6.000		
	Circumferential	NI	CN-ISIN3-2562-1.3			160	0.719		
Class A					Elbow to Pipe				
B09.011.180	2NI70-4		CN-2NI-70	NDE-600	UT	SS	6.000	Component	Depending on the examiners qualifications, Procedure PDI-UT-2 may be used in lieu of NDE-600. If PDI-UT-2 is used, Calibration Block PDI-UT-2-C may be used.
	Circumferential	NI	CN-ISIN3-2562-1.3			160	0.719		
Class A					Valve 2NI175 to Pipe				
B09.011.180A	2NI70-4		CN-2NI-70	NDE-35	PT	SS	6.000		
	Circumferential	NI	CN-ISIN3-2562-1.3			160	0.719		
Class A					Valve 2NI175 to Pipe				

CATEGORY B-J, Pressure Retaining Welds In Piping

Less Than NPS 4

ITEM NUMBER	ID NUMBER	SYS	ISO/DWG NUMBERS	PROC	INSP REQ	MAT/SCH	DIA/THK	CAL BLOCKS	COMMENTS
B09.011.185	2NI75-6		CN-2NI-75	NDE-600	UT	SS	6.000	Component	Depending on the examiners qualifications, Procedure PDI-UT-2 may be used in lieu of NDE-600. If PDI-UT-2 is used, Calibration Block PDI-UT-2-C may be used.
	Circumferential	NI	CN-ISIN3-2562-1.3			160	0.719		
Class A					Pipe to Elbow				
B09.011.185A	2NI75-6		CN-2NI-75	NDE-35	PT	SS	6.000		
	Circumferential	NI	CN-ISIN3-2562-1.3			160	0.719		
Class A					Pipe to Elbow				
B09.011.186	2NI75-8		CN-2NI-75	NDE-600	UT	SS	6.000	Component	Depending on the examiners qualifications, Procedure PDI-UT-2 may be used in lieu of NDE-600. If PDI-UT-2 is used, Calibration Block PDI-UT-2-C may be used.
	Circumferential	NI	CN-ISIN3-2562-1.3			160	0.719		
Class A					Elbow to Pipe				
B09.011.186A	2NI75-8		CN-2NI-75	NDE-35	PT	SS	6.000		
	Circumferential	NI	CN-ISIN3-2562-1.3			160	0.719		
Class A					Elbow to Pipe				

Total B09.011 Items: 30

CATEGORY B-J, Pressure Retaining Welds In Piping

Branch Pipe Connection Welds

DUKE ENERGY CORPORATION
INSERVICE INSPECTION PLAN MANAGEMENT
Inservice Inspection Database Management System
Catawba 2
Inservice Inspection Plan for Interval 3 Outage 3

ITEM NUMBER	ID NUMBER	SYS	ISO/DWG NUMBERS	PROC	INSP REQ	MAT/SCH	DIA/THK	CAL BLOCKS	COMMENTS
B09.021.101	2NV119-1		CN-2NV-119	NDE-35	PT	SS	3.000		
	Circumferential	NV	CN-ISIN3-2554-1.0			160	0.438		
Class A	Stress weld				Valve 2NV040 to Pipe				
B09.021.102	2NV119-2		CN-2NV-119	NDE-35	PT	SS	3.000		
	Circumferential	NV	CN-ISIN3-2554-1.0			160	0.438		
Class A	Stress weld				Pipe to Valve 2NV041				
B09.021.105	2NV209-RCP2A-1		CN-2NV-209	NDE-35	PT	SS	1.500		Pipe to RCP2A Weld Neck Flange.
	Circumferential	NV	CNM 1201.01-151			80	0.200		
Class A					Pipe to Flange				

Total B09.021 Items: 3

CATEGORY B-J, Pressure Retaining Welds In Piping

Pressure Vessels

ITEM NUMBER	ID NUMBER	SYS	ISO/DWG NUMBERS	PROC	INSP REQ	MAT/SCH	DIA/THK	CAL BLOCKS	COMMENTS
**** Welded Attachments ****									
B09.040.101	2NV111-4		CN-2NV-111	NDE-35	PT	SS	2.000		
	Socket	NV	CN-ISIN3-2554-1.0			160	0.344		
Class A					Pipe to Elbow				
B09.040.102	2NV111-6		CN-2NV-111	NDE-35	PT	SS	2.000		
	Socket	NV	CN-ISIN3-2554-1.0			160	0.344		
Class A					Pipe to Tee				
B09.040.105	2NV209-10		CN-2NV-209	NDE-35	PT	SS	2.000		
	Socket	NV	CN-ISIN3-2554-1.5			160	0.344		
Class A					Pipe to Half Coupling				
B09.040.106	2NV209-19		CN-2NV-209	NDE-35	PT	SS	2.000		
	Socket	NV	CN-ISIN3-2554-1.5			160	0.344		
Class A					Elbow to Pipe				
B09.040.107	2NV209-2		CN-2NV-209	NDE-35	PT	SS	2.000		
	Socket	NV	CN-ISIN3-2554-1.5			160	0.344		
Class A					Pipe to Valve 2NV049				
B09.040.108	2NV209-27		CN-2NV-209	NDE-35	PT	SS	1.500		
	Socket	NV	CN-ISIN3-2554-1.5			160	0.281		
Class A					Reducing Insert to Pipe				
B09.040.109	2NV209-28		CN-2NV-209	NDE-35	PT	SS	2.000		
	Socket	NV	CN-ISIN3-2554-1.5			160	0.344		
Class A					Pipe to Flange				
B09.040.110	2NV209-3		CN-2NV-209	NDE-35	PT	SS	2.000		
	Socket	NV	CN-ISIN3-2554-1.5			160	0.344		
Class A					Valve 2NV209 to Pipe				

CATEGORY B-J, Pressure Retaining Welds In Piping

Pressure Vessels

DUKE ENERGY CORPORATION
INSERVICE INSPECTION PLAN MANAGEMENT
Inservice Inspection Database Management System

Catawba 2

Inservice Inspection Plan for Interval 3 Outage 3

ITEM NUMBER	ID NUMBER	SYS	ISO/DWG NUMBERS	PROC	INSP REQ	MAT/SCH	DIA/THK	CAL BLOCKS	COMMENTS
B09.040.111	2NV209-32		CN-2NV-209	NDE-35	PT	SS	2.000		
	Socket	NV	CN-ISIN3-2554-1.5			160	0.344		
Class A					Tee to Pipe				
B09.040.112	2NV222-15		CN-2NV-222	NDE-35	PT	SS	2.000		
	Socket	NV	CN-ISIN3-2554-1.5			160	0.344		
Class A					Pipe to Elbow				
B09.040.113	2NV222-17		CN-2NV-222	NDE-35	PT	SS	2.000		
	Socket	NV	CN-ISIN3-2554-1.5			160	0.344		
Class A					Pipe to Flange				
B09.040.114	2NV222-24		CN-2NV-222	NDE-35	PT	SS	2.000		
	Socket	NV	CN-ISIN3-2554-1.5			160	0.344		
Class A					Tee to Pipe				
B09.040.115	2NV222-26		CN-2NV-222	NDE-35	PT	SS	2.000		
	Socket	NV	CN-ISIN3-2554-1.5			160	0.344		
Class A					Pipe to Tee				
B09.040.116	2NV222-8		CN-2NV-222	NDE-35	PT	SS	2.000		
	Socket	NV	CN-ISIN3-2554-1.5			160	0.344		
Class A					Elbow to Pipe				
B09.040.137	2NVRCP2A-1		CNM 1201.01-115	NDE-35	PT	SS	1.500		Vendor Weld. Pipe to RCP2A Thermal Barrier Flange.
	Socket	NV	CNM 1201.01-151			80	0.200		
Class A					Pipe to Flange				

Total B09.040 Items: 15

Total B09 Items: 48

CATEGORY B-K, Welded Attachments For Vessels, Piping, Pumps, And Valves

Piping

DUKE ENERGY CORPORATION
INSERVICE INSPECTION PLAN MANAGEMENT
Inservice Inspection Database Management System
Catawba 2
Inservice Inspection Plan for Interval 3 Outage 3

ITEM NUMBER	ID NUMBER	SYS	ISO/DWG NUMBERS	PROC	INSP REQ	MAT/SCH	DIA/THK	CAL BLOCKS	COMMENTS
****** Welded Attachments ******									
B10.010.003	2PZR-W10B		CNM 2201.01-110/1	NDE-25	MT	CS	4.000		Pressurizer Seismic Lug To Shell (Welded Attachment). X-Y Quadrant.
		NC	CN-ISIN3-2553-1.1				4.000		
Class A			CNM 2201.01-110/2		Seismic Lug to Shell				

Total B10.010 Items: 1

Total B10 Items: 1

CATEGORY B-L-2, Pump Casings

Valves

ITEM NUMBER	ID NUMBER	SYS	ISO/DWG NUMBERS	PROC	INSP REQ	MAT/SCH	DIA/THK	CAL BLOCKS	COMMENTS
****** Valves, Less Than NPS 4; Valve Body Welds ******									
B12.020.001	2RCP-2A		CN-2NC-9	QAL-14	VT-3	SS	77.000		Reactor Coolant Pump 2A Casing Internal Surfaces. Only One Pump Required To Be Examined Per Interval. Inspect Only If Pump Is Disassembled For Maintenance, Repair, Or Volumetric Examination.
Class A		NC	CNM-1201.01-115				4.500		
B12.020.002	2RCP-2B		CN-2NC-11	QAL-14	VT-3	SS	77.000		Reactor Coolant Pump 2B Casing Internal Surfaces. Only One Pump Required To Be Examined Per Interval. Inspect Only If Pump Is Disassembled For Maintenance, Repair, Or Volumetric Examination.
Class A		NC	CNM-1201.01-115				4.500		
B12.020.003	2RCP-2C		CN-2NC-13	QAL-14	VT-3	SS	77.000		Reactor Coolant Pump 2C Casing Internal Surfaces. Only One Pump Required To Be Examined Per Interval. Inspect Only If Pump Is Disassembled For Maintenance, Repair, Or Volumetric Examination.
Class A		NC	CNM-1201.01-115				4.500		
B12.020.004	2RCP-2D		CN-2NC-15	QAL-14	VT-3	SS	77.000		Reactor Coolant Pump 2D Casing Internal Surfaces. Only One Pump Required To Be Examined Per Interval. Inspect Only If Pump Is Disassembled For Maintenance, Repair, Or Volumetric Examination.
Class A		NC	CNM-1201.01-115				4.500		

Total B12.020 Items: 4

CATEGORY B-M-2, Valve Body

Reactor Vessel

ITEM NUMBER	ID NUMBER	SYS	ISO/DWG NUMBERS	PROC	INSP REQ	MAT/SCH	DIA/THK	CAL BLOCKS	COMMENTS
**** Vessel Interior ****									
B12.050.001A Class A	2NC-1	NC	CN-2NC-112 CNM-1205.09-01	QAL-14	VT-3	SS 160	6.000 0.719		6" Relief Valve. Inspect One Of The Following Valves: 2NC-1, 2NC-2, Or 2NC-3. Inspect Only If Disassembled For Maintenance. Repair. Or Volumetric Examination.
B12.050.001B Class A	2NC-2	NC	CN-2NC-119 CNM-1205.09-01	QAL-14	VT-3	SS 160	6.000 0.719		6" Relief Valve. Inspect One Of The Following Valves: 2NC-1, 2NC-2, Or 2NC-3. Inspect Only If Disassembled For Maintenance, Repair, Or Volumetric Examination.
B12.050.001C Class A	2NC-3	NC	CN-2NC-163 CNM-1205.09-01	QAL-14	VT-3	SS 160	6.000 0.719		6" Relief Valve. Inspect One Of The Following Valves: 2NC-1, 2NC-2, Or 2NC-3. Inspect Only If Disassembled For Maintenance, Repair, Or Volumetric Examination.
B12.050.002A Class A	2NC-27	NC	CN-2NC-24 CNM-1205.06-41	QAL-14	VT-3	SS 160	6.000 0.719		6" Fisher Control Valve. Inspect One Of The Following Valves: 2NC-27, Or 2NC-29. Inspect Only If Disassembled For Maintenance, Repair, Or Volumetric Examination.
B12.050.002B Class A	2NC-29	NC	CN-2NC-33 CNM-1205.06-41	QAL-14	VT-3	SS 160	6.000 0.719		6" Fisher Control Valve. Inspect One Of The Following Valves: 2NC-27, Or 2NC-29. Inspect Only If Disassembled For Maintenance, Repair, Or Volumetric Examination.
B12.050.003A Class A	2ND-36B	ND	CN-2ND-66 CNM-1205.00-262	QAL-14	VT-3	SS 140	12.000 2.043		12" Borg Warner Gate Valve. Inspect One Of The Following Valves: 2ND-1B, 2ND-2A, 2ND-36B, Or 2ND-37A. Inspect Only If Disassembled For Maintenance, Repair, Or Volumetric Examination.
B12.050.003B Class A	2ND-37A	ND	CN-2ND-66 CNM-1205.00-262	QAL-14	VT-3	SS 140	12.000 2.043		12" Borg Warner Gate Valve. Inspect One Of The Following Valves: 2ND-1B, 2ND-2A, 2ND-36B, Or 2ND-37A. Inspect Only If Disassembled For Maintenance, Repair, Or Volumetric Examination.
B12.050.003C Class A	2ND-1B	ND	CN-2ND-67 CNM-1205.00-262	QAL-14	VT-3	SS 140	12.000 2.043		12" Borg Warner Gate Valve. Inspect One Of The Following Valves: 2ND-1B, 2ND-2A, 2ND-36B, Or 2ND-37A. Inspect Only If Disassembled For Maintenance, Repair, Or Volumetric Examination.

CATEGORY B-M-2, Valve Body

Reactor Vessel

Catawba 2
Inservice Inspection Plan for Interval 3 Outage 3

ITEM NUMBER	ID NUMBER	SYS	ISO/DWG NUMBERS	PROC	INSP REQ	MAT/SCH	DIA/THK	CAL BLOCKS	COMMENTS
B12.050.003D Class A	2ND-2A	ND	CN-2ND-67 CNM-1205.00-262	QAL-14	VT-3	SS 140	12.000 2.043		12" Borg Warner Gate Valve. Inspect One Of The Following Valves: 2ND-1B, 2ND-2A, 2ND-36B, Or 2ND-37A. Inspect Only If Disassembled For Maintenance, Repair, Or Volumetric Examination.
B12.050.004A Class A	2NI-126	NI	CN-2NI-379 CNM-1205.00-63	QAL-14	VT-3	SS 160	6.000 0.719		6" Westinghouse Check Valve. Inspect One Of The Following Valves: 2NI-126, 2NI-134, 2NI-157, 2NI-160, 2NI-175, 2NI-176, 2NI-180, Or 2NI-181. Inspect Only If Disassembled For Maintenance, Repair, Or Volumetric Examination.
B12.050.004B Class A	2NI-134	NI	CN-2NI-91 CNM-1205.00-63	QAL-14	VT-3	SS 160	6.000 0.719		6" Westinghouse Check Valve. Inspect One Of The Following Valves: 2NI-126, 2NI-134, 2NI-157, 2NI-160, 2NI-175, 2NI-176, 2NI-180, Or 2NI-181. Inspect Only If Disassembled For Maintenance, Repair, Or Volumetric Examination.
B12.050.004C Class A	2NI-157	NI	CN-2NI-398 CNM-1205.00-63	QAL-14	VT-3	SS 160	6.000 0.719		6" Westinghouse Check Valve. Inspect One Of The Following Valves: 2NI-126, 2NI-134, 2NI-157, 2NI-160, 2NI-175, 2NI-176, 2NI-180, Or 2NI-181. Inspect Only If Disassembled For Maintenance, Repair, Or Volumetric Examination.
B12.050.004D Class A	2NI-160	NI	CN-2NI-396 CNM-1205.00-63	QAL-14	VT-3	SS 160	6.000 0.719		6" Westinghouse Check Valve. Inspect One Of The Following Valves: 2NI-126, 2NI-134, 2NI-157, 2NI-160, 2NI-175, 2NI-176, 2NI-180, Or 2NI-181. Inspect Only If Disassembled For Maintenance, Repair, Or Volumetric Examination.
B12.050.004E Class A	2NI-175	NI	CN-2NI-70 CNM-1205.00-63	QAL-14	VT-3	SS 160	6.000 0.719		6" Westinghouse Check Valve. Inspect One Of The Following Valves: 2NI-126, 2NI-134, 2NI-157, 2NI-160, 2NI-175, 2NI-176, 2NI-180, Or 2NI-181. Inspect Only If Disassembled For Maintenance, Repair, Or Volumetric Examination.
B12.050.004F Class A	2NI-176	NI	CN-2NI-77 CNM-1205.00-63	QAL-14	VT-3	SS 160	6.000 0.719		6" Westinghouse Check Valve. Inspect One Of The Following Valves: 2NI-126, 2NI-134, 2NI-157, 2NI-160, 2NI-175, 2NI-176, 2NI-180, Or 2NI-181. Inspect Only If Disassembled For Maintenance, Repair, Or Volumetric Examination.

Reactor Vessel

Catawba 2

Inservice Inspection Plan for Interval 3 Outage 3

ITEM NUMBER	ID NUMBER	SYS	ISO/DWG NUMBERS	PROC	INSP REQ	MAT/SCH	DIA/THK	CAL BLOCKS	COMMENTS
B12.050.004G	2NI-180		CN-2NI-145	QAL-14	VT-3	SS	6.000		6" Westinghouse Check Valve. Inspect One Of The Following Valves: 2NI-126, 2NI-134, 2NI-157, 2NI-160, 2NI-175, 2NI-176, 2NI-180, Or 2NI-181. Inspect Only If Disassembled For Maintenance, Repair, Or Volumetric Examination.
Class A		NI	CNM-1205.00-63			160	0.719		
B12.050.004H	2NI-181		CN-2NI-75	QAL-14	VT-3	SS	6.000		6" Westinghouse Check Valve. Inspect One Of The Following Valves: 2NI-126, 2NI-134, 2NI-157, 2NI-160, 2NI-175, 2NI-176, 2NI-180, Or 2NI-181. Inspect Only If Disassembled For Maintenance, Repair, Or Volumetric Examination.
Class A		NI	CNM-1205.00-63			160	0.719		
B12.050.005A	2NI-54A		CN-2NI-59	QAL-14	VT-3	SS	10.000		10" Westinghouse Gate Valve. Inspect One Of The Following Valves: 2NI-54A, 2NI-65B, 2NI-76A, Or 2NI-88B. Inspect Only If Disassembled For Maintenance, Repair, Or Volumetric Examination.
Class A		NI	CNM-1205.00-71			140	1.000		
B12.050.005B	2NI-65B		CN-2NI-61	QAL-14	VT-3	SS	10.000		10" Westinghouse Gate Valve. Inspect One Of The Following Valves: 2NI-54A, 2NI-65B, 2NI-76A, Or 2NI-88B. Inspect Only If Disassembled For Maintenance, Repair, Or Volumetric Examination.
Class A		NI	CNM-1205.00-71			140	1.000		
B12.050.005C	2NI-76A		CN-2NI-63	QAL-14	VT-3	SS	10.000		10" Westinghouse Gate Valve. Inspect One Of The Following Valves: 2NI-54A, 2NI-65B, 2NI-76A, Or 2NI-88B. Inspect Only If Disassembled For Maintenance, Repair, Or Volumetric Examination.
Class A		NI	CNM-1205.00-71			140	1.000		
B12.050.005D	2NI-88B		CN-2NI-57	QAL-14	VT-3	SS	10.000		10" Westinghouse Gate Valve. Inspect One Of The Following Valves: 2NI-54A, 2NI-65B, 2NI-76A, Or 2NI-88B. Inspect Only If Disassembled For Maintenance, Repair, Or Volumetric Examination.
Class A		NI	CNM-1205.00-71			140	1.000		
B12.050.006A	2NI-59		CN-2NI-184	QAL-14	VT-3	SS	10.000		10" Westinghouse Check Valve. Inspect One Of The Following Valves: 2NI-59, 2NI-60, 2NI-70, 2NI-71, 2NI-81, 2NI-82, 2NI-93, Or 2NI-94. Inspect Only If Disassembled For Maintenance, Repair, Or Volumetric Examination.
Class A		NI	CNM-1205.00-62			140	1.000		
B12.050.006B	2NI-60		CN-2NI-184	QAL-14	VT-3	SS	10.000		10" Westinghouse Check Valve. Inspect One Of The Following Valves: 2NI-59, 2NI-60, 2NI-70, 2NI-71, 2NI-81, 2NI-82, 2NI-93, Or 2NI-94. Inspect Only If Disassembled For Maintenance, Repair, Or Volumetric Examination.
Class A		NI	CNM-1205.00-62			140	1.000		

CATEGORY B-M-2, Valve Body

Reactor Vessel

ITEM NUMBER	ID NUMBER	SYS	ISO/DWG NUMBERS	PROC	INSP REQ	MAT/SCH	DIA/THK	CAL BLOCKS	COMMENTS
B12.050.006C Class A	2NI-70	NI	CN-2NI-185 CNM-1205.00-62	QAL-14	VT-3	SS 140	10.000 1.000		10" Westinghouse Check Valve. Inspect One Of The Following Valves: 2NI-59, 2NI-60, 2NI-70, 2NI-71, 2NI-81, 2NI-82, 2NI-93, Or 2NI-94. Inspect Only If Disassembled For Maintenance, Repair, Or Volumetric Examination.
B12.050.006D Class A	2NI-71	NI	CN-2NI-185 CNM-1205.00-62	QAL-14	VT-3	SS 140	10.000 1.000		10" Westinghouse Check Valve. Inspect One Of The Following Valves: 2NI-59, 2NI-60, 2NI-70, 2NI-71, 2NI-81, 2NI-82, 2NI-93, Or 2NI-94. Inspect Only If Disassembled For Maintenance, Repair, Or Volumetric Examination.
B12.050.006E Class A	2NI-81	NI	CN-2NI-55 CNM-1205.00-62	QAL-14	VT-3	SS 140	10.000 1.000		10" Westinghouse Check Valve. Inspect One Of The Following Valves: 2NI-59, 2NI-60, 2NI-70, 2NI-71, 2NI-81, 2NI-82, 2NI-93, Or 2NI-94. Inspect Only If Disassembled For Maintenance, Repair, Or Volumetric Examination.
B12.050.006F Class A	2NI-82	NI	CN-2NI-55 CNM-1205.00-62	QAL-14	VT-3	SS 140	10.000 1.000		10" Westinghouse Check Valve. Inspect One Of The Following Valves: 2NI-59, 2NI-60, 2NI-70, 2NI-71, 2NI-81, 2NI-82, 2NI-93, Or 2NI-94. Inspect Only If Disassembled For Maintenance, Repair, Or Volumetric Examination.
B12.050.006G Class A	2NI-93	NI	CN-2NI-183 CNM-1205.00-62	QAL-14	VT-3	SS 140	10.000 1.000		10" Westinghouse Check Valve. Inspect One Of The Following Valves: 2NI-59, 2NI-60, 2NI-70, 2NI-71, 2NI-81, 2NI-82, 2NI-93, Or 2NI-94. Inspect Only If Disassembled For Maintenance, Repair, Or Volumetric Examination.
B12.050.006H Class A	2NI-94	NI	CN-2NI-183 CNM-1205.00-62	QAL-14	VT-3	SS 140	10.000 1.000		10" Westinghouse Check Valve. Inspect One Of The Following Valves: 2NI-59, 2NI-60, 2NI-70, 2NI-71, 2NI-81, 2NI-82, 2NI-93, Or 2NI-94. Inspect Only If Disassembled For Maintenance, Repair, Or Volumetric Examination.
B12.050.007A Class A	2NI-125	NI	CN-2NI-94 CNM-1205.00-59	QAL-14	VT-3	SS 160	8.000 0.906		8" Westinghouse Check Valve. Inspect One Of The Following Valves: 2NI-125 Or 2N1-129. Inspect Only If Disassembled For Maintenance, Repair, Or Volumetric Examination.

CATEGORY B-M-2, Valve Body

Reactor Vessel

Catawba 2
Inservice Inspection Plan for Interval 3 Outage 3

ITEM NUMBER	ID NUMBER	SYS	ISO/DWG NUMBERS	PROC	INSP REQ	MAT/SCH	DIA/THK	CAL BLOCKS	COMMENTS
B12.050.007B	2NI-129		CN-2NI-92	QAL-14	VT-3	SS	8.000		8" Westinghouse Check Valve. Inspect One Of The Following Valves: 2NI-125 Or 2N1-129. Inspect Only If Disassembled For Maintenance, Repair, Or Volumetric Examination.
		NI	CNM-1205.00-59			160	0.906		
Class A									

Total B12.050 Items:	**31**
Total B12 Items:	**35**

CATEGORY B-N-1, Interior Of Reactor Vessel

DUKE ENERGY CORPORATION
INSERVICE INSPECTION PLAN MANAGEMENT
Inservice Inspection Database Management System

Reactor Vessel (PWR)

Catawba 2
Inservice Inspection Plan for Interval 3 Outage 3

ITEM NUMBER	ID NUMBER	SYS	ISO/DWG NUMBERS	PROC	INSP REQ	MAT/SCH	DIA/THK	CAL BLOCKS	COMMENTS
**** Interior Attachments Within Beltline Region ****									
B13.010.001	2RPV-INTERIOR		CNM 2201.01-51	QAL-14	VT-3	SS	0.000		Reactor Vessel Interior. Areas To Be Examined Shall Include The Spaces Above And Below The Reactor Core That Are Accessible For Examination By Removal Of Components During Normal Refueling Outages. Inspect Each Inspection Period.
		NC	CNM 2201.01-67				0.000		
Class A			CNM 2201.01-0205						

Total B13.010 Items: 1

Total B13 Items: 1

CATEGORY C-A, Pressure Retaining Welds In Pressure Vessels

Head Circumferential Welds

ITEM NUMBER	ID NUMBER	SYS	ISO/DWG NUMBERS	PROC	INSP REQ	MAT/SCH	DIA/THK	CAL BLOCKS	COMMENTS
C01.010.001	2SGB-03-04A		CN-ISIN3-2553-1.0	NDE-640	UT	CS	0.000	50366	Steam Generator 2B Stub Barrel Pc.3 To Lower Shell Pc.4A.
	Circumferential	NC	CNM 2201.01-102	NDE-820			3.060		
Class B			CNM 2201.01-106		Stub Barrel to Lower Shell				
C01.010.002	2SGC-04B-05		CN-ISIN3-2553-1.0	NDE-640	UT	CS	0.000	50366	Steam Generator 2C Lower Shell Pc.4B To Transition Cone Pc.5.
	Circumferential	NC	CNM 2201.01-105	NDE-820			3.060		
Class B					Lower Shell to Transition Cone				
C01.010.003	2SGD-05-06A		CN-ISIN3-2553-1.0	NDE-640	UT	CS	0.000	50366	Steam Generator 2D Transition Cone Pc.5 To Upper Shell Pc.6A.
	Circumferential	NC	CNM 2201.01-114	NDE-820			4.000		
Class B					Transition Cone to Upper Shell				

Total C01.010 Items: 3

CATEGORY C-A, Pressure Retaining Welds In Pressure Vessels

Tubesheet-to-Shell Weld

DUKE ENERGY CORPORATION
INSERVICE INSPECTION PLAN MANAGEMENT
Inservice Inspection Database Management System
Catawba 2
Inservice Inspection Plan for Interval 3 Outage 3

ITEM NUMBER	ID NUMBER	SYS	ISO/DWG NUMBERS	PROC	INSP REQ	MAT/SCH	DIA/THK	CAL BLOCKS	COMMENTS
C01.020.001	2SGD-06B-07		CN-ISIN3-2553-1.0	NDE-620	UT	CS	0.000	50366	Steam Generator 2D Upper Shell Pc.6B To Upper Head Pc.7. Depending upon the examiner's qualifications, Procedure PDI-UT-6 may be used in lieu of Procedure NDE-620.
	Circumferential	NC	CNM 2201.01-114				3.890	50236A	
Class B					Upper Shell to Upper Head				

Total C01.020 Items: 1

CATEGORY C-A, Pressure Retaining Welds In Pressure Vessels

Nozzles in Vessels <= 1/2 in. Nominal Thickness

DUKE ENERGY CORPORATION
INSERVICE INSPECTION PLAN MANAGEMENT
Inservice Inspection Database Management System
Catawba 2
Inservice Inspection Plan for Interval 3 Outage 3

ITEM NUMBER	ID NUMBER	SYS	ISO/DWG NUMBERS	PROC	INSP REQ	MAT/SCH	DIA/THK	CAL BLOCKS	COMMENTS
C01.030.001	2SGA-02-03		CN-ISIN3-2553-1.0	NDE-620	UT	CS	0.000	50366	Steam Generator 2A Tubesheet Pc.2 to Stub Barrel Pc.3.
	Circumferential	NC	CNM 2201.01-113				3.310	50236A	
Class B					Tubesheet to Stub Barrell				

Total C01.030 Items: 1

Total C01 Items: 5

CATEGORY C-C, Welded Attachments For Vessels, Piping, Pumps, And Valves

Pumps

ITEM NUMBER	ID NUMBER	SYS	ISO/DWG NUMBERS	PROC	INSP REQ	MAT/SCH	DIA/THK	CAL BLOCKS	COMMENTS
****** Welded Attachments ******									
C03.020.051	2-R-NS-1219		CN-2491-NS001	NDE-35	PT	SS	8.000		Inpingement Ring must be removed
	Rigid Restraint	NS	CN-ISIN3-2563-1.0				0.750		
Class B			CN-1678-14						
C03.020.062	2-A-NV-3684		CN-2492-NV150	NDE-35	PT	SS	3.000		
	Rigid Restraint	NV	CN-ISIN3-2554-1.1				0.438		
Class B									
C03.020.072	2-R-SM-1554		CN-2491-SM003	NDE-25	MT	CS	34.000		
	Spring Hgr	SM	CN-ISIN3-2593-1.0				0.750		
Class B									

Total C03.020 Items: 3

CATEGORY C-C, Welded Attachments For Vessels, Piping, Pumps, And Valves

Valves

ITEM NUMBER	ID NUMBER	SYS	ISO/DWG NUMBERS	PROC	INSP REQ	MAT/SCH	DIA/THK	CAL BLOCKS	COMMENTS
****** Welded Attachments ******									
C03.030.001	2RHRPA-LUGS		CNM 1201.05-14	NDE-35	PT	SS	0.000		Residual Heat Removal Pump 2A Lugs to Pump Casing. (3 Support Lugs)
		ND	CN-ISIN3-2561-1.0				0.000		
Class B			CNM 1201.05-270		Lugs to Casing				

Total C03.030 Items: 1

Total C03 Items: 4

DUKE ENERGY CORPORATION
INSERVICE INSPECTION PLAN MANAGEMENT
Inservice Inspection Database Management System

CATEGORY C-F-1, Pressure Retaining Welds In Austenitic SS Or High Alloy Piping

Piping Welds > 1/5 in. Nom Wall for Piping >= NPS 2 and <= NPS 4

Catawba 2

Inservice Inspection Plan for Interval 3 Outage 3

ITEM NUMBER	ID NUMBER	SYS	ISO/DWG NUMBERS	PROC	INSP REQ	MAT/SCH	DIA/THK	CAL BLOCKS	COMMENTS
**** Piping Welds > 1/5 in. Nom Wall For Piping >= NPS 2 And <= NPS 4 ****									
C05.011.013 Class B	2CA156-30 Circumferential	CA	CN-2CA-156 CN-ISIN3-2592-1.1	NDE-600	UT Pipe to Elbow	SS 80	6.000 0.432	Component	Depending on the examiners qualifications, Procedure PDI-UT-2 may be used in lieu of NDE-600. If PDI-UT-2 is used, Calibration Block PDI-UT-2-C may be used.
C05.011.013A Class B	2CA156-30 Circumferential	CA	CN-2CA-156 CN-ISIN3-2592-1.1	NDE-35	PT Pipe to Elbow	SS 80	6.000 0.432		
C05.011.014 Class B	2CA156-31 Circumferential	CA	CN-2CA-156 CN-ISIN3-2592-1.1	NDE-600	UT Elbow to Pipe	SS 80	6.000 0.432	Component	Depending on the examiners qualifications, Procedure PDI-UT-2 may be used in lieu of NDE-600. If PDI-UT-2 is used, Calibration Block PDI-UT-2-C may be used.
C05.011.014A Class B	2CA156-31 Circumferential	CA	CN-2CA-156 CN-ISIN3-2592-1.1	NDE-35	PT Elbow to Pipe	SS 80	6.000 0.432		
C05.011.015 Class B	2CA156-32 Circumferential	CA	CN-2CA-156 CN-ISIN3-2592-1.1	NDE-600	UT Pipe to Elbow	SS 80	6.000 0.432	Component	Depending on the examiners qualifications, Procedure PDI-UT-2 may be used in lieu of NDE-600. If PDI-UT-2 is used, Calibration Block PDI-UT-2-C may be used.
C05.011.015A Class B	2CA156-32 Circumferential	CA	CN-2CA-156 CN-ISIN3-2592-1.1	NDE-35	PT Pipe to Elbow	SS 80	6.000 0.432		
C05.011.151 Class B	2ND10-8 Circumferential	ND	CN-2ND-10 CN-ISIN3-2561-1.0	NDE-600	UT Pipe to Elbow	SS STD	12.000 0.375	Component	Depending on the examiners qualifications, Procedure PDI-UT-2 may be used in lieu of NDE-600. If PDI-UT-2 is used, Calibration Block PDI-UT-2-C may be used.
C05.011.151A Class B	2ND10-8 Circumferential	ND	CN-2ND-10 CN-ISIN3-2561-1.0	NDE-35	PT Pipe to Elbow	SS STD	12.000 0.375		

DUKE ENERGY CORPORATION
INSERVICE INSPECTION PLAN MANAGEMENT
Inservice Inspection Database Management System

CATEGORY C-F-1, Pressure Retaining Welds In Austenitic SS Or High Alloy Piping

Piping Welds > 1/5 in. Nom Wall for Piping >= NPS 2 and <= NPS 4

Catawba 2
Inservice Inspection Plan for Interval 3 Outage 3

ITEM NUMBER	ID NUMBER	SYS	ISO/DWG NUMBERS	PROC	INSP REQ	MAT/SCH	DIA/THK	CAL BLOCKS	COMMENTS
C05.011.152	2ND10-9		CN-2ND-10	NDE-600	UT	SS	12.000	Component	Depending on the examiners qualifications, Procedure PDI-UT-2 may be used in lieu of NDE-600. If PDI-UT-2 is used, Calibration Block PDI-UT-2-C may be used.
	Circumferential	ND	CN-ISIN3-2561-1.0			STD	0.375		
Class B					Elbow to Pipe				
C05.011.152A	2ND10-9		CN-2ND-10	NDE-35	PT	SS	12.000		
	Circumferential	ND	CN-ISIN3-2561-1.0			STD	0.375		
Class B					Elbow to Pipe				
C05.011.153	2ND15-17		CN-2ND-15	NDE-600	UT	SS	12.000	Component	Depending on the examiners qualifications, Procedure PDI-UT-2 may be used in lieu of NDE-600. If PDI-UT-2 is used, Calibration Block PDI-UT-2-C may be used.
	Circumferential	ND	CN-ISIN3-2561-1.1			STD	0.375		
Class B					Pipe to Elbow				
C05.011.153A	2ND15-17		CN-2ND-15	NDE-35	PT	SS	12.000		
	Circumferential	ND	CN-ISIN3-2561-1.1			STD	0.375		
Class B					Pipe to Elbow				
C05.011.154	2ND15-18		CN-2ND-15	NDE-600	UT	SS	12.000	Component	Depending on the examiners qualifications, Procedure PDI-UT-2 may be used in lieu of NDE-600. If PDI-UT-2 is used, Calibration Block PDI-UT-2-C may be used.
	Circumferential	ND	CN-ISIN3-2561-1.1			STD	0.375		
Class B					Elbow to Pipe				
C05.011.154A	2ND15-18		CN-2ND-15	NDE-35	PT	SS	12.000		
	Circumferential	ND	CN-ISIN3-2561-1.1			STD	0.375		
Class B					Elbow to Pipe				
C05.011.155	2ND16-2		CN-2ND-16	NDE-600	UT	SS	12.000	Component	Depending on the examiners qualifications, Procedure PDI-UT-2 may be used in lieu of NDE-600. If PDI-UT-2 is used, Calibration Block PDI-UT-2-C may be used.
	Circumferential	ND	CN-ISIN3-2561-1.1			STD	0.375		
Class B					Elbow to Pipe				
C05.011.155A	2ND16-2		CN-2ND-16	NDE-35	PT	SS	12.000		
	Circumferential	ND	CN-ISIN3-2561-1.1			STD	0.375		
Class B					Elbow to Pipe				
C05.011.156	2ND16-3		CN-2ND-16	NDE-600	UT	SS	12.000	Component	Depending on the examiners qualifications, Procedure PDI-UT-2 may be used in lieu of NDE-600. If PDI-UT-2 is used, Calibration Block PDI-UT-2-C may be used.
	Circumferential	ND	CN-ISIN3-2561-1.1			STD	0.375		
Class B					Pipe to Elbow				

DUKE ENERGY CORPORATION
INSERVICE INSPECTION PLAN MANAGEMENT
Inservice Inspection Database Management System
Catawba 2
Inservice Inspection Plan for Interval 3 Outage 3

CATEGORY C-F-1, Pressure Retaining Welds In Austenitic SS Or High Alloy Piping

Piping Welds > 1/5 in. Nom Wall for Piping >= NPS 2 and <= NPS 4

ITEM NUMBER	ID NUMBER	SYS	ISO/DWG NUMBERS	PROC	INSP REQ	MAT/SCH	DIA/THK	CAL BLOCKS	COMMENTS
C05.011.156A	2ND16-3		CN-2ND-16	NDE-35	PT	SS	12.000		
	Circumferential	ND	CN-ISIN3-2561-1.1			STD	0.375		
Class B					Pipe to Elbow				
C05.011.157	2ND16-6		CN-2ND-16	NDE-600	UT	SS	14.000	Component	Depending on the examiners qualifications, Procedure PDI-UT-2 may be used in lieu of NDE-600. If PDI-UT-2 is used, Calibration Block PDI-UT-2-C may be used.
	Circumferential	ND	CN-ISIN3-2561-1.1			40	0.438		
Class B					14X12 Reducer to Tee				
C05.011.157A	2ND16-6		CN-2ND-16	NDE-35	PT	SS	14.000		
	Circumferential	ND	CN-ISIN3-2561-1.1			40	0.438		
Class B					14X12 Reducer to Tee				
C05.011.158	2ND16-7		CN-2ND-16	NDE-600	UT	SS	14.000	Component	Depending on the examiners qualifications, Procedure PDI-UT-2 may be used in lieu of NDE-600. If PDI-UT-2 is used, Calibration Block PDI-UT-2-C may be used.
	Circumferential	ND	CN-ISIN3-2561-1.1			40	0.438		
Class B					Tee to Pipe				
C05.011.158A	2ND16-7		CN-2ND-16	NDE-35	PT	SS	14.000		
	Circumferential	ND	CN-ISIN3-2561-1.1			40	0.438		
Class B					Tee to Pipe				
C05.011.159	2ND18-2		CN-2ND-18	NDE-600	UT	SS	14.000	Component	Depending on the examiners qualifications, Procedure PDI-UT-2 may be used in lieu of NDE-600. If PDI-UT-2 is used, Calibration Block PDI-UT-2-C may be used.
	Circumferential	ND	CN-ISIN3-2561-1.1			40	0.438		
Class B					Pipe to Elbow				
C05.011.159A	2ND18-2		CN-2ND-18	NDE-35	PT	SS	14.000		
	Circumferential	ND	CN-ISIN3-2561-1.1			40	0.438		
Class B					Pipe to Elbow				
C05.011.160	2ND18-8		CN-2ND-18	NDE-600	UT	SS	12.000	Component	Depending on the examiners qualifications, Procedure PDI-UT-2 may be used in lieu of NDE-600. If PDI-UT-2 is used, Calibration Block PDI-UT-2-C may be used.
	Circumferential	ND	CN-ISIN3-2561-1.1			STD	0.375		
Class B					Pipe to Elbow				
C05.011.160A	2ND18-8		CN-2ND-18	NDE-35	PT	SS	12.000		
	Circumferential	ND	CN-ISIN3-2561-1.1			STD	0.375		
Class B					Pipe to Elbow				

DUKE ENERGY CORPORATION
INSERVICE INSPECTION PLAN MANAGEMENT
Inservice Inspection Database Management System

CATEGORY C-F-1, Pressure Retaining Welds In Austenitic SS Or High Alloy Piping

Piping Welds > 1/5 in. Nom Wall for Piping >= NPS 2 and <= NPS 4

Catawba 2
Inservice Inspection Plan for Interval 3 Outage 3

ITEM NUMBER	ID NUMBER	SYS	ISO/DWG NUMBERS	PROC	INSP REQ	MAT/SCH	DIA/THK	CAL BLOCKS	COMMENTS
C05.011.161	2ND18-9		CN-2ND-18	NDE-600	UT	SS	12.000	Component	Depending on the examiners qualifications, Procedure PDI-UT-2 may be used in lieu of NDE-600. If PDI-UT-2 is used, Calibration Block PDI-UT-2-C may be used.
	Circumferential	ND	CN-ISIN3-2561-1.1			STD	0.375		
Class B					Elbow to Pipe				
C05.011.161A	2ND18-9		CN-2ND-18	NDE-35	PT	SS	12.000		
	Circumferential	ND	CN-ISIN3-2561-1.1			STD	0.375		
Class B					Elbow to Pipe				
C05.011.162	2ND19-13		CN-2ND-19	NDE-600	UT	SS	14.000	Component	Residual Heat Removal Pump 2B. Depending on the examiners qualifications, Procedure PDI-UT-2 may be used in lieu of NDE-600. If PDI-UT-2 is used, Calibration Block PDI-UT-2-C may be used.
	Circumferential	ND	CN-ISIN3-2561-1.1			40	0.438		
Class B	Term end				Flange to RHR Pump 2B				
C05.011.162A	2ND19-13		CN-2ND-19	NDE-35	PT	SS	14.000		Residual Heat Removal Pump 2B.
	Circumferential	ND	CN-ISIN3-2561-1.1			40	0.438		
Class B	Term end				Flange to RHR Pump 2B				
C05.011.163	2ND19-9		CN-2ND-19	NDE-600	UT	SS	14.000	Component	Depending on the examiners qualifications, Procedure PDI-UT-2 may be used in lieu of NDE-600. If PDI-UT-2 is used, Calibration Block PDI-UT-2-C may be used.
	Circumferential	ND	CN-ISIN3-2561-1.1			40	0.438		
Class B					Flange to Pipe				
C05.011.163A	2ND19-9		CN-2ND-19	NDE-35	PT	SS	14.000		
	Circumferential	ND	CN-ISIN3-2561-1.1			40	0.438		
Class B					Flange to Pipe				
C05.011.180	2ND32-1		CN-2ND-32	NDE-600	UT	SS	12.000	Component	Depending on the examiners qualifications, Procedure PDI-UT-2 may be used in lieu of NDE-600. If PDI-UT-2 is used, Calibration Block PDI-UT-2-C may be used.
	Circumferential	ND	CN-ISIN3-2561-1.0			STD	0.375		
Class B					12X4 Reducing Tee to Pipe				
C05.011.180A	2ND32-1		CN-2ND-32	NDE-35	PT	SS	12.000		
	Circumferential	ND	CN-ISIN3-2561-1.0			STD	0.375		
Class B					12X4 Reducing Tee to Pipe				
C05.011.325	2NI85-2		CN-2NI-85	NDE-600	UT	SS	6.000	Component	Depending on the examiners qualifications, Procedure PDI-UT-2 may be used in lieu of NDE-600. If PDI-UT-2 is used, Calibration Block PDI-UT-2-C may be used.
	Circumferential	NI	CN-ISIN3-2562-1.3			160	0.719		
Class B					Elbow to Pipe				

DUKE ENERGY CORPORATION
INSERVICE INSPECTION PLAN MANAGEMENT
Inservice Inspection Database Management System
Catawba 2
Inservice Inspection Plan for Interval 3 Outage 3

CATEGORY C-F-1, Pressure Retaining Welds In Austenitic SS Or High Alloy Piping

Piping Welds > 1/5 in. Nom Wall for Piping >= NPS 2 and <= NPS 4

ITEM NUMBER	ID NUMBER	SYS	ISO/DWG NUMBERS	PROC	INSP REQ	MAT/SCH	DIA/THK	CAL BLOCKS	COMMENTS
C05.011.325A	2NI85-2		CN-2NI-85	NDE-35	PT	SS	6.000		
	Circumferential	NI	CN-ISIN3-2562-1.3			160	0.719		
Class B					Elbow to Pipe				
C05.011.326	2NI85-3		CN-2NI-85	NDE-600	UT	SS	6.000	Component	Depending on the examiners qualifications, Procedure PDI-UT-2 may be used in lieu of NDE-600. If PDI-UT-2 is used, Calibration Block PDI-UT-2-C may be used.
	Circumferential	NI	CN-ISIN3-2562-1.3			160	0.719		
Class B					Pipe to Elbow				
C05.011.326A	2NI85-3		CN-2NI-85	NDE-35	PT	SS	6.000		
	Circumferential	NI	CN-ISIN3-2562-1.3			160	0.719		
Class B					Pipe to Elbow				
C05.011.327	2NI85-5		CN-2NI-85	NDE-600	UT	SS	6.000	Component	Depending on the examiners qualifications, Procedure PDI-UT-2 may be used in lieu of NDE-600. If PDI-UT-2 is used, Calibration Block PDI-UT-2-C may be used.
	Circumferential	NI	CN-ISIN3-2562-1.3			160	0.719		
Class B					Elbow to Pipe				
C05.011.327A	2NI85-5		CN-2NI-85	NDE-35	PT	SS	6.000		
	Circumferential	NI	CN-ISIN3-2562-1.3			160	0.719		
Class B					Elbow to Pipe				
C05.011.328	2NI85-6		CN-2NI-85	NDE-600	UT	SS	6.000	Component	Depending on the examiners qualifications, Procedure PDI-UT-2 may be used in lieu of NDE-600. If PDI-UT-2 is used, Calibration Block PDI-UT-2-C may be used.
	Circumferential	NI	CN-ISIN3-2562-1.3			160	0.719		
Class B					Pipe to Elbow				
C05.011.328A	2NI85-6		CN-2NI-85	NDE-35	PT	SS	6.000		
	Circumferential	NI	CN-ISIN3-2562-1.3			160	0.719		
Class B					Pipe to Elbow				
C05.011.329	2NI85-7		CN-2NI-85	NDE-600	UT	SS	6.000	Component	Depending on the examiners qualifications, Procedure PDI-UT-2 may be used in lieu of NDE-600. If PDI-UT-2 is used, Calibration Block PDI-UT-2-C may be used.
	Circumferential	NI	CN-ISIN3-2562-1.3			160	0.719		
Class B					Elbow to Pipe				
C05.011.329A	2NI85-7		CN-2NI-85	NDE-35	PT	SS	6.000		
	Circumferential	NI	CN-ISIN3-2562-1.3			160	0.719		
Class B					Elbow to Pipe				

DUKE ENERGY CORPORATION
INSERVICE INSPECTION PLAN MANAGEMENT
Inservice Inspection Database Management System

CATEGORY C-F-1, Pressure Retaining Welds In Austenitic SS Or High Alloy Piping

Piping Welds > 1/5 in. Nom Wall for Piping >= NPS 2 and <= NPS 4

Catawba 2

Inservice Inspection Plan for Interval 3 Outage 3

ITEM NUMBER	ID NUMBER	SYS	ISO/DWG NUMBERS	PROC	INSP REQ	MAT/SCH	DIA/THK	CAL BLOCKS	COMMENTS
C05.011.330	2NI85-8		CN-2NI-85	NDE-600	UT	SS	6.000	Component	Depending on the examiners qualifications, Procedure PDI-UT-2 may be used in lieu of NDE-600. If PDI-UT-2 is used, Calibration Block PDI-UT-2-C may be used.
	Circumferential	NI	CN-ISIN3-2562-1.3			160	0.719		
Class B					Pipe to Elbow				
C05.011.330A	2NI85-8		CN-2NI-85	NDE-35	PT	SS	6.000		
	Circumferential	NI	CN-ISIN3-2562-1.3			160	0.719		
Class B					Pipe to Elbow				

Total C05.011 Items: 46

CATEGORY C-F-1, Pressure Retaining Welds In Austenitic SS Or High Alloy Piping

Socket Welds

ITEM NUMBER	ID NUMBER	SYS	ISO/DWG NUMBERS	PROC	INSP REQ	MAT/SCH	DIA/THK	CAL BLOCKS	COMMENTS
C05.021.002 Class B	2CA113-36 Circumferential	CA	CN-2CA-113 CN-ISIN3-2592-1.1	NDE-600	UT Reducer to Pipe	SS-CS 80	4.000 0.337	Component	Depending on the examiners qualifications, Procedure PDI-UT-2 may be used in lieu of NDE-600. If PDI-UT-2 is used. Calibration Block PDI-UT-2-C may be used.
C05.021.002A Class B	2CA113-36 Circumferential	CA	CN-2CA-113 CN-ISIN3-2592-1.1	NDE-35	PT Reducer to Pipe	SS-CS 80	4.000 0.337		
C05.021.003 Class B	2CA113-30 Circumferential	CA	CN-2CA-113 CN-ISIN3-2592-1.1	NDE-600	UT Valve 2CA150 to Reducer	SS 160	4.000 0.531	Component	Depending on the examiners qualifications, Procedure PDI-UT-2 may be used in lieu of NDE-600. If PDI-UT-2 is used, Calibration Block PDI-UT-2-C may be used.
C05.021.003A Class B	2CA113-30 Circumferential	CA	CN-2CA-113 CN-ISIN3-2592-1.1	NDE-35	PT Valve 2CA150 to Reducer	SS 160	4.000 0.531		
C05.021.111 Class B	2NI200-2 Circumferential	NI	CN-2NI-200 CN-ISIN3-2562-1.2	NDE-600	UT Pipe to 3X2 Reducer	SS 80	2.000 0.218	Component	Depending on the examiners qualifications, Procedure PDI-UT-2 may be used in lieu of NDE-600. If PDI-UT-2 is used, Calibration Block PDI-UT-2-C may be used.
C05.021.111A Class B	2NI200-2 Circumferential	NI	CN-2NI-200 CN-ISIN3-2562-1.2	NDE-35	PT Pipe to 3X2 Reducer	SS 80	2.000 0.218		
C05.021.112 Class B	2NI200-3 Circumferential	NI	CN-2NI-200 CN-ISIN3-2562-1.2	NDE-600	UT 3X2 Reducer to Flow Orifice	SS 160	3.000 0.300	Component	Depending on the examiners qualifications, Procedure PDI-UT-2 may be used in lieu of NDE-600. If PDI-UT-2 is used, Calibration Block PDI-UT-2-C may be used.
C05.021.112A Class B	2NI200-3 Circumferential	NI	CN-2NI-200 CN-ISIN3-2562-1.2	NDE-35	PT 3X2 Reducer to Flow Orifice	SS 160	3.000 0.300		

CATEGORY C-F-1, Pressure Retaining Welds In Austenitic SS Or High Alloy Piping

Socket Welds

Catawba 2

Inservice Inspection Plan for Interval 3 Outage 3

ITEM NUMBER	ID NUMBER	SYS	ISO/DWG NUMBERS	PROC	INSP REQ	MAT/SCH	DIA/THK	CAL BLOCKS	COMMENTS
C05.021.113 Class B	2NI23-4 Circumferential	NI	CN-2NI-23 CN-ISIN3-2562-1.2	NDE-600	UT Pipe to Elbow	SS 80	4.000 0.337	Component	Depending on the examiners qualifications, Procedure PDI-UT-2 may be used in lieu of NDE-600. If PDI-UT-2 is used, Calibration Block PDI-UT-2-C may be used.
C05.021.113A Class B	2NI23-4 Circumferential	NI	CN-2NI-23 CN-ISIN3-2562-1.2	NDE-35	PT Pipe to Elbow	SS 80	4.000 0.337		
C05.021.114 Class B	2NI23-5 Circumferential	NI	CN-2NI-23 CN-ISIN3-2562-1.2	NDE-600	UT Elbow to Pipe	SS 80	4.000 0.337	Component	Depending on the examiners qualifications, Procedure PDI-UT-2 may be used in lieu of NDE-600. If PDI-UT-2 is used, Calibration Block PDI-UT-2-C may be used.
C05.021.114A Class B	2NI23-5 Circumferential	NI	CN-2NI-23 CN-ISIN3-2562-1.2	NDE-35	PT Elbow to Pipe	SS 80	4.000 0.337		
C05.021.115 Class B	2NI24-1 Circumferential	NI	CN-2NI-24 CN-ISIN3-2562-1.2	NDE-600	UT Pipe to Elbow	SS 80	4.000 0.337	Component	Depending on the examiners qualifications, Procedure PDI-UT-2 may be used in lieu of NDE-600. If PDI-UT-2 is used, Calibration Block PDI-UT-2-C may be used.
C05.021.115A Class B	2NI24-1 Circumferential	NI	CN-2NI-24 CN-ISIN3-2562-1.2	NDE-35	PT Pipe to Elbow	SS 80	4.000 0.337		
C05.021.116 Class B	2NI24-10 Circumferential	NI	CN-2NI-24 CN-ISIN3-2562-1.2	NDE-600	UT Pipe to Elbow	SS 80	4.000 0.337	Component	Depending on the examiners qualifications, Procedure PDI-UT-2 may be used in lieu of NDE-600. If PDI-UT-2 is used, Calibration Block PDI-UT-2-C may be used.
C05.021.116A Class B	2NI24-10 Circumferential	NI	CN-2NI-24 CN-ISIN3-2562-1.2	NDE-35	PT Pipe to Elbow	SS 80	4.000 0.337		
C05.021.117 Class B	2NI24-11 Circumferential	NI	CN-2NI-24 CN-ISIN3-2562-1.2	NDE-600	UT Elbow to Pipe	SS 80	4.000 0.337	Component	Depending on the examiners qualifications, Procedure PDI-UT-2 may be used in lieu of NDE-600. If PDI-UT-2 is used, Calibration Block PDI-UT-2-C may be used.

CATEGORY C-F-1, Pressure Retaining Welds In Austenitic SS Or High Alloy Piping

Socket Welds

DUKE ENERGY CORPORATION
INSERVICE INSPECTION PLAN MANAGEMENT
Inservice Inspection Database Management System
Catawba 2
Inservice Inspection Plan for Interval 3 Outage 3

ITEM NUMBER	ID NUMBER	SYS	ISO/DWG NUMBERS	PROC	INSP REQ	MAT/SCH	DIA/THK	CAL BLOCKS	COMMENTS
C05.021.117A	2NI24-11		CN-2NI-24	NDE-35	PT	SS	4.000		
	Circumferential	NI	CN-ISIN3-2562-1.2			80	0.337		
Class B					Elbow to Pipe				
C05.021.118	2NI24-18		CN-2NI-24	NDE-600	UT	SS	4.000	Component	Depending on the examiners qualifications, Procedure PDI-UT-2 may be used in lieu of NDE-600. If PDI-UT-2 is used, Calibration Block PDI-UT-2-C may be used.
	Circumferential	NI	CN-ISIN3-2562-1.2			80	0.337		
Class B					Pipe to Elbow				
C05.021.118A	2NI24-18		CN-2NI-24	NDE-35	PT	SS	4.000		
	Circumferential	NI	CN-ISIN3-2562-1.2			80	0.337		
Class B					Pipe to Elbow				
C05.021.119	2NI255-20		CN-2NI-255	NDE-600	UT	SS	2.000	Component	Depending on the examiners qualifications, Procedure PDI-UT-2 may be used in lieu of NDE-600. If PDI-UT-2 is used, Calibration Block PDI-UT-2-C may be used.
	Circumferential	NI	CN-ISIN3-2562-1.2			80	0.218		
Class B					Pipe to 3X2 Reducer				
C05.021.119A	2NI255-20		CN-2NI-255	NDE-35	PT	SS	2.000		
	Circumferential	NI	CN-ISIN3-2562-1.2			80	0.218		
Class B					Pipe to 3X2 Reducer				
C05.021.120	2NI255-5		CN-2NI-255	NDE-600	UT	SS	3.000	Component	Depending on the examiners qualifications, Procedure PDI-UT-2 may be used in lieu of NDE-600. If PDI-UT-2 is used, Calibration Block PDI-UT-2-C may be used.
	Circumferential	NI	CN-ISIN3-2562-1.2			160	0.438		
Class B					3X2 Reducer to Flow Orifice				
C05.021.120A	2NI255-5		CN-2NI-255	NDE-35	PT	SS	3.000		
	Circumferential	NI	CN-ISIN3-2562-1.2			160	0.438		
Class B					3X2 Reducer to Flow Orifice				
C05.021.226	2NV181-1		CN-2NV-181	NDE-600	UT	SS	4.000	Component	Seal Water Heat Exchanger. Depending on the examiners qualifications, Procedure PDI-UT-2 may be used in lieu of NDE-600. If PDI-UT-2 is used, Calibration Block PDI-UT-2-C may be used.
	Circumferential	NV	CN-ISIN3-2554-1.6			40	0.237		
Class B	Term end				Nozzle to Pipe				
C05.021.226A	2NV181-1		CN-2NV-181	NDE-35	PT	SS	4.000		Seal Water Heat Exchanger.
	Circumferential	NV	CN-ISIN3-2554-1.6			40	0.237		
Class B	Term end				Nozzle to Pipe				

CATEGORY C-F-1, Pressure Retaining Welds In Austenitic SS Or High Alloy Piping

Socket Welds

ITEM NUMBER	ID NUMBER	SYS	ISO/DWG NUMBERS	PROC	INSP REQ	MAT/SCH	DIA/THK	CAL BLOCKS	COMMENTS
C05.021.227 Class B	2NV181-14 Circumferential	NV	CN-2NV-181 CN-ISIN3-2554-1.6	NDE-600	UT Pipe to Elbow	SS 40	4.000 0.237	Component	Depending on the examiners qualifications, Procedure PDI-UT-2 may be used in lieu of NDE-600. If PDI-UT-2 is used, Calibration Block PDI-UT-2-C may be used.
C05.021.227A Class B	2NV181-14 Circumferential	NV	CN-2NV-181 CN-ISIN3-2554-1.6	NDE-35	PT Pipe to Elbow	SS 40	4.000 0.237		
C05.021.228 Class B	2NV182-1 Circumferential Term end	NV	CN-2NV-182 CN-ISIN3-2554-1.6	NDE-600	UT Nozzle to Pipe	SS 40	4.000 0.237	Component	Seal Water Heat Exchanger. Depending on the examiners qualifications, Procedure PDI-UT-2 may be used in lieu of NDE-600. If PDI-UT-2 is used, Calibration Block PDI-UT-2-C may be used.
C05.021.228A Class B	2NV182-1 Circumferential Term end	NV	CN-2NV-182 CN-ISIN3-2554-1.6	NDE-35	PT Nozzle to Pipe	SS 40	4.000 0.237		Seal Water Heat Exchanger.
C05.021.229 Class B	2NV182-3 Circumferential	NV	CN-2NV-182 CN-ISIN3-2554-1.6	NDE-600	UT Elbow to Pipe	SS 40	4.000 0.237	Component	Depending on the examiners qualifications, Procedure PDI-UT-2 may be used in lieu of NDE-600. If PDI-UT-2 is used, Calibration Block PDI-UT-2-C may be used.
C05.021.229A Class B	2NV182-3 Circumferential	NV	CN-2NV-182 CN-ISIN3-2554-1.6	NDE-35	PT Elbow to Pipe	SS 40	4.000 0.237		
C05.021.247 Class B	2NV92-11 Circumferential Term end	NV	CN-2NV-92 CN-ISIN3-2554-1.1	NDE-600	UT Elbow to Nozzle	SS 40	3.000 0.216	Component	Volume Control Tank. Depending on the examiners qualifications, Procedure PDI-UT-2 may be used in lieu of NDE-600. If PDI-UT-2 is used, Calibration Block PDI-UT-2-C may be used.
C05.021.247A Class B	2NV92-11 Circumferential Term end	NV	CN-2NV-92 CN-ISIN3-2554-1.1	NDE-35	PT Elbow to Nozzle	SS 40	3.000 0.216		Volume Control Tank.

Total C05.021 Items: 34

CATEGORY C-F-1, Pressure Retaining Welds In Austenitic SS Or High Alloy Piping

Pipe Branch Connections of Branch Piping >= NPS 2

DUKE ENERGY CORPORATION
INSERVICE INSPECTION PLAN MANAGEMENT
Inservice Inspection Database Management System
Catawba 2
Inservice Inspection Plan for Interval 3 Outage 3

ITEM NUMBER	ID NUMBER	SYS	ISO/DWG NUMBERS	PROC	INSP REQ	MAT/SCH	DIA/THK	CAL BLOCKS	COMMENTS
C05.030.002	2CA53-11		CN-2CA-53	NDE-35	PT	SS-CS	2.000		
	Circumferential	CA	CN-ISIN3-2592-1.1			80	0.218		
Class B					Valve 2CA190 to Pipe				
C05.030.121	2NV262-15		CN-2NV-262	NDE-35	PT	SS	2.000		
	Socket	NV	CN-ISIN3-2554-1.5			160	0.344		
Class B					Elbow to Pipe				
C05.030.122	2NV262-17		CN-2NV-262	NDE-35	PT	SS	2.000		
	Socket	NV	CN-ISIN3-2554-1.5			160	0.344		
Class B					Pipe to Elbow				
C05.030.123	2NV262-18		CN-2NV-262	NDE-35	PT	SS	2.000		
	Socket	NV	CN-ISIN3-2554-1.5			160	0.344		
Class B					Elbow to Pipe				
C05.030.124	2NV262-21		CN-2NV-262	NDE-35	PT	SS	2.000		
	Socket	NV	CN-ISIN3-2554-1.5			160	0.344		
Class B					Pipe to Elbow				
C05.030.125	2NV262-4		CN-2NV-262	NDE-35	PT	SS	2.000		
	Socket	NV	CN-ISIN3-2554-1.5			160	0.344		
Class B					Pipe to Full Coupling				
C05.030.126	2NV262-5		CN-2NV-262	NDE-35	PT	SS	2.000		
	Socket	NV	CN-ISIN3-2554-1.5			160	0.344		
Class B					Full Coupling to Pipe				

Total C05.030 Items: 7

DUKE ENERGY CORPORATION
INSERVICE INSPECTION PLAN MANAGEMENT
Inservice Inspection Database Management System
Catawba 2
Inservice Inspection Plan for Interval 3 Outage 3

CATEGORY C-F-2, Pressure Retaining Welds In Carbon Or Low Alloy Steel Piping

Piping Welds > 1/5 in. Nom Wall for Piping >= NPS 2 and <= NPS 4

ITEM NUMBER	ID NUMBER	SYS	ISO/DWG NUMBERS	PROC	INSP REQ	MAT/SCH	DIA/THK	CAL BLOCKS	COMMENTS
C05.051.012 Class B	2CA97-10 Circumferential	CA	CN-2CA-97 CN-ISIN3-2592-1.1	NDE-600	UT Elbow to Pipe	CS 80	6.000 0.432	Component	Depending on the examiners qualifications, Procedure PDI-UT-1 may be used in lieu of NDE-600. If PDI-UT-1 is used, Calibration Block PDI-UT-1-C may be used.
C05.051.012A Class B	2CA97-10 Circumferential	CA	CN-2CA-97 CN-ISIN3-2592-1.1	NDE-25	MT Elbow to Pipe	CS 80	6.000 0.432		Depending on the examiners qualifications, Procedure PDI-UT-1 may be used in lieu of NDE-600. If PDI-UT-1 is used, Calibration Block PDI-UT-1-C may be used.
C05.051.013 Class B	2CA97-9 Circumferential	CA	CN-2CA-97 CN-ISIN3-2592-1.1	NDE-600	UT Pipe to Elbow	CS 80	6.000 0.432	Component	Depending on the examiners qualifications, Procedure PDI-UT-1 may be used in lieu of NDE-600. If PDI-UT-1 is used, Calibration Block PDI-UT-1-C may be used.
C05.051.013A Class B	2CA97-9 Circumferential	CA	CN-2CA-97 CN-ISIN3-2592-1.1	NDE-25	MT Pipe to Elbow	CS 80	6.000 0.432		
C05.051.055 Class B	2CF65-24 Circumferential	CF	CN-2CF-65 CN-ISIN3-2591-1.1	NDE-600	UT Valve 2CF044	CS 80	16.000 0.844	Component	Depending on the examiners qualifications, Procedure PDI-UT-1 may be used in lieu of NDE-600. If PDI-UT-1 is used, Calibration Block PDI-UT-1-C may be used.
C05.051.055A Class B	2CF65-24 Circumferential	CF	CN-2CF-65 CN-ISIN3-2591-1.1	NDE-25	MT Elbow to Valve 2CF044	CS 80	16.000 0.844		
C05.051.056 Class B	2CF65-27 Circumferential Term end	CF	CN-2CF-65 CN-ISIN3-2591-1.1	NDE-600	UT Elbow to Nozzle	CS 80	16.000 0.844	Component	Steam Generator 2B. Depending on the examiners qualifications, Procedure PDI-UT-1 may be used in lieu of NDE-600. If PDI-UT-1 is used, Calibration Block PDI-UT-1-C may be used.
C05.051.056A Class B	2CF65-27 Circumferential Term end	CF	CN-2CF-65 CN-ISIN3-2591-1.1	NDE-25	MT Elbow to Nozzle	CS 80	16.000 0.844		Steam Generator 2B.

Total C05.051 Items: 8

Total C05 Items: 95

CATEGORY C-G, Pressure Retaining Welds In Pumps And Valves

Pressure Vessels

ITEM NUMBER	ID NUMBER	SYS	ISO/DWG NUMBERS	PROC	INSP REQ	MAT/SCH	DIA/THK	CAL BLOCKS	COMMENTS
**** Welded Attachments ****									
C06.020.001	2CF-60		CNM 1205.12-01	NDE-25	MT	CS	18.000		Valve Body Weld - Valve Numbers in Valve Group 2CF-33, 2CF-42, 2CF-51, 2CF-60.
	Circumferential	CF	CN-ISIN3-2591-1.1				1.782		
Class B					Valve Body to Bonnet				

Total C06.020 Items: 1

Total C06 Items: 1

CATEGORY D-A, Welded Attachments For Vessels, Piping, Pumps, And Valves

Pumps

ITEM NUMBER	ID NUMBER	SYS	ISO/DWG NUMBERS	PROC	INSP REQ	MAT/SCH	DIA/THK	CAL BLOCKS	COMMENTS
****** Welded Attachments ******									
D01.020.041	2-R-TE-0022		CN-2492-TE001	QAL-13	VT-1	NA	12.000		Inspect with F01.030.201.
	Rigid Support	TE	CN-ISIN3-2593-1.2				0.750		
Class C									
D01.020.051	2-R-VN-0006		CN-2493-VN013	QAL-13	VT-1	NA	26.000		Inspect with F01.032.224.
	Spring Hgr	VN	CN-ISIN3-2609-5.0				0.750		
Class C									
D01.020.052	2-R-VN-0011		CN-2493-VN014	QAL-13	VT-1	NA	26.000		Inspect with F01.032.225.
	Spring Hgr	VN	CN-ISIN3-2609-5.0				0.750		
Class C									

Total D01.020 Items: 3

Total D01 Items: 3

CATEGORY F-A, Supports

Class 1 Piping Supports

Catawba 2

Inservice Inspection Plan for Interval 3 Outage 3

ITEM NUMBER	ID NUMBER	SYS	ISO/DWG NUMBERS	PROC	INSP REQ	MAT/SCH	DIA/THK	CAL BLOCKS	COMMENTS
****** Category A, One-Directional ******									
F01.010.057	2-R-NI-1757		CN-2491-NI116	QAL-14	VT-3	NA	10.000		
	Rigid Support	NI	CN-ISIN3-2562-1.1				0.000		
Class A									
F01.010.058	2-R-NI-1764		CN-2491-NI116	QAL-14	VT-3	NA	6.000		
	Rigid Support	NI	CN-ISIN3-2562-1.1				0.000		
Class A									
F01.010.059	2-R-NI-1765		CN-2491-NI116	QAL-14	VT-3	NA	6.000		
	Rigid Support	NI	CN-ISIN3-2562-1.1				0.000		
Class A									
F01.010.060	2-R-NI-1766		CN-2491-NI116	QAL-14	VT-3	NA	6.000		
	Rigid Support	NI	CN-ISIN3-2562-1.1				0.000		
Class A									

Total F01.010 Items: 4

CATEGORY F-A, Supports

Class 2 Piping Supports

Catawba 2
Inservice Inspection Plan for Interval 3 Outage 3

ITEM NUMBER	ID NUMBER	SYS	ISO/DWG NUMBERS	PROC	INSP REQ	MAT/SCH	DIA/THK	CAL BLOCKS	COMMENTS
**** Category A, One-Directional ****									
F01.020.004	2-R-CA-1574		CN-2491-CA009	QAL-14	VT-3	NA	6.000		
	Rigid Support	CA	CN-ISIN3-2592-1.1				0.000		
Class B									
F01.020.005	2-R-CA-1577		CN-2491-CA009	QAL-14	VT-3	NA	6.000		
	Rigid Support	CA	CN-ISIN3-2592-1.1				0.000		
Class B									
F01.020.006	2-R-CA-1578		CN-2491-CA009	QAL-14	VT-3	NA	6.000		
	Rigid Support	CA	CN-ISIN3-2592-1.1				0.000		
Class B									
F01.020.009	2-R-CA-1692		CN-2491-CA005	QAL-14	VT-3	NA	4.000		
	Rigid Support	CA	CN-ISIN3-2592-1.1				0.000		
Class B									
F01.020.034	2-R-ND-0036		CN-2492-ND010	QAL-14	VT-3	NA	8.000		
	Rigid Support	ND	CN-ISIN3-2561-1.0				0.000		
Class B									
F01.020.035	2-R-ND-0037		CN-2492-ND010	QAL-14	VT-3	NA	8.000		
	Rigid Support	ND	CN-ISIN3-2561-1.0				0.000		
Class B									
F01.020.036	2-R-ND-0040		CN-2492-ND010	QAL-14	VT-3	NA	8.000		
	Rigid Support	ND	CN-ISIN3-2561-1.0				0.000		
Class B									
F01.020.037	2-R-ND-0044		CN-2492-ND010	QAL-14	VT-3	NA	8.000		
	Rigid Support	ND	CN-ISIN3-2561-1.0				0.000		
Class B									

CATEGORY F-A, Supports

Class 2 Piping Supports

ITEM NUMBER	ID NUMBER	SYS	ISO/DWG NUMBERS	PROC	INSP REQ	MAT/SCH	DIA/THK	CAL BLOCKS	COMMENTS
F01.020.038	2-R-ND-0045		CN-2492-ND010	QAL-14	VT-3	NA	8.000		
	Rigid Support	ND	CN-ISIN3-2561-1.0				0.000		
Class B									
F01.020.066	2-R-NI-1670		CN-2491-NI042	QAL-14	VT-3	NA	8.000		
	Rigid Support	NI	CN-ISIN3-2562-1.3				0.000		
Class B									
F01.020.067	2-R-NI-1671		CN-2491-NI042	QAL-14	VT-3	NA	8.000		
	Rigid Support	NI	CN-ISIN3-2562-1.3				0.000		
Class B									
F01.020.068	2-R-NI-1673		CN-2491-NI042	QAL-14	VT-3	NA	8.000		
	Rigid Support	NI	CN-ISIN3-2562-1.3				0.000		
Class B									
F01.020.097	2-R-NS-1180		CN-2491-NS004	QAL-14	VT-3	NA	8.000		
	Rigid Support	NS	CN-ISIN3-2563-1.0				0.000		
Class B									
F01.020.098	2-R-NS-1181		CN-2491-NS004	QAL-14	VT-3	NA	8.000		
	Rigid Support	NS	CN-ISIN3-2563-1.0				0.000		
Class B									
F01.020.149	2-R-NV-0244		CN-2492-NV035	QAL-14	VT-3	NA	3.000		
	Rigid Support	NV	CN-ISIN3-2554-1.2				0.000		
Class B									
F01.020.150	2-R-NV-0272		CN-2492-NV035	QAL-14	VT-3	NA	3.000		
	Rigid Support	NV	CN-ISIN3-2554-1.2				0.000		
Class B									
F01.020.151	2-R-NV-0247		CN-2492-NV037	QAL-14	VT-3	NA	3.000		
	Rigid Support	NV	CN-ISIN3-2554-1.2				0.000		
Class B									

CATEGORY F-A, Supports

Class 2 Piping Supports

ITEM NUMBER	ID NUMBER	SYS	ISO/DWG NUMBERS	PROC	INSP REQ	MAT/SCH	DIA/THK	CAL BLOCKS	COMMENTS
F01.020.152	2-R-NV-0248		CN-2492-NV037	QAL-14	VT-3	NA	3.000		
	Rigid Support	NV	CN-ISIN3-2554-1.2				0.000		
Class B									
F01.020.153	2-R-NV-0249		CN-2492-NV037	QAL-14	VT-3	NA	3.000		
	Rigid Support	NV	CN-ISIN3-2554-1.2				0.000		
Class B									

Total F01.020 Items: 19

****** Category B, Multi-Directional ******

F01.021.001	2-R-CA-1571		CN-2491-CA009	QAL-14	VT-3	NA	6.000		
	Rigid Restraint	CA	CN-ISIN3-2592-1.1				0.000		
Class B									
F01.021.002	2-R-CA-1575		CN-2491-CA009	QAL-14	VT-3	NA	6.000		
	Rigid Restraint	CA	CN-ISIN3-2592-1.1				0.000		
Class B									
F01.021.071	2-R-NI-1672		CN-2491-NI042	QAL-14	VT-3	NA	8.000		
	Rigid Restraint	NI	CN-ISIN3-2562-1.3				0.000		
Class B									
F01.021.072	2-R-NI-1685		CN-2491-NI054	QAL-14	VT-3	NA	6.000		
	Rigid Restraint	NI	CN-ISIN3-2562-1.3				0.000		
Class B									
F01.021.096	2-R-NS-1171		CN-2491-NS005	QAL-14	VT-3	NA	8.000		
	Rigid Restraint	NS	CN-ISIN3-2563-1.0				0.000		
Class B									
F01.021.097	2-R-NS-1172		CN-2491-NS005	QAL-14	VT-3	NA	8.000		
	Rigid Restraint	NS	CN-ISIN3-2563-1.0				0.000		
Class B									

CATEGORY F-A, Supports

Class 2 Piping Supports

Catawba 2
Inservice Inspection Plan for Interval 3 Outage 3

ITEM NUMBER	ID NUMBER	SYS	ISO/DWG NUMBERS	PROC	INSP REQ	MAT/SCH	DIA/THK	CAL BLOCKS	COMMENTS
F01.021.098	2-R-NS-1174		CN-2491-NS005	QAL-14	VT-3	NA	8.000		
	Rigid Restraint	NS	CN-ISIN3-2563-1.0				0.000		
Class B									
F01.021.099	2-R-NS-1166		CN-2491-NS006	QAL-14	VT-3	NA	8.000		
	Rigid Restraint	NS	CN-ISIN3-2563-1.0				0.000		
Class B									
F01.021.100	2-R-NS-1167		CN-2491-NS006	QAL-14	VT-3	NA	8.000		
	Rigid Restraint	NS	CN-ISIN3-2563-1.0				0.000		
Class B									
F01.021.101	2-R-NS-1168		CN-2491-NS006	QAL-14	VT-3	NA	8.000		
	Rigid Restraint	NS	CN-ISIN3-2563-1.0				0.000		
Class B									
F01.021.110	2-R-NS-1219		CN-2491-NS001	QAL-14	VT-3	NA	8.000		
	Rigid Restraint	NS	CN-ISIN3-2563-1.0				0.750		
Class B									
F01.021.150	2-R-NV-1088		CN-2491-NV044	QAL-14	VT-3	NA	2.000		
	Rigid Restraint	NV	CN-ISIN3-2554-1.5				0.000		
Class B									
F01.021.151	2-R-NV-1089		CN-2491-NV044	QAL-14	VT-3	NA	2.000		
	Rigid Restraint	NV	CN-ISIN3-2554-1.5				0.000		
Class B									
F01.021.152	2-R-NV-1090		CN-2491-NV044	QAL-14	VT-3	NA	2.000		
	Rigid Restraint	NV	CN-ISIN3-2554-1.5				0.000		
Class B									
F01.021.166	2-A-NV-3684		CN-2492-NV150	QAL-14	VT-3	NA	3.000		
	Rigid Restraint	NV	CN-ISIN3-2554-1.1				0.438		
Class B									

CATEGORY F-A, Supports

Class 2 Piping Supports

Catawba 2
Inservice Inspection Plan for Interval 3 Outage 3

ITEM NUMBER	ID NUMBER	SYS	ISO/DWG NUMBERS	PROC	INSP REQ	MAT/SCH	DIA/THK	CAL BLOCKS	COMMENTS
Total F01.021 Items:	**15**								
****** Category C, Thermal Movement ******									
F01.022.033	2-R-ND-0143		CN-2492-ND007	QAL-14	VT-3	NA	14.000		
	Spring Hgr	ND	CN-ISIN3-2561-1.0				0.000		
Class B									
F01.022.034	2-R-ND-0149		CN-2492-ND007	QAL-14	VT-3	NA	14.000		
	Spring Hgr	ND	CN-ISIN3-2561-1.0				0.000		
Class B									
F01.022.207	2-R-SM-1554		CN-2491-SM003	QAL-14	VT-3	NA	34.000		
	Spring Hgr	SM	CN-ISIN3-2593-1.0				0.750		
Class B									
Total F01.022 Items:	**3**								

CATEGORY F-A, Supports

DUKE ENERGY CORPORATION
INSERVICE INSPECTION PLAN MANAGEMENT
Inservice Inspection Database Management System

Class 3 Piping Supports

Catawba 2
Inservice Inspection Plan for Interval 3 Outage 3

ITEM NUMBER	ID NUMBER	SYS	ISO/DWG NUMBERS	PROC	INSP REQ	MAT/SCH	DIA/THK	CAL BLOCKS	COMMENTS
**** Category A, One-Directional ****									
F01.030.201	2-R-TE-0022		CN-2492-TE001	QAL-14	VT-3	NA	12.000		Inspect with D01.020.041.
	Rigid Support	TE	CN-ISIN3-2593-1.2				0.750		
Class C									
F01.030.221	2-R-VN-0067		CN-2493-VN001	QAL-14	VT-3	NA	30.000		
	Rigid Support	VN	CN-ISIN3-2609-5.0				0.000		
Class C									
Total F01.030 Items:	**2**								
**** Category B, Multi-Directional ****									
F01.031.001	2-R-CA-0029		CN-2492-CA025	QAL-14	VT-3	NA	6.000		
	Rigid Restraint	CA	CN-ISIN3-2592-1.0				0.000		
Class C									
F01.031.002	2-R-CA-0031		CN-2492-CA025	QAL-14	VT-3	NA	6.000		
	Rigid Restraint	CA	CN-ISIN3-2592-1.0				0.000		
Class C									
F01.031.003	2-R-CA-0032		CN-2492-CA025	QAL-14	VT-3	NA	6.000		
	Rigid Restraint	CA	CN-ISIN3-2592-1.0				0.000		
Class C									
F01.031.007	2-R-CA-0024		CN-2492-CA025	QAL-14	VT-3	NA	6.000		
	Rigid Restraint	CA	CN-ISIN3-2592-1.0				0.000		
Class C									
F01.031.201	2-R-TE-0020		CN-2492-TE001	QAL-14	VT-3	NA	12.000		
	Rigid Restraint	TE	CN-ISIN3-2593-1.2				0.000		
Class C									
Total F01.031 Items:	**5**								
**** Category C, Thermal Movement ****									

CATEGORY F-A, Supports

Class 3 Piping Supports

ITEM NUMBER	ID NUMBER	SYS	ISO/DWG NUMBERS	PROC	INSP REQ	MAT/SCH	DIA/THK	CAL BLOCKS	COMMENTS
F01.032.221	2-R-VN-0047		CN-2493-VN011	QAL-14	VT-3	NA	26.000		
	Spring Hgr	VN	CN-ISIN3-2609-5.0				0.750		
Class C									
F01.032.222	2-R-VN-0052		CN-2493-VN012	QAL-14	VT-3	NA	26.000		
	Spring Hgr	VN	CN-ISIN3-2609-5.0				0.750		
Class C									
F01.032.224	2-R-VN-0006		CN-2493-VN013	QAL-14	VT-3	NA	26.000		Inspect with D01.020.051.
	Spring Hgr	VN	CN-ISIN3-2609-5.0				0.750		
Class C									
F01.032.225	2-R-VN-0011		CN-2493-VN014	QAL-14	VT-3	NA	26.000		Inspect with D01.020.052.
	Spring Hgr	VN	CN-ISIN3-2609-5.0				0.750		
Class C									
F01.032.252	2-R-YC-0023		CN-2525-YC004	QAL-14	VT-3	NA	6.000		
	Mech Snubber	YC	CN-ISIN3-1578-2.2				0.000		
Class C									

Total F01.032 Items: 5

CATEGORY F-A, Supports

Supports Other Than Piping Supports

Catawba 2
Inservice Inspection Plan for Interval 3 Outage 3

ITEM NUMBER	ID NUMBER	SYS	ISO/DWG NUMBERS	PROC	INSP REQ	MAT/SCH	DIA/THK	CAL BLOCKS	COMMENTS
**** Class 1, 2, and 3 ****									
F01.040.204	2KCHXA-SUPPORT		CNM 1201.06-51	QAL-14	VT-3	NA	0.000		Component Cooling Heat Exchanger 2A Support (4 Saddle Supports).
	Rigid Support	KC	CN-ISIN3-2573-1.0				0.000		
Class C									
F01.040.205	2KCPA1-SUPPORT		CN-ISIN3-2573-1.0	QAL-14	VT-3	NA	0.000		Component Cooling Pump 2A1 Support.
	Rigid Support	KC	CNM 1201.05-121				0.000		
Class C									
F01.040.206	2KCSTA-SUPPORT		CNM 1148.00-86	QAL-14	VT-3	NA	0.000		Component Cooling Surge Tank 2A (2 Saddle Supports).
	Rigid Support	KC	CN-ISIN3-2573-1.1				0.000		
Class C									
F01.040.207	2MDCAPA-SUPPORT		CNM 1201.05-351	QAL-14	VT-3	NA	0.000		Motor Driven Auxillary FeedWater Pump 2A Support.
	Rigid Support	CA	CN-ISIN3-2592-1.0				0.000		
Class C									

Total F01.040 Items: 4

Total F01 Items: 57

ITEM NUMBER	ID NUMBER	SYS	ISO/DWG NUMBERS	PROC	INSP REQ	MAT/SCH	DIA/THK	CAL BLOCKS	COMMENTS
G02.001.001	2SM38-01		CN-2SM-038	NDE-600	UT	CS	34.000	Component	Depending on the examiners qualifications, Procedure PDI-UT-1 may be used in lieu of NDE-600. If PDI-UT-1 is used, Calibration Block PDI-UT-1-C may be used.
		SM	CN-ISIN3-2593-1.0				1.375		
Class B									
G02.001.001A	2SM38-01		CN-2SM-038	NDE-25	MT	CS	34.000		
		SM	CN-ISIN3-2593-1.0				1.375		
Class B									
G02.001.002	2SM-4B-A		CN-2SM-038	NDE-600	UT	CS	34.000	Component	Grinnel Piece Mark CW-SM-4B Weld A. Depending on the examiners qualifications, Procedure PDI-UT-1 may be used in lieu of NDE-600. If PDI-UT-1 is used, Calibration Block PDI-UT-1-C may be used.
		SM	CN-ISIN3-2593-1.0				1.375		
Class B									
G02.001.002A	2SM-4B-A		CN-2SM-038	NDE-25	MT	CS	34.000		Grinnell Piece Mark CW-SM-4B Weld A
		SM	CN-ISIN3-2593-1.0				1.375		
Class B									
G02.001.003	2SM38-03		CN-2SM-038	NDE-600	UT	CS	34.000	Component	Depending on the examiners qualifications, Procedure PDI-UT-1 may be used in lieu of NDE-600. If PDI-UT-1 is used, Calibration Block PDI-UT-1-C may be used.
		SM	CN-ISIN3-2593-1.0				1.375		
Class B									
G02.001.003A	2SM38-03		CN-2SM-038	NDE-25	MT	CS	34.000		
		SM	CN-ISIN3-2593-1.0				1.375		
Class B									
G02.001.004	2SM-5B-A		CN-2SM-038	NDE-600	UT	CS	34.000	Component	Grinnell Piece Mark CW-SM-5B Weld A. Depending on the examiners qualifications, Procedure PDI-UT-1 may be used in lieu of NDE-600. If PDI-UT-1 is used, Calibration Block PDI-UT-1-C may be used.
		SM	CN-ISIN3-2593-1.0				1.375		
Class B									
G02.001.004A	2SM-5B-A		CN-2SM-038	NDE-25	MT	CS	34.000		Grinnell Piece Mark CW-SM-5B Weld A
		SM	CN-ISIN3-2593-1.0				1.375		
Class B									

ITEM NUMBER	ID NUMBER	SYS	ISO/DWG NUMBERS	PROC	INSP REQ	MAT/SCH	DIA/THK	CAL BLOCKS	COMMENTS
G02.001.005	2SM38-05		CN-2SM-038	NDE-600	UT	CS	34.000	Component	Depending on the examiners qualifications, Procedure PDI-UT-1 may be used in lieu of NDE-600. If PDI-UT-1 is used, Calibration Block PDI-UT-1-C may be used.
		SM	CN-ISIN3-2593-1.0				1.750		
Class B									
G02.001.005A	2SM38-05		CN-2SM-038	NDE-25	MT	CS	34.000		
		SM	CN-ISIN3-2593-1.0				1.750		
Class B									
G02.001.006	2SM38-14		CN-2SM-038	NDE-600	UT	CS	34.000	Component	Depending on the examiners qualifications, Procedure PDI-UT-1 may be used in lieu of NDE-600. If PDI-UT-1 is used, Calibration Block PDI-UT-1-C may be used.
		SM	CN-ISIN3-2593-1.0				1.750		
Class B									
G02.001.006A	2SM38-14		CN-2SM-038	NDE-25	MT	CS	34.000		
		SM	CN-ISIN3-2593-1.0				1.750		
Class B									
G02.001.007	2SM-7B-A		CN-2SM-038	NDE-600	UT	CS	34.000	Component	Grinnell Piece Mark CW-SM-7B Weld A. Depending on the examiners qualifications, Procedure PDI-UT-1 may be used in lieu of NDE-600. If PDI-UT-1 is used, Calibration Block PDI-UT-1-C may be used.
		SM	CN-ISIN3-2593-1.0				1.750		
Class B									
G02.001.007A	2SM-7B-A		CN-2SM-038	NDE-25	MT	CS	34.000		Grinnell Piece Mark CW-SM-7B Weld A
		SM	CN-ISIN3-2593-1.0				1.750		
Class B									
G02.001.008	2SM38-15		CN-2SM-038	NDE-600	UT	CS	34.000	Component	Depending on the examiners qualifications, Procedure PDI-UT-1 may be used in lieu of NDE-600. If PDI-UT-1 is used, Calibration Block PDI-UT-1-C may be used.
		SM	CN-ISIN3-2593-1.0				2.375		
Class B									
G02.001.008A	2SM38-15		CN-2SM-038	NDE-25	MT	CS	34.000		
		SM	CN-ISIN3-2593-1.0				2.375		
Class B									

CATEGORY AUG, Augmented Inspections

DUKE ENERGY CORPORATION
INSERVICE INSPECTION PLAN MANAGEMENT
Inservice Inspection Database Management System

Catawba 2

Inservice Inspection Plan for Interval 3 Outage 3

ITEM NUMBER	ID NUMBER	SYS	ISO/DWG NUMBERS	PROC	INSP REQ	MAT/SCH	DIA/THK	CAL BLOCKS	COMMENTS
G02.001.009	2SM-8B-A		CN-2SM-040	NDE-600	UT	CS	34.000	Component	Grinnell Piece Mark CW-SM-8B Weld A. Depending on the examiners qualifications, Procedure PDI-UT-1 may be used in lieu of NDE-600. If PDI-UT-1 is used, Calibration Block PDI-UT-1-C may be used.
Class B		SM	CN-ISIN3-2593-1.0				2.375		
G02.001.009A	2SM-8B-A		CN-2SM-040	NDE-25	MT	CS	34.000		Grinnell Piece Mark CW-SM-8B Weld A
Class B		SM	CN-ISIN3-2593-1.0				2.375		
G02.001.010	2SM40-01		CN-2SM-040	NDE-600	UT	CS	34.000	Component	Depending on the examiners qualifications, Procedure PDI-UT-1 may be used in lieu of NDE-600. If PDI-UT-1 is used, Calibration Block PDI-UT-1-C may be used.
Class B		SM	CN-ISIN3-2593-1.0				2.375		
G02.001.010A	2SM40-01		CN-2SM-040	NDE-25	MT	CS	34.000		
Class B		SM	CN-ISIN3-2593-1.0				2.375		
G02.001.011	2SM42-01		CN-2SM-042	NDE-600	UT	CS	34.000	Component	Depending on the examiners qualifications, Procedure PDI-UT-1 may be used in lieu of NDE-600. If PDI-UT-1 is used, Calibration Block PDI-UT-1-C may be used.
Class B		SM	CN-ISIN3-2593-1.0				2.375		
G02.001.011A	2SM42-01		CN-2SM-042	NDE-25	MT	CS	34.000		
Class B		SM	CN-ISIN3-2593-1.0				2.375		

Total G02.001 Items:	**22**
Total G02 Items:	**22**

CATEGORY AUG, Augmented Inspections

DUKE ENERGY CORPORATION
INSERVICE INSPECTION PLAN MANAGEMENT
Inservice Inspection Database Management System

Catawba 2

Inservice Inspection Plan for Interval 3 Outage 3

ITEM NUMBER	ID NUMBER	SYS	ISO/DWG NUMBERS	PROC	INSP REQ	MAT/SCH	DIA/THK	CAL BLOCKS	COMMENTS
G04.001.001	2NI28-1		CN-2NI-28	NDE-600	UT	SS	18.000	Component	Depending on the examiners qualifications, Procedure PDI-UT-2 may be used in lieu of NDE-600. If PDI-UT-2 is used, Calibration Block PDI-UT-2-C may be used. Weld to be examined once per 10 year interval in the same period.
	Circumferential	NI	CN-ISIN3-2562-1.3			20	0.312		
Class B					Pipe to Pipe				

Total G04.001 Items: 1

Total G04 Items: 1

ITEM NUMBER	ID NUMBER	SYS	ISO/DWG NUMBERS	PROC	INSP REQ	MAT/SCH	DIA/THK	CAL BLOCKS	COMMENTS
G06.001.001 Class A	2PZR-W4ASE Circumferential Term end Dissimilar	NC	CNM 2201.01-110/1 CNM 2201.01-110/2	QAL-15	VT-2	SS-CS	6.000 0.960		Pressurizer Safety Nozzle Safe End X-Y Quadrant. Bare Metal Visual Examination by VT-2 qualified inspector around 100% of penetration. (For responsibile individual, contact J. M. Shuping, Alloy 600 Engineer Nuclear Technical Services). Reference NRC Bulletin 2004-01). Reference Item Number G08.001.003.
G06.001.002 Class A	2PZR-W4BSE Circumferential Term end Dissimilar	NC	CNM 2201.01-110/1 CNM 2201.01-110/2	QAL-15	VT-2 Nozzle to Safe End	SS-CS	6.000 0.960		Pressurizer Safety Nozzle To Safe End. W-X Quadrant. Bare Metal Visual Examination by VT-2 qualified inspector around 100% of penetration. (For responsibile individual, contact J. M. Shuping, Alloy 600 Engineer Nuclear Technical Services). Reference NRC Bulletin 2004-01). Reference Item Number G08.001.004.
G06.001.003 Class A	2PZR-W4CSE Circumferential Term end Dissimilar	NC	CNM 2201.01-110/1 CNM 2201.01-110/2	QAL-15	VT-2 Nozzle to Safe End	SS-CS	6.000 0.960		Pressurizer Relief Nozzle To Safe End. W-Z Quadrant. Bare Metal Visual Examination by VT-2 qualified inspector around 100% of penetration. (For responsibile individual, contact J. M. Shuping, Alloy 600 Engineer Nuclear Technical Services). Reference NRC Bulletin 2004-01) . Reference Item Number G08.001.005.
G06.001.004 Class A	2PZR-W3SE Circumferential Term end Dissimilar	NC	CNM 2201.01-110/1 CNM 2201.01-110/2	QAL-15	VT-2 Nozzle to Safe End	SS-CS	6.000 0.960		Pressurizer Safety Nozzle To Safe End. Y-Z Quadrant. Bare Metal Visual Examination by VT-2 qualified inspector around 100% of penetration. (For responsibile individual, contact J. M. Shuping, Alloy 600 Engineer Nuclear Technical Services). Reference NRC Bulletin 2004-01) . Reference Item Number G08.001.002.
G06.001.005 Class A	2PZR-W1SE Circumferential Term end Dissimilar	NC	CNM 2201.01-110/1 CNM 2201.01-110/2	QAL-15	VT-2 Nozzle to Safe End	SS-CS	14.000 1.640		Pressurizer Surge Nozzle To Safe End. Bare Metal Visual Examination by VT-2 qualified inspector around 100% of penetration. (For responsibile individual, contact J. M. Shuping, Alloy 600 Engineer Nuclear Technical Services). Reference NRC Bulletin 2004-01) .

ITEM NUMBER	ID NUMBER	SYS	ISO/DWG NUMBERS	PROC	INSP REQ	MAT/SCH	DIA/THK	CAL BLOCKS	COMMENTS
									Reference Item Number G08.001.001.
G06.001.006 Class A	2PZR-W2SE Circumferential Term end Dissimilar	NC	CNM 2201.01-110/1 CNM 2201.01-110/2	QAL-15	VT-2 Nozzle to Safe End	SS-CS	4.000 0.760		Pressurizer Spray Nozzle To Safe End. Bare Metal Visual Examination by VT-2 qualified inspector around 100% of penetration. (For responsibile individual, contact J. M. Shuping, Alloy 600 Engineer Nuclear Technical Services). Reference NRC Bulletin 2004-01). Reference Item Number G08.001.006.
Total G06.001 Items:	**6**								
G06.002.001 Class A	2PZR-MANWAY	NC	CNM 2201.01-110/1 CNM 2201.01-110/2	QAL-15	VT-2	NA	0.000 0.000		Pressurizer Manway Diaphram Seal Weld. Bare Metal Visual Examination by VT-2 qualified inspector. Examine the gap between the Pressurizer Manway Cover and Manway for evidence of diaphram plate seal weld leakage. (For responsibile individual, contact J. M. Shuping, Alloy 600 Engineer Nuclear Technical Services). Reference NRC Bulletin 2004-01)
Total G06.002 Items:	**1**								
Total G06 Items:	**7**								

ITEM NUMBER	ID NUMBER	SYS	ISO/DWG NUMBERS	PROC	INSP REQ	MAT/SCH	DIA/THK	CAL BLOCKS	COMMENTS
G07.002.001	2RPV-202-121ASE		E 8871-171-009	TBD	UT	SS-CS	29.000		RV Outlet Nozzle To Safe End At 158 Degrees (Loop A). Reactor Building Coordinate is 22 Degrees. Inspect volume and requirements per MRP-139. For responsibile individual, contact J. M. Shuping, Alloy 600 Engineer Nuclear Technical Services). Note: This weld location is also required to be inspected per ASME Section XI, Item Number B05.010.006 Outage 7 (EOC20).
	Circumferential	NC	CNM 2201.01-74/5				2.625		
Class A	Term end		CNM 2201.01-0205		Nozzle to Safe End				
	Dissimilar								
G07.002.002	2RPV202-121BSE		E 8871-171-009	TBD	UT	SS-CS	29.000		RV Outlet Nozzle To Safe End At 22 Degrees (Loop B). Reactor Building Coordinate is 158 Degrees. Inspect volume and requirements per MRP-139. For responsibile individual, contact J. M. Shuping, Alloy 600 Engineer Nuclear Technical Services). Note: This weld location is also required to be inspected per ASME Section XI, Item Number B05.010.005 Outage 7 (EOC20).
	Circumferential	NC	CNM 2201.01-74/5				2.625		
Class A	Term end		CNM 2201.01-0205		Nozzle to Safe End				
	Dissimilar								
G07.002.003	2RPV202-121CSE		E 8871-171-009	TBD	UT	SS-CS	29.000		RV Outlet Nozzle To Safe End At 338 Degrees (Loop C). Reactor Building Coordinate is 202 Degrees. Inspect volume and requirements per MRP-139. For responsibile individual, contact J. M. Shuping, Alloy 600 Engineer Nuclear Technical Services). Note: This weld location is also required to be inspected per ASME Section XI, Item Number B05.010.008 Outage 7 (EOC20).
	Circumferential	NC	CNM 2201.01-74/5				2.625		
Class A	Term end		CNM 2201.01-0205		Nozzle to Safe End				
	Dissimilar								
G07.002.004	2RPV202-121DSE		E 8871-171-009	TBD	UT	SS-CS	29.000		RV Outlet Nozzle To Safe End At 202 Degrees (Loop D). Reactor Building Coordinate is 338 Degrees. Inspect volume and requirements per MRP-139. For responsibile individual, contact J. M. Shuping, Alloy 600 Engineer Nuclear Technical Services). Note: This weld location is also required to be inspected per ASME Section XI, Item Number B05.010.007 Outage 7 (EOC20).
	Circumferential	NC	CNM 2201.01-74/5				2.625		
Class A	Term end		CNM 2201.01-0205		Nozzle to Safe End				
	Dissimilar								

Total G07.002 Items: 4

Total G07 Items: 4

ITEM NUMBER	ID NUMBER	SYS	ISO/DWG NUMBERS	PROC	INSP REQ	MAT/SCH	DIA/THK	CAL BLOCKS	COMMENTS
G08.001.001 Class A	2PZR-W1SE Circumferential Term end Dissimilar	NC	CNM 2201.01-110/1 CNM 2201.01-110/2	QAL-15	VT-2 Nozzle to Safe End	SS-CS	14.000 1.640		Pressurizer Surge Nozzle To Safe End. Bare Metal Visual Examination by VT-2 qualified inspector per requirements of MRP-139. (For responsible individual, contact J. M. Shuping, Alloy 600 Engineer Nuclear Technical Services). Reference Item Number G06.001.005.
G08.001.002 Class A	2PZR-W3SE Circumferential Term end Dissimilar	NC	CNM 2201.01-110/1 CNM 2201.01-110/2	QAL-15	VT-2 Nozzle to Safe End	SS-CS	6.000 0.960		Pressurizer Safety Nozzle To Safe End. Y-Z Quadrant. Bare Metal Visual Examination by VT-2 qualified inspector per requirements of MRP-139. (For responsible individual, contact J. M. Shuping, Alloy 600 Engineer Nuclear Technical Services). Reference Item Number G06.001.004.
G08.001.003 Class A	2PZR-W4ASE Circumferential Term end Dissimilar	NC	CNM 2201.01-110/1 CNM 2201.01-110/2	QAL-15	VT-2 Nozzle to Safe End	SS-CS	6.000 0.960		Pressurizer Safety Nozzle To Safe End. X-Y Quadrant. Bare Metal Visual Examination by VT-2 qualified inspector per requirements of MRP-139. (For responsible individual, contact J. M. Shuping, Alloy 600 Engineer Nuclear Technical Services). Reference Item Number G06.001.001.
G08.001.004 Class A	2PZR-W4BSE Circumferential Term end Dissimilar	NC	CNM 2201.01-110/1 CNM 2201.01-110/2	QAL-15	VT-2 Nozzle to Safe End	SS-CS	6.000 0.960		Pressurizer Safety Nozzle To Safe End. W-X Quadrant. Bare Metal Visual Examination by VT-2 qualified inspector per requirements of MRP-139. (For responsible individual, contact J. M. Shuping, Alloy 600 Engineer Nuclear Technical Services). Reference Item Number G06.001.002.
G08.001.005 Class A	2PZR-W4CSE Circumferential Term end Dissimilar	NC	CNM 2201.01-110/1 CNM 2201.01-110/2	QAL-15	VT-2 Nozzle to Safe End	SS-CS	6.000 0.960		Pressurizer Relief Nozzle To Safe End. W-Z Quadrant. Bare Metal Visual Examination by VT-2 qualified inspector per requirements of MRP-139. (For responsible individual, contact J. M. Shuping, Alloy 600 Engineer Nuclear Technical Services). Reference Item Number G06.001.003.

ITEM NUMBER	ID NUMBER	SYS	ISO/DWG NUMBERS	PROC	INSP REQ	MAT/SCH	DIA/THK	CAL BLOCKS	COMMENTS
G08.001.006	2PZR-W2SE		CNM 2201.01-110/1	QAL-15	VT-2	SS-CS	4.000		Pressurizer Spray Nozzle To Safe End.
	Circumferential	NC	CNM 2201.01-110/2				0.760		Bare Metal Visual Examination by VT-2 qualified
Class A	Term end				Nozzle to				inspector per requirements of MRP-139. (For
	Dissimilar				Safe End				responsible individual, contact J. M. Shuping, Alloy
									600 Engineer Nuclear Technical Services).
									Reference Item Number G06.001.006.
Total G08.001 Items:	**6**								
G08.002.001	2RPV202-121ASE		E 8871-171-009	QAL-15	VT-2	SS-CS	29.000		RV Outlet Nozzle To Safe End At 158 Degrees
	Circumferential	NC	CNM 2201.01-74/5				2.625		(Loop A). Reactor Building Coordinate is 22
Class A	Term end		CNM 2201.01-0205		Nozzle to				Degrees. To Be Done With B09.011.001.
	Dissimilar				Safe End				Bare Metal Visual Examination by VT-2 qualified
									inspector per requirements of MRP-139. (For
									responsible individual, contact J. M. Shuping, Alloy
									600 Engineer Nuclear Technical Services).
									Note: This weld location is also required to be UT
									inspected per ASME Section XI, Item Number
									B05.010.006 Outage 7 (EOC20).
G08.002.002	2RPV-202-121BSE		E 8871-171-009	QAL-15	VT-2	SS-CS	29.000		RV Outlet Nozzle To Safe End At 22 Degrees (Loop
	Circumferential	NC	CNM 2201.01-74/5				2.625		B). Reactor Building Coordinate is 158 Degrees.
Class A	Term end		CNM 2201.01-0205		Nozzle to				To Be Done With B09.011.005.
	Dissimilar				Safe End				Bare Metal Visual Examination by VT-2 qualified
									inspector per requirements of MRP-139. (For
									responsible individual, contact J. M. Shuping, Alloy
									600 Engineer Nuclear Technical Services).
									Note: This weld location is also required to be UT
									inspected per ASME Section XI, Item Number
									B05.010.005 Outage 7 (EOC20).
G08.002.003	2RPV-202-121CSE		E 8871-171-009	QAL-15	VT-2	SS-CS	29.000		RV Outlet Nozzle To Safe End At 338 Degrees
	Circumferential	NC	CNM 2201.01-74/5				2.625		(Loop C). Reactor Building Coordinate is 202
Class A	Term end		CNM 2201.01-0205		Nozzle to				Degrees. To Be Done With B09.011.009.
	Dissimilar				Safe End				Bare Metal Visual Examination by VT-2 qualified
									inspector per requirements of MRP-139. (For
									responsible individual, contact J. M. Shuping, Alloy
									600 Engineer Nuclear Technical Services).
									Note: This weld location is also required to be UT
									inspected per ASME Section XI, Item Number
									B05.010.008 Outage 7 (EOC20).

CATEGORY AUG, Augmented Inspections

ITEM NUMBER	ID NUMBER	SYS	ISO/DWG NUMBERS	PROC	INSP REQ	MAT/SCH	DIA/THK	CAL BLOCKS	COMMENTS
G08.002.004	2RPV-202-121DSE		E 8871-171-009	QAL-15	VT-2	SS-CS	29.000		RV Outlet Nozzle To Safe End At 202 Degrees (Loop D). Reactor Building Coordinate is 338 Degrees. To Be Done With B09.011.013. Bare Metal Visual Examination by VT-2 qualified inspector per requirements of MRP-139. (For responsible individual, contact J. M. Shuping, Alloy 600 Engineer Nuclear Technical Services). Note: This weld location is also required to be UT inspected per ASME Section XI, Item Number B05.010.001 Outage 7 (EOC20).
	Circumferential	NC	CNM 2201.01-74/5				2.625		
Class A	Term end		CNM 2201.01-0205		Nozzle to Safe End				
	Dissimilar								

Total G08.002 Items:	**4**
Total G08 Items:	**10**

Duke Power Company

Quality Assurance Technical Services

Inservice Inspection Plan For:

Catawba Unit 2

Interval 3

ISI Outage 4

Refueling Outage EOC 17

ISI Inspection Listing

Revision 0

CATEGORY B-B, Pressure Retaining Welds In Vessels Other Than Reactor Vessels

Pressurizer

DUKE ENERGY CORPORATION
INSERVICE INSPECTION PLAN MANAGEMENT
Inservice Inspection Database Management System

Catawba 2

Inservice Inspection Plan for Interval 3 Outage 4

ITEM NUMBER	ID NUMBER	SYS	ISO/DWG NUMBERS	PROC	INSP REQ	MAT/SCH	DIA/THK	CAL BLOCKS	COMMENTS
****** Shell-to-Head; Longitudinal ******									
B02.011.001	2PZR-W8A		CNM 2201.01-110/1	NDE-620	UT	CS	91.500	50337	Pressurizer Lower Head To Shell Circumferential Weld.
	Circumferential	NC	CNM 2201.01-110/2	PDI-UT-6			3.750	50236A	
Class A					Head to Shell				
Total B02.011 Items:	**1**								
****** Head Welds ******									
B02.012.001	2PZR-W9A		CNM 2201.01-110/1	NDE-620	UT	CS	91.500	50337	Pressurizer Lower Head To Shell Longitudinal Weld.
	Longitudinal	NC	CNM 2201.01-110/2	PDI-UT-6			3.750	50236A	
Class A					Head to Shell				
Total B02.012 Items:	**1**								
Total B02 Items:	**2**								

CATEGORY B-D, Full Penetration Welded Nozzels In Vessels - Inspection Program B

Pressurizer

DUKE ENERGY CORPORATION
INSERVICE INSPECTION PLAN MANAGEMENT
Inservice Inspection Database Management System
Catawba 2
Inservice Inspection Plan for Interval 3 Outage 4

ITEM NUMBER	ID NUMBER	SYS	ISO/DWG NUMBERS	PROC	INSP REQ	MAT/SCH	DIA/THK	CAL BLOCKS	COMMENTS
**** Nozzle Inside Radius Section ****									
B03.110.001	2PZR-W1		CNM 2201.01-110/1	NDE-640	UT	CS	24.500	50337	Pressurizer Surge Nozzle To Lower Head.
	Circumferential	NC	CNM 2201.01-110/2	NDE-820			3.750		
Class A					Nozzle to Head				

Total B03.110 Items: 1

CATEGORY B-D, Full Penetration Welded Nozzels In Vessels - Inspection Program B

Steam Generators (Primary Side)

DUKE ENERGY CORPORATION
INSERVICE INSPECTION PLAN MANAGEMENT
Inservice Inspection Database Management System
Catawba 2
Inservice Inspection Plan for Interval 3 Outage 4

ITEM NUMBER	ID NUMBER	SYS	ISO/DWG NUMBERS	PROC	INSP REQ	MAT/SCH	DIA/THK	CAL BLOCKS	COMMENTS
**** Nozzle-to-Vessel Welds ****									
B03.120.001	2PZR-W1		CNM 2201.01-110/1	NDE-680	UT	CS	24.500	CB01163	Pressurizer Surge Nozzle To Lower Head. (Inside Radius Section)
		NC	CNM 2201.01-110/2				2.550		
Class A					Nozzle to Head				

Total B03.120 Items: 1

CATEGORY B-D, Full Penetration Welded Nozzels In Vessels - Inspection Program B

Heat Exchangers (Primary Side)

DUKE ENERGY CORPORATION
INSERVICE INSPECTION PLAN MANAGEMENT
Inservice Inspection Database Management System
Catawba 2
Inservice Inspection Plan for Interval 3 Outage 4

ITEM NUMBER	ID NUMBER	SYS	ISO/DWG NUMBERS	PROC	INSP REQ	MAT/SCH	DIA/THK	CAL BLOCKS	COMMENTS
****** Nozzle-to-Vessel Welds ******									
B03.140.005	2SGC-INLET		CNM 2201.01-102/2	NDE-680	UT	CS	39.000	50235	Steam Generator 2C Primary Inlet Nozzle To Lower Head. (Inside Radius Section) W-X Quadrant.
		NC	CNM 2201.01-105/1				5.160		
Class A									
B03.140.006	2SGC-OUTLET		CNM 2201.01-102/2	NDE-680	UT	CS	39.000	50235	Steam Generator 2C Primary Outlet Nozzle To Lower Head. (Inside Radius Section) W-Z Quadrant.
		NC	CNM 2201.01-105/1				5.160		
Class A									

Total B03.140 Items: 2

Total B03 Items: 4

CATEGORY B-F, Pressure Retaining Dissimilar Metal Welds In Vessel Nozzles

Steam Generator

DUKE ENERGY CORPORATION
INSERVICE INSPECTION PLAN MANAGEMENT
Inservice Inspection Database Management System
Catawba 2
Inservice Inspection Plan for Interval 3 Outage 4

ITEM NUMBER	ID NUMBER	SYS	ISO/DWG NUMBERS	PROC	INSP REQ	MAT/SCH	DIA/THK	CAL BLOCKS	COMMENTS
****** Less Than NPS 4; Nozzle-to-Safe End Butt Welds ******									
B05.070.003	2SGB-INLET-SE		CNM 2201.01-106/1	NDE-12	RT	SS-CS	31.000		Steam Generator 2B Inlet Nozzle To Safe End. To Be Done With B09.011.006.
	Circumferential	NC	CN-2NC-011				2.500		
Class A			CNM 2201.01-0217		Nozzle to Safe End				
	Dissimilar								
B05.070.003A	2SGB-INLET-SE		CNM 2201.01-106/1	NDE-35	PT	SS-CS	31.000		Steam Generator 2B Inlet Nozzle To Safe End. To Be Done With B09.011.006A.
	Circumferential	NC	CN-2NC-011				2.500		
Class A			CNM 2201.01-0217		Nozzle to Safe End				
	Dissimilar								
B05.070.004	2SGB-OUTLET-SE		CNM 2201.01-106/1	NDE-12	RT	SS-CS	31.000		Steam Generator 2B Outlet Nozzle To Safe End. To Be Done With B09.011.007.
	Circumferential	NC	CN-2NC-011				2.500		
Class A			CNM 2201.01-0217		Nozzle to Safe End				
	Dissimilar								
B05.070.004A	2SGB-OUTLET-SE		CNM 2201.01-106/1	NDE-35	PT	SS-CS	31.000		Steam Generator 2B Outlet Nozzle To Safe End. To Be Done With B09.011.007A.
	Circumferential	NC	CN-2NC-011				2.500		
Class A			CNM 2201.01-0217		Nozzle to Safe End				
	Dissimilar								
B05.070.005	2SGC-INLET-SE		CNM 2201.01-105/1	NDE-12	RT	SS-CS	31.000		Steam Generator 2C Inlet Nozzle To Safe End. To Be Done With B09.011.010. Schedule for re-examination in EOC15, EOC17 and EOC20 in accordance with ASME Section XI, Paragraph IWB-2420(b).
	Circumferential	NC	CN-2NC-013				2.500		
Class A			CNM 2201.01-0217		Nozzle to Safe End				
	Dissimilar								
B05.070.006	2SGC-OUTLET-SE		CNM 2201.01-105/1	NDE-12	RT	SS-CS	31.000		Steam Generator 2C Outlet Nozzle To Safe End. To Be Done With B09.011.011.
	Circumferential	NC	CN-2NC-013				2.500		
Class A			CNM 2201.01-0217		Nozzle to Safe End				
	Dissimilar								
B05.070.006A	2SGC-OUTLET-SE		CNM 2201.01-105/1	NDE-35	PT	SS-CS	31.000		Steam Generator 2C Outlet Nozzle To Safe End. To Be Done With B09.011.011A.
	Circumferential	NC	CN-2NC-013				2.500		
Class A			CNM 2201.01-0217		Nozzle to Safe End				
	Dissimilar								

Total B05.070 Items: 7

Total B05 Items: 7

CATEGORY B-G-1, Pressure Retaining Bolting, Greater Than 2 in. In Diameter

Reactor Vessel

ITEM NUMBER	ID NUMBER	SYS	ISO/DWG NUMBERS	PROC	INSP REQ	MAT/SCH	DIA/THK	CAL BLOCKS	COMMENTS
**** Closure Studs, in place ****									
B06.010.019	2RPV-179-102-19		E 8871-179-001	QAL-13	VT-1	CS	10.580		Reactor Vessel Closure Head Nut.
		NC	CNM 2201.01-67				1.857		
Class A									
B06.010.020	2RPV-179-102-20A		E 8871-179-001	QAL-13	VT-1	CS	10.580		Reactor Vessel Closure Head Nut.
		NC	CNM 2201.01-67				1.857		
Class A									
B06.010.021	2RPV-179-102-21A		E 8871-179-001	QAL-13	VT-1	CS	10.580		Reactor Vessel Closure Head Nut.
		NC	CNM 2201.01-67				1.857		
Class A									
B06.010.022	2RPV-179-102-22		E 8871-179-001	QAL-13	VT-1	CS	10.580		Reactor Vessel Closure Head Nut.
		NC	CNM 2201.01-67				1.857		
Class A									
B06.010.023	2RPV-179-102-23		E 8871-179-001	QAL-13	VT-1	CS	10.580		Reactor Vessel Closure Head Nut.
		NC	CNM 2201.01-67				1.857		
Class A									
B06.010.024	2RPV-179-102-24		E 8871-179-001	QAL-13	VT-1	CS	10.580		Reactor Vessel Closure Head Nut.
		NC	CNM 2201.01-67				1.857		
Class A									
B06.010.025	2RPV-179-102-25		E 8871-179-001	QAL-13	VT-1	CS	10.580		Reactor Vessel Closure Head Nut.
		NC	CNM 2201.01-67				1.857		
Class A									
B06.010.026	2RPV-179-102-26		E 8871-179-001	QAL-13	VT-1	CS	10.580		Reactor Vessel Closure Head Nut.
		NC	CNM 2201.01-67				1.857		
Class A									

CATEGORY B-G-1, Pressure Retaining Bolting, Greater Than 2 in. In Diameter

Reactor Vessel

ITEM NUMBER	ID NUMBER	SYS	ISO/DWG NUMBERS	PROC	INSP REQ	MAT/SCH	DIA/THK	CAL BLOCKS	COMMENTS
B06.010.027	2RPV-179-102-27		E 8871-179-001	QAL-13	VT-1	CS	10.580		Reactor Vessel Closure Head Nut.
		NC	CNM 2201.01-67				1.857		
Class A									
B06.010.028	2RPV-179-102-28		E 8871-179-001	QAL-13	VT-1	CS	10.580		Reactor Vessel Closure Head Nut.
		NC	CNM 2201.01-67				1.857		
Class A									
B06.010.029	2RPV-179-102-29		E 8871-179-001	QAL-13	VT-1	CS	10.580		Reactor Vessel Closure Head Nut.
		NC	CNM 2201.01-67				1.857		
Class A									
B06.010.030	2RPV-179-102-30		E 8871-179-001	QAL-13	VT-1	CS	10.580		Reactor Vessel Closure Head Nut.
		NC	CNM 2201.01-67				1.857		
Class A									
B06.010.031	2RPV-179-102-31		E 8871-179-001	QAL-13	VT-1	CS	10.580		Reactor Vessel Closure Head Nut.
		NC	CNM 2201.01-67				1.857		
Class A									
B06.010.032	2RPV-179-102-32		E 8871-179-001	QAL-13	VT-1	CS	10.580		Reactor Vessel Closure Head Nut.
		NC	CNM 2201.01-67				1.857		
Class A									
B06.010.033	2RPV-179-102-S2		E 8871-179-001	QAL-13	VT-1	CS	10.580		Reactor Vessel Closure Head Nut.
		NC	CNM 2201.01-67				1.857		
Class A									
B06.010.034	2RPV-179-102-34		E 8871-179-001	QAL-13	VT-1	CS	10.580		Reactor Vessel Closure Head Nut.
		NC	CNM 2201.01-67				1.857		
Class A									
B06.010.035	2RPV-179-102-35		E 8871-179-001	QAL-13	VT-1	CS	10.580		Reactor Vessel Closure Head Nut.
		NC	CNM 2201.01-67				1.857		
Class A									

CATEGORY B-G-1, Pressure Retaining Bolting, Greater Than 2 in. In Diameter

Reactor Vessel

ITEM NUMBER	ID NUMBER	SYS	ISO/DWG NUMBERS	PROC	INSP REQ	MAT/SCH	DIA/THK	CAL BLOCKS	COMMENTS
B06.010.036	2RPV-179-102-36		E 8871-179-001	QAL-13	VT-1	CS	10.580		Reactor Vessel Closure Head Nut.
		NC	CNM 2201.01-67				1.857		
Class A									

Total B06.010 Items: 18

CATEGORY B-G-1, Pressure Retaining Bolting, Greater Than 2 in. In Diameter

Reactor Vessel

ITEM NUMBER	ID NUMBER	SYS	ISO/DWG NUMBERS	PROC	INSP REQ	MAT/SCH	DIA/THK	CAL BLOCKS	COMMENTS
**** Threads in Flange ****									
B06.030.019	2RPV-179-101-19		E 8871-179-001	PDI-UT-5	UT	CS	7.000	50501	Reactor Vessel Closure Head Stud.
		NC	CNM 2201.01-67				57.688		
Class A									
B06.030.020	2RPV-179-101-20A		E 8871-179-001	PDI-UT-5	UT	CS	7.000	50501	Reactor Vessel Closure Head Stud.
		NC	CNM 2201.01-67				57.688		
Class A									
B06.030.021	2RPV-179-101-21A		E 8871-179-001	PDI-UT-5	UT	CS	7.000	50501	Reactor Vessel Closure Head Stud.
		NC	CNM 2201.01-67				57.688		
Class A									
B06.030.022	2RPV-179-101-22		E 8871-179-001	PDI-UT-5	UT	CS	7.000	50501	Reactor Vessel Closure Head Stud.
		NC	CNM 2201.01-67				57.688		
Class A									
B06.030.023	2RPV-179-101-23		E 8871-179-001	PDI-UT-5	UT	CS	7.000	50501	Reactor Vessel Closure Head Stud.
		NC	CNM 2201.01-67				57.688		
Class A									
B06.030.024	2RPV-179-101-24		E 8871-179-001	PDI-UT-5	UT	CS	7.000	50501	Reactor Vessel Closure Head Stud.
		NC	CNM 2201.01-67				57.688		
Class A									
B06.030.025	2RPV-179-101-25		E 8871-179-001	PDI-UT-5	UT	CS	7.000	50501	Reactor Vessel Closure Head Stud.
		NC	CNM 2201.01-67				57.688		
Class A									
B06.030.026	2RPV-179-101-26		E 8871-179-001	PDI-UT-5	UT	CS	7.000	50501	Reactor Vessel Closure Head Stud.
		NC	CNM 2201.01-67				57.688		
Class A									

CATEGORY B-G-1, Pressure Retaining Bolting, Greater Than 2 in. In Diameter

Reactor Vessel

ITEM NUMBER	ID NUMBER	SYS	ISO/DWG NUMBERS	PROC	INSP REQ	MAT/SCH	DIA/THK	CAL BLOCKS	COMMENTS
B06.030.027	2RPV-179-101-27		E 8871-179-001	PDI-UT-5	UT	CS	7.000	50501	Reactor Vessel Closure Head Stud.
		NC	CNM 2201.01-67				57.688		
Class A									
B06.030.028	2RPV-179-101-28		E 8871-179-001	PDI-UT-5	UT	CS	7.000	50501	Reactor Vessel Closure Head Stud.
		NC	CNM 2201.01-67				57.688		
Class A									
B06.030.029	2RPV-179-101-29		E 8871-179-001	PDI-UT-5	UT	CS	7.000	50501	Reactor Vessel Closure Head Stud.
		NC	CNM 2201.01-67				57.688		
Class A									
B06.030.030	2RPV-179-101-30		E 8871-179-001	PDI-UT-5	UT	CS	7.000	50501	Reactor Vessel Closure Head Stud.
		NC	CNM 2201.01-67				57.688		
Class A									
B06.030.031	2RPV-179-101-31		E 8871-179-001	PDI-UT-5	UT	CS	7.000	50501	Reactor Vessel Closure Head Stud.
		NC	CNM 2201.01-67				57.688		
Class A									
B06.030.032	2RPV-179-101-32		E 8871-179-001	PDI-UT-5	UT	CS	7.000	50501	Reactor Vessel Closure Head Stud.
		NC	CNM 2201.01-67				57.688		
Class A									
B06.030.033	2RPV-179-101-S2		E 8871-179-001	PDI-UT-5	UT	CS	7.000	50501	Reactor Vessel Closure Head Stud.
		NC	CNM 2201.01-67				57.688		
Class A									
B06.030.034	2RPV-179-101-34		E 8871-179-001	PDI-UT-5	UT	CS	7.000	50501	Reactor Vessel Closure Head Stud.
		NC	CNM 2201.01-67				57.688		
Class A									
B06.030.035	2RPV-179-101-35		E 8871-179-001	PDI-UT-5	UT	CS	7.000	50501	Reactor Vessel Closure Head Stud.
		NC	CNM 2201.01-67				57.688		
Class A									

CATEGORY B-G-1, Pressure Retaining Bolting, Greater Than 2 in. In Diameter

Reactor Vessel

ITEM NUMBER	ID NUMBER	SYS	ISO/DWG NUMBERS	PROC	INSP REQ	MAT/SCH	DIA/THK	CAL BLOCKS	COMMENTS
B06.030.036	2RPV-179-101-36		E 8871-179-001	PDI-UT-5	UT	CS	7.000	50501	Reactor Vessel Closure Head Stud.
		NC	CNM 2201.01-67				57.688		
Class A									

Total B06.030 Items: 18

CATEGORY B-G-1, Pressure Retaining Bolting, Greater Than 2 in. In Diameter

Reactor Vessel

ITEM NUMBER	ID NUMBER	SYS	ISO/DWG NUMBERS	PROC	INSP REQ	MAT/SCH	DIA/THK	CAL BLOCKS	COMMENTS
**** Closure Washers, Bushings ****									
B06.040.019	2RPV-THREAD-19		E 8871-126-002	NDE-640	UT	CS	7.000	40387	Threads in Reactor Vessel Flange.
		NC	CNM 2201.01-52				12.000		
Class A									
B06.040.020	2RPV-THREAD-20		E 8871-126-002	NDE-640	UT	CS	7.000	40387	Threads in Reactor Vessel Flange.
		NC	CNM 2201.01-52				12.000		
Class A									
B06.040.021	2RPV-THREAD-21		E 8871-126-002	NDE-640	UT	CS	7.000	40387	Threads in Reactor Vessel Flange.
		NC	CNM 2201.01-52				12.000		
Class A									
B06.040.022	2RPV-THREAD-22		E 8871-126-002	NDE-640	UT	CS	7.000	40387	Threads in Reactor Vessel Flange.
		NC	CNM 2201.01-52				12.000		
Class A									
B06.040.023	2RPV-THREAD-23		E 8871-126-002	NDE-640	UT	CS	7.000	40387	Threads in Reactor Vessel Flange.
		NC	CNM 2201.01-52				12.000		
Class A									
B06.040.024	2RPV-THREAD-24		E 8871-126-002	NDE-640	UT	CS	7.000	40387	Threads in Reactor Vessel Flange.
		NC	CNM 2201.01-52				12.000		
Class A									
B06.040.025	2RPV-THREAD-25		E 8871-126-002	NDE-640	UT	CS	7.000	40387	Threads in Reactor Vessel Flange.
		NC	CNM 2201.01-52				12.000		
Class A									
B06.040.026	2RPV-THREAD-26		E 8871-126-002	NDE-640	UT	CS	7.000	40387	Threads in Reactor Vessel Flange.
		NC	CNM 2201.01-52				12.000		
Class A									

CATEGORY B-G-1, Pressure Retaining Bolting, Greater Than 2 in. In Diameter

Reactor Vessel

ITEM NUMBER	ID NUMBER	SYS	ISO/DWG NUMBERS	PROC	INSP REQ	MAT/SCH	DIA/THK	CAL BLOCKS	COMMENTS
B06.040.027	2RPV-THREAD-27		E 8871-126-002	NDE-640	UT	CS	7.000	40387	Threads in Reactor Vessel Flange.
		NC	CNM 2201.01-52				12.000		
Class A									
B06.040.028	2RPV-THREAD-28		E 8871-126-002	NDE-640	UT	CS	7.000	40387	Threads in Reactor Vessel Flange.
		NC	CNM 2201.01-52				12.000		
Class A									
B06.040.029	2RPV-THREAD-29		E 8871-126-002	NDE-640	UT	CS	7.000	40387	Threads in Reactor Vessel Flange.
		NC	CNM 2201.01-52				12.000		
Class A									
B06.040.030	2RPV-THREAD-30		E 8871-126-002	NDE-640	UT	CS	7.000	40387	Threads in Reactor Vessel Flange.
		NC	CNM 2201.01-52				12.000		
Class A									
B06.040.031	2RPV-THREAD-31		E 8871-126-002	NDE-640	UT	CS	7.000	40387	Threads in Reactor Vessel Flange.
		NC	CNM 2201.01-52				12.000		
Class A									
B06.040.032	2RPV-THREAD-32		E 8871-126-002	NDE-640	UT	CS	7.000	40387	Threads in Reactor Vessel Flange.
		NC	CNM 2201.01-52				12.000		
Class A									
B06.040.033	2RPV-THREAD-33		E 8871-126-002	NDE-640	UT	CS	7.000	40387	Threads in Reactor Vessel Flange.
		NC	CNM 2201.01-52				12.000		
Class A									
B06.040.034	2RPV-THREAD-34		E 8871-126-002	NDE-640	UT	CS	7.000	40387	Threads in Reactor Vessel Flange.
		NC	CNM 2201.01-52				12.000		
Class A									
B06.040.035	2RPV-THREAD-35		E 8871-126-002	NDE-640	UT	CS	7.000	40387	Threads in Reactor Vessel Flange.
		NC	CNM 2201.01-52				12.000		
Class A									

CATEGORY B-G-1, Pressure Retaining Bolting, Greater Than 2 in. In Diameter

Reactor Vessel

ITEM NUMBER	ID NUMBER	SYS	ISO/DWG NUMBERS	PROC	INSP REQ	MAT/SCH	DIA/THK	CAL BLOCKS	COMMENTS
B06.040.036	2RPV-THREAD-36		E 8871-126-002	NDE-640	UT	CS	7.000	40387	Threads in Reactor Vessel Flange.
		NC	CNM 2201.01-52				12.000		
Class A									

Total B06.040 Items: 18

CATEGORY B-G-1, Pressure Retaining Bolting, Greater Than 2 in. In Diameter

Pressurizer

ITEM NUMBER	ID NUMBER	SYS	ISO/DWG NUMBERS	PROC	INSP REQ	MAT/SCH	DIA/THK	CAL BLOCKS	COMMENTS
**** Bolts and Studs ****									
B06.050.019	2RPV-179-103-19		E 8871-179-001	QAL-13	VT-1	CS	10.560		Reactor Vessel Closure Head Washer.
		NC	CNM 2201.01-67				1.719		
Class A									
B06.050.020	2RPV-179-103-20A		E 8871-179-001	QAL-13	VT-1	CS	10.560		Reactor Vessel Closure Head Washer.
		NC	CNM 2201.01-67				1.719		
Class A									
B06.050.021	2RPV-179-103-21A		E 8871-179-001	QAL-13	VT-1	CS	10.560		Reactor Vessel Closure Head Washer.
		NC	CNM 2201.01-67				1.719		
Class A									
B06.050.022	2RPV-179-103-22		E 8871-179-001	QAL-13	VT-1	CS	10.560		Reactor Vessel Closure Head Washer.
		NC	CNM 2201.01-67				1.719		
Class A									
B06.050.023	2RPV-179-103-23		E 8871-179-001	QAL-13	VT-1	CS	10.560		Reactor Vessel Closure Head Washer.
		NC	CNM 2201.01-67				1.719		
Class A									
B06.050.024	2RPV-179-103-24		E 8871-179-001	QAL-13	VT-1	CS	10.560		Reactor Vessel Closure Head Washer.
		NC	CNM 2201.01-67				1.719		
Class A									
B06.050.025	2RPV-179-103-25		E 8871-179-001	QAL-13	VT-1	CS	10.560		Reactor Vessel Closure Head Washer.
		NC	CNM 2201.01-67				1.719		
Class A									
B06.050.026	2RPV-179-103-26		E 8871-179-001	QAL-13	VT-1	CS	10.560		Reactor Vessel Closure Head Washer.
		NC	CNM 2201.01-67				1.719		
Class A									

CATEGORY B-G-1, Pressure Retaining Bolting, Greater Than 2 in. In Diameter

Pressurizer

ITEM NUMBER	ID NUMBER	SYS	ISO/DWG NUMBERS	PROC	INSP REQ	MAT/SCH	DIA/THK	CAL BLOCKS	COMMENTS
B06.050.027	2RPV-179-103-27		E 8871-179-001	QAL-13	VT-1	CS	10.560		Reactor Vessel Closure Head Washer.
		NC	CNM 2201.01-67				1.719		
Class A									
B06.050.028	2RPV-179-103-28		E 8871-179-001	QAL-13	VT-1	CS	10.560		Reactor Vessel Closure Head Washer.
		NC	CNM 2201.01-67				1.719		
Class A									
B06.050.029	2RPV-179-103-29		E 8871-179-001	QAL-13	VT-1	CS	10.560		Reactor Vessel Closure Head Washer.
		NC	CNM 2201.01-67				1.719		
Class A									
B06.050.030	2RPV-179-103-30		E 8871-179-001	QAL-13	VT-1	CS	10.560		Reactor Vessel Closure Head Washer.
		NC	CNM 2201.01-67				1.719		
Class A									
B06.050.031	2RPV-179-103-31		E 8871-179-001	QAL-13	VT-1	CS	10.560		Reactor Vessel Closure Head Washer.
		NC	CNM 2201.01-67				1.719		
Class A									
B06.050.032	2RPV-179-103-32		E 8871-179-001	QAL-13	VT-1	CS	10.560		Reactor Vessel Closure Head Washer.
		NC	CNM 2201.01-67				1.719		
Class A									
B06.050.033	2RPV-179-103-S2		E 8871-179-001	QAL-13	VT-1	CS	10.560		Reactor Vessel Closure Head Washer.
		NC	CNM 2201.01-67				1.719		
Class A									
B06.050.034	2RPV-179-103-34		E 8871-179-001	QAL-13	VT-1	CS	10.560		Reactor Vessel Closure Head Washer.
		NC	CNM 2201.01-67				1.719		
Class A									
B06.050.035	2RPV-179-103-35		E 8871-179-001	QAL-13	VT-1	CS	10.560		Reactor Vessel Closure Head Washer.
		NC	CNM 2201.01-67				1.719		
Class A									

CATEGORY B-G-1, Pressure Retaining Bolting, Greater Than 2 in. In Diameter

Pressurizer

ITEM NUMBER	ID NUMBER	SYS	ISO/DWG NUMBERS	PROC	INSP REQ	MAT/SCH	DIA/THK	CAL BLOCKS	COMMENTS
B06.050.036	2RPV-179-103-36		E 8871-179-001	QAL-13	VT-1	CS	10.560		Reactor Vessel Closure Head Washer.
		NC	CNM 2201.01-67				1.719		
Class A									

Total B06.050 Items: 18

CATEGORY B-G-1, Pressure Retaining Bolting, Greater Than 2 in. In Diameter

Pumps

ITEM NUMBER	ID NUMBER	SYS	ISO/DWG NUMBERS	PROC	INSP REQ	MAT/SCH	DIA/THK	CAL BLOCKS	COMMENTS
**** Nuts, Bushings, and Washers ****									
B06.190.001	2RCP-2A-FLANGE		CN-2NC-009	QAL-13	VT-1	SS	0.000		Reactor Colant Pump 2A Main Flange Surface.
		NC	CNM 2201.01-115				0.000		Examine When Connection Is Disassembled.
Class A									
B06.190.002	2RCP-2B-FLANGE		CN-2NC-011	QAL-13	VT-1	SS	0.000		Reactor Colant Pump 2B Main Flange Surface.
		NC	CNM 2201.01-115				0.000		Examine When Connection Is Disassembled.
Class A									
B06.190.003	2RCP-2C-FLANGE		CN-2NC-013	QAL-13	VT-1	SS	0.000		Reactor Colant Pump 2C Main Flange Surface.
		NC	CNM 2201.01-115				0.000		Examine When Connection Is Disassembled.
Class A									
B06.190.004	2RCP-2D-FLANGE		CN-2NC-015	QAL-13	VT-1	SS	0.000		Reactor Colant Pump 2D Main Flange Surface.
		NC	CNM 2201.01-115				0.000		Examine When Connection Is Disassembled.
Class A									

Total B06.190 Items: 4

Total B06 Items: 76

DUKE ENERGY CORPORATION
INSERVICE INSPECTION PLAN MANAGEMENT
Inservice Inspection Database Management System

Catawba 2

Inservice Inspection Plan for Interval 3 Outage 4

CATEGORY B-G-2, Pressure Retaining Bolting, 2 in. And Less In Diameter

CRD Housings

ITEM NUMBER	ID NUMBER	SYS	ISO/DWG NUMBERS	PROC	INSP REQ	MAT/SCH	DIA/THK	CAL BLOCKS	COMMENTS
****** Bolts, Studs, and Nuts ******									
B07.070.021	2NI-54A		CN-2NI-59	QAL-13	VT-1	SS	1.630		10" Valve (18 Studs, 18 Nuts). Examine All Studs And Nuts. Inspect Only One Valve In This Group Per Interval.
Class A		NI	CNM-1205.00-71				10.500		
B07.070.022	2NI-59		CN-2NI-184	QAL-13	VT-1	SS	1.630		10" Valve (18 Studs, 18 Nuts). Examine All Studs And Nuts. Inspect Only One Valve In This Group Per Interval.
Class A		NI	CNM-1205.00-62				10.500		

Total B07.070 Items: 2

DUKE ENERGY CORPORATION
INSERVICE INSPECTION PLAN MANAGEMENT
Inservice Inspection Database Management System

Catawba 2

Inservice Inspection Plan for Interval 3 Outage 4

CATEGORY B-G-2, Pressure Retaining Bolting, 2 in. And Less In Diameter

NPS 4 or Larger

ITEM NUMBER	ID NUMBER	SYS	ISO/DWG NUMBERS	PROC	INSP REQ	MAT/SCH	DIA/THK	CAL BLOCKS	COMMENTS
B07.080.001	2CRD-HOUSING		CNM 2201.01-74/7 CNM 2201.01-89	QAL-13	VT-1	SS	6.000 0.000		Threaded Housing With Seal Weld. Examine Only CRD Bolting That Is Resued When Housing Is Disassembled.
Class A									

Total B07.080 Items: 1

Total B07 Items: 3

CATEGORY B-J, Pressure Retaining Welds In Piping

Less Than NPS 4

ITEM NUMBER	ID NUMBER	SYS	ISO/DWG NUMBERS	PROC	INSP REQ	MAT/SCH	DIA/THK	CAL BLOCKS	COMMENTS
B09.011.006	2NC11-2		CN-2NC-011	NDE-12	RT	SS-CS	31.000		Reactor Coolant Loop 2B Hot Leg. Steam Generator 2B Inlet Nozzle Safe End To Pipe. To be done with B05.070.003.
	Circumferential	NC	CN-ISIN3-2553-1.0				2.500		
Class A	Term end		CNM 2201.01-0217		Safe End to				
	Dissimilar				Pipe				
B09.011.006A	2NC11-2		CN-2NC-011	NDE-35	PT	SS-CS	31.000		Reactor Coolant Loop 2B Hot Leg. Steam Generator 2B Inlet Nozzle Safe End To Pipe. To be done with B05.070.003A.
	Circumferential	NC	CN-ISIN3-2553-1.0				2.500		
Class A	Term end		CNM 2201.01-0217		Safe End to				
	Dissimilar				Pipe				
B09.011.007	2NC11-3		CN-2NC-011	NDE-12	RT	SS-CS	31.000		Reactor Coolant Loop 2B Crossover Leg. Steam Generator 2B Outlet Nozzle Safe End To Pipe. To be done with B05.070.004.
	Circumferential	NC	CN-ISIN3-2553-1.0				2.500		
Class A	Term end		CNM 2201.01-0217		Safe End to				
	Dissimilar				Pipe				
B09.011.007A	2NC11-3		CN-2NC-011	NDE-35	PT	SS-CS	31.000		Reactor Coolant Loop 2B Crossover Leg. Steam Generator 2B Outlet Nozzle Safe End To Pipe. To be done with B05.070.004A.
	Circumferential	NC	CN-ISIN3-2553-1.0				2.500		
Class A	Term end		CNM 2201.01-0217		Safe End to				
	Dissimilar				Pipe				
B09.011.010	2NC13-2		CN-2NC-013	NDE-12	RT	SS-CS	31.000		Reactor Coolant Loop 2C Hot Leg. Steam Generator 2C Inlet Nozzle Safe End To Pipe. To be done with B05.070.005. Schedule for re-examination in EOC15, EOC17 and EOC20 in accordance with ASME Section XI, Paragraph IWB-2420(b).
	Circumferential	NC	CN-ISIN3-2553-1.0				2.500		
Class A	Term end		CNM 2201.01-0217		Safe End to				
	Dissimilar				Pipe				

CATEGORY B-J, Pressure Retaining Welds In Piping

Less Than NPS 4

DUKE ENERGY CORPORATION
INSERVICE INSPECTION PLAN MANAGEMENT
Inservice Inspection Database Management System
Catawba 2
Inservice Inspection Plan for Interval 3 Outage 4

ITEM NUMBER	ID NUMBER	SYS	ISO/DWG NUMBERS	PROC	INSP REQ	MAT/SCH	DIA/THK	CAL BLOCKS	COMMENTS
B09.011.011	2NC13-3		CN-2NC-013	NDE-12	RT	SS-CS	31.000		Reactor Coolant Loop 2C Crossover Leg. Steam Generator 2C Outlet Nozzle Safe End To Pipe. To be done with B05.070.006.
	Circumferential	NC	CN-ISIN3-2553-1.0				2.500		
Class A	Term end		CNM 2201.01-0217		Safe End to				
	Dissimilar				Pipe				
B09.011.011A	2NC13-3		CN-2NC-013	NDE-35	PT	SS-CS	31.000		Reactor Coolant Loop 2C Crossover Leg. Steam Generator 2C Outlet Nozzle Safe End To Pipe. To be done with B05.070.006A.
	Circumferential	NC	CN-ISIN3-2553-1.0				2.500		
Class A	Term end		CNM 2201.01-0217		Safe End to				
	Dissimilar				Pipe				
B09.011.068	2NC8-2		CN-2NC-8	NDE-600	UT	SS	14.000	Component	Presssurizer Surge Line. Pc. P6 to Pc. P5. Depending on the examiners qualifications, Procedure PDI-UT-2 may be used in lieu of NDE-600. If PDI-UT-2 is used, Calibration Block PDI-UT-2-C may be used.
	Circumferential	NC	CN-ISIN3-2553-1.1			160	1.406		
Class A			CNM 2201.01-95		Pipe to				
					Pipe				
B09.011.068A	2NC8-2		CN-2NC-8	NDE-35	PT	SS	14.000		Presssurizer Surge Line. Pc. P6 to Pc. P5.
	Circumferential	NC	CN-ISIN3-2553-1.1			160	1.406		
Class A					Pipe to				
					Pipe				
B09.011.069	2NC8-3		CN-2NC-8	NDE-600	UT	SS	14.000	Component	Presssurizer Surge Line. Safe End to Pc. P1. Depending on the examiners qualifications, Procedure PDI-UT-2 may be used in lieu of NDE-600. If PDI-UT-2 is used, Calibration Block PDI-UT-2-C may be used.
	Circumferential	NC	CN-ISIN3-2553-1.1			160	1.406		
Class A			CNM 2201.01-95		Safe End to				
					Pipe				
B09.011.069A	2NC8-3		CN-2NC-8	NDE-35	PT	SS	14.000		Presssurizer Surge Line. Safe End to Pc. P1.
	Circumferential	NC	CN-ISIN3-2553-1.1			160	1.406		
Class A			CNM 2201.01-95		Safe End to				
					Pipe				
B09.011.181	2NI74-1		CN-2NI-74	NDE-600	UT	SS	6.000	Component	Depending on the examiners qualifications, Procedure PDI-UT-2 may be used in lieu of NDE-600. If PDI-UT-2 is used, Calibration Block PDI-UT-2-C may be used.
	Circumferential	NI	CN-ISIN3-2562-1.1			160	0.719		
Class A					Elbow to				
					Pipe				
B09.011.181A	2NI74-1		CN-2NI-74	NDE-35	PT	SS	6.000		
	Circumferential	NI	CN-ISIN3-2562-1.1			160	0.719		
Class A					Elbow to				
					Pipe				

CATEGORY B-J, Pressure Retaining Welds In Piping

Less Than NPS 4

ITEM NUMBER	ID NUMBER	SYS	ISO/DWG NUMBERS	PROC	INSP REQ	MAT/SCH	DIA/THK	CAL BLOCKS	COMMENTS
B09.011.182	2NI74-11		CN-2NI-74	NDE-600	UT	SS	6.000	Component	Depending on the examiners qualifications, Procedure PDI-UT-2 may be used in lieu of NDE-600. If PDI-UT-2 is used, Calibration Block PDI-UT-2-C may be used.
	Circumferential	NI	CN-ISIN3-2562-1.1			160	0.719		
Class A					Elbow to Pipe				
B09.011.182A	2NI74-11		CN-2NI-74	NDE-35	PT	SS	6.000		
	Circumferential	NI	CN-ISIN3-2562-1.1			160	0.719		
Class A					Pipe				
B09.011.183	2NI74-3		CN-2NI-74	NDE-600	UT	SS	6.000	Component	Depending on the examiners qualifications, Procedure PDI-UT-2 may be used in lieu of NDE-600. If PDI-UT-2 is used, Calibration Block PDI-UT-2-C may be used.
	Circumferential	NI	CN-ISIN3-2562-1.1			160	0.719		
Class A					Elbow to Pipe				
B09.011.183A	2NI74-3		CN-2NI-74	NDE-35	PT	SS	6.000		
	Circumferential	NI	CN-ISIN3-2562-1.1			160	0.719		
Class A					Elbow to Pipe				
B09.011.184	2NI74-9		CN-2NI-74	NDE-600	UT	SS	6.000	Component	Depending on the examiners qualifications, Procedure PDI-UT-2 may be used in lieu of NDE-600. If PDI-UT-2 is used, Calibration Block PDI-UT-2-C may be used.
	Circumferential	NI	CN-ISIN3-2562-1.1			160	0.719		
Class A					Pipe to Elbow				
B09.011.184A	2NI74-9		CN-2NI-74	NDE-35	PT	SS	6.000		
	Circumferential	NI	CN-ISIN3-2562-1.1			160	0.719		
Class A					Pipe to Elbow				
B09.011.187	2NI91-5		CN-2NI-91	NDE-600	UT	SS	8.000	Component	Depending on the examiners qualifications, Procedure PDI-UT-2 may be used in lieu of NDE-600. If PDI-UT-2 is used, Calibration Block PDI-UT-2-C may be used.
	Circumferential	NI	CN-ISIN3-2562-1.2			160	0.906		
Class A					Pipe to Elbow				
B09.011.187A	2NI91-5		CN-2NI-91	NDE-35	PT	SS	8.000		
	Circumferential	NI	CN-ISIN3-2562-1.2			160	0.906		
Class A					Pipe to Elbow				
B09.011.188	2NI91-7		CN-2NI-91	NDE-600	UT	SS	8.000	Component	Depending on the examiners qualifications, Procedure PDI-UT-2 may be used in lieu of NDE-600. If PDI-UT-2 is used, Calibration Block PDI-UT-2-C may be used.
	Circumferential	NI	CN-ISIN3-2562-1.2			160	0.906		
Class A					Pipe to Elbow				

CATEGORY B-J, Pressure Retaining Welds In Piping

Less Than NPS 4

ITEM NUMBER	ID NUMBER	SYS	ISO/DWG NUMBERS	PROC	INSP REQ	MAT/SCH	DIA/THK	CAL BLOCKS	COMMENTS
B09.011.188A	2NI91-7		CN-2NI-91	NDE-35	PT	SS	8.000		
	Circumferential	NI	CN-ISIN3-2562-1.2			160	0.906		
Class A					Pipe to Elbow				
B09.011.189	2NI91-9		CN-2NI-91	NDE-600	UT	SS	8.000	Component	Depending on the examiners qualifications, Procedure PDI-UT-2 may be used in lieu of NDE-600. If PDI-UT-2 is used, Calibration Block PDI-UT-2-C may be used.
	Circumferential	NI	CN-ISIN3-2562-1.2			160	0.906		
Class A					Pipe to Elbow				
B09.011.189A	2NI91-9		CN-2NI-91	NDE-35	PT	SS	8.000		
	Circumferential	NI	CN-ISIN3-2562-1.2			160	0.906		
Class A					Pipe to Elbow				

Total B09.011 Items: 25

CATEGORY B-J, Pressure Retaining Welds In Piping

Branch Pipe Connection Welds

ITEM NUMBER	ID NUMBER	SYS	ISO/DWG NUMBERS	PROC	INSP REQ	MAT/SCH	DIA/THK	CAL BLOCKS	COMMENTS
B09.021.051	2NI396-5		CN-2NI-396	NDE-35	PT	SS	2.000		
	Circumferential	NI	CN-ISIN3-2562-1.2			160	0.344		
Class A					Reducer to Pipe				

Total B09.021 Items: 1

CATEGORY B-J, Pressure Retaining Welds In Piping

Branch Pipe Connection Welds

ITEM NUMBER	ID NUMBER	SYS	ISO/DWG NUMBERS	PROC	INSP REQ	MAT/SCH	DIA/THK	CAL BLOCKS	COMMENTS
**** Less Than NPS 4 ****									
B09.031.003	2NC13-WN9		CN-2NC-13	NDE-830	UT	SS	12.000	50386	Reactor Coolant Loop 2C Hot Leg.
	Branch	NC	CN-ISIN3-2553-1.0			140	2.300		
Class A			CNM 2201.01-104/7		Branch to Pipe				
B09.031.003A	2NC13-WN9		CN-2NC-13	NDE-35	PT	SS	12.000		Reactor Coolant Loop 2C Hot Leg.
	Branch	NC	CN-ISIN3-2553-1.0			140	2.300		
Class A			CNM 2201.01-104/7		Branch to Pipe				
Total B09.031 Items:	**2**								
B09.032.002	2NC9-WN6		CN-2NC-9	NDE-35	PT	SS	2.000		Reactor Coolant Loop 2A Crossover Leg.
	Branch	NC	CN-ISIN3-2553-1.0			160	1.355		
Class A			CNM 2201.01-104/2		Branch to Pipe				
B09.032.005	2NC13-WN4		CN-2NC-13	NDE-35	PT	SS	2.000		Reactor Coolant Loop 2C Cold Leg.
	Branch	NC	CN-ISIN3-2553-1.0			160	1.355		
Class A			CNM 2201.01-104/9		Branch to Pipe				
B09.032.006	2NC13-WN8A		CN-2NC-13	NDE-35	PT	SS	1.500		Reactor Coolant Loop 2C Cold Leg.
	Branch	NC	CN-ISIN3-2553-1.0			160	1.081		
Class A			CNM 2201.01-104/9		Branch to Pipe				
Total B09.032 Items:	**3**								

CATEGORY B-J, Pressure Retaining Welds In Piping

Pressure Vessels

ITEM NUMBER	ID NUMBER	SYS	ISO/DWG NUMBERS	PROC	INSP REQ	MAT/SCH	DIA/THK	CAL BLOCKS	COMMENTS
**** Welded Attachments ****									
B09.040.009	2NC74-1		CN-2NC-74	NDE-35	PT	SS	2.000		Reactor Coolant Loop 2D Crossover Leg.
	Socket	NC	CN-ISIN3-2553-1.0			160	0.344		
Class A	Stress weld				Nozzle to Pipe				
B09.040.010	2NC74-10		CN-2NC-74	NDE-35	PT	SS	2.000		
	Socket	NC	CN-ISIN3-2553-1.0			160	0.344		
Class A					Tee to Pipe				
B09.040.011	2NC74-12		CN-2NC-74	NDE-35	PT	SS	2.000		
	Socket	NC	CN-ISIN3-2553-1.0			160	0.344		
Class A					Tee to Reducing Insert				
B09.040.012	2NC74-9		CN-2NC-74	NDE-35	PT	SS	2.000		
	Socket	NC	CN-ISIN3-2553-1.0			160	0.344		
Class A					Pipe to Tee				
B09.040.054	2NI295-2		CN-2NI-295	NDE-35	PT	SS	2.000		
	Socket	NI	CN-ISIN3-2562-1.3			160	0.344		
Class A					Pipe to Elbow				
B09.040.055	2NI295-4		CN-2NI-295	NDE-35	PT	SS	2.000		
	Socket	NI	CN-ISIN3-2562-1.3			160	0.344		
Class A					Pipe to Special Weld Boss				
B09.040.056	2NI297-3		CN-2NI-297	NDE-35	PT	SS	2.000		
	Socket	NI	CN-ISIN3-2562-1.3			160	0.344		
Class A					Elbow to Pipe				
B09.040.057	2NI297-5		CN-2NI-297	NDE-35	PT	SS	2.000		
	Socket	NI	CN-ISIN3-2562-1.3			160	0.344		
Class A					Elbow to Pipe				

CATEGORY B-J, Pressure Retaining Welds In Piping

Pressure Vessels

ITEM NUMBER	ID NUMBER	SYS	ISO/DWG NUMBERS	PROC	INSP REQ	MAT/SCH	DIA/THK	CAL BLOCKS	COMMENTS
B09.040.058	2NI301-1		CN-2NI-301	NDE-35	PT	SS	2.000		
	Socket	NI	CN-ISIN3-2562-1.3			160	0.344		
Class A					Valve 2NI167 to Pipe				
B09.040.059	2NI301-4		CN-2NI-301	NDE-35	PT	SS	2.000		
	Socket	NI	CN-ISIN3-2562-1.3			160	0.344		
Class A					Pipe to Special Weld Boss				
B09.040.060	2NI304-1		CN-2NI-304	NDE-35	PT	SS	2.000		
	Socket	NI	CN-ISIN3-2562-1.0			160	0.344		
Class A					Reducing Insert to Valve 2NI354				
B09.040.061	2NI304-3		CN-2NI-304	NDE-35	PT	SS	1.500		
	Socket	NI	CN-ISIN3-2562-1.0			160	0.281		
Class A					Reducing Insert to Pipe				

Total B09.040 Items:	**12**
Total B09 Items:	**43**

CATEGORY B-K, Welded Attachments For Vessels, Piping, Pumps, And Valves

Piping

DUKE ENERGY CORPORATION
INSERVICE INSPECTION PLAN MANAGEMENT
Inservice Inspection Database Management System
Catawba 2
Inservice Inspection Plan for Interval 3 Outage 4

ITEM NUMBER	ID NUMBER	SYS	ISO/DWG NUMBERS	PROC	INSP REQ	MAT/SCH	DIA/THK	CAL BLOCKS	COMMENTS
****** Welded Attachments ******									
B10.010.001	2PZR-SKIRT		CNM 1201.01-66	NDE-952	UT	CS	87.000	50237B	Pressurizer Support Skirt to Lower Head (Welded Attachment). A Request for Alternative will be submitted to perform a UT from the accessible side of the Pressurizer Skirt in lieu of a MT.
		NC	CN-ISIN3-2553-1.1				1.500		
Class A					Support Skirt to Head				
B10.010.001A	2PZR-SKIRT		CNM 1201.01-66	NDE-25	MT	CS	87.000		Pressurizer Support Skirt to Lower Head (Welded Attachment).
		NC	CN-ISIN3-2553-1.1				1.500		
Class A					Support Skirt to Head				

Total B10.010 Items: 2

Total B10 Items: 2

CATEGORY B-L-2, Pump Casings

Valves

ITEM NUMBER	ID NUMBER	SYS	ISO/DWG NUMBERS	PROC	INSP REQ	MAT/SCH	DIA/THK	CAL BLOCKS	COMMENTS
****** Valves, Less Than NPS 4; Valve Body Welds ******									
B12.020.001	2RCP-2A		CN-2NC-9	QAL-14	VT-3	SS	77.000		Reactor Coolant Pump 2A Casing Internal Surfaces. Only One Pump Required To Be Examined Per Interval. Inspect Only If Pump Is Disassembled For Maintenance, Repair, Or Volumetric Examination.
Class A		NC	CNM-1201.01-115				4.500		
B12.020.002	2RCP-2B		CN-2NC-11	QAL-14	VT-3	SS	77.000		Reactor Coolant Pump 2B Casing Internal Surfaces. Only One Pump Required To Be Examined Per Interval. Inspect Only If Pump Is Disassembled For Maintenance, Repair, Or Volumetric Examination.
Class A		NC	CNM-1201.01-115				4.500		
B12.020.003	2RCP-2C		CN-2NC-13	QAL-14	VT-3	SS	77.000		Reactor Coolant Pump 2C Casing Internal Surfaces. Only One Pump Required To Be Examined Per Interval. Inspect Only If Pump Is Disassembled For Maintenance, Repair, Or Volumetric Examination.
Class A		NC	CNM-1201.01-115				4.500		
B12.020.004	2RCP-2D		CN-2NC-15	QAL-14	VT-3	SS	77.000		Reactor Coolant Pump 2D Casing Internal Surfaces. Only One Pump Required To Be Examined Per Interval. Inspect Only If Pump Is Disassembled For Maintenance, Repair, Or Volumetric Examination.
Class A		NC	CNM-1201.01-115				4.500		

Total B12.020 Items: 4

CATEGORY B-M-2, Valve Body

Reactor Vessel

Catawba 2
Inservice Inspection Plan for Interval 3 Outage 4

ITEM NUMBER	ID NUMBER	SYS	ISO/DWG NUMBERS	PROC	INSP REQ	MAT/SCH	DIA/THK	CAL BLOCKS	COMMENTS
**** Vessel Interior ****									
B12.050.001A Class A	2NC-1	NC	CN-2NC-112 CNM-1205.09-01	QAL-14	VT-3	SS 160	6.000 0.719		6" Relief Valve. Inspect One Of The Following Valves: 2NC-1, 2NC-2, Or 2NC-3. Inspect Only If Disassembled For Maintenance, Repair, Or Volumetric Examination.
B12.050.001B Class A	2NC-2	NC	CN-2NC-119 CNM-1205.09-01	QAL-14	VT-3	SS 160	6.000 0.719		6" Relief Valve. Inspect One Of The Following Valves: 2NC-1, 2NC-2, Or 2NC-3. Inspect Only If Disassembled For Maintenance, Repair, Or Volumetric Examination.
B12.050.001C Class A	2NC-3	NC	CN-2NC-163 CNM-1205.09-01	QAL-14	VT-3	SS 160	6.000 0.719		6" Relief Valve. Inspect One Of The Following Valves: 2NC-1, 2NC-2, Or 2NC-3. Inspect Only If Disassembled For Maintenance, Repair, Or Volumetric Examination.
B12.050.002A Class A	2NC-27	NC	CN-2NC-24 CNM-1205.06-41	QAL-14	VT-3	SS 160	6.000 0.719		6" Fisher Control Valve. Inspect One Of The Following Valves: 2NC-27, Or 2NC-29. Inspect Only If Disassembled For Maintenance, Repair, Or Volumetric Examination.
B12.050.002B Class A	2NC-29	NC	CN-2NC-33 CNM-1205.06-41	QAL-14	VT-3	SS 160	6.000 0.719		6" Fisher Control Valve. Inspect One Of The Following Valves: 2NC-27, Or 2NC-29. Inspect Only If Disassembled For Maintenance, Repair, Or Volumetric Examination.
B12.050.003A Class A	2ND-36B	ND	CN-2ND-66 CNM-1205.00-262	QAL-14	VT-3	SS 140	12.000 2.043		12" Borg Warner Gate Valve. Inspect One Of The Following Valves: 2ND-1B, 2ND-2A, 2ND-36B, Or 2ND-37A. Inspect Only If Disassembled For Maintenance, Repair, Or Volumetric Examination.
B12.050.003B Class A	2ND-37A	ND	CN-2ND-66 CNM-1205.00-262	QAL-14	VT-3	SS 140	12.000 2.043		12" Borg Warner Gate Valve. Inspect One Of The Following Valves: 2ND-1B, 2ND-2A, 2ND-36B, Or 2ND-37A. Inspect Only If Disassembled For Maintenance, Repair, Or Volumetric Examination.
B12.050.003C Class A	2ND-1B	ND	CN-2ND-67 CNM-1205.00-262	QAL-14	VT-3	SS 140	12.000 2.043		12" Borg Warner Gate Valve. Inspect One Of The Following Valves: 2ND-1B, 2ND-2A, 2ND-36B, Or 2ND-37A. Inspect Only If Disassembled For Maintenance, Repair, Or Volumetric Examination.

CATEGORY B-M-2, Valve Body

Reactor Vessel

ITEM NUMBER	ID NUMBER	SYS	ISO/DWG NUMBERS	PROC	INSP REQ	MAT/SCH	DIA/THK	CAL BLOCKS	COMMENTS
B12.050.003D	2ND-2A		CN-2ND-67	QAL-14	VT-3	SS	12.000		12" Borg Warner Gate Valve. Inspect One Of The Following Valves: 2ND-1B, 2ND-2A, 2ND-36B, Or 2ND-37A. Inspect Only If Disassembled For Maintenance, Repair, Or Volumetric Examination.
Class A		ND	CNM-1205.00-262			140	2.043		
B12.050.004A	2NI-126		CN-2NI-379	QAL-14	VT-3	SS	6.000		6" Westinghouse Check Valve. Inspect One Of The Following Valves: 2NI-126, 2NI-134, 2NI-157, 2NI-160, 2NI-175, 2NI-176, 2NI-180, Or 2NI-181. Inspect Only If Disassembled For Maintenance, Repair, Or Volumetric Examination.
Class A		NI	CNM-1205.00-63			160	0.719		
B12.050.004B	2NI-134		CN-2NI-91	QAL-14	VT-3	SS	6.000		6" Westinghouse Check Valve. Inspect One Of The Following Valves: 2NI-126, 2NI-134, 2NI-157, 2NI-160, 2NI-175, 2NI-176, 2NI-180, Or 2NI-181. Inspect Only If Disassembled For Maintenance, Repair, Or Volumetric Examination.
Class A		NI	CNM-1205.00-63			160	0.719		
B12.050.004C	2NI-157		CN-2NI-398	QAL-14	VT-3	SS	6.000		6" Westinghouse Check Valve. Inspect One Of The Following Valves: 2NI-126, 2NI-134, 2NI-157, 2NI-160, 2NI-175, 2NI-176, 2NI-180, Or 2NI-181. Inspect Only If Disassembled For Maintenance, Repair, Or Volumetric Examination.
Class A		NI	CNM-1205.00-63			160	0.719		
B12.050.004D	2NI-160		CN-2NI-396	QAL-14	VT-3	SS	6.000		6" Westinghouse Check Valve. Inspect One Of The Following Valves: 2NI-126, 2NI-134, 2NI-157, 2NI-160, 2NI-175, 2NI-176, 2NI-180, Or 2NI-181. Inspect Only If Disassembled For Maintenance, Repair, Or Volumetric Examination.
Class A		NI	CNM-1205.00-63			160	0.719		
B12.050.004E	2NI-175		CN-2NI-70	QAL-14	VT-3	SS	6.000		6" Westinghouse Check Valve. Inspect One Of The Following Valves: 2NI-126, 2NI-134, 2NI-157, 2NI-160, 2NI-175, 2NI-176, 2NI-180, Or 2NI-181. Inspect Only If Disassembled For Maintenance, Repair, Or Volumetric Examination.
Class A		NI	CNM-1205.00-63			160	0.719		
B12.050.004F	2NI-176		CN-2NI-77	QAL-14	VT-3	SS	6.000		6" Westinghouse Check Valve. Inspect One Of The Following Valves: 2NI-126, 2NI-134, 2NI-157, 2NI-160, 2NI-175, 2NI-176, 2NI-180, Or 2NI-181. Inspect Only If Disassembled For Maintenance, Repair, Or Volumetric Examination.
Class A		NI	CNM-1205.00-63			160	0.719		

CATEGORY B-M-2, Valve Body

Reactor Vessel

Catawba 2
Inservice Inspection Plan for Interval 3 Outage 4

ITEM NUMBER	ID NUMBER	SYS	ISO/DWG NUMBERS	PROC	INSP REQ	MAT/SCH	DIA/THK	CAL BLOCKS	COMMENTS
B12.050.004G Class A	2NI-180	NI	CN-2NI-145 CNM-1205.00-63	QAL-14	VT-3	SS 160	6.000 0.719		6" Westinghouse Check Valve. Inspect One Of The Following Valves: 2NI-126, 2NI-134, 2NI-157, 2NI-160, 2NI-175, 2NI-176, 2NI-180, Or 2NI-181. Inspect Only If Disassembled For Maintenance, Repair, Or Volumetric Examination.
B12.050.004H Class A	2NI-181	NI	CN-2NI-75 CNM-1205.00-63	QAL-14	VT-3	SS 160	6.000 0.719		6" Westinghouse Check Valve. Inspect One Of The Following Valves: 2NI-126, 2NI-134, 2NI-157, 2NI-160, 2NI-175, 2NI-176, 2NI-180, Or 2NI-181. Inspect Only If Disassembled For Maintenance, Repair, Or Volumetric Examination.
B12.050.005A Class A	2NI-54A	NI	CN-2NI-59 CNM-1205.00-71	QAL-14	VT-3	SS 140	10.000 1.000		10" Westinghouse Gate Valve. Inspect One Of The Following Valves: 2NI-54A, 2NI-65B, 2NI-76A, Or 2NI-88B. Inspect Only If Disassembled For Maintenance, Repair, Or Volumetric Examination.
B12.050.005B Class A	2NI-65B	NI	CN-2NI-61 CNM-1205.00-71	QAL-14	VT-3	SS 140	10.000 1.000		10" Westinghouse Gate Valve. Inspect One Of The Following Valves: 2NI-54A, 2NI-65B, 2NI-76A, Or 2NI-88B. Inspect Only If Disassembled For Maintenance, Repair, Or Volumetric Examination.
B12.050.005C Class A	2NI-76A	NI	CN-2NI-63 CNM-1205.00-71	QAL-14	VT-3	SS 140	10.000 1.000		10" Westinghouse Gate Valve. Inspect One Of The Following Valves: 2NI-54A, 2NI-65B, 2NI-76A, Or 2NI-88B. Inspect Only If Disassembled For Maintenance, Repair, Or Volumetric Examination.
B12.050.005D Class A	2NI-88B	NI	CN-2NI-57 CNM-1205.00-71	QAL-14	VT-3	SS 140	10.000 1.000		10" Westinghouse Gate Valve. Inspect One Of The Following Valves: 2NI-54A, 2NI-65B, 2NI-76A, Or 2NI-88B. Inspect Only If Disassembled For Maintenance, Repair, Or Volumetric Examination.
B12.050.006A Class A	2NI-59	NI	CN-2NI-184 CNM-1205.00-62	QAL-14	VT-3	SS 140	10.000 1.000		10" Westinghouse Check Valve. Inspect One Of The Following Valves: 2NI-59, 2NI-60, 2NI-70, 2NI-71, 2NI-81, 2NI-82, 2NI-93, Or 2NI-94. Inspect Only If Disassembled For Maintenance, Repair, Or Volumetric Examination.
B12.050.006B Class A	2NI-60	NI	CN-2NI-184 CNM-1205.00-62	QAL-14	VT-3	SS 140	10.000 1.000		10" Westinghouse Check Valve. Inspect One Of The Following Valves: 2NI-59, 2NI-60, 2NI-70, 2NI-71, 2NI-81, 2NI-82, 2NI-93, Or 2NI-94. Inspect Only If Disassembled For Maintenance, Repair, Or Volumetric Examination.

CATEGORY B-M-2, Valve Body

Reactor Vessel

ITEM NUMBER	ID NUMBER	SYS	ISO/DWG NUMBERS	PROC	INSP REQ	MAT/SCH	DIA/THK	CAL BLOCKS	COMMENTS
B12.050.006C Class A	2NI-70	NI	CN-2NI-185 CNM-1205.00-62	QAL-14	VT-3	SS 140	10.000 1.000		10" Westinghouse Check Valve. Inspect One Of The Following Valves: 2NI-59, 2NI-60, 2NI-70, 2NI-71, 2NI-81, 2NI-82, 2NI-93, Or 2NI-94. Inspect Only If Disassembled For Maintenance, Repair, Or Volumetric Examination.
B12.050.006D Class A	2NI-71	NI	CN-2NI-185 CNM-1205.00-62	QAL-14	VT-3	SS 140	10.000 1.000		10" Westinghouse Check Valve. Inspect One Of The Following Valves: 2NI-59, 2NI-60, 2NI-70, 2NI-71, 2NI-81, 2NI-82, 2NI-93, Or 2NI-94. Inspect Only If Disassembled For Maintenance, Repair, Or Volumetric Examination.
B12.050.006E Class A	2NI-81	NI	CN-2NI-55 CNM-1205.00-62	QAL-14	VT-3	SS 140	10.000 1.000		10" Westinghouse Check Valve. Inspect One Of The Following Valves: 2NI-59, 2NI-60, 2NI-70, 2NI-71, 2NI-81, 2NI-82, 2NI-93, Or 2NI-94. Inspect Only If Disassembled For Maintenance, Repair, Or Volumetric Examination.
B12.050.006F Class A	2NI-82	NI	CN-2NI-55 CNM-1205.00-62	QAL-14	VT-3	SS 140	10.000 1.000		10" Westinghouse Check Valve. Inspect One Of The Following Valves: 2NI-59, 2NI-60, 2NI-70, 2NI-71, 2NI-81, 2NI-82, 2NI-93, Or 2NI-94. Inspect Only If Disassembled For Maintenance, Repair, Or Volumetric Examination.
B12.050.006G Class A	2NI-93	NI	CN-2NI-183 CNM-1205.00-62	QAL-14	VT-3	SS 140	10.000 1.000		10" Westinghouse Check Valve. Inspect One Of The Following Valves: 2NI-59, 2NI-60, 2NI-70, 2NI-71, 2NI-81, 2NI-82, 2NI-93, Or 2NI-94. Inspect Only If Disassembled For Maintenance, Repair, Or Volumetric Examination.
B12.050.006H Class A	2NI-94	NI	CN-2NI-183 CNM-1205.00-62	QAL-14	VT-3	SS 140	10.000 1.000		10" Westinghouse Check Valve. Inspect One Of The Following Valves: 2NI-59, 2NI-60, 2NI-70, 2NI-71, 2NI-81, 2NI-82, 2NI-93, Or 2NI-94. Inspect Only If Disassembled For Maintenance, Repair, Or Volumetric Examination.
B12.050.007A Class A	2NI-125	NI	CN-2NI-94 CNM-1205.00-59	QAL-14	VT-3	SS 160	8.000 0.906		8" Westinghouse Check Valve. Inspect One Of The Following Valves: 2NI-125 Or 2N1-129. Inspect Only If Disassembled For Maintenance, Repair, Or Volumetric Examination.

CATEGORY B-M-2, Valve Body

Reactor Vessel

ITEM NUMBER	ID NUMBER	SYS	ISO/DWG NUMBERS	PROC	INSP REQ	MAT/SCH	DIA/THK	CAL BLOCKS	COMMENTS
B12.050.007B	2NI-129		CN-2NI-92	QAL-14	VT-3	SS	8.000		8" Westinghouse Check Valve. Inspect One Of The Following Valves: 2NI-125 Or 2N1-129. Inspect Only If Disassembled For Maintenance, Repair, Or Volumetric Examination.
		NI	CNM-1205.00-59			160	0.906		
Class A									

Total B12.050 Items:	**31**
Total B12 Items:	**35**

CATEGORY C-A, Pressure Retaining Welds In Pressure Vessels

Head Circumferential Welds

DUKE ENERGY CORPORATION
INSERVICE INSPECTION PLAN MANAGEMENT
Inservice Inspection Database Management System
Catawba 2
Inservice Inspection Plan for Interval 3 Outage 4

ITEM NUMBER	ID NUMBER	SYS	ISO/DWG NUMBERS	PROC	INSP REQ	MAT/SCH	DIA/THK	CAL BLOCKS	COMMENTS
C01.010.005	2SWHX-5-3		CN-ISIN3-2554-1.6	NDE-35	PT	SS	20.000		Seal Water Heat Exchanger Shell Pc.5 To Flange Pc.3. A PT may be perfomed in lieu of a UT per Note 5 in Table IWC-2500-1 of Examination Category C-A.
	Circumferential	NV	CNM 1201.06-50				0.187		
Class B					Shell to Flange				

Total C01.010 Items: 1

CATEGORY C-A, Pressure Retaining Welds In Pressure Vessels

Tubesheet-to-Shell Weld

ITEM NUMBER	ID NUMBER	SYS	ISO/DWG NUMBERS	PROC	INSP REQ	MAT/SCH	DIA/THK	CAL BLOCKS	COMMENTS
C01.020.011	2SWHX-5-6		CN-ISIN3-2554-1.6	NDE-35	PT	SS	20.000		Seal Water Heat Exchanger Shell Pc.5 To Head Pc.6. A PT may be perfomed in lieu of a UT per Note 5 in Table IWC-2500-1 of Examination Category C-A.
	Circumferential	NV	CNM 1201.06-50				0.187		
Class B					Shell to Head				

Total C01.020 Items:	**1**
Total C01 Items:	**2**

CATEGORY C-B, Pressure Retaining Nozzle Welds In Vessels

Nozzles Without Reinforcing Plate in Vessels > 1/2 in. Nom. Thickness

ITEM NUMBER	ID NUMBER	SYS	ISO/DWG NUMBERS	PROC	INSP REQ	MAT/SCH	DIA/THK	CAL BLOCKS	COMMENTS
****** Nozzles Without Reinforcing Plate In Vessels > 1/2 in. Nom. Thickness ******									
C02.011.001	2SWHX-5-A		CNM 1201.06-50	NDE-35	PT	SS	4.000		Seal Water Heat Exchanger Inlet Nozzle Pc.5 To Shell Pc.A.
	Circumferential	NV	CN-ISIN3-2554-1.6				0.237		
Class B					Nozzle to Shell				
C02.011.002	2SWHX-5-B		CNM 1201.06-50	NDE-35	PT	SS	4.000		Seal Water Heat Exchanger Outlet Nozzle Pc.5 To Shell Pc.B.
	Circumferential	NV	CN-ISIN3-2554-1.6				0.237		
Class B					Nozzle to Shell				

Total C02.011 Items: 2

CATEGORY C-B, Pressure Retaining Nozzle Welds In Vessels

Nozzles Without Reinforcing Plate in Vessels > 1/2 in. Nom. Thickness

ITEM NUMBER	ID NUMBER	SYS	ISO/DWG NUMBERS	PROC	INSP REQ	MAT/SCH	DIA/THK	CAL BLOCKS	COMMENTS
**** Nozzle Inside Radius Section ****									
C02.021.004	2RHRHXA-5-A		CNM 1201.06-38	NDE-3630	UT	SS	14.000	50432	Residual Heat Removal Heat Exchanger 2A Inlet
	Circumferential	ND	CN-ISIN3-2561-1.1				0.375		Nozzle Pc.5 To Shell Pc.A.
Class B					Nozzle to Shell				
C02.021.004A	2ARHRHX-5-A		CNM 1201.06-38	NDE-35	PT	SS	14.000		Residual Heat Removal Heat Exchanger 2A Inlet
	Circumferential	ND	CN-ISIN3-2561-1.1				0.375		Nozzle Pc.5 To Shell Pc.A.
Class B					Nozzle to Shell				
C02.021.005	2ARHRHX-5-B		CNM 1201.06-38	NDE-3630	UT	SS	14.000	50432	Residual Heat Removal Heat Exchanger 2A Outlet
	Circumferential	ND	CN-ISIN3-2561-1.1				0.375		Nozzle Pc.5 To Shell Pc.B.
Class B					Nozzle to Shell				
C02.021.005A	2ARHRHX-5-B		CNM 1201.06-38	NDE-35	PT	SS	14.000		Residual Heat Removal Heat Exchanger 2A Outlet
	Circumferential	ND	CN-ISIN3-2561-1.1				0.375		Nozzle Pc.5 To Shell Pc.B.
Class B					Nozzle to Shell				

Total C02.021 Items: 4

Total C02 Items: 6

CATEGORY C-C, Welded Attachments For Vessels, Piping, Pumps, And Valves

Piping

ITEM NUMBER	ID NUMBER	SYS	ISO/DWG NUMBERS	PROC	INSP REQ	MAT/SCH	DIA/THK	CAL BLOCKS	COMMENTS
****** Welded Attachments ******									
C03.010.024	2SWHX-SUPP		CNM 1201.06-50	NDE-35	PT	SS	0.000		Seal Water Heat Exchanger Shell Pc.5 To Support Pc.31 and Pc.32 (One Each Side).
	Circumferential	NV	CN-ISIN3-2554-1.6				0.750		
Class B					Shell to Support				

Total C03.010 Items: 1

CATEGORY C-C, Welded Attachments For Vessels, Piping, Pumps, And Valves

Pumps

ITEM NUMBER	ID NUMBER	SYS	ISO/DWG NUMBERS	PROC	INSP REQ	MAT/SCH	DIA/THK	CAL BLOCKS	COMMENTS
****** Welded Attachments ******									
C03.020.014	2-R-CF-1563		CN-2491-CF003	NDE-25	MT	CS	18.000		
	Spring Hgr	CF	CN-ISIN3-2591-1.1				0.750		
Class B									
C03.020.042	2-R-NI-1680		CN-2491-NI066	NDE-35	PT	SS	6.000		
	Rigid Restraint	NI	CN-ISIN3-2562-1.3				0.719		
Class B									

Total C03.020 Items:	**2**
Total C03 Items:	**3**

CATEGORY C-F-1, Pressure Retaining Welds In Austenitic SS Or High Alloy Piping

Piping Welds > 1/5 in. Nom Wall for Piping >= NPS 2 and <= NPS 4

ITEM NUMBER	ID NUMBER	SYS	ISO/DWG NUMBERS	PROC	INSP REQ	MAT/SCH	DIA/THK	CAL BLOCKS	COMMENTS
**** Piping Welds > 1/5 in. Nom Wall For Piping >= NPS 2 And <= NPS 4 ****									
C05.011.001	2CA59-22		CN-2CA-59	PDI-UT-10	UT	SS-CS	6.000	50331	
	Circumferential	CA	CN-ISIN3-2592-1.1			80	0.432	50319	
Class B					Pipe to				
	Dissimilar				Elbow				
C05.011.001A	2CA59-22		CN-2CA-59	NDE-35	PT	SS-CS	6.000		
	Longitudinal	CA	CN-ISIN3-2592-1.1			80	0.432		
Class B					Pipe to				
	Dissimilar				Elbow				
C05.011.002	2CA59-23		CN-2CA-59	NDE-600	UT	SS	6.000	Component	Depending on the examiners qualifications,
	Circumferential	CA	CN-ISIN3-2592-1.1			80	0.432		Procedure PDI-UT-2 may be used in lieu of
Class B					Elbow to				NDE-600. If PDI-UT-2 is used, Calibration Block
					Pipe				PDI-UT-2-C may be used.
C05.011.002A	2CA59-23		CN-2CA-59	NDE-35	PT	SS	6.000		
	Circumferential	CA	CN-ISIN3-2592-1.1			80	0.432		
Class B					Elbow to				
					Pipe				
C05.011.003	2CA59-25		CN-2CA-59	NDE-600	UT	SS	6.000	Component	Depending on the examiners qualifications,
	Circumferential	CA	CN-ISIN3-2592-1.1			80	0.432		Procedure PDI-UT-2 may be used in lieu of
Class B					Elbow to				NDE-600. If PDI-UT-2 is used, Calibration Block
					Pipe				PDI-UT-2-C may be used.
C05.011.003A	2CA59-25		CN-2CA-59	NDE-35	PT	SS	6.000		
	Circumferential	CA	CN-ISIN3-2592-1.1			80	0.432		
Class B					Elbow to				
					Pipe				
C05.011.016	2CA72-53		CN-2CA-72	NDE-600	UT	SS	6.000	Component	Depending on the examiners qualifications,
	Circumferential	CA	CN-ISIN3-2592-1.1			80	0.432		Procedure PDI-UT-2 may be used in lieu of
Class B					Tee to				NDE-600. If PDI-UT-2 is used, Calibration Block
					Elbow				PDI-UT-2-C may be used.
C05.011.016A	2CA72-53		CN-2CA-72	NDE-35	PT	SS	6.000		
	Circumferential	CA	CN-ISIN3-2592-1.1			80	0.432		
Class B					Tee to				
					Elbow				

DUKE ENERGY CORPORATION
INSERVICE INSPECTION PLAN MANAGEMENT
Inservice Inspection Database Management System
Catawba 2
Inservice Inspection Plan for Interval 3 Outage 4

CATEGORY C-F-1, Pressure Retaining Welds In Austenitic SS Or High Alloy Piping

Piping Welds > 1/5 in. Nom Wall for Piping >= NPS 2 and <= NPS 4

ITEM NUMBER	ID NUMBER	SYS	ISO/DWG NUMBERS	PROC	INSP REQ	MAT/SCH	DIA/THK	CAL BLOCKS	COMMENTS
C05.011.017 Class B	2CA72-58 Circumferential	CA	CN-2CA-72 CN-ISIN3-2592-1.1	NDE-600	UT Elbow to Pipe	SS 80	6.000 0.432	Component	Depending on the examiners qualifications, Procedure PDI-UT-2 may be used in lieu of NDE-600. If PDI-UT-2 is used, Calibration Block PDI-UT-2-C may be used.
C05.011.017A Class B	2CA72-58 Circumferential	CA	CN-2CA-72 CN-ISIN3-2592-1.1	NDE-35	PT Pipe	SS 80	6.000 0.432		
C05.011.018 Class B	2CA72-60 Circumferential	CA	CN-2CA-72 CN-ISIN3-2592-1.1	NDE-600	UT Elbow to Pipe	SS 80	6.000 0.432	Component	Depending on the examiners qualifications, Procedure PDI-UT-2 may be used in lieu of NDE-600. If PDI-UT-2 is used, Calibration Block PDI-UT-2-C may be used.
C05.011.018A Class B	2CA72-60 Circumferential	CA	CN-2CA-72 CN-ISIN3-2592-1.1	NDE-35	PT Elbow to Pipe	SS 80	6.000 0.432		
C05.011.331 Class B	2NI86-2 Circumferential	NI	CN-2NI-86 CN-ISIN3-2562-1.3	NDE-600	UT Elbow to Pipe	SS 160	6.000 0.719	Component	Depending on the examiners qualifications, Procedure PDI-UT-2 may be used in lieu of NDE-600. If PDI-UT-2 is used, Calibration Block PDI-UT-2-C may be used.
C05.011.331A Class B	2NI86-2 Circumferential	NI	CN-2NI-86 CN-ISIN3-2562-1.3	NDE-35	PT Elbow to Pipe	SS 160	6.000 0.719		
C05.011.332 Class B	2NI86-3 Circumferential	NI	CN-2NI-86 CN-ISIN3-2562-1.3	NDE-600	UT Pipe to Elbow	SS 160	6.000 0.719	Component	Depending on the examiners qualifications, Procedure PDI-UT-2 may be used in lieu of NDE-600. If PDI-UT-2 is used, Calibration Block PDI-UT-2-C may be used.
C05.011.332A Class B	2NI86-3 Circumferential	NI	CN-2NI-86 CN-ISIN3-2562-1.3	NDE-35	PT Pipe to Elbow	SS 160	6.000 0.719		
C05.011.333 Class B	2NI86-12 Circumferential	NI	CN-2NI-86 CN-ISIN3-2562-1.3	NDE-600	UT Elbow to Pipe	SS 160	6.000 0.719	Component	Depending on the examiners qualifications, Procedure PDI-UT-2 may be used in lieu of NDE-600. If PDI-UT-2 is used, Calibration Block PDI-UT-2-C may be used.

CATEGORY C-F-1, Pressure Retaining Welds In Austenitic SS Or High Alloy Piping

Piping Welds > 1/5 in. Nom Wall for Piping >= NPS 2 and <= NPS 4

ITEM NUMBER	ID NUMBER	SYS	ISO/DWG NUMBERS	PROC	INSP REQ	MAT/SCH	DIA/THK	CAL BLOCKS	COMMENTS
C05.011.333A	2NI86-12		CN-2NI-86	NDE-35	PT	SS	6.000		
	Circumferential	NI	CN-ISIN3-2562-1.3			160	0.719		
Class B					Elbow to Pipe				
C05.011.334	2NI86-13		CN-2NI-86	NDE-600	UT	SS	6.000	Component	Depending on the examiners qualifications, Procedure PDI-UT-2 may be used in lieu of NDE-600. If PDI-UT-2 is used, Calibration Block PDI-UT-2-C may be used.
	Circumferential	NI	CN-ISIN3-2562-1.3			160	0.719		
Class B					Elbow to Elbow				
C05.011.334A	2NI86-13		CN-2NI-86	NDE-35	PT	SS	6.000		
	Circumferential	NI	CN-ISIN3-2562-1.3			160	0.719		
Class B					Elbow to Elbow				
C05.011.335	2NI86-15		CN-2NI-86	NDE-600	UT	SS	6.000	Component	Depending on the examiners qualifications, Procedure PDI-UT-2 may be used in lieu of NDE-600. If PDI-UT-2 is used, Calibration Block PDI-UT-2-C may be used.
	Circumferential	NI	CN-ISIN3-2562-1.3			160	0.719		
Class B					Elbow to Pipe				
C05.011.335A	2NI86-15		CN-2NI-86	NDE-35	PT	SS	6.000		
	Circumferential	NI	CN-ISIN3-2562-1.3			160	0.719		
Class B					Elbow to Pipe				
C05.011.336	2NI86-16		CN-2NI-86	NDE-600	UT	SS	6.000	Component	Depending on the examiners qualifications, Procedure PDI-UT-2 may be used in lieu of NDE-600. If PDI-UT-2 is used, Calibration Block PDI-UT-2-C may be used.
	Circumferential	NI	CN-ISIN3-2562-1.3			160	0.719		
Class B					Elbow to Elbow				
C05.011.336A	2NI86-16		CN-2NI-86	NDE-35	PT	SS	6.000		
	Circumferential	NI	CN-ISIN3-2562-1.3			160	0.719		
Class B					Elbow to Elbow				
C05.011.337	2NI86-18		CN-2NI-86	NDE-600	UT	SS	6.000	Component	Depending on the examiners qualifications, Procedure PDI-UT-2 may be used in lieu of NDE-600. If PDI-UT-2 is used, Calibration Block PDI-UT-2-C may be used.
	Circumferential	NI	CN-ISIN3-2562-1.3			160	0.719		
Class B					Elbow to Pipe				
C05.011.337A	2NI86-18		CN-2NI-86	NDE-35	PT	SS	6.000		
	Circumferential	NI	CN-ISIN3-2562-1.3			160	0.719		
Class B					Elbow to Pipe				

CATEGORY C-F-1, Pressure Retaining Welds In Austenitic SS Or High Alloy Piping

Piping Welds > 1/5 in. Nom Wall for Piping >= NPS 2 and <= NPS 4

Catawba 2

Inservice Inspection Plan for Interval 3 Outage 4

ITEM NUMBER	ID NUMBER	SYS	ISO/DWG NUMBERS	PROC	INSP REQ	MAT/SCH	DIA/THK	CAL BLOCKS	COMMENTS
C05.011.338	2NI86-19		CN-2NI-86	NDE-600	UT	SS	6.000	Component	Depending on the examiners qualifications, Procedure PDI-UT-2 may be used in lieu of NDE-600. If PDI-UT-2 is used, Calibration Block PDI-UT-2-C may be used.
	Circumferential	NI	CN-ISIN3-2562-1.3			160	0.719		
Class B					Pipe to Elbow				
C05.011.338A	2NI86-19		CN-2NI-86	NDE-35	PT	SS	6.000		
	Circumferential	NI	CN-ISIN3-2562-1.3			160	0.719		
Class B					Pipe to Elbow				
C05.011.339	2NI86-20		CN-2NI-86	NDE-600	UT	SS	6.000	Component	Depending on the examiners qualifications, Procedure PDI-UT-2 may be used in lieu of NDE-600. If PDI-UT-2 is used, Calibration Block PDI-UT-2-C may be used.
	Circumferential	NI	CN-ISIN3-2562-1.3			160	0.719		
Class B					Elbow to Pipe				
C05.011.339A	2NI86-20		CN-2NI-86	NDE-35	PT	SS	6.000		
	Circumferential	NI	CN-ISIN3-2562-1.3			160	0.719		
Class B					Elbow to Pipe				
C05.011.402	2BNSHX-NOZA-66-65		CNM 1201.06-0122	NDE-600	UT	SS	0.000	Component	Containment Spray Heat Exchanger 2B Inlet Nozzle A Plate Item 66 to Inlet Nozzle A Neck Item 65. Depending on the examiners qualifications, Procedure PDI-UT-2 may be used in lieu of NDE-600. If PDI-UT-2 is used, Calibration Block PDI-UT-2-C may be used.
	Circumferential	NS	CN-ISIN3-2563-1.0			STD	0.375		
Class B	Term end				Nozzle Plate to Nozzle Neck				
C05.011.402A	2BNSHX-NOZA-66-65		CNM 1201.06-0122	NDE-35	PT	SS	0.000		Containment Spray Heat Exchanger 2B Inlet Nozzle A Plate Item 66 to Inlet Nozzle A Neck Item 65.
	Circumferential	NS	CN-ISIN3-2563-1.0			STD	0.375		
Class B	Term end				Nozzle Plate to Nozzle Neck				
C05.011.403	2BNSHX-NOZB-66-65		CNM 1201.06-0122	NDE-600	UT	SS	0.000	Component	Containment Spray Heat Exchanger 2B Outlet Nozzle B Plate Item 66 to Inlet Nozzle B Neck Item 65. Depending on the examiners qualifications, Procedure PDI-UT-2 may be used in lieu of NDE-600. If PDI-UT-2 is used, Calibration Block PDI-UT-2-C may be used.
	Circumferential	NS	CN-ISIN3-2563-1.0			STD	0.375		
Class B	Term end				Nozzle Plate to Nozzle Neck				
C05.011.403A	2BNSHX-NOZB-66-65		CNM 1201.06-0122	NDE-35	PT	SS	0.000		Containment Spray Heat Exchanger 2B Outlet Nozzle B Plate Item 66 to Inlet Nozzle B Neck Item 65.
	Circumferential	NS	CN-ISIN3-2563-1.0			STD	0.375		
Class B	Term end				Nozzle Plate to Nozzle Neck				

DUKE ENERGY CORPORATION
INSERVICE INSPECTION PLAN MANAGEMENT
Inservice Inspection Database Management System

Catawba 2

Inservice Inspection Plan for Interval 3 Outage 4

CATEGORY C-F-1, Pressure Retaining Welds In Austenitic SS Or High Alloy Piping

Piping Welds > 1/5 in. Nom Wall for Piping >= NPS 2 and <= NPS 4

ITEM NUMBER	ID NUMBER	SYS	ISO/DWG NUMBERS	PROC	INSP REQ	MAT/SCH	DIA/THK	CAL BLOCKS	COMMENTS

Total C05.011 Items: 34

CATEGORY C-F-1, Pressure Retaining Welds In Austenitic SS Or High Alloy Piping

Socket Welds

ITEM NUMBER	ID NUMBER	SYS	ISO/DWG NUMBERS	PROC	INSP REQ	MAT/SCH	DIA/THK	CAL BLOCKS	COMMENTS
C05.021.230 Class B	2NV20-1 Circumferential	NV	CN-2NV-20 CN-ISIN3-2554-1.1	NDE-600	UT Elbow to Pipe	SS 40	3.000 0.216	Component	Depending on the examiners qualifications, Procedure PDI-UT-2 may be used in lieu of NDE-600. If PDI-UT-2 is used, Calibration Block PDI-UT-2-C may be used.
C05.021.230A Class B	2NV20-1 Circumferential	NV	CN-2NV-20 CN-ISIN3-2554-1.1	NDE-35	PT Pipe	SS 40	3.000 0.216		
C05.021.231 Class B	2NV20-2 Circumferential	NV	CN-2NV-20 CN-ISIN3-2554-1.1	NDE-600	UT Pipe to Elbow	SS 40	3.000 0.216	Component	Depending on the examiners qualifications, Procedure PDI-UT-2 may be used in lieu of NDE-600. If PDI-UT-2 is used, Calibration Block PDI-UT-2-C may be used.
C05.021.231A Class B	2NV20-2 Circumferential	NV	CN-2NV-20 CN-ISIN3-2554-1.1	NDE-35	PT Pipe to Elbow	SS 40	3.000 0.216		
C05.021.232 Class B	2NV20-5 Circumferential	NV	CN-2NV-20 CN-ISIN3-2554-1.1	NDE-600	UT Pipe to Valve 2NV-204	SS 40	4.000 0.237	Component	Depending on the examiners qualifications, Procedure PDI-UT-2 may be used in lieu of NDE-600. If PDI-UT-2 is used, Calibration Block PDI-UT-2-C may be used.
C05.021.232A Class B	2NV20-5 Circumferential	NV	CN-2NV-20 CN-ISIN3-2554-1.1	NDE-35	PT Pipe to Valve 2NV-204	SS 40	4.000 0.237		
C05.021.233 Class B	2NV20-7 Circumferential	NV	CN-2NV-20 CN-ISIN3-2554-1.1	NDE-600	UT Tee to Pipe	SS 40	4.000 0.237	Component	Depending on the examiners qualifications, Procedure PDI-UT-2 may be used in lieu of NDE-600. If PDI-UT-2 is used, Calibration Block PDI-UT-2-C may be used.
C05.021.233A Class B	2NV20-7 Circumferential	NV	CN-2NV-20 CN-ISIN3-2554-1.1	NDE-35	PT Tee to Pipe	SS 40	4.000 0.237		

CATEGORY C-F-1, Pressure Retaining Welds In Austenitic SS Or High Alloy Piping

Socket Welds

ITEM NUMBER	ID NUMBER	SYS	ISO/DWG NUMBERS	PROC	INSP REQ	MAT/SCH	DIA/THK	CAL BLOCKS	COMMENTS
C05.021.234	2NV20-8		CN-2NV-20	NDE-600	UT	SS	4.000	Component	Depending on the examiners qualifications, Procedure PDI-UT-2 may be used in lieu of NDE-600. If PDI-UT-2 is used, Calibration Block PDI-UT-2-C may be used.
	Circumferential	NV	CN-ISIN3-2554-1.1			40	0.237		
Class B					Pipe to Tee				
C05.021.234A	2NV20-8		CN-2NV-20	NDE-35	PT	SS	4.000		
	Circumferential	NV	CN-ISIN3-2554-1.1			40	0.237		
Class B					Pipe to Tee				

Total C05.021 Items: 10

CATEGORY C-F-1, Pressure Retaining Welds In Austenitic SS Or High Alloy Piping

Pipe Branch Connections of Branch Piping >= NPS 2

ITEM NUMBER	ID NUMBER	SYS	ISO/DWG NUMBERS	PROC	INSP REQ	MAT/SCH	DIA/THK	CAL BLOCKS	COMMENTS
C05.030.101	2NV16-10		CN-2NV-16	NDE-35	PT	SS	2.000		
	Socket	NV	CN-ISIN3-2554-1.7			160	0.344		
Class B					Pipe to Flange				
C05.030.102	2NV16-11		CN-2NV-16	NDE-35	PT	SS	2.000		
	Socket	NV	CN-ISIN3-2554-1.7			160	0.344		
Class B					Flange to Pipe				
C05.030.103	2NV16-12		CN-2NV-16	NDE-35	PT	SS	2.000		
	Socket	NV	CN-ISIN3-2554-1.7			160	0.344		
Class B					Pipe to Valve 2NV288				
C05.030.104	2NV16-14		CN-2NV-16	NDE-35	PT	SS	2.000		
	Socket	NV	CN-ISIN3-2554-1.7			160	0.344		
Class B					Pipe to Half Coupling				

Total C05.030 Items: 4

CATEGORY C-F-2, Pressure Retaining Welds In Carbon Or Low Alloy Steel Piping

Piping Welds > 1/5 in. Nom Wall for Piping >= NPS 2 and <= NPS 4

ITEM NUMBER	ID NUMBER	SYS	ISO/DWG NUMBERS	PROC	INSP REQ	MAT/SCH	DIA/THK	CAL BLOCKS	COMMENTS
C05.051.005	2CA67-1		CN-2CA-67	NDE-600	UT	CS	6.000	Component	Steam Generator 2B. Depending on the examiners qualifications, Procedure PDI-UT-1 may be used in lieu of NDE-600. If PDI-UT-1 is used, Calibration Block PDI-UT-1-C may be used.
	Circumferential	CA	CN-ISIN3-2592-1.1			80	0.432		
Class B	Term end				Elbow to Nozzle				
C05.051.005A	2CA67-1		CN-2CA-67	NDE-25	MT	CS	6.000		Steam Generator 2B.
	Circumferential	CA	CN-ISIN3-2592-1.1			80	0.432		
Class B	Term end				Elbow to Nozzle				
C05.051.010	2CA93-9		CN-2CA-93	NDE-600	UT	CS	6.000	Component	Depending on the examiners qualifications, Procedure PDI-UT-1 may be used in lieu of NDE-600. If PDI-UT-1 is used, Calibration Block PDI-UT-1-C may be used.
	Circumferential	CA	CN-ISIN3-2592-1.1			80	0.432		
Class B					Elbow to Pipe				
C05.051.010A	2CA93-9		CN-2CA-93	NDE-25	MT	CS	6.000		
	Circumferential	CA	CN-ISIN3-2592-1.1			80	0.432		
Class B					Elbow to Pipe				
C05.051.057	2CF66-29		CN-2CF-66	NDE-600	UT	CS	16.000	Component	Steam Generator 2C. Depending on the examiners qualifications, Procedure PDI-UT-1 may be used in lieu of NDE-600. If PDI-UT-1 is used, Calibration Block PDI-UT-1-C may be used.
	Circumferential	CF	CN-ISIN3-2591-1.1			80	0.844		
Class B	Term end				Elbow to Nozzle				
C05.051.057A	2CF66-29		CN-2CF-66	NDE-25	MT	CS	16.000		Steam Generator 2C.
	Circumferential	CF	CN-ISIN3-2591-1.1			80	0.844		
Class B	Term end				Elbow to Nozzle				
C05.051.058	2CF66-38		CN-2CF-66	NDE-600	UT	CS	16.000	Component	Depending on the examiners qualifications, Procedure PDI-UT-1 may be used in lieu of NDE-600. If PDI-UT-1 is used, Calibration Block PDI-UT-1-C may be used.
	Circumferential	CF	CN-ISIN3-2591-1.1			80	0.844		
Class B					Pipe to Elbow				
C05.051.058A	2CF66-38		CN-2CF-66	NDE-25	MT	CS	16.000		
	Circumferential	CF	CN-ISIN3-2591-1.1			80	0.844		
Class B					Pipe to Elbow				

CATEGORY C-F-2, Pressure Retaining Welds In Carbon Or Low Alloy Steel Piping

Piping Welds > 1/5 in. Nom Wall for Piping >= NPS 2 and <= NPS 4

ITEM NUMBER	ID NUMBER	SYS	ISO/DWG NUMBERS	PROC	INSP REQ	MAT/SCH	DIA/THK	CAL BLOCKS	COMMENTS
C05.051.059	2CF67-26		CN-2CF-67	NDE-600	UT	CS	16.000	Component	Steam Generator 2D. Depending on the examiners qualifications, Procedure PDI-UT-1 may be used in lieu of NDE-600. If PDI-UT-1 is used, Calibration Block PDI-UT-1-C may be used.
	Circumferential	CF	CN-ISIN3-2591-1.1			80	0.844		
Class B	Term end				Elbow to Nozzle				
C05.051.059A	2CF67-26		CN-2CF-67	NDE-25	MT	CS	16.000		Steam Generator 2D.
	Circumferential	CF	CN-ISIN3-2591-1.1			80	0.844		
Class B	Term end				Elbow to Nozzle				
C05.051.060	2CF67-39		CN-2CF-67	NDE-600	UT	CS	16.000	Component	Depending on the examiners qualifications, Procedure PDI-UT-1 may be used in lieu of NDE-600. If PDI-UT-1 is used, Calibration Block PDI-UT-1-C may be used.
	Circumferential	CF	CN-ISIN3-2591-1.1			80	0.844		
Class B					Elbow to Pipe				
C05.051.060A	2CF67-39		CN-2CF-67	NDE-25	MT	CS	16.000		
	Circumferential	CF	CN-ISIN3-2591-1.1			80	0.844		
Class B					Elbow to Pipe				
C05.051.105	2SM14-2		CN-2SM-14	NDE-600	UT	CS	34.000	Component	Depending on the examiners qualifications, Procedure PDI-UT-1 may be used in lieu of NDE-600. If PDI-UT-1 is used, Calibration Block PDI-UT-1-C may be used.
	Circumferential	SM	CN-ISIN3-2593-1.0				1.375		
Class B					Pipe to Elbow				
C05.051.105A	2SM14-2		CN-2SM-14	NDE-25	MT	CS	34.000		
	Circumferential	SM	CN-ISIN3-2593-1.0				1.375		
Class B					Pipe to Elbow				
C05.051.106	2SM14-3		CN-2SM-14	NDE-600	UT	CS	34.000	Component	Depending on the examiners qualifications, Procedure PDI-UT-1 may be used in lieu of NDE-600. If PDI-UT-1 is used, Calibration Block PDI-UT-1-C may be used.
	Circumferential	SM	CN-ISIN3-2593-1.0				1.375		
Class B					Elbow to Pipe				
C05.051.106A	2SM14-3		CN-2SM-14	NDE-25	MT	CS	34.000		
	Circumferential	SM	CN-ISIN3-2593-1.0				1.375		
Class B					Elbow to Pipe				
C05.051.154	2SV6-4		CN-2SV-6	NDE-600	UT	CS	6.000	Component	Depending on the examiners qualifications, Procedure PDI-UT-1 may be used in lieu of NDE-600. If PDI-UT-1 is used, Calibration Block PDI-UT-1-C may be used.
	Circumferential	SV	CN-ISIN3-2593-1.0			80	0.432		
Class B					Pipe to Elbow				

DUKE ENERGY CORPORATION
INSERVICE INSPECTION PLAN MANAGEMENT
Inservice Inspection Database Management System

CATEGORY C-F-2, Pressure Retaining Welds In Carbon Or Low Alloy Steel Piping

Piping Welds > 1/5 in. Nom Wall for Piping >= NPS 2 and <= NPS 4

Catawba 2

Inservice Inspection Plan for Interval 3 Outage 4

ITEM NUMBER	ID NUMBER	SYS	ISO/DWG NUMBERS	PROC	INSP REQ	MAT/SCH	DIA/THK	CAL BLOCKS	COMMENTS
C05.051.154A	2SV6-4		CN-2SV-6	NDE-25	MT	CS	6.000		
	Circumferential	SV	CN-ISIN3-2593-1.0			80	0.432		
Class B					Pipe to Elbow				

Total C05.051 Items: 18

CATEGORY C-F-2, Pressure Retaining Welds In Carbon Or Low Alloy Steel Piping

Socket Welds

ITEM NUMBER	ID NUMBER	SYS	ISO/DWG NUMBERS	PROC	INSP REQ	MAT/SCH	DIA/THK	CAL BLOCKS	COMMENTS
C05.061.004 Class B	2CA105-4 Circumferential	CA	CN-2CA-105 CN-ISIN3-2592-1.1	NDE-600	UT Pipe to Elbow	CS 80	4.000 0.337	Component	Depending on the examiners qualifications, Procedure PDI-UT-1 may be used in lieu of NDE-600. If PDI-UT-1 is used, Calibration Block PDI-UT-1-C may be used.
C05.061.004A Class B	2CA105-4 Circumferential	CA	CN-2CA-105 CN-ISIN3-2592-1.1	NDE-25	MT Pipe to Elbow	CS 80	4.000 0.337		
C05.061.005 Class B	2CA105-5 Circumferential	CA	CN-2CA-105 CN-ISIN3-2592-1.1	NDE-600	UT Elbow to Pipe	CS 80	4.000 0.337	Component	Depending on the examiners qualifications, Procedure PDI-UT-1 may be used in lieu of NDE-600. If PDI-UT-1 is used, Calibration Block PDI-UT-1-C may be used.
C05.061.005A Class B	2CA105-5 Circumferential	CA	CN-2CA-105 CN-ISIN3-2592-1.1	NDE-25	MT Elbow to Pipe	CS 80	4.000 0.337		
C05.061.006 Class B	2CA107-2 Circumferential	CA	CN-2CA-107 CN-ISIN3-2592-1.1	NDE-600	UT Tee to Flange	CS 160	4.000 0.531	Component	Depending on the examiners qualifications, Procedure PDI-UT-1 may be used in lieu of NDE-600. If PDI-UT-1 is used, Calibration Block PDI-UT-1-C may be used.
C05.061.006A Class B	2CA107-2 Circumferential	CA	CN-2CA-107 CN-ISIN3-2592-1.1	NDE-25	MT Tee to Flange	CS 160	4.000 0.531		

Total C05.061 Items: 6

Total C05 Items: 72

CATEGORY C-G, Pressure Retaining Welds In Pumps And Valves

Pressure Vessels

ITEM NUMBER	ID NUMBER	SYS	ISO/DWG NUMBERS	PROC	INSP REQ	MAT/SCH	DIA/THK	CAL BLOCKS	COMMENTS
****** Welded Attachments ******									
C06.020.004	2NI-9A		CNM 1205.00-83	NDE-35	PT	SS	4.000		Valve Body Weld - Valve Numbers in Valve Group 2NI-9A, 2NI-10B.
	Circumferential	NI	CN-ISIN3-2562-1.0				0.867		
Class B					Valve Body to Bonnet				
C06.020.006	2NI-117		CNM 1205.00-90	NDE-35	PT	SS	4.000		Valve Body Weld - Valve Numbers in Valve Group 2NI-117, 2NI-149.
	Circumferential	NI	CN-ISIN3-2562-1.2				0.534		
Class B					Valve Body to Bonnet				
C06.020.008	2NI-121A		CNM 1205.00-87	NDE-35	PT	SS	4.000		Valve Body Weld - Valve Numbers in Valve Group 2NI-121A, 2NI-152B.
	Circumferential	NI	CN-ISIN3-2562-1.2				0.867		
Class B					Valve Body to Bonnet				
C06.020.012	2NS-98		CNM 1205.00-152	NDE-35	PT	SS	8.000		Valve Body Weld - Valve Numbers in Valve Group 2NS-98, 2NS-99.
	Circumferential	NS	CN-ISIN3-2563-1.0				0.477		
Class B					Valve Body to Bonnet				
C06.020.014	2NV-292		CNM 1205.00-82	NDE-35	PT	SS	4.000		Valve Body Weld - Valve Numbers in Valve Group 2NV-272, 2NV-292, 2NV-485, 2NV-488.
	Circumferential	NV	CN-ISIN3-2554-1.7				0.867		
Class B					Valve Body to Bonnet				

Total C06.020 Items: 5

Total C06 Items: 5

CATEGORY D-A, Welded Attachments For Vessels, Piping, Pumps, And Valves

Pumps

ITEM NUMBER	ID NUMBER	SYS	ISO/DWG NUMBERS	PROC	INSP REQ	MAT/SCH	DIA/THK	CAL BLOCKS	COMMENTS
****** Welded Attachments ******									
D01.020.021	2-R-RN-0012		CN-2492-RN105	QAL-13	VT-1	NA	18.000		Inspect with F01.030.156.
	Rigid Support	RN	CN-ISIN3-2574-2.4				0.750		
Class C									

Total D01.020 Items: 1

Total D01 Items: 1

CATEGORY F-A, Supports

Class 1 Piping Supports

ITEM NUMBER	ID NUMBER	SYS	ISO/DWG NUMBERS	PROC	INSP REQ	MAT/SCH	DIA/THK	CAL BLOCKS	COMMENTS
****** Category A, One-Directional ******									
F01.010.005	2-R-NC-1512		CN-2491-NC039	QAL-14	VT-3	NA	6.000		
	Rigid Support	NC	CN-ISIN3-2553-1.1				0.000		
Class A									
F01.010.006	2-R-NC-1514		CN-2491-NC039	QAL-14	VT-3	NA	6.000		
	Rigid Support	NC	CN-ISIN3-2553-1.1				0.000		
Class A									
F01.010.094	2-R-NV-1070		CN-2491-NV095	QAL-14	VT-3	NA	2.000		
	Rigid Support	NV	CN-ISIN3-2554-1.5				0.000		
Class A									
F01.010.095	2-R-NV-1072		CN-2491-NV095	QAL-14	VT-3	NA	2.000		
	Rigid Support	NV	CN-ISIN3-2554-1.5				0.000		
Class A									
F01.010.096	2-R-NV-1075		CN-2491-NV095	QAL-14	VT-3	NA	2.000		
	Rigid Support	NV	CN-ISIN3-2554-1.5				0.000		
Class A									
Total F01.010 Items:	**5**								
****** Category B, Multi-Directional ******									
F01.011.031	2-R-ND-1005		CN-2491-ND001	QAL-14	VT-3	NA	12.000		
	Rigid Restraint	ND	CN-ISIN3-2561-1.1				0.000		
Class A									
F01.011.032	2-R-ND-1006		CN-2491-ND001	QAL-14	VT-3	NA	12.000		
	Rigid Restraint	ND	CN-ISIN3-2561-1.1				0.000		
Class A									
F01.011.053	2-R-NI-1548		CN-2491-NI067	QAL-14	VT-3	NA	8.000		
	Rigid Restraint	NI	CN-ISIN3-2562-1.2				0.000		
Class A									

CATEGORY F-A, Supports

Class 1 Piping Supports

ITEM NUMBER	ID NUMBER	SYS	ISO/DWG NUMBERS	PROC	INSP REQ	MAT/SCH	DIA/THK	CAL BLOCKS	COMMENTS
F01.011.054	2-R-NI-1549		CN-2491-NI067	QAL-14	VT-3	NA	8.000		
	Rigid Restraint	NI	CN-ISIN3-2562-1.2				0.000		
Class A									

Total F01.011 Items: 4

****** Category C, Thermal Movement ******

F01.012.003	2-R-NC-1503		CN-2491-NC039	QAL-14	VT-3	NA	4.000		
	Constant Support	NC	CN-ISIN3-2553-1.1				0.000		
Class A									
F01.012.004	2-R-NC-1504		CN-2491-NC039	QAL-14	VT-3	NA	6.000		
	Constant Support	NC	CN-ISIN3-2553-1.1				0.000		
Class A									
F01.012.005	2-R-NC-1505		CN-2491-NC039	QAL-14	VT-3	NA	6.000		
	Spring Hgr	NC	CN-ISIN3-2553-1.1				0.000		
Class A									
F01.012.006	2-R-NC-1518		CN-2491-NC039	QAL-14	VT-3	NA	6.000		
	Mech Snubber	NC	CN-ISIN3-2553-1.1				0.000		
Class A									
F01.012.007	2-R-NC-1520		CN-2491-NC039	QAL-14	VT-3	NA	6.000		
	Mech Snubber	NC	CN-ISIN3-2553-1.1				0.000		
Class A									
F01.012.008	2-R-NC-1747		CN-2491-NC079	QAL-14	VT-3	NA	1.500		
	Mech Snubber	NC	CN-ISIN3-2553-1.0				0.000		
Class A									
F01.012.009	2-R-NC-1749		CN-2491-NC079	QAL-14	VT-3	NA	1.500		
	Spring Hgr	NC	CN-ISIN3-2553-1.0				0.000		
Class A									

CATEGORY F-A, Supports

Class 1 Piping Supports

ITEM NUMBER	ID NUMBER	SYS	ISO/DWG NUMBERS	PROC	INSP REQ	MAT/SCH	DIA/THK	CAL BLOCKS	COMMENTS
F01.012.031	2-R-ND-1000		CN-2491-ND001	QAL-14	VT-3	NA	12.000		
	Spring Hgr	ND	CN-ISIN3-2561-1.1				0.000		
Class A									
F01.012.091	2-R-NV-1074		CN-2491-NV095	QAL-14	VT-3	NA	2.000		
	Mech Snubber	NV	CN-ISIN3-2554-1.5				0.000		
Class A									

Total F01.012 Items: 9

CATEGORY F-A, Supports

Class 2 Piping Supports

ITEM NUMBER	ID NUMBER	SYS	ISO/DWG NUMBERS	PROC	INSP REQ	MAT/SCH	DIA/THK	CAL BLOCKS	COMMENTS
**** Category A, One-Directional ****									
F01.020.045	2-R-ND-0019		CN-2492-ND006	QAL-14	VT-3	NA	8.000		Welded Attachment
	Rigid Support	ND	CN-ISIN3-2561-1.0				0.750		
Class B									
F01.020.069	2-R-NI-1682		CN-2491-NI066	QAL-14	VT-3	NA	6.000		
	Rigid Support	NI	CN-ISIN3-2562-1.3				0.000		
Class B									
F01.020.070	2-R-NI-1683		CN-2491-NI066	QAL-14	VT-3	NA	6.000		
	Rigid Support	NI	CN-ISIN3-2562-1.3				0.000		
Class B									
F01.020.099	2-R-NS-1140		CN-2491-NS007	QAL-14	VT-3	NA	8.000		
	Rigid Support	NS	CN-ISIN3-2563-1.0				0.000		
Class B									
F01.020.100	2-R-NS-1141		CN-2491-NS007	QAL-14	VT-3	NA	8.000		
	Rigid Support	NS	CN-ISIN3-2563-1.0				0.000		
Class B									
F01.020.154	2-A-NV-3417		CN-2492-NV038	QAL-14	VT-3	NA	4.000		
	Rigid Support	NV	CN-ISIN3-2554-1.2				0.000		
Class B									
F01.020.155	2-A-NV-3418		CN-2492-NV040	QAL-14	VT-3	NA	4.000		
	Rigid Support	NV	CN-ISIN3-2554-1.2				0.000		
Class B									
F01.020.205	2-R-SM-1543		CN-2491-SM007	QAL-14	VT-3	NA	34.000		Do Not Select As Welded Attachment Examination
	Rigid Support	SM	CN-ISIN3-2593-1.0				0.750		Per Letter From M.Shutt Dated 03/03/05.
Class B									

Total F01.020 Items: 8

**** Category B, Multi-Directional ****

CATEGORY F-A, Supports

Class 2 Piping Supports

ITEM NUMBER	ID NUMBER	SYS	ISO/DWG NUMBERS	PROC	INSP REQ	MAT/SCH	DIA/THK	CAL BLOCKS	COMMENTS
F01.021.003	2-R-CA-1687		CN-2491-CA.00-001	QAL-14	VT-3	NA	2.000		
	Rigid Restraint	CA	CN-ISIN3-2592-1.1				0.000		
Class B									
F01.021.073	2-R-NI-1616		CN-2491-NI056	QAL-14	VT-3	NA	6.000		
	Rigid Restraint	NI	CN-ISIN3-2562-1.3				0.000		
Class B									
F01.021.074	2-R-NI-1617		CN-2491-NI056	QAL-14	VT-3	NA	6.000		
	Rigid Restraint	NI	CN-ISIN3-2562-1.3				0.000		
Class B									
F01.021.075	2-R-NI-1618		CN-2491-NI056	QAL-14	VT-3	NA	6.000		
	Rigid Restraint	NI	CN-ISIN3-2562-1.3				0.000		
Class B									
F01.021.076	2-R-NI-1680		CN-2491-NI066	QAL-14	VT-3	NA	6.000		
	Rigid Restraint	NI	CN-ISIN3-2562-1.3				0.719		
Class B									
F01.021.077	2-R-NI-1681		CN-2491-NI066	QAL-14	VT-3	NA	6.000		
	Rigid Restraint	NI	CN-ISIN3-2562-1.3				0.000		
Class B									
F01.021.102	2-R-NS-1117		CN-2491-NS009	QAL-14	VT-3	NA	8.000		
	Rigid Restraint	NS	CN-ISIN3-2563-1.0				0.000		
Class B									
F01.021.103	2-R-NS-1125		CN-2491-NS009	QAL-14	VT-3	NA	8.000		
	Rigid Restraint	NS	CN-ISIN3-2563-1.0				0.000		
Class B									
F01.021.153	2-R-NV-0062		CN-2492-NV035	QAL-14	VT-3	NA	3.000		
	Rigid Restraint	NV	CN-ISIN3-2554-1.2				0.000		
Class B									

Class 2 Piping Supports

Catawba 2

Inservice Inspection Plan for Interval 3 Outage 4

ITEM NUMBER	ID NUMBER	SYS	ISO/DWG NUMBERS	PROC	INSP REQ	MAT/SCH	DIA/THK	CAL BLOCKS	COMMENTS
F01.021.154	2-R-NV-0063		CN-2492-NV035	QAL-14	VT-3	NA	3.000		
	Rigid Restraint	NV	CN-ISIN3-2554-1.2				0.000		
Class B									
F01.021.155	2-R-NV-0064		CN-2492-NV035	QAL-14	VT-3	NA	3.000		
	Rigid Restraint	NV	CN-ISIN3-2554-1.2				0.000		
Class B									

Total F01.021 Items: 11

****** Category C, Thermal Movement ******

F01.022.013	2-R-CF-1559		CN-2491-CF003	QAL-14	VT-3	NA	18.000		
	Mech Snubber	CF	CN-ISIN3-2591-1.1				1.750		
Class B									
F01.022.014	2-R-CF-1563		CN-2491-CF003	QAL-14	VT-3	NA	18.000		
	Spring Hgr	CF	CN-ISIN3-2591-1.1				0.750		
Class B									
F01.022.143	2-A-NV-0358		CN-2492-NV064	QAL-14	VT-3	NA	2.000		
	Spring Hgr	NV	CN-ISIN3-2554-1.5				0.000		
Class B									
F01.022.144	2-R-NV-0136		CN-2492-NV064	QAL-14	VT-3	NA	2.000		
	Spring Hgr	NV	CN-ISIN3-2554-1.5				0.000		
Class B									
F01.022.193	2-R-SA-1518		CN-2491-SA002	QAL-14	VT-3	NA	6.000		
	Spring Hgr	SA	CN-ISIN3-2593-1.1				0.000		
Class B									
F01.022.194	2-R-SA-1520		CN-2491-SA002	QAL-14	VT-3	NA	6.000		
	Mech Snubber	SA	CN-ISIN3-2593-1.1				0.000		
Class B									

CATEGORY F-A, Supports

Class 2 Piping Supports

Catawba 2
Inservice Inspection Plan for Interval 3 Outage 4

ITEM NUMBER	ID NUMBER	SYS	ISO/DWG NUMBERS	PROC	INSP REQ	MAT/SCH	DIA/THK	CAL BLOCKS	COMMENTS
F01.022.205	2-R-SM-1541		CN-2491-SM007	QAL-14	VT-3	NA	34.000		Do Not Select As Welded Attachment Examination
	Mech Snubber	SM	CN-ISIN3-2593-1.0				0.750		Per Letter From M.Shutt Dated 03/03/05.
Class B									
F01.022.206	2-R-SM-1542		CN-2491-SM007	QAL-14	VT-3	NA	34.000		Do Not Select As Welded Attachment Examination
	Mech Snubber	SM	CN-ISIN3-2593-1.0				0.750		Per Letter From M.Shutt Dated 03/03/05.
Class B									
F01.022.208	2-R-SM-1549		CN-2491-SM007	QAL-14	VT-3	NA	34.000		Do Not Select As Welded Attachment Examination
	Mech Snubber	SM	CN-ISIN3-2593-1.0				0.750		Per Letter From M.Shutt Dated 03/03/05.
Class B									

Total F01.022 Items: 9

CATEGORY F-A, Supports

Class 3 Piping Supports

ITEM NUMBER	ID NUMBER	SYS	ISO/DWG NUMBERS	PROC	INSP REQ	MAT/SCH	DIA/THK	CAL BLOCKS	COMMENTS
**** Category A, One-Directional ****									
F01.030.059	2-R-KC-0283		CN-2492-KC057	QAL-14	VT-3	NA	16.000		
	Rigid Support	KC	CN-ISIN3-2573-1.0				0.000		
Class C									
F01.030.060	2-R-KC-0285		CN-2492-KC057	QAL-14	VT-3	NA	16.000		
	Rigid Support	KC	CN-ISIN3-2573-1.0				0.000		
Class C									
F01.030.061	2-R-KC-0425		CN-2492-KC057	QAL-14	VT-3	NA	16.000		
	Rigid Support	KC	CN-ISIN3-2573-1.0				0.000		
Class C									
F01.030.062	2-R-KC-0291		CN-2492-KC062	QAL-14	VT-3	NA	20.000		
	Rigid Support	KC	CN-ISIN3-2573-1.0				0.000		
Class C									
F01.030.063	2-R-KC-0293		CN-2492-KC062	QAL-14	VT-3	NA	20.000		
	Rigid Support	KC	CN-ISIN3-2573-1.0				0.000		
Class C									
F01.030.064	2-R-KC-0371		CN-2492-KC062	QAL-14	VT-3	NA	20.000		
	Rigid Support	KC	CN-ISIN3-2573-1.0				0.000		
Class C									
F01.030.102	2-R-KD-0066		CN-2493-KD020	QAL-14	VT-3	NA	8.000		
	Rigid Support	KD	CN-ISIN3-2609-1.0				0.000		
Class C									
F01.030.121	2-R-LD-0027		CN-2493-LD005	QAL-14	VT-3	NA	6.000		
	Rigid Support	LD	CN-ISIN3-2609-2.2				0.000		
Class C									

CATEGORY F-A, Supports

Class 3 Piping Supports

ITEM NUMBER	ID NUMBER	SYS	ISO/DWG NUMBERS	PROC	INSP REQ	MAT/SCH	DIA/THK	CAL BLOCKS	COMMENTS
F01.030.123	2-R-LD-0001		CN-2493-LD028	QAL-14	VT-3	NA	6.000		
	Rigid Support	LD	CN-ISIN3-2609-2.0				0.000		
Class C									
F01.030.155	2-R-RN-0010		CN-2492-RN105	QAL-14	VT-3	NA	18.000		
	Rigid Support	RN	CN-ISIN3-2574-2.4				0.000		
Class C									
F01.030.156	2-R-RN-0012		CN-2492-RN105	QAL-14	VT-3	NA	18.000		Inspect with D01.020.021.
	Rigid Support	RN	CN-ISIN3-2574-2.4				0.750		
Class C									
F01.030.157	2-R-RN-0015		CN-2492-RN105	QAL-14	VT-3	NA	18.000		
	Rigid Support	RN	CN-ISIN3-2574-2.4				0.000		
Class C									
F01.030.158	2-R-RN-0018		CN-2492-RN105	QAL-14	VT-3	NA	18.000		
	Rigid Support	RN	CN-ISIN3-2574-2.4				0.000		
Class C									

Total F01.030 Items: 13

****** Category B, Multi-Directional ******

F01.031.053	2-R-KC-0387		CN-2492-KC066	QAL-14	VT-3	NA	6.000		
	Rigid Restraint	KC	CN-ISIN3-2573-1.3				0.906		
Class C									
F01.031.101	2-R-KD-0040		CN-2493-KD023	QAL-14	VT-3	NA	6.000		
	Rigid Restraint	KD	CN-ISIN3-2609-1.0				0.000		
Class C									

Total F01.031 Items: 2

****** Category C, Thermal Movement ******

CATEGORY F-A, Supports

Class 3 Piping Supports

Catawba 2
Inservice Inspection Plan for Interval 3 Outage 4

ITEM NUMBER	ID NUMBER	SYS	ISO/DWG NUMBERS	PROC	INSP REQ	MAT/SCH	DIA/THK	CAL BLOCKS	COMMENTS
F01.032.054	2-R-KC-0420		CN-2492-KC068	QAL-14	VT-3	NA	8.000		
	Mech Snubber	KC	CN-ISIN3-2573-1.2				0.000		
Class C									
F01.032.223	2-R-VN-0096		CN-2493-VN012	QAL-14	VT-3	NA	26.000		
	Mech Snubber	VN	CN-ISIN3-2609-5.0				0.000		
Class C									

Total F01.032 Items: 2

CATEGORY F-A, Supports

Supports Other Than Piping Supports

Catawba 2
Inservice Inspection Plan for Interval 3 Outage 4

ITEM NUMBER	ID NUMBER	SYS	ISO/DWG NUMBERS	PROC	INSP REQ	MAT/SCH	DIA/THK	CAL BLOCKS	COMMENTS
****** Class 1, 2, and 3 ******									
F01.040.002	2PZR-SKIRT		CN-ISIN3-2553-1.0	QAL-14	VT-3	NA	0.000		PZR Support Skirt.
	Rigid Support	NC	CNM 2201.01.110				1.500		
Class A									
F01.040.107	2SWHX-SUPPORT		CNM 1201.06-50	QAL-14	VT-3	NA	0.000		Seal Water Heat Exchanger Support.
	Rigid Support	NV	CN-ISIN3-2554-1.6				0.750		
Class B									

Total F01.040 Items: 2

Total F01 Items: 65

ITEM NUMBER	ID NUMBER	SYS	ISO/DWG NUMBERS	PROC	INSP REQ	MAT/SCH	DIA/THK	CAL BLOCKS	COMMENTS
G06.001.001	2PZR-W4ASE			QAL-15	VT-2	SS-CS	6.000		Pressurizer Safety Nozzle Safe End X-Y Quadrant.
	Circumferential	NC	CNM 2201.01-110/1				0.960		Bare Metal Visual Examination by VT-2 qualified
Class A	Term end		CNM 2201.01-110/2						inspector around 100% of penetration. (For
	Dissimilar								responsibile individual, contact J. M. Shuping, Alloy 600 Engineer Nuclear Technical Services). Reference NRC Bulletin 2004-01). Reference Item Number G08.001.003.
G06.001.002	2PZR-W4BSE		CNM 2201.01-110/1	QAL-15	VT-2	SS-CS	6.000		Pressurizer Safety Nozzle To Safe End.
	Circumferential	NC	CNM 2201.01-110/2				0.960		W-X Quadrant.
Class A	Term end				Nozzle to				Bare Metal Visual Examination by VT-2 qualified
	Dissimilar				Safe End				inspector around 100% of penetration. (For responsibile individual, contact J. M. Shuping, Alloy 600 Engineer Nuclear Technical Services). Reference NRC Bulletin 2004-01). Reference Item Number G08.001.004.
G06.001.003	2PZR-W4CSE		CNM 2201.01-110/1	QAL-15	VT-2	SS-CS	6.000		Pressurizer Relief Nozzle To Safe End.
	Circumferential	NC	CNM 2201.01-110/2				0.960		W-Z Quadrant.
Class A	Term end				Nozzle to				Bare Metal Visual Examination by VT-2 qualified
	Dissimilar				Safe End				inspector around 100% of penetration. (For responsibile individual, contact J. M. Shuping, Alloy 600 Engineer Nuclear Technical Services). Reference NRC Bulletin 2004-01) . Reference Item Number G08.001.005.
G06.001.004	2PZR-W3SE		CNM 2201.01-110/1	QAL-15	VT-2	SS-CS	6.000		Pressurizer Safety Nozzle To Safe End. Y-Z
	Circumferential	NC	CNM 2201.01-110/2				0.960		Quadrant.
Class A	Term end				Nozzle to				Bare Metal Visual Examination by VT-2 qualified
	Dissimilar				Safe End				inspector around 100% of penetration. (For responsibile individual, contact J. M. Shuping, Alloy 600 Engineer Nuclear Technical Services). Reference NRC Bulletin 2004-01) . Reference Item Number G08.001.002.
G06.001.005	2PZR-W1SE		CNM 2201.01-110/1	QAL-15	VT-2	SS-CS	14.000		Pressurizer Surge Nozzle To Safe End.
	Circumferential	NC	CNM 2201.01-110/2				1.640		Bare Metal Visual Examination by VT-2 qualified
Class A	Term end				Nozzle to				inspector around 100% of penetration. (For
	Dissimilar				Safe End				responsibile individual, contact J. M. Shuping, Alloy 600 Engineer Nuclear Technical Services). Reference NRC Bulletin 2004-01) .

ITEM NUMBER	ID NUMBER	SYS	ISO/DWG NUMBERS	PROC	INSP REQ	MAT/SCH	DIA/THK	CAL BLOCKS	COMMENTS
									Reference Item Number G08.001.001.
G06.001.006 Class A	2PZR-W2SE Circumferential Term end Dissimilar	NC	CNM 2201.01-110/1 CNM 2201.01-110/2	QAL-15	VT-2 Nozzle to Safe End	SS-CS	4.000 0.760		Pressurizer Spray Nozzle To Safe End. Bare Metal Visual Examination by VT-2 qualified inspector around 100% of penetration. (For responsibile individual, contact J. M. Shuping, Alloy 600 Engineer Nuclear Technical Services). Reference NRC Bulletin 2004-01). Reference Item Number G08.001.006.
Total G06.001 Items:	**6**								
G06.002.001 Class A	2PZR-MANWAY	NC	CNM 2201.01-110/1 CNM 2201.01-110/2	QAL-15	VT-2	NA	0.000 0.000		Pressurizer Manway Diaphram Seal Weld. Bare Metal Visual Examination by VT-2 qualified inspector. Examine the gap between the Pressurizer Manway Cover and Manway for evidence of diaphram plate seal weld leakage. (For responsibile individual, contact J. M. Shuping, Alloy 600 Engineer Nuclear Technical Services). Reference NRC Bulletin 2004-01)
Total G06.002 Items:	**1**								
Total G06 Items:	**7**								

ITEM NUMBER	ID NUMBER	SYS	ISO/DWG NUMBERS	PROC	INSP REQ	MAT/SCH	DIA/THK	CAL BLOCKS	COMMENTS
G08.001.001	2PZR-W1SE		CNM 2201.01-110/1	QAL-15	VT-2	SS-CS	14.000		Pressurizer Surge Nozzle To Safe End.
	Circumferential	NC	CNM 2201.01-110/2				1.640		Bare Metal Visual Examination by VT-2 qualified
Class A	Term end				Nozzle to				inspector per requirements of MRP-139. (For
	Dissimilar				Safe End				responsible individual, contact J. M. Shuping, Alloy 600 Engineer Nuclear Technical Services). Reference Item Number G06.001.005.
G08.001.002	2PZR-W3SE		CNM 2201.01-110/1	QAL-15	VT-2	SS-CS	6.000		Pressurizer Safety Nozzle To Safe End. Y-Z
	Circumferential	NC	CNM 2201.01-110/2				0.960		Quadrant.
Class A	Term end				Nozzle to				Bare Metal Visual Examination by VT-2 qualified
	Dissimilar				Safe End				inspector per requirements of MRP-139. (For responsible individual, contact J. M. Shuping, Alloy 600 Engineer Nuclear Technical Services). Reference Item Number G06.001.004.
G08.001.003	2PZR-W4ASE		CNM 2201.01-110/1	QAL-15	VT-2	SS-CS	6.000		Pressurizer Safety Nozzle To Safe End.
	Circumferential	NC	CNM 2201.01-110/2				0.960		X-Y Quadrant.
Class A	Term end				Nozzle to				Bare Metal Visual Examination by VT-2 qualified
	Dissimilar				Safe End				inspector per requirements of MRP-139. (For responsible individual, contact J. M. Shuping, Alloy 600 Engineer Nuclear Technical Services). Reference Item Number G06.001.001.
G08.001.004	2PZR-W4BSE		CNM 2201.01-110/1	QAL-15	VT-2	SS-CS	6.000		Pressurizer Safety Nozzle To Safe End.
	Circumferential	NC	CNM 2201.01-110/2				0.960		W-X Quadrant.
Class A	Term end				Nozzle to				Bare Metal Visual Examination by VT-2 qualified
	Dissimilar				Safe End				inspector per requirements of MRP-139. (For responsible individual, contact J. M. Shuping, Alloy 600 Engineer Nuclear Technical Services). Reference Item Number G06.001.002.
G08.001.005	2PZR-W4CSE		CNM 2201.01-110/1	QAL-15	VT-2	SS-CS	6.000		Pressurizer Relief Nozzle To Safe End.
	Circumferential	NC	CNM 2201.01-110/2				0.960		W-Z Quadrant.
Class A	Term end				Nozzle to				Bare Metal Visual Examination by VT-2 qualified
	Dissimilar				Safe End				inspector per requirements of MRP-139. (For responsible individual, contact J. M. Shuping, Alloy 600 Engineer Nuclear Technical Services). Reference Item Number G06.001.003.

ITEM NUMBER	ID NUMBER	SYS	ISO/DWG NUMBERS	PROC	INSP REQ	MAT/SCH	DIA/THK	CAL BLOCKS	COMMENTS
G08.001.006	2PZR-W2SE		CNM 2201.01-110/1	QAL-15	VT-2	SS-CS	4.000		Pressurizer Spray Nozzle To Safe End.
	Circumferential	NC	CNM 2201.01-110/2				0.760		Bare Metal Visual Examination by VT-2 qualified
Class A	Term end				Nozzle to				inspector per requirements of MRP-139. (For
	Dissimilar				Safe End				responsible individual, contact J. M. Shuping, Alloy 600 Engineer Nuclear Technical Services). Reference Item Number G06.001.006.
Total G08.001 Items:	**6**								
G08.002.001	2RPV202-121ASE		E 8871-171-009	QAL-15	VT-2	SS-CS	29.000		RV Outlet Nozzle To Safe End At 158 Degrees
	Circumferential	NC	CNM 2201.01-74/5				2.625		(Loop A). Reactor Building Coordinate is 22
Class A	Term end		CNM 2201.01-0205		Nozzle to				Degrees. To Be Done With B09.011.001.
	Dissimilar				Safe End				Bare Metal Visual Examination by VT-2 qualified inspector per requirements of MRP-139. (For responsible individual, contact J. M. Shuping, Alloy 600 Engineer Nuclear Technical Services). Note: This weld location is also required to be UT inspected per ASME Section XI, Item Number B05.010.006 Outage 7 (EOC20).
G08.002.002	2RPV-202-121BSE		E 8871-171-009	QAL-15	VT-2	SS-CS	29.000		RV Outlet Nozzle To Safe End At 22 Degrees (Loop
	Circumferential	NC	CNM 2201.01-74/5				2.625		B). Reactor Building Coordinate is 158 Degrees.
Class A	Term end		CNM 2201.01-0205		Nozzle to				To Be Done With B09.011.005.
	Dissimilar				Safe End				Bare Metal Visual Examination by VT-2 qualified inspector per requirements of MRP-139. (For responsible individual, contact J. M. Shuping, Alloy 600 Engineer Nuclear Technical Services). Note: This weld location is also required to be UT inspected per ASME Section XI, Item Number B05.010.005 Outage 7 (EOC20).
G08.002.003	2RPV-202-121CSE		E 8871-171-009	QAL-15	VT-2	SS-CS	29.000		RV Outlet Nozzle To Safe End At 338 Degrees
	Circumferential	NC	CNM 2201.01-74/5				2.625		(Loop C). Reactor Building Coordinate is 202
Class A	Term end		CNM 2201.01-0205		Nozzle to				Degrees. To Be Done With B09.011.009.
	Dissimilar				Safe End				Bare Metal Visual Examination by VT-2 qualified inspector per requirements of MRP-139. (For responsible individual, contact J. M. Shuping, Alloy 600 Engineer Nuclear Technical Services). Note: This weld location is also required to be UT inspected per ASME Section XI, Item Number B05.010.008 Outage 7 (EOC20).

CATEGORY AUG, Augmented Inspections

DUKE ENERGY CORPORATION
INSERVICE INSPECTION PLAN MANAGEMENT
Inservice Inspection Database Management System

Catawba 2

Inservice Inspection Plan for Interval 3 Outage 4

ITEM NUMBER	ID NUMBER	SYS	ISO/DWG NUMBERS	PROC	INSP REQ	MAT/SCH	DIA/THK	CAL BLOCKS	COMMENTS
G08.002.004	2RPV-202-121DSE		E 8871-171-009	QAL-15	VT-2	SS-CS	29.000		RV Outlet Nozzle To Safe End At 202 Degrees (Loop D). Reactor Building Coordinate is 338 Degrees. To Be Done With B09.011.013. Bare Metal Visual Examination by VT-2 qualified inspector per requirements of MRP-139. (For responsible individual, contact J. M. Shuping, Alloy 600 Engineer Nuclear Technical Services). Note: This weld location is also required to be UT inspected per ASME Section XI, Item Number B05.010.001 Outage 7 (EOC20).
	Circumferential	NC	CNM 2201.01-74/5				2.625		
Class A	Term end		CNM 2201.01-0205		Nozzle to Safe End				
	Dissimilar								

Total G08.002 Items:	**4**
Total G08 Items:	**10**

CATEGORY ELC, Elective Inspections

DUKE ENERGY CORPORATION
INSERVICE INSPECTION PLAN MANAGEMENT
Inservice Inspection Database Management System

Catawba 2

Inservice Inspection Plan for Interval 3 Outage 4

ITEM NUMBER	ID NUMBER	SYS	ISO/DWG NUMBERS	PROC	INSP REQ	MAT/SCH	DIA/THK	CAL BLOCKS	COMMENTS
**** ELC ****									
H02.001.001	2-R-NC-1929		CN-2NC-094	NDE-35	PT	SS	0.750		Class 2 Welded Attachment
		NC	CN-2491-NC-052				0.218		Pipe to Anchor Pad Weld
Class B					Pipe to Anchor Pad				

Total H02.001 Items: 1

Total H02 Items: 1

Duke Power Company

Quality Assurance Technical Services

Inservice Inspection Plan For:

Catawba Unit 2

Interval 3

ISI Outage 5

Refueling Outage EOC 18

ISI Inspection Listing

Revision 0

CATEGORY B-D, Full Penetration Welded Nozzels In Vessels - Inspection Program B

Pressurizer

DUKE ENERGY CORPORATION
INSERVICE INSPECTION PLAN MANAGEMENT
Inservice Inspection Database Management System
Catawba 2
Inservice Inspection Plan for Interval 3 Outage 5

ITEM NUMBER	ID NUMBER	SYS	ISO/DWG NUMBERS	PROC	INSP REQ	MAT/SCH	DIA/THK	CAL BLOCKS	COMMENTS
**** Nozzle Inside Radius Section ****									
B03.110.003	2PZR-W3		CNM 2201.01-110/1	NDE-640	UT	CS	15.000	50338	Pressurizer Safety Nozzle To Upper Head.
	Circumferential	NC	CNM 2201.01-110/2	NDE-820			3.000		Y-Z Quadrant.
Class A					Nozzle to Head				
B03.110.004	2PZR-W4A		CNM 2201.01-110/1	NDE-640	UT	CS	15.000	50338	Pressurizer Safety Nozzle To Upper Head.
	Circumferential	NC	CNM 2201.01-110/2	NDE-820			3.000		X-Y Quadrant.
Class A					Nozzle to Head				
B03.110.005	2PZR-W4B		CNM 2201.01-110/1	NDE-640	UT	CS	15.000	50338	Pressurizer Safety Nozzle To Upper Head.
	Circumferential	NC	CNM 2201.01-110/2	NDE-820			3.000		W-X Quadrant.
Class A					Nozzle to Head				

Total B03.110 Items: 3

CATEGORY B-D, Full Penetration Welded Nozzels In Vessels - Inspection Program B

Steam Generators (Primary Side)

DUKE ENERGY CORPORATION
INSERVICE INSPECTION PLAN MANAGEMENT
Inservice Inspection Database Management System
Catawba 2
Inservice Inspection Plan for Interval 3 Outage 5

ITEM NUMBER	ID NUMBER	SYS	ISO/DWG NUMBERS	PROC	INSP REQ	MAT/SCH	DIA/THK	CAL BLOCKS	COMMENTS
****** Nozzle-to-Vessel Welds ******									
B03.120.003	2PZR-W3		CNM 2201.01-110/1	NDE-680	UT	CS	15.000	50237D	Pressurizer Safety Nozzle To Upper Head. (Inside Radius Section) Y-Z Quadrant .
		NC	CNM 2201.01-110/2				3.750		
Class A					Nozzle to Head				
B03.120.004	2PZR-W4A		CNM 2201.01-110/1	NDE-680	UT	CS	15.000	50237D	Pressurizer Safety Nozzle To Upper Head. (Inside Radius Section) X-Y Quadrant.
		NC	CNM 2201.01-110/2				3.750		
Class A					Nozzle to Head				
B03.120.005	2PZR-W4B		CNM 2201.01-110/1	NDE-680	UT	CS	15.000	50237D	Pressurizer Safety Nozzle To Upper Head. (Inside Radius Section) W-X Quadrant.
		NC	CNM 2201.01-110/2				3.750		
Class A					Nozzle to Head				

Total B03.120 Items: 3

CATEGORY B-D, Full Penetration Welded Nozzels In Vessels - Inspection Program B

Heat Exchangers (Primary Side)

DUKE ENERGY CORPORATION
INSERVICE INSPECTION PLAN MANAGEMENT
Inservice Inspection Database Management System
Catawba 2
Inservice Inspection Plan for Interval 3 Outage 5

ITEM NUMBER	ID NUMBER	SYS	ISO/DWG NUMBERS	PROC	INSP REQ	MAT/SCH	DIA/THK	CAL BLOCKS	COMMENTS
****** Nozzle-to-Vessel Welds ******									
B03.140.001	2SGA-INLET		CNM 2201.01-102/2	NDE-680	UT	CS	39.000	50235	Steam Generator 2A Primary Inlet Nozzle To Lower Head. (Inside Radius Section) W-X Quadrant.
Class A		NC	CNM 2201.01-113/1				5.160		
B03.140.002	2SGA-OUTLET		CNM 2201.01-102/2	NDE-680	UT	CS	39.000	50235	Steam Generator 2A Primary Outlet Nozzle To Lower Head. (Inside Radius Section) W-Z Quadrant.
Class A		NC	CNM 2201.01-113/1				5.160		
B03.140.007	2SGD-INLET		CNM 2201.01-102/2	NDE-680	UT	CS	39.000	50235	Steam Generator 2D Primary Inlet Nozzle To Lower Head. (Inside Radius Section) X-Y Quadrant.
Class A		NC	CNM 2201.01-114/1				5.160		
B03.140.008	2SGD-OUTLET		CNM 2201.01-102/2	NDE-680	UT	CS	39.000	50235	Steam Generator 2D Primary Outlet Nozzle To Lower Head. (Inside Radius Section) Y-Z Quadrant.
Class A		NC	CNM 2201.01-114/1				5.160		

Total B03.140 Items: 4

Total B03 Items: 10

DUKE ENERGY CORPORATION
INSERVICE INSPECTION PLAN MANAGEMENT
Inservice Inspection Database Management System

CATEGORY B-F, Pressure Retaining Dissimilar Metal Welds In Vessel Nozzles

Pressurizer

Catawba 2
Inservice Inspection Plan for Interval 3 Outage 5

ITEM NUMBER	ID NUMBER	SYS	ISO/DWG NUMBERS	PROC	INSP REQ	MAT/SCH	DIA/THK	CAL BLOCKS	COMMENTS
****** Less Than NPS 4; Nozzle-to-Safe End Butt Welds ******									
B05.040.001	2PZR-W1SE		CNM 2201.01-110/1	TBD	UT	SS-CS	14.000	TBD	Pressurizer Surge Nozzle To Safe End.
	Circumferential	NC	CNM 2201.01-110/2				1.640		Reference Item Number G07.001.001
Class A	Term end				Nozzle to				
	Dissimilar				Safe End				
B05.040.001A	2PZR-W1SE		CNM 2201.01-110/1	NDE-35	PT	SS-CS	14.000		Pressurizer Surge Nozzle To Safe End.
	Circumferential	NC	CNM 2201.01-110/2				1.640		
Class A	Term end				Nozzle to				
	Dissimilar				Safe End				
B05.040.003	2PZR-W3SE		CNM 2201.01-110/1	TBD	UT	SS-CS	6.000	TBD	Pressurizer Safety Nozzle To Safe End. Y-Z
	Circumferential	NC	CNM 2201.01-110/2				0.960		Quadrant.
Class A	Term end				Nozzle to				Reference Item Number G07.001.002.
	Dissimilar				Safe End				
B05.040.003A	2PZR-W3SE		CNM 2201.01-110/1	NDE-35	PT	SS-CS	6.000		Pressurizer Safety Nozzle To Safe End. Y-Z
	Circumferential	NC	CNM 2201.01-110/2				0.960		Quadrant.
Class A	Term end				Nozzle to				
	Dissimilar				Safe End				
B05.040.004	2PZR-W4ASE		CNM 2201.01-110/1	TBD	UT	SS-CS	6.000	TBD	Pressurizer Safety Nozzle To Safe End.
	Circumferential	NC	CNM 2201.01-110/2				0.960		X-Y Quadrant.
Class A	Term end				Nozzle to				
	Dissimilar				Safe End				
B05.040.004A	2PZR-W4ASE		CNM 2201.01-110/1	NDE-35	PT	SS-CS	6.000		Pressurizer Safety Nozzle To Safe End.
	Circumferential	NC	CNM 2201.01-110/2				0.960		X-Y Quadrant.
Class A	Term end				Nozzle to				
	Dissimilar				Safe End				
B05.040.005	2PZR-W4BSE		CNM 2201.01-110/1	TBD	UT	SS-CS	6.000	TBD	Pressurizer Safety Nozzle To Safe End.
	Circumferential	NC	CNM 2201.01-110/2				0.960		W-X Quadrant.
Class A	Term end				Nozzle to				Reference Item Number G07.001.004.
	Dissimilar				Safe End				
B05.040.005A	2PZR-W4BSE		CNM 2201.01-110/1	NDE-35	PT	SS-CS	6.000		Pressurizer Safety Nozzle To Safe End.
	Circumferential	NC	CNM 2201.01-110/2				0.960		W-X Quadrant.
Class A	Term end				Nozzle to				
	Dissimilar				Safe End				

Total B05.040 Items: 8

DUKE ENERGY CORPORATION
INSERVICE INSPECTION PLAN MANAGEMENT
Inservice Inspection Database Management System

CATEGORY B-F, Pressure Retaining Dissimilar Metal Welds In Vessel Nozzles

Steam Generator

Catawba 2
Inservice Inspection Plan for Interval 3 Outage 5

ITEM NUMBER	ID NUMBER	SYS	ISO/DWG NUMBERS	PROC	INSP REQ	MAT/SCH	DIA/THK	CAL BLOCKS	COMMENTS
****** Less Than NPS 4; Nozzle-to-Safe End Butt Welds ******									
B05.070.001	2SGA-INLET-SE		CNM 2201.01-113/1	NDE-12	RT	SS-CS	31.000		Steam Generator 2A Inlet Nozzle To Safe End.
	Circumferential	NC	CN-2NC-009				2.500		To Be Done With B09.011.002.
Class A			CNM 2201.01-0217		Nozzle to				
	Dissimilar				Safe End				
B05.070.001A	2SGA-INLET-SE		CNM 2201.01-113/1	NDE-35	PT	SS-CS	31.000		Steam Generator 2A Inlet Nozzle To Safe End.
	Circumferential	NC	CN-2NC-009				2.500		To Be Done With B09.011.002A.
Class A			CNM 2201.01-0217		Nozzle to				
	Dissimilar				Safe End				
B05.070.002	2SGA-OUTLET-SE		CNM 2201.01-113/1	NDE-12	RT	SS-CS	31.000		Steam Generator 2A Outlet Nozzle To Safe End.
	Circumferential	NC	CN-2NC-009				2.500		To Be Done With B09.011.003.
Class A			CNM 2201.01-0217		Nozzle to				
	Dissimilar				Safe End				
B05.070.002A	2SGA-OUTLET-SE		CNM 2201.01-113/1	NDE-35	PT	SS-CS	31.000		Steam Generator 2A Outlet Nozzle To Safe End.
	Circumferential	NC	CN-2NC-009				2.500		To Be Done With B09.011.003A.
Class A			CNM 2201.01-0217		Nozzle to				
	Dissimilar				Safe End				
B05.070.007	2SGD-INLET-SE		CNM 2201.01-114/1	NDE-12	RT	SS-CS	31.000		Steam Generator 2D Inlet Nozzle To Safe End.
	Circumferential	NC	CN-2NC-015				2.500		To Be Done With B09.011.014.
Class A			CNM 2201.01-0217		Nozzle to				
	Dissimilar				Safe End				
B05.070.007A	2SGD-INLET-SE		CNM 2201.01-114/1	NDE-35	PT	SS-CS	31.000		Steam Generator 2D Inlet Nozzle To Safe End.
	Circumferential	NC	CN-2NC-015				2.500		To Be Done With B09.011.014A.
Class A			CNM 2201.01-0217		Nozzle to				
	Dissimilar				Safe End				
B05.070.008	2SGD-OUTLET-SE		CNM 2201.01-114/1	NDE-12	RT	SS-CS	31.000		Steam Generator 2D Outlet Nozzle To Safe End.
	Circumferential	NC	CN-2NC-015				2.500		To Be Done With B09.011.015.
Class A			CNM 2201.01-0217		Nozzle to				
	Dissimilar				Safe End				
B05.070.008A	2SGD-OUTLET-SE		CNM 2201.01-114/1	NDE-35	PT	SS-CS	31.000		Steam Generator 2D Outlet Nozzle To Safe End.
	Circumferential	NC	CN-2NC-015				2.500		To Be Done With B09.011.015A.
Class A			CNM 2201.01-0217		Nozzle to				
	Dissimilar				Safe End				

Total B05.070 Items: 8

Total B05 Items: 16

CATEGORY B-G-1, Pressure Retaining Bolting, Greater Than 2 in. In Diameter

Pumps

ITEM NUMBER	ID NUMBER	SYS	ISO/DWG NUMBERS	PROC	INSP REQ	MAT/SCH	DIA/THK	CAL BLOCKS	COMMENTS
**** Nuts, Bushings, and Washers ****									
B06.190.001	2RCP-2A-FLANGE		CN-2NC-009	QAL-13	VT-1	SS	0.000		Reactor Colant Pump 2A Main Flange Surface.
		NC	CNM 2201.01-115				0.000		Examine When Connection Is Disassembled.
Class A									
B06.190.002	2RCP-2B-FLANGE		CN-2NC-011	QAL-13	VT-1	SS	0.000		Reactor Colant Pump 2B Main Flange Surface.
		NC	CNM 2201.01-115				0.000		Examine When Connection Is Disassembled.
Class A									
B06.190.003	2RCP-2C-FLANGE		CN-2NC-013	QAL-13	VT-1	SS	0.000		Reactor Colant Pump 2C Main Flange Surface.
		NC	CNM 2201.01-115				0.000		Examine When Connection Is Disassembled.
Class A									
B06.190.004	2RCP-2D-FLANGE		CN-2NC-015	QAL-13	VT-1	SS	0.000		Reactor Colant Pump 2D Main Flange Surface.
		NC	CNM 2201.01-115				0.000		Examine When Connection Is Disassembled.
Class A									

Total B06.190 Items: 4

Total B06 Items: 4

DUKE ENERGY CORPORATION
INSERVICE INSPECTION PLAN MANAGEMENT
Inservice Inspection Database Management System

CATEGORY B-G-2, Pressure Retaining Bolting, 2 in. And Less In Diameter

Heat Exchangers

Catawba 2

Inservice Inspection Plan for Interval 3 Outage 5

ITEM NUMBER	ID NUMBER	SYS	ISO/DWG NUMBERS	PROC	INSP REQ	MAT/SCH	DIA/THK	CAL BLOCKS	COMMENTS
****** Bolts, Studs, and Nuts ******									
B07.030.005	2SGC-MW-X-Y	NC	CNM 2201.01-59/1 CNM 2201.01-105/1	QAL-13	VT-1	CS	1.880 0.000		Steam Generator 2C Manway Bolting (16 Studs and Nuts). Primary Manway in X-Y Quadrant (Inlet Side). Examine All Bolting Material.
Class A									
B07.030.006	2SGC-MW-Y-Z	NC	CNM 2201.01-59/1 CNM 2201.01-105/1	QAL-13	VT-1	CS	1.880 0.000		Steam Generator 2C Manway Bolting (16 Studs and Nuts). Primary Manway in Y-Z Quadrant (Outlet Side). Examine All Bolting Material.
Class A									

Total B07.030 Items: 2

DUKE ENERGY CORPORATION
INSERVICE INSPECTION PLAN MANAGEMENT
Inservice Inspection Database Management System

Catawba 2

Inservice Inspection Plan for Interval 3 Outage 5

CATEGORY B-G-2, Pressure Retaining Bolting, 2 in. And Less In Diameter

NPS 4 or Larger

ITEM NUMBER	ID NUMBER	SYS	ISO/DWG NUMBERS	PROC	INSP REQ	MAT/SCH	DIA/THK	CAL BLOCKS	COMMENTS
B07.080.001	2CRD-HOUSING		CNM 2201.01-74/7 CNM 2201.01-89	QAL-13	VT-1	SS	6.000 0.000		Threaded Housing With Seal Weld. Examine Only CRD Bolting That Is Resued When Housing Is Disassembled.
Class A									

Total B07.080 Items: 1

Total B07 Items: 3

CATEGORY B-J, Pressure Retaining Welds In Piping

Less Than NPS 4

DUKE ENERGY CORPORATION
INSERVICE INSPECTION PLAN MANAGEMENT
Inservice Inspection Database Management System
Catawba 2
Inservice Inspection Plan for Interval 3 Outage 5

ITEM NUMBER	ID NUMBER	SYS	ISO/DWG NUMBERS	PROC	INSP REQ	MAT/SCH	DIA/THK	CAL BLOCKS	COMMENTS
B09.011.002	2NC9-2		CN-2NC-009	NDE-12	RT	SS-CS	31.000		Reactor Coolant Loop 2A Hot Leg. Steam Generator 2A Inlet Nozzle Safe End To Pipe. To be done with B05.070.001.
	Circumferential	NC	CN-ISIN3-2553-1.0				2.500		
Class A	Term end		CNM 2201.01-0217		Safe End to				
	Dissimilar				Pipe				
B09.011.002A	2NC9-2		CN-2NC-009	NDE-35	PT	SS-CS	31.000		Reactor Coolant Loop 2A Hot Leg. Steam Generator 2A Inlet Nozzle Safe End To Pipe. To be done with B05.070.001A.
	Circumferential	NC	CN-ISIN3-2553-1.0				2.500		
Class A	Term end		CNM 2201.01-0217		Safe End to				
	Dissimilar				Pipe				
B09.011.003	2NC9-3		CN-2NC-009	NDE-12	RT	SS-CS	31.000		Reactor Coolant Loop 2A Crossover Leg. Steam Generator 2A Outlet Nozzle Safe End To Pipe. To be done with B05.070.002.
	Circumferential	NC	CN-ISIN3-2553-1.0				2.500		
Class A	Term end		CNM 2201.01-0217		Safe End to				
	Dissimilar				Pipe				
B09.011.003A	2NC9-3		CN-2NC-009	NDE-35	PT	SS-CS	31.000		Reactor Coolant Loop 2A Crossover Leg. Steam Generator 2A Outlet Nozzle Safe End To Pipe. To be done with B05.070.002A.
	Circumferential	NC	CN-ISIN3-2553-1.0				2.500		
Class A	Term end		CNM 2201.01-0217		Safe End to				
	Dissimilar				Pipe				
B09.011.014	2NC15-2		CN-2NC-015	NDE-12	RT	SS-CS	31.000		Reactor Coolant Loop 2D Hot Leg. Steam Generator 2D Inlet Nozzle Safe End To Pipe. To be done with B05.070.007.
	Circumferential	NC	CN-ISIN3-2553-1.0				2.500		
Class A	Term end		CNM 2201.01-0217		Safe End to				
	Dissimilar				Pipe				
B09.011.014A	2NC15-2		CN-2NC-015	NDE-35	PT	SS-CS	31.000		Reactor Coolant Loop 2D Hot Leg. Steam Generator 2D Inlet Nozzle Safe End To Pipe. To be done with B05.070.007A.
	Circumferential	NC	CN-ISIN3-2553-1.0				2.500		
Class A	Term end		CNM 2201.01-0217		Safe End to				
	Dissimilar				Pipe				

CATEGORY B-J, Pressure Retaining Welds In Piping

Less Than NPS 4

ITEM NUMBER	ID NUMBER	SYS	ISO/DWG NUMBERS	PROC	INSP REQ	MAT/SCH	DIA/THK	CAL BLOCKS	COMMENTS
B09.011.015	2NC15-3		CN-2NC-015	NDE-12	RT	SS-CS	31.000		Reactor Coolant Loop 2D Crossover Leg. Steam Generator 2D Outlet Nozzle Safe End To Pipe. To be done with B05.070.008.
	Circumferential	NC	CN-ISIN3-2553-1.0				2.500		
Class A	Term end		CNM 2201.01-0217		Safe End to Pipe				
	Dissimilar								
B09.011.015A	2NC15-3		CN-2NC-015	NDE-35	PT	SS-CS	31.000		Reactor Coolant Loop 2D Crossover Leg. Steam Generator 2D Outlet Nozzle Safe End To Pipe. To be done with B05.070.008A.
	Circumferential	NC	CN-ISIN3-2553-1.0				2.500		
Class A	Term end		CNM 2201.01-0217		Safe End to Pipe				
	Dissimilar								
B09.011.064	2NC48-2		CN-2NC-48	NDE-600	UT	SS	10.000	Component	Depending on the examiners qualifications, Procedure PDI-UT-2 may be used in lieu of NDE-600. If PDI-UT-2 is used, Calibration Block PDI-UT-2-C may be used.
	Circumferential	NC	CN-ISIN3-2553-1.0			140	1.000		
Class A					Pipe to Elbow				

CATEGORY B-J, Pressure Retaining Welds In Piping

Less Than NPS 4

ITEM NUMBER	ID NUMBER	SYS	ISO/DWG NUMBERS	PROC	INSP REQ	MAT/SCH	DIA/THK	CAL BLOCKS	COMMENTS
B09.011.064A	2NC48-2		CN-2NC-48	NDE-35	PT	SS	10.000		
	Circumferential	NC	CN-ISIN3-2553-1.0			140	1.000		
Class A					Pipe to Elbow				
B09.011.065	2NC48-3		CN-2NC-48	NDE-600	UT	SS	10.000	Component	Depending on the examiners qualifications, Procedure PDI-UT-2 may be used in lieu of NDE-600. If PDI-UT-2 is used, Calibration Block PDI-UT-2-C may be used.
	Circumferential	NC	CN-ISIN3-2553-1.0			140	1.000		
Class A					Elbow to Pipe				
B09.011.065A	2NC48-3		CN-2NC-48	NDE-35	PT	SS	10.000		
	Circumferential	NC	CN-ISIN3-2553-1.0			140	1.000		
Class A					Elbow to Pipe				
B09.011.066	2NC48-4		CN-2NC-48	NDE-600	UT	SS	10.000	Component	Depending on the examiners qualifications, Procedure PDI-UT-2 may be used in lieu of NDE-600. If PDI-UT-2 is used, Calibration Block PDI-UT-2-C may be used.
	Circumferential	NC	CN-ISIN3-2553-1.0			140	1.000		
Class A					Pipe to Elbow				
B09.011.066A	2NC48-4		CN-2NC-48	NDE-35	PT	SS	10.000		
	Circumferential	NC	CN-ISIN3-2553-1.0			140	1.000		
Class A					Pipe to Elbow				
B09.011.151	2NI183-13		CN-2NI-183	NDE-600	UT	SS	10.000	Component	Depending on the examiners qualifications, Procedure PDI-UT-2 may be used in lieu of NDE-600. If PDI-UT-2 is used, Calibration Block PDI-UT-2-C may be used.
	Circumferential	NI	CN-ISIN3-2562-1.1			140	1.000		
Class A					Elbow to Pipe				
B09.011.151A	2NI183-13		CN-2NI-183	NDE-35	PT	SS	10.000		
	Circumferential	NI	CN-ISIN3-2562-1.1			140	1.000		
Class A					Pipe				
B09.011.152	2NI183-15		CN-2NI-183	NDE-600	UT	SS	10.000	Component	Depending on the examiners qualifications, Procedure PDI-UT-2 may be used in lieu of NDE-600. If PDI-UT-2 is used, Calibration Block PDI-UT-2-C may be used.
	Circumferential	NI	CN-ISIN3-2562-1.1			140	1.000		
Class A					Elbow to Pipe				
B09.011.152A	2NI183-15		CN-2NI-183	NDE-35	PT	SS	10.000		
	Circumferential	NI	CN-ISIN3-2562-1.1			140	1.000		
Class A					Elbow to Pipe				

CATEGORY B-J, Pressure Retaining Welds In Piping

Less Than NPS 4

ITEM NUMBER	ID NUMBER	SYS	ISO/DWG NUMBERS	PROC	INSP REQ	MAT/SCH	DIA/THK	CAL BLOCKS	COMMENTS
B09.011.153	2NI183-2		CN-2NI-183	NDE-600	UT	SS	6.000	Component	Depending on the examiners qualifications, Procedure PDI-UT-2 may be used in lieu of NDE-600. If PDI-UT-2 is used, Calibration Block PDI-UT-2-C may be used.
	Circumferential	NI	CN-ISIN3-2562-1.1			160	0.719		
Class A					Pipe to Elbow				
B09.011.153A	2NI183-2		CN-2NI-183	NDE-35	PT	SS	6.000		
	Circumferential	NI	CN-ISIN3-2562-1.1			160	0.719		
Class A					Pipe to Elbow				
B09.011.154	2NI183-4		CN-2NI-183	NDE-600	UT	SS	6.000	Component	Depending on the examiners qualifications, Procedure PDI-UT-2 may be used in lieu of NDE-600. If PDI-UT-2 is used, Calibration Block PDI-UT-2-C may be used.
	Circumferential	NI	CN-ISIN3-2562-1.1			160	0.719		
Class A					Pipe to Elbow				
B09.011.154A	2NI183-4		CN-2NI-183	NDE-35	PT	SS	6.000		
	Circumferential	NI	CN-ISIN3-2562-1.1			160	0.719		
Class A					Pipe to Elbow				
B09.011.155	2NI183-9		CN-2NI-183	NDE-600	UT	SS	6.000	Component	Depending on the examiners qualifications, Procedure PDI-UT-2 may be used in lieu of NDE-600. If PDI-UT-2 is used, Calibration Block PDI-UT-2-C may be used.
	Circumferential	NI	CN-ISIN3-2562-1.1			160	0.719		
Class A					Elbow to Pipe				
B09.011.155A	2NI183-9		CN-2NI-183	NDE-35	PT	SS	6.000		
	Circumferential	NI	CN-ISIN3-2562-1.1			160	0.719		
Class A					Elbow to Pipe				
B09.011.156	2NI184-2		CN-2NI-184	NDE-600	UT	SS	10.000	Component	Depending on the examiners qualifications, Procedure PDI-UT-2 may be used in lieu of NDE-600. If PDI-UT-2 is used, Calibration Block PDI-UT-2-C may be used.
	Circumferential	NI	CN-ISIN3-2562-1.1			140	1.000		
Class A					Pipe to Elbow				
B09.011.156A	2NI184-2		CN-2NI-184	NDE-35	PT	SS	10.000		
	Circumferential	NI	CN-ISIN3-2562-1.1			140	1.000		
Class A					Pipe to Elbow				
B09.011.157	2NI184-4		CN-2NI-184	NDE-600	UT	SS	10.000	Component	Depending on the examiners qualifications, Procedure PDI-UT-2 may be used in lieu of NDE-600. If PDI-UT-2 is used, Calibration Block PDI-UT-2-C may be used.
	Circumferential	NI	CN-ISIN3-2562-1.1			140	1.000		
Class A					Elbow to Pipe				

CATEGORY B-J, Pressure Retaining Welds In Piping

Less Than NPS 4

ITEM NUMBER	ID NUMBER	SYS	ISO/DWG NUMBERS	PROC	INSP REQ	MAT/SCH	DIA/THK	CAL BLOCKS	COMMENTS
B09.011.157A	2NI184-4		CN-2NI-184	NDE-35	PT	SS	10.000		
	Circumferential	NI	CN-ISIN3-2562-1.1			140	1.000		
Class A					Elbow to Pipe				
B09.011.190	2NI92-2		CN-2NI-92	NDE-600	UT	SS	8.000	Component	Depending on the examiners qualifications, Procedure PDI-UT-2 may be used in lieu of NDE-600. If PDI-UT-2 is used, Calibration Block PDI-UT-2-C may be used.
	Circumferential	NI	CN-ISIN3-2562-1.2			160	0.906		
Class A					Elbow to Pipe				
B09.011.190A	2NI92-2		CN-2NI-92	NDE-35	PT	SS	8.000		
	Circumferential	NI	CN-ISIN3-2562-1.2			160	0.906		
Class A					Elbow to Pipe				
B09.011.191	2NI92-3		CN-2NI-92	NDE-600	UT	SS	8.000	Component	Depending on the examiners qualifications, Procedure PDI-UT-2 may be used in lieu of NDE-600. If PDI-UT-2 is used, Calibration Block PDI-UT-2-C may be used.
	Circumferential	NI	CN-ISIN3-2562-1.2			160	0.906		
Class A					Pipe to Elbow				
B09.011.191A	2NI92-3		CN-2NI-92	NDE-35	PT	SS	8.000		
	Circumferential	NI	CN-ISIN3-2562-1.2			160	0.906		
Class A					Pipe to Elbow				
B09.011.192	2NI92-4		CN-2NI-92	NDE-600	UT	SS	8.000	Component	Depending on the examiners qualifications, Procedure PDI-UT-2 may be used in lieu of NDE-600. If PDI-UT-2 is used, Calibration Block PDI-UT-2-C may be used.
	Circumferential	NI	CN-ISIN3-2562-1.2			160	0.906		
Class A					Elbow to Pipe				
B09.011.192A	2NI92-4		CN-2NI-92	NDE-35	PT	SS	8.000		
	Circumferential	NI	CN-ISIN3-2562-1.2			160	0.906		
Class A					Elbow to Pipe				

Total B09.011 Items: 34

CATEGORY B-J, Pressure Retaining Welds In Piping

Branch Pipe Connection Welds

DUKE ENERGY CORPORATION
INSERVICE INSPECTION PLAN MANAGEMENT
Inservice Inspection Database Management System
Catawba 2
Inservice Inspection Plan for Interval 3 Outage 5

ITEM NUMBER	ID NUMBER	SYS	ISO/DWG NUMBERS	PROC	INSP REQ	MAT/SCH	DIA/THK	CAL BLOCKS	COMMENTS
**** Less Than NPS 4 ****									
B09.031.001	2NC11-WN7		CN-2NC-11	NDE-830	UT	SS	14.000	50386	Reactor Coolant Loop 2B Hot Leg.
	Branch	NC	CN-ISIN3-2553-1.0			160	2.300		
Class A			CNM 2201.01-104/4		Branch to Pipe				
B09.031.001A	2NC11-WN7		CN-2NC-11	NDE-35	PT	SS	14.000		Reactor Coolant Loop 2B Hot Leg.
	Branch	NC	CN-ISIN3-2553-1.0			160	2.300		
Class A			CNM 2201.01-104/4		Branch to Pipe				
B09.031.002	2NC11-WN8		CN-2NC-11	NDE-830	UT	SS	12.000	50386	Reactor Coolant Loop 2B Hot Leg.
	Branch	NC	CN-ISIN3-2553-1.0			140	2.300		
Class A			CNM 2201.01-104/4		Branch to Pipe				
B09.031.002A	2NC11-WN8		CN-2NC-11	NDE-35	PT	SS	12.000		Reactor Coolant Loop 2B Hot Leg.
	Branch	NC	CN-ISIN3-2553-1.0			140	2.300		
Class A			CNM 2201.01-104/4		Branch to Pipe				

Total B09.031 Items: 4

CATEGORY B-J, Pressure Retaining Welds In Piping

Pressure Vessels

ITEM NUMBER	ID NUMBER	SYS	ISO/DWG NUMBERS	PROC	INSP REQ	MAT/SCH	DIA/THK	CAL BLOCKS	COMMENTS
****** Welded Attachments ******									
B09.040.074	2NI400-2		CN-2NI-400	NDE-35	PT	SS	2.000		
	Socket	NI	CN-ISIN3-2562-1.3			160	0.344		
Class A					Pipe to Elbow				
B09.040.075	2NI400-4		CN-2NI-400	NDE-35	PT	SS	2.000		
	Socket	NI	CN-ISIN3-2562-1.3			160	0.344		
Class A					Pipe to Valve 2NI171				

Total B09.040 Items: 2

Total B09 Items: 40

CATEGORY B-L-2, Pump Casings

Valves

ITEM NUMBER	ID NUMBER	SYS	ISO/DWG NUMBERS	PROC	INSP REQ	MAT/SCH	DIA/THK	CAL BLOCKS	COMMENTS
****** Valves, Less Than NPS 4; Valve Body Welds ******									
B12.020.001	2RCP-2A		CN-2NC-9	QAL-14	VT-3	SS	77.000		Reactor Coolant Pump 2A Casing Internal Surfaces. Only One Pump Required To Be Examined Per Interval. Inspect Only If Pump Is Disassembled For Maintenance, Repair, Or Volumetric Examination.
Class A		NC	CNM-1201.01-115				4.500		
B12.020.002	2RCP-2B		CN-2NC-11	QAL-14	VT-3	SS	77.000		Reactor Coolant Pump 2B Casing Internal Surfaces. Only One Pump Required To Be Examined Per Interval. Inspect Only If Pump Is Disassembled For Maintenance, Repair, Or Volumetric Examination.
Class A		NC	CNM-1201.01-115				4.500		
B12.020.003	2RCP-2C		CN-2NC-13	QAL-14	VT-3	SS	77.000		Reactor Coolant Pump 2C Casing Internal Surfaces. Only One Pump Required To Be Examined Per Interval. Inspect Only If Pump Is Disassembled For Maintenance, Repair, Or Volumetric Examination.
Class A		NC	CNM-1201.01-115				4.500		
B12.020.004	2RCP-2D		CN-2NC-15	QAL-14	VT-3	SS	77.000		Reactor Coolant Pump 2D Casing Internal Surfaces. Only One Pump Required To Be Examined Per Interval. Inspect Only If Pump Is Disassembled For Maintenance, Repair, Or Volumetric Examination.
Class A		NC	CNM-1201.01-115				4.500		

Total B12.020 Items: 4

CATEGORY B-M-2, Valve Body

Reactor Vessel

ITEM NUMBER	ID NUMBER	SYS	ISO/DWG NUMBERS	PROC	INSP REQ	MAT/SCH	DIA/THK	CAL BLOCKS	COMMENTS
**** Vessel Interior ****									
B12.050.001A Class A	2NC-1	NC	CN-2NC-112 CNM-1205.09-01	QAL-14	VT-3	SS 160	6.000 0.719		6" Relief Valve. Inspect One Of The Following Valves: 2NC-1, 2NC-2, Or 2NC-3. Inspect Only If Disassembled For Maintenance. Repair. Or Volumetric Examination.
B12.050.001B Class A	2NC-2	NC	CN-2NC-119 CNM-1205.09-01	QAL-14	VT-3	SS 160	6.000 0.719		6" Relief Valve. Inspect One Of The Following Valves: 2NC-1, 2NC-2, Or 2NC-3. Inspect Only If Disassembled For Maintenance, Repair, Or Volumetric Examination.
B12.050.001C Class A	2NC-3	NC	CN-2NC-163 CNM-1205.09-01	QAL-14	VT-3	SS 160	6.000 0.719		6" Relief Valve. Inspect One Of The Following Valves: 2NC-1, 2NC-2, Or 2NC-3. Inspect Only If Disassembled For Maintenance, Repair, Or Volumetric Examination.
B12.050.002A Class A	2NC-27	NC	CN-2NC-24 CNM-1205.06-41	QAL-14	VT-3	SS 160	6.000 0.719		6" Fisher Control Valve. Inspect One Of The Following Valves: 2NC-27, Or 2NC-29. Inspect Only If Disassembled For Maintenance, Repair, Or Volumetric Examination.
B12.050.002B Class A	2NC-29	NC	CN-2NC-33 CNM-1205.06-41	QAL-14	VT-3	SS 160	6.000 0.719		6" Fisher Control Valve. Inspect One Of The Following Valves: 2NC-27, Or 2NC-29. Inspect Only If Disassembled For Maintenance, Repair, Or Volumetric Examination.
B12.050.003A Class A	2ND-36B	ND	CN-2ND-66 CNM-1205.00-262	QAL-14	VT-3	SS 140	12.000 2.043		12" Borg Warner Gate Valve. Inspect One Of The Following Valves: 2ND-1B, 2ND-2A, 2ND-36B, Or 2ND-37A. Inspect Only If Disassembled For Maintenance, Repair, Or Volumetric Examination.
B12.050.003B Class A	2ND-37A	ND	CN-2ND-66 CNM-1205.00-262	QAL-14	VT-3	SS 140	12.000 2.043		12" Borg Warner Gate Valve. Inspect One Of The Following Valves: 2ND-1B, 2ND-2A, 2ND-36B, Or 2ND-37A. Inspect Only If Disassembled For Maintenance, Repair, Or Volumetric Examination.
B12.050.003C Class A	2ND-1B	ND	CN-2ND-67 CNM-1205.00-262	QAL-14	VT-3	SS 140	12.000 2.043		12" Borg Warner Gate Valve. Inspect One Of The Following Valves: 2ND-1B, 2ND-2A, 2ND-36B, Or 2ND-37A. Inspect Only If Disassembled For Maintenance, Repair, Or Volumetric Examination.

CATEGORY B-M-2, Valve Body

Reactor Vessel

ITEM NUMBER	ID NUMBER	SYS	ISO/DWG NUMBERS	PROC	INSP REQ	MAT/SCH	DIA/THK	CAL BLOCKS	COMMENTS
B12.050.003D Class A	2ND-2A	ND	CN-2ND-67 CNM-1205.00-262	QAL-14	VT-3	SS 140	12.000 2.043		12" Borg Warner Gate Valve. Inspect One Of The Following Valves: 2ND-1B, 2ND-2A, 2ND-36B, Or 2ND-37A. Inspect Only If Disassembled For Maintenance, Repair, Or Volumetric Examination.
B12.050.004A Class A	2NI-126	NI	CN-2NI-379 CNM-1205.00-63	QAL-14	VT-3	SS 160	6.000 0.719		6" Westinghouse Check Valve. Inspect One Of The Following Valves: 2NI-126, 2NI-134, 2NI-157, 2NI-160, 2NI-175, 2NI-176, 2NI-180, Or 2NI-181. Inspect Only If Disassembled For Maintenance, Repair, Or Volumetric Examination.
B12.050.004B Class A	2NI-134	NI	CN-2NI-91 CNM-1205.00-63	QAL-14	VT-3	SS 160	6.000 0.719		6" Westinghouse Check Valve. Inspect One Of The Following Valves: 2NI-126, 2NI-134, 2NI-157, 2NI-160, 2NI-175, 2NI-176, 2NI-180, Or 2NI-181. Inspect Only If Disassembled For Maintenance, Repair, Or Volumetric Examination.
B12.050.004C Class A	2NI-157	NI	CN-2NI-398 CNM-1205.00-63	QAL-14	VT-3	SS 160	6.000 0.719		6" Westinghouse Check Valve. Inspect One Of The Following Valves: 2NI-126, 2NI-134, 2NI-157, 2NI-160, 2NI-175, 2NI-176, 2NI-180, Or 2NI-181. Inspect Only If Disassembled For Maintenance, Repair, Or Volumetric Examination.
B12.050.004D Class A	2NI-160	NI	CN-2NI-396 CNM-1205.00-63	QAL-14	VT-3	SS 160	6.000 0.719		6" Westinghouse Check Valve. Inspect One Of The Following Valves: 2NI-126, 2NI-134, 2NI-157, 2NI-160, 2NI-175, 2NI-176, 2NI-180, Or 2NI-181. Inspect Only If Disassembled For Maintenance, Repair, Or Volumetric Examination.
B12.050.004E Class A	2NI-175	NI	CN-2NI-70 CNM-1205.00-63	QAL-14	VT-3	SS 160	6.000 0.719		6" Westinghouse Check Valve. Inspect One Of The Following Valves: 2NI-126, 2NI-134, 2NI-157, 2NI-160, 2NI-175, 2NI-176, 2NI-180, Or 2NI-181. Inspect Only If Disassembled For Maintenance, Repair, Or Volumetric Examination.
B12.050.004F Class A	2NI-176	NI	CN-2NI-77 CNM-1205.00-63	QAL-14	VT-3	SS 160	6.000 0.719		6" Westinghouse Check Valve. Inspect One Of The Following Valves: 2NI-126, 2NI-134, 2NI-157, 2NI-160, 2NI-175, 2NI-176, 2NI-180, Or 2NI-181. Inspect Only If Disassembled For Maintenance, Repair, Or Volumetric Examination.

CATEGORY B-M-2, Valve Body

Reactor Vessel

ITEM NUMBER	ID NUMBER	SYS	ISO/DWG NUMBERS	PROC	INSP REQ	MAT/SCH	DIA/THK	CAL BLOCKS	COMMENTS
B12.050.004G	2NI-180		CN-2NI-145	QAL-14	VT-3	SS	6.000		6" Westinghouse Check Valve. Inspect One Of The Following Valves: 2NI-126, 2NI-134, 2NI-157, 2NI-160, 2NI-175, 2NI-176, 2NI-180, Or 2NI-181. Inspect Only If Disassembled For Maintenance, Repair, Or Volumetric Examination.
Class A		NI	CNM-1205.00-63			160	0.719		
B12.050.004H	2NI-181		CN-2NI-75	QAL-14	VT-3	SS	6.000		6" Westinghouse Check Valve. Inspect One Of The Following Valves: 2NI-126, 2NI-134, 2NI-157, 2NI-160, 2NI-175, 2NI-176, 2NI-180, Or 2NI-181. Inspect Only If Disassembled For Maintenance, Repair, Or Volumetric Examination.
Class A		NI	CNM-1205.00-63			160	0.719		
B12.050.005A	2NI-54A		CN-2NI-59	QAL-14	VT-3	SS	10.000		10" Westinghouse Gate Valve. Inspect One Of The Following Valves: 2NI-54A, 2NI-65B, 2NI-76A, Or 2NI-88B. Inspect Only If Disassembled For Maintenance, Repair, Or Volumetric Examination.
Class A		NI	CNM-1205.00-71			140	1.000		
B12.050.005B	2NI-65B		CN-2NI-61	QAL-14	VT-3	SS	10.000		10" Westinghouse Gate Valve. Inspect One Of The Following Valves: 2NI-54A, 2NI-65B, 2NI-76A, Or 2NI-88B. Inspect Only If Disassembled For Maintenance, Repair, Or Volumetric Examination.
Class A		NI	CNM-1205.00-71			140	1.000		
B12.050.005C	2NI-76A		CN-2NI-63	QAL-14	VT-3	SS	10.000		10" Westinghouse Gate Valve. Inspect One Of The Following Valves: 2NI-54A, 2NI-65B, 2NI-76A, Or 2NI-88B. Inspect Only If Disassembled For Maintenance, Repair, Or Volumetric Examination.
Class A		NI	CNM-1205.00-71			140	1.000		
B12.050.005D	2NI-88B		CN-2NI-57	QAL-14	VT-3	SS	10.000		10" Westinghouse Gate Valve. Inspect One Of The Following Valves: 2NI-54A, 2NI-65B, 2NI-76A, Or 2NI-88B. Inspect Only If Disassembled For Maintenance, Repair, Or Volumetric Examination.
Class A		NI	CNM-1205.00-71			140	1.000		
B12.050.006A	2NI-59		CN-2NI-184	QAL-14	VT-3	SS	10.000		10" Westinghouse Check Valve. Inspect One Of The Following Valves: 2NI-59, 2NI-60, 2NI-70, 2NI-71, 2NI-81, 2NI-82, 2NI-93, Or 2NI-94. Inspect Only If Disassembled For Maintenance, Repair, Or Volumetric Examination.
Class A		NI	CNM-1205.00-62			140	1.000		
B12.050.006B	2NI-60		CN-2NI-184	QAL-14	VT-3	SS	10.000		10" Westinghouse Check Valve. Inspect One Of The Following Valves: 2NI-59, 2NI-60, 2NI-70, 2NI-71, 2NI-81, 2NI-82, 2NI-93, Or 2NI-94. Inspect Only If Disassembled For Maintenance, Repair, Or Volumetric Examination.
Class A		NI	CNM-1205.00-62			140	1.000		

CATEGORY B-M-2, Valve Body

Reactor Vessel

ITEM NUMBER	ID NUMBER	SYS	ISO/DWG NUMBERS	PROC	INSP REQ	MAT/SCH	DIA/THK	CAL BLOCKS	COMMENTS
B12.050.006C	2NI-70		CN-2NI-185	QAL-14	VT-3	SS	10.000		10" Westinghouse Check Valve. Inspect One Of The Following Valves: 2NI-59, 2NI-60, 2NI-70, 2NI-71, 2NI-81, 2NI-82, 2NI-93, Or 2NI-94. Inspect Only If Disassembled For Maintenance, Repair, Or Volumetric Examination.
Class A		NI	CNM-1205.00-62			140	1.000		
B12.050.006D	2NI-71		CN-2NI-185	QAL-14	VT-3	SS	10.000		10" Westinghouse Check Valve. Inspect One Of The Following Valves: 2NI-59, 2NI-60, 2NI-70, 2NI-71, 2NI-81, 2NI-82, 2NI-93, Or 2NI-94. Inspect Only If Disassembled For Maintenance, Repair, Or Volumetric Examination.
Class A		NI	CNM-1205.00-62			140	1.000		
B12.050.006E	2NI-81		CN-2NI-55	QAL-14	VT-3	SS	10.000		10" Westinghouse Check Valve. Inspect One Of The Following Valves: 2NI-59, 2NI-60, 2NI-70, 2NI-71, 2NI-81, 2NI-82, 2NI-93, Or 2NI-94. Inspect Only If Disassembled For Maintenance, Repair, Or Volumetric Examination.
Class A		NI	CNM-1205.00-62			140	1.000		
B12.050.006F	2NI-82		CN-2NI-55	QAL-14	VT-3	SS	10.000		10" Westinghouse Check Valve. Inspect One Of The Following Valves: 2NI-59, 2NI-60, 2NI-70, 2NI-71, 2NI-81, 2NI-82, 2NI-93, Or 2NI-94. Inspect Only If Disassembled For Maintenance, Repair, Or Volumetric Examination.
Class A		NI	CNM-1205.00-62			140	1.000		
B12.050.006G	2NI-93		CN-2NI-183	QAL-14	VT-3	SS	10.000		10" Westinghouse Check Valve. Inspect One Of The Following Valves: 2NI-59, 2NI-60, 2NI-70, 2NI-71, 2NI-81, 2NI-82, 2NI-93, Or 2NI-94. Inspect Only If Disassembled For Maintenance, Repair, Or Volumetric Examination.
Class A		NI	CNM-1205.00-62			140	1.000		
B12.050.006H	2NI-94		CN-2NI-183	QAL-14	VT-3	SS	10.000		10" Westinghouse Check Valve. Inspect One Of The Following Valves: 2NI-59, 2NI-60, 2NI-70, 2NI-71, 2NI-81, 2NI-82, 2NI-93, Or 2NI-94. Inspect Only If Disassembled For Maintenance, Repair, Or Volumetric Examination.
Class A		NI	CNM-1205.00-62			140	1.000		
B12.050.007A	2NI-125		CN-2NI-94	QAL-14	VT-3	SS	8.000		8" Westinghouse Check Valve. Inspect One Of The Following Valves: 2NI-125 Or 2N1-129. Inspect Only If Disassembled For Maintenance, Repair, Or Volumetric Examination.
Class A		NI	CNM-1205.00-59			160	0.906		

CATEGORY B-M-2, Valve Body

Reactor Vessel

ITEM NUMBER	ID NUMBER	SYS	ISO/DWG NUMBERS	PROC	INSP REQ	MAT/SCH	DIA/THK	CAL BLOCKS	COMMENTS
B12.050.007B	2NI-129		CN-2NI-92	QAL-14	VT-3	SS	8.000		8" Westinghouse Check Valve. Inspect One Of The Following Valves: 2NI-125 Or 2N1-129. Inspect Only If Disassembled For Maintenance, Repair, Or Volumetric Examination.
		NI	CNM-1205.00-59			160	0.906		
Class A									

Total B12.050 Items:	**31**
Total B12 Items:	**35**

CATEGORY B-O, Pressure Retaining Welds In Control Rod Housings

Reactor Vessel

ITEM NUMBER	ID NUMBER	SYS	ISO/DWG NUMBERS	PROC	INSP REQ	MAT/SCH	DIA/THK	CAL BLOCKS	COMMENTS
****** Pressure Retaining Boundary ******									
B14.010.001	2RPV-CRDM58		CNM 2201.01-74/7	NDE-35	PT	SS-Inconel	4.000		CRD Housing Weld (Peripheral).
		NC	CNM 2201.01-89				0.625		
Class A					Adapter to Housing Body				
B14.010.002	2RPV-CRDM62		CNM 2201.01-74/7	NDE-35	PT	SS-Inconel	4.000		CRD Housing Weld (Peripheral).
		NC	CNM 2201.01-89				0.625		
Class A					Adapter to Housing Body				
B14.010.003	2RPV-CRDM70		CNM 2201.01-74/7	NDE-35	PT	SS-Inconel	4.000		CRD Housing Weld (Peripheral).
		NC	CNM 2201.01-89				0.625		
Class A					Adapter to Housing Body				

Total B14.010 Items: 3

Total B14 Items: 3

CATEGORY C-A, Pressure Retaining Welds In Pressure Vessels

Tubesheet-to-Shell Weld

ITEM NUMBER	ID NUMBER	SYS	ISO/DWG NUMBERS	PROC	INSP REQ	MAT/SCH	DIA/THK	CAL BLOCKS	COMMENTS
C01.020.010	2ASWINJF-SH-HD		CN-ISIN3-2554-1.2	NDE-12	RT	SS	4.000		Seal Water Injection Filter 2A Shell Pc.1 To Head Pc.2A.
	Circumferential	NV	CNM 1201.04-74				0.674		
Class B					Shell to Head				

Total C01.020 Items: 1

Total C01 Items: 1

CATEGORY C-C, Welded Attachments For Vessels, Piping, Pumps, And Valves

Piping

DUKE ENERGY CORPORATION
INSERVICE INSPECTION PLAN MANAGEMENT
Inservice Inspection Database Management System
Catawba 2
Inservice Inspection Plan for Interval 3 Outage 5

ITEM NUMBER	ID NUMBER	SYS	ISO/DWG NUMBERS	PROC	INSP REQ	MAT/SCH	DIA/THK	CAL BLOCKS	COMMENTS
****** Welded Attachments ******									
C03.010.022	2SWIFA-SUPPORT		CNM 1201.04-74	NDE-35	PT	SS	0.000		Seal Water Injection Filter 2A.
	Rigid Support	NI	CN-ISIN3-2554-1.2				0.250		
Class B					Support Leg to Shell				

Total C03.010 Items: 1

CATEGORY C-C, Welded Attachments For Vessels, Piping, Pumps, And Valves

Pumps

ITEM NUMBER	ID NUMBER	SYS	ISO/DWG NUMBERS	PROC	INSP REQ	MAT/SCH	DIA/THK	CAL BLOCKS	COMMENTS
****** Welded Attachments ******									
C03.020.013	2-R-CF-1560		CN-2491-CF003	NDE-25	MT	CS	18.000		
	Rigid Support	CF	CN-ISIN3-2591-1.1				0.750		
Class B									

Total C03.020 Items: 1

Total C03 Items: 2

DUKE ENERGY CORPORATION
INSERVICE INSPECTION PLAN MANAGEMENT
Inservice Inspection Database Management System

Catawba 2

Inservice Inspection Plan for Interval 3 Outage 5

CATEGORY C-F-1, Pressure Retaining Welds In Austenitic SS Or High Alloy Piping

Piping Welds > 1/5 in. Nom Wall for Piping >= NPS 2 and <= NPS 4

ITEM NUMBER	ID NUMBER	SYS	ISO/DWG NUMBERS	PROC	INSP REQ	MAT/SCH	DIA/THK	CAL BLOCKS	COMMENTS
**** Piping Welds > 1/5 in. Nom Wall For Piping >= NPS 2 And <= NPS 4 ****									
C05.011.051	2CF100-60		CN-2CF-100	NDE-600	UT	SS	6.000	Component	Depending on the examiners qualifications, Procedure PDI-UT-2 may be used in lieu of NDE-600. If PDI-UT-2 is used, Calibration Block PDI-UT-2-C may be used.
	Circumferential	CF	CN-ISIN3-2591-1.1			80	0.432		
Class B					Valve 2CF168 to Elbow				
C05.011.051A	2CF100-60		CN-2CF-100	NDE-35	PT	SS	6.000		
	Circumferential	CF	CN-ISIN3-2591-1.1			80	0.432		
Class B					Valve 2CF168 to Elbow				
C05.011.052	2CF100-61		CN-2CF-100	NDE-600	UT	SS	6.000	Component	Depending on the examiners qualifications, Procedure PDI-UT-2 may be used in lieu of NDE-600. If PDI-UT-2 is used, Calibration Block PDI-UT-2-C may be used.
	Circumferential	CF	CN-ISIN3-2591-1.1			80	0.432		
Class B					Elbow to Pipe				
C05.011.052A	2CF100-61		CN-2CF-100	NDE-35	PT	SS	6.000		
	Circumferential	CF	CN-ISIN3-2591-1.1			80	0.432		
Class B					Elbow to Pipe				
C05.011.053	2CF100-62		CN-2CF-100	NDE-600	UT	SS	6.000	Component	Depending on the examiners qualifications, Procedure PDI-UT-2 may be used in lieu of NDE-600. If PDI-UT-2 is used, Calibration Block PDI-UT-2-C may be used.
	Circumferential	CF	CN-ISIN3-2591-1.1			80	0.432		
Class B					Pipe to Elbow				
C05.011.053A	2CF100-62		CN-2CF-100	NDE-35	PT	SS	6.000		
	Circumferential	CF	CN-ISIN3-2591-1.1			80	0.432		
Class B					Pipe to Elbow				
C05.011.054	2CF100-63		CN-2CF-100	NDE-600	UT	SS	6.000	Component	Depending on the examiners qualifications, Procedure PDI-UT-2 may be used in lieu of NDE-600. If PDI-UT-2 is used, Calibration Block PDI-UT-2-C may be used.
	Circumferential	CF	CN-ISIN3-2591-1.1			80	0.432		
Class B					Elbow to Pipe				
C05.011.054A	2CF100-63		CN-2CF-100	NDE-35	PT	SS	6.000		
	Circumferential	CF	CN-ISIN3-2591-1.1			80	0.432		
Class B					Elbow to Pipe				

CATEGORY C-F-1, Pressure Retaining Welds In Austenitic SS Or High Alloy Piping

Piping Welds > 1/5 in. Nom Wall for Piping >= NPS 2 and <= NPS 4

ITEM NUMBER	ID NUMBER	SYS	ISO/DWG NUMBERS	PROC	INSP REQ	MAT/SCH	DIA/THK	CAL BLOCKS	COMMENTS
C05.011.170	2ND21-19		CN-2ND-21	NDE-600	UT	SS	14.000	Component	Residual Heat Removal Heat Exchanger 2B.
	Circumferential	ND	CN-ISIN3-2561-1.1			40	0.438		Depending on the examiners qualifications,
Class B	Term end				14X8 Reducer to Residual HX 2B				Procedure PDI-UT-2 may be used in lieu of NDE-600. If PDI-UT-2 is used, Calibration Block PDI-UT-2-C may be used.
C05.011.170A	2ND21-19		CN-2ND-21	NDE-35	PT	SS	14.000		Residual Heat Removal Heat Exchanger 2B.
	Circumferential	ND	CN-ISIN3-2561-1.1			40	0.438		
Class B	Term end				14X8 Reducer to Residual HX 2B				
C05.011.171	2ND23-2		CN-2ND-23	NDE-600	UT	SS	12.000	Component	Depending on the examiners qualifications,
	Circumferential	ND	CN-ISIN3-2561-1.0			STD	0.375		Procedure PDI-UT-2 may be used in lieu of
Class B					Pipe to Elbow				NDE-600. If PDI-UT-2 is used, Calibration Block PDI-UT-2-C may be used.
C05.011.171A	2ND23-2		CN-2ND-23	NDE-35	PT	SS	12.000		
	Circumferential	ND	CN-ISIN3-2561-1.0			STD	0.375		
Class B					Pipe to Elbow				
C05.011.172	2ND23-4		CN-2ND-23	NDE-600	UT	SS	12.000	Component	Depending on the examiners qualifications,
	Circumferential	ND	CN-ISIN3-2561-1.0			STD	0.375		Procedure PDI-UT-2 may be used in lieu of
Class B					Pipe to Tee				NDE-600. If PDI-UT-2 is used, Calibration Block PDI-UT-2-C may be used.
C05.011.172A	2ND23-4		CN-2ND-23	NDE-35	PT	SS	12.000		
	Circumferential	ND	CN-ISIN3-2561-1.0			STD	0.375		
Class B					Pipe to Tee				
C05.011.305	2NI72-1		CN-2NI-72	NDE-600	UT	SS	8.000	Component	Depending on the examiners qualifications,
	Circumferential	NI	CN-ISIN3-2562-1.3			160	0.906		Procedure PDI-UT-2 may be used in lieu of
Class B					Elbow to Elbow				NDE-600. If PDI-UT-2 is used, Calibration Block PDI-UT-2-C may be used.
C05.011.305A	2NI72-1		CN-2NI-72	NDE-35	PT	SS	8.000		
	Circumferential	NI	CN-ISIN3-2562-1.3			160	0.906		
Class B					Elbow to Elbow				

CATEGORY C-F-1, Pressure Retaining Welds In Austenitic SS Or High Alloy Piping

Piping Welds > 1/5 in. Nom Wall for Piping >= NPS 2 and <= NPS 4

ITEM NUMBER	ID NUMBER	SYS	ISO/DWG NUMBERS	PROC	INSP REQ	MAT/SCH	DIA/THK	CAL BLOCKS	COMMENTS
C05.011.306 Class B	2NI72-10 Circumferential	NI	CN-2NI-72 CN-ISIN3-2562-1.3	NDE-600	UT Elbow to Pipe	SS 160	6.000 0.719	Component	Depending on the examiners qualifications, Procedure PDI-UT-2 may be used in lieu of NDE-600. If PDI-UT-2 is used, Calibration Block PDI-UT-2-C may be used.
C05.011.306A Class B	2NI72-10 Circumferential	NI	CN-2NI-72 CN-ISIN3-2562-1.3	NDE-35	PT Elbow to Pipe	SS 160	6.000 0.719		
C05.011.307 Class B	2NI72-13 Circumferential	NI	CN-2NI-72 CN-ISIN3-2562-1.3	NDE-600	UT Elbow to Pipe	SS 160	6.000 0.719	Component	Depending on the examiners qualifications, Procedure PDI-UT-2 may be used in lieu of NDE-600. If PDI-UT-2 is used, Calibration Block PDI-UT-2-C may be used.
C05.011.307A Class B	2NI72-13 Circumferential	NI	CN-2NI-72 CN-ISIN3-2562-1.3	NDE-35	PT Elbow to Pipe	SS 160	6.000 0.719		
C05.011.308 Class B	2NI72-2 Circumferential	NI	CN-2NI-72 CN-ISIN3-2562-1.3	NDE-600	UT Elbow to Tee	SS 160	8.000 0.906	Component	Depending on the examiners qualifications, Procedure PDI-UT-2 may be used in lieu of NDE-600. If PDI-UT-2 is used, Calibration Block PDI-UT-2-C may be used.
C05.011.308A Class B	2NI72-2 Circumferential	NI	CN-2NI-72 CN-ISIN3-2562-1.3	NDE-35	PT Elbow to Tee	SS 160	8.000 0.906		
C05.011.309 Class B	2NI72-3 Circumferential	NI	CN-2NI-72 CN-ISIN3-2562-1.3	NDE-600	UT Tee to 8X6 Reducer	SS 160	8.000 0.906	Component	Depending on the examiners qualifications, Procedure PDI-UT-2 may be used in lieu of NDE-600. If PDI-UT-2 is used, Calibration Block PDI-UT-2-C may be used.
C05.011.309A Class B	2NI72-3 Circumferential	NI	CN-2NI-72 CN-ISIN3-2562-1.3	NDE-35	PT Tee to 8X6 Reducer	SS 160	8.000 0.906		
C05.011.310 Class B	2NI72-4 Circumferential	NI	CN-2NI-72 CN-ISIN3-2562-1.3	NDE-600	UT 8X6 Reducer to Pipe	SS 160	6.000 0.719	Component	Depending on the examiners qualifications, Procedure PDI-UT-2 may be used in lieu of NDE-600. If PDI-UT-2 is used, Calibration Block PDI-UT-2-C may be used.

DUKE ENERGY CORPORATION
INSERVICE INSPECTION PLAN MANAGEMENT
Inservice Inspection Database Management System
Catawba 2
Inservice Inspection Plan for Interval 3 Outage 5

CATEGORY C-F-1, Pressure Retaining Welds In Austenitic SS Or High Alloy Piping

Piping Welds > 1/5 in. Nom Wall for Piping >= NPS 2 and <= NPS 4

ITEM NUMBER	ID NUMBER	SYS	ISO/DWG NUMBERS	PROC	INSP REQ	MAT/SCH	DIA/THK	CAL BLOCKS	COMMENTS
C05.011.310A	2NI72-4		CN-2NI-72	NDE-35	PT	SS	6.000		
	Circumferential	NI	CN-ISIN3-2562-1.3			160	0.719		
Class B					8X6 Reducer to Pipe				
C05.011.311	2NI72-7		CN-2NI-72	NDE-600	UT	SS	6.000	Component	Depending on the examiners qualifications, Procedure PDI-UT-2 may be used in lieu of NDE-600. If PDI-UT-2 is used, Calibration Block PDI-UT-2-C may be used.
	Circumferential	NI	CN-ISIN3-2562-1.3			160	0.719		
Class B					Pipe to Elbow				
C05.011.311A	2NI72-7		CN-2NI-72	NDE-35	PT	SS	6.000		
	Circumferential	NI	CN-ISIN3-2562-1.3			160	0.719		
Class B					Pipe to Elbow				
C05.011.312	2NI72-8		CN-2NI-72	NDE-600	UT	SS	6.000	Component	Depending on the examiners qualifications, Procedure PDI-UT-2 may be used in lieu of NDE-600. If PDI-UT-2 is used, Calibration Block PDI-UT-2-C may be used.
	Circumferential	NI	CN-ISIN3-2562-1.3			160	0.719		
Class B					Elbow to Pipe				
C05.011.312A	2NI72-8		CN-2NI-72	NDE-35	PT	SS	6.000		
	Circumferential	NI	CN-ISIN3-2562-1.3			160	0.719		
Class B					Pipe				
C05.011.313	2NI72-9		CN-2NI-72	NDE-600	UT	SS	6.000	Component	Depending on the examiners qualifications, Procedure PDI-UT-2 may be used in lieu of NDE-600. If PDI-UT-2 is used, Calibration Block PDI-UT-2-C may be used.
	Circumferential	NI	CN-ISIN3-2562-1.3			160	0.719		
Class B					Pipe to Elbow				
C05.011.313A	2NI72-9		CN-2NI-72	NDE-35	PT	SS	6.000		
	Circumferential	NI	CN-ISIN3-2562-1.3			160	0.719		
Class B					Pipe to Elbow				
C05.011.340	2NI88-6		CN-2NI-88	NDE-600	UT	SS	6.000	Component	Depending on the examiners qualifications, Procedure PDI-UT-2 may be used in lieu of NDE-600. If PDI-UT-2 is used, Calibration Block PDI-UT-2-C may be used.
	Circumferential	NI	CN-ISIN3-2562-1.3			160	0.719		
Class B					Pipe to Elbow				
C05.011.340A	2NI88-6		CN-2NI-88	NDE-35	PT	SS	6.000		
	Circumferential	NI	CN-ISIN3-2562-1.3			160	0.719		
Class B					Pipe to Elbow				

DUKE ENERGY CORPORATION
INSERVICE INSPECTION PLAN MANAGEMENT
Inservice Inspection Database Management System

Catawba 2

Inservice Inspection Plan for Interval 3 Outage 5

CATEGORY C-F-1, Pressure Retaining Welds In Austenitic SS Or High Alloy Piping

Piping Welds > 1/5 in. Nom Wall for Piping >= NPS 2 and <= NPS 4

ITEM NUMBER	ID NUMBER	SYS	ISO/DWG NUMBERS	PROC	INSP REQ	MAT/SCH	DIA/THK	CAL BLOCKS	COMMENTS
C05.011.341 Class B	2NI88-2 Circumferential	NI	CN-2NI-88 CN-ISIN3-2562-1.3	NDE-600	UT Pipe to Elbow	SS 160	8.000 0.906	Component	Depending on the examiners qualifications, Procedure PDI-UT-2 may be used in lieu of NDE-600. If PDI-UT-2 is used, Calibration Block PDI-UT-2-C may be used.
C05.011.341A Class B	2NI88-2 Circumferential	NI	CN-2NI-88 CN-ISIN3-2562-1.3	NDE-35	PT Pipe to Elbow	SS 160	8.000 0.906		
C05.011.342 Class B	2NI88-3 Circumferential	NI	CN-2NI-88 CN-ISIN3-2562-1.3	NDE-600	UT Tee to Pipe	SS 160	8.000 0.906	Component	Depending on the examiners qualifications, Procedure PDI-UT-2 may be used in lieu of NDE-600. If PDI-UT-2 is used, Calibration Block PDI-UT-2-C may be used.
C05.011.342A Class B	2NI88-3 Circumferential	NI	CN-2NI-88 CN-ISIN3-2562-1.3	NDE-35	PT Tee to Pipe	SS 160	8.000 0.906		
C05.011.343 Class B	2NI88-10 Circumferential	NI	CN-2NI-88 CN-ISIN3-2562-1.3	NDE-600	UT Pipe to 8X6 Con. Reducer	SS 160	6.000 0.719	Component	Depending on the examiners qualifications, Procedure PDI-UT-2 may be used in lieu of NDE-600. If PDI-UT-2 is used, Calibration Block PDI-UT-2-C may be used.
C05.011.343A Class B	2NI88-10 Circumferential	NI	CN-2NI-88 CN-ISIN3-2562-1.3	NDE-35	PT Pipe to 8X6 Con. Reducer	SS 160	6.000 0.719		
C05.011.344 Class B	2NI88-7 Circumferential	NI	CN-2NI-88 CN-ISIN3-2562-1.3	NDE-600	UT Elbow to Pipe	SS 160	6.000 0.719	Component	Depending on the examiners qualifications, Procedure PDI-UT-2 may be used in lieu of NDE-600. If PDI-UT-2 is used, Calibration Block PDI-UT-2-C may be used.
C05.011.344A Class B	2NI88-7 Circumferential	NI	CN-2NI-88 CN-ISIN3-2562-1.3	NDE-35	PT Elbow to Pipe	SS 160	6.000 0.719		
C05.011.345 Class B	2NI88-13 Circumferential	NI	CN-2NI-88 CN-ISIN3-2562-1.3	NDE-600	UT Pipe to Elbow	SS 160	6.000 0.719	Component	Depending on the examiners qualifications, Procedure PDI-UT-2 may be used in lieu of NDE-600. If PDI-UT-2 is used, Calibration Block PDI-UT-2-C may be used.

DUKE ENERGY CORPORATION
INSERVICE INSPECTION PLAN MANAGEMENT
Inservice Inspection Database Management System

CATEGORY C-F-1, Pressure Retaining Welds In Austenitic SS Or High Alloy Piping

Piping Welds > 1/5 in. Nom Wall for Piping >= NPS 2 and <= NPS 4

Catawba 2

Inservice Inspection Plan for Interval 3 Outage 5

ITEM NUMBER	ID NUMBER	SYS	ISO/DWG NUMBERS	PROC	INSP REQ	MAT/SCH	DIA/THK	CAL BLOCKS	COMMENTS
C05.011.345A	2NI88-13		CN-2NI-88	NDE-35	PT	SS	6.000		
	Circumferential	NI	CN-ISIN3-2562-1.3			160	0.719		
Class B					Pipe to Elbow				
C05.011.346	2NI88-14		CN-2NI-88	NDE-600	UT	SS	6.000	Component	Depending on the examiners qualifications, Procedure PDI-UT-2 may be used in lieu of NDE-600. If PDI-UT-2 is used, Calibration Block PDI-UT-2-C may be used.
	Circumferential	NI	CN-ISIN3-2562-1.3			160	0.719		
Class B					Elbow to Pipe				
C05.011.346A	2NI88-14		CN-2NI-88	NDE-35	PT	SS	6.000		
	Circumferential	NI	CN-ISIN3-2562-1.3			160	0.719		
Class B					Elbow to Pipe				
C05.011.347	2NI88-15		CN-2NI-88	NDE-600	UT	SS	6.000	Component	Depending on the examiners qualifications, Procedure PDI-UT-2 may be used in lieu of NDE-600. If PDI-UT-2 is used, Calibration Block PDI-UT-2-C may be used.
	Circumferential	NI	CN-ISIN3-2562-1.3			160	0.719		
Class B					Pipe to Elbow				
C05.011.347A	2NI88-15		CN-2NI-88	NDE-35	PT	SS	6.000		
	Circumferential	NI	CN-ISIN3-2562-1.3			160	0.719		
Class B					Pipe to Elbow				
C05.011.348	2NI88-16		CN-2NI-88	NDE-600	UT	SS	6.000	Component	Depending on the examiners qualifications, Procedure PDI-UT-2 may be used in lieu of NDE-600. If PDI-UT-2 is used, Calibration Block PDI-UT-2-C may be used.
	Circumferential	NI	CN-ISIN3-2562-1.3			160	0.719		
Class B					Elbow to Pipe				
C05.011.348A	2NI88-16		CN-2NI-88	NDE-35	PT	SS	6.000		
	Circumferential	NI	CN-ISIN3-2562-1.3			160	0.719		
Class B					Elbow to Pipe				

Total C05.011 Items: 50

CATEGORY C-F-1, Pressure Retaining Welds In Austenitic SS Or High Alloy Piping

Socket Welds

ITEM NUMBER	ID NUMBER	SYS	ISO/DWG NUMBERS	PROC	INSP REQ	MAT/SCH	DIA/THK	CAL BLOCKS	COMMENTS
C05.021.004 Class B	2CA53-50 Circumferential	CA	CN-2CA-53 CN-ISIN3-2592-1.1	NDE-600	UT Pipe to Reducer	SS-CS 80	2.000 0.218	Component	Depending on the examiners qualifications, Procedure PDI-UT-2 may be used in lieu of NDE-600. If PDI-UT-2 is used, Calibration Block PDI-UT-2-C may be used.
C05.021.004A Class B	2CA53-50 Circumferential	CA	CN-2CA-53 CN-ISIN3-2592-1.1	NDE-35	PT Pipe to Reducer	SS-CS 80	2.000 0.218		
C05.021.235 Class B	2NV23-12 Circumferential	NV	CN-2NV-23 CN-ISIN3-2554-1.1	NDE-600	UT Elbow to Pipe	SS 40	4.000 0.237	Component	Depending on the examiners qualifications, Procedure PDI-UT-2 may be used in lieu of NDE-600. If PDI-UT-2 is used, Calibration Block PDI-UT-2-C may be used.
C05.021.235A Class B	2NV23-12 Circumferential	NV	CN-2NV-23 CN-ISIN3-2554-1.1	NDE-35	PT Elbow to Pipe	SS 40	4.000 0.237		
C05.021.236 Class B	2NV23-14 Circumferential	NV	CN-2NV-23 CN-ISIN3-2554-1.1	NDE-600	UT Elbow to Pipe	SS 40	4.000 0.237	Component	Depending on the examiners qualifications, Procedure PDI-UT-2 may be used in lieu of NDE-600. If PDI-UT-2 is used, Calibration Block PDI-UT-2-C may be used.
C05.021.236A Class B	2NV23-14 Circumferential	NV	CN-2NV-23 CN-ISIN3-2554-1.1	NDE-35	PT Elbow to Pipe	SS 40	4.000 0.237		
C05.021.237 Class B	2NV23-2 Circumferential	NV	CN-2NV-23 CN-ISIN3-2554-1.1	NDE-600	UT Pipe	SS 40	4.000 0.237	Component	Depending on the examiners qualifications, Procedure PDI-UT-2 may be used in lieu of NDE-600. If PDI-UT-2 is used, Calibration Block PDI-UT-2-C may be used.
C05.021.237A Class B	2NV23-2 Circumferential	NV	CN-2NV-23 CN-ISIN3-2554-1.1	NDE-35	PT Elbow to Pipe	SS 40	4.000 0.237		

DUKE ENERGY CORPORATION
INSERVICE INSPECTION PLAN MANAGEMENT
Inservice Inspection Database Management System

CATEGORY C-F-1, Pressure Retaining Welds In Austenitic SS Or High Alloy Piping

Socket Welds

Catawba 2

Inservice Inspection Plan for Interval 3 Outage 5

ITEM NUMBER	ID NUMBER	SYS	ISO/DWG NUMBERS	PROC	INSP REQ	MAT/SCH	DIA/THK	CAL BLOCKS	COMMENTS
C05.021.238	2NV23-5		CN-2NV-23	NDE-600	UT	SS	4.000	Component	Depending on the examiners qualifications, Procedure PDI-UT-2 may be used in lieu of NDE-600. If PDI-UT-2 is used, Calibration Block PDI-UT-2-C may be used.
	Circumferential	NV	CN-ISIN3-2554-1.1			40	0.237		
Class B					Pipe to Elbow				
C05.021.238A	2NV23-5		CN-2NV-23	NDE-35	PT	SS	4.000		
	Circumferential	NV	CN-ISIN3-2554-1.1			40	0.237		
Class B					Pipe to Elbow				
C05.021.239	2NV23-6		CN-2NV-23	NDE-600	UT	SS	4.000	Component	Depending on the examiners qualifications, Procedure PDI-UT-2 may be used in lieu of NDE-600. If PDI-UT-2 is used, Calibration Block PDI-UT-2-C may be used.
	Circumferential	NV	CN-ISIN3-2554-1.1			40	0.237		
Class B					Tee to Pipe				
C05.021.239A	2NV23-6		CN-2NV-23	NDE-35	PT	SS	4.000		
	Circumferential	NV	CN-ISIN3-2554-1.1			40	0.237		
Class B					Tee to Pipe				

Total C05.021 Items: 12

DUKE ENERGY CORPORATION
INSERVICE INSPECTION PLAN MANAGEMENT
Inservice Inspection Database Management System

Catawba 2

Inservice Inspection Plan for Interval 3 Outage 5

CATEGORY C-F-1, Pressure Retaining Welds In Austenitic SS Or High Alloy Piping

Pipe Branch Connections of Branch Piping >= NPS 2

ITEM NUMBER	ID NUMBER	SYS	ISO/DWG NUMBERS	PROC	INSP REQ	MAT/SCH	DIA/THK	CAL BLOCKS	COMMENTS
C05.030.119	2NV258-10		CN-2NV-258	NDE-35	PT	SS	2.000		
	Socket	NV	CN-ISIN3-2554-1.5			160	0.344		
Class B					Pipe to Tee				
C05.030.120	2NV258-15		CN-2NV-258	NDE-35	PT	SS	2.000		
	Socket	NV	CN-ISIN3-2554-1.5			160	0.344		
Class B					Tee to Pipe				

Total C05.030 Items: 2

CATEGORY C-F-2, Pressure Retaining Welds In Carbon Or Low Alloy Steel Piping

Piping Welds > 1/5 in. Nom Wall for Piping >= NPS 2 and <= NPS 4

ITEM NUMBER	ID NUMBER	SYS	ISO/DWG NUMBERS	PROC	INSP REQ	MAT/SCH	DIA/THK	CAL BLOCKS	COMMENTS
C05.051.008 Class B	2CA68-1 Circumferential Term end	CA	CN-2CA-68 CN-ISIN3-2592-1.1	NDE-600	UT Elbow to Nozzle	CS 80	6.000 0.432	Component	Steam Generator 2D. Depending on the examiners qualifications, Procedure PDI-UT-1 may be used in lieu of NDE-600. If PDI-UT-1 is used, Calibration Block PDI-UT-1-C may be used.
C05.051.008A Class B	2CA68-1 Circumferential Term end	CA	CN-2CA-68 CN-ISIN3-2592-1.1	NDE-25	MT Elbow to Nozzle	CS 80	6.000 0.432		Steam Generator 2D.
C05.051.051 Class B	2CF-10-C Circumferential	CF	CN-2CF-38 CN-ISIN3-2591-1.1	NDE-600	UT Pipe to Elbow	CS 80	18.000 0.938	Component	Depending on the examiners qualifications, Procedure PDI-UT-1 may be used in lieu of NDE-600. If PDI-UT-1 is used, Calibration Block PDI-UT-1-C may be used.
C05.051.051A Class B	2CF-10-C Circumferential	CF	CN-2CF-38 CN-ISIN3-2591-1.1	NDE-25	MT Pipe to Elbow	CS 80	18.000 0.938		
C05.051.104 Class B	2SM12-3 Circumferential	SM	CN-2SM-12 CN-ISIN3-2593-1.0	NDE-600	UT Elbow to Pipe	CS	34.000 1.375	Component	Steam Generator 2B. Depending on the examiners qualifications, Procedure PDI-UT-1 may be used in lieu of NDE-600. If PDI-UT-1 is used, Calibration Block PDI-UT-1-C may be used.
C05.051.104A Class B	2SM12-3 Circumferential	SM	CN-2SM-12 CN-ISIN3-2593-1.0	NDE-25	MT Elbow to Pipe	CS	34.000 1.375		Steam Generator 2B.
C05.051.152 Class B	2SV18-6 Circumferential	SV	CN-2SV-18 CN-ISIN3-2593-1.0	NDE-600	UT Pipe to Valve 2SV024	CS 40	9.000 1.500	Component	Depending on the examiners qualifications, Procedure PDI-UT-1 may be used in lieu of NDE-600. If PDI-UT-1 is used, Calibration Block PDI-UT-1-C may be used.
C05.051.152A Class B	2SV18-6 Circumferential	SV	CN-2SV-18 CN-ISIN3-2593-1.0	NDE-25	MT Pipe to Valve 2SV024	CS 40	9.000 1.500		

Total C05.051 Items: 8

DUKE ENERGY CORPORATION
INSERVICE INSPECTION PLAN MANAGEMENT
Inservice Inspection Database Management System
Catawba 2
Inservice Inspection Plan for Interval 3 Outage 5

CATEGORY C-F-2, Pressure Retaining Welds In Carbon Or Low Alloy Steel Piping

Pipe Branch Connections of Branch Piping >= NPS 2

ITEM NUMBER	ID NUMBER	SYS	ISO/DWG NUMBERS	PROC	INSP REQ	MAT/SCH	DIA/THK	CAL BLOCKS	COMMENTS
C05.070.004	2CA154-11		CN-2CA-154	NDE-25	MT	CS	2.000		
	Circumferential	CA	CN-ISIN3-2592-1.1			80	0.218		
Class B					Tee to Reducing Insert				
C05.070.005	2CA154-15		CN-2CA-154	NDE-25	MT	CS	2.000		
	Circumferential	CA	CN-ISIN3-2592-1.1			80	0.218		
Class B					Tee to Pipe				

Total C05.070 Items: 2

Total C05 Items: 74

CATEGORY C-G, Pressure Retaining Welds In Pumps And Valves

Pressure Vessels

ITEM NUMBER	ID NUMBER	SYS	ISO/DWG NUMBERS	PROC	INSP REQ	MAT/SCH	DIA/THK	CAL BLOCKS	COMMENTS
****** Welded Attachments ******									
C06.020.005	2NI-103A		CNM 1205.00-231	NDE-35	PT	SS	6.000		Valve Body Weld - Valve Numbers in Valve Group 2NI-103A, 2NI-135B, 2NI-332A, 2NI-333B, 2NI-334B.
	Circumferential	NI	CN-ISIN3-2562-1.2				0.500		
Class B					Valve Body to Bonnet				

Total C06.020 Items: 1

Total C06 Items: 1

DUKE ENERGY CORPORATION
INSERVICE INSPECTION PLAN MANAGEMENT
Inservice Inspection Database Management System

Catawba 2

Inservice Inspection Plan for Interval 3 Outage 5

CATEGORY D-A, Welded Attachments For Vessels, Piping, Pumps, And Valves

Pumps

ITEM NUMBER	ID NUMBER	SYS	ISO/DWG NUMBERS	PROC	INSP REQ	MAT/SCH	DIA/THK	CAL BLOCKS	COMMENTS
****** Welded Attachments ******									
D01.020.014	2-R-KC-0005		CN-2492-KC073	QAL-13	VT-1	NA	16.000		Inspect with F01.030.066.
	Rigid Support	KC	CN-ISIN3-2573-2.0				1.000		
Class C									

Total D01.020 Items: 1

Total D01 Items: 1

CATEGORY F-A, Supports

Class 2 Piping Supports

Catawba 2
Inservice Inspection Plan for Interval 3 Outage 5

ITEM NUMBER	ID NUMBER	SYS	ISO/DWG NUMBERS	PROC	INSP REQ	MAT/SCH	DIA/THK	CAL BLOCKS	COMMENTS
****** Category A, One-Directional ******									
F01.020.012	2-R-CF-1560		CN-2491-CF003	QAL-14	VT-3	NA	18.000		
	Rigid Support	CF	CN-ISIN3-2591-1.1				0.750		
Class B									
F01.020.101	2-R-NS-1118		CN-2491-NS009	QAL-14	VT-3	NA	8.000		
	Rigid Support	NS	CN-ISIN3-2563-1.0				0.000		
Class B									
F01.020.102	2-R-NS-1119		CN-2491-NS009	QAL-14	VT-3	NA	8.000		
	Rigid Support	NS	CN-ISIN3-2563-1.0				0.000		
Class B									
Total F01.020 Items:	**3**								
****** Category B, Multi-Directional ******									
F01.021.031	2-R-ND-0379		CN-2492-ND017	QAL-14	VT-3	NA	8.000		
	Rigid Restraint	ND	CN-ISIN3-2561-1.1				0.000		
Class B									
F01.021.032	2-R-ND-0380		CN-2492-ND017	QAL-14	VT-3	NA	8.000		
	Rigid Restraint	ND	CN-ISIN3-2561-1.1				0.000		
Class B									
F01.021.156	2-R-NV-0029		CN-2492-NV045	QAL-14	VT-3	NA	8.000		
	Rigid Restraint	NV	CN-ISIN3-2554-1.7				0.000		
Class B									
F01.021.157	2-R-NV-0030		CN-2492-NV045	QAL-14	VT-3	NA	8.000		
	Rigid Restraint	NV	CN-ISIN3-2554-1.7				0.000		
Class B									
F01.021.158	2-R-NV-0297		CN-2492-NV045	QAL-14	VT-3	NA	6.000		
	Rigid Restraint	NV	CN-ISIN3-2554-1.7				0.000		
Class B									

CATEGORY F-A, Supports

Class 2 Piping Supports

Catawba 2
Inservice Inspection Plan for Interval 3 Outage 5

ITEM NUMBER	ID NUMBER	SYS	ISO/DWG NUMBERS	PROC	INSP REQ	MAT/SCH	DIA/THK	CAL BLOCKS	COMMENTS
Total F01.021 Items:	**5**								
****** Category C, Thermal Movement ******									
F01.022.061	2-R-NI-0155		CN-2492-NI011	QAL-14	VT-3	NA	6.000		
	Spring Hgr	NI	CN-ISIN3-2562-1.0				0.000		
Class B									
F01.022.062	2-R-NI-0152		CN-2492-NI012	QAL-14	VT-3	NA	6.000		
	Spring Hgr	NI	CN-ISIN3-2562-1.2				0.000		
Class B									
Total F01.022 Items:	**2**								

CATEGORY F-A, Supports

Class 3 Piping Supports

ITEM NUMBER	ID NUMBER	SYS	ISO/DWG NUMBERS	PROC	INSP REQ	MAT/SCH	DIA/THK	CAL BLOCKS	COMMENTS
****** Category A, One-Directional ******									
F01.030.065	2-R-KC-0274		CN-2492-KC070	QAL-14	VT-3	NA	16.000		
	Rigid Support	KC	CN-ISIN3-2573-1.0				0.406		
Class C									
F01.030.066	2-R-KC-0005		CN-2492-KC073	QAL-14	VT-3	NA	16.000		Inspect with D01.020.014.
	Rigid Support	KC	CN-ISIN3-2573-2.0				1.000		
Class C									
F01.030.222	2-R-VN-0060		CN-2493-VN002	QAL-14	VT-3	NA	30.000		
	Rigid Support	VN	CN-ISIN3-2609-5.0				0.000		
Class C									
F01.030.251	2-R-YC-0001		CN-2525-YC001	QAL-14	VT-3	NA	8.000		
	Rigid Support	YC	CN-ISIN3-1578-2.2				0.000		
Class C									
F01.030.252	2-R-YC-0018		CN-2525-YC001	QAL-14	VT-3	NA	6.000		
	Rigid Support	YC	CN-ISIN3-1578-2.2				0.000		
Class C									
Total F01.030 Items:	**5**								
****** Category B, Multi-Directional ******									
F01.031.063	2-R-KC-0586		CN-2492-KC348	QAL-14	VT-3	NA	6.000		
	Rigid Restraint	KC	CN-ISIN3-2573-1.0				0.000		
Class C									
F01.031.064	2-R-KC-0587		CN-2492-KC348	QAL-14	VT-3	NA	6.000		
	Rigid Restraint	KC	CN-ISIN3-2573-1.0				0.000		
Class C									
F01.031.151	2-R-RN-0171		CN-2492-RN117	QAL-14	VT-3	NA	30.000		
	Rigid Restraint	RN	CN-ISIN3-1574-1.1				0.000		
Class C									

CATEGORY F-A, Supports

Class 3 Piping Supports

ITEM NUMBER	ID NUMBER	SYS	ISO/DWG NUMBERS	PROC	INSP REQ	MAT/SCH	DIA/THK	CAL BLOCKS	COMMENTS
F01.031.152	2-R-RN-0172		CN-2492-RN117	QAL-14	VT-3	NA	30.000		
	Rigid Restraint	RN	CN-ISIN3-1574-1.1				0.000		
Class C									
F01.031.251	2-R-YC-0004		CN-2525-YC001	QAL-14	VT-3	NA	8.000		
	Rigid Restraint	YC	CN-ISIN3-1578-2.2				0.000		
Class C									

Total F01.031 Items: 5

****** Category C, Thermal Movement ******

F01.032.031	2-R-FD-0001		CN-2493-FD034	QAL-14	VT-3	NA	6.000		
	Spring Hgr	FD	CN-ISIN3-2609-3.0				0.000		
Class C									
F01.032.152	2-R-RN-0187		CN-2492-RN117	QAL-14	VT-3	NA	20.000		
	Mech Snubber	RN	CN-ISIN3-1574-1.1				0.000		
Class C									
F01.032.251	2-R-YC-0002		CN-2525-YC001	QAL-14	VT-3	NA	8.000		
	Spring Hgr	YC	CN-ISIN3-1578-2.2				0.000		
Class C									

Total F01.032 Items: 3

CATEGORY F-A, Supports

Supports Other Than Piping Supports

ITEM NUMBER	ID NUMBER	SYS	ISO/DWG NUMBERS	PROC	INSP REQ	MAT/SCH	DIA/THK	CAL BLOCKS	COMMENTS
**** Class 1, 2, and 3 ****									
F01.040.003	2SGA-COLUMNS		CN-1070-9	QAL-14	VT-3	NA	0.000		Steam Generator 2A Support Columns (4 Assemblies).
	Rigid Support	NC	CN-ISIN3-2553-1.0				0.000		
Class A									
F01.040.010	2SGC-LATERALS		CN-1070-01	QAL-14	VT-3	NA	0.000		Steam Generator 2C Lower Laterals.
	Rigid Restraint	NC	CN-ISIN3-2553-1.0				0.000		
Class A									
F01.040.105	2SWIFA-SUPPORT		CNM 1201.04-74	QAL-14	VT-3	NA	0.000		Seal Water Injection Filter 2A Support (4 Legs).
	Rigid Support	NI	CN-ISIN3-2554-1.2				0.250		
Class B					Support Leg to Shell				
F01.040.112	2NIPA-SUPPORT		CNM 1201.05-45	QAL-14	VT-3	NA	0.000		Safety Injection Pump 2A Support (4 Legs).
	Rigid Support	NI	CN-ISIN3-2562-1.2				0.000		
Class B									
F01.040.113	2NSPA-SUPPORT		CNM 1201.05-126	QAL-14	VT-3	NA	0.000		Containment Spray Pump 2A Support (4 Legs).
	Rigid Support	NS	CN-ISIN3-2563-1.0				0.000		
Class B									
F01.040.208	2TDCAP2-SUPPORT		CNM 1201.05-130	QAL-14	VT-3	NA	0.000		Turbine Driven Auxillary FeedWater Pump Support.
	Rigid Support	CA	CN-ISIN3-2592-1.0				0.000		
Class C									

Total F01.040 Items: 6

Total F01 Items: 29

ITEM NUMBER	ID NUMBER	SYS	ISO/DWG NUMBERS	PROC	INSP REQ	MAT/SCH	DIA/THK	CAL BLOCKS	COMMENTS
G01.001.003	2RCP-2C		CN-2NC-013	NDE-949	UT	CS	0.000	50237	Reactor Coolant Pump 2C Flywheel
		NC	CN-ISIN3-2553-1.0				0.000		A qualified in-place UT examination over the volume from the inner bore of the flywheel to the circle one-half of the outer radius or a surface examination (MT and/or PT) of exposed surfaces of the removed flywheels may be conducted at approximately 10 year intervals coinciding with the Inservice Inspection Schedule as required by ASME Section XI. This examination was deleted from the EOC13 (Outage 6) schedule and will be re-scheduled for examination to be performed not to exceed EOC19 Refueling Outage, as allowed by revision to Technical Specification 5.5.7 "Reactor Coolant Pump Flywheel Inspection", to increase the inspection interval from 10 years to 20 years. The technical specification revision is in accordance with Amendment No. 216 to Renewed Facility Operating Licenses NPF-35 and Amendment No. 210 to Renewed Facility Operating Licenses NPF-52 for Catawba Nuclear Station, Units 1 and 2, approved by the NRC on August 5, 2004.
Class A									

Total G01.001 Items:	**1**
Total G01 Items:	**1**

CATEGORY AUG, Augmented Inspections

ITEM NUMBER	ID NUMBER	SYS	ISO/DWG NUMBERS	PROC	INSP REQ	MAT/SCH	DIA/THK	CAL BLOCKS	COMMENTS
G03.001.001	2NC141-07	NC	CN-2NC-141 CN-ISIN3-2562-1.0	NDE-910	UT	SS	1.500 0.281	50202	Loop 2A
Class A					Nozzle to Pipe				
G03.001.002	2NC141-BEND-AA	NC	CN-2NC-141 CN-ISIN3-2562-1.0	NDE-910	UT	SS	1.500 0.281	50202	Loop 2A Pipe Bend
Class A									
G03.001.003	2NC141-06	NC	CN-2NC-141 CN-ISIN3-2562-1.0	NDE-910	UT	SS	1.500 0.281	50202	Loop 2A
Class A					Pipe to Elbow				
G03.001.004	2NC141-05	NC	CN-2NC-141 CN-ISIN3-2562-1.0	NDE-910	UT	SS	1.500 0.281	50202	Loop 2A
Class A					Pipe to Elbow				
G03.001.005	2NC145-06	NC	CN-2NC-145 CN-ISIN3-2562-1.0	NDE-910	UT	SS	1.500 0.281	50202	Loop 2B
Class A					Nozzle to Pipe				
G03.001.006	2NC145-BEND-BB	NC	CN-2NC-145 CN-ISIN3-2562-1.0	NDE-910	UT	SS	1.500 0.281	50202	Loop 2B Pipe Bend
Class A									
G03.001.007	2NC145-05	NC	CN-2NC-145 CN-ISIN3-2562-1.0	NDE-910	UT	SS	1.500 0.281	50202	Loop 2B
Class A					Pipe to Pipe				
G03.001.008	2NC145-BEND-CC	NC	CN-2NC-145 CN-ISIN3-2562-1.0	NDE-910	UT	SS	1.500 0.281	50202	Loop 2B Pipe Bend
Class A									

ITEM NUMBER	ID NUMBER	SYS	ISO/DWG NUMBERS	PROC	INSP REQ	MAT/SCH	DIA/THK	CAL BLOCKS	COMMENTS
G03.001.009	2NC146-06		CN-2NC-146	NDE-910	UT	SS	1.500	50202	Loop 2C
		NC	CN-ISIN3-2562-1.0				0.281		
Class A					Nozzle to Pipe				
G03.001.010	2NC146-BEND-AA		CN-2NC-146	NDE-910	UT	SS	1.500	50202	Loop 2C Pipe Bend
		NC	CN-ISIN3-2562-1.0				0.281		
Class A									
G03.001.011	2NC146-05		CN-2NC-146	NDE-910	UT	SS	1.500	50202	Loop 2C
		NC	CN-ISIN3-2562-1.0				0.281		
Class A					Pipe to Pipe				
G03.001.012	2NC146-BEND-BB		CN-2NC-146	NDE-910	UT	SS	1.500	50202	Loop 2C Pipe Bend
		NC	CN-ISIN3-2562-1.0				0.281		
Class A									
G03.001.013	2NC140-05		CN-2NC-140	NDE-910	UT	SS	1.500	50202	Loop 2D
		NC	CN-ISIN3-2562-1.0				0.281		
Class A					Nozzle to Pipe				
G03.001.014	2NC140-BEND-CC		CN-2NC-140	NDE-910	UT	SS	1.500	50202	Loop 2D Pipe Bend
		NC	CN-ISIN3-2562-1.0				0.281		
Class A									
G03.001.015	2NC140-BEND-BB		CN-2NC-140	NDE-910	UT	SS	1.500	50202	Loop 2D Pipe Bend
		NC	CN-ISIN3-2562-1.0				0.281		
Class A									
G03.001.016	2NC140-04		CN-2NC-140	NDE-910	UT	SS	1.500	50202	Loop 2D
		NC	CN-ISIN3-2562-1.0				0.281		
Class A					Pipe to Pipe				

Total G03.001 Items: 16

Total G03 Items: 16

ITEM NUMBER	ID NUMBER	SYS	ISO/DWG NUMBERS	PROC	INSP REQ	MAT/SCH	DIA/THK	CAL BLOCKS	COMMENTS
G05.001.002	RPV-HEAD-PEN			See Comm	VT-2	CS-Inconel	0.000		Bare metal visual examination of 100% of the reactor pressure vessel head surface (including 360 degrees around each RPV head penetration nozzle). MP/0/A/7150/042D Reactor Vessel Head Penetration Visual Inspection. Examination to be done at least every three (3) refueling outages or five (5) years, whichever occurs first. The inspections will begin in EOC-15. Time between inspections may be shortened, but not lengthened. If time between inspections is shortened, next inspection will occur at frequencies stipulated above. (For responsible individual, contact J. M. Shuping and Reactor Vessel Engineering/Materials Group). Reference NRC Order EA-03-009. This examination will utilize a site specific procedure and methods stipulated by the reactor vessel responsible engineer. NRC Order requires reporting of inspection results 30 days after restart of unit. Inspect during EOC-15 and EOC-18 (3rd Interval).
	Circumferential	NC	CN-ISIN3-2553-1.0				0.000		
Class A			CNM 2201.01-94						

Total G05.001 Items:	**1**
Total G05 Items:	**1**

ITEM NUMBER	ID NUMBER	SYS	ISO/DWG NUMBERS	PROC	INSP REQ	MAT/SCH	DIA/THK	CAL BLOCKS	COMMENTS
G06.001.001 Class A	2PZR-W4ASE Circumferential Term end Dissimilar	NC	CNM 2201.01-110/1 CNM 2201.01-110/2	QAL-15	VT-2	SS-CS	6.000 0.960		Pressurizer Safety Nozzle Safe End X-Y Quadrant. Bare Metal Visual Examination by VT-2 qualified inspector around 100% of penetration. (For responsibile individual, contact J. M. Shuping, Alloy 600 Engineer Nuclear Technical Services). Reference NRC Bulletin 2004-01). Reference Item Number G08.001.003.
G06.001.002 Class A	2PZR-W4BSE Circumferential Term end Dissimilar	NC	CNM 2201.01-110/1 CNM 2201.01-110/2	QAL-15	VT-2 Nozzle to Safe End	SS-CS	6.000 0.960		Pressurizer Safety Nozzle To Safe End. W-X Quadrant. Bare Metal Visual Examination by VT-2 qualified inspector around 100% of penetration. (For responsibile individual, contact J. M. Shuping, Alloy 600 Engineer Nuclear Technical Services). Reference NRC Bulletin 2004-01). Reference Item Number G08.001.004.
G06.001.003 Class A	2PZR-W4CSE Circumferential Term end Dissimilar	NC	CNM 2201.01-110/1 CNM 2201.01-110/2	QAL-15	VT-2 Nozzle to Safe End	SS-CS	6.000 0.960		Pressurizer Relief Nozzle To Safe End. W-Z Quadrant. Bare Metal Visual Examination by VT-2 qualified inspector around 100% of penetration. (For responsibile individual, contact J. M. Shuping, Alloy 600 Engineer Nuclear Technical Services). Reference NRC Bulletin 2004-01) . Reference Item Number G08.001.005.
G06.001.004 Class A	2PZR-W3SE Circumferential Term end Dissimilar	NC	CNM 2201.01-110/1 CNM 2201.01-110/2	QAL-15	VT-2 Nozzle to Safe End	SS-CS	6.000 0.960		Pressurizer Safety Nozzle To Safe End. Y-Z Quadrant. Bare Metal Visual Examination by VT-2 qualified inspector around 100% of penetration. (For responsibile individual, contact J. M. Shuping, Alloy 600 Engineer Nuclear Technical Services). Reference NRC Bulletin 2004-01) . Reference Item Number G08.001.002.
G06.001.005 Class A	2PZR-W1SE Circumferential Term end Dissimilar	NC	CNM 2201.01-110/1 CNM 2201.01-110/2	QAL-15	VT-2 Nozzle to Safe End	SS-CS	14.000 1.640		Pressurizer Surge Nozzle To Safe End. Bare Metal Visual Examination by VT-2 qualified inspector around 100% of penetration. (For responsibile individual, contact J. M. Shuping, Alloy 600 Engineer Nuclear Technical Services). Reference NRC Bulletin 2004-01) .

ITEM NUMBER	ID NUMBER	SYS	ISO/DWG NUMBERS	PROC	INSP REQ	MAT/SCH	DIA/THK	CAL BLOCKS	COMMENTS
									Reference Item Number G08.001.001.
G06.001.006 Class A	2PZR-W2SE Circumferential Term end Dissimilar	NC	CNM 2201.01-110/1 CNM 2201.01-110/2	QAL-15	VT-2 Nozzle to Safe End	SS-CS	4.000 0.760		Pressurizer Spray Nozzle To Safe End. Bare Metal Visual Examination by VT-2 qualified inspector around 100% of penetration. (For responsibile individual, contact J. M. Shuping, Alloy 600 Engineer Nuclear Technical Services). Reference NRC Bulletin 2004-01). Reference Item Number G08.001.006.
Total G06.001 Items:	**6**								
G06.002.001 Class A	2PZR-MANWAY	NC	CNM 2201.01-110/1 CNM 2201.01-110/2	QAL-15	VT-2	NA	0.000 0.000		Pressurizer Manway Diaphram Seal Weld. Bare Metal Visual Examination by VT-2 qualified inspector. Examine the gap between the Pressurizer Manway Cover and Manway for evidence of diaphram plate seal weld leakage. (For responsibile individual, contact J. M. Shuping, Alloy 600 Engineer Nuclear Technical Services). Reference NRC Bulletin 2004-01)
Total G06.002 Items:	**1**								
Total G06 Items:	**7**								

ITEM NUMBER	ID NUMBER	SYS	ISO/DWG NUMBERS	PROC	INSP REQ	MAT/SCH	DIA/THK	CAL BLOCKS	COMMENTS
G07.001.001 Class A	2PZR-W1SE Circumferential Term end Dissimilar	NC	CNM 2201.01-110/1 CNM 2201.01-110/2	PDI-UT-10	UT Nozzle to Safe End	SS-CS	14.000 1.640		Pressurizer Surge Nozzle To Safe End. Inspect volume and requirements per MRP-139. For responsibile individual, contact J. M. Shuping, Alloy 600 Engineer Nuclear Technical Services). Note: This weld location is also required to be inspected per ASME Section XI, Item Number B05.040.001 in Outage 5 (EOC18).
G07.001.002 Class A	2PZR-W3SE Circumferential Term end Dissimilar	NC	CNM 2201.01-110/1 CNM 2201.01-110/2	PDI-UT-10	UT Nozzle to Safe End	SS-CS	6.000 0.960		Pressurizer Safety Nozzle To Safe End. Y-Z Quadrant. Inspect volume and requirements per MRP-139. For responsibile individual, contact J. M. Shuping, Alloy 600 Engineer Nuclear Technical Services). Note: This weld location is also required to be inspected per ASME Section XI, Item Number B05.040.003 in Outage 5 (EOC18).
G07.001.003 Class A	2PZR-W4ASE Circumferential Term end Dissimilar	NC	CNM 2201.01-110/1 CNM 2201.01-110/2	PDI-UT-10	UT Nozzle to Safe End	SS-CS	6.000 0.960		Pressurizer Safety Nozzle To Safe End. X-Y Quadrant. Inspect volume and requirements per MRP-139. For responsibile individual, contact J. M. Shuping, Alloy 600 Engineer Nuclear Technical Services). Note: This weld location is also required to be inspected per ASME Section XI, Item Number B05.040.004 in Outage 5 (EOC18).
G07.001.004 Class A	2PZR-W4BSE Circumferential Term end Dissimilar	NC	CNM 2201.01-110/1 CNM 2201.01-110/2	PDI-UT-10	UT Nozzle to Safe End	SS-CS	6.000 0.960		Pressurizer Safety Nozzle To Safe End. W-X Quadrant. Inspect volume and requirements per MRP-139. For responsibile individual, contact J. M. Shuping, Alloy 600 Engineer Nuclear Technical Services). Note: This weld location is also required to be inspected per ASME Section XI, Item Number B05.040.005 in Outage 5 (EOC18).
G07.001.005 Class A	2PZR-W4CSE Circumferential Term end Dissimilar	NC	CNM 2201.01-110/1 CNM 2201.01-110/2	PDI-UT-10	UT Nozzle to Safe End	SS-CS	6.000 0.960		Pressurizer Relief Nozzle To Safe End. W-Z Quadrant. Inspect volume and requirements per MRP-139. For responsibile individual, contact J. M. Shuping, Alloy 600 Engineer Nuclear Technical Services).

ITEM NUMBER	ID NUMBER	SYS	ISO/DWG NUMBERS	PROC	INSP REQ	MAT/SCH	DIA/THK	CAL BLOCKS	COMMENTS
									Note: This weld location is also required to be inspected per ASME Section XI, Item Number B05.040.006 in Outage 2 (EOC15).□
G07.001.006 Class A	2PZR-W2SE Circumferential Term end Dissimilar	NC	CNM 2201.01-110/1 CNM 2201.01-110/2	PDI-UT-10	UT Nozzle to Safe End	SS-CS	4.000 0.760		Pressurizer Spray Nozzle To Safe End. Inspect volume and requirements per MRP-139. For responsibile individual, contact J. M. Shuping, Alloy 600 Engineer Nuclear Technical Services). Note: This weld location is also required to be inspected per ASME Section XI, Item Number B05.040.002 in Outage 2 (EOC15).

Total G07.001 Items: 6

Total G07 Items: 6

ITEM NUMBER	ID NUMBER	SYS	ISO/DWG NUMBERS	PROC	INSP REQ	MAT/SCH	DIA/THK	CAL BLOCKS	COMMENTS
G08.001.001 Class A	2PZR-W1SE Circumferential Term end Dissimilar	NC	CNM 2201.01-110/1 CNM 2201.01-110/2	QAL-15	VT-2 Nozzle to Safe End	SS-CS	14.000 1.640		Pressurizer Surge Nozzle To Safe End. Bare Metal Visual Examination by VT-2 qualified inspector per requirements of MRP-139. (For responsible individual, contact J. M. Shuping, Alloy 600 Engineer Nuclear Technical Services). Reference Item Number G06.001.005.
G08.001.002 Class A	2PZR-W3SE Circumferential Term end Dissimilar	NC	CNM 2201.01-110/1 CNM 2201.01-110/2	QAL-15	VT-2 Nozzle to Safe End	SS-CS	6.000 0.960		Pressurizer Safety Nozzle To Safe End. Y-Z Quadrant. Bare Metal Visual Examination by VT-2 qualified inspector per requirements of MRP-139. (For responsible individual, contact J. M. Shuping, Alloy 600 Engineer Nuclear Technical Services). Reference Item Number G06.001.004.
G08.001.003 Class A	2PZR-W4ASE Circumferential Term end Dissimilar	NC	CNM 2201.01-110/1 CNM 2201.01-110/2	QAL-15	VT-2 Nozzle to Safe End	SS-CS	6.000 0.960		Pressurizer Safety Nozzle To Safe End. X-Y Quadrant. Bare Metal Visual Examination by VT-2 qualified inspector per requirements of MRP-139. (For responsible individual, contact J. M. Shuping, Alloy 600 Engineer Nuclear Technical Services). Reference Item Number G06.001.001.
G08.001.004 Class A	2PZR-W4BSE Circumferential Term end Dissimilar	NC	CNM 2201.01-110/1 CNM 2201.01-110/2	QAL-15	VT-2 Nozzle to Safe End	SS-CS	6.000 0.960		Pressurizer Safety Nozzle To Safe End. W-X Quadrant. Bare Metal Visual Examination by VT-2 qualified inspector per requirements of MRP-139. (For responsible individual, contact J. M. Shuping, Alloy 600 Engineer Nuclear Technical Services). Reference Item Number G06.001.002.
G08.001.005 Class A	2PZR-W4CSE Circumferential Term end Dissimilar	NC	CNM 2201.01-110/1 CNM 2201.01-110/2	QAL-15	VT-2 Nozzle to Safe End	SS-CS	6.000 0.960		Pressurizer Relief Nozzle To Safe End. W-Z Quadrant. Bare Metal Visual Examination by VT-2 qualified inspector per requirements of MRP-139. (For responsible individual, contact J. M. Shuping, Alloy 600 Engineer Nuclear Technical Services). Reference Item Number G06.001.003.

ITEM NUMBER	ID NUMBER	SYS	ISO/DWG NUMBERS	PROC	INSP REQ	MAT/SCH	DIA/THK	CAL BLOCKS	COMMENTS
G08.001.006	2PZR-W2SE		CNM 2201.01-110/1	QAL-15	VT-2	SS-CS	4.000		Pressurizer Spray Nozzle To Safe End.
	Circumferential	NC	CNM 2201.01-110/2				0.760		Bare Metal Visual Examination by VT-2 qualified
Class A	Term end				Nozzle to				inspector per requirements of MRP-139. (For
	Dissimilar				Safe End				responsible individual, contact J. M. Shuping, Alloy 600 Engineer Nuclear Technical Services). Reference Item Number G06.001.006.
Total G08.001 Items:	**6**								
G08.002.001	2RPV202-121ASE		E 8871-171-009	QAL-15	VT-2	SS-CS	29.000		RV Outlet Nozzle To Safe End At 158 Degrees
	Circumferential	NC	CNM 2201.01-74/5				2.625		(Loop A). Reactor Building Coordinate is 22
Class A	Term end		CNM 2201.01-0205		Nozzle to				Degrees. To Be Done With B09.011.001.
	Dissimilar				Safe End				Bare Metal Visual Examination by VT-2 qualified inspector per requirements of MRP-139. (For responsible individual, contact J. M. Shuping, Alloy 600 Engineer Nuclear Technical Services). Note: This weld location is also required to be UT inspected per ASME Section XI, Item Number B05.010.006 Outage 7 (EOC20).
G08.002.002	2RPV-202-121BSE		E 8871-171-009	QAL-15	VT-2	SS-CS	29.000		RV Outlet Nozzle To Safe End At 22 Degrees (Loop
	Circumferential	NC	CNM 2201.01-74/5				2.625		B). Reactor Building Coordinate is 158 Degrees.
Class A	Term end		CNM 2201.01-0205		Nozzle to				To Be Done With B09.011.005.
	Dissimilar				Safe End				Bare Metal Visual Examination by VT-2 qualified inspector per requirements of MRP-139. (For responsible individual, contact J. M. Shuping, Alloy 600 Engineer Nuclear Technical Services). Note: This weld location is also required to be UT inspected per ASME Section XI, Item Number B05.010.005 Outage 7 (EOC20).
G08.002.003	2RPV-202-121CSE		E 8871-171-009	QAL-15	VT-2	SS-CS	29.000		RV Outlet Nozzle To Safe End At 338 Degrees
	Circumferential	NC	CNM 2201.01-74/5				2.625		(Loop C). Reactor Building Coordinate is 202
Class A	Term end		CNM 2201.01-0205		Nozzle to				Degrees. To Be Done With B09.011.009.
	Dissimilar				Safe End				Bare Metal Visual Examination by VT-2 qualified inspector per requirements of MRP-139. (For responsible individual, contact J. M. Shuping, Alloy 600 Engineer Nuclear Technical Services). Note: This weld location is also required to be UT inspected per ASME Section XI, Item Number B05.010.008 Outage 7 (EOC20).

ITEM NUMBER	ID NUMBER	SYS	ISO/DWG NUMBERS	PROC	INSP REQ	MAT/SCH	DIA/THK	CAL BLOCKS	COMMENTS
G08.002.004	2RPV-202-121DSE		E 8871-171-009	QAL-15	VT-2	SS-CS	29.000		RV Outlet Nozzle To Safe End At 202 Degrees (Loop D). Reactor Building Coordinate is 338 Degrees. To Be Done With B09.011.013. Bare Metal Visual Examination by VT-2 qualified inspector per requirements of MRP-139. (For responsible individual, contact J. M. Shuping, Alloy 600 Engineer Nuclear Technical Services). Note: This weld location is also required to be UT inspected per ASME Section XI, Item Number B05.010.001 Outage 7 (EOC20).
	Circumferential	NC	CNM 2201.01-74/5				2.625		
Class A	Term end		CNM 2201.01-0205		Nozzle to Safe End				
	Dissimilar								

Total G08.002 Items: 4

G08.003.001	2RPV-201-121ASE		E 8871-171-009	QAL-15	VT-2	SS-CS	27.500		RV Inlet Nozzle To Safe End At 113 Degrees (Loop A). Reactor Building Coordinate is 67 Degrees. To Be Done With B09.011.004. Bare Metal Visual Examination by VT-2 qualified inspector per requirements of MRP-139. (For responsible individual, contact J. M. Shuping, Alloy 600 Engineer Nuclear Technical Services). Note: This weld location is also required to be UT inspected per ASME Section XI, Item Number B05.010.002 Outage 7 (EOC20).
	Circumferential	NC	CNM 2201.01-74/5				2.500		
Class A	Term end		CNM 2201.01-0205		Nozzle to Safe End				
	Dissimilar								
G08.003.002	2RPV-201-121BSE		E 8871-171-009	QAL-15	VT-2	SS-CS	27.500		RV Inlet Nozzle To Safe End At 67 Degrees (Loop B). Reactor Building Coordinate is 113 Degrees. To Be Done With B09.011.008. Bare Metal Visual Examination by VT-2 qualified inspector per requirements of MRP-139. (For responsible individual, contact J. M. Shuping, Alloy 600 Engineer Nuclear Technical Services). Note: This weld location is also required to be UT inspected per ASME Section XI, Item Number B05.010.001 Outage 7 (EOC20).
	Circumferential	NC	CNM 2201.01-74/5				2.500		
Class A	Term end		CNM 2201.01-0205		Nozzle to Safe End				
	Dissimilar								
G08.003.003	2RPV-201-121CSE		E 8871-171-009	QAL-15	VT-2	SS-CS	27.500		RV Inlet Nozzle To Safe End At 293 Degrees (Loop C). Reactor Building Coordinate is 247 Degrees. To Be Done With B09.011.012. Bare Metal Visual Examination by VT-2 qualified inspector per requirements of MRP-139. (For
	Circumferential	NC	CNM 2201.01-74/5				2.500		
Class A	Term end		CNM 2201.01-0205		Nozzle to Safe End				
	Dissimilar								

ITEM NUMBER	ID NUMBER	SYS	ISO/DWG NUMBERS	PROC	INSP REQ	MAT/SCH	DIA/THK	CAL BLOCKS	COMMENTS
									responsible individual, contact J. M. Shuping, Alloy 600 Engineer Nuclear Technical Services). Note: This weld location is also required to be UT inspected per ASME Section XI, Item Number B05.010.004 Outage 7 (EOC20).
G08.003.004	2RPV-201-121DSE		E 8871-171-009	QAL-15	VT-2	SS-CS	27.500		RV Inlet Nozzle To Safe End At 247 Degrees (Loop D). Reactor Building Coordinate is 293 Degrees. To Be Done With B09.011.016. Bare Metal Visual Examination by VT-2 qualified inspector per requirements of MRP-139. (For responsible individual, contact J. M. Shuping, Alloy 600 Engineer Nuclear Technical Services). Note: This weld location is also required to be UT inspected per ASME Section XI, Item Number B05.010.003 Outage 7 (EOC20).
	Circumferential	NC	CNM 2201.01-74/5				2.500		
Class A	Term end		CNM 2201.01-0205		Nozzle to Safe End				
	Dissimilar								
Total G08.003 Items:	**4**								
G08.004.001	2RPV-W79-101SE		CNM 2201.01-86	QAL-15	VT-2	CS-Inconel	6.625		RV Closure Head Pc. 104-101 To UHI Tube Pc. 108-202 At 270 Degrees. Bare Metal Visual Examination by VT-2 qualified inspector per requirements of MRP-139. (For responsible individual, contact J. M. Shuping, Alloy 600 Engineer Nuclear Technical Services). Note: This weld location is also required to be UT inspected per ASME Section XI, Item Number B05.010.012 Outage 2 (EOC15).
	Circumferential	NC	E 8871-101-001				0.625		
Class A			E 8871-101-005		Nozzle to Safe End				
	Dissimilar								
G08.004.002	2RPV-W79-101		CNM 2201.01-67	QAL-15	VT-2	SS-Inconel	6.250		UHI Tube 270 Deg. PC. 108-202 to PC. 108-101 UT from Inconel Side. Bare Metal Visual Examination by VT-2 qualified inspector per requirements of MRP-139. (For responsible individual, contact J. M. Shuping, Alloy 600 Engineer Nuclear Technical Services). Note: This weld location is also required to be UT inspected per ASME Section XI, Item Number B09.011.017 Outage 2 (EOC15).
	Circumferential	NC	E 8871-108-002				0.625		
Class A					Safe End to Pipe				
	Dissimilar								

ITEM NUMBER	ID NUMBER	SYS	ISO/DWG NUMBERS	PROC	INSP REQ	MAT/SCH	DIA/THK	CAL BLOCKS	COMMENTS
G08.004.003	2RPV-W80-101SE		CNM 2201.01-86	QAL-15	VT-2	CS-Inconel	6.625		RV Closure Head Pc. 104-101 To UHI Tube Pc. 108-202 At 0 Degrees. Bare Metal Visual Examination by VT-2 qualified inspector per requirements of MRP-139. (For responsible individual, contact J. M. Shuping, Alloy 600 Engineer Nuclear Technical Services). Note: This weld location is also required to be UT inspected per ASME Section XI, Item Number B05.010.009 Outage 2 (EOC15).
	Circumferential	NC	E 8871-101-001				0.625		
Class A			E 8871-101-005		Nozzle to Safe End				
	Dissimilar								
G08.004.004	2RPV-W80-101		CNM 2201.01-67	QAL-15	VT-2	SS-Inconel	6.250		UHI Tube 0 Deg. PC. 108-202 to PC. 108-101 UT from Inconel Side. Bare Metal Visual Examination by VT-2 qualified inspector per requirements of MRP-139. (For responsible individual, contact J. M. Shuping, Alloy 600 Engineer Nuclear Technical Services). Note: This weld location is also required to be UT inspected per ASME Section XI, Item Number B09.011.018 Outage 2 (EOC15).
	Circumferential	NC	E 8871-108-002				0.625		
Class A					Safe End to Pipe				
	Dissimilar								
G08.004.005	2RPV-W81-101SE		CNM 2201.01-86	QAL-15	VT-2	CS-Inconel	6.625		RV Closure Head Pc. 104-101 To UHI Tube Pc. 108-202 At 90 Degrees. Bare Metal Visual Examination by VT-2 qualified inspector per requirements of MRP-139. (For responsible individual, contact J. M. Shuping, Alloy 600 Engineer Nuclear Technical Services). Note: This weld location is also required to be UT inspected per ASME Section XI, Item Number B05.010.010 Outage 2 (EOC15).
	Circumferential	NC	E 8871-101-001				0.625		
Class A			E 8871-101-005		Nozzle to Safe End				
	Dissimilar								
G08.004.006	2RPV-W81-101		CNM 2201.01-67	QAL-15	VT-2	SS-Inconel	6.250		UHI Tube 90 Deg. PC. 108-202 to PC. 108-101 UT from Inconel Side. Bare Metal Visual Examination by VT-2 qualified inspector per requirements of MRP-139. (For responsible individual, contact J. M. Shuping, Alloy 600 Engineer Nuclear Technical Services). Note: This weld location is also required to be UT inspected per ASME Section XI, Item Number B09.011.019 Outage 2 (EOC15).
	Circumferential	NC	E 8871-108-002				0.625		
Class A					Safe End to Pipe				
	Dissimilar								

ITEM NUMBER	ID NUMBER	SYS	ISO/DWG NUMBERS	PROC	INSP REQ	MAT/SCH	DIA/THK	CAL BLOCKS	COMMENTS
G08.004.007	2RPV-W82-101SE		CNM 2201.01-86	QAL-15	VT-2	CS-Inconel	6.625		RV Closure Head Pc. 104-101 To UHI Tube Pc. 108-202 At 180 Degrees. Bare Metal Visual Examination by VT-2 qualified inspector per requirements of MRP-139. (For responsible individual, contact J. M. Shuping, Alloy 600 Engineer Nuclear Technical Services). Note: This weld location is also required to be UT inspected per ASME Section XI, Item Number B05.010.011 Outage 2 (EOC15).
	Circumferential	NC	E 8871-101-001				0.625		
Class A			E 8871-101-005		Nozzle to Safe End				
	Dissimilar								
G08.004.008	2RPV-W82-101		CNM 2201.01-67	QAL-15	VT-2	SS-Inconel	6.250		UHI Tube 180 Deg. PC. 108-202 to PC. 108-101 UT from Inconel Side. Bare Metal Visual Examination by VT-2 qualified inspector per requirements of MRP-139. (For responsible individual, contact J. M. Shuping, Alloy 600 Engineer Nuclear Technical Services). Note: This weld location is also required to be UT inspected per ASME Section XI, Item Number B09.011.020 Outage 2 (EOC15).
	Circumferential	NC	E 8871-108-002				0.625		
Class A					Safe End to Pipe				
	Dissimilar								

Total G08.004 Items:	**8**
Total G08 Items:	**22**

Duke Power Company

Quality Assurance Technical Services

Inservice Inspection Plan For:

Catawba Unit 2

Interval 3

ISI Outage 6

Refueling Outage EOC 19

ISI Inspection Listing

Revision 0

CATEGORY B-B, Pressure Retaining Welds In Vessels Other Than Reactor Vessels

Pressurizer

DUKE ENERGY CORPORATION
INSERVICE INSPECTION PLAN MANAGEMENT
Inservice Inspection Database Management System
Catawba 2
Inservice Inspection Plan for Interval 3 Outage 6

ITEM NUMBER	ID NUMBER	SYS	ISO/DWG NUMBERS	PROC	INSP REQ	MAT/SCH	DIA/THK	CAL BLOCKS	COMMENTS
**** Head Welds ****									
B02.012.002	2PZR-W9D		CNM 2201.01-110/1	NDE-620	UT	CS	91.500	50337	Pressurizer Upper Head To Shell Longitudinal Weld.
	Longitudinal	NC	CNM 2201.01-110/2	PDI-UT-6			3.750	50236A	
Class A					Head to Shell				

Total B02.012 Items: 1

CATEGORY B-B, Pressure Retaining Welds In Vessels Other Than Reactor Vessels

Heat Exchangers (Primary Side)-Head

DUKE ENERGY CORPORATION
INSERVICE INSPECTION PLAN MANAGEMENT
Inservice Inspection Database Management System
Catawba 2
Inservice Inspection Plan for Interval 3 Outage 6

ITEM NUMBER	ID NUMBER	SYS	ISO/DWG NUMBERS	PROC	INSP REQ	MAT/SCH	DIA/THK	CAL BLOCKS	COMMENTS
**** Head Welds ****									
B02.040.001	2SGA-01-02		CNM 2201.01-102/1	NDE-620	UT	CS	0.000	50301	Steam Generator 2A Channel Head To Tubesheet.
	Circumferential	NC	CNM 2201.01-113/1	PDI-UT-6			5.160	50236A	
Class A					Head to Tubesheet				

Total B02.040 Items: 1

Total B02 Items: 2

CATEGORY B-G-1, Pressure Retaining Bolting, Greater Than 2 in. In Diameter

Reactor Vessel

ITEM NUMBER	ID NUMBER	SYS	ISO/DWG NUMBERS	PROC	INSP REQ	MAT/SCH	DIA/THK	CAL BLOCKS	COMMENTS
**** Closure Studs, in place ****									
B06.010.037	2RPV-179-102-37		E 8871-179-001	QAL-13	VT-1	CS	10.580		Reactor Vessel Closure Head Nut.
		NC	CNM 2201.01-67				1.857		
Class A									
B06.010.038	2RPV-179-102-38		E 8871-179-001	QAL-13	VT-1	CS	10.580		Reactor Vessel Closure Head Nut.
		NC	CNM 2201.01-67				1.857		
Class A									
B06.010.039	2RPV-179-102-39		E 8871-179-001	QAL-13	VT-1	CS	10.580		Reactor Vessel Closure Head Nut.
		NC	CNM 2201.01-67				1.857		
Class A									
B06.010.040	2RPV-179-102-40		E 8871-179-001	QAL-13	VT-1	CS	10.580		Reactor Vessel Closure Head Nut.
		NC	CNM 2201.01-67				1.857		
Class A									
B06.010.041	2RPV-179-102-41		E 8871-179-001	QAL-13	VT-1	CS	10.580		Reactor Vessel Closure Head Nut.
		NC	CNM 2201.01-67				1.857		
Class A									
B06.010.042	2RPV-179-102-42		E 8871-179-001	QAL-13	VT-1	CS	10.580		Reactor Vessel Closure Head Nut.
		NC	CNM 2201.01-67				1.857		
Class A									
B06.010.043	2RPV-179-102-43		E 8871-179-001	QAL-13	VT-1	CS	10.580		Reactor Vessel Closure Head Nut.
		NC	CNM 2201.01-67				1.857		
Class A									
B06.010.044	2RPV-179-102-44A		E 8871-179-001	QAL-13	VT-1	CS	10.580		Reactor Vessel Closure Head Nut.
		NC	CNM 2201.01-67				1.857		
Class A									

CATEGORY B-G-1, Pressure Retaining Bolting, Greater Than 2 in. In Diameter

Reactor Vessel

ITEM NUMBER	ID NUMBER	SYS	ISO/DWG NUMBERS	PROC	INSP REQ	MAT/SCH	DIA/THK	CAL BLOCKS	COMMENTS
B06.010.045	2RPV-179-102-45		E 8871-179-001	QAI-13	VT-1	CS	10.580		Reactor Vessel Closure Head Nut.
		NC	CNM 2201.01-67				1.857		
Class A									
B06.010.046	2RPV-179-102-46		E 8871-179-001	QAI-13	VT-1	CS	10.580		Reactor Vessel Closure Head Nut.
		NC	CNM 2201.01-67				1.857		
Class A									
B06.010.047	2RPV-179-102-47		E 8871-179-001	QAI-13	VT-1	CS	10.580		Reactor Vessel Closure Head Nut.
		NC	CNM 2201.01-67				1.857		
Class A									
B06.010.048	2RPV-179-102-48		E 8871-179-001	QAI-13	VT-1	CS	10.580		Reactor Vessel Closure Head Nut.
		NC	CNM 2201.01-67				1.857		
Class A									
B06.010.049	2RPV-179-102-49		E 8871-179-001	QAL-13	VT-1	CS	10.580		Reactor Vessel Closure Head Nut.
		NC	CNM 2201.01-67				1.857		
Class A									
B06.010.050	2RPV-179-102-50		E 8871-179-001	QAL-13	VT-1	CS	10.580		Reactor Vessel Closure Head Nut.
		NC	CNM 2201.01-67				1.857		
Class A									
B06.010.051	2RPV-179-102-51		E 8871-179-001	QAL-13	VT-1	CS	10.580		Reactor Vessel Closure Head Nut.
		NC	CNM 2201.01-67				1.857		
Class A									
B06.010.052	2RPV-179-102-52		E 8871-179-001	QAL-13	VT-1	CS	10.580		Reactor Vessel Closure Head Nut.
		NC	CNM 2201.01-67				1.857		
Class A									
B06.010.053	2RPV-179-102-53		E 8871-179-001	QAL-13	VT-1	CS	10.580		Reactor Vessel Closure Head Nut.
		NC	CNM 2201.01-67				1.857		
Class A									

CATEGORY B-G-1, Pressure Retaining Bolting, Greater Than 2 in. In Diameter

Reactor Vessel

ITEM NUMBER	ID NUMBER	SYS	ISO/DWG NUMBERS	PROC	INSP REQ	MAT/SCH	DIA/THK	CAL BLOCKS	COMMENTS
B06.010.054	2RPV-179-102-54		E 8871-179-001	QAI-13	VT-1	CS	10.580		Reactor Vessel Closure Head Nut.
		NC	CNM 2201.01-67				1.857		
Class A									

Total B06.010 Items: 18

CATEGORY B-G-1, Pressure Retaining Bolting, Greater Than 2 in. In Diameter

Reactor Vessel

ITEM NUMBER	ID NUMBER	SYS	ISO/DWG NUMBERS	PROC	INSP REQ	MAT/SCH	DIA/THK	CAL BLOCKS	COMMENTS
**** Threads in Flange ****									
B06.030.037	2RPV-179-101-37	NC	E 8871-179-001 CNM 2201.01-67	PDI-UT-5	UT	CS	7.000 57.688	50501	Reactor Vessel Closure Head Stud.
Class A									
B06.030.038	2RPV-179-101-38	NC	E 8871-179-001 CNM 2201.01-67	PDI-UT-5	UT	CS	7.000 57.688	50501	Reactor Vessel Closure Head Stud.
Class A									
B06.030.039	2RPV-179-101-39	NC	E 8871-179-001 CNM 2201.01-67	PDI-UT-5	UT	CS	7.000 57.688	50501	Reactor Vessel Closure Head Stud.
Class A									
B06.030.040	2RPV-179-101-40	NC	E 8871-179-001 CNM 2201.01-67	PDI-UT-5	UT	CS	7.000 57.688	50501	Reactor Vessel Closure Head Stud.
Class A									
B06.030.041	2RPV-179-101-41	NC	E 8871-179-001 CNM 2201.01-67	PDI-UT-5	UT	CS	7.000 57.688	50501	Reactor Vessel Closure Head Stud.
Class A									
B06.030.042	2RPV-179-101-42	NC	E 8871-179-001 CNM 2201.01-67	PDI-UT-5	UT	CS	7.000 57.688	50501	Reactor Vessel Closure Head Stud.
Class A									
B06.030.043	2RPV-179-101-43	NC	E 8871-179-001 CNM 2201.01-67	PDI-UT-5	UT	CS	7.000 57.688	50501	Reactor Vessel Closure Head Stud.
Class A									
B06.030.044	2RPV-179-101-44A	NC	E 8871-179-001 CNM 2201.01-67	PDI-UT-5	UT	CS	7.000 57.688	50501	Reactor Vessel Closure Head Stud.
Class A									

CATEGORY B-G-1, Pressure Retaining Bolting, Greater Than 2 in. In Diameter

Reactor Vessel

ITEM NUMBER	ID NUMBER	SYS	ISO/DWG NUMBERS	PROC	INSP REQ	MAT/SCH	DIA/THK	CAL BLOCKS	COMMENTS
B06.030.045	2RPV-179-101-45		E 8871-179-001	PDI-UT-5	UT	CS	7.000	50501	Reactor Vessel Closure Head Stud.
		NC	CNM 2201.01-67				57.688		
Class A									
B06.030.046	2RPV-179-101-46		E 8871-179-001	PDI-UT-5	UT	CS	7.000	50501	Reactor Vessel Closure Head Stud.
		NC	CNM 2201.01-67				57.688		
Class A									
B06.030.047	2RPV-179-101-47		E 8871-179-001	PDI-UT-5	UT	CS	7.000	50501	Reactor Vessel Closure Head Stud.
		NC	CNM 2201.01-67				57.688		
Class A									
B06.030.048	2RPV-179-101-48		E 8871-179-001	PDI-UT-5	UT	CS	7.000	50501	Reactor Vessel Closure Head Stud.
		NC	CNM 2201.01-67				57.688		
Class A									
B06.030.049	2RPV-179-101-49		E 8871-179-001	PDI-UT-5	UT	CS	7.000	50501	Reactor Vessel Closure Head Stud.
		NC	CNM 2201.01-67				57.688		
Class A									
B06.030.050	2RPV-179-101-50		E 8871-179-001	PDI-UT-5	UT	CS	7.000	50501	Reactor Vessel Closure Head Stud.
		NC	CNM 2201.01-67				57.688		
Class A									
B06.030.051	2RPV-179-101-51		E 8871-179-001	PDI-UT-5	UT	CS	7.000	50501	Reactor Vessel Closure Head Stud.
		NC	CNM 2201.01-67				57.688		
Class A									
B06.030.052	2RPV-179-101-52		E 8871-179-001	PDI-UT-5	UT	CS	7.000	50501	Reactor Vessel Closure Head Stud.
		NC	CNM 2201.01-67				57.688		
Class A									
B06.030.053	2RPV-179-101-53		E 8871-179-001	PDI-UT-5	UT	CS	7.000	50501	Reactor Vessel Closure Head Stud.
		NC	CNM 2201.01-67				57.688		
Class A									

CATEGORY B-G-1, Pressure Retaining Bolting, Greater Than 2 in. In Diameter

Reactor Vessel

ITEM NUMBER	ID NUMBER	SYS	ISO/DWG NUMBERS	PROC	INSP REQ	MAT/SCH	DIA/THK	CAL BLOCKS	COMMENTS
B06.030.054	2RPV-179-101-54		E 8871-179-001	PDI-UT-5	UT	CS	7.000	50501	Reactor Vessel Closure Head Stud.
		NC	CNM 2201.01-67				57.688		
Class A									

Total B06.030 Items: 18

CATEGORY B-G-1, Pressure Retaining Bolting, Greater Than 2 in. In Diameter

Reactor Vessel

ITEM NUMBER	ID NUMBER	SYS	ISO/DWG NUMBERS	PROC	INSP REQ	MAT/SCH	DIA/THK	CAL BLOCKS	COMMENTS
**** Closure Washers, Bushings ****									
B06.040.037	2RPV-THREAD-37		E 8871-126-002	NDE-640	UT	CS	7.000	40387	Threads in Reactor Vessel Flange.
		NC	CNM 2201.01-52				12.000		
Class A									
B06.040.038	2RPV-THREAD-38		E 8871-126-002	NDE-640	UT	CS	7.000	40387	Threads in Reactor Vessel Flange.
		NC	CNM 2201.01-52				12.000		
Class A									
B06.040.039	2RPV-THREAD-39		E 8871-126-002	NDE-640	UT	CS	7.000	40387	Threads in Reactor Vessel Flange.
		NC	CNM 2201.01-52				12.000		
Class A									
B06.040.040	2RPV-THREAD-40		E 8871-126-002	NDE-640	UT	CS	7.000	40387	Threads in Reactor Vessel Flange.
		NC	CNM 2201.01-52				12.000		
Class A									
B06.040.041	2RPV-THREAD-41		E 8871-126-002	NDE-640	UT	CS	7.000	40387	Threads in Reactor Vessel Flange.
		NC	CNM 2201.01-52				12.000		
Class A									
B06.040.042	2RPV-THREAD-42		E 8871-126-002	NDE-640	UT	CS	7.000	40387	Threads in Reactor Vessel Flange.
		NC	CNM 2201.01-52				12.000		
Class A									
B06.040.043	2RPV-THREAD-43		E 8871-126-002	NDE-640	UT	CS	7.000	40387	Threads in Reactor Vessel Flange.
		NC	CNM 2201.01-52				12.000		
Class A									
B06.040.044	2RPV-THREAD-44		E 8871-126-002	NDE-640	UT	CS	7.000	40387	Threads in Reactor Vessel Flange.
		NC	CNM 2201.01-52				12.000		
Class A									

CATEGORY B-G-1, Pressure Retaining Bolting, Greater Than 2 in. In Diameter

Reactor Vessel

ITEM NUMBER	ID NUMBER	SYS	ISO/DWG NUMBERS	PROC	INSP REQ	MAT/SCH	DIA/THK	CAL BLOCKS	COMMENTS
B06.040.045	2RPV-THREAD-45		E 8871-126-002	NDE-640	UT	CS	7.000	40387	Threads in Reactor Vessel Flange.
		NC	CNM 2201.01-52				12.000		
Class A									
B06.040.046	2RPV-THREAD-46		E 8871-126-002	NDE-640	UT	CS	7.000	40387	Threads in Reactor Vessel Flange.
		NC	CNM 2201.01-52				12.000		
Class A									
B06.040.047	2RPV-THREAD-47		E 8871-126-002	NDE-640	UT	CS	7.000	40387	Threads in Reactor Vessel Flange.
		NC	CNM 2201.01-52				12.000		
Class A									
B06.040.048	2RPV-THREAD-48		E 8871-126-002	NDE-640	UT	CS	7.000	40387	Threads in Reactor Vessel Flange.
		NC	CNM 2201.01-52				12.000		
Class A									
B06.040.049	2RPV-THREAD-49		E 8871-126-002	NDE-640	UT	CS	7.000	40387	Threads in Reactor Vessel Flange.
		NC	CNM 2201.01-52				12.000		
Class A									
B06.040.050	2RPV-THREAD-50		E 8871-126-002	NDE-640	UT	CS	7.000	40387	Threads in Reactor Vessel Flange.
		NC	CNM 2201.01-52				12.000		
Class A									
B06.040.051	2RPV-THREAD-51		E 8871-126-002	NDE-640	UT	CS	7.000	40387	Threads in Reactor Vessel Flange.
		NC	CNM 2201.01-52				12.000		
Class A									
B06.040.052	2RPV-THREAD-52		E 8871-126-002	NDE-640	UT	CS	7.000	40387	Threads in Reactor Vessel Flange.
		NC	CNM 2201.01-52				12.000		
Class A									
B06.040.053	2RPV-THREAD-53		E 8871-126-002	NDE-640	UT	CS	7.000	40387	Threads in Reactor Vessel Flange.
		NC	CNM 2201.01-52				12.000		
Class A									

CATEGORY B-G-1, Pressure Retaining Bolting, Greater Than 2 in. In Diameter

Reactor Vessel

ITEM NUMBER	ID NUMBER	SYS	ISO/DWG NUMBERS	PROC	INSP REQ	MAT/SCH	DIA/THK	CAL BLOCKS	COMMENTS
B06.040.054	2RPV-THREAD-54		E 8871-126-002	NDE-640	UT	CS	7.000	40387	Threads in Reactor Vessel Flange.
		NC	CNM 2201.01-52				12.000		
Class A									

Total B06.040 Items: 18

CATEGORY B-G-1, Pressure Retaining Bolting, Greater Than 2 in. In Diameter

Pressurizer

ITEM NUMBER	ID NUMBER	SYS	ISO/DWG NUMBERS	PROC	INSP REQ	MAT/SCH	DIA/THK	CAL BLOCKS	COMMENTS
**** Bolts and Studs ****									
B06.050.037	2RPV-179-103-37		E 8871-179-001	QAL-13	VT-1	CS	10.560		Reactor Vessel Closure Head Washer.
		NC	CNM 2201.01-67				1.719		
Class A									
B06.050.038	2RPV-179-103-38		E 8871-179-001	QAL-13	VT-1	CS	10.560		Reactor Vessel Closure Head Washer.
		NC	CNM 2201.01-67				1.719		
Class A									
B06.050.039	2RPV-179-103-39		E 8871-179-001	QAL-13	VT-1	CS	10.560		Reactor Vessel Closure Head Washer.
		NC	CNM 2201.01-67				1.719		
Class A									
B06.050.040	2RPV-179-103-40		E 8871-179-001	QAL-13	VT-1	CS	10.560		Reactor Vessel Closure Head Washer.
		NC	CNM 2201.01-67				1.719		
Class A									
B06.050.041	2RPV-179-103-41		E 8871-179-001	QAL-13	VT-1	CS	10.560		Reactor Vessel Closure Head Washer.
		NC	CNM 2201.01-67				1.719		
Class A									
B06.050.042	2RPV-179-103-42		E 8871-179-001	QAL-13	VT-1	CS	10.560		Reactor Vessel Closure Head Washer.
		NC	CNM 2201.01-67				1.719		
Class A									
B06.050.043	2RPV-179-103-43		E 8871-179-001	QAL-13	VT-1	CS	10.560		Reactor Vessel Closure Head Washer.
		NC	CNM 2201.01-67				1.719		
Class A									
B06.050.044	2RPV-179-103-44		E 8871-179-001	QAL-13	VT-1	CS	10.560		Reactor Vessel Closure Head Washer.
		NC	CNM 2201.01-67				1.719		
Class A									

CATEGORY B-G-1, Pressure Retaining Bolting, Greater Than 2 in. In Diameter

Pressurizer

ITEM NUMBER	ID NUMBER	SYS	ISO/DWG NUMBERS	PROC	INSP REQ	MAT/SCH	DIA/THK	CAL BLOCKS	COMMENTS
B06.050.045	2RPV-179-103-45		E 8871-179-001	QAL-13	VT-1	CS	10.560		Reactor Vessel Closure Head Washer.
		NC	CNM 2201.01-67				1.719		
Class A									
B06.050.046	2RPV-179-103-46		E 8871-179-001	QAL-13	VT-1	CS	10.560		Reactor Vessel Closure Head Washer.
		NC	CNM 2201.01-67				1.719		
Class A									
B06.050.047	2RPV-179-103-47		E 8871-179-001	QAL-13	VT-1	CS	10.560		Reactor Vessel Closure Head Washer.
		NC	CNM 2201.01-67				1.719		
Class A									
B06.050.048	2RPV-179-103-48		E 8871-179-001	QAL-13	VT-1	CS	10.560		Reactor Vessel Closure Head Washer.
		NC	CNM 2201.01-67				1.719		
Class A									
B06.050.049	2RPV-179-103-49		E 8871-179-001	QAL-13	VT-1	CS	10.560		Reactor Vessel Closure Head Washer.
		NC	CNM 2201.01-67				1.719		
Class A									
B06.050.050	2RPV-179-103-50		E 8871-179-001	QAL-13	VT-1	CS	10.560		Reactor Vessel Closure Head Washer.
		NC	CNM 2201.01-67				1.719		
Class A									
B06.050.051	2RPV-179-103-51		E 8871-179-001	QAL-13	VT-1	CS	10.560		Reactor Vessel Closure Head Washer.
		NC	CNM 2201.01-67				1.719		
Class A									
B06.050.052	2RPV-179-103-52		E 8871-179-001	QAL-13	VT-1	CS	10.560		Reactor Vessel Closure Head Washer.
		NC	CNM 2201.01-67				1.719		
Class A									
B06.050.053	2RPV-179-103-53		E 8871-179-001	QAL-13	VT-1	CS	10.560		Reactor Vessel Closure Head Washer.
		NC	CNM 2201.01-67				1.719		
Class A									

CATEGORY B-G-1, Pressure Retaining Bolting, Greater Than 2 in. In Diameter

Pressurizer

ITEM NUMBER	ID NUMBER	SYS	ISO/DWG NUMBERS	PROC	INSP REQ	MAT/SCH	DIA/THK	CAL BLOCKS	COMMENTS
B06.050.054	2RPV-179-103-54		E 8871-179-001	QAL-13	VT-1	CS	10.560		Reactor Vessel Closure Head Washer.
		NC	CNM 2201.01-67				1.719		
Class A									

Total B06.050 Items: 18

CATEGORY B-G-1, Pressure Retaining Bolting, Greater Than 2 in. In Diameter

Pumps

ITEM NUMBER	ID NUMBER	SYS	ISO/DWG NUMBERS	PROC	INSP REQ	MAT/SCH	DIA/THK	CAL BLOCKS	COMMENTS
****** Nuts, Bushings, and Washers ******									
B06.190.001	2RCP-2A-FLANGE		CN-2NC-009	QAL-13	VT-1	SS	0.000		Reactor Colant Pump 2A Main Flange Surface.
		NC	CNM 2201.01-115				0.000		Examine When Connection Is Disassembled.
Class A									
B06.190.002	2RCP-2B-FLANGE		CN-2NC-011	QAL-13	VT-1	SS	0.000		Reactor Colant Pump 2B Main Flange Surface.
		NC	CNM 2201.01-115				0.000		Examine When Connection Is Disassembled.
Class A									
B06.190.003	2RCP-2C-FLANGE		CN-2NC-013	QAL-13	VT-1	SS	0.000		Reactor Colant Pump 2C Main Flange Surface.
		NC	CNM 2201.01-115				0.000		Examine When Connection Is Disassembled.
Class A									
B06.190.004	2RCP-2D-FLANGE		CN-2NC-015	QAL-13	VT-1	SS	0.000		Reactor Colant Pump 2D Main Flange Surface.
		NC	CNM 2201.01-115				0.000		Examine When Connection Is Disassembled.
Class A									

Total B06.190 Items: 4

Total B06 Items: 76

DUKE ENERGY CORPORATION
INSERVICE INSPECTION PLAN MANAGEMENT
Inservice Inspection Database Management System
Catawba 2
Inservice Inspection Plan for Interval 3 Outage 6

CATEGORY B-G-2, Pressure Retaining Bolting, 2 in. And Less In Diameter

Steam Generators

ITEM NUMBER	ID NUMBER	SYS	ISO/DWG NUMBERS	PROC	INSP REQ	MAT/SCH	DIA/THK	CAL BLOCKS	COMMENTS
****** Bolts, Studs, and Nuts ******									
B07.020.001	2PZR-MWB			QAL-13	VT-1	CS	1.880		Pressurizer Manway Bolting (16 Bolts).
			CNM 2201.01-110/1				8.900		Examine All Bolting Material.
Class A			CNM 2201.01-110/2						

Total B07.020 Items: 1

DUKE ENERGY CORPORATION
INSERVICE INSPECTION PLAN MANAGEMENT
Inservice Inspection Database Management System
Catawba 2
Inservice Inspection Plan for Interval 3 Outage 6

CATEGORY B-G-2, Pressure Retaining Bolting, 2 in. And Less In Diameter

Heat Exchangers

ITEM NUMBER	ID NUMBER	SYS	ISO/DWG NUMBERS	PROC	INSP REQ	MAT/SCH	DIA/THK	CAL BLOCKS	COMMENTS
****** Bolts, Studs, and Nuts ******									
B07.030.007	2SGD-MW-W-X			QAL-13	VT-1	CS	1.880		Steam Generator 2D Manway Bolting (16 Studs and Nuts). Primary Manway in W-X Quadrant (Inlet Side). Examine All Bolting Material.
			CNM 2201.01-59/1				0.000		
Class A			CNM 2201.01-114/1						
B07.030.008	2SGD-MW-Z-W			QAL-13	VT-1	CS	1.880		Steam Generator 2D Manway Bolting (16 Studs and Nuts). Primary Manway in Z-W Quadrant (Outlet Side). Examine All Bolting Material.
			CNM 2201.01-59/1				0.000		
Class A			CNM 2201.01-114/1						

Total B07.030 Items: 2

CATEGORY B-G-2, Pressure Retaining Bolting, 2 in. And Less In Diameter

Pumps

ITEM NUMBER	ID NUMBER	SYS	ISO/DWG NUMBERS	PROC	INSP REQ	MAT/SCH	DIA/THK	CAL BLOCKS	COMMENTS
****** Bolts, Studs, and Nuts ******									
B07.050.001	2NC112-MJ1		CN-2NC-112	QAL-13	VT-1	CS	2.000		Flange Bolting (8 Studs, 16 Nuts). Examine All Bolting Material.
		NC	CN-ISIN3-2553-1.1				14.000		
Class A									
B07.050.002	2NC119-MJ1		CN-2NC-119	QAL-13	VT-1	CS	2.000		Flange Bolting (8 Studs, 16 Nuts). Examine All Bolting Material.
		NC	CN-ISIN3-2553-1.1				14.000		
Class A									
B07.050.003	2NC163-MJ1		CN-2NC-163	QAL-13	VT-1	CS	2.000		Flange Bolting (8 Studs, 16 Nuts). Examine All Bolting Material.
		NC	CN-ISIN3-2553-1.1				14.000		
Class A									

Total B07.050 Items: 3

CATEGORY B-G-2, Pressure Retaining Bolting, 2 in. And Less In Diameter

CRD Housings

ITEM NUMBER	ID NUMBER	SYS	ISO/DWG NUMBERS	PROC	INSP REQ	MAT/SCH	DIA/THK	CAL BLOCKS	COMMENTS
****** Bolts, Studs, and Nuts ******									
B07.070.001	2NC-1		CN-2NC-112	QAL-13	VT-1	CS	1.000		6" Valve (12 Studs, 12 Nuts). Examine All Studs And Nuts. Inspect Only One Valve In This Group Per Interval.
		NC	CNM-1205.09-01				0.000		
Class A									
B07.070.023	2NI-125		CN-2NI-94	QAL-13	VT-1	SS	1.250		8" Valve (16 Studs, 16 Nuts). Examine All Studs And Nuts. Inspect Only One Valve In This Group Per Interval.
		NI	CNM-1205.00-59				7.750		
Class A									
B07.070.024	2NI-126		CN-2NI-379	QAL-13	VT-1	SS	1.250		6" Valve (16 Studs, 16 Nuts). Examine All Studs And Nuts. Inspect Only One Valve In This Group Per Interval.
		NI	CNM-1205.00-63				7.750		
Class A									

Total B07.070 Items: 3

DUKE ENERGY CORPORATION
INSERVICE INSPECTION PLAN MANAGEMENT
Inservice Inspection Database Management System
Catawba 2
Inservice Inspection Plan for Interval 3 Outage 6

CATEGORY B-G-2, Pressure Retaining Bolting, 2 in. And Less In Diameter

NPS 4 or Larger

ITEM NUMBER	ID NUMBER	SYS	ISO/DWG NUMBERS	PROC	INSP REQ	MAT/SCH	DIA/THK	CAL BLOCKS	COMMENTS
B07.080.001	2CRD-HOUSING		CNM 2201.01-74/7	QAL-13	VT-1	SS	6.000		Threaded Housing With Seal Weld. Examine Only CRD Bolting That Is Resued When Housing Is Disassembled.
			CNM 2201.01-89				0.000		
Class A									

Total B07.080 Items: 1

Total B07 Items: 10

CATEGORY B-J, Pressure Retaining Welds In Piping

Less Than NPS 4

ITEM NUMBER	ID NUMBER	SYS	ISO/DWG NUMBERS	PROC	INSP REQ	MAT/SCH	DIA/THK	CAL BLOCKS	COMMENTS
B09.011.021 Class A	2NC112-2 Circumferential	NC	CN-2NC-112 CN-ISIN3-2553-1.1	NDE-600	UT Pipe to Elbow	SS 160	6.000 0.719	Component	Depending on the examiners qualifications, Procedure PDI-UT-2 may be used in lieu of NDE-600. If PDI-UT-2 is used, Calibration Block PDI-UT-2-C may be used.
B09.011.021A Class A	2NC112-2 Circumferential	NC	CN-2NC-112 CN-ISIN3-2553-1.1	NDE-35	PT Pipe to Elbow	SS 160	6.000 0.719		
B09.011.023 Class A	2NC112-5 Circumferential	NC	CN-2NC-112 CN-ISIN3-2553-1.1	NDE-600	UT Safe End to Elbow	SS 160	6.000 0.719	Component	Pressurizer Relief Line. Depending on the examiners qualifications, Procedure PDI-UT-2 may be used in lieu of NDE-600. If PDI-UT-2 is used, Calibration Block PDI-UT-2-C may be used.
B09.011.023A Class A	2NC112-5 Circumferential	NC	CN-2NC-112 CN-ISIN3-2553-1.1	NDE-35	PT Safe End to Elbow	SS 160	6.000 0.719		
B09.011.026 Class A	2NC119-1 Circumferential	NC	CN-2NC-119 CN-ISIN3-2553-1.1	NDE-600	UT Safe End to Elbow	SS 160	6.000 0.719	Component	Pressurizer Safety Line. Depending on the examiners qualifications, Procedure PDI-UT-2 may be used in lieu of NDE-600. If PDI-UT-2 is used, Calibration Block PDI-UT-2-C may be used.
B09.011.026A Class A	2NC119-1 Circumferential	NC	CN-2NC-119 CN-ISIN3-2553-1.1	NDE-35	PT Elbow Safe End to Elbow	SS 160	6.000 0.719		Pressurizer Safety Line.
B09.011.028 Class A	2NC163-1 Circumferential	NC	CN-2NC-163 CN-ISIN3-2553-1.1	NDE-600	UT Safe End to Elbow	SS 160	6.000 0.719	Component	Pressurizer Safety Line. Depending on the examiners qualifications, Procedure PDI-UT-2 may be used in lieu of NDE-600. If PDI-UT-2 is used, Calibration Block PDI-UT-2-C may be used.
B09.011.028A Class A	2NC163-1 Circumferential	NC	CN-2NC-163 CN-ISIN3-2553-1.1	NDE-35	PT Safe End to Elbow	SS 160	6.000 0.719		

CATEGORY B-J, Pressure Retaining Welds In Piping

Less Than NPS 4

ITEM NUMBER	ID NUMBER	SYS	ISO/DWG NUMBERS	PROC	INSP REQ	MAT/SCH	DIA/THK	CAL BLOCKS	COMMENTS
B09.011.029	2NC163-3		CN-2NC-163	NDE-600	UT	SS	6.000	Component	Depending on the examiners qualifications, Procedure PDI-UT-2 may be used in lieu of NDE-600. If PDI-UT-2 is used, Calibration Block PDI-UT-2-C may be used.
	Circumferential	NC	CN-ISIN3-2553-1.1			160	0.719		
Class A					Elbow to Pipe				
B09.011.029A	2NC163-3		CN-2NC-163	NDE-35	PT	SS	6.000		
	Circumferential	NC	CN-ISIN3-2553-1.1			160	0.719		
Class A					Elbow to Pipe				
B09.011.030	2NC163-4		CN-2NC-163	NDE-600	UT	SS	6.000	Component	Depending on the examiners qualifications, Procedure PDI-UT-2 may be used in lieu of NDE-600. If PDI-UT-2 is used, Calibration Block PDI-UT-2-C may be used.
	Circumferential	NC	CN-ISIN3-2553-1.1			160	0.719		
Class A					Pipe to Elbow				
B09.011.030A	2NC163-4		CN-2NC-163	NDE-35	PT	SS	6.000		
	Circumferential	NC	CN-ISIN3-2553-1.1			160	0.719		
Class A					Pipe to Elbow				
B09.011.031	2NC163-6		CN-2NC-163	NDE-600	UT	SS	6.000	Component	Depending on the examiners qualifications, Procedure PDI-UT-2 may be used in lieu of NDE-600. If PDI-UT-2 is used, Calibration Block PDI-UT-2-C may be used.
	Circumferential	NC	CN-ISIN3-2553-1.1			160	0.719		
Class A					Pipe to Flange				
B09.011.031A	2NC163-6		CN-2NC-163	NDE-35	PT	SS	6.000		
	Circumferential	NC	CN-ISIN3-2553-1.1			160	0.719		
Class A					Pipe to Flange				
B09.011.054	2NC44-15		CN-2NC-44	NDE-600	UT	SS	4.000	Component	Depending on the examiner's qualifications, Procedure PDI-UT-2 may be used in lieu of NDE-600.
	Circumferential	NC	CN-ISIN3-2553-1.1			160	0.531		
Class A					Pipe to Elbow				
B09.011.054A	2NC44-15		CN-2NC-44	NDE-35	PT	SS	4.000		
	Circumferential	NC	CN-ISIN3-2553-1.1			160	0.531		
Class A					Pipe to Elbow				
B09.011.055	2NC44-16		CN-2NC-44	NDE-600	UT	SS	4.000	Component	Depending on the examiners qualifications, Procedure PDI-UT-2 may be used in lieu of NDE-600. If PDI-UT-2 is used, Calibration Block PDI-UT-2-C may be used.
	Circumferential	NC	CN-ISIN3-2553-1.1			160	0.531		
Class A					Elbow to Pipe				

CATEGORY B-J, Pressure Retaining Welds In Piping

Less Than NPS 4

ITEM NUMBER	ID NUMBER	SYS	ISO/DWG NUMBERS	PROC	INSP REQ	MAT/SCH	DIA/THK	CAL BLOCKS	COMMENTS
B09.011.055A	2NC44-16		CN-2NC-44	NDE-35	PT	SS	4.000		
	Circumferential	NC	CN-ISIN3-2553-1.1			160	0.531		
Class A					Elbow to Pipe				
B09.011.101	2ND66-12		CN-2ND-66	NDE-600	UT	SS	12.000	Component	Depending on the examiners qualifications, Procedure PDI-UT-2 may be used in lieu of NDE-600. If PDI-UT-2 is used, Calibration Block PDI-UT-2-C may be used.
	Circumferential	ND	CN-ISIN3-2561-1.1			140	1.125		
Class A					Pipe to Elbow				
B09.011.101A	2ND66-12		CN-2ND-66	NDE-35	PT	SS	12.000		
	Circumferential	ND	CN-ISIN3-2561-1.1			140	1.125		
Class A					Pipe to Elbow				
B09.011.102	2ND66-4		CN-2ND-66	NDE-600	UT	SS	12.000	Component	Depending on the examiners qualifications, Procedure PDI-UT-2 may be used in lieu of NDE-600. If PDI-UT-2 is used, Calibration Block PDI-UT-2-C may be used.
	Circumferential	ND	CN-ISIN3-2561-1.1			140	1.125		
Class A					Pipe to Elbow				
B09.011.102A	2ND66-4		CN-2ND-66	NDE-35	PT	SS	12.000		
	Circumferential	ND	CN-ISIN3-2561-1.1			140	1.125		
Class A					Pipe to Elbow				
B09.011.103	2ND66-5		CN-2ND-66	NDE-600	UT	SS	12.000	Component	Depending on the examiners qualifications, Procedure PDI-UT-2 may be used in lieu of NDE-600. If PDI-UT-2 is used, Calibration Block PDI-UT-2-C may be used.
	Circumferential	ND	CN-ISIN3-2561-1.1			140	1.125		
Class A					Elbow to Pipe				
B09.011.103A	2ND66-5		CN-2ND-66	NDE-35	PT	SS	12.000		
	Circumferential	ND	CN-ISIN3-2561-1.1			140	1.125		
Class A					Elbow to Pipe				
B09.011.104	2ND66-7		CN-2ND-66	NDE-600	UT	SS	12.000	Component	Depending on the examiners qualifications, Procedure PDI-UT-2 may be used in lieu of NDE-600. If PDI-UT-2 is used, Calibration Block PDI-UT-2-C may be used.
	Circumferential	ND	CN-ISIN3-2561-1.1			140	1.125		
Class A					Elbow to Pipe				
B09.011.104A	2ND66-7		CN-2ND-66	NDE-35	PT	SS	12.000		
	Circumferential	ND	CN-ISIN3-2561-1.1			140	1.125		
Class A					Elbow to Pipe				

CATEGORY B-J, Pressure Retaining Welds In Piping

Less Than NPS 4

ITEM NUMBER	ID NUMBER	SYS	ISO/DWG NUMBERS	PROC	INSP REQ	MAT/SCH	DIA/THK	CAL BLOCKS	COMMENTS
B09.011.158	2NI185-18		CN-2NI-185	NDE-600	UT	SS	6.000	Component	Depending on the examiners qualifications, Procedure PDI-UT-2 may be used in lieu of NDE-600. If PDI-UT-2 is used, Calibration Block PDI-UT-2-C may be used.
	Circumferential	NI	CN-ISIN3-2562-1.1			160	0.719		
Class A					Pipe to Elbow				
B09.011.158A	2NI185-18		CN-2NI-185	NDE-35	PT	SS	6.000		
	Circumferential	NI	CN-ISIN3-2562-1.1			160	0.719		
Class A					Pipe to Elbow				
B09.011.159	2NI185-20		CN-2NI-185	NDE-600	UT	SS	6.000	Component	Depending on the examiners qualifications, Procedure PDI-UT-2 may be used in lieu of NDE-600. If PDI-UT-2 is used, Calibration Block PDI-UT-2-C may be used.
	Circumferential	NI	CN-ISIN3-2562-1.1			160	0.719		
Class A					Pipe to Elbow				
B09.011.159A	2NI185-20		CN-2NI-185	NDE-35	PT	SS	6.000		
	Circumferential	NI	CN-ISIN3-2562-1.1			160	0.719		
Class A					Pipe to Elbow				
B09.011.160	2NI185-22		CN-2NI-185	NDE-600	UT	SS	6.000	Component	Depending on the examiners qualifications, Procedure PDI-UT-2 may be used in lieu of NDE-600. If PDI-UT-2 is used, Calibration Block PDI-UT-2-C may be used.
	Circumferential	NI	CN-ISIN3-2562-1.1			160	0.719		
Class A					Pipe to Elbow				
B09.011.160A	2NI185-22		CN-2NI-185	NDE-35	PT	SS	6.000		
	Circumferential	NI	CN-ISIN3-2562-1.1			160	0.719		
Class A					Pipe to Elbow				

Total B09.011 Items: 32

CATEGORY B-J, Pressure Retaining Welds In Piping

Branch Pipe Connection Welds

ITEM NUMBER	ID NUMBER	SYS	ISO/DWG NUMBERS	PROC	INSP REQ	MAT/SCH	DIA/THK	CAL BLOCKS	COMMENTS
B09.021.001	2NC114-12		CN-2NC-114	NDE-35	PT	SS	3.000		
	Circumferential	NC	CN-ISIN3-2553-1.1			160	0.438		
Class A					Tee to Pipe				
B09.021.002	2NC114-3		CN-2NC-114	NDE-35	PT	SS	3.000		
	Circumferential	NC	CN-ISIN3-2553-1.1			160	0.438		
Class A					Pipe to Elbow				
B09.021.003	2NC114-6		CN-2NC-114	NDE-35	PT	SS	3.000		
	Circumferential	NC	CN-ISIN3-2553-1.1			160	0.438		
Class A					Elbow to Pipe				
B09.021.004	2NC116-10		CN-2NC-116	NDE-35	PT	SS	3.000		
	Circumferential	NC	CN-ISIN3-2553-1.1			160	0.438		
Class A					Pipe to Elbow				
B09.021.005	2NC116-11		CN-2NC-116	NDE-35	PT	SS	3.000		
	Circumferential	NC	CN-ISIN3-2553-1.1			160	0.438		
Class A					Elbow to Pipe				
B09.021.006	2NC116-9		CN-2NC-116	NDE-35	PT	SS	3.000		
	Circumferential	NC	CN-ISIN3-2553-1.1			160	0.438		
Class A					Reducer to Pipe				
B09.021.011	2NC258-1		CN-2NC-258	NDE-35	PT	SS	3.000		
	Circumferential	NC	CN-ISIN3-2553-1.0				0.438		
Class A					Elbow to Pipe				
B09.021.012	2NC258-3		CN-2NC-258	NDE-35	PT	SS	3.000		
	Circumferential	NC	CN-ISIN3-2553-1.0				0.438		
Class A					Pipe to Valve 2NC298				

CATEGORY B-J, Pressure Retaining Welds In Piping

Branch Pipe Connection Welds

ITEM NUMBER	ID NUMBER	SYS	ISO/DWG NUMBERS	PROC	INSP REQ	MAT/SCH	DIA/THK	CAL BLOCKS	COMMENTS
B09.021.013	2NC258-4		CN-2NC-258	NDE-35	PT	SS	3.000		
	Circumferential	NC	CN-ISIN3-2553-1.0				0.438		
Class A					Valve 2NC298 to Pipe				
B09.021.014	2NC258-5		CN-2NC-258	NDE-35	PT	SS	3.000		
	Circumferential	NC	CN-ISIN3-2553-1.0				0.438		
Class A					Pipe to Valve 2NC299				
B09.021.103	2NV185-1		CN-2NV-185	NDE-35	PT	SS	3.000		
	Circumferential	NV	CN-ISIN3-2554-1.0			160	0.438		
Class A	Stress weld				Valve 2NV034 to Pipe				
B09.021.104	2NV185-2		CN-2NV-185	NDE-35	PT	SS	3.000		
	Circumferential	NV	CN-ISIN3-2554-1.0			160	0.438		
Class A	Stress weld				Pipe to Valve 2NV033				

Total B09.021 Items: 12

CATEGORY B-J, Pressure Retaining Welds In Piping

Socket Welds

ITEM NUMBER	ID NUMBER	SYS	ISO/DWG NUMBERS	PROC	INSP REQ	MAT/SCH	DIA/THK	CAL BLOCKS	COMMENTS
B09.032.001	2NC9-WN4		CN-2NC-9	NDE-35	PT	SS	2.000		Reactor Coolant Loop 2A Cold Leg.
	Branch	NC	CN-ISIN3-2553-1.0			160	1.355		
Class A			CNM 2201.01-104/3		Branch to Pipe				
B09.032.004	1-20-1		CN-2NC-9	NDE-35	PT	SS	2.000		Reactor Coolant Loop 2A Crossover Leg Boss Coupling For RTD Modification.
	Branch	NC	CN-ISIN3-2680-1			160	0.344		
Class A					Half Coupling to Pipe				
B09.032.051	2NI70-3		CN-2NI-70	NDE-35	PT	SS	2.000		Branch Socket Weld.
	Branch	NI	CN-ISIN3-2562-1.3			160	0.344		
Class A					Pipe to Special Weld Branch				
B09.032.052	2NI75-7		CN-2NI-75	NDE-35	PT	SS	2.000		Branch Socket Weld.
	Branch	NI	CN-ISIN3-2562-1.3			6000	0.344		
Class A					Special Weld Branch to Pipe				

Total B09.032 Items: 4

CATEGORY B-J, Pressure Retaining Welds In Piping

Pressure Vessels

ITEM NUMBER	ID NUMBER	SYS	ISO/DWG NUMBERS	PROC	INSP REQ	MAT/SCH	DIA/THK	CAL BLOCKS	COMMENTS
**** Welded Attachments ****									
B09.040.001	2NC140-1		CN-2NC-140	NDE-35	PT	SS	1.500		
	Socket	NC	CN-ISIN3-2553-1.0			160	0.281		
Class A					Reducing Insert to Pipe				
B09.040.002	2NC140-3		CN-2NC-140	NDE-35	PT	SS	1.500		
	Socket	NC	CN-ISIN3-2553-1.0			160	0.281		
Class A					Elbow to Pipe				
B09.040.003	2NC141-1		CN-2NC-141	NDE-35	PT	SS	2.000		
	Socket	NC	CN-ISIN3-2553-1.0			160	0.344		
Class A					Valve 2NI015 to Reducing Insert				
B09.040.004	2NC141-2		CN-2NC-141	NDE-35	PT	SS	1.500		
	Socket	NC	CN-ISIN3-2553-1.0			160	0.281		
Class A					Reducing Insert to Pipe				
B09.040.005	2NC141-4		CN-2NC-141	NDE-35	PT	SS	1.500		
	Socket	NC	CN-ISIN3-2553-1.0			160	0.281		
Class A					Elbow to Pipe				
B09.040.013	2NC81-33		CN-2NC-81	NDE-35	PT	SS	2.000		
	Socket	NC	CN-ISIN3-2553-1.0			160	0.344		
Class A					Pipe to Elbow				
B09.040.020	1-20-2		CN-2NC-9	NDE-35	PT	SS	2.000		
	Socket	NC	CN-ISIN3-2680-1			160	0.344		
Class A					Half Coupling to Thermowell				
B09.040.070	2NI398-13		CN-2NI-398	NDE-35	PT	SS	2.000		
	Socket	NI	CN-ISIN3-2562-1.2			160	0.344		
Class A					Tee to Pipe				

CATEGORY B-J, Pressure Retaining Welds In Piping

Pressure Vessels

ITEM NUMBER	ID NUMBER	SYS	ISO/DWG NUMBERS	PROC	INSP REQ	MAT/SCH	DIA/THK	CAL BLOCKS	COMMENTS
B09.040.071	2NI398-15		CN-2NI-398	NDE-35	PT	SS	2.000		
	Socket	NI	CN-ISIN3-2562-1.2			160	0.344		
Class A					Elbow to Pipe				
B09.040.072	2NI398-18		CN-2NI-398	NDE-35	PT	SS	2.000		
	Socket	NI	CN-ISIN3-2562-1.2			160	0.344		
Class A					Pipe to Elbow				
B09.040.073	2NI398-20		CN-2NI-398	NDE-35	PT	SS	2.000		
	Socket	NI	CN-ISIN3-2562-1.2			160	0.344		
Class A					Pipe to Elbow				
B09.040.103	2NV194-6		CN-2NV-194	NDE-35	PT	SS	2.000		
	Socket	NV	CN-ISIN3-2554-1.0			160	0.344		
Class A					Elbow to Pipe				
B09.040.104	2NV194-8		CN-2NV-194	NDE-35	PT	SS	2.000		
	Socket	NV	CN-ISIN3-2554-1.0			160	0.344		
Class A					Elbow to Pipe				
B09.040.117	2NV224-12		CN-2NV-224	NDE-35	PT	SS	2.000		
	Socket	NV	CN-ISIN3-2554-1.5			160	0.344		
Class A					Flange to Pipe				
B09.040.118	2NV224-16		CN-2NV-224	NDE-35	PT	SS	2.000		
	Socket	NV	CN-ISIN3-2554-1.5			160	0.344		
Class A					Tee to Pipe				
B09.040.119	2NV224-2		CN-2NV-224	NDE-35	PT	SS	1.500		
	Socket	NV	CN-ISIN3-2554-1.5			160	0.281		
Class A					Pipe to Reducing Insert				
B09.040.120	2NV224-20		CN-2NV-224	NDE-35	PT	SS	2.000		
	Socket	NV	CN-ISIN3-2554-1.5			160	0.344		
Class A					Valve 2NV071 to Pipe				

CATEGORY B-J, Pressure Retaining Welds In Piping

Pressure Vessels

ITEM NUMBER	ID NUMBER	SYS	ISO/DWG NUMBERS	PROC	INSP REQ	MAT/SCH	DIA/THK	CAL BLOCKS	COMMENTS
B09.040.121	2NV224-23		CN-2NV-224	NDE-35	PT	SS	2.000		
	Socket	NV	CN-ISIN3-2554-1.5			160	0.344		
Class A					Elbow to Pipe				
B09.040.122	2NV224-3		CN-2NV-224	NDE-35	PT	SS	2.000		
	Socket	NV	CN-ISIN3-2554-1.5			160	0.344		
Class A					Reducing Insert to Elbow				
B09.040.123	2NV224-7		CN-2NV-224	NDE-35	PT	SS	2.000		
	Socket	NV	CN-ISIN3-2554-1.5			160	0.344		
Class A					Pipe to Elbow				
B09.040.124	2NV313-5		CN-2NV-313	NDE-35	PT	SS	2.000		
	Socket	NV	CN-ISIN3-2554-1.0			160	0.344		
Class A					Elbow to Pipe				
B09.040.125	2NV313-7		CN-2NV-313	NDE-35	PT	SS	2.000		
	Socket	NV	CN-ISIN3-2554-1.0			160	0.344		
Class A					Elbow to Pipe				
B09.040.126	2NV313-9		CN-2NV-313	NDE-35	PT	SS	2.000		
	Socket	NV	CN-ISIN3-2554-1.0			160	0.344		
Class A					Tee to Pipe				

Total B09.040 Items: 23

Total B09 Items: 71

CATEGORY B-K, Welded Attachments For Vessels, Piping, Pumps, And Valves

Piping

ITEM NUMBER	ID NUMBER	SYS	ISO/DWG NUMBERS	PROC	INSP REQ	MAT/SCH	DIA/THK	CAL BLOCKS	COMMENTS
****** Welded Attachments ******									
B10.010.004	2PZR-W10C		CNM 2201.01-110/1	NDE-25	MT	CS	4.000		Pressurizer Seismic Lug To Shell (Welded Attachment). W-X Quadrant.
		NC	CN-ISIN3-2553-1.1				4.000		
Class A			CNM 2201.01-110/2		Seismic Lug to Shell				
B10.010.005	2PZR-W10D		CNM 2201.01-110/1	NDE-25	MT	CS	4.000		Pressurizer Seismic Lug To Shell (Welded Attachment). W-Z Quadrant.
		NC	CN-ISIN3-2553-1.1				4.000		
Class A			CNM 2201.01-110/2		Seismic Lug to Shell				

Total B10.010 Items: 2

Total B10 Items: 2

CATEGORY B-L-2, Pump Casings

Valves

ITEM NUMBER	ID NUMBER	SYS	ISO/DWG NUMBERS	PROC	INSP REQ	MAT/SCH	DIA/THK	CAL BLOCKS	COMMENTS
****** Valves, Less Than NPS 4; Valve Body Welds ******									
B12.020.001	2RCP-2A		CN-2NC-9	QAL-14	VT-3	SS	77.000		Reactor Coolant Pump 2A Casing Internal Surfaces. Only One Pump Required To Be Examined Per Interval. Inspect Only If Pump Is Disassembled For Maintenance, Repair, Or Volumetric Examination.
Class A		NC	CNM-1201.01-115				4.500		
B12.020.002	2RCP-2B		CN-2NC-11	QAL-14	VT-3	SS	77.000		Reactor Coolant Pump 2B Casing Internal Surfaces. Only One Pump Required To Be Examined Per Interval. Inspect Only If Pump Is Disassembled For Maintenance, Repair, Or Volumetric Examination.
Class A		NC	CNM-1201.01-115				4.500		
B12.020.003	2RCP-2C		CN-2NC-13	QAL-14	VT-3	SS	77.000		Reactor Coolant Pump 2C Casing Internal Surfaces. Only One Pump Required To Be Examined Per Interval. Inspect Only If Pump Is Disassembled For Maintenance, Repair, Or Volumetric Examination.
Class A		NC	CNM-1201.01-115				4.500		
B12.020.004	2RCP-2D		CN-2NC-15	QAL-14	VT-3	SS	77.000		Reactor Coolant Pump 2D Casing Internal Surfaces. Only One Pump Required To Be Examined Per Interval. Inspect Only If Pump Is Disassembled For Maintenance, Repair, Or Volumetric Examination.
Class A		NC	CNM-1201.01-115				4.500		

Total B12.020 Items: 4

CATEGORY B-M-2, Valve Body

Reactor Vessel

ITEM NUMBER	ID NUMBER	SYS	ISO/DWG NUMBERS	PROC	INSP REQ	MAT/SCH	DIA/THK	CAL BLOCKS	COMMENTS
**** Vessel Interior ****									
B12.050.001A Class A	2NC-1	NC	CN-2NC-112 CNM-1205.09-01	QAL-14	VT-3	SS 160	6.000 0.719		6" Relief Valve. Inspect One Of The Following Valves: 2NC-1, 2NC-2, Or 2NC-3. Inspect Only If Disassembled For Maintenance, Repair, Or Volumetric Examination.
B12.050.001B Class A	2NC-2	NC	CN-2NC-119 CNM-1205.09-01	QAL-14	VT-3	SS 160	6.000 0.719		6" Relief Valve. Inspect One Of The Following Valves: 2NC-1, 2NC-2, Or 2NC-3. Inspect Only If Disassembled For Maintenance, Repair, Or Volumetric Examination.
B12.050.001C Class A	2NC-3	NC	CN-2NC-163 CNM-1205.09-01	QAL-14	VT-3	SS 160	6.000 0.719		6" Relief Valve. Inspect One Of The Following Valves: 2NC-1, 2NC-2, Or 2NC-3. Inspect Only If Disassembled For Maintenance, Repair, Or Volumetric Examination.
B12.050.002A Class A	2NC-27	NC	CN-2NC-24 CNM-1205.06-41	QAL-14	VT-3	SS 160	6.000 0.719		6" Fisher Control Valve. Inspect One Of The Following Valves: 2NC-27, Or 2NC-29. Inspect Only If Disassembled For Maintenance, Repair, Or Volumetric Examination.
B12.050.002B Class A	2NC-29	NC	CN-2NC-33 CNM-1205.06-41	QAL-14	VT-3	SS 160	6.000 0.719		6" Fisher Control Valve. Inspect One Of The Following Valves: 2NC-27, Or 2NC-29. Inspect Only If Disassembled For Maintenance, Repair, Or Volumetric Examination.
B12.050.003A Class A	2ND-36B	ND	CN-2ND-66 CNM-1205.00-262	QAL-14	VT-3	SS 140	12.000 2.043		12" Borg Warner Gate Valve. Inspect One Of The Following Valves: 2ND-1B, 2ND-2A, 2ND-36B, Or 2ND-37A. Inspect Only If Disassembled For Maintenance, Repair, Or Volumetric Examination.
B12.050.003B Class A	2ND-37A	ND	CN-2ND-66 CNM-1205.00-262	QAL-14	VT-3	SS 140	12.000 2.043		12" Borg Warner Gate Valve. Inspect One Of The Following Valves: 2ND-1B, 2ND-2A, 2ND-36B, Or 2ND-37A. Inspect Only If Disassembled For Maintenance, Repair, Or Volumetric Examination.
B12.050.003C Class A	2ND-1B	ND	CN-2ND-67 CNM-1205.00-262	QAL-14	VT-3	SS 140	12.000 2.043		12" Borg Warner Gate Valve. Inspect One Of The Following Valves: 2ND-1B, 2ND-2A, 2ND-36B, Or 2ND-37A. Inspect Only If Disassembled For Maintenance, Repair, Or Volumetric Examination.

CATEGORY B-M-2, Valve Body

Reactor Vessel

Catawba 2
Inservice Inspection Plan for Interval 3 Outage 6

ITEM NUMBER	ID NUMBER	SYS	ISO/DWG NUMBERS	PROC	INSP REQ	MAT/SCH	DIA/THK	CAL BLOCKS	COMMENTS
B12.050.003D Class A	2ND-2A	ND	CN-2ND-67 CNM-1205.00-262	QAL-14	VT-3	SS 140	12.000 2.043		12" Borg Warner Gate Valve. Inspect One Of The Following Valves: 2ND-1B, 2ND-2A, 2ND-36B, Or 2ND-37A. Inspect Only If Disassembled For Maintenance, Repair, Or Volumetric Examination.
B12.050.004A Class A	2NI-126	NI	CN-2NI-379 CNM-1205.00-63	QAL-14	VT-3	SS 160	6.000 0.719		6" Westinghouse Check Valve. Inspect One Of The Following Valves: 2NI-126, 2NI-134, 2NI-157, 2NI-160, 2NI-175, 2NI-176, 2NI-180, Or 2NI-181. Inspect Only If Disassembled For Maintenance, Repair, Or Volumetric Examination.
B12.050.004B Class A	2NI-134	NI	CN-2NI-91 CNM-1205.00-63	QAL-14	VT-3	SS 160	6.000 0.719		6" Westinghouse Check Valve. Inspect One Of The Following Valves: 2NI-126, 2NI-134, 2NI-157, 2NI-160, 2NI-175, 2NI-176, 2NI-180, Or 2NI-181. Inspect Only If Disassembled For Maintenance, Repair, Or Volumetric Examination.
B12.050.004C Class A	2NI-157	NI	CN-2NI-398 CNM-1205.00-63	QAL-14	VT-3	SS 160	6.000 0.719		6" Westinghouse Check Valve. Inspect One Of The Following Valves: 2NI-126, 2NI-134, 2NI-157, 2NI-160, 2NI-175, 2NI-176, 2NI-180, Or 2NI-181. Inspect Only If Disassembled For Maintenance, Repair, Or Volumetric Examination.
B12.050.004D Class A	2NI-160	NI	CN-2NI-396 CNM-1205.00-63	QAL-14	VT-3	SS 160	6.000 0.719		6" Westinghouse Check Valve. Inspect One Of The Following Valves: 2NI-126, 2NI-134, 2NI-157, 2NI-160, 2NI-175, 2NI-176, 2NI-180, Or 2NI-181. Inspect Only If Disassembled For Maintenance, Repair, Or Volumetric Examination.
B12.050.004E Class A	2NI-175	NI	CN-2NI-70 CNM-1205.00-63	QAL-14	VT-3	SS 160	6.000 0.719		6" Westinghouse Check Valve. Inspect One Of The Following Valves: 2NI-126, 2NI-134, 2NI-157, 2NI-160, 2NI-175, 2NI-176, 2NI-180, Or 2NI-181. Inspect Only If Disassembled For Maintenance, Repair, Or Volumetric Examination.
B12.050.004F Class A	2NI-176	NI	CN-2NI-77 CNM-1205.00-63	QAL-14	VT-3	SS 160	6.000 0.719		6" Westinghouse Check Valve. Inspect One Of The Following Valves: 2NI-126, 2NI-134, 2NI-157, 2NI-160, 2NI-175, 2NI-176, 2NI-180, Or 2NI-181. Inspect Only If Disassembled For Maintenance, Repair, Or Volumetric Examination.

CATEGORY B-M-2, Valve Body

Reactor Vessel

Catawba 2
Inservice Inspection Plan for Interval 3 Outage 6

ITEM NUMBER	ID NUMBER	SYS	ISO/DWG NUMBERS	PROC	INSP REQ	MAT/SCH	DIA/THK	CAL BLOCKS	COMMENTS
B12.050.004G Class A	2NI-180	NI	CN-2NI-145 CNM-1205.00-63	QAL-14	VT-3	SS 160	6.000 0.719		6" Westinghouse Check Valve. Inspect One Of The Following Valves: 2NI-126, 2NI-134, 2NI-157, 2NI-160, 2NI-175, 2NI-176, 2NI-180, Or 2NI-181. Inspect Only If Disassembled For Maintenance, Repair, Or Volumetric Examination.
B12.050.004H Class A	2NI-181	NI	CN-2NI-75 CNM-1205.00-63	QAL-14	VT-3	SS 160	6.000 0.719		6" Westinghouse Check Valve. Inspect One Of The Following Valves: 2NI-126, 2NI-134, 2NI-157, 2NI-160, 2NI-175, 2NI-176, 2NI-180, Or 2NI-181. Inspect Only If Disassembled For Maintenance, Repair, Or Volumetric Examination.
B12.050.005A Class A	2NI-54A	NI	CN-2NI-59 CNM-1205.00-71	QAL-14	VT-3	SS 140	10.000 1.000		10" Westinghouse Gate Valve. Inspect One Of The Following Valves: 2NI-54A, 2NI-65B, 2NI-76A, Or 2NI-88B. Inspect Only If Disassembled For Maintenance, Repair, Or Volumetric Examination.
B12.050.005B Class A	2NI-65B	NI	CN-2NI-61 CNM-1205.00-71	QAL-14	VT-3	SS 140	10.000 1.000		10" Westinghouse Gate Valve. Inspect One Of The Following Valves: 2NI-54A, 2NI-65B, 2NI-76A, Or 2NI-88B. Inspect Only If Disassembled For Maintenance, Repair, Or Volumetric Examination.
B12.050.005C Class A	2NI-76A	NI	CN-2NI-63 CNM-1205.00-71	QAL-14	VT-3	SS 140	10.000 1.000		10" Westinghouse Gate Valve. Inspect One Of The Following Valves: 2NI-54A, 2NI-65B, 2NI-76A, Or 2NI-88B. Inspect Only If Disassembled For Maintenance, Repair, Or Volumetric Examination.
B12.050.005D Class A	2NI-88B	NI	CN-2NI-57 CNM-1205.00-71	QAL-14	VT-3	SS 140	10.000 1.000		10" Westinghouse Gate Valve. Inspect One Of The Following Valves: 2NI-54A, 2NI-65B, 2NI-76A, Or 2NI-88B. Inspect Only If Disassembled For Maintenance, Repair, Or Volumetric Examination.
B12.050.006A Class A	2NI-59	NI	CN-2NI-184 CNM-1205.00-62	QAL-14	VT-3	SS 140	10.000 1.000		10" Westinghouse Check Valve. Inspect One Of The Following Valves: 2NI-59, 2NI-60, 2NI-70, 2NI-71, 2NI-81, 2NI-82, 2NI-93, Or 2NI-94. Inspect Only If Disassembled For Maintenance, Repair, Or Volumetric Examination.
B12.050.006B Class A	2NI-60	NI	CN-2NI-184 CNM-1205.00-62	QAL-14	VT-3	SS 140	10.000 1.000		10" Westinghouse Check Valve. Inspect One Of The Following Valves: 2NI-59, 2NI-60, 2NI-70, 2NI-71, 2NI-81, 2NI-82, 2NI-93, Or 2NI-94. Inspect Only If Disassembled For Maintenance, Repair, Or Volumetric Examination.

CATEGORY B-M-2, Valve Body

Reactor Vessel

ITEM NUMBER	ID NUMBER	SYS	ISO/DWG NUMBERS	PROC	INSP REQ	MAT/SCH	DIA/THK	CAL BLOCKS	COMMENTS
B12.050.006C	2NI-70		CN-2NI-185	QAL-14	VT-3	SS	10.000		10" Westinghouse Check Valve. Inspect One Of The Following Valves: 2NI-59, 2NI-60, 2NI-70, 2NI-71, 2NI-81, 2NI-82, 2NI-93, Or 2NI-94. Inspect Only If Disassembled For Maintenance, Repair, Or Volumetric Examination.
		NI	CNM-1205.00-62			140	1.000		
Class A									
B12.050.006D	2NI-71		CN-2NI-185	QAL-14	VT-3	SS	10.000		10" Westinghouse Check Valve. Inspect One Of The Following Valves: 2NI-59, 2NI-60, 2NI-70, 2NI-71, 2NI-81, 2NI-82, 2NI-93, Or 2NI-94. Inspect Only If Disassembled For Maintenance, Repair, Or Volumetric Examination.
		NI	CNM-1205.00-62			140	1.000		
Class A									
B12.050.006E	2NI-81		CN-2NI-55	QAL-14	VT-3	SS	10.000		10" Westinghouse Check Valve. Inspect One Of The Following Valves: 2NI-59, 2NI-60, 2NI-70, 2NI-71, 2NI-81, 2NI-82, 2NI-93, Or 2NI-94. Inspect Only If Disassembled For Maintenance, Repair, Or Volumetric Examination.
		NI	CNM-1205.00-62			140	1.000		
Class A									
B12.050.006F	2NI-82		CN-2NI-55	QAL-14	VT-3	SS	10.000		10" Westinghouse Check Valve. Inspect One Of The Following Valves: 2NI-59, 2NI-60, 2NI-70, 2NI-71, 2NI-81, 2NI-82, 2NI-93, Or 2NI-94. Inspect Only If Disassembled For Maintenance, Repair, Or Volumetric Examination.
		NI	CNM-1205.00-62			140	1.000		
Class A									
B12.050.006G	2NI-93		CN-2NI-183	QAL-14	VT-3	SS	10.000		10" Westinghouse Check Valve. Inspect One Of The Following Valves: 2NI-59, 2NI-60, 2NI-70, 2NI-71, 2NI-81, 2NI-82, 2NI-93, Or 2NI-94. Inspect Only If Disassembled For Maintenance, Repair, Or Volumetric Examination.
		NI	CNM-1205.00-62			140	1.000		
Class A									
B12.050.006H	2NI-94		CN-2NI-183	QAL-14	VT-3	SS	10.000		10" Westinghouse Check Valve. Inspect One Of The Following Valves: 2NI-59, 2NI-60, 2NI-70, 2NI-71, 2NI-81, 2NI-82, 2NI-93, Or 2NI-94. Inspect Only If Disassembled For Maintenance, Repair, Or Volumetric Examination.
		NI	CNM-1205.00-62			140	1.000		
Class A									
B12.050.007A	2NI-125		CN-2NI-94	QAL-14	VT-3	SS	8.000		8" Westinghouse Check Valve. Inspect One Of The Following Valves: 2NI-125 Or 2N1-129. Inspect Only If Disassembled For Maintenance, Repair, Or Volumetric Examination.
		NI	CNM-1205.00-59			160	0.906		
Class A									

CATEGORY B-M-2, Valve Body

Reactor Vessel

ITEM NUMBER	ID NUMBER	SYS	ISO/DWG NUMBERS	PROC	INSP REQ	MAT/SCH	DIA/THK	CAL BLOCKS	COMMENTS
B12.050.007B	2NI-129		CN-2NI-92	QAL-14	VT-3	SS	8.000		8" Westinghouse Check Valve. Inspect One Of The Following Valves: 2NI-125 Or 2N1-129. Inspect Only If Disassembled For Maintenance, Repair, Or Volumetric Examination.
		NI	CNM-1205.00-59			160	0.906		
Class A									

Total B12.050 Items:	**31**
Total B12 Items:	**35**

CATEGORY C-A, Pressure Retaining Welds In Pressure Vessels

Tubesheet-to-Shell Weld

ITEM NUMBER	ID NUMBER	SYS	ISO/DWG NUMBERS	PROC	INSP REQ	MAT/SCH	DIA/THK	CAL BLOCKS	COMMENTS
C01.020.004	2REGHX-SH1-HD1		CN-ISIN3-2554-1.0	NDE-3630	UT	SS	10.900	50312	Regenerative Heat Exchanger (Shell 1). Shell (1) Pc.3 to Head (1) Pc.5.
	Circumferential	NV	CNM 1201.06-31				1.070		
Class B			CNM 1201.06-83		Shell to Head				
C01.020.005	2REGHX-SH1-HD2		CN-ISIN3-2554-1.0	NDE-3630	UT	SS	10.900	50312	Regenerative Heat Exchanger (Shell 1). Shell (1) Pc.2 to Head (2) Pc.5.
	Circumferential	NV	CNM 1201.06-83				1.070		
Class B			CNM 1201.06-31		Shell to Head				
C01.020.006	2REGHX-SH2-HD1		CN-ISIN3-2554-1.0	NDE-3630	UT	SS	10.900	50312	Regenerative Heat Exchanger (Shell 2). Shell (2) Pc.3 to Head (1) Pc.5.
	Circumferential	NV	CNM 1201.06-83				1.070		
Class B			CNM 1201.06-31		Shell to Head				
C01.020.007	2REGHX-SH2-HD2		CN-ISIN3-2554-1.0	NDE-3630	UT	SS	10.900	50312	Regenerative Heat Exchanger (Shell 2). Shell (2) Pc.2 to Head (2) Pc.5.
	Circumferential	NV	CNM 1201.06-83				1.070		
Class B			CNM 1201.06-31		Shell to Head				
C01.020.008	2REGHX-SH3-HD1		CN-ISIN3-2554-1.0	NDE-3630	UT	SS	10.900	50312	Regenerative Heat Exchanger (Shell 3). Shell (3) Pc.3 to Head (1) Pc.5.
	Circumferential	NV	CNM 1201.06-83				1.070		
Class B			CNM 1201.06-31		Shell to Head				
C01.020.009	2REGHX-SH3-HD2		CN-ISIN3-2554-1.0	NDE-3630	UT	SS	10.900	50312	Regenerative Heat Exchanger (Shell 3). Shell (3) Pc.2 to Head (2) Pc.5.
	Circumferential	NV	CNM 1201.06-83				1.070		
Class B			CNM 1201.06-31		Shell to Head				

Total C01.020 Items: 6

CATEGORY C-A, Pressure Retaining Welds In Pressure Vessels

Nozzles in Vessels <= 1/2 in. Nominal Thickness

ITEM NUMBER	ID NUMBER	SYS	ISO/DWG NUMBERS	PROC	INSP REQ	MAT/SCH	DIA/THK	CAL BLOCKS	COMMENTS
C01.030.002	2REGHX-SH1-TS		CN-ISIN3-2554-1.0	NDE-3630	UT	SS	10.900	50312	Regenerative Heat Exchanger (Shell 1). Shell (1) Pc.3 to Tubesheet Pc.4.
	Circumferential	NV	CNM 1201.06-31				1.070		
Class B			CNM 1201.06-83		Shell to Tubesheet				
C01.030.003	2REGHX-SH2-TS		CN-ISIN3-2554-1.0	NDE-3630	UT	SS	10.900	50312	Regenerative Heat Exchanger (Shell 2). Shell (2) Pc.3 to Tubesheet Pc.4.
	Circumferential	NV	CNM 1201.06-83				1.070		
Class B			CNM 1201.06-31		Shell to Tubesheet				
C01.030.004	2REGHX-SH3-TS		CN-ISIN3-2554-1.0	NDE-3630	UT	SS	10.900	50312	Regenerative Heat Exchanger (Shell 3). Shell (3) Pc.3 to Tubesheet Pc.4.
	Circumferential	NV	CNM 1201.06-83				1.070		
Class B			CNM 1201.06-31		Shell to Tubesheet				
C01.030.005	2REGHX-TS-SH1		CN-ISIN3-2554-1.0	NDE-3630	UT	SS	10.900	50312	Regenerative Heat Exchanger (Shell 1). Tubesheet Pc.4 to Shell (1) Pc.2.
	Circumferential	NV	CNM 1201.06-83				1.070		
Class B			CNM 1201.06-31		Tubesheet to Shell				
C01.030.006	2REGHX-TS-SH2		CN-ISIN3-2554-1.0	NDE-3630	UT	SS	10.900	50312	Regenerative Heat Exchanger (Shell 2). Tubesheet Pc.4 to Shell (2) Pc.2.
	Circumferential	NV	CNM 1201.06-83				1.070		
Class B			CNM 1201.06-31		Tubesheet to Shell				
C01.030.007	2REGHX-TS-SH3		CN-ISIN3-2554-1.0	NDE-3630	UT	SS	10.900	50312	Regenerative Heat Exchanger (Shell 3). Tubesheet Pc.4 to Shell (3) Pc.2.
	Circumferential	NV	CNM 1201.06-83				1.070		
Class B			CNM 1201.06-31		Tubesheet to Shell				

Total C01.030 Items: 6

Total C01 Items: 12

CATEGORY C-B, Pressure Retaining Nozzle Welds In Vessels

Nozzles Without Reinforcing Plate in Vessels > 1/2 in. Nom. Thickness

DUKE ENERGY CORPORATION
INSERVICE INSPECTION PLAN MANAGEMENT
Inservice Inspection Database Management System
Catawba 2
Inservice Inspection Plan for Interval 3 Outage 6

ITEM NUMBER	ID NUMBER	SYS	ISO/DWG NUMBERS	PROC	INSP REQ	MAT/SCH	DIA/THK	CAL BLOCKS	COMMENTS
**** Nozzle Inside Radius Section ****									
C02.021.001	2SGB-06A-18		CNM 2201.01-102/1	NDE-640	UT	CS	6.000	50366	Steam Generator 2B Auxiliary Feedwater Nozzle Pc.6A To Shell Pc.18. Depending upon the examiner's qualifications, Procedure PDI-UT-6 may be used in lieu of Procedure NDE-620.
	Circumferential	NC	CN-ISIN3-2591-1.1	NDE-820			3.890		
Class B			CNM 2201.01-106/1		Nozzle to Shell				
C02.021.001A	2SGB-06A-18		CNM 2201.01-102/1	NDE-25	MT	CS	6.000		Steam Generator 2B Auxiliary Feedwater Nozzle Pc.6A To Shell Pc.18.
	Circumferential	NC	CN-ISIN3-2591-1.1				3.890		
Class B			CNM 2201.01-106/1		Nozzle to Shell				
C02.021.002	2SGB-SB-11		CNM 2201.01-102/1	NDE-640	UT	CS	16.000	50366	Steam Generator 2B Feedwater Nozzle Pc.3 To Stub Barrel Pc.11.
	Circumferential	NC	CN-ISIN3-2591-1.1	NDE-820			3.310		
Class B			CNM 2201.01-106/1		Nozzle to Stub Barrel				
C02.021.002A	2SGB-SB-11		CNM 2201.01-102/1	NDE-25	MT	CS	16.000		Steam Generator 2B Feedwater Nozzle Pc.3 To Stub Barrel Pc.11.
	Circumferential	NC	CN-ISIN3-2591-1.1				3.310		
Class B			CNM 2201.01-106/1		Nozzle to Stub Barrel				
Total C02.021 Items:	**4**								
C02.022.001	2SGB-SB-11		CNM 2201.01-102/1	NDE-680	UT	CS	16.000	CB07-155	Steam Generator 2B Feedwater Nozzle Inside Radius.
	Circumferential	NC	CN-ISIN3-2591-1.1				3.310		
Class B			CNM 2201.01-106/1		Nozzle to Stub Barrel				
Total C02.022 Items:	**1**								
Total C02 Items:	**5**								

CATEGORY C-C, Welded Attachments For Vessels, Piping, Pumps, And Valves

Piping

DUKE ENERGY CORPORATION
INSERVICE INSPECTION PLAN MANAGEMENT
Inservice Inspection Database Management System
Catawba 2
Inservice Inspection Plan for Interval 3 Outage 6

ITEM NUMBER	ID NUMBER	SYS	ISO/DWG NUMBERS	PROC	INSP REQ	MAT/SCH	DIA/THK	CAL BLOCKS	COMMENTS
****** Welded Attachments ******									
C03.010.011	2NSHXA-SUP-1	NS	CNM 1201.06-0119 CN-ISIN3-2563-1.0	NDE-35	PT	SS	0.000 0.750		NS Heat Exchanger 2A Support Baseplate Pc.100, 101 and 102 to Shell Cylinder Pc.50. (0-90 Degrees)
Class B					Baseplate to Shell				
C03.010.012	2NSHXA-LUG	NS	CNM 1201.06-0123 CN-ISIN3-2563-1.0	NDE-35	PT	SS	0.000 1.500		NS Heat Exchanger 2A Seismic Lug Pc.106 to Upper Shell Pc.51C.
Class B					Lug to Shell				

Total C03.010 Items: 2

CATEGORY C-C, Welded Attachments For Vessels, Piping, Pumps, And Valves

Pumps

ITEM NUMBER	ID NUMBER	SYS	ISO/DWG NUMBERS	PROC	INSP REQ	MAT/SCH	DIA/THK	CAL BLOCKS	COMMENTS
****** Welded Attachments ******									
C03.020.012	2-R-CF-1010		CN-2491-CF008	NDE-25	MT	CS	18.000		
	Spring Hgr	CF	CN-ISIN3-2591-1.1				0.322		
Class B									
C03.020.021	2-R-FW-0011		CN-2492-FW041	NDE-35	PT	SS	24.000		
	Rigid Support	FW	CN-ISIN3-2571-1.0				0.750		
Class B									
C03.020.061	2-R-NV-0238		CN-2492-NV078	NDE-35	PT	SS	3.000		
	Rigid Restraint	NV	CN-ISIN3-2554-1.7				0.750		
Class B									
C03.020.063	2-A-NV-3812		CN-2492-NV190	NDE-35	PT	SS	3.000		
	Rigid Restraint	NV	CN-ISIN3-2554-1.1				0.531		
Class B									
C03.020.071	2-R-SM-1572		CN-2491-SM001	NDE-25	MT	CS	34.000		
	Rigid Support	SM	CN-ISIN3-2593-1.0				0.750		
Class B									
C03.020.073	2-R-SM-1019		CN-2491-SM010	NDE-35	MT	CS	34.000		
	Rigid Support	SM	CN-ISIN3-2593-1.0				1.000		
Class B									

Total C03.020 Items: 6

Total C03 Items: 8

DUKE ENERGY CORPORATION
INSERVICE INSPECTION PLAN MANAGEMENT
Inservice Inspection Database Management System
Catawba 2
Inservice Inspection Plan for Interval 3 Outage 6

CATEGORY C-F-1, Pressure Retaining Welds In Austenitic SS Or High Alloy Piping

Piping Welds > 1/5 in. Nom Wall for Piping >= NPS 2 and <= NPS 4

ITEM NUMBER	ID NUMBER	SYS	ISO/DWG NUMBERS	PROC	INSP REQ	MAT/SCH	DIA/THK	CAL BLOCKS	COMMENTS
****** Piping Welds > 1/5 in. Nom Wall For Piping >= NPS 2 And <= NPS 4 ******									
C05.011.004	2CA92-21		CN-2CA-92	PDI-UT-10	UT	SS-CS	6.000	50331	
	Circumferential	CA	CN-ISIN3-2592-1.1			80	0.432	50319	
Class B					Pipe to				
	Dissimilar				Elbow				
C05.011.004A	2CA92-21		CN-2CA-92	NDE-35	PT	SS-CS	6.000		
	Circumferential	CA	CN-ISIN3-2592-1.1			80	0.432		
Class B					Pipe to				
	Dissimilar				Elbow				
C05.011.005	2CA92-22		CN-2CA-92	NDE-600	UT	SS	6.000	Component	Depending on the examiners qualifications, Procedure PDI-UT-2 may be used in lieu of NDE-600. If PDI-UT-2 is used, Calibration Block PDI-UT-2-C may be used.
	Circumferential	CA	CN-ISIN3-2592-1.1			80	0.432		
Class B					Elbow to				
					Pipe				
C05.011.005A	2CA92-22		CN-2CA-92	NDE-35	PT	SS	6.000		
	Circumferential	CA	CN-ISIN3-2592-1.1			80	0.432		
Class B					Elbow to				
					Pipe				
C05.011.006	2CA92-23		CN-2CA-92	PDI-UT-10	UT	SS-CS	6.000	50331	
	Circumferential	CA	CN-ISIN3-2592-1.1			80	0.432	50319	
Class B					Pipe to				
	Dissimilar				Elbow				
C05.011.006A	2CA92-23		CN-2CA-92	NDE-35	PT	SS-CS	6.000		
	Circumferential	CA	CN-ISIN3-2592-1.1			80	0.432		
Class B					Pipe to				
	Dissimilar				Elbow				
C05.011.007	2CA92-24		CN-2CA-92	PDI-UT-10	UT	SS-CS	6.000	50331	
	Circumferential	CA	CN-ISIN3-2592-1.1			80	0.432	50319	
Class B					Elbow to				
	Dissimilar				6X4 Reducer				
C05.011.007A	2CA92-24		CN-2CA-92	NDE-35	PT	SS-CS	6.000		
	Circumferential	CA	CN-ISIN3-2592-1.1			80	0.432		
Class B					Elbow to				
	Dissimilar				6X4 Reducer				

CATEGORY C-F-1, Pressure Retaining Welds In Austenitic SS Or High Alloy Piping

Piping Welds > 1/5 in. Nom Wall for Piping >= NPS 2 and <= NPS 4

ITEM NUMBER	ID NUMBER	SYS	ISO/DWG NUMBERS	PROC	INSP REQ	MAT/SCH	DIA/THK	CAL BLOCKS	COMMENTS
C05.011.019	2CA73-40		CN-2CA-73	NDE-600	UT	SS	6.000	Component	Depending on the examiners qualifications, Procedure PDI-UT-2 may be used in lieu of NDE-600. If PDI-UT-2 is used, Calibration Block PDI-UT-2-C may be used.
	Circumferential	CA	CN-ISIN3-2592-1.1			80	0.432		
Class B					Pipe to Elbow				
C05.011.019A	2CA73-40		CN-2CA-73	NDE-35	PT	SS	6.000		
	Circumferential	CA	CN-ISIN3-2592-1.1			80	0.432		
Class B					Pipe to Elbow				
C05.011.020	2CA73-41		CN-2CA-73	NDE-600	UT	SS	6.000	Component	Depending on the examiners qualifications, Procedure PDI-UT-2 may be used in lieu of NDE-600. If PDI-UT-2 is used, Calibration Block PDI-UT-2-C may be used.
	Circumferential	CA	CN-ISIN3-2592-1.1			80	0.432		
Class B					Elbow to Pipe				
C05.011.020A	2CA73-41		CN-2CA-73	NDE-35	PT	SS	6.000		
	Circumferential	CA	CN-ISIN3-2592-1.1			80	0.432		
Class B					Elbow to Pipe				
C05.011.102	2FW76-6		CN-2FW-76	NDE-600	UT	SS	12.000	Component	Depending on the examiners qualifications, Procedure PDI-UT-2 may be used in lieu of NDE-600. If PDI-UT-2 is used, Calibration Block PDI-UT-2-C may be used.
	Circumferential	FW	CN-ISIN3-2571-1.0			STD	0.375		
Class B					Pipe to Valve 2FW028				
C05.011.102A	2FW76-6		CN-2FW-76	NDE-35	PT	SS	12.000		
	Circumferential	FW	CN-ISIN3-2571-1.0			STD	0.375		
Class B					Pipe to Valve 2FW028				
C05.011.103	2FW39-5		CN-2FW-39	NDE-600	UT	SS	24.000	Component	Depending on the examiners qualifications, Procedure PDI-UT-2 may be used in lieu of NDE-600. If PDI-UT-2 is used, Calibration Block PDI-UT-2-C may be used.
	Circumferential	FW	CN-ISIN3-2571-1.0			20	0.375		
Class B					Tee to Reducer				
C05.011.103A	2FW39-5		CN-2FW-39	NDE-35	PT	SS	24.000		
	Circumferential	FW	CN-ISIN3-2571-1.0			20	0.375		
Class B					Tee to Reducer				
C05.011.104	2FW39-6		CN-2FW-39	NDE-600	UT	SS	24.000	Component	Depending on the examiners qualifications, Procedure PDI-UT-2 may be used in lieu of NDE-600. If PDI-UT-2 is used, Calibration Block PDI-UT-2-C shall be used.
	Circumferential	FW	CN-ISIN3-2571-1.0			20	0.375		
Class B					Elbow to Tee				

CATEGORY C-F-1, Pressure Retaining Welds In Austenitic SS Or High Alloy Piping

Piping Welds > 1/5 in. Nom Wall for Piping >= NPS 2 and <= NPS 4

ITEM NUMBER	ID NUMBER	SYS	ISO/DWG NUMBERS	PROC	INSP REQ	MAT/SCH	DIA/THK	CAL BLOCKS	COMMENTS
C05.011.104A	2FW39-6		CN-2FW-39	NDE-35	PT	SS	24.000		
	Circumferential	FW	CN-ISIN3-2571-1.0			20	0.375		
Class B					Elbow to Tee				
C05.011.105	2FW39-7		CN-2FW-39	NDE-600	UT	SS	24.000	Component	Depending on the examiners qualifications, Procedure PDI-UT-2 may be used in lieu of NDE-600. If PDI-UT-2 is used, Calibration Block PDI-UT-2-C shall be used.
	Circumferential	FW	CN-ISIN3-2571-1.0			20	0.375		
Class B					Pipe to Elbow				
C05.011.105A	2FW39-7		CN-2FW-39	NDE-35	PT	SS	24.000		
	Circumferential	FW	CN-ISIN3-2571-1.0			20	0.375		
Class B					Pipe to Elbow				
C05.011.106	2FW39-11		CN-2FW-39	NDE-600	UT	SS	24.000	Component	Depending on the examiners qualifications, Procedure PDI-UT-2 may be used in lieu of NDE-600. If PDI-UT-2 is used, Calibration Block PDI-UT-2-C may be used.
	Circumferential	FW	CN-ISIN3-2571-1.0			20	0.375		
Class B					Tee to Pipe				
C05.011.106A	2FW39-11		CN-2FW-39	NDE-35	PT	SS	24.000		
	Circumferential	FW	CN-ISIN3-2571-1.0			20	0.375		
Class B					Tee to Pipe				
C05.011.107	2FW39-12		CN-2FW-39	NDE-600	UT	SS	24.000	Component	Depending on the examiners qualifications, Procedure PDI-UT-2 may be used in lieu of NDE-600. If PDI-UT-2 is used, Calibration Block PDI-UT-2-C shall be used.
	Circumferential	FW	CN-ISIN3-2571-1.0			20	0.375		
Class B					Tee to Elbow				
C05.011.107A	2FW39-12		CN-2FW-39	NDE-35	PT	SS	24.000		
	Circumferential	FW	CN-ISIN3-2571-1.0			20	0.375		
Class B					Tee to Elbow				
C05.011.108	2FW39-13		CN-2FW-39	NDE-600	UT	SS	24.000	Component	Depending on the examiners qualifications, Procedure PDI-UT-2 may be used in lieu of NDE-600. If PDI-UT-2 is used, Calibration Block PDI-UT-2-C shall be used.
	Circumferential	FW	CN-ISIN3-2571-1.0			20	0.375		
Class B					Reducer to Tee				
C05.011.108A	2FW39-13		CN-2FW-39	NDE-35	PT	SS	24.000		
	Circumferential	FW	CN-ISIN3-2571-1.0			20	0.375		
Class B					Reducer to Tee				

CATEGORY C-F-1, Pressure Retaining Welds In Austenitic SS Or High Alloy Piping

Piping Welds > 1/5 in. Nom Wall for Piping >= NPS 2 and <= NPS 4

ITEM NUMBER	ID NUMBER	SYS	ISO/DWG NUMBERS	PROC	INSP REQ	MAT/SCH	DIA/THK	CAL BLOCKS	COMMENTS
C05.011.109	2FW42-19		CN-2FW-42	NDE-600	UT	SS	24.000	Component	Depending on the examiners qualifications, Procedure PDI-UT-2 may be used in lieu of NDE-600. If PDI-UT-2 is used, Calibration Block PDI-UT-2-C shall be used.
	Circumferential	FW	CN-ISIN3-2571-1.0			STD	0.375		
Class B					Elbow to Pipe				
C05.011.109A	2FW42-19		CN-2FW-42	NDE-35	PT	SS	24.000		
	Circumferential	FW	CN-ISIN3-2571-1.0			STD	0.375		
Class B					Elbow to Pipe				
C05.011.110	2FW42-20		CN-2FW-42	NDE-600	UT	SS	24.000	Component	Depending on the examiners qualifications, Procedure PDI-UT-2 may be used in lieu of NDE-600. If PDI-UT-2 is used, Calibration Block PDI-UT-2-C shall be used.
	Circumferential	FW	CN-ISIN3-2571-1.0			STD	0.375		
Class B					Pipe to Elbow				
C05.011.110A	2FW42-20		CN-2FW-42	NDE-35	PT	SS	24.000		
	Circumferential	FW	CN-ISIN3-2571-1.0			STD	0.375		
Class B					Pipe to Elbow				
C05.011.178	2ND30-1		CN-2ND-30	NDE-600	UT	SS	12.000	Component	Depending on the examiners qualifications, Procedure PDI-UT-2 may be used in lieu of NDE-600. If PDI-UT-2 is used, Calibration Block PDI-UT-2-C may be used.
	Circumferential	ND	CN-ISIN3-2561-1.1			STD	0.375		
Class B					Pipe to Tee				
C05.011.178A	2ND30-1		CN-2ND-30	NDE-35	PT	SS	12.000		
	Circumferential	ND	CN-ISIN3-2561-1.1			STD	0.375		
Class B					Pipe to Tee				
C05.011.179	2ND30-2		CN-2ND-30	NDE-600	UT	SS	12.000	Component	Depending on the examiners qualifications, Procedure PDI-UT-2 may be used in lieu of NDE-600. If PDI-UT-2 is used, Calibration Block PDI-UT-2-C may be used.
	Circumferential	ND	CN-ISIN3-2561-1.1			140	1.125		
Class B					Tee to Pipe				
C05.011.179A	2ND30-2		CN-2ND-30	NDE-35	PT	SS	12.000		
	Circumferential	ND	CN-ISIN3-2561-1.1			140	1.125		
Class B					Tee to Pipe				
C05.011.181	2ND40-6		CN-2ND-40	NDE-600	UT	SS	14.000	Component	Depending on the examiners qualifications, Procedure PDI-UT-2 may be used in lieu of NDE-600. If PDI-UT-2 is used, Calibration Block PDI-UT-2-C may be used.
	Circumferential	ND	CN-ISIN3-2561-1.0			40	0.438		
Class B					Elbow to Pipe				

DUKE ENERGY CORPORATION
INSERVICE INSPECTION PLAN MANAGEMENT
Inservice Inspection Database Management System
Catawba 2
Inservice Inspection Plan for Interval 3 Outage 6

CATEGORY C-F-1, Pressure Retaining Welds In Austenitic SS Or High Alloy Piping

Piping Welds > 1/5 in. Nom Wall for Piping >= NPS 2 and <= NPS 4

ITEM NUMBER	ID NUMBER	SYS	ISO/DWG NUMBERS	PROC	INSP REQ	MAT/SCH	DIA/THK	CAL BLOCKS	COMMENTS
C05.011.181A	2ND40-6		CN-2ND-40	NDE-35	PT	SS	14.000		
	Circumferential	ND	CN-ISIN3-2561-1.0			40	0.438		
Class B					Elbow to Pipe				
C05.011.182	2ND46-3		CN-2ND-46	NDE-600	UT	SS	12.000	Component	Depending on the examiners qualifications, Procedure PDI-UT-2 may be used in lieu of NDE-600. If PDI-UT-2 is used, Calibration Block PDI-UT-2-C may be used.
	Circumferential	ND	CN-ISIN3-2561-1.0			STD	0.375		
Class B					Pipe to Elbow				
C05.011.182A	2ND46-3		CN-2ND-46	NDE-35	PT	SS	12.000		
	Circumferential	ND	CN-ISIN3-2561-1.0			STD	0.375		
Class B					Pipe to Elbow				
C05.011.184	2ND46-5		CN-2ND-46	NDE-600	UT	SS	12.000	Component	Depending on the examiners qualifications, Procedure PDI-UT-2 may be used in lieu of NDE-600. If PDI-UT-2 is used, Calibration Block PDI-UT-2-C may be used.
	Circumferential	ND	CN-ISIN3-2561-1.0			STD	0.375		
Class B					Pipe to Elbow				
C05.011.184A	2ND46-5		CN-2ND-46	NDE-35	PT	SS	12.000		
	Circumferential	ND	CN-ISIN3-2561-1.0			STD	0.375		
Class B					Pipe to Elbow				
C05.011.185	2ND46-7		CN-2ND-46	NDE-600	UT	SS	12.000	Component	Depending on the examiners qualifications, Procedure PDI-UT-2 may be used in lieu of NDE-600. If PDI-UT-2 is used, Calibration Block PDI-UT-2-C may be used.
	Circumferential	ND	CN-ISIN3-2561-1.0			STD	0.375		
Class B					Pipe to Elbow				
C05.011.185A	2ND46-7		CN-2ND-46	NDE-35	PT	SS	12.000		
	Circumferential	ND	CN-ISIN3-2561-1.0			STD	0.375		
Class B					Pipe to Elbow				

Total C05.011 Items: 42

CATEGORY C-F-1, Pressure Retaining Welds In Austenitic SS Or High Alloy Piping

Socket Welds

ITEM NUMBER	ID NUMBER	SYS	ISO/DWG NUMBERS	PROC	INSP REQ	MAT/SCH	DIA/THK	CAL BLOCKS	COMMENTS
C05.021.240 Class B	2NV34-10 Circumferential	NV	CN-2NV-34 CN-ISIN3-2554-1.2	NDE-600	UT Pipe to Elbow	SS 160	3.000 0.438	Component	Depending on the examiners qualifications, Procedure PDI-UT-2 may be used in lieu of NDE-600. If PDI-UT-2 is used, Calibration Block PDI-UT-2-C may be used.
C05.021.240A Class B	2NV34-10 Circumferential	NV	CN-2NV-34 CN-ISIN3-2554-1.2	NDE-35	PT Pipe to Elbow	SS 160	3.000 0.438		
C05.021.241 Class B	2NV34-11 Circumferential	NV	CN-2NV-34 CN-ISIN3-2554-1.2	NDE-600	UT Elbow to Tee	SS 160	3.000 0.438	Component	Depending on the examiners qualifications, Procedure PDI-UT-2 may be used in lieu of NDE-600. If PDI-UT-2 is used, Calibration Block PDI-UT-2-C may be used.
C05.021.241A Class B	2NV34-11 Circumferential	NV	CN-2NV-34 CN-ISIN3-2554-1.2	NDE-35	PT Elbow to Tee	SS 160	3.000 0.438		
C05.021.242 Class B	2NV34-18 Circumferential	NV	CN-2NV-34 CN-ISIN3-2554-1.2	NDE-600	UT Elbow to Pipe	SS 160	3.000 0.438	Component	Depending on the examiners qualifications, Procedure PDI-UT-2 may be used in lieu of NDE-600. If PDI-UT-2 is used, Calibration Block PDI-UT-2-C may be used.
C05.021.242A Class B	2NV34-18 Circumferential	NV	CN-2NV-34 CN-ISIN3-2554-1.2	NDE-35	PT Elbow to Pipe	SS 160	3.000 0.438		
C05.021.243 Class B	2NV34-19 Circumferential	NV	CN-2NV-34 CN-ISIN3-2554-1.2	NDE-600	UT Pipe to Elbow	SS 160	3.000 0.438	Component	Depending on the examiners qualifications, Procedure PDI-UT-2 may be used in lieu of NDE-600. If PDI-UT-2 is used, Calibration Block PDI-UT-2-C may be used.
C05.021.243A Class B	2NV34-19 Circumferential	NV	CN-2NV-34 CN-ISIN3-2554-1.2	NDE-35	PT Pipe to Elbow	SS 160	3.000 0.438		

CATEGORY C-F-1, Pressure Retaining Welds In Austenitic SS Or High Alloy Piping

Socket Welds

ITEM NUMBER	ID NUMBER	SYS	ISO/DWG NUMBERS	PROC	INSP REQ	MAT/SCH	DIA/THK	CAL BLOCKS	COMMENTS
C05.021.244	2NV34-8		CN-2NV-34	NDE-600	UT	SS	3.000	Component	Depending on the examiners qualifications, Procedure PDI-UT-2 may be used in lieu of NDE-600. If PDI-UT-2 is used, Calibration Block PDI-UT-2-C may be used.
	Circumferential	NV	CN-ISIN3-2554-1.2			160	0.438		
Class B					Pipe to Elbow				
C05.021.244A	2NV34-8		CN-2NV-34	NDE-35	PT	SS	3.000		
	Circumferential	NV	CN-ISIN3-2554-1.2			160	0.438		
Class B					Pipe to Elbow				
C05.021.245	2NV34-9		CN-2NV-34	NDE-600	UT	SS	3.000	Component	Depending on the examiners qualifications, Procedure PDI-UT-2 may be used in lieu of NDE-600. If PDI-UT-2 is used, Calibration Block PDI-UT-2-C may be used.
	Circumferential	NV	CN-ISIN3-2554-1.2			160	0.438		
Class B					Elbow to Pipe				
C05.021.245A	2NV34-9		CN-2NV-34	NDE-35	PT	SS	3.000		
	Circumferential	NV	CN-ISIN3-2554-1.2			160	0.438		
Class B					Elbow to Pipe				
C05.021.248	2NV37-14		CN-2NV-37	NDE-600	UT	SS	2.000	Component	Depending on the examiners qualifications, Procedure PDI-UT-2 may be used in lieu of NDE-600. If PDI-UT-2 is used, Calibration Block PDI-UT-2-C may be used.
	Circumferential	NV	CN-ISIN3-2554-1.5			160	0.344		
Class B					3X2 Reducer to Pipe				
C05.021.248A	2NV37-14		CN-2NV-37	NDE-35	PT	SS	2.000		
	Circumferential	NV	CN-ISIN3-2554-1.5			160	0.344		
Class B					3X2 Reducer to Pipe				
C05.021.249	2NV37-15		CN-2NV-37	NDE-600	UT	SS	3.000	Component	Depending on the examiners qualifications, Procedure PDI-UT-2 may be used in lieu of NDE-600. If PDI-UT-2 is used, Calibration Block PDI-UT-2-C may be used.
	Circumferential	NV	CN-ISIN3-2554-1.5			160	0.438		
Class B					Tee to 3X2 Reducer				
C05.021.249A	2NV37-15		CN-2NV-37	NDE-35	PT	SS	3.000		
	Circumferential	NV	CN-ISIN3-2554-1.5			160	0.438		
Class B					Tee to 3X2 Reducer				

Total C05.021 Items: 16

CATEGORY C-F-1, Pressure Retaining Welds In Austenitic SS Or High Alloy Piping

Pipe Branch Connections of Branch Piping >= NPS 2

ITEM NUMBER	ID NUMBER	SYS	ISO/DWG NUMBERS	PROC	INSP REQ	MAT/SCH	DIA/THK	CAL BLOCKS	COMMENTS
C05.030.026	2NI281-28		CN-2NI-281	NDE-35	PT	SS	2.000		
	Socket	NI	CN-ISIN3-2562-1.3			160	0.344		
Class B					Elbow to Pipe				
C05.030.027	2NI281-29		CN-2NI-281	NDE-35	PT	SS	2.000		
	Socket	NI	CN-ISIN3-2562-1.3			160	0.344		
Class B					Pipe to Elbow				
C05.030.028	2NI281-3		CN-2NI-281	NDE-35	PT	SS	2.000		
	Socket	NI	CN-ISIN3-2562-1.3			160	0.344		
Class B					Full Coupling to Pipe				
C05.030.029	2NI296-1		CN-2NI-296	NDE-35	PT	SS	2.000		
	Socket	NI	CN-ISIN3-2562-1.3			160	0.344		
Class B					Elbow to Pipe				
C05.030.030	2NI296-3		CN-2NI-296	NDE-35	PT	SS	2.000		
	Socket	NI	CN-ISIN3-2562-1.3			160	0.344		
Class B					Elbow to Pipe				
C05.030.031	2NI299-1		CN-2NI-299	NDE-35	PT	SS	2.000		
	Socket	NI	CN-ISIN3-2562-1.3			160	0.344		
Class B					Elbow to Pipe				
C05.030.032	2NI299-24		CN-2NI-299	NDE-35	PT	SS	2.000		
	Socket	NI	CN-ISIN3-2562-1.3			160	0.344		
Class B					Pipe to Elbow				
C05.030.033	2NI299-26		CN-2NI-299	NDE-35	PT	SS	2.000		
	Socket	NI	CN-ISIN3-2562-1.3			160	0.344		
Class B					Full Coupling to Pipe				

CATEGORY C-F-1, Pressure Retaining Welds In Austenitic SS Or High Alloy Piping

Pipe Branch Connections of Branch Piping >= NPS 2

ITEM NUMBER	ID NUMBER	SYS	ISO/DWG NUMBERS	PROC	INSP REQ	MAT/SCH	DIA/THK	CAL BLOCKS	COMMENTS
C05.030.034	2NI300-11		CN-2NI-300	NDE-35	PT	SS	2.000		
	Socket	NI	CN-ISIN3-2562-1.3			160	0.344		
Class B					Elbow to Pipe				
C05.030.035	2NI300-13		CN-2NI-300	NDE-35	PT	SS	2.000		
	Socket	NI	CN-ISIN3-2562-1.3			160	0.344		
Class B					Elbow to Pipe				
C05.030.112	2NV257-1		CN-2NV-257	NDE-35	PT	SS	2.000		
	Socket	NV	CN-ISIN3-2554-1.5			160	0.344		
Class B					Elbow to Pipe				
C05.030.113	2NV257-10		CN-2NV-257	NDE-35	PT	SS	2.000		
	Socket	NV	CN-ISIN3-2554-1.5			160	0.344		
Class B					Pipe to Full Coupling				
C05.030.114	2NV257-11		CN-2NV-257	NDE-35	PT	SS	2.000		
	Socket	NV	CN-ISIN3-2554-1.5			160	0.344		
Class B					Full Coupling to Pipe				
C05.030.115	2NV257-16		CN-2NV-257	NDE-35	PT	SS	2.000		
	Socket	NV	CN-ISIN3-2554-1.5			160	0.344		
Class B					Pipe to Full Coupling				
C05.030.116	2NV257-17		CN-2NV-257	NDE-35	PT	SS	2.000		
	Socket	NV	CN-ISIN3-2554-1.5			160	0.344		
Class B					Full Coupling to Pipe				
C05.030.117	2NV257-4		CN-2NV-257	NDE-35	PT	SS	2.000		
	Socket	NV	CN-ISIN3-2554-1.5			160	0.344		
Class B					Pipe to Elbow				
C05.030.118	2NV257-5		CN-2NV-257	NDE-35	PT	SS	2.000		
	Socket	NV	CN-ISIN3-2554-1.5			160	0.344		
Class B					Elbow to Pipe				

CATEGORY C-F-1, Pressure Retaining Welds In Austenitic SS Or High Alloy Piping

Pipe Branch Connections of Branch Piping >= NPS 2

ITEM NUMBER	ID NUMBER	SYS	ISO/DWG NUMBERS	PROC	INSP REQ	MAT/SCH	DIA/THK	CAL BLOCKS	COMMENTS
C05.030.127	2NV270-1		CN-2NV-270	NDE-35	PT	SS	2.000		
	Socket	NV	CN-ISIN3-2554-1.5			160	0.344		
Class B					Elbow to Pipe				
C05.030.128	2NV270-2		CN-2NV-270	NDE-35	PT	SS	2.000		
	Socket	NV	CN-ISIN3-2554-1.5			160	0.344		
Class B					Pipe to Elbow				
C05.030.129	2NV274-2		CN-2NV-274	NDE-35	PT	SS	2.000		
	Socket	NV	CN-ISIN3-2554-1.5			160	0.344		
Class B					Pipe to Elbow				
C05.030.130	2NV274-3		CN-2NV-274	NDE-35	PT	SS	2.000		
	Socket	NV	CN-ISIN3-2554-1.5			160	0.344		
Class B					Elbow to Pipe				
C05.030.131	2NV275-1		CN-2NV-275	NDE-35	PT	SS	2.000		
	Socket	NV	CN-ISIN3-2554-1.5			160	0.344		
Class B					Elbow to Pipe				
C05.030.132	2NV275-10		CN-2NV-275	NDE-35	PT	SS	2.000		
	Socket	NV	CN-ISIN3-2554-1.5			160	0.344		
Class B					Tee to 2X3/4 Reducing Insert				
C05.030.133	2NV275-14		CN-2NV-275	NDE-35	PT	SS	2.000		
	Socket	NV	CN-ISIN3-2554-1.5			160	0.344		
Class B					Tee to 2x3/4 Reducing Insert				
C05.030.134	2NV275-2		CN-2NV-275	NDE-35	PT	SS	2.000		
	Socket	NV	CN-ISIN3-2554-1.5			160	0.344		
Class B					Pipe to Tee				
C05.030.135	2NV275-5		CN-2NV-275	NDE-35	PT	SS	2.000		
	Socket	NV	CN-ISIN3-2554-1.5			160	0.344		
Class B					Pipe to Tee				

DUKE ENERGY CORPORATION
INSERVICE INSPECTION PLAN MANAGEMENT
Inservice Inspection Database Management System
Catawba 2
Inservice Inspection Plan for Interval 3 Outage 6

CATEGORY C-F-1, Pressure Retaining Welds In Austenitic SS Or High Alloy Piping

Pipe Branch Connections of Branch Piping >= NPS 2

ITEM NUMBER	ID NUMBER	SYS	ISO/DWG NUMBERS	PROC	INSP REQ	MAT/SCH	DIA/THK	CAL BLOCKS	COMMENTS
C05.030.136	2NV275-8		CN-2NV-275	NDE-35	PT	SS	2.000		
	Socket	NV	CN-ISIN3-2554-1.5			160	0.344		
Class B					Tee to Pipe				
C05.030.137	2NV310-13		CN-2NV-310	NDE-35	PT	SS	2.000		
	Socket	NV	CN-ISIN3-2554-1.5			160	0.344		
Class B					Elbow to Pipe				
C05.030.138	2NV310-14		CN-2NV-310	NDE-35	PT	SS	2.000		
	Socket	NV	CN-ISIN3-2554-1.5			160	0.344		
Class B					Pipe to 90 Degree Elbow				
C05.030.139	2NV310-18		CN-2NV-310	NDE-35	PT	SS	2.000		
	Socket	NV	CN-ISIN3-2554-1.5			160	0.344		
Class B					Pipe to Elbow				
C05.030.140	2NV310-2		CN-2NV-310	NDE-35	PT	SS	2.000		
	Socket	NV	CN-ISIN3-2554-1.5			160	0.344		
Class B					Pipe to Elbow				

Total C05.030 Items: 31

CATEGORY C-F-1, Pressure Retaining Welds In Austenitic SS Or High Alloy Piping

Piping Welds >= 3/8 in. Nominal Wall Thickness for Piping > NPS 4

ITEM NUMBER	ID NUMBER	SYS	ISO/DWG NUMBERS	PROC	INSP REQ	MAT/SCH	DIA/THK	CAL BLOCKS	COMMENTS
C05.041.001	2CA153-59		CN-2CA-153	NDE-35	PT	SS-CS	2.000		
	Circumferential	CA	CN-ISIN3-2592-1.1			80	0.218		
Class B					Pipe to Half Coupling				
C05.041.021	2FW42-9		CN-2FW-42	NDE-35	PT	SS	8.000		
	Branch	FW	CN-ISIN3-2571-1.0			20	0.250		
Class B					Sweepolet to Pipe				

Total C05.041 Items: 2

CATEGORY C-F-2, Pressure Retaining Welds In Carbon Or Low Alloy Steel Piping

Piping Welds > 1/5 in. Nom Wall for Piping >= NPS 2 and <= NPS 4

ITEM NUMBER	ID NUMBER	SYS	ISO/DWG NUMBERS	PROC	INSP REQ	MAT/SCH	DIA/THK	CAL BLOCKS	COMMENTS
C05.051.081 Class B	2SA2-1 Circumferential	SA	CN-2SA-2 CN-ISIN3-2593-1.1	NDE-600	UT Elbow to Pipe	CS 80	6.000 0.432	Component 50331	Depending on the examiners qualifications, Procedure PDI-UT-1 may be used in lieu of NDE-600. If PDI-UT-1 is used, Calibration Block PDI-UT-1-C may be used.
C05.051.081A Class B	2SA2-1 Circumferential	SA	CN-2SA-2 CN-ISIN3-2593-1.1	NDE-25	MT Elbow to Pipe	CS 80	6.000 0.432		
C05.051.082 Class B	2SA2-2 Circumferential	SA	CN-2SA-2 CN-ISIN3-2593-1.1	NDE-600	UT Pipe to Elbow	CS 80	6.000 0.432	Component 50331	Depending on the examiners qualifications, Procedure PDI-UT-1 may be used in lieu of NDE-600. If PDI-UT-1 is used, Calibration Block PDI-UT-1-C may be used.
C05.051.082A Class B	2SA2-2 Circumferential	SA	CN-2SA-2 CN-ISIN3-2593-1.1	NDE-25	MT Pipe to Elbow	CS 80	6.000 0.432		
C05.051.083 Class B	2SA2-3 Circumferential	SA	CN-2SA-2 CN-ISIN3-2593-1.1	NDE-600	UT Elbow to Pipe	CS 80	6.000 0.432	Component 50331	Depending on the examiners qualifications, Procedure PDI-UT-1 may be used in lieu of NDE-600. If PDI-UT-1 is used, Calibration Block PDI-UT-1-C may be used.
C05.051.083A Class B	2SA2-3 Circumferential	SA	CN-2SA-2 CN-ISIN3-2593-1.1	NDE-25	MT Elbow to Pipe	CS 80	6.000 0.432		
C05.051.084 Class B	2SA6-4 Circumferential	SA	CN-2SA-6 CN-ISIN3-2593-1.1	NDE-600	UT Valve 2SA003 to Pipe	CS 80	6.000 0.432	Component 50331	Depending on the examiners qualifications, Procedure PDI-UT-1 may be used in lieu of NDE-600. If PDI-UT-1 is used, Calibration Block PDI-UT-1-C may be used.
C05.051.084A Class B	2SA6-4 Circumferential	SA	CN-2SA-6 CN-ISIN3-2593-1.1	NDE-25	MT Valve 2SA003 to Pipe	CS 80	6.000 0.432		

CATEGORY C-F-2, Pressure Retaining Welds In Carbon Or Low Alloy Steel Piping

Piping Welds > 1/5 in. Nom Wall for Piping >= NPS 2 and <= NPS 4

Catawba 2

Inservice Inspection Plan for Interval 3 Outage 6

ITEM NUMBER	ID NUMBER	SYS	ISO/DWG NUMBERS	PROC	INSP REQ	MAT/SCH	DIA/THK	CAL BLOCKS	COMMENTS
C05.051.085	2SA6-5		CN-2SA-6	NDE-600	UT	CS	6.000	Component	Depending on the examiners qualifications, Procedure PDI-UT-1 may be used in lieu of NDE-600. If PDI-UT-1 is used, Calibration Block PDI-UT-1-C may be used.
	Circumferential	SA	CN-ISIN3-2593-1.1			80	0.432	50331	
Class B					Pipe to Elbow				
C05.051.085A	2SA6-5		CN-2SA-6	NDE-25	MT	CS	6.000		
	Circumferential	SA	CN-ISIN3-2593-1.1			80	0.432		
Class B					Pipe to Elbow				
C05.051.086	2SA6-7		CN-2SA-6	NDE-600	UT	CS	6.000	Component	Depending on the examiners qualifications, Procedure PDI-UT-1 may be used in lieu of NDE-600. If PDI-UT-1 is used, Calibration Block PDI-UT-1-C may be used.
	Circumferential	SA	CN-ISIN3-2593-1.1			80	0.432	50331	
Class B					Pipe to Elbow				
C05.051.086A	2SA6-7		CN-2SA-6	NDE-25	MT	CS	6.000		
	Circumferential	SA	CN-ISIN3-2593-1.1			80	0.432		
Class B					Pipe to Elbow				
C05.051.107	2SM-7D-D		CN-2SM-46	NDE-600	UT	CS	10.000	Component	Depending on the examiners qualifications, Procedure PDI-UT-1 may be used in lieu of NDE-600. If PDI-UT-1 is used, Calibration Block PDI-UT-1-C may be used.
	Circumferential	SM	CN-ISIN3-2593-1.0				1.500		
Class B					Outlet to Transition Piece				
C05.051.107A	2SM-7D-D		CN-2SM-46	NDE-25	MT	CS	10.000		
	Circumferential	SM	CN-ISIN3-2593-1.0				1.500		
Class B					Outlet to Transition Piece				
C05.051.108	2SM-7D-F		CN-2SM-46	NDE-600	UT	CS	10.000	Component	Depending on the examiners qualifications, Procedure PDI-UT-1 may be used in lieu of NDE-600. If PDI-UT-1 is used, Calibration Block PDI-UT-1-C may be used.
	Circumferential	SM	CN-ISIN3-2593-1.0				1.500		
Class B					Outlet to Transition Piece				
C05.051.108A	2SM-7D-F		CN-2SM-46	NDE-25	MT	CS	10.000		
	Circumferential	SM	CN-ISIN3-2593-1.0				1.500		
Class B					Outlet to Transition Piece				
C05.051.109	2SM-7D-G		CN-2SM-46	NDE-600	UT	CS	10.000	Component	Depending on the examiners qualifications, Procedure PDI-UT-1 may be used in lieu of NDE-600. If PDI-UT-1 is used, Calibration Block PDI-UT-1-C may be used.
	Circumferential	SM	CN-ISIN3-2593-1.0				1.500		
Class B					Outlet to Transition Piece				

CATEGORY C-F-2, Pressure Retaining Welds In Carbon Or Low Alloy Steel Piping

Piping Welds > 1/5 in. Nom Wall for Piping >= NPS 2 and <= NPS 4

ITEM NUMBER	ID NUMBER	SYS	ISO/DWG NUMBERS	PROC	INSP REQ	MAT/SCH	DIA/THK	CAL BLOCKS	COMMENTS
C05.051.109A	2SM-7D-G		CN-2SM-46	NDE-25	MT	CS	10.000		
	Circumferential	SM	CN-ISIN3-2593-1.0				1.500		
Class B					Outlet to Transition Piece				

Total C05.051 Items: 18

CATEGORY C-F-2, Pressure Retaining Welds In Carbon Or Low Alloy Steel Piping

Pipe Branch Connections of Branch Piping >= NPS 2

ITEM NUMBER	ID NUMBER	SYS	ISO/DWG NUMBERS	PROC	INSP REQ	MAT/SCH	DIA/THK	CAL BLOCKS	COMMENTS
C05.070.001	2CA153-32		CN-2CA-153	NDE-25	MT	CS	2.000		
	Circumferential	CA	CN-ISIN3-2592-1.1			80	0.218		
Class B					Pipe to Valve BW001				
C05.070.002	2CA153-38		CN-2CA-153	NDE-25	MT	CS	2.000		
	Circumferential	CA	CN-ISIN3-2592-1.1			80	0.218		
Class B					Elbow to Pipe				
C05.070.003	2CA153-58		CN-2CA-153	NDE-25	MT	CS	2.000		
	Circumferential	CA	CN-ISIN3-2592-1.1			80	0.218		
Class B					Half Coupling to Pipe				
C05.070.008	2CA53-52		CN-2CA-53	NDE-25	MT	CS	2.000		
	Circumferential	CA	CN-ISIN3-2592-1.1			80	0.218		
Class B					Full Coupling to Pipe				

Total C05.070 Items: 4

CATEGORY C-F-2, Pressure Retaining Welds In Carbon Or Low Alloy Steel Piping

Pumps

ITEM NUMBER	ID NUMBER	SYS	ISO/DWG NUMBERS	PROC	INSP REQ	MAT/SCH	DIA/THK	CAL BLOCKS	COMMENTS
****** Pump Casing Welds ******									
C05.081.001	2CA111-21		CN-2CA-111	NDE-25	MT	CS	2.000		
	Circumferential	CA	CN-ISIN3-2592-1.1			80	0.218		
Class B					Pipe to Half Coupling				

Total C05.081 Items: 1

Total C05 Items: 114

CATEGORY C-G, Pressure Retaining Welds In Pumps And Valves

Pressure Vessels

ITEM NUMBER	ID NUMBER	SYS	ISO/DWG NUMBERS	PROC	INSP REQ	MAT/SCH	DIA/THK	CAL BLOCKS	COMMENTS
****** Welded Attachments ******									
C06.020.007	2NI-118A		CNM 1205.00-113	NDE-35	PT	SS	4.000		Valve Body Weld - Valve Numbers in Valve Group 2NI-118A, 2NI-150B.
	Circumferential	NI	CN-ISIN3-2562-1.2				0.534		
Class B					Valve Body to Bonnet				
C06.020.015	2NV-482		CNM 1205.00-166	NDE-35	PT	SS	4.000		Valve Body Weld.
	Circumferential	NV	CN-ISIN3-2554-1.2				0.237		
Class B					Valve Body to Bonnet				
C06.020.016	2NV-813		CNM 1205.00-152	NDE-35	PT	SS	8.000		Valve Body Weld.
	Circumferential	NV	CN-ISIN3-2554-1.7				0.477		
Class B					Valve Body to Bonnet				

Total C06.020 Items: 3

Total C06 Items: 3

CATEGORY D-A, Welded Attachments For Vessels, Piping, Pumps, And Valves

Pumps

ITEM NUMBER	ID NUMBER	SYS	ISO/DWG NUMBERS	PROC	INSP REQ	MAT/SCH	DIA/THK	CAL BLOCKS	COMMENTS
****** Welded Attachments ******									
D01.020.031	2-R-SA-0008		CN-2492-SA001	QAL-13	VT-1	NA	6.000		Inspect with F01.030.191.
	Rigid Support	SA	CN-ISIN3-2593-1.1				0.750		
Class C									

Total D01.020 Items: 1

Total D01 Items: 1

CATEGORY F-A, Supports

Class 1 Piping Supports

ITEM NUMBER	ID NUMBER	SYS	ISO/DWG NUMBERS	PROC	INSP REQ	MAT/SCH	DIA/THK	CAL BLOCKS	COMMENTS
****** Category A, One-Directional ******									
F01.010.031	2-R-ND-1011		CN-2491-ND003	QAL-14	VT-3	NA	12.000		
	Rigid Support	ND	CN-ISIN3-2561-1.0				0.000		
Class A									
F01.010.032	2-R-ND-1012		CN-2491-ND003	QAL-14	VT-3	NA	12.000		
	Rigid Support	ND	CN-ISIN3-2561-1.0				0.000		
Class A									
F01.010.054	2-R-NI-1533		CN-2491-NI115	QAL-14	VT-3	NA	6.000		
	Rigid Support	NI	CN-ISIN3-2562-1.1				0.000		
Class A									
F01.010.055	2-R-NI-1693		CN-2491-NI115	QAL-14	VT-3	NA	10.000		
	Rigid Support	NI	CN-ISIN3-2562-1.1				0.000		
Class A									
F01.010.056	2-R-NI-1696		CN-2491-NI115	QAL-14	VT-3	NA	6.000		
	Rigid Support	NI	CN-ISIN3-2562-1.1				0.000		
Class A									
F01.010.097	2-R-NV-1056		CN-2491-NV100	QAL-14	VT-3	NA	2.000		
	Rigid Support	NV	CN-ISIN3-2554-1.5				0.000		
Class A									
F01.010.098	2-R-NV-1057		CN-2491-NV100	QAL-14	VT-3	NA	2.000		
	Rigid Support	NV	CN-ISIN3-2554-1.5				0.000		
Class A									
Total F01.010 Items:	**7**								
****** Category B, Multi-Directional ******									
F01.011.091	2-R-NV-1000		CN-2491-NV100	QAL-14	VT-3	NA	1.500		
	Rigid Restraint	NV	CN-ISIN3-2554-1.5				0.000		
Class A									

CATEGORY F-A, Supports

Class 1 Piping Supports

ITEM NUMBER	ID NUMBER	SYS	ISO/DWG NUMBERS	PROC	INSP REQ	MAT/SCH	DIA/THK	CAL BLOCKS	COMMENTS
F01.011.092	2-R-NV-1001		CN-2491-NV100	QAL-14	VT-3	NA	1.500		
	Rigid Restraint	NV	CN-ISIN3-2554-1.5				0.000		
Class A									
F01.011.093	2-R-NV-1010		CN-2491-NV100	QAL-14	VT-3	NA	2.000		
	Rigid Restraint	NV	CN-ISIN3-2554-1.5				0.000		
Class A									
F01.011.094	2-R-NV-1110		CN-2491-NV104	QAL-14	VT-3	NA	2.000		
	Rigid Restraint	NV	CN-ISIN3-2554-1.5				0.000		
Class A									

Total F01.011 Items: 4

****** Category C, Thermal Movement ******

F01.012.010	2-R-NC-1687		CN-2491-NC099	QAL-14	VT-3	NA	6.000		
	Mech Snubber	NC	CN-ISIN3-2553-1.1				0.000		
Class A									
F01.012.011	2-R-NC-1689		CN-2491-NC099	QAL-14	VT-3	NA	3.000		
	Constant Support	NC	CN-ISIN3-2553-1.1				0.000		
Class A									
F01.012.012	2-R-NC-1691		CN-2491-NC099	QAL-14	VT-3	NA	3.000		
	Mech Snubber	NC	CN-ISIN3-2553-1.1				0.000		
Class A									
F01.012.053	2-R-NI-1692		CN-2491-NI115	QAL-14	VT-3	NA	10.000		
	Mech Snubber	NI	CN-ISIN3-2562-1.1				0.000		
Class A									
F01.012.054	2-R-NI-1694		CN-2491-NI115	QAL-14	VT-3	NA	6.000		
	Mech Snubber	NI	CN-ISIN3-2562-1.1				0.000		
Class A									

CATEGORY F-A, Supports

Class 1 Piping Supports

Catawba 2
Inservice Inspection Plan for Interval 3 Outage 6

ITEM NUMBER	ID NUMBER	SYS	ISO/DWG NUMBERS	PROC	INSP REQ	MAT/SCH	DIA/THK	CAL BLOCKS	COMMENTS
F01.012.055	2-R-NI-1695		CN-2491-NI115	QAL-14	VT-3	NA	6.000		
	Spring Hgr	NI	CN-ISIN3-2562-1.1				0.000		
Class A									
F01.012.092	2-R-NV-1114		CN-2491-NV104	QAL-14	VT-3	NA	2.000		
	Mech Snubber	NV	CN-ISIN3-2554-1.5				0.000		
Class A									
F01.012.093	2-R-NV-1115		CN-2491-NV104	QAL-14	VT-3	NA	2.000		
	Mech Snubber	NV	CN-ISIN3-2554-1.5				0.000		
Class A									

Total F01.012 Items: 8

CATEGORY F-A, Supports

Class 2 Piping Supports

ITEM NUMBER	ID NUMBER	SYS	ISO/DWG NUMBERS	PROC	INSP REQ	MAT/SCH	DIA/THK	CAL BLOCKS	COMMENTS
**** Category A, One-Directional ****									
F01.020.007	2-R-CA-1029		CN-2491-CA014	QAL-14	VT-3	NA	6.000		
	Rigid Support	CA	CN-ISIN3-2592-1.1				0.000		
Class B									
F01.020.022	2-R-FW-0078		CN-2492-FW008	QAL-14	VT-3	NA	12.000		
	Rigid Support	FW	CN-ISIN3-2571-1.0				0.000		
Class B									
F01.020.023	2-R-FW-0079		CN-2492-FW008	QAL-14	VT-3	NA	12.000		
	Rigid Support	FW	CN-ISIN3-2571-1.0				0.000		
Class B									
F01.020.024	2-R-FW-0081		CN-2492-FW008	QAL-14	VT-3	NA	12.000		
	Rigid Support	FW	CN-ISIN3-2571-1.0				0.000		
Class B									
F01.020.025	2-R-FW-0082		CN-2492-FW008	QAL-14	VT-3	NA	12.000		
	Rigid Support	FW	CN-ISIN3-2571-1.0				0.000		
Class B									
F01.020.026	2-R-FW-0011		CN-2492-FW041	QAL-14	VT-3	NA	24.000		
	Rigid Support	FW	CN-ISIN3-2571-1.0				0.750		
Class B									
F01.020.071	2-R-NI-0066		CN-2492-NI013	QAL-14	VT-3	NA	8.000		
	Rigid Support	NI	CN-ISIN3-2562-1.2				0.000		
Class B									
F01.020.072	2-R-NI-0067		CN-2492-NI013	QAL-14	VT-3	NA	6.000		
	Rigid Support	NI	CN-ISIN3-2562-1.2				0.000		
Class B									

CATEGORY F-A, Supports

Class 2 Piping Supports

ITEM NUMBER	ID NUMBER	SYS	ISO/DWG NUMBERS	PROC	INSP REQ	MAT/SCH	DIA/THK	CAL BLOCKS	COMMENTS
F01.020.073	2-R-NI-0068		CN-2492-NI013	QAL-14	VT-3	NA	6.000		
	Rigid Support	NI	CN-ISIN3-2562-1.2				0.000		
Class B									
F01.020.078	2-R-NI-0075		CN-2492-NI015	QAL-14	VT-3	NA	6.000		
	Rigid Support	NI	CN-ISIN3-2562-1.2				0.500		
Class B									
F01.020.103	2-R-NS-1054		CN-2491-NS013	QAL-14	VT-3	NA	8.000		
	Rigid Support	NS	CN-ISIN3-2563-1.0				0.000		
Class B									
F01.020.104	2-R-NS-1057		CN-2491-NS013	QAL-14	VT-3	NA	8.000		
	Rigid Support	NS	CN-ISIN3-2563-1.0				0.000		
Class B									
F01.020.105	2-R-NS-1245		CN-2491-NS013	QAL-14	VT-3	NA	8.000		
	Rigid Support	NS	CN-ISIN3-2563-1.0				0.000		
Class B									
F01.020.156	2-R-NV-0026		CN-2492-NV045	QAL-14	VT-3	NA	6.000		
	Rigid Support	NV	CN-ISIN3-2554-1.7				0.000		
Class B									
F01.020.157	2-R-NV-0296		CN-2492-NV045	QAL-14	VT-3	NA	6.000		
	Rigid Support	NV	CN-ISIN3-2554-1.7				0.000		
Class B									
F01.020.158	2-R-NV-0298		CN-2492-NV045	QAL-14	VT-3	NA	6.000		
	Rigid Support	NV	CN-ISIN3-2554-1.7				0.000		
Class B									
F01.020.159	2-R-NV-0277		CN-2492-NV046	QAL-14	VT-3	NA	8.000		
	Rigid Support	NV	CN-ISIN3-2554-1.2				0.000		
Class B									

CATEGORY F-A, Supports

Class 2 Piping Supports

ITEM NUMBER	ID NUMBER	SYS	ISO/DWG NUMBERS	PROC	INSP REQ	MAT/SCH	DIA/THK	CAL BLOCKS	COMMENTS
F01.020.160	2-R-NV-0280		CN-2492-NV046	QAL-14	VT-3	NA	8.000		
	Rigid Support	NV	CN-ISIN3-2554-1.2				0.000		
Class B									
F01.020.161	2-A-NV-3788		CN-2492-NV049	QAL-14	VT-3	NA	4.000		
	Rigid Support	NV	CN-ISIN3-2554-1.1				0.000		
Class B									
F01.020.201	2-R-SM-1572		CN-2491-SM001	QAL-14	VT-3	NA	34.000		Do Not Select As Welded Attachment Examination
	Rigid Support	SM	CN-ISIN3-2593-1.0				0.750		Per Letter From M.Shutt Dated 03/03/05.
Class B									
F01.020.202	2-R-SM-1019		CN-2491-SM010	QAL-14	VT-3	NA	34.000		
	Rigid Support	SM	CN-ISIN3-2593-1.0				1.000		
Class B									
F01.020.204	2-R-SM-1028		CN-2491-SM011	QAL-14	VT-3	NA	34.000		
	Rigid Support	SM	CN-ISIN3-2593-1.0				1.000		
Class B									
F01.020.221	2-R-SV-1606		CN-2491-SV007	QAL-14	VT-3	NA	6.000		
	Rigid Support	SV	CN-ISIN3-2593-1.0				0.000		
Class B									
F01.020.222	2-R-SV-1608		CN-2491-SV007	QAL-14	VT-3	NA	6.000		
	Rigid Support	SV	CN-ISIN3-2593-1.0				0.000		
Class B									

Total F01.020 Items: 24

****** Category B, Multi-Directional ******

F01.021.004	2-R-CA-1508		CN-2491-CA.00-010	QAL-14	VT-3	NA	4.000		
	Rigid Restraint	CA	CN-ISIN3-2592-1.1				0.000		
Class B									

CATEGORY F-A, Supports

Class 2 Piping Supports

ITEM NUMBER	ID NUMBER	SYS	ISO/DWG NUMBERS	PROC	INSP REQ	MAT/SCH	DIA/THK	CAL BLOCKS	COMMENTS
F01.021.022	2-R-FW-0096		CN-2492-FW008	QAL-14	VT-3	NA	8.000		
	Rigid Restraint	FW	CN-ISIN3-2571-1.0				0.000		
Class B									
F01.021.023	2-R-FW-0097		CN-2492-FW008	QAL-14	VT-3	NA	8.000		
	Rigid Restraint	FW	CN-ISIN3-2571-1.0				0.000		
Class B									
F01.021.033	2-R-ND-0251		CN-2492-ND024	QAL-14	VT-3	NA	8.000		
	Rigid Restraint	ND	CN-ISIN3-2561-1.0				0.000		
Class B									
F01.021.034	2-R-ND-0252		CN-2492-ND024	QAL-14	VT-3	NA	8.000		
	Rigid Restraint	ND	CN-ISIN3-2561-1.0				0.000		
Class B									
F01.021.063	2-R-NI-1030		CN-2491-NI030	QAL-14	VT-3	NA	2.000		
	Rigid Restraint	NI	CN-ISIN3-2562-1.3				0.000		
Class B									
F01.021.064	2-R-NI-1059		CN-2491-NI030	QAL-14	VT-3	NA	2.000		
	Rigid Restraint	NI	CN-ISIN3-2562-1.3				0.000		
Class B									
F01.021.065	2-R-NI-1060		CN-2491-NI030	QAL-14	VT-3	NA	2.000		
	Rigid Restraint	NI	CN-ISIN3-2562-1.3				0.000		
Class B									
F01.021.106	2-R-NS-0014		CN-2492-NS015	QAL-14	VT-3	NA	8.000		
	Rigid Restraint	NS	CN-ISIN3-2563-1.0				0.000		
Class B									
F01.021.107	2-R-NS-0016		CN-2492-NS015	QAL-14	VT-3	NA	10.000		
	Rigid Restraint	NS	CN-ISIN3-2563-1.0				0.000		
Class B									

Class 2 Piping Supports

Catawba 2

Inservice Inspection Plan for Interval 3 Outage 6

ITEM NUMBER	ID NUMBER	SYS	ISO/DWG NUMBERS	PROC	INSP REQ	MAT/SCH	DIA/THK	CAL BLOCKS	COMMENTS
F01.021.108	2-R-NS-0017		CN-2492-NS015	QAL-14	VT-3	NA	10.000		
	Rigid Restraint	NS	CN-ISIN3-2563-1.0				0.000		
Class B									
F01.021.109	2-R-NS-0135		CN-2492-NS015	QAL-14	VT-3	NA	8.000		
	Rigid Restraint	NS	CN-ISIN3-2563-1.0				0.000		
Class B									
F01.021.159	2-R-NV-0009		CN-2492-NV068	QAL-14	VT-3	NA	4.000		
	Rigid Restraint	NV	CN-ISIN3-2554-1.7				0.000		
Class B									
F01.021.160	2-R-NV-0183		CN-2492-NV068	QAL-14	VT-3	NA	4.000		
	Rigid Restraint	NV	CN-ISIN3-2554-1.7				0.000		
Class B									
F01.021.161	2-R-NV-0185		CN-2492-NV068	QAL-14	VT-3	NA	4.000		
	Rigid Restraint	NV	CN-ISIN3-2554-1.7				0.000		
Class B									
F01.021.167	2-A-NV-3812		CN-2492-NV190	QAL-14	VT-3	NA	3.000		
	Rigid Restraint	NV	CN-ISIN3-2554-1.1				0.531		
Class B									

Total F01.021 Items: 16

****** Category C, Thermal Movement ******

F01.022.003	2-R-CA-1626		CN-2491-CA.00-001	QAL-14	VT-3	NA	2.000		
	Spring Hgr	CA	CN-ISIN3-2592-1.1				0.000		
Class B									
F01.022.015	2-R-CF-1009		CN-2491-CF008	QAL-14	VT-3	NA	18.000		
	Mech Snubber	CF	CN-ISIN3-2591-1.1				0.000		
Class B									

CATEGORY F-A, Supports

Class 2 Piping Supports

Catawba 2

Inservice Inspection Plan for Interval 3 Outage 6

ITEM NUMBER	ID NUMBER	SYS	ISO/DWG NUMBERS	PROC	INSP REQ	MAT/SCH	DIA/THK	CAL BLOCKS	COMMENTS
F01.022.016	2-R-CF-1010		CN-2491-CF008	QAL-14	VT-3	NA	18.000		
	Spring Hgr	CF	CN-ISIN3-2591-1.1				0.322		
Class B									
F01.022.035	2-R-ND-0263		CN-2492-ND027	QAL-14	VT-3	NA	8.000		
	Mech Snubber	ND	CN-ISIN3-2561-1.0				0.000		
Class B									
F01.022.036	2-R-ND-0265		CN-2492-ND027	QAL-14	VT-3	NA	8.000		
	Mech Snubber	ND	CN-ISIN3-2561-1.0				0.000		
Class B									
F01.022.063	2-R-NI-0070		CN-2492-NI013	QAL-14	VT-3	NA	6.000		
	Spring Hgr	NI	CN-ISIN3-2562-1.2				0.000		
Class B									
F01.022.145	2-R-NV-0323		CN-2492-NV073	QAL-14	VT-3	NA	4.000		
	Mech Snubber	NV	CN-ISIN3-2554-1.7				0.000		
Class B									
F01.022.209	2-R-SM-1009		CN-2491-SM009	QAL-14	VT-3	NA	34.000		
	Mech Snubber	SM	CN-ISIN3-2593-1.0				1.000		
Class B									

Total F01.022 Items: 8

CATEGORY F-A, Supports

Class 3 Piping Supports

ITEM NUMBER	ID NUMBER	SYS	ISO/DWG NUMBERS	PROC	INSP REQ	MAT/SCH	DIA/THK	CAL BLOCKS	COMMENTS
**** Category A, One-Directional ****									
F01.030.067	2-R-KC-0080		CN-2492-KC080	QAL-14	VT-3	NA	12.000		
	Rigid Support	KC	CN-ISIN3-2573-1.2				0.000		
Class C									
F01.030.068	2-R-KC-0082		CN-2492-KC080	QAL-14	VT-3	NA	12.000		
	Rigid Support	KC	CN-ISIN3-2573-1.2				0.000		
Class C									
F01.030.069	2-R-KC-0090		CN-2492-KC080	QAL-14	VT-3	NA	14.000		
	Rigid Support	KC	CN-ISIN3-2573-1.2				0.000		
Class C									
F01.030.070	2-R-KC-0040		CN-2492-KC088	QAL-14	VT-3	NA	6.000		
	Rigid Support	KC	CN-ISIN3-2573-1.0				0.000		
Class C									
F01.030.071	2-R-KC-0318		CN-2492-KC088	QAL-14	VT-3	NA	6.000		
	Rigid Support	KC	CN-ISIN3-2573-1.0				0.000		
Class C									
F01.030.073	2-R-KC-0058		CN-2492-KC095	QAL-14	VT-3	NA	16.000		
	Rigid Support	KC	CN-ISIN3-2573-2.1				0.000		
Class C									
F01.030.074	2-R-KC-0059		CN-2492-KC095	QAL-14	VT-3	NA	16.000		
	Rigid Support	KC	CN-ISIN3-2573-2.1				0.000		
Class C									
F01.030.075	2-R-KC-0060		CN-2492-KC095	QAL-14	VT-3	NA	16.000		
	Rigid Support	KC	CN-ISIN3-2573-2.1				0.000		
Class C									

CATEGORY F-A, Supports

Class 3 Piping Supports

ITEM NUMBER	ID NUMBER	SYS	ISO/DWG NUMBERS	PROC	INSP REQ	MAT/SCH	DIA/THK	CAL BLOCKS	COMMENTS
F01.030.103	2-R-KD-0070		CN-2493-KD030	QAL-14	VT-3	NA	8.000		
	Rigid Support	KD	CN-ISIN3-2609-1.0				0.000		
Class C									
F01.030.104	2-R-KD-0071		CN-2493-KD030	QAL-14	VT-3	NA	8.000		
	Rigid Support	KD	CN-ISIN3-2609-1.0				0.000		
Class C									
F01.030.159	2-R-RN-0019		CN-2492-RN123	QAL-14	VT-3	NA	20.000		
	Rigid Support	RN	CN-ISIN3-2574-2.1				0.000		
Class C									
F01.030.160	2-R-RN-0021		CN-2492-RN123	QAL-14	VT-3	NA	20.000		
	Rigid Support	RN	CN-ISIN3-2574-2.1				0.000		
Class C									
F01.030.161	2-R-RN-0022		CN-2492-RN123	QAL-14	VT-3	NA	20.000		
	Rigid Support	RN	CN-ISIN3-2574-2.1				0.000		
Class C									
F01.030.162	2-R-RN-0031		CN-2492-RN139	QAL-14	VT-3	NA	18.000		
	Rigid Support	RN	CN-ISIN3-2574-2.0				0.000		
Class C									
F01.030.163	2-R-RN-0032		CN-2492-RN139	QAL-14	VT-3	NA	18.000		
	Rigid Support	RN	CN-ISIN3-2574-2.0				0.000		
Class C									
F01.030.191	2-R-SA-0008		CN-2492-SA001	QAL-14	VT-3	NA	6.000		Inspect with D01.020.031.
	Rigid Support	SA	CN-ISIN3-2593-1.1				0.750		
Class C									
F01.030.223	2-R-VN-0073		CN-2493-VN003	QAL-14	VT-3	NA	30.000		
	Rigid Support	VN	CN-ISIN3-2609-5.0				0.000		
Class C									

Class 3 Piping Supports

Catawba 2

Inservice Inspection Plan for Interval 3 Outage 6

ITEM NUMBER	ID NUMBER	SYS	ISO/DWG NUMBERS	PROC	INSP REQ	MAT/SCH	DIA/THK	CAL BLOCKS	COMMENTS
F01.030.224	2-R-VN-0074		CN-2493-VN003	QAL-14	VT-3	NA	30.000		
	Rigid Support	VN	CN-ISIN3-2609-5.0				0.000		
Class C									
F01.030.225	2-R-VN-0075		CN-2493-VN003	QAL-14	VT-3	NA	30.000		
	Rigid Support	VN	CN-ISIN3-2609-5.0				0.000		
Class C									

Total F01.030 Items: 19

****** Category B, Multi-Directional ******

F01.031.054	2-R-KC-0323		CN-2492-KC088	QAL-14	VT-3	NA	6.000		
	Rigid Restraint	KC	CN-ISIN3-2573-1.0				0.750		
Class C									
F01.031.055	2-R-KC-0211		CN-2492-KC098	QAL-14	VT-3	NA	16.000		
	Rigid Restraint	KC	CN-ISIN3-2573-2.1				0.000		
Class C									
F01.031.056	2-R-KC-0198		CN-2492-KC100	QAL-14	VT-3	NA	16.000		
	Rigid Restraint	KC	CN-ISIN3-2573-2.0				0.000		
Class C									
F01.031.065	2-R-KC-1583		CN-2491-KC168	QAL-14	VT-3	NA	8.000		
	Rigid Restraint	KC	CN-ISIN3-2573-1.4				1.500		
Class C									
F01.031.066	2-R-KC-1661		CN-2491-KC141	QAL-14	VT-3	NA	6.000		
	Rigid Restraint	KC	CN-ISIN3-2573-1.4				0.906		
Class C									
F01.031.191	2-R-SA-0014		CN-2492-SA001	QAL-14	VT-3	NA	6.000		
	Rigid Restraint	SA	CN-ISIN3-2593-1.1				0.000		
Class C									

Total F01.031 Items: 6

CATEGORY F-A, Supports

Class 3 Piping Supports

ITEM NUMBER	ID NUMBER	SYS	ISO/DWG NUMBERS	PROC	INSP REQ	MAT/SCH	DIA/THK	CAL BLOCKS	COMMENTS
****** Category C, Thermal Movement ******									
F01.032.103	2-R-KD-0025		CN-2493-KD042	QAL-14	VT-3	NA	8.000		
	Spring Hgr	KD	CN-ISIN3-2609-1.0				0.000		
Class C									
F01.032.191	2-R-SA-0018		CN-2492-SA001	QAL-14	VT-3	NA	6.000		
	Mech Snubber	SA	CN-ISIN3-2593-1.1				0.000		
Class C									

Total F01.032 Items: 2

CATEGORY F-A, Supports

Supports Other Than Piping Supports

ITEM NUMBER	ID NUMBER	SYS	ISO/DWG NUMBERS	PROC	INSP REQ	MAT/SCH	DIA/THK	CAL BLOCKS	COMMENTS
**** Class 1, 2, and 3 ****									
F01.040.006	2RPV-SUPPORT-A		CN-2NC-9	QAL-14	VT-3	NA	0.000		Reactor Vessel Inlet Nozzle Support at 67 Degrees Off Centerline of Reactor Building, 113 Degrees Off Centerline of Reactor Vessel (Loop A).
	Rigid Support	NC	CN-ISIN3-2553-1.0				0.000		
Class A			CN-1070-13						
F01.040.007	2RPV-SUPPORT-B		CN-2NC-11	QAL-14	VT-3	NA	0.000		Reactor Vessel Outlet Nozzle Support at 158 Degrees Off Centerline of Reactor Building, 22 Degrees Off Centerline of Reactor Vessel (Loop B).
	Rigid Support	NC	CN-ISIN3-2553-1.0				0.000		
Class A			CN-1070-13						
F01.040.008	2RPV-SUPPORT-C		CN-2NC-13	QAL-14	VT-3	NA	0.000		Reactor Vessel Inlet Nozzle Support at 247 Degrees Off Centerline of Reactor Building, 293 Degrees Off Centerline of Reactor Vessel (Loop C).
	Rigid Support	NC	CN-ISIN3-2553-1.0				0.000		
Class A			CN-1070-13						
F01.040.009	2RPV-SUPPORT-D		CN-2NC-15	QAL-14	VT-3	NA	0.000		Reactor Vessel Outlet Nozzle Support at 338 Degrees Off Centerline of Reactor Building, 202 Degrees Off Centerline of Reactor Vessel (Loop D).
	Rigid Support	NC	CN-ISIN3-2553-1.0				0.000		
Class A			CN-1070-13						
F01.040.114	2NSHXA-RESTRAINT		CNM 1201.06-0119	QAL-14	VT-3	NA	0.000		NS Heat Exchanger 2A Seismic Lug Ring Item 106 (2 Pieces).
	Rigid Support	NS	CN-ISIN3-2563-1.0				1.500		
Class B									
F01.040.115	2NSHXA-SUPPORT		CNM 1201.06-0119	QAL-14	VT-3	NA	0.000		NS Heat Exchanger 2A Bottom Supports (4 Supports).
	Rigid Support	NS	CN-ISIN3-2563-1.0				0.750		
Class B									
F01.040.209	2DGEJWCA-SUPPORT		CNM 1301.00-237	QAL-14	VT-3	NA	0.000		Diesel Generator Jacket Water Cooler 2A Support (3 Saddle Supports).
	Rigid Support	KD	CN-ISIN3-2609-1.0				0.000		
Class C									
F01.040.210	2LDCA-SUPPORT		CNM 1301.00-237	QAL-14	VT-3	NA	0.000		Diesel Generator Engine Lube Oil Cooler 2A Support (2 Saddle Supports).
	Rigid Support	LD	CN-ISIN3-2609-2.0				0.000		
Class C									

CATEGORY F-A, Supports

Supports Other Than Piping Supports

ITEM NUMBER	ID NUMBER	SYS	ISO/DWG NUMBERS	PROC	INSP REQ	MAT/SCH	DIA/THK	CAL BLOCKS	COMMENTS
F01.040.211	2LDFA-SUPPORT		CNM 1301.00-140	QAL-14	VT-3	NA	0.000		Diesel Generator Engine Lube Oil Filter 2A Support.
	Rigid Support	LD	CN-ISIN3-2609-2.0				0.000		
Class C									
F01.040.212	2LDSA1-SUPPORT		CNM 1301.00-320	QAL-14	VT-3	NA	0.000		Diesel Generator Engine Lube Oil Strainer 2A1 Support.
	Rigid Support	LD	CN-ISIN3-2609-2.0				0.000		
Class C									
F01.040.213	2LDSTA-SUPPORT		CNM 1301.00-268	QAL-14	VT-3	NA	0.000		Diesel Generator Engine Lube Oil Sump Tank 2A Support (2 Saddle Supports).
	Rigid Support	LD	CN-ISIN3-2609-2.0				0.000		
Class C									
F01.040.214	2LDPOSA-SUPPORT		CNM 1301.00-237	QAL-14	VT-3	NA	0.000		Diesel Generator Engine Prelube Oil Strainer 2A Support (4 Stiffners).
	Rigid Support	LD	CN-ISIN3-2609-2.0				0.000		
Class C									

Total F01.040 Items: 12

Total F01 Items: 106

ITEM NUMBER	ID NUMBER	SYS	ISO/DWG NUMBERS	PROC	INSP REQ	MAT/SCH	DIA/THK	CAL BLOCKS	COMMENTS
G02.001.012 Class B	2SM44-01	SM	CN-2SM-044 CN-ISIN3-2593-1.0	NDE-600	UT Penetration to Pipe	CS	34.000 1.375	Component	Depending on the examiners qualifications, Procedure PDI-UT-1 may be used in lieu of NDE-600. If PDI-UT-1 is used, Calibration Block PDI-UT-1-C may be used.
G02.001.012A Class B	2SM44-01	SM	CN-2SM-044 CN-ISIN3-2593-1.0	NDE-25	MT Penetration to Pipe	CS	34.000 1.375		
G02.001.013 Class B	2SM-4D-C	SM	CN-2SM-044 CN-ISIN3-2593-1.0	NDE-600	UT Pipe to 90 Degree Elbow	CS	34.000 1.375	Component	Grinnell Piece Mark CW-SM-4D Weld C. Depending on the examiners qualifications, Procedure PDI-UT-1 may be used in lieu of NDE-600. If PDI-UT-1 is used, Calibration Block PDI-UT-1-C may be used.
G02.001.013A Class B	2SM-4D-C	SM	CN-2SM-044 CN-ISIN3-2593-1.0	NDE-25	MT Pipe to 90 Degree Elbow	CS	34.000 1.375		Grinnell Piece Mark CW-SM-4D Weld C
G02.001.014 Class B	2SM-4D-B	SM	CN-2SM-044 CN-ISIN3-2593-1.0	NDE-600	UT 90 Degree Elbow to Pipe	CS	34.000 1.375	Component	Grinnell Piece Mark CW-SM-4D Weld B. Depending on the examiners qualifications, Procedure PDI-UT-1 may be used in lieu of NDE-600. If PDI-UT-1 is used, Calibration Block PDI-UT-1-C may be used.
G02.001.014A Class B	2SM-4D-B	SM	CN-2SM-044 CN-ISIN3-2593-1.0	NDE-25	MT 90 Degree Elbow to Pipe	CS	34.000 1.375		Grinnell Piece Mark CW-SM-4D Weld B
G02.001.015 Class B	2SM-4D-A	SM	CN-2SM-044 CN-ISIN3-2593-1.0	NDE-600	UT Pipe to 90 Degree Elbow	CS	34.000 1.375	Component	Grinnell Piece Mark CW-SM-4D Weld A. Depending on the examiners qualifications, Procedure PDI-UT-1 may be used in lieu of NDE-600. If PDI-UT-1 is used, Calibration Block PDI-UT-1-C may be used.
G02.001.016 Class B	2SM44-03	SM	CN-2SM-044 CN-ISIN3-2593-1.0	NDE-600	UT 90 Degree Elbow to Pipe	CS	34.000 1.750	Component	Depending on the examiners qualifications, Procedure PDI-UT-1 may be used in lieu of NDE-600. If PDI-UT-1 is used, Calibration Block PDI-UT-1-C may be used.

ITEM NUMBER	ID NUMBER	SYS	ISO/DWG NUMBERS	PROC	INSP REQ	MAT/SCH	DIA/THK	CAL BLOCKS	COMMENTS
G02.001.016A	2SM44-03		CN-2SM-044	NDE-25	MT	CS	34.000		
		SM	CN-ISIN3-2593-1.0				1.750		
Class B					90 Degree Elbow to Pipe				
G02.001.017	2SM46-01		CN-2SM-046	NDE-600	UT	CS	34.000	Component	Depending on the examiners qualifications, Procedure PDI-UT-1 may be used in lieu of NDE-600. If PDI-UT-1 is used, Calibration Block PDI-UT-1-C may be used.
		SM	CN-ISIN3-2593-1.0				1.750		
Class B					Pipe to 90 Degree Elbow				
G02.001.017A	2SM46-01		CN-2SM-046	NDE-25	MT	CS	34.000		
		SM	CN-ISIN3-2593-1.0				1.750		
Class B					Pipe to 90 Degree Elbow				
G02.001.018	2SM-6D-A		CN-2SM-046	NDE-600	UT	CS	34.000	Component	Grinnell Piece Mark CW-SM-6D Weld A. Depending on the examiners qualifications, Procedure PDI-UT-1 may be used in lieu of NDE-600. If PDI-UT-1 is used, Calibration Block PDI-UT-1-C may be used.
		SM	CN-ISIN3-2593-1.0				1.750		
Class B					90 Degree Elbow to Pipe				
G02.001.018A	2SM-6D-A		CN-2SM-046	NDE-25	MT	CS	34.000		Grinnell Piece Mark CW-SM-6D Weld A
		SM	CN-ISIN3-2593-1.0				1.750		
Class B					90 Degree Elbow to Pipe				
G02.001.019	2SM46-02		CN-2SM-046	NDE-600	UT	CS	34.000	Component	Depending on the examiners qualifications, Procedure PDI-UT-1 may be used in lieu of NDE-600. If PDI-UT-1 is used, Calibration Block PDI-UT-1-C may be used.
		SM	CN-ISIN3-2593-1.0				2.375		
Class B					Pipe to Pipe				
G02.001.019A	2SM46-02		CN-2SM-046	NDE-25	MT	CS	34.000		
		SM	CN-ISIN3-2593-1.0				2.375		
Class B					Pipe to Pipe				
G02.001.020	2SM-7D-A		CN-2SM-046	NDE-600	UT	CS	34.000	Component	Grinnell Piece Mark CW-SM-7D Weld A. Depending on the examiners qualifications, Procedure PDI-UT-1 may be used in lieu of NDE-600. If PDI-UT-1 is used, Calibration Block PDI-UT-1-C may be used.
		SM	CN-ISIN3-2593-1.0				2.375		
Class B					Pipe to Pipe				

CATEGORY AUG, Augmented Inspections

ITEM NUMBER	ID NUMBER	SYS	ISO/DWG NUMBERS	PROC	INSP REQ	MAT/SCH	DIA/THK	CAL BLOCKS	COMMENTS
G02.001.020A	2SM-7D-A		CN-2SM-046	NDE-25	MT	CS	34.000		Grinnell Piece Mark CW-SM-7D Weld A
		SM	CN-ISIN3-2593-1.0				2.375		
Class B					Pipe to Pipe				
G02.001.021	2SM46-07		CN-2SM-046	NDE-600	UT	CS	34.000	Component	Depending on the examiners qualifications, Procedure PDI-UT-1 may be used in lieu of NDE-600. If PDI-UT-1 is used, Calibration Block PDI-UT-1-C may be used.
		SM	CN-ISIN3-2593-1.0				2.375		
Class B					Pipe to Valve				
G02.001.021A	2SM46-07		CN-2SM-046	NDE-25	MT	CS	34.000		
		SM	CN-ISIN3-2593-1.0				2.375		
Class B					Pipe to Valve				
G02.001.022	2SM48-01		CN-2SM-048	NDE-600	UT	CS	34.000	Component	Depending on the examiners qualifications, Procedure PDI-UT-1 may be used in lieu of NDE-600. If PDI-UT-1 is used, Calibration Block PDI-UT-1-C may be used.
		SM	CN-ISIN3-2593-1.0				2.375		
Class B					Pipe to Valve				
G02.001.022A	2SM48-01		CN-2SM-048	NDE-25	MT	CS	34.000		
		SM	CN-ISIN3-2593-1.0				2.375		
Class B					Pipe to Valve				

Total G02.001 Items:	**21**
Total G02 Items:	**21**

ITEM NUMBER	ID NUMBER	SYS	ISO/DWG NUMBERS	PROC	INSP REQ	MAT/SCH	DIA/THK	CAL BLOCKS	COMMENTS
G05.001.001	RPV-HEAD-PEN			See Com	UT	CS-Inconel	0.000		RPV Head Penetration Nozzles (Nozzle Base Material) from two (2) inches above the J-groove weld to the bottom of the nozzle and an assessment by ultrasonic testing to determine if leakage has occurred into or a leak path exists in the interference fit zone, defined by the annulus between the RPV head penetration nozzle and the RPV head low alloy steel. Vendor and special equipment required. Examinations to be done within five (5) years of 2/11/2003, and thereafter at least every four (4) refueling outages or seven (7) years, whichever occurs first. The inspections will begin in EOC-15. Time between inspections may be shortened, but not lengthened. If time between inspections is shortened, next inspection will occur at frequencies stipulated above. (For responsible individual, contact J. M. Shuping and Reactor Vessel Engineering/Materials Group). Reference NRC Order EA-03-009. Inspect during EOC-15 and EOC-19 (3rd Interval).
	Circumferential	NC	CN-ISIN3-2553-1.0				0.000		
Class A			CNM 2201.01-94						

Total G05.001 Items: 1

Total G05 Items: 1

ITEM NUMBER	ID NUMBER	SYS	ISO/DWG NUMBERS	PROC	INSP REQ	MAT/SCH	DIA/THK	CAL BLOCKS	COMMENTS
G06.001.001 Class A	2PZR-W4ASE Circumferential Term end Dissimilar	NC	CNM 2201.01-110/1 CNM 2201.01-110/2	QAL-15	VT-2	SS-CS	6.000 0.960		Pressurizer Safety Nozzle Safe End X-Y Quadrant. Bare Metal Visual Examination by VT-2 qualified inspector around 100% of penetration. (For responsibile individual, contact J. M. Shuping, Alloy 600 Engineer Nuclear Technical Services). Reference NRC Bulletin 2004-01). Reference Item Number G08.001.003.
G06.001.002 Class A	2PZR-W4BSE Circumferential Term end Dissimilar	NC	CNM 2201.01-110/1 CNM 2201.01-110/2	QAL-15	VT-2 Nozzle to Safe End	SS-CS	6.000 0.960		Pressurizer Safety Nozzle To Safe End. W-X Quadrant. Bare Metal Visual Examination by VT-2 qualified inspector around 100% of penetration. (For responsibile individual, contact J. M. Shuping, Alloy 600 Engineer Nuclear Technical Services). Reference NRC Bulletin 2004-01). Reference Item Number G08.001.004.
G06.001.003 Class A	2PZR-W4CSE Circumferential Term end Dissimilar	NC	CNM 2201.01-110/1 CNM 2201.01-110/2	QAL-15	VT-2 Nozzle to Safe End	SS-CS	6.000 0.960		Pressurizer Relief Nozzle To Safe End. W-Z Quadrant. Bare Metal Visual Examination by VT-2 qualified inspector around 100% of penetration. (For responsibile individual, contact J. M. Shuping, Alloy 600 Engineer Nuclear Technical Services). Reference NRC Bulletin 2004-01) . Reference Item Number G08.001.005.
G06.001.004 Class A	2PZR-W3SE Circumferential Term end Dissimilar	NC	CNM 2201.01-110/1 CNM 2201.01-110/2	QAL-15	VT-2 Nozzle to Safe End	SS-CS	6.000 0.960		Pressurizer Safety Nozzle To Safe End. Y-Z Quadrant. Bare Metal Visual Examination by VT-2 qualified inspector around 100% of penetration. (For responsibile individual, contact J. M. Shuping, Alloy 600 Engineer Nuclear Technical Services). Reference NRC Bulletin 2004-01) . Reference Item Number G08.001.002.
G06.001.005 Class A	2PZR-W1SE Circumferential Term end Dissimilar	NC	CNM 2201.01-110/1 CNM 2201.01-110/2	QAL-15	VT-2 Nozzle to Safe End	SS-CS	14.000 1.640		Pressurizer Surge Nozzle To Safe End. Bare Metal Visual Examination by VT-2 qualified inspector around 100% of penetration. (For responsibile individual, contact J. M. Shuping, Alloy 600 Engineer Nuclear Technical Services). Reference NRC Bulletin 2004-01) .

ITEM NUMBER	ID NUMBER	SYS	ISO/DWG NUMBERS	PROC	INSP REQ	MAT/SCH	DIA/THK	CAL BLOCKS	COMMENTS
									Reference Item Number G08.001.001.
G06.001.006 Class A	2PZR-W2SE Circumferential Term end Dissimilar	NC	CNM 2201.01-110/1 CNM 2201.01-110/2	QAL-15	VT-2 Nozzle to Safe End	SS-CS	4.000 0.760		Pressurizer Spray Nozzle To Safe End. Bare Metal Visual Examination by VT-2 qualified inspector around 100% of penetration. (For responsibile individual, contact J. M. Shuping, Alloy 600 Engineer Nuclear Technical Services). Reference NRC Bulletin 2004-01). Reference Item Number G08.001.006.
Total G06.001 Items:	**6**								
G06.002.001 Class A	2PZR-MANWAY	NC	CNM 2201.01-110/1 CNM 2201.01-110/2	QAL-15	VT-2	NA	0.000 0.000		Pressurizer Manway Diaphram Seal Weld. Bare Metal Visual Examination by VT-2 qualified inspector. Examine the gap between the Pressurizer Manway Cover and Manway for evidence of diaphram plate seal weld leakage. (For responsibile individual, contact J. M. Shuping, Alloy 600 Engineer Nuclear Technical Services). Reference NRC Bulletin 2004-01)
Total G06.002 Items:	**1**								
Total G06 Items:	**7**								

ITEM NUMBER	ID NUMBER	SYS	ISO/DWG NUMBERS	PROC	INSP REQ	MAT/SCH	DIA/THK	CAL BLOCKS	COMMENTS
G07.002.001 Class A	2RPV-202-121ASE Circumferential Term end Dissimilar	NC	E 8871-171-009 CNM 2201.01-74/5 CNM 2201.01-0205	TBD	UT Nozzle to Safe End	SS-CS	29.000 2.625		RV Outlet Nozzle To Safe End At 158 Degrees (Loop A). Reactor Building Coordinate is 22 Degrees. Inspect volume and requirements per MRP-139. For responsibile individual, contact J. M. Shuping, Alloy 600 Engineer Nuclear Technical Services). Note: This weld location is also required to be inspected per ASME Section XI, Item Number B05.010.006 Outage 7 (EOC20).
G07.002.002 Class A	2RPV202-121BSE Circumferential Term end Dissimilar	NC	E 8871-171-009 CNM 2201.01-74/5 CNM 2201.01-0205	TBD	UT Nozzle to Safe End	SS-CS	29.000 2.625		RV Outlet Nozzle To Safe End At 22 Degrees (Loop B). Reactor Building Coordinate is 158 Degrees. Inspect volume and requirements per MRP-139. For responsibile individual, contact J. M. Shuping, Alloy 600 Engineer Nuclear Technical Services). Note: This weld location is also required to be inspected per ASME Section XI, Item Number B05.010.005 Outage 7 (EOC20).
G07.002.003 Class A	2RPV202-121CSE Circumferential Term end Dissimilar	NC	E 8871-171-009 CNM 2201.01-74/5 CNM 2201.01-0205	TBD	UT Nozzle to Safe End	SS-CS	29.000 2.625		RV Outlet Nozzle To Safe End At 338 Degrees (Loop C). Reactor Building Coordinate is 202 Degrees. Inspect volume and requirements per MRP-139. For responsibile individual, contact J. M. Shuping, Alloy 600 Engineer Nuclear Technical Services). Note: This weld location is also required to be inspected per ASME Section XI, Item Number B05.010.008 Outage 7 (EOC20).
G07.002.004 Class A	2RPV202-121DSE Circumferential Term end Dissimilar	NC	E 8871-171-009 CNM 2201.01-74/5 CNM 2201.01-0205	TBD	UT Nozzle to Safe End	SS-CS	29.000 2.625		RV Outlet Nozzle To Safe End At 202 Degrees (Loop D). Reactor Building Coordinate is 338 Degrees. Inspect volume and requirements per MRP-139. For responsibile individual, contact J. M. Shuping, Alloy 600 Engineer Nuclear Technical Services). Note: This weld location is also required to be inspected per ASME Section XI, Item Number B05.010.007 Outage 7 (EOC20).

Total G07.002 Items: 4

ITEM NUMBER	ID NUMBER	SYS	ISO/DWG NUMBERS	PROC	INSP REQ	MAT/SCH	DIA/THK	CAL BLOCKS	COMMENTS
G07.003.001	2RPV-201-121ASE		E 8871-171-009	TBD	UT	SS-CS	27.500		RV Inlet Nozzle To Safe End At 113 Degrees (Loop A). Reactor Building Coordinate is 67 Degrees. Inspect volume and requirements per MRP-139. UT from both sides of the weld. For responsibile individual, contact J. M. Shuping, Alloy 600 Engineer Nuclear Technical Services). Note: This weld location is also required to be inspected per ASME Section XI, Item Number B05.010.002 Outage 7 (EOC20).
	Circumferential	NC	CNM 2201.01-74/5				2.500		
Class A	Term end		CNM 2201.01-0205		Nozzle to				
	Dissimilar				Safe End				
G07.003.002	2RPV201-121BSE		E 8871-171-009	TBD	UT	SS-CS	27.500		RV Inlet Nozzle To Safe End At 67 Degrees (Loop B). Reactor Building Coordinate is 113 Degrees. Inspect volume and requirements per MRP-139. UT from both sides of the weld. For responsibile individual, contact J. M. Shuping, Alloy 600 Engineer Nuclear Technical Services). Note: This weld location is also required to be inspected per ASME Section XI, Item Number B05.010.001 Outage 7 (EOC20).
	Circumferential	NC	CNM 2201.01-74/5				2.500		
Class A	Term end		CNM 2201.01-0205		Nozzle to				
	Dissimilar				Safe End				
G07.003.003	2RPV201-121CSE		E 8871-171-009	TBD	UT	SS-CS	27.500		RV Inlet Nozzle To Safe End At 293 Degrees (Loop C). Reactor Building Coordinate is 247 Degrees. Inspect volume and requirements per MRP-139. UT from both sides of the weld. For responsibile individual, contact J. M. Shuping, Alloy 600 Engineer Nuclear Technical Services). Note: This weld location is also required to be inspected per ASME Section XI, Item Number B05.010.004 Outage 7 (EOC20).
	Circumferential	NC	CNM 2201.01-74/5				2.500		
Class A	Term end		CNM 2201.01-0205		Nozzle to				
	Dissimilar				Safe End				
G07.003.004	2RPV201-121DSE		E 8871-171-009	TBD	UT	SS-CS	27.500		RV Inlet Nozzle To Safe End At 247 Degrees (Loop D). Reactor Building Coordinate is 293 Degrees. Inspect volume and requirements per MRP-139. UT from both sides of the weld. For responsibile individual, contact J. M. Shuping, Alloy 600 Engineer Nuclear Technical Services). Note: This weld location is also required to be inspected per ASME Section XI, Item Number B05.010.003 Outage 7 (EOC20).
	Circumferential	NC	CNM 2201.01-74/5				2.500		
Class A	Term end		CNM 2201.01-0205		Nozzle to				
	Dissimilar				Safe End				

Total G07.003 Items: 4

ITEM NUMBER	ID NUMBER	SYS	ISO/DWG NUMBERS	PROC	INSP REQ	MAT/SCH	DIA/THK	CAL BLOCKS	COMMENTS
G07.004.001 Class A	2RPV-W79-101SE Circumferential Dissimilar	NC	CNM 2201.01-86 E 8871-101-001 E 8871-101-005	PDI-UT-10	UT Nozzle to Safe End	CS-Inconel	6.625 0.625		RV Closure Head Pc. 104-101 To UHI Tube Pc. 108-202 At 270 Degrees. Inspect volume and requirements per MRP-139. For responsibile individual, contact J. M. Shuping, Alloy 600 Engineer Nuclear Technical Services). Note: This weld location is also required to be inspected per ASME Section XI, Item Number B05.010.0012 Outage 2 (EOC15).
G07.004.002 Class A	2RPV-W80-101SE Circumferential Dissimilar	NC	CNM 2201.01-86 E 8871-101-001 E 8871-101-005	PDI-UT-10	UT Nozzle to Safe End	CS-Inconel	6.625 0.625		RV Closure Head Pc. 104-101 To UHI Tube Pc. 108-202 At 0 Degrees. Inspect volume and requirements per MRP-139. For responsibile individual, contact J. M. Shuping, Alloy 600 Engineer Nuclear Technical Services). Note: This weld location is also required to be inspected per ASME Section XI, Item Number B05.010.009 Outage 2 (EOC15).
G07.004.003 Class A	2RPV-W81-101SE Circumferential Dissimilar	NC	CNM 2201.01-86 E 8871-101-001 E 8871-101-005	PDI-UT-10	UT Nozzle to Safe End	CS-Inconel	6.625 0.625		RV Closure Head Pc. 104-101 To UHI Tube Pc. 108-202 At 90 Degrees. Inspect volume and requirements per MRP-139. For responsibile individual, contact J. M. Shuping, Alloy 600 Engineer Nuclear Technical Services). Note: This weld location is also required to be inspected per ASME Section XI, Item Number B05.010.0010 Outage 2 (EOC15).
G07.004.004 Class A	2RPV-W82-101SE Circumferential Dissimilar	NC	CNM 2201.01-86 E 8871-101-001 E 8871-101-005	PDI-UT-10	UT Nozzle to Safe End	CS-Inconel	6.625 0.625		RV Closure Head Pc. 104-101 To UHI Tube Pc. 108-202 At 180 Degrees. Inspect volume and requirements per MRP-139. For responsibile individual, contact J. M. Shuping, Alloy 600 Engineer Nuclear Technical Services). Note: This weld location is also required to be inspected per ASME Section XI, Item Number B05.010.0011 Outage 2 (EOC15).

ITEM NUMBER	ID NUMBER	SYS	ISO/DWG NUMBERS	PROC	INSP REQ	MAT/SCH	DIA/THK	CAL BLOCKS	COMMENTS
G07.004.005	2RPV-W79-101		CNM 2201.01-67	PDI-UT-10	UT	SS-Inconel	6.250		UHI Tube 270 Deg. PC. 108-202 to PC. 108-101.
	Circumferential	NC	E 8871-108-002				0.625		UT from both sides.
Class A					Safe End to				Inspect volume and requirements per MRP-139.
	Dissimilar				Pipe				For responsibile individual, contact J. M. Shuping, Alloy 600 Engineer Nuclear Technical Services). Note: This weld location is also required to be inspected per ASME Section XI, Item Number B09.011.000 Outage 2 (EOC15).
G07.004.006	2RPV-W80-101		CNM 2201.01-67	PDI-UT-10	UT	SS-Inconel	6.250		UHI Tube 0 Deg. PC. 108-202 to PC. 108-101. UT
	Circumferential	NC	E 8871-108-002				0.625		from both sides.
Class A					Safe End to				Inspect volume and requirements per MRP-139.
	Dissimilar				Pipe				For responsibile individual, contact J. M. Shuping, Alloy 600 Engineer Nuclear Technical Services). Note: This weld location is also required to be inspected per ASME Section XI, Item Number B09.011.000 Outage 2 (EOC15).
G07.004.007	2RPV-W81-101		CNM 2201.01-67	PDI-UT-10	UT	SS-Inconel	6.250		UHI Tube 90 Deg. PC. 108-202 to PC. 108-101.
	Circumferential	NC	E 8871-108-002				0.625		UT from both sides.
Class A					Safe End to				Inspect volume and requirements per MRP-139.
	Dissimilar				Pipe				For responsibile individual, contact J. M. Shuping, Alloy 600 Engineer Nuclear Technical Services). Note: This weld location is also required to be inspected per ASME Section XI, Item Number B09.011.000 Outage 2 (EOC15).
G07.004.008	2RPV-W82-101		CNM 2201.01-67	PDI-UT-10	UT	SS-Inconel	6.250		UHI Tube 180 Deg. PC. 108-202 to PC. 108-101.
	Circumferential	NC	E 8871-108-002				0.625		UT from both sides.
Class A					Safe End to				Inspect volume and requirements per MRP-139.
	Dissimilar				Pipe				For responsibile individual, contact J. M. Shuping, Alloy 600 Engineer Nuclear Technical Services). Note: This weld location is also required to be inspected per ASME Section XI, Item Number B09.011.000 Outage 2 (EOC15).

Total G07.004 Items: 8

Total G07 Items: 16

ITEM NUMBER	ID NUMBER	SYS	ISO/DWG NUMBERS	PROC	INSP REQ	MAT/SCH	DIA/THK	CAL BLOCKS	COMMENTS
G08.001.001 Class A	2PZR-W1SE Circumferential Term end Dissimilar	NC	CNM 2201.01-110/1 CNM 2201.01-110/2	QAL-15	VT-2 Nozzle to Safe End	SS-CS	14.000 1.640		Pressurizer Surge Nozzle To Safe End. Bare Metal Visual Examination by VT-2 qualified inspector per requirements of MRP-139. (For responsible individual, contact J. M. Shuping, Alloy 600 Engineer Nuclear Technical Services). Reference Item Number G06.001.005.
G08.001.002 Class A	2PZR-W3SE Circumferential Term end Dissimilar	NC	CNM 2201.01-110/1 CNM 2201.01-110/2	QAL-15	VT-2 Nozzle to Safe End	SS-CS	6.000 0.960		Pressurizer Safety Nozzle To Safe End. Y-Z Quadrant. Bare Metal Visual Examination by VT-2 qualified inspector per requirements of MRP-139. (For responsible individual, contact J. M. Shuping, Alloy 600 Engineer Nuclear Technical Services). Reference Item Number G06.001.004.
G08.001.003 Class A	2PZR-W4ASE Circumferential Term end Dissimilar	NC	CNM 2201.01-110/1 CNM 2201.01-110/2	QAL-15	VT-2 Nozzle to Safe End	SS-CS	6.000 0.960		Pressurizer Safety Nozzle To Safe End. X-Y Quadrant. Bare Metal Visual Examination by VT-2 qualified inspector per requirements of MRP-139. (For responsible individual, contact J. M. Shuping, Alloy 600 Engineer Nuclear Technical Services). Reference Item Number G06.001.001.
G08.001.004 Class A	2PZR-W4BSE Circumferential Term end Dissimilar	NC	CNM 2201.01-110/1 CNM 2201.01-110/2	QAL-15	VT-2 Nozzle to Safe End	SS-CS	6.000 0.960		Pressurizer Safety Nozzle To Safe End. W-X Quadrant. Bare Metal Visual Examination by VT-2 qualified inspector per requirements of MRP-139. (For responsible individual, contact J. M. Shuping, Alloy 600 Engineer Nuclear Technical Services). Reference Item Number G06.001.002.
G08.001.005 Class A	2PZR-W4CSE Circumferential Term end Dissimilar	NC	CNM 2201.01-110/1 CNM 2201.01-110/2	QAL-15	VT-2 Nozzle to Safe End	SS-CS	6.000 0.960		Pressurizer Relief Nozzle To Safe End. W-Z Quadrant. Bare Metal Visual Examination by VT-2 qualified inspector per requirements of MRP-139. (For responsible individual, contact J. M. Shuping, Alloy 600 Engineer Nuclear Technical Services). Reference Item Number G06.001.003.

ITEM NUMBER	ID NUMBER	SYS	ISO/DWG NUMBERS	PROC	INSP REQ	MAT/SCH	DIA/THK	CAL BLOCKS	COMMENTS
G08.001.006	2PZR-W2SE		CNM 2201.01-110/1	QAL-15	VT-2	SS-CS	4.000		Pressurizer Spray Nozzle To Safe End.
	Circumferential	NC	CNM 2201.01-110/2				0.760		Bare Metal Visual Examination by VT-2 qualified
Class A	Term end				Nozzle to				inspector per requirements of MRP-139. (For
	Dissimilar				Safe End				responsible individual, contact J. M. Shuping, Alloy 600 Engineer Nuclear Technical Services). Reference Item Number G06.001.006.
Total G08.001 Items:	**6**								
G08.002.001	2RPV202-121ASE		E 8871-171-009	QAL-15	VT-2	SS-CS	29.000		RV Outlet Nozzle To Safe End At 158 Degrees
	Circumferential	NC	CNM 2201.01-74/5				2.625		(Loop A). Reactor Building Coordinate is 22
Class A	Term end		CNM 2201.01-0205		Nozzle to				Degrees. To Be Done With B09.011.001.
	Dissimilar				Safe End				Bare Metal Visual Examination by VT-2 qualified inspector per requirements of MRP-139. (For responsible individual, contact J. M. Shuping, Alloy 600 Engineer Nuclear Technical Services). Note: This weld location is also required to be UT inspected per ASME Section XI, Item Number B05.010.006 Outage 7 (EOC20).
G08.002.002	2RPV-202-121BSE		E 8871-171-009	QAL-15	VT-2	SS-CS	29.000		RV Outlet Nozzle To Safe End At 22 Degrees (Loop
	Circumferential	NC	CNM 2201.01-74/5				2.625		B). Reactor Building Coordinate is 158 Degrees.
Class A	Term end		CNM 2201.01-0205		Nozzle to				To Be Done With B09.011.005.
	Dissimilar				Safe End				Bare Metal Visual Examination by VT-2 qualified inspector per requirements of MRP-139. (For responsible individual, contact J. M. Shuping, Alloy 600 Engineer Nuclear Technical Services). Note: This weld location is also required to be UT inspected per ASME Section XI, Item Number B05.010.005 Outage 7 (EOC20).
G08.002.003	2RPV-202-121CSE		E 8871-171-009	QAL-15	VT-2	SS-CS	29.000		RV Outlet Nozzle To Safe End At 338 Degrees
	Circumferential	NC	CNM 2201.01-74/5				2.625		(Loop C). Reactor Building Coordinate is 202
Class A	Term end		CNM 2201.01-0205		Nozzle to				Degrees. To Be Done With B09.011.009.
	Dissimilar				Safe End				Bare Metal Visual Examination by VT-2 qualified inspector per requirements of MRP-139. (For responsible individual, contact J. M. Shuping, Alloy 600 Engineer Nuclear Technical Services). Note: This weld location is also required to be UT inspected per ASME Section XI, Item Number B05.010.008 Outage 7 (EOC20).

ITEM NUMBER	ID NUMBER	SYS	ISO/DWG NUMBERS	PROC	INSP REQ	MAT/SCH	DIA/THK	CAL BLOCKS	COMMENTS
G08.002.004	2RPV-202-121DSE		E 8871-171-009	QAL-15	VT-2	SS-CS	29.000		RV Outlet Nozzle To Safe End At 202 Degrees (Loop D). Reactor Building Coordinate is 338 Degrees. To Be Done With B09.011.013. Bare Metal Visual Examination by VT-2 qualified inspector per requirements of MRP-139. (For responsible individual, contact J. M. Shuping, Alloy 600 Engineer Nuclear Technical Services). Note: This weld location is also required to be UT inspected per ASME Section XI, Item Number B05.010.001 Outage 7 (EOC20).
	Circumferential	NC	CNM 2201.01-74/5				2.625		
Class A	Term end		CNM 2201.01-0205		Nozzle to Safe End				
	Dissimilar								

Total G08.002 Items: 4

Total G08 Items: 10

Duke Power Company

Quality Assurance Technical Services

Inservice Inspection Plan For:

Catawba Unit 2

Interval 3

ISI Outage 7

Refueling Outage EOC 20

ISI Inspection Listing

Revision 0

CATEGORY B-A, Pressure Retaining Welds In Reactor Vessel

Shell Welds

DUKE ENERGY CORPORATION
INSERVICE INSPECTION PLAN MANAGEMENT
Inservice Inspection Database Management System
Catawba 2
Inservice Inspection Plan for Interval 3 Outage 7

ITEM NUMBER	ID NUMBER	SYS	ISO/DWG NUMBERS	PROC	INSP REQ	MAT/SCH	DIA/THK	CAL BLOCKS	COMMENTS
**** Longitudinal ****									
B01.011.001	2RPV-101-141		CNM 2201.01-0051	TBD	UT	CS	0.000	TBD	Lower Shell to Lower Head.
	Circumferential	NC	CNM 2201.01-67				5.375		
Class A			CNM 2201.01-0205		Shell to Head				
B01.011.002	2RPV-101-171		CNM 2201.01-0051	TBD	UT	CS	0.000	TBD	Lower Shell to Intermediate Shell.
	Circumferential	NC	CNM 2201.01-67				8.625		
Class A			CNM 2201.01-0205		Shell to Shell				
B01.011.003	2RPV-103-121		CNM 2201.01-0051	TBD	UT	CS	0.000	TBD	Intermediate Shell to Upper Shell (Nozzle Belt).
	Circumferential	NC	CNM 2201.01-67				8.625		
Class A			CNM 2201.01-0205		Shell to Shell				
Total B01.011 Items:	**3**								
B01.012.001	2RPV-101-122A		CNM 2201.01-0051	TBD	UT	CS	0.000	TBD	Upper Shell Longitudinal Weld at 42 Degrees.
	Longitudinal	NC	CNM 2201.01-67				10.750		
Class A			CNM 2201.01-0205		Shell to Shell				
B01.012.002	2RPV-101-122B		CNM 2201.01-0051	TBD	UT	CS	0.000	TBD	Upper Shell Longitudinal Weld At 162 Degrees.
	Longitudinal	NC	CNM 2201.01-67				10.750		
Class A			CNM 2201.01-0205		Shell to Shell				
B01.012.003	2RPV-101-122C		CNM 2201.01-0051	TBD	UT	CS	0.000	TBD	Upper Shell Longitudinal Weld At 282 Degrees.
	Longitudinal	NC	CNM 2201.01-67				10.750		
Class A			CNM 2201.01-0205		Shell to Shell				
B01.012.004	2RPV-101-124A		CNM 2201.01-0051	TBD	UT	CS	0.000	TBD	Intermediate Shell Longitudinal Weld At 0 Degrees.
	Longitudinal	NC	CNM 2201.01-67				8.625		
Class A			CNM 2201.01-0205		Shell to Shell				
B01.012.005	2RPV-101-124B		CNM 2201.01-0051	TBD	UT	CS	0.000	TBD	Intermediate Shell Longitudinal Weld At 120 Degrees.
	Longitudinal	NC	CNM 2201.01-67				8.625		
Class A			CNM 2201.01-0205		Shell to Shell				

CATEGORY B-A, Pressure Retaining Welds In Reactor Vessel

Head Welds

ITEM NUMBER	ID NUMBER	SYS	ISO/DWG NUMBERS	PROC	INSP REQ	MAT/SCH	DIA/THK	CAL BLOCKS	COMMENTS
B01.012.006	2RPV-101-124C		CNM 2201.01-0051	TBD	UT	CS	0.000	TBD	Intermediate Shell Longitudinal Weld At 240 Degrees.
	Longitudinal	NC	CNM 2201.01-67				8.625		
Class A			CNM 2201.01-0205		Shell to Shell				
B01.012.007	2RPV-101-142A		CNM 2201.01-0051	TBD	UT	CS	0.000	TBD	Lower Shell Longitudinal Weld At 60 Degrees.
	Longitudinal	NC	CNM 2201.01-67				8.625		
Class A			CNM 2201.01-0205		Shell to Shell				
B01.012.008	2RPV-101-142B		CNM 2201.01-0051	TBD	UT	CS	0.000	TBD	Lower Shell Longitudinal Weld At 180 Degrees.
	Longitudinal	NC	CNM 2201.01-67				8.625		
Class A			CNM 2201.01-0205		Shell to Shell				
B01.012.009	2RPV-101-142C		CNM 2201.01-0051	TBD	UT	CS	0.000	TBD	Lower Shell Longitudinal Weld At 300 Degrees.
	Longitudinal	NC	CNM 2201.01-67				8.625		
Class A			CNM 2201.01-0205		Shell to Shell				

Total B01.012 Items: 9

CATEGORY B-A, Pressure Retaining Welds In Reactor Vessel

Head Welds

DUKE ENERGY CORPORATION
INSERVICE INSPECTION PLAN MANAGEMENT
Inservice Inspection Database Management System
Catawba 2
Inservice Inspection Plan for Interval 3 Outage 7

ITEM NUMBER	ID NUMBER	SYS	ISO/DWG NUMBERS	PROC	INSP REQ	MAT/SCH	DIA/THK	CAL BLOCKS	COMMENTS
**** Meridional ****									
B01.021.001	2RPV-101-151		CNM 2201.01-0051	TBD	UT	CS	0.000	TBD	Lower Head Weld.
	Circumferential	NC	CNM 2201.01-67				5.375		
Class A			CNM 2201.01-0205		Head to Head				
Total B01.021 Items:	**1**								
B01.022.005	2RPV-101-154A		CNM 2201.01-0051	TBD	UT	CS	0.000	TBD	Lower Head Meridional Weld At 0 Degrees.
		NC	CNM 2201.01-0205				5.375		
Class A					Head to Head				
B01.022.006	2RPV-101-154B		CNM 2201.01-0051	TBD	UT	CS	0.000	TBD	Lower Head Meridional Weld At 90 Degrees.
		NC	CNM 2201.01-0205				5.375		
Class A					Head to Head				
B01.022.007	2RPV-101-154C		CNM 2201.01-0051	TBD	UT	CS	0.000	TBD	Lower Head Meridional Weld At 180 Degrees.
		NC	CNM 2201.01-0205				5.375		
Class A					Head to Head				
B01.022.008	2RPV-101-154D		CNM 2201.01-0051	TBD	UT	CS	0.000	TBD	Lower Head Meridional Weld At 270 Degrees.
		NC	CNM 2201.01-0205				5.375		
Class A					Head to Head				
Total B01.022 Items:	**4**								

CATEGORY B-A, Pressure Retaining Welds In Reactor Vessel

Head-to-Flange Weld

ITEM NUMBER	ID NUMBER	SYS	ISO/DWG NUMBERS	PROC	INSP REQ	MAT/SCH	DIA/THK	CAL BLOCKS	COMMENTS
B01.030.001	2RPV-101-121		CNM 2201.01-0051	TBD	UT	CS	0.000	TBD	Upper Shell (Nozzle Belt) To Flange. UT From Vessel ID.
	Circumferential	NC	CNM 2201.01-67				10.750		
Class A			CNM 2201.01-0205		Shell to Flange				

Total B01.030 Items: 1

Total B01 Items: 18

CATEGORY B-D, Full Penetration Welded Nozzels In Vessels - Inspection Program B

Reactor Vessel

ITEM NUMBER	ID NUMBER	SYS	ISO/DWG NUMBERS	PROC	INSP REQ	MAT/SCH	DIA/THK	CAL BLOCKS	COMMENTS
**** Nozzle Inside Radius Section ****									
B03.090.001 Class A	2RPV-105-121B Circumferential	NC	E 8871-121-001 CNM 2201.01-053 CNM 2201.01-0205	TBD	UT Nozzle to Vessel	CS	57.000 10.750	TBD	RV (Loop B) Inlet Nozzle Pc. 128-201 To Shell Pc. 122-101 At 67 Degrees. Reactor Building Coordinate is 113 Degrees. UT From Vessel ID.
B03.090.001A Class A	2RPV-105-121B Circumferential	NC	E 8871-121-001 CNM 2201.01-053 CNM 2201.01-0205	TBD	UT Nozzle to Vessel	CS	57.000 10.750	TBD	RV (Loop B) Inlet Nozzle Pc. 128-201 To Shell Pc. 122-101 At 67 Degrees. Reactor Building Coordinate is 113 Degrees. UT From Nozzle ID.
B03.090.002 Class A	2RPV-105-121A Circumferential	NC	E 8871-121-001 CNM 2201.01-053 CNM 2201.01-0205	TBD	UT Nozzle to Vessel	CS	57.000 10.750	TBD	RV (Loop A) Inlet Nozzle Pc. 128-202 To Shell Pc. 122-101 At 113 Degrees. Reactor Building Coordinate is 67 Degrees. UT From Vessel ID.
B03.090.002A Class A	2RPV-105-121A Circumferential	NC	E 8871-121-001 CNM 2201.01-053 CNM 2201.01-0205	TBD	UT Nozzle to Vessel	CS	57.000 10.750	TBD	RV (Loop A) Inlet Nozzle Pc. 128-202 To Shell Pc. 122-101 At 113 Degrees. Reactor Building Coordinate is 67 Degrees. UT From Nozzle ID.
B03.090.003 Class A	2RPV-105-121D Circumferential	NC	E 8871-121-001 CNM 2201.01-053 CNM 2201.01-0205	TBD	UT Nozzle to Vessel	CS	57.000 10.750	TBD	RV (Loop D) Inlet Nozzle Pc. 128-201 To Shell Pc. 122-101 At 247 Degrees. Reactor Building Coordinate is 293 Degrees. UT From Vessel ID.
B03.090.003A Class A	2RPV-105-121D Circumferential	NC	E 8871-121-001 CNM 2201.01-053 CNM 2201.01-0205	TBD	UT Nozzle to Vessel	CS	57.000 10.750	TBD	RV (Loop D) Inlet Nozzle Pc. 128-201 To Shell Pc. 122-101 At 247 Degrees. Reactor Building Coordinate is 293 Degrees. UT From Nozzle ID.
B03.090.004 Class A	2RPV-105-121C Circumferential	NC	E 8871-121-001 CNM 2201.01-053 CNM 2201.01-0205	TBD	UT Nozzle to Vessel	CS	57.000 10.750	TBD	RV (Loop C) Inlet Nozzle Pc. 128-202 To Shell Pc. 122-101 At 293 Degrees. Reactor Building Coordinate is 247 Degrees. UT From Vessel ID.
B03.090.004A Class A	2RPV-105-121C Circumferential	NC	E 8871-121-001 CNM 2201.01-053 CNM 2201.01-0205	TBD	UT Nozzle to Vessel	CS	57.000 10.750	TBD	RV (Loop C) Inlet Nozzle Pc. 128-202 To Shell Pc. 122-101 At 293 Degrees. Reactor Building Coordinate is 247 Degrees. UT From Nozzle ID.

CATEGORY B-D, Full Penetration Welded Nozzels In Vessels - Inspection Program B

Reactor Vessel

ITEM NUMBER	ID NUMBER	SYS	ISO/DWG NUMBERS	PROC	INSP REQ	MAT/SCH	DIA/THK	CAL BLOCKS	COMMENTS
B03.090.005 Class A	2RPV-107-121B Circumferential	NC	E 8871-121-001 CNM 2201.01-054 CNM 2201.01-0205	TBD	UT Nozzle to Vessel	CS	53.000 10.750	TBD	RV (Loop B) Outlet Nozzle Pc. 128-402 To Shell Pc. 122-101 At 22 Degrees. Reactor Building Coordinate is 158 Degrees. UT From Vessel ID.
B03.090.005A Class A	2RPV-107-121B Circumferential	NC	E 8871-121-001 CNM 2201.01-054 CNM 2201.01-0205	TBD	UT Nozzle to Vessel	CS	53.000 10.750	TBD	RV (Loop B) Outlet Nozzle Pc. 128-402 To Shell Pc. 122-101 At 22 Degrees. Reactor Building Coordinate is 158 Degrees. UT From Nozzle ID.
B03.090.006 Class A	2RPV-107-121A Circumferential	NC	E 8871-121-001 CNM 2201.01-054 CNM 2201.01-0205	TBD	UT Nozzle to Vessel	CS	53.000 10.750	TBD	RV (Loop A) Outlet Nozzle Pc. 128-401 To Shell Pc. 122-101 At 158 Degrees. Reactor Building Coordinate is 22 Degrees. UT From Vessel ID.
B03.090.006A Class A	2RPV-107-121A Circumferential	NC	E 8871-121-001 CNM 2201.01-054 CNM 2201.01-0205	TBD	UT Nozzle to Vessel	CS	53.000 10.750	TBD	RV (Loop A) Outlet Nozzle Pc. 128-401 To Shell Pc. 122-101 At 158 Degrees. Reactor Building Coordinate is 22 Degrees. UT From Nozzle ID.
B03.090.007 Class A	2RPV-107-121D Circumferential	NC	E 8871-121-001 CNM 2201.01-054 CNM 2201.01-0205	TBD	UT Nozzle to Vessel	CS	53.000 10.750	TBD	RV (Loop D) Outlet Nozzle Pc. 128-402 To Shell Pc. 122-101 At 202 Degrees. Reactor Building Coordinate is 338 Degrees. UT From Vessel ID.
B03.090.007A Class A	2RPV-107-121D Circumferential	NC	E 8871-121-001 CNM 2201.01-054 CNM 2201.01-0205	TBD	UT Nozzle to Vessel	CS	53.000 10.750	TBD	RV (Loop D) Outlet Nozzle Pc. 128-402 To Shell Pc. 122-101 At 202 Degrees. Reactor Building Coordinate is 338 Degrees. UT From Nozzle ID.
B03.090.008 Class A	2RPV-107-121C Circumferential	NC	E 8871-121-001 CNM 2201.01-054 CNM 2201.01-0205	TBD	UT Nozzle to Vessel	CS	53.000 10.750	TBD	RV (Loop C) Outlet Nozzle Pc. 128-401 To Shell Pc. 122-101 At 338 Degrees. Reactor Building Coordinate is 202 Degrees. UT From Vessel ID.
B03.090.008A Class A	2RPV-107-121C Circumferential	NC	E 8871-121-001 CNM 2201.01-054 CNM 2201.01-0205	TBD	UT Nozzle to Vessel	CS	53.000 10.750	TBD	RV (Loop C) Outlet Nozzle Pc. 128-401 To Shell Pc. 122-101 At 338 Degrees. Reactor Building Coordinate is 202 Degrees. UT From Nozzle ID.

Total B03.090 Items: 16

CATEGORY B-D, Full Penetration Welded Nozzels In Vessels - Inspection Program B

Pressurizer

ITEM NUMBER	ID NUMBER	SYS	ISO/DWG NUMBERS	PROC	INSP REQ	MAT/SCH	DIA/THK	CAL BLOCKS	COMMENTS
**** Nozzle-to-Vessel Welds ****									
B03.100.001 Class A	2RPV-105-121B	NC	E 8871-121-001 CNM 2201.01-053 CNM 2201.01-0205	TBD	VT-1 Nozzle to Vessel	CS	57.000 10.750		RV (Loop B) Inlet Nozzle Pc. 128-201 To Shell Pc. 122-101 At 67 Degrees. Reactor Building Coordinate is 113 Degrees. (Inside Radius Section) Enhanced Visual Examination Will Be Performed. Reference Code Case N-648-1.
B03.100.002 Class A	2RPV-105-121A	NC	E 8871-121-001 CNM 2201.01-053 CNM 2201.01-0205	TBD	VT-1 Nozzle to Vessel	CS	57.000 10.750		RV (Loop A) Inlet Nozzle Pc. 128-202 To Shell Pc. 122-101 At 113 Degrees. Reactor Building Coordinate is 67 Degrees. (Inside Radius Section) Enhanced Visual Examination Will Be Performed. Reference Code Case N-648-1.
B03.100.003 Class A	2RPV-105-121D	NC	E 8871-121-001 CNM 2201.01-053 CNM 2201.01-0205	TBD	VT-1 Nozzle to Vessel	CS	57.000 10.750		RV (Loop D) Inlet Nozzle Pc. 128-201 To Shell Pc. 122-101 At 247 Degrees. Reactor Building Coordinate is 293 Degrees. (Inside Radius Section) Enhanced Visual Examination Will Be Performed. Reference Code Case N-648-1.
B03.100.004 Class A	2RPV-105-121C	NC	E 8871-121-001 CNM 2201.01-053 CNM 2201.01-0205	TBD	VT-1 Nozzle to Vessel	CS	57.000 10.750		RV (Loop C) Inlet Nozzle Pc. 128-202 To Shell Pc. 122-101 At 293 Degrees. Reactor Building Coordinate is 247 Degrees. (Inside Radius Section) Enhanced Visual Examination Will Be Performed. Reference Code Case N-648-1.
B03.100.005 Class A	2RPV-107-121B	NC	E 8871-121-001 CNM 2201.01-054 CNM 2201.01-0205	TBD	VT-1 Nozzle to Vessel	CS	53.000 10.750		RV (Loop B) Outlet Nozzle Pc. 128-402 To Shell Pc. 122-101 At 22 Degrees. Reactor Building Coordinate is 158 Degrees. (Inside Radius Section) Enhanced Visual Examination Will Be Performed. Reference Code Case N-648-1.
B03.100.006 Class A	2RPV-107-121A	NC	E 8871-121-001 CNM 2201.01-054 CNM 2201.01-0205	TBD	VT-1 Nozzle to Vessel	CS	53.000 10.750		RV (Loop A) Outlet Nozzle Pc. 128-401 To Shell Pc. 122-101 At 158 Degrees. Reactor Building Coordinate is 22 Degrees. (Inside Radius Section) Enhanced Visual Examination Will Be Performed. Reference Code Case N-648-1.
B03.100.007 Class A	2RPV-107-121D	NC	E 8871-121-001 CNM 2201.01-054 CNM 2201.01-0205	TBD	VT-1 Nozzle to Vessel	CS	53.000 10.750		RV (Loop D) Outlet Nozzle Pc. 128-402 To Shell Pc. 122-101 At 202 Degrees. Reactor Building Coordinate is 338 Degrees. (Inside Radius Section) Enhanced Visual Examination Will Be Performed. Reference Code Case N-648-1.

CATEGORY B-D, Full Penetration Welded Nozzels In Vessels - Inspection Program B

Pressurizer

ITEM NUMBER	ID NUMBER	SYS	ISO/DWG NUMBERS	PROC	INSP REQ	MAT/SCH	DIA/THK	CAL BLOCKS	COMMENTS
B03.100.008	2RPV-107-121C		E 8871-121-001	TBD	VT-1	CS	53.000		RV (Loop C) Outlet Nozzle Pc. 128-401 To Shell Pc. 122-101 At 338 Degrees. Reactor Building Coordinate is 202 Degrees. (Inside Radius Section) Enhanced Visual Examination Will Be Performed. Reference Code Case N-648-1.
		NC	CNM 2201.01-054				10.750		
Class A			CNM 2201.01-0205		Nozzle to Vessel				

Total B03.100 Items:	**8**
Total B03 Items:	**24**

CATEGORY B-F, Pressure Retaining Dissimilar Metal Welds In Vessel Nozzles

Reactor Vessel

ITEM NUMBER	ID NUMBER	SYS	ISO/DWG NUMBERS	PROC	INSP REQ	MAT/SCH	DIA/THK	CAL BLOCKS	COMMENTS
****** Less Than NPS 4; Nozzle-to-Safe End Butt Welds ******									
B05.010.001	2RPV-201-121BSE		E 8871-171-009	TBD	UT	SS-CS	27.500	TBD	RV Inlet Nozzle To Safe End At 67 Degrees (Loop B). Reactor Building Coordinate is 113 Degrees. To Be Done With B09.011.008.
	Circumferential	NC	CNM 2201.01-74/5				2.500		
Class A	Term end		CNM 2201.01-0205		Nozzle to				
	Dissimilar				Safe End				
B05.010.001A	2RPV-201-121BSE		E 8871-171-009	NDE-35	PT	SS-CS	27.500		RV Inlet Nozzle To Safe End At 67 Degrees (Loop B). Reactor Building Coordinate is 113 Degrees. To Be Done With B09.011.008A.
	Circumferential	NC	CNM 2201.01-74/5				2.500		
Class A	Term end		CNM 2201.01-0205		Nozzle to				
	Dissimilar				Safe End				
B05.010.002	2RPV-201-121ASE		E 8871-171-009	TBD	UT	SS-CS	27.500	TBD	RV Inlet Nozzle To Safe End At 113 Degrees (Loop A). Reactor Building Coordinate is 67 Degrees. To Be Done With B09.011.004.
	Circumferential	NC	CNM 2201.01-74/5				2.500		
Class A	Term end		CNM 2201.01-0205		Nozzle to				
	Dissimilar				Safe End				
B05.010.002A	2RPV-201-121ASE		E 8871-171-009	NDE-35	PT	SS-CS	27.500		RV Inlet Nozzle To Safe End At 113 Degrees (Loop A). Reactor Building Coordinate is 67 Degrees. To Be Done With B09.011.004A.
	Circumferential	NC	CNM 2201.01-74/5				2.500		
Class A	Term end		CNM 2201.01-0205		Nozzle to				
	Dissimilar				Safe End				
B05.010.003	2RPV-201-121DSE		E 8871-171-009	TBD	UT	SS-CS	27.500	TBD	RV Inlet Nozzle To Safe End At 247 Degrees (Loop D). Reactor Building Coordinate is 293 Degrees. To Be Done With B09.011.016.
	Circumferential	NC	CNM 2201.01-74/5				2.500		
Class A	Term end		CNM 2201.01-0205		Nozzle to				
	Dissimilar				Safe End				
B05.010.003A	2RPV-201-121DSE		E 8871-171-009	NDE-35	PT	SS-CS	27.500		RV Inlet Nozzle To Safe End At 247 Degrees (Loop D). Reactor Building Coordinate is 293 Degrees. To Be Done With B09.011.016A.
	Circumferential	NC	CNM 2201.01-74/5				2.500		
Class A	Term end		CNM 2201.01-0205		Nozzle to				
	Dissimilar				Safe End				
B05.010.004	2RPV-201-121CSE		E 8871-171-009	TBD	UT	SS-CS	27.500	TBD	RV Inlet Nozzle To Safe End At 293 Degrees (Loop C). Reactor Building Coordinate is 247 Degrees. To Be Done With B09.011.012.
	Circumferential	NC	CNM 2201.01-74/5				2.500		
Class A	Term end		CNM 2201.01-0205		Nozzle to				
	Dissimilar				Safe End				
B05.010.004A	2RPV-201-121CSE		E 8871-171-009	NDE-35	PT	SS-CS	27.500		RV Inlet Nozzle To Safe End At 293 Degrees (Loop C). Reactor Building Coordinate is 247 Degrees. To Be Done With B09.011.012A.
	Circumferential	NC	CNM 2201.01-74/5				2.500		
Class A	Term end		CNM 2201.01-0205		Nozzle to				
	Dissimilar				Safe End				

CATEGORY B-F, Pressure Retaining Dissimilar Metal Welds In Vessel Nozzles

Reactor Vessel

ITEM NUMBER	ID NUMBER	SYS	ISO/DWG NUMBERS	PROC	INSP REQ	MAT/SCH	DIA/THK	CAL BLOCKS	COMMENTS
B05.010.005	2RPV-202-121BSE		E 8871-171-009	TBD	UT	SS-CS	29.000	TBD	RV Outlet Nozzle To Safe End At 22 Degrees (Loop B). Reactor Building Coordinate is 158 Degrees. To Be Done With B09.011.005.
	Circumferential	NC	CNM 2201.01-74/5				2.625		
Class A	Term end		CNM 2201.01-0205		Nozzle to Safe End				
	Dissimilar								
B05.010.005A	2RPV-202-121BSE		E 8871-171-009	NDE-35	PT	SS-CS	29.000		RV Outlet Nozzle To Safe End At 22 Degrees (Loop B). Reactor Building Coordinate is 158 Degrees. To Be Done With B09.011.005A.
	Circumferential	NC	CNM 2201.01-74/5				2.312		
Class A	Term end		CNM 2201.01-0205		Nozzle to Safe End				
	Dissimilar								
B05.010.006	2RPV-202-121ASE		E 8871-171-009	TBD	UT	SS-CS	29.000	TBD	RV Outlet Nozzle To Safe End At 158 Degrees (Loop A). Reactor Building Coordinate is 22 Degrees. To Be Done With B09.011.001.
	Circumferential	NC	CNM 2201.01-74/5				2.625		
Class A	Term end		CNM 2201.01-0205		Nozzle to Safe End				
	Dissimilar								
B05.010.006A	2RPV-202-121ASE		E 8871-171-009	NDE-35	PT	SS-CS	29.000		RV Outlet Nozzle To Safe End At 158 Degrees (Loop A). Reactor Building Coordinate is 22 Degrees. To Be Done With B09.011.001A.
	Circumferential	NC	CNM 2201.01-74/5				2.625		
Class A	Term end		CNM 2201.01-0205		Nozzle to Safe End				
	Dissimilar								
B05.010.007	2RPV-202-121DSE		E 8871-171-009	TBD	UT	SS-CS	29.000	TBD	RV Outlet Nozzle To Safe End At 202 Degrees (Loop D). Reactor Building Coordinate is 338 Degrees. To Be Done With B09.011.013.
	Circumferential	NC	CNM 2201.01-74/5				2.625		
Class A	Term end		CNM 2201.01-0205		Nozzle to Safe End				
	Dissimilar								
B05.010.007A	2RPV-202-121DSE		E 8871-171-009	NDE-35	PT	SS-CS	29.000		RV Outlet Nozzle To Safe End At 202 Degrees (Loop D). Reactor Building Coordinate is 338 Degrees. To Be Done With B09.011.013A.
	Circumferential	NC	CNM 2201.01-74/5				2.312		
Class A	Term end		CNM 2201.01-0205		Nozzle to Safe End				
	Dissimilar								
B05.010.008	2RPV-202-121CSE		E 8871-171-009	TBD	UT	SS-CS	29.000	TBD	RV Outlet Nozzle To Safe End At 338 Degrees (Loop C). Reactor Building Coordinate is 202 Degrees. To Be Done With B09.011.009.
	Circumferential	NC	CNM 2201.01-74/5				2.625		
Class A	Term end		CNM 2201.01-0205		Nozzle to Safe End				
	Dissimilar								
B05.010.008A	2RPV-202-121CSE		E 8871-121-002	NDE-35	PT	SS-CS	29.000		RV Outlet Nozzle To Safe End At 338 Degrees (Loop C). Reactor Building Coordinate is 202 Degrees. To Be Done With B09.011.009A.
	Circumferential	NC	CNM 2201.01-74/5				2.312		
Class A	Term end		CNM 2201.01-0205		Nozzle to Safe End				
	Dissimilar								

Total B05.010 Items: 16

CATEGORY B-F, Pressure Retaining Dissimilar Metal Welds In Vessel Nozzles

Steam Generator

ITEM NUMBER	ID NUMBER	SYS	ISO/DWG NUMBERS	PROC	INSP REQ	MAT/SCH	DIA/THK	CAL BLOCKS	COMMENTS
****** Less Than NPS 4; Nozzle-to-Safe End Butt Welds ******									
B05.070.005	2SGC-INLET-SE		CNM 2201.01-105/1	NDE-12	RT	SS-CS	31.000		Steam Generator 2C Inlet Nozzle To Safe End. To Be Done With B09.011.010. Schedule for re-examination in EOC15, EOC17 and EOC20 in accordance with ASME Section XI, Paragraph IWB-2420(b).
	Circumferential	NC	CN-2NC-013				2.500		
Class A			CNM 2201.01-0217		Nozzle to Safe End				
	Dissimilar								
B05.070.005A	2SGC-INLET-SE		CNM 2201.01-105/1	NDE-35	PT	SS-CS	31.000		Steam Generator 2C Inlet Nozzle To Safe End. To Be Done With B09.011.010A.
	Circumferential	NC	CN-2NC-013				2.500		
Class A			CNM 2201.01-0217		Nozzle to Safe End				
	Dissimilar								

Total B05.070 Items: 2

Total B05 Items: 18

CATEGORY B-G-1, Pressure Retaining Bolting, Greater Than 2 in. In Diameter

Pumps

ITEM NUMBER	ID NUMBER	SYS	ISO/DWG NUMBERS	PROC	INSP REQ	MAT/SCH	DIA/THK	CAL BLOCKS	COMMENTS
**** Nuts, Bushings, and Washers ****									
B06.190.001	2RCP-2A-FLANGE		CN-2NC-009	QAL-13	VT-1	SS	0.000		Reactor Colant Pump 2A Main Flange Surface.
		NC	CNM 2201.01-115				0.000		Examine When Connection Is Disassembled.
Class A									
B06.190.002	2RCP-2B-FLANGE		CN-2NC-011	QAL-13	VT-1	SS	0.000		Reactor Colant Pump 2B Main Flange Surface.
		NC	CNM 2201.01-115				0.000		Examine When Connection Is Disassembled.
Class A									
B06.190.003	2RCP-2C-FLANGE		CN-2NC-013	QAL-13	VT-1	SS	0.000		Reactor Colant Pump 2C Main Flange Surface.
		NC	CNM 2201.01-115				0.000		Examine When Connection Is Disassembled.
Class A									
B06.190.004	2RCP-2D-FLANGE		CN-2NC-015	QAL-13	VT-1	SS	0.000		Reactor Colant Pump 2D Main Flange Surface.
		NC	CNM 2201.01-115				0.000		Examine When Connection Is Disassembled.
Class A									

Total B06.190 Items: 4

Total B06 Items: 4

CATEGORY B-G-2, Pressure Retaining Bolting, 2 in. And Less In Diameter

NPS 4 or Larger

DUKE ENERGY CORPORATION
INSERVICE INSPECTION PLAN MANAGEMENT
Inservice Inspection Database Management System
Catawba 2
Inservice Inspection Plan for Interval 3 Outage 7

ITEM NUMBER	ID NUMBER	SYS	ISO/DWG NUMBERS	PROC	INSP REQ	MAT/SCH	DIA/THK	CAL BLOCKS	COMMENTS
B07.080.001	2CRD-HOUSING		CNM 2201.01-74/7 CNM 2201.01-89	QAL-13	VT-1	SS	6.000 0.000		Threaded Housing With Seal Weld. Examine Only CRD Bolting That Is Resued When Housing Is Disassembled.
Class A									

Total B07.080 Items: 1

Total B07 Items: 1

CATEGORY B-J, Pressure Retaining Welds in Piping

Less Than NPS 4

ITEM NUMBER	ID NUMBER	SYS	ISO/DWG NUMBERS	PROC	INSP REQ	MAT/SCH	DIA/THK	CAL BLOCKS	COMMENTS
B09.011.001 Class A	2NC9-1 Circumferential Dissimilar	NC	CN-2NC-009 CN-ISIN3-2553-1.0 CNM 2201.01-0205	TBD	UT Safe End to Pipe	SS-CS	29.000 2.625	TBD	Reactor Coolant Loop 2A Hot Leg. Reactor Vessel Outlet Nozzle Safe End To Pipe At 158 Degrees. Reactor Building Coordinate is 22 Degrees. To be done with B05.010.006.
B09.011.001A Class A	2NC9-1 Circumferential Dissimilar	NC	CN-2NC-009 CN-ISIN3-2553-1.0 CNM 2201.01-0205	NDE-35	PT Safe End to Pipe	SS-CS	29.000 2.300		Reactor Coolant Loop 2A Hot Leg. Reactor Vessel Outlet Nozzle Safe End To Pipe At 158 Degrees. Reactor Building Coordinate is 22 Degrees. To be done with B05.010.006A.
B09.011.004 Class A	2NC9-8 Circumferential Dissimilar	NC	CN-2NC-009 CN-ISIN3-2553-1.0 CNM 2201.01-0205	TBD	UT Safe End to Pipe	SS-CS	27.500 2.500	TBD	Reactor Coolant Loop 2A Cold Leg. Reactor Vessel Inlet Nozzle Safe End To Pipe At 113 Degrees. Reactor Building Coordinate is 67 Degrees. To be done with B05.010.002.
B09.011.004A Class A	2NC9-8 Circumferential Dissimilar	NC	CN-2NC-009 CN-ISIN3-2553-1.0 CNM 2201.01-0205	NDE-35	PT Safe End to Pipe	SS-CS	27.500 2.500		Reactor Coolant Loop 2A Cold Leg. Reactor Vessel Inlet Nozzle Safe End To Pipe At 113 Degrees. Reactor Building Coordinate is 67 Degrees. To be done with B05.010.002A.
B09.011.005 Class A	2NC11-1 Circumferential Dissimilar	NC	CN-2NC-011 CN-ISIN3-2553-1.0 CNM 2201.01-0205	TBD	UT Safe End to Pipe	SS-CS	29.000 2.625	TBD	Reactor Coolant Loop 2B Hot Leg. Reactor Vessel Outlet Nozzle Safe End At 22 Degrees. Reactor Building Coordinate Is 158 Degrees. To be done with B05.010.005.
B09.011.005A Class A	2NC11-1 Circumferential Dissimilar	NC	CN-2NC-011 CN-ISIN3-2553-1.0 CNM 2201.01-0205	NDE-35	PT Safe End to Pipe	SS-CS	29.000 2.300		Reactor Coolant Loop 2B Hot Leg. Reactor Vessel Outlet Nozzle Safe End At 22 Degrees. Reactor Building Coordinate Is 158 Degrees. To be done with B05.010.005A.

CATEGORY B-J, Pressure Retaining Welds in Piping

Less Than NPS 4

ITEM NUMBER	ID NUMBER	SYS	ISO/DWG NUMBERS	PROC	INSP REQ	MAT/SCH	DIA/THK	CAL BLOCKS	COMMENTS
B09.011.008	2NC11-8		CN-2NC-011	TBD	UT	SS-CS	27.500	TBD	Reactor Coolant Loop 2B Cold Leg. Reactor Vessel Inlet Nozzle Safe End To Pipe At 67 Degrees. Reactor Building Coordinate is 113 Degrees. To be done with B05.010.001.
	Circumferential	NC	CN-ISIN3-2553-1.0				2.500		
Class A			CNM 2201.01-0205		Safe End to Pipe				
	Dissimilar								
B09.011.008A	2NC11-8		CN-2NC-011	NDE-35	PT	SS-CS	27.500		Reactor Coolant Loop 2B Cold Leg. Reactor Vessel Inlet Nozzle Safe End To Pipe At 67 Degrees. Reactor Building Coordinate is 113 Degrees. To be done with B05.010.001A.
	Circumferential	NC	CN-ISIN3-2553-1.0				2.500		
Class A			CNM 2201.01-0205		Safe End to Pipe				
	Dissimilar								
B09.011.009	2NC13-1		CN-2NC-013	TBD	UT	SS-CS	29.000	TBD	Reactor Coolant Loop 2C Hot Leg. Reactor Vessel Outlet Nozzle Safe End To Pipe at 338 Degrees. Reactor Building Coordinate is 202 Degrees. To be done with B05.010.008.
	Circumferential	NC	CN-ISIN3-2553-1.0				2.625		
Class A			CNM 2201.01-0205		Safe End to Pipe				
	Dissimilar								
B09.011.009A	2NC13-1		CN-2NC-013	NDE-35	PT	SS-CS	29.000		Reactor Coolant Loop 2C Hot Leg. Reactor Vessel Outlet Nozzle Safe End To Pipe at 338 Degrees. Reactor Building Coordinate is 202 Degrees. To be done with B05.010.008A.
	Circumferential	NC	CN-ISIN3-2553-1.0				2.300		
Class A			CNM 2201.01-0205		Safe End to Pipe				
	Dissimilar								

CATEGORY B-J, Pressure Retaining Welds In Piping

Less Than NPS 4

ITEM NUMBER	ID NUMBER	SYS	ISO/DWG NUMBERS	PROC	INSP REQ	MAT/SCH	DIA/THK	CAL BLOCKS	COMMENTS
B09.011.010	2NC13-2		CN-2NC-013	NDE-12	RT	SS-CS	31.000		Reactor Coolant Loop 2C Hot Leg. Steam Generator 2C Inlet Nozzle Safe End To Pipe. To be done with B05.070.005. Schedule for re-examination in EOC15, EOC17 and EOC20 in accordance with ASME Section XI, Paragraph IWB-2420(b).
	Circumferential	NC	CN-ISIN3-2553-1.0				2.500		
Class A	Term end		CNM 2201.01-0217		Safe End to				
	Dissimilar				Pipe				
B09.011.010A	2NC13-2		CN-2NC-013	NDE-35	PT	SS-CS	31.000		Reactor Coolant Loop 2C Hot Leg. Steam Generator 2C Inlet Nozzle Safe End To Pipe. To be done with B05.070.005A.
	Circumferential	NC	CN-ISIN3-2553-1.0				2.500		
Class A	Term end		CNM 2201.01-0217		Safe End to				
	Dissimilar				Pipe				
B09.011.012	2NC13-8		CN-2NC-013	TBD	UT	SS-CS	27.500	TBD	Reactor Coolant Loop 2C Cold Leg. Reactor Vessel Inlet Nozzle Safe End To Pipe At 293 Degrees. Reactor Building Coordinate Is 247 Degrees. To be done with B05.010.004.
	Circumferential	NC	CN-ISIN3-2553-1.0				2.500		
Class A			CNM 2201.01-0205		Safe End to				
	Dissimilar				Pipe				
B09.011.012A	2NC13-8		CN-2NC-013	NDE-35	PT	SS-CS	27.500		Reactor Coolant Loop 2C Cold Leg. Reactor Vessel Inlet Nozzle Safe End To Pipe At 293 Degrees. Reactor Building Coordinate Is 247 Degrees. To be done with B05.010.004A.
	Circumferential	NC	CN-ISIN3-2553-1.0				2.500		
Class A			CNM 2201.01-0205		Safe End to				
	Dissimilar				Pipe				
B09.011.013	2NC15-1		CN-2NC-015	TBD	UT	SS-CS	29.000	TBD	Reactor Coolant Loop 2D Hot Leg. Reactor Vessel Outlet Nozzle Safe End To Pipe At 202 Degrees. Reactor Building Coordinate is 338 Degrees. To be done with B05.010.007.
	Circumferential	NC	CN-ISIN3-2553-1.0				2.625		
Class A			CNM 2201.01-0205		Safe End to				
	Dissimilar				Pipe				

CATEGORY B-J, Pressure Retaining Welds In Piping

Less Than NPS 4

ITEM NUMBER	ID NUMBER	SYS	ISO/DWG NUMBERS	PROC	INSP REQ	MAT/SCH	DIA/THK	CAL BLOCKS	COMMENTS
B09.011.013A Class A	2NC15-1 Circumferential Dissimilar	NC	CN-2NC-015 CN-ISIN3-2553-1.0 CNM 2201.01-0205	NDE-35	PT Safe End to Pipe	SS-CS	29.000 2.625		Reactor Coolant Loop 2D Hot Leg. Reactor Vessel Outlet Nozzle Safe End To Pipe At 202 Degrees. Reactor Building Coordinate is 338 Degrees. To be done with B05.010.007A.
B09.011.016 Class A	2NC15-8 Circumferential Dissimilar	NC	CN-2NC-015 CN-ISIN3-2553-1.0 CNM 2201.01-0205	TBD	UT Safe End to Pipe	SS-CS	27.500 2.500	TBD	Reactor Coolant Loop 2D Cold Leg. Reactor Vessel Inlet Nozzle Safe End To Pipe at 247 Degrees. Reactor Building Coordinate is 293 Degrees. To be done with B05.010.003.
B09.011.016A Class A	2NC15-8 Circumferential Dissimilar	NC	CN-2NC-015 CN-ISIN3-2553-1.0 CNM 2201.01-0205	NDE-35	PT Safe End to Pipe	SS-CS	27.500 2.500		Reactor Coolant Loop 2D Cold Leg. Reactor Vessel Inlet Nozzle Safe End To Pipe at 247 Degrees. Reactor Building Coordinate is 293 Degrees. To be done with B05.010.003A.
B09.011.022 Class A	2NC112-3 Circumferential	NC	CN-2NC-112 CN-ISIN3-2553-1.1	NDE-600	UT Elbow to Pipe	SS 160	6.000 0.719	Component	Depending on the examiners qualifications, Procedure PDI-UT-2 may be used in lieu of NDE-600. If PDI-UT-2 is used, Calibration Block PDI-UT-2-C may be used.
B09.011.022A Class A	2NC112-3 Circumferential	NC	CN-2NC-112 CN-ISIN3-2553-1.1	NDE-35	PT Elbow to Pipe	SS 160	6.000 0.719		
B09.011.027 Class A	2NC119-3 Circumferential	NC	CN-2NC-119 CN-ISIN3-2553-1.1	NDE-600	UT Pipe to Elbow	SS 160	6.000 0.719	Component	Depending on the examiners qualifications, Procedure PDI-UT-2 may be used in lieu of NDE-600. If PDI-UT-2 is used, Calibration Block PDI-UT-2-C may be used.

CATEGORY B-J, Pressure Retaining Welds In Piping

Less Than NPS 4

ITEM NUMBER	ID NUMBER	SYS	ISO/DWG NUMBERS	PROC	INSP REQ	MAT/SCH	DIA/THK	CAL BLOCKS	COMMENTS
B09.011.027A	2NC119-3		CN-2NC-119	NDE-35	PT	SS	6.000		
	Circumferential	NC	CN-ISIN3-2553-1.1			160	0.719		
Class A					Pipe to Elbow				
B09.011.038	2NC255-1		CN-2NC-255	NDE-600	UT	SS	6.000	Component	Depending on the examiners qualifications, Procedure PDI-UT-2 may be used in lieu of NDE-600. If PDI-UT-2 is used, Calibration Block PDI-UT-2-C may be used.
	Circumferential	NC	CN-ISIN3-2553-1.0				0.864		
Class A					UHI Adapter to Pipe Cap				
B09.011.038A	2NC255-1		CN-2NC-255	NDE-35	PT	SS	6.000		
	Circumferential	NC	CN-ISIN3-2553-1.0				0.864		
Class A					UHI Adapter to Pipe Cap				
B09.011.039	2NC255-3		CN-2NC-255	NDE-600	UT	SS	6.000	Component	Depending on the examiners qualifications, Procedure PDI-UT-2 may be used in lieu of NDE-600. If PDI-UT-2 is used, Calibration Block PDI-UT-2-C may be used.
	Circumferential	NC	CN-ISIN3-2553-1.0				0.864		
Class A					UHI Adapter to Pipe Cap				
B09.011.039A	2NC255-3		CN-2NC-255	NDE-35	PT	SS	6.000		
	Circumferential	NC	CN-ISIN3-2553-1.0				0.864		
Class A					UHI Adapter to Pipe Cap				
B09.011.040	2NC255-4		CN-2NC-255	NDE-600	UT	SS	6.000	Component	Depending on the examiners qualifications, Procedure PDI-UT-2 may be used in lieu of NDE-600. If PDI-UT-2 is used, Calibration Block PDI-UT-2-C may be used.
	Circumferential	NC	CN-ISIN3-2553-1.0				0.864		
Class A					UHI Adapter to Pipe Cap				
B09.011.040A	2NC255-4		CN-2NC-255	NDE-35	PT	SS	6.000		
	Circumferential	NC	CN-ISIN3-2553-1.0				0.864		
Class A					UHI Adapter to Pipe Cap				
B09.011.041	2NC257-1		CN-2NC-257	NDE-600	UT	SS	6.000	Component	Depending on the examiners qualifications, Procedure PDI-UT-2 may be used in lieu of NDE-600. If PDI-UT-2 is used, Calibration Block PDI-UT-2-C may be used.
	Circumferential	NC	CN-ISIN3-2553-1.0				0.864		
Class A					Pipe to Reducer				
B09.011.041A	2NC257-1		CN-2NC-257	NDE-35	PT	SS	6.000		
	Circumferential	NC	CN-ISIN3-2553-1.0				0.864		
Class A					Pipe to Reducer				

CATEGORY B-J, Pressure Retaining Welds In Piping

Less Than NPS 4

ITEM NUMBER	ID NUMBER	SYS	ISO/DWG NUMBERS	PROC	INSP REQ	MAT/SCH	DIA/THK	CAL BLOCKS	COMMENTS
B09.011.067	2NC48-5		CN-2NC-48	NDE-600	UT	SS	10.000	Component	Depending on the examiner's qualifications, Procedure PDI-UT-2 may be used in lieu of NDE-600.
	Circumferential	NC	CN-ISIN3-2553-1.0			140	1.000		
Class A					Elbow to Pipe				
B09.011.067A	2NC48-5		CN-2NC-48	NDE-35	PT	SS	10.000		
	Circumferential	NC	CN-ISIN3-2553-1.0			140	1.000		
Class A					Elbow to Pipe				
B09.011.161	2NI379-5		CN-2NI-379	NDE-600	UT	SS	8.000	Component	Depending on the examiners qualifications, Procedure PDI-UT-2 may be used in lieu of NDE-600. If PDI-UT-2 is used, Calibration Block PDI-UT-2-C may be used.
	Circumferential	NI	CN-ISIN3-2562-1.2			160	0.906		
Class A					Pipe to Elbow				
B09.011.161A	2NI379-5		CN-2NI-379	NDE-35	PT	SS	8.000		
	Circumferential	NI	CN-ISIN3-2562-1.2			160	0.906		
Class A					Pipe to Elbow				
B09.011.162	2NI379-8		CN-2NI-379	NDE-600	UT	SS	8.000	Component	Depending on the examiners qualifications, Procedure PDI-UT-2 may be used in lieu of NDE-600. If PDI-UT-2 is used, Calibration Block PDI-UT-2-C may be used.
	Circumferential	NI	CN-ISIN3-2562-1.2			160	0.906		
Class A					Elbow to Pipe				
B09.011.162A	2NI379-8		CN-2NI-379	NDE-35	PT	SS	8.000		
	Circumferential	NI	CN-ISIN3-2562-1.2			160	0.906		
Class A					Elbow to Pipe				
B09.011.163	2NI396-2		CN-2NI-396	NDE-600	UT	SS	4.000	Component	Depending on the examiners qualifications, Procedure PDI-UT-2 may be used in lieu of NDE-600. If PDI-UT-2 is used, Calibration Block PDI-UT-2-C may be used.
	Circumferential	NI	CN-ISIN3-2562-1.2			160	0.531		
Class A					Reducer to Pipe				
B09.011.163A	2NI396-2		CN-2NI-396	NDE-35	PT	SS	4.000		
	Circumferential	NI	CN-ISIN3-2562-1.2			160	0.531		
Class A					Reducer to Pipe				
B09.011.164	2NI396-4		CN-2NI-396	NDE-600	UT	SS	4.000	Component	Depending on the examiners qualifications, Procedure PDI-UT-2 may be used in lieu of NDE-600. If PDI-UT-2 is used, Calibration Block PDI-UT-2-C may be used.
	Circumferential	NI	CN-ISIN3-2562-1.2			160	0.531		
Class A					Pipe to Reducer				

CATEGORY B-J, Pressure Retaining Welds In Piping

Less Than NPS 4

ITEM NUMBER	ID NUMBER	SYS	ISO/DWG NUMBERS	PROC	INSP REQ	MAT/SCH	DIA/THK	CAL BLOCKS	COMMENTS
B09.011.164A	2NI396-4		CN-2NI-396	NDE-35	PT	SS	4.000		
	Circumferential	NI	CN-ISIN3-2562-1.2			160	0.531		
Class A					Pipe to Reducer				

Total B09.011 Items: 40

CATEGORY B-J, Pressure Retaining Welds in Piping

Branch Pipe Connection Welds

ITEM NUMBER	ID NUMBER	SYS	ISO/DWG NUMBERS	PROC	INSP REQ	MAT/SCH	DIA/THK	CAL BLOCKS	COMMENTS
B09.021.007	2NC140-4		CN-2NC-140	NDE-35	PT	SS	1.500		
	Circumferential	NC	CN-ISIN3-2553-1.0			160	0.281		
Class A					Pipe to Pipe				
B09.021.008	2NC140-5		CN-2NC-140	NDE-35	PT	SS	1.500		Reactor Coolant Loop 2D Cold Leg.
	Circumferential	NC	CN-ISIN3-2553-1.0			160	0.281		
Class A					Nozzle to Pipe				
B09.021.009	2NC145-5		CN-2NC-145	NDE-35	PT	SS	1.500		
	Circumferential	NC	CN-ISIN3-2553-1.0			160	0.281		
Class A					Pipe to Pipe				
B09.021.010	2NC146-6		CN-2NC-146	NDE-35	PT	SS	1.500		Reactor Coolant Loop 2C Cold Leg.
	Circumferential	NC	CN-ISIN3-2553-1.0			160	0.281		
Class A					Nozzle to Pipe				
B09.021.026	2NC74-16		CN-2NC-74	NDE-35	PT	SS	2.000		
	Circumferential	NC	CN-ISIN3-2553-1.0			160	0.344		
Class A					Pipe to Pipe				

Total B09.021 Items: 5

CATEGORY B-J, Pressure Retaining Welds In Piping

Pressure Vessels

ITEM NUMBER	ID NUMBER	SYS	ISO/DWG NUMBERS	PROC	INSP REQ	MAT/SCH	DIA/THK	CAL BLOCKS	COMMENTS
**** Welded Attachments ****									
B09.040.007	2NC53-36		CN-2NC-53	NDE-35	PT	SS	2.000		
	Socket	NC	CN-ISIN3-2553-1.0			160	0.344		
Class A					Tee to Pipe				
B09.040.008	2NC53-37		CN-2NC-53	NDE-35	PT	SS	2.000		
	Socket	NC	CN-ISIN3-2553-1.0			160	0.344		
Class A					Pipe to Tee				
B09.040.014	2NC89-20		CN-2NC-89	NDE-35	PT	SS	2.000		
	Socket	NC	CN-ISIN3-2553-1.0			160	0.344		
Class A					Pipe to Valve 2NC004				
B09.040.015	2NC89-21		CN-2NC-89	NDE-35	PT	SS	2.000		
	Socket	NC	CN-ISIN3-2553-1.0			160	0.344		
Class A					Valve 2NC004 to Pipe				
B09.040.016	2NC89-4		CN-2NC-89	NDE-35	PT	SS	2.000		
	Socket	NC	CN-ISIN3-2553-1.0			160	0.344		
Class A					Pipe to Elbow				
B09.040.017	2NC89-5		CN-2NC-89	NDE-35	PT	SS	2.000		
	Socket	NC	CN-ISIN3-2553-1.0			160	0.344		
Class A					Elbow to Pipe				
B09.040.018	2NC89-6		CN-2NC-89	NDE-35	PT	SS	2.000		
	Socket	NC	CN-ISIN3-2553-1.0			160	0.344		
Class A					Pipe to Elbow				
B09.040.019	2NC89-7		CN-2NC-89	NDE-35	PT	SS	2.000		
	Socket	NC	CN-ISIN3-2553-1.0			160	0.344		
Class A					Elbow to Pipe				

CATEGORY B-J, Pressure Retaining Welds in Piping

Pressure Vessels

ITEM NUMBER	ID NUMBER	SYS	ISO/DWG NUMBERS	PROC	INSP REQ	MAT/SCH	DIA/THK	CAL BLOCKS	COMMENTS
B09.040.062	2NI306-4		CN-2NI-306	NDE-35	PT	SS	1.500		
	Socket	NI	CN-ISIN3-2562-1.0			160	0.281		
Class A					Elbow to Pipe				
B09.040.063	2NI306-6		CN-2NI-306	NDE-35	PT	SS	2.000		
	Socket	NI	CN-ISIN3-2562-1.0			160	0.344		
Class A					Reducing Insert to Valve 2NI351				
B09.040.064	2NI322-2		CN-2NI-322	NDE-35	PT	SS	2.000		
	Socket	NI	CN-ISIN3-2562-1.2			160	0.344		
Class A					Pipe to Elbow				
B09.040.065	2NI322-4		CN-2NI-322	NDE-35	PT	SS	2.000		
	Socket	NI	CN-ISIN3-2562-1.2			160	0.344		
Class A					Pipe to Special Weld Boss				
B09.040.066	2NI396-13		CN-2NI-396	NDE-35	PT	SS	2.000		
	Socket	NI	CN-ISIN3-2562-1.2			160	0.344		
Class A					Tee to Pipe				
B09.040.067	2NI396-18		CN-2NI-396	NDE-35	PT	SS	2.000		
	Socket	NI	CN-ISIN3-2562-1.2			160	0.344		
Class A					Pipe to Elbow				
B09.040.068	2NI396-20		CN-2NI-396	NDE-35	PT	SS	2.000		
	Socket	NI	CN-ISIN3-2562-1.2			160	0.344		
Class A					Pipe to Valve 2NI159				
B09.040.069	2NI396-21		CN-2NI-396	NDE-35	PT	SS	2.000		
	Socket	NI	CN-ISIN3-2562-1.2			160	0.344		
Class A					Elbow to Pipe				

Total B09.040 Items: 16

Total B09 Items: 61

CATEGORY B-L-2, Pump Casings

Valves

ITEM NUMBER	ID NUMBER	SYS	ISO/DWG NUMBERS	PROC	INSP REQ	MAT/SCH	DIA/THK	CAL BLOCKS	COMMENTS
****** Valves, Less Than NPS 4; Valve Body Welds ******									
B12.020.001	2RCP-2A		CN-2NC-9	QAL-14	VT-3	SS	77.000		Reactor Coolant Pump 2A Casing Internal Surfaces. Only One Pump Required To Be Examined Per Interval. Inspect Only If Pump Is Disassembled For Maintenance, Repair, Or Volumetric Examination.
Class A		NC	CNM-1201.01-115				4.500		
B12.020.002	2RCP-2B		CN-2NC-11	QAL-14	VT-3	SS	77.000		Reactor Coolant Pump 2B Casing Internal Surfaces. Only One Pump Required To Be Examined Per Interval. Inspect Only If Pump Is Disassembled For Maintenance, Repair, Or Volumetric Examination.
Class A		NC	CNM-1201.01-115				4.500		
B12.020.003	2RCP-2C		CN-2NC-13	QAL-14	VT-3	SS	77.000		Reactor Coolant Pump 2C Casing Internal Surfaces. Only One Pump Required To Be Examined Per Interval. Inspect Only If Pump Is Disassembled For Maintenance, Repair, Or Volumetric Examination.
Class A		NC	CNM-1201.01-115				4.500		
B12.020.004	2RCP-2D		CN-2NC-15	QAL-14	VT-3	SS	77.000		Reactor Coolant Pump 2D Casing Internal Surfaces. Only One Pump Required To Be Examined Per Interval. Inspect Only If Pump Is Disassembled For Maintenance, Repair, Or Volumetric Examination.
Class A		NC	CNM-1201.01-115				4.500		

Total B12.020 Items: 4

CATEGORY B-M-1, Pressure Retaining Welds In Valve Bodies

Valves

ITEM NUMBER	ID NUMBER	SYS	ISO/DWG NUMBERS	PROC	INSP REQ	MAT/SCH	DIA/THK	CAL BLOCKS	COMMENTS
****** Valve Body, Exceeding NPS 4 ******									
B12.040.001B	2ND-37A		CN-2ND-66	NDE-3630	UT	SS	20.000	50354	Valve Body To Bonnet Weld.
	Circumferential	ND	CNM-1205.00-262				2.430		Inspect one of the following Valves: 2ND-1B, 2ND-2A, 2ND-36B, or 2ND-37A.
Class A					Valve Body to Bonnett				

Total B12.040 Items: 1

Reactor Vessel

Catawba 2

Inservice Inspection Plan for Interval 3 Outage 7

ITEM NUMBER	ID NUMBER	SYS	ISO/DWG NUMBERS	PROC	INSP REQ	MAT/SCH	DIA/THK	CAL BLOCKS	COMMENTS
**** Vessel Interior ****									
B12.050.001A Class A	2NC-1	NC	CN-2NC-112 CNM-1205.09-01	QAL-14	VT-3	SS 160	6.000 0.719		6" Relief Valve. Inspect One Of The Following Valves: 2NC-1, 2NC-2, Or 2NC-3. Inspect Only If Disassembled For Maintenance, Repair, Or Volumetric Examination.
B12.050.001B Class A	2NC-2	NC	CN-2NC-119 CNM-1205.09-01	QAL-14	VT-3	SS 160	6.000 0.719		6" Relief Valve. Inspect One Of The Following Valves: 2NC-1, 2NC-2, Or 2NC-3. Inspect Only If Disassembled For Maintenance, Repair, Or Volumetric Examination.
B12.050.001C Class A	2NC-3	NC	CN-2NC-163 CNM-1205.09-01	QAL-14	VT-3	SS 160	6.000 0.719		6" Relief Valve. Inspect One Of The Following Valves: 2NC-1, 2NC-2, Or 2NC-3. Inspect Only If Disassembled For Maintenance, Repair, Or Volumetric Examination.
B12.050.002A Class A	2NC-27	NC	CN-2NC-24 CNM-1205.06-41	QAL-14	VT-3	SS 160	6.000 0.719		6" Fisher Control Valve. Inspect One Of The Following Valves: 2NC-27, Or 2NC-29. Inspect Only If Disassembled For Maintenance, Repair, Or Volumetric Examination.
B12.050.002B Class A	2NC-29	NC	CN-2NC-33 CNM-1205.06-41	QAL-14	VT-3	SS 160	6.000 0.719		6" Fisher Control Valve. Inspect One Of The Following Valves: 2NC-27, Or 2NC-29. Inspect Only If Disassembled For Maintenance, Repair, Or Volumetric Examination.
B12.050.003A Class A	2ND-36B	ND	CN-2ND-66 CNM-1205.00-262	QAL-14	VT-3	SS 140	12.000 2.043		12" Borg Warner Gate Valve. Inspect One Of The Following Valves: 2ND-1B, 2ND-2A, 2ND-36B, Or 2ND-37A. Inspect Only If Disassembled For Maintenance, Repair, Or Volumetric Examination.
B12.050.003B Class A	2ND-37A	ND	CN-2ND-66 CNM-1205.00-262	QAL-14	VT-3	SS 140	12.000 2.043		12" Borg Warner Gate Valve. Inspect One Of The Following Valves: 2ND-1B, 2ND-2A, 2ND-36B, Or 2ND-37A. Inspect Only If Disassembled For Maintenance, Repair, Or Volumetric Examination.
B12.050.003C Class A	2ND-1B	ND	CN-2ND-67 CNM-1205.00-262	QAL-14	VT-3	SS 140	12.000 2.043		12" Borg Warner Gate Valve. Inspect One Of The Following Valves: 2ND-1B, 2ND-2A, 2ND-36B, Or 2ND-37A. Inspect Only If Disassembled For Maintenance, Repair, Or Volumetric Examination.

CATEGORY B-M-2, Valve Body

Reactor Vessel

ITEM NUMBER	ID NUMBER	SYS	ISO/DWG NUMBERS	PROC	INSP REQ	MAT/SCH	DIA/THK	CAL BLOCKS	COMMENTS
B12.050.003D	2ND-2A		CN-2ND-67	QAL-14	VT-3	SS	12.000		12" Borg Warner Gate Valve. Inspect One Of The Following Valves: 2ND-1B, 2ND-2A, 2ND-36B, Or 2ND-37A. Inspect Only If Disassembled For Maintenance, Repair, Or Volumetric Examination.
Class A		ND	CNM-1205.00-262			140	2.043		
B12.050.004A	2NI-126		CN-2NI-379	QAL-14	VT-3	SS	6.000		6" Westinghouse Check Valve. Inspect One Of The Following Valves: 2NI-126, 2NI-134, 2NI-157, 2NI-160, 2NI-175, 2NI-176, 2NI-180, Or 2NI-181. Inspect Only If Disassembled For Maintenance, Repair, Or Volumetric Examination.
Class A		NI	CNM-1205.00-63			160	0.719		
B12.050.004B	2NI-134		CN-2NI-91	QAL-14	VT-3	SS	6.000		6" Westinghouse Check Valve. Inspect One Of The Following Valves: 2NI-126, 2NI-134, 2NI-157, 2NI-160, 2NI-175, 2NI-176, 2NI-180, Or 2NI-181. Inspect Only If Disassembled For Maintenance, Repair, Or Volumetric Examination.
Class A		NI	CNM-1205.00-63			160	0.719		
B12.050.004C	2NI-157		CN-2NI-398	QAL-14	VT-3	SS	6.000		6" Westinghouse Check Valve. Inspect One Of The Following Valves: 2NI-126, 2NI-134, 2NI-157, 2NI-160, 2NI-175, 2NI-176, 2NI-180, Or 2NI-181. Inspect Only If Disassembled For Maintenance, Repair, Or Volumetric Examination.
Class A		NI	CNM-1205.00-63			160	0.719		
B12.050.004D	2NI-160		CN-2NI-396	QAL-14	VT-3	SS	6.000		6" Westinghouse Check Valve. Inspect One Of The Following Valves: 2NI-126, 2NI-134, 2NI-157, 2NI-160, 2NI-175, 2NI-176, 2NI-180, Or 2NI-181. Inspect Only If Disassembled For Maintenance, Repair, Or Volumetric Examination.
Class A		NI	CNM-1205.00-63			160	0.719		
B12.050.004E	2NI-175		CN-2NI-70	QAL-14	VT-3	SS	6.000		6" Westinghouse Check Valve. Inspect One Of The Following Valves: 2NI-126, 2NI-134, 2NI-157, 2NI-160, 2NI-175, 2NI-176, 2NI-180, Or 2NI-181. Inspect Only If Disassembled For Maintenance, Repair, Or Volumetric Examination.
Class A		NI	CNM-1205.00-63			160	0.719		
B12.050.004F	2NI-176		CN-2NI-77	QAL-14	VT-3	SS	6.000		6" Westinghouse Check Valve. Inspect One Of The Following Valves: 2NI-126, 2NI-134, 2NI-157, 2NI-160, 2NI-175, 2NI-176, 2NI-180, Or 2NI-181. Inspect Only If Disassembled For Maintenance, Repair, Or Volumetric Examination.
Class A		NI	CNM-1205.00-63			160	0.719		

CATEGORY B-M-2, Valve Body

Reactor Vessel

Catawba 2
Inservice Inspection Plan for Interval 3 Outage 7

ITEM NUMBER	ID NUMBER	SYS	ISO/DWG NUMBERS	PROC	INSP REQ	MAT/SCH	DIA/THK	CAL BLOCKS	COMMENTS
B12.050.004G Class A	2NI-180	NI	CN-2NI-145 CNM-1205.00-63	QAL-14	VT-3	SS 160	6.000 0.719		6" Westinghouse Check Valve. Inspect One Of The Following Valves: 2NI-126, 2NI-134, 2NI-157, 2NI-160, 2NI-175, 2NI-176, 2NI-180, Or 2NI-181. Inspect Only If Disassembled For Maintenance, Repair, Or Volumetric Examination.
B12.050.004H Class A	2NI-181	NI	CN-2NI-75 CNM-1205.00-63	QAL-14	VT-3	SS 160	6.000 0.719		6" Westinghouse Check Valve. Inspect One Of The Following Valves: 2NI-126, 2NI-134, 2NI-157, 2NI-160, 2NI-175, 2NI-176, 2NI-180, Or 2NI-181. Inspect Only If Disassembled For Maintenance, Repair, Or Volumetric Examination.
B12.050.005A Class A	2NI-54A	NI	CN-2NI-59 CNM-1205.00-71	QAL-14	VT-3	SS 140	10.000 1.000		10" Westinghouse Gate Valve. Inspect One Of The Following Valves: 2NI-54A, 2NI-65B, 2NI-76A, Or 2NI-88B. Inspect Only If Disassembled For Maintenance, Repair, Or Volumetric Examination.
B12.050.005B Class A	2NI-65B	NI	CN-2NI-61 CNM-1205.00-71	QAL-14	VT-3	SS 140	10.000 1.000		10" Westinghouse Gate Valve. Inspect One Of The Following Valves: 2NI-54A, 2NI-65B, 2NI-76A, Or 2NI-88B. Inspect Only If Disassembled For Maintenance, Repair, Or Volumetric Examination.
B12.050.005C Class A	2NI-76A	NI	CN-2NI-63 CNM-1205.00-71	QAL-14	VT-3	SS 140	10.000 1.000		10" Westinghouse Gate Valve. Inspect One Of The Following Valves: 2NI-54A, 2NI-65B, 2NI-76A, Or 2NI-88B. Inspect Only If Disassembled For Maintenance, Repair, Or Volumetric Examination.
B12.050.005D Class A	2NI-88B	NI	CN-2NI-57 CNM-1205.00-71	QAL-14	VT-3	SS 140	10.000 1.000		10" Westinghouse Gate Valve. Inspect One Of The Following Valves: 2NI-54A, 2NI-65B, 2NI-76A, Or 2NI-88B. Inspect Only If Disassembled For Maintenance, Repair, Or Volumetric Examination.
B12.050.006A Class A	2NI-59	NI	CN-2NI-184 CNM-1205.00-62	QAL-14	VT-3	SS 140	10.000 1.000		10" Westinghouse Check Valve. Inspect One Of The Following Valves: 2NI-59, 2NI-60, 2NI-70, 2NI-71, 2NI-81, 2NI-82, 2NI-93, Or 2NI-94. Inspect Only If Disassembled For Maintenance, Repair, Or Volumetric Examination.
B12.050.006B Class A	2NI-60	NI	CN-2NI-184 CNM-1205.00-62	QAL-14	VT-3	SS 140	10.000 1.000		10" Westinghouse Check Valve. Inspect One Of The Following Valves: 2NI-59, 2NI-60, 2NI-70, 2NI-71, 2NI-81, 2NI-82, 2NI-93, Or 2NI-94. Inspect Only If Disassembled For Maintenance, Repair, Or Volumetric Examination.

CATEGORY B-M-2, Valve Body

Reactor Vessel

Catawba 2
Inservice Inspection Plan for Interval 3 Outage 7

ITEM NUMBER	ID NUMBER	SYS	ISO/DWG NUMBERS	PROC	INSP REQ	MAT/SCH	DIA/THK	CAL BLOCKS	COMMENTS
B12.050.006C Class A	2NI-70	NI	CN-2NI-185 CNM-1205.00-62	QAL-14	VT-3	SS 140	10.000 1.000		10" Westinghouse Check Valve. Inspect One Of The Following Valves: 2NI-59, 2NI-60, 2NI-70, 2NI-71, 2NI-81, 2NI-82, 2NI-93, Or 2NI-94. Inspect Only If Disassembled For Maintenance, Repair, Or Volumetric Examination.
B12.050.006D Class A	2NI-71	NI	CN-2NI-185 CNM-1205.00-62	QAL-14	VT-3	SS 140	10.000 1.000		10" Westinghouse Check Valve. Inspect One Of The Following Valves: 2NI-59, 2NI-60, 2NI-70, 2NI-71, 2NI-81, 2NI-82, 2NI-93, Or 2NI-94. Inspect Only If Disassembled For Maintenance, Repair, Or Volumetric Examination.
B12.050.006E Class A	2NI-81	NI	CN-2NI-55 CNM-1205.00-62	QAL-14	VT-3	SS 140	10.000 1.000		10" Westinghouse Check Valve. Inspect One Of The Following Valves: 2NI-59, 2NI-60, 2NI-70, 2NI-71, 2NI-81, 2NI-82, 2NI-93, Or 2NI-94. Inspect Only If Disassembled For Maintenance, Repair, Or Volumetric Examination.
B12.050.006F Class A	2NI-82	NI	CN-2NI-55 CNM-1205.00-62	QAL-14	VT-3	SS 140	10.000 1.000		10" Westinghouse Check Valve. Inspect One Of The Following Valves: 2NI-59, 2NI-60, 2NI-70, 2NI-71, 2NI-81, 2NI-82, 2NI-93, Or 2NI-94. Inspect Only If Disassembled For Maintenance, Repair, Or Volumetric Examination.
B12.050.006G Class A	2NI-93	NI	CN-2NI-183 CNM-1205.00-62	QAL-14	VT-3	SS 140	10.000 1.000		10" Westinghouse Check Valve. Inspect One Of The Following Valves: 2NI-59, 2NI-60, 2NI-70, 2NI-71, 2NI-81, 2NI-82, 2NI-93, Or 2NI-94. Inspect Only If Disassembled For Maintenance, Repair, Or Volumetric Examination.
B12.050.006H Class A	2NI-94	NI	CN-2NI-183 CNM-1205.00-62	QAL-14	VT-3	SS 140	10.000 1.000		10" Westinghouse Check Valve. Inspect One Of The Following Valves: 2NI-59, 2NI-60, 2NI-70, 2NI-71, 2NI-81, 2NI-82, 2NI-93, Or 2NI-94. Inspect Only If Disassembled For Maintenance, Repair, Or Volumetric Examination.
B12.050.007A Class A	2NI-125	NI	CN-2NI-94 CNM-1205.00-59	QAL-14	VT-3	SS 160	8.000 0.906		8" Westinghouse Check Valve. Inspect One Of The Following Valves: 2NI-125 Or 2N1-129. Inspect Only If Disassembled For Maintenance, Repair, Or Volumetric Examination.

CATEGORY B-M-2, Valve Body

Reactor Vessel

ITEM NUMBER	ID NUMBER	SYS	ISO/DWG NUMBERS	PROC	INSP REQ	MAT/SCH	DIA/THK	CAL BLOCKS	COMMENTS
B12.050.007B	2NI-129		CN-2NI-92	QAL-14	VT-3	SS	8.000		8" Westinghouse Check Valve. Inspect One Of The Following Valves: 2NI-125 Or 2N1-129. Inspect Only If Disassembled For Maintenance, Repair, Or Volumetric Examination.
		NI	CNM-1205.00-59			160	0.906		
Class A									

Total B12.050 Items:	**31**
Total B12 Items:	**36**

CATEGORY B-N-1, Interior Of Reactor Vessel

Reactor Vessel (PWR)

ITEM NUMBER	ID NUMBER	SYS	ISO/DWG NUMBERS	PROC	INSP REQ	MAT/SCH	DIA/THK	CAL BLOCKS	COMMENTS
****** Interior Attachments Within Beltline Region ******									
B13.010.001	2RPV-INTERIOR		CNM 2201.01-51	QAL-14	VT-3	SS	0.000		Reactor Vessel Interior. Areas To Be Examined Shall Include The Spaces Above And Below The Reactor Core That Are Accessible For Examination By Removal Of Components During Normal Refueling Outages. Inspect Each Inspection Period.
		NC	CNM 2201.01-67				0.000		
Class A			CNM 2201.01-0205						

Total B13.010 Items: 1

CATEGORY B-N-2, Welded Core Support Structures And Interior Attachments To RV

Reactor Vessel (PWR)

ITEM NUMBER	ID NUMBER	SYS	ISO/DWG NUMBERS	PROC	INSP REQ	MAT/SCH	DIA/THK	CAL BLOCKS	COMMENTS
****** Core Support Structure ******									
B13.060.001	2RPV-CLEVIS		CNM 2201.01-74/4 CNM 2201.01-0205	QAL-14	VT-3	SS	0.000 0.000		Interior Attachments Beyond The Beltline Region. 6 Clevis Located On The Reactor Vessel Lower Shell At Approximately 60 Degree Intervals.
Class A									
B13.060.002	2RPV-INCORE		CNM 2201.01-74/2 CNM 2201.01-0205	QAL-14	VT-3	SS	0.000 0.000		Interior Attachments Beyond The Beltline Region. 58 Incore Instrumentation Nozzles Located On The Lower Head.
Class A									

Total B13.060 Items: 2

CATEGORY B-N-3, Removable Core Support Structures

Reactor Vessel

ITEM NUMBER	ID NUMBER	SYS	ISO/DWG NUMBERS	PROC	INSP REQ	MAT/SCH	DIA/THK	CAL BLOCKS	COMMENTS
****** Welds in CRD Housing ******									
B13.070.001	2RPV-CORE-SUP		CNM 2201.01-51 CNM 2201.01-0205	QAL-14	VT-3	SS	0.000 0.000		Reactor Vessel Core Support Structure. The Structure Shall Be Removed From The Reactor Vessel For Examination.
Class A									

Total B13.070 Items:	**1**
Total B13 Items:	**4**

CATEGORY C-A, Pressure Retaining Welds In Pressure Vessels

Head Circumferential Welds

ITEM NUMBER	ID NUMBER	SYS	ISO/DWG NUMBERS	PROC	INSP REQ	MAT/SCH	DIA/THK	CAL BLOCKS	COMMENTS
C01.010.006	2SWRF-1-3		CN-ISIN3-2554-1.6	NDE-35	PT	SS	6.625		Seal Water Return Filter Shell Pc.1 to Seal Ring Pc.3. A PT may be perfomed in lieu of a UT per Note 5 in Table IWC-2500-1 of Examination Category C-A.
	Circumferential	NV	CNM 1201.04-078				0.134		
Class B					Shell to Seal Ring				

Total C01.010 Items: 1

CATEGORY C-A, Pressure Retaining Welds In Pressure Vessels

Tubesheet-to-Shell Weld

ITEM NUMBER	ID NUMBER	SYS	ISO/DWG NUMBERS	PROC	INSP REQ	MAT/SCH	DIA/THK	CAL BLOCKS	COMMENTS
C01.020.012	2SWRF-1-2		CN-ISIN3-2554-1.6	NDE-35	PT	SS	6.625		Seal Water Return Filter Shell Pc.1 To Head Pc.2. A PT may be perfomed in lieu of a UT per Note 5 in Table IWC-2500-1 of Examination Category C-A.
	Circumferential	NV	CNM 1201.04-78				0.134		
Class B					Shell to Head				

Total C01.020 Items: 1

Total C01 Items: 2

CATEGORY C-B, Pressure Retaining Nozzle Welds In Vessels

Nozzles Without Reinforcing Plate in Vessels > 1/2 in. Nom. Thickness

DUKE ENERGY CORPORATION
INSERVICE INSPECTION PLAN MANAGEMENT
Inservice Inspection Database Management System
Catawba 2
Inservice Inspection Plan for Interval 3 Outage 7

ITEM NUMBER	ID NUMBER	SYS	ISO/DWG NUMBERS	PROC	INSP REQ	MAT/SCH	DIA/THK	CAL BLOCKS	COMMENTS
**** Nozzles Without Reinforcing Plate In Vessels > 1/2 in. Nom. Thickness ****									
C02.011.003	2SWRF-1-OUTLET		CNM 1201.04-078	NDE-35	PT	SS	2.000		Seal Water Return Filter Outlet Nozzle.
	Circumferential	NV	CN-ISIN-2554-1.6				0.154		
Class B					Nozzle to Shell				

Total C02.011 Items: 1

CATEGORY C-B, Pressure Retaining Nozzle Welds In Vessels

Nozzles Without Reinforcing Plate in Vessels > 1/2 in. Nom. Thickness

ITEM NUMBER	ID NUMBER	SYS	ISO/DWG NUMBERS	PROC	INSP REQ	MAT/SCH	DIA/THK	CAL BLOCKS	COMMENTS
****** Nozzle Inside Radius Section ******									
C02.021.003	2SGD-UH-15		CNM 2201.01-102/1	NDE-640	UT	CS	32.000	50366	Steam Generator 2D Main Steam Nozzle Pc.7 To Upper Head Pc.15.
	Circumferential	NC	CN-ISIN3-2591-1.1	NDE-820			3.820		
Class B			CNM 2201.01-114/1		Nozzle to Upper Head				
C02.021.003A	2SGD-UH-15		CNM 2201.01-102/1	NDE-25	MT	CS	32.000		Steam Generator 2D Main Steam Nozzle Pc.7 To Upper Head Pc.15.
	Circumferential	NC	CN-ISIN3-2591-1.1				3.820		
Class B			CNM 2201.01-114/1		Nozzle to Upper Head				

Total C02.021 Items:	**2**
Total C02 Items:	**3**

CATEGORY C-C, Welded Attachments For Vessels, Piping, Pumps, And Valves

Piping

DUKE ENERGY CORPORATION
INSERVICE INSPECTION PLAN MANAGEMENT
Inservice Inspection Database Management System
Catawba 2
Inservice Inspection Plan for Interval 3 Outage 7

ITEM NUMBER	ID NUMBER	SYS	ISO/DWG NUMBERS	PROC	INSP REQ	MAT/SCH	DIA/THK	CAL BLOCKS	COMMENTS
****** Welded Attachments ******									
C03.010.021	2SWRF-SUPPORT		CNM 1201.04-078	NDE-35	PT	SS	6.000		Seal Water Return Filter.
	Rigid Support	NV	CN-ISIN3-2554-1.6				0.250		
Class B					Support Legs to Shell				

Total C03.010 Items: 1

CATEGORY C-C, Welded Attachments For Vessels, Piping, Pumps, And Valves

Pressure Vessels

ITEM NUMBER	ID NUMBER	SYS	ISO/DWG NUMBERS	PROC	INSP REQ	MAT/SCH	DIA/THK	CAL BLOCKS	COMMENTS
****** Bolts and Studs ******									
C03.040.001	2-R-SV-1573		CN-2591-SV005	NDE-25	MT	CS	0.000		
	Rigid Support	SV	CN-ISIN3-2493-1.0				1.000		
Class B					Lug to Valve				
C03.040.002	2-R-SV-1574		CN-2591-SV005	NDE-25	MT	CS	0.000		Support 2-R-SV-1574 to Forged Bracket on Valve Body.
	Rigid Support	SV	CN-ISIN-2493-1.0				1.000		
Class B					Support to Forged Bracket				

Total C03.040 Items: 2

Total C03 Items: 3

CATEGORY C-F-1, Pressure Retaining Welds In Austenitic SS Or High Alloy Piping

Piping Welds > 1/5 in. Nom Wall for Piping >= NPS 2 and <= NPS 4

ITEM NUMBER	ID NUMBER	SYS	ISO/DWG NUMBERS	PROC	INSP REQ	MAT/SCH	DIA/THK	CAL BLOCKS	COMMENTS
****** Piping Welds > 1/5 in. Nom Wall For Piping >= NPS 2 And <= NPS 4 ******									
C05.011.173	2ND24-2		CN-2ND-24	NDE-600	UT	SS	12.000	Component	Depending on the examiners qualifications, Procedure PDI-UT-2 may be used in lieu of NDE-600. If PDI-UT-2 is used, Calibration Block PDI-UT-2-C may be used.
	Circumferential	ND	CN-ISIN3-2561-1.0			STD	0.375		
Class B					Pipe to Elbow				
C05.011.173A	2ND24-2		CN-2ND-24	NDE-35	PT	SS	12.000		
	Circumferential	ND	CN-ISIN3-2561-1.0			STD	0.375		
Class B					Pipe to Elbow				
C05.011.174	2ND24-4		CN-2ND-24	NDE-600	UT	SS	12.000	Component	Depending on the examiners qualifications, Procedure PDI-UT-2 may be used in lieu of NDE-600. If PDI-UT-2 is used, Calibration Block PDI-UT-2-C may be used.
	Circumferential	ND	CN-ISIN3-2561-1.0			STD	0.375		
Class B					Elbow to Pipe				
C05.011.174A	2ND24-4		CN-2ND-24	NDE-35	PT	SS	12.000		
	Circumferential	ND	CN-ISIN3-2561-1.0			STD	0.375		
Class B					Elbow to Pipe				
C05.011.175	2ND24-6		CN-2ND-24	NDE-600	UT	SS	12.000	Component	Depending on the examiners qualifications, Procedure PDI-UT-2 may be used in lieu of NDE-600. If PDI-UT-2 is used, Calibration Block PDI-UT-2-C may be used.
	Circumferential	ND	CN-ISIN3-2561-1.0			STD	0.375		
Class B					Elbow to Elbow				
C05.011.175A	2ND24-6		CN-2ND-24	NDE-35	PT	SS	12.000		
	Circumferential	ND	CN-ISIN3-2561-1.0			STD	0.375		
Class B					Elbow to Elbow				
C05.011.176	2ND24-8		CN-2ND-24	NDE-600	UT	SS	12.000	Component	Depending on the examiners qualifications, Procedure PDI-UT-2 may be used in lieu of NDE-600. If PDI-UT-2 is used, Calibration Block PDI-UT-2-C may be used.
	Circumferential	ND	CN-ISIN3-2561-1.0			STD	0.375		
Class B					Pipe to Elbow				
C05.011.176A	2ND24-8		CN-2ND-24	NDE-35	PT	SS	12.000		
	Circumferential	ND	CN-ISIN3-2561-1.0			STD	0.375		
Class B					Pipe to Elbow				

CATEGORY C-F-1, Pressure Retaining Welds In Austenitic SS Or High Alloy Piping

Piping Welds > 1/5 in. Nom Wall for Piping >= NPS 2 and <= NPS 4

ITEM NUMBER	ID NUMBER	SYS	ISO/DWG NUMBERS	PROC	INSP REQ	MAT/SCH	DIA/THK	CAL BLOCKS	COMMENTS
C05.011.177	2ND24-16		CN-2ND-24	NDE-600	UT	SS	12.000	Component	Depending on the examiners qualifications, Procedure PDI-UT-2 may be used in lieu of NDE-600. If PDI-UT-2 is used, Calibration Block PDI-UT-2-C may be used.
	Circumferential	ND	CN-ISIN3-2561-1.0			STD	0.375		
Class B					Pipe to Flange				
C05.011.177A	2ND24-16		CN-2ND-24	NDE-35	PT	SS	12.000		
	Circumferential	ND	CN-ISIN3-2561-1.0			STD	0.375		
Class B					Pipe to Flange				
C05.011.183	2ND46-4		CN-2ND-46	NDE-600	UT	SS	12.000	Component	Depending on the examiners qualifications, Procedure PDI-UT-2 may be used in lieu of NDE-600. If PDI-UT-2 is used, Calibration Block PDI-UT-2-C may be used.
	Circumferential	ND	CN-ISIN3-2561-1.0			STD	0.375		
Class B					Elbow to Pipe				
C05.011.183A	2ND46-4		CN-2ND-46	NDE-35	PT	SS	12.000		
	Circumferential	ND	CN-ISIN3-2561-1.0			STD	0.375		
Class B					Elbow to Pipe				
C05.011.314	2NI73-10		CN-2NI-73	NDE-600	UT	SS	6.000	Component	Depending on the examiners qualifications, Procedure PDI-UT-2 may be used in lieu of NDE-600. If PDI-UT-2 is used, Calibration Block PDI-UT-2-C may be used.
	Circumferential	NI	CN-ISIN3-2562-1.3			160	0.719		
Class B					Flange to Pipe				
C05.011.314A	2NI73-10		CN-2NI-73	NDE-35	PT	SS	6.000		
	Circumferential	NI	CN-ISIN3-2562-1.3			160	0.719		
Class B					Flange to Pipe				
C05.011.315	2NI73-11		CN-2NI-73	NDE-600	UT	SS	6.000	Component	Depending on the examiners qualifications, Procedure PDI-UT-2 may be used in lieu of NDE-600. If PDI-UT-2 is used, Calibration Block PDI-UT-2-C may be used.
	Circumferential	NI	CN-ISIN3-2562-1.3			160	0.719		
Class B					Pipe to Flange				
C05.011.315A	2NI73-11		CN-2NI-73	NDE-35	PT	SS	6.000		
	Circumferential	NI	CN-ISIN3-2562-1.3			160	0.719		
Class B					Pipe to Flange				
C05.011.316	2NI73-2		CN-2NI-73	NDE-600	UT	SS	6.000	Component	Depending on the examiners qualifications, Procedure PDI-UT-2 may be used in lieu of NDE-600. If PDI-UT-2 is used, Calibration Block PDI-UT-2-C may be used.
	Circumferential	NI	CN-ISIN3-2562-1.3			160	0.719		
Class B					Pipe to Elbow				

CATEGORY C-F-1, Pressure Retaining Welds In Austenitic SS Or High Alloy Piping

Piping Welds > 1/5 in. Nom Wall for Piping >= NPS 2 and <= NPS 4

ITEM NUMBER	ID NUMBER	SYS	ISO/DWG NUMBERS	PROC	INSP REQ	MAT/SCH	DIA/THK	CAL BLOCKS	COMMENTS
C05.011.316A	2NI73-2		CN-2NI-73	NDE-35	PT	SS	6.000		
	Circumferential	NI	CN-ISIN3-2562-1.3			160	0.719		
Class B					Pipe to Elbow				
C05.011.317	2NI73-4		CN-2NI-73	NDE-600	UT	SS	6.000	Component	Depending on the examiners qualifications, Procedure PDI-UT-2 may be used in lieu of NDE-600. If PDI-UT-2 is used, Calibration Block PDI-UT-2-C may be used.
	Circumferential	NI	CN-ISIN3-2562-1.3			160	0.719		
Class B					Elbow to Pipe				
C05.011.317A	2NI73-4		CN-2NI-73	NDE-35	PT	SS	6.000		
	Circumferential	NI	CN-ISIN3-2562-1.3			160	0.719		
Class B					Elbow to Pipe				
C05.011.318	2NI76-2		CN-2NI-76	NDE-600	UT	SS	6.000	Component	Depending on the examiners qualifications, Procedure PDI-UT-2 may be used in lieu of NDE-600. If PDI-UT-2 is used, Calibration Block PDI-UT-2-C may be used.
	Circumferential	NI	CN-ISIN3-2562-1.3			160	0.719		
Class B					Elbow to Pipe				
C05.011.318A	2NI76-2		CN-2NI-76	NDE-35	PT	SS	6.000		
	Circumferential	NI	CN-ISIN3-2562-1.3			160	0.719		
Class B					Elbow to Pipe				
C05.011.319	2NI76-3		CN-2NI-76	NDE-600	UT	SS	6.000	Component	Depending on the examiners qualifications, Procedure PDI-UT-2 may be used in lieu of NDE-600. If PDI-UT-2 is used, Calibration Block PDI-UT-2-C may be used.
	Circumferential	NI	CN-ISIN3-2562-1.3			160	0.719		
Class B					Pipe to Elbow				
C05.011.319A	2NI76-3		CN-2NI-76	NDE-35	PT	SS	6.000		
	Circumferential	NI	CN-ISIN3-2562-1.3			160	0.719		
Class B					Pipe to Elbow				
C05.011.320	2NI76-4		CN-2NI-76	NDE-600	UT	SS	6.000	Component	Depending on the examiners qualifications, Procedure PDI-UT-2 may be used in lieu of NDE-600. If PDI-UT-2 is used, Calibration Block PDI-UT-2-C may be used.
	Circumferential	NI	CN-ISIN3-2562-1.3			160	0.719		
Class B					Elbow to Pipe				
C05.011.320A	2NI76-4		CN-2NI-76	NDE-35	PT	SS	6.000		
	Circumferential	NI	CN-ISIN3-2562-1.3			160	0.719		
Class B					Elbow to Pipe				

CATEGORY C-F-1, Pressure Retaining Welds In Austenitic SS Or High Alloy Piping

Piping Welds > 1/5 in. Nom Wall for Piping >= NPS 2 and <= NPS 4

ITEM NUMBER	ID NUMBER	SYS	ISO/DWG NUMBERS	PROC	INSP REQ	MAT/SCH	DIA/THK	CAL BLOCKS	COMMENTS
C05.011.321	2NI76-5		CN-2NI-76	NDE-600	UT	SS	6.000	Component	Depending on the examiners qualifications, Procedure PDI-UT-2 may be used in lieu of NDE-600. If PDI-UT-2 is used, Calibration Block PDI-UT-2-C may be used.
	Circumferential	NI	CN-ISIN3-2562-1.3			160	0.719		
Class B					Pipe to Elbow				
C05.011.321A	2NI76-5		CN-2NI-76	NDE-35	PT	SS	6.000		
	Circumferential	NI	CN-ISIN3-2562-1.3			160	0.719		
Class B					Pipe to Elbow				
C05.011.349	2NI89-1		CN-2NI-89	NDE-600	UT	SS	6.000	Component	Depending on the examiners qualifications, Procedure PDI-UT-2 may be used in lieu of NDE-600. If PDI-UT-2 is used, Calibration Block PDI-UT-2-C may be used.
	Circumferential	NI	CN-ISIN3-2562-1.3			160	0.719		
Class B					Elbow to Pipe				
C05.011.349A	2NI89-1		CN-2NI-89	NDE-35	PT	SS	6.000		
	Circumferential	NI	CN-ISIN3-2562-1.3			160	0.719		
Class B					Elbow to Pipe				
C05.011.350	2NI89-4		CN-2NI-89	NDE-600	UT	SS	6.000	Component	Depending on the examiners qualifications, Procedure PDI-UT-2 may be used in lieu of NDE-600. If PDI-UT-2 is used, Calibration Block PDI-UT-2-C may be used.
	Circumferential	NI	CN-ISIN3-2562-1.3			160	0.719		
Class B					Pipe to Elbow				
C05.011.350A	2NI89-4		CN-2NI-89	NDE-35	PT	SS	6.000		
	Circumferential	NI	CN-ISIN3-2562-1.3			160	0.719		
Class B					Pipe to Elbow				
C05.011.351	2NI89-5		CN-2NI-89	NDE-600	UT	SS	6.000	Component	Depending on the examiners qualifications, Procedure PDI-UT-2 may be used in lieu of NDE-600. If PDI-UT-2 is used, Calibration Block PDI-UT-2-C may be used.
	Circumferential	NI	CN-ISIN3-2562-1.3			160	0.719		
Class B					Elbow to Pipe				
C05.011.351A	2NI89-5		CN-2NI-89	NDE-35	PT	SS	6.000		
	Circumferential	NI	CN-ISIN3-2562-1.3			160	0.719		
Class B					Elbow to Pipe				
C05.011.352	2NI89-6		CN-2NI-89	NDE-600	UT	SS	6.000	Component	Depending on the examiners qualifications, Procedure PDI-UT-2 may be used in lieu of NDE-600. If PDI-UT-2 is used, Calibration Block PDI-UT-2-C may be used.
	Circumferential	NI	CN-ISIN3-2562-1.3			160	0.719		
Class B					Pipe to Elbow				

CATEGORY C-F-1, Pressure Retaining Welds In Austenitic SS Or High Alloy Piping

Piping Welds > 1/5 in. Nom Wall for Piping >= NPS 2 and <= NPS 4

ITEM NUMBER	ID NUMBER	SYS	ISO/DWG NUMBERS	PROC	INSP REQ	MAT/SCH	DIA/THK	CAL BLOCKS	COMMENTS
C05.011.352A	2NI89-6		CN-2NI-89	NDE-35	PT	SS	6.000		
	Circumferential	NI	CN-ISIN3-2562-1.3			160	0.719		
Class B					Pipe to Elbow				
C05.011.353	2NI89-7		CN-2NI-89	NDE-600	UT	SS	6.000	Component	Depending on the examiners qualifications, Procedure PDI-UT-2 may be used in lieu of NDE-600. If PDI-UT-2 is used, Calibration Block PDI-UT-2-C may be used.
	Circumferential	NI	CN-ISIN3-2562-1.3			160	0.719		
Class B					Elbow to Pipe				
C05.011.353A	2NI89-7		CN-2NI-89	NDE-35	PT	SS	6.000		
	Circumferential	NI	CN-ISIN3-2562-1.3			160	0.719		
Class B					Elbow to Pipe				
C05.011.354	2NI89-10		CN-2NI-89	NDE-600	UT	SS	6.000	Component	Depending on the examiners qualifications, Procedure PDI-UT-2 may be used in lieu of NDE-600. If PDI-UT-2 is used, Calibration Block PDI-UT-2-C may be used.
	Circumferential	NI	CN-ISIN3-2562-1.3			160	0.719		
Class B					Pipe to Elbow				
C05.011.354A	2NI89-10		CN-2NI-89	NDE-35	PT	SS	6.000		
	Circumferential	NI	CN-ISIN3-2562-1.3			160	0.719		
Class B					Pipe to Elbow				
C05.011.355	2NI89-11		CN-2NI-89	NDE-600	UT	SS	6.000	Component	Depending on the examiners qualifications, Procedure PDI-UT-2 may be used in lieu of NDE-600. If PDI-UT-2 is used, Calibration Block PDI-UT-2-C may be used.
	Circumferential	NI	CN-ISIN3-2562-1.3			160	0.719		
Class B					Elbow to Pipe				
C05.011.355A	2NI89-11		CN-2NI-89	NDE-35	PT	SS	6.000		
	Circumferential	NI	CN-ISIN3-2562-1.3			160	0.719		
Class B					Elbow to Pipe				
C05.011.360	2NI76-6		CN-2NI-76	NDE-600	UT	SS	6.000	Component	Depending on the examiners qualifications, Procedure PDI-UT-2 may be used in lieu of NDE-600. If PDI-UT-2 is used, Calibration Block PDI-UT-2-C may be used.
	Circumferential	NI	CN-ISIN3-2562-1.3			160	0.719		
Class B					Elbow to Pipe				
C05.011.360A	2NI76-6		CN-2NI-76	NDE-35	PT	SS	6.000		
	Circumferential	NI	CN-ISIN3-2562-1.3			160	0.719		
Class B					Elbow to Pipe				

DUKE ENERGY CORPORATION
INSERVICE INSPECTION PLAN MANAGEMENT
Inservice Inspection Database Management System

Catawba 2

Inservice Inspection Plan for Interval 3 Outage 7

CATEGORY C-F-1, Pressure Retaining Welds in Austenitic SS Or High Alloy Piping

Piping Welds > 1/5 in. Nom Wall for Piping >= NPS 2 and <= NPS 4

ITEM NUMBER	ID NUMBER	SYS	ISO/DWG NUMBERS	PROC	INSP REQ	MAT/SCH	DIA/THK	CAL BLOCKS	COMMENTS

Total C05.011 Items: 44

CATEGORY C-F-1, Pressure Retaining Welds In Austenitic SS Or High Alloy Piping

Socket Welds

ITEM NUMBER	ID NUMBER	SYS	ISO/DWG NUMBERS	PROC	INSP REQ	MAT/SCH	DIA/THK	CAL BLOCKS	COMMENTS
C05.021.121 Class B	2NI303-1 Circumferential	NI	CN-2NI-303 CN-ISIN3-2562-1.3	NDE-600	UT Elbow to Pipe	SS 160	4.000 0.531	Component	Depending on the examiners qualifications, Procedure PDI-UT-2 may be used in lieu of NDE-600. If PDI-UT-2 is used, Calibration Block PDI-UT-2-C may be used.
C05.021.121A Class B	2NI303-1 Circumferential	NI	CN-2NI-303 CN-ISIN3-2562-1.3	NDE-35	PT Elbow to Pipe	SS 160	4.000 0.531		
C05.021.122 Class B	2NI303-10 Circumferential	NI	CN-2NI-303 CN-ISIN3-2562-1.3	NDE-600	UT Pipe to Elbow	SS 160	4.000 0.531	Component	Depending on the examiners qualifications, Procedure PDI-UT-2 may be used in lieu of NDE-600. If PDI-UT-2 is used, Calibration Block PDI-UT-2-C may be used.
C05.021.122A Class B	2NI303-10 Circumferential	NI	CN-2NI-303 CN-ISIN3-2562-1.3	NDE-35	PT Pipe to Elbow	SS 160	4.000 0.531		
C05.021.123 Class B	2NI303-13 Circumferential	NI	CN-2NI-303 CN-ISIN3-2562-1.3	NDE-600	UT Elbow to Pipe	SS 160	4.000 0.531	Component	Depending on the examiners qualifications, Procedure PDI-UT-2 may be used in lieu of NDE-600. If PDI-UT-2 is used, Calibration Block PDI-UT-2-C may be used.
C05.021.123A Class B	2NI303-13 Circumferential	NI	CN-2NI-303 CN-ISIN3-2562-1.3	NDE-35	PT Elbow to Pipe	SS 160	4.000 0.531		
C05.021.124 Class B	2NI303-14 Circumferential	NI	CN-2NI-303 CN-ISIN3-2562-1.3	NDE-600	UT Pipe to Elbow	SS 160	4.000 0.531	Component	Depending on the examiners qualifications, Procedure PDI-UT-2 may be used in lieu of NDE-600. If PDI-UT-2 is used, Calibration Block PDI-UT-2-C may be used.
C05.021.124A Class B	2NI303-14 Circumferential	NI	CN-2NI-303 CN-ISIN3-2562-1.3	NDE-35	PT Pipe to Elbow	SS 160	4.000 0.531		

CATEGORY C-F-1, Pressure Retaining Welds in Austenitic SS Or High Alloy Piping

Socket Welds

ITEM NUMBER	ID NUMBER	SYS	ISO/DWG NUMBERS	PROC	INSP REQ	MAT/SCH	DIA/THK	CAL BLOCKS	COMMENTS
C05.021.125	2NI309-10		CN-2NI-309	NDE-600	UT	SS	3.000	Component	Depending on the examiners qualifications, Procedure PDI-UT-2 may be used in lieu of NDE-600. If PDI-UT-2 is used, Calibration Block PDI-UT-2-C may be used.
	Circumferential	NI	CN-ISIN3-2562-1.0			160	0.438		
Class B					Tee to Pipe				
C05.021.125A	2NI309-10		CN-2NI-309	NDE-35	PT	SS	3.000		
	Circumferential	NI	CN-ISIN3-2562-1.0			160	0.438		
Class B					Tee to Pipe				
C05.021.126	2NI309-11		CN-2NI-309	NDE-600	UT	SS	3.000	Component	Depending on the examiners qualifications, Procedure PDI-UT-2 may be used in lieu of NDE-600. If PDI-UT-2 is used, Calibration Block PDI-UT-2-C may be used.
	Circumferential	NI	CN-ISIN3-2562-1.0			160	0.438		
Class B					Pipe to Elbow				
C05.021.126A	2NI309-11		CN-2NI-309	NDE-35	PT	SS	3.000		
	Circumferential	NI	CN-ISIN3-2562-1.0			160	0.438		
Class B					Pipe to Elbow				
C05.021.127	2NI369-19		CN-2NI-369	NDE-600	UT	SS	2.000	Component	Depending on the examiners qualifications, Procedure PDI-UT-2 may be used in lieu of NDE-600. If PDI-UT-2 is used, Calibration Block PDI-UT-2-C may be used.
	Circumferential	NI	CN-ISIN3-2562-1.2			160	0.344		
Class B					4X2 Reducer to Pipe				
C05.021.127A	2NI369-19		CN-2NI-369	NDE-35	PT	SS	2.000		
	Circumferential	NI	CN-ISIN3-2562-1.2			160	0.344		
Class B					4X2 Reducer to Pipe				
C05.021.128	2NI369-8		CN-2NI-369	NDE-600	UT	SS	2.000	Component	Depending on the examiners qualifications, Procedure PDI-UT-2 may be used in lieu of NDE-600. If PDI-UT-2 is used, Calibration Block PDI-UT-2-C may be used.
	Circumferential	NI	CN-ISIN3-2562-1.2			160	0.344		
Class B					Pipe to Orfice Flange				
C05.021.128A	2NI369-8		CN-2NI-369	NDE-35	PT	SS	2.000		
	Circumferential	NI	CN-ISIN3-2562-1.2			160	0.344		
Class B					Pipe to Orfice Flange				
C05.021.129	2NI68-1		CN-2NI-68	NDE-600	UT	SS	4.000	Component	Depending on the examiners qualifications, Procedure PDI-UT-2 may be used in lieu of NDE-600. If PDI-UT-2 is used, Calibration Block PDI-UT-2-C may be used.
	Circumferential	NI	CN-ISIN3-2562-1.3			160	0.531		
Class B					Tee to Elbow				

CATEGORY C-F-1, Pressure Retaining Welds In Austenitic SS Or High Alloy Piping

Socket Welds

ITEM NUMBER	ID NUMBER	SYS	ISO/DWG NUMBERS	PROC	INSP REQ	MAT/SCH	DIA/THK	CAL BLOCKS	COMMENTS
C05.021.129A	2NI68-1		CN-2NI-68	NDE-35	PT	SS	4.000		
	Circumferential	NI	CN-ISIN3-2562-1.3			160	0.531		
Class B					Tee to Elbow				
C05.021.130	2NI68-10		CN-2NI-68	NDE-600	UT	SS	4.000	Component	Depending on the examiners qualifications, Procedure PDI-UT-2 may be used in lieu of NDE-600. If PDI-UT-2 is used, Calibration Block PDI-UT-2-C may be used.
	Circumferential	NI	CN-ISIN3-2562-1.3			160	0.531		
Class B					Pipe to Elbow				
C05.021.130A	2NI68-10		CN-2NI-68	NDE-35	PT	SS	4.000		
	Circumferential	NI	CN-ISIN3-2562-1.3			160	0.531		
Class B					Pipe to Elbow				
C05.021.246	2NV50-16		CN-2NV-50	NDE-600	UT	SS	3.000	Component	Depending on the examiners qualifications, Procedure PDI-UT-2 may be used in lieu of NDE-600. If PDI-UT-2 is used, Calibration Block PDI-UT-2-C may be used.
	Circumferential	NV	CN-ISIN3-2554-1.7			40	0.216		
Class B					Pipe to Elbow				
C05.021.246A	2NV50-16		CN-2NV-50	NDE-35	PT	SS	3.000		
	Circumferential	NV	CN-ISIN3-2554-1.7			40	0.216		
Class B					Pipe to Elbow				
C05.021.250	2NV47-17		CN-2NV-47	NDE-600	UT	SS	3.000	Component	Depending on the examiners qualifications, Procedure PDI-UT-2 may be used in lieu of NDE-600. If PDI-UT-2 is used, Calibration Block PDI-UT-2-C may be used.
	Circumferential	NV	CN-ISIN3-2554-1.2			160	0.438		
Class B					Elbow to Pipe				
C05.021.250A	2NV47-17		CN-2NV-47	NDE-35	PT	SS	3.000		
	Circumferential	NV	CN-ISIN3-2554-1.2			160	0.438		
Class B					Elbow to Pipe				
C05.021.251	2NV47-18		CN-2NV-47	NDE-600	UT	SS	3.000	Component	Depending on the examiners qualifications, Procedure PDI-UT-2 may be used in lieu of NDE-600. If PDI-UT-2 is used, Calibration Block PDI-UT-2-C may be used.
	Circumferential	NV	CN-ISIN3-2554-1.2			160	0.438		
Class B					Pipe to Elbow				
C05.021.251A	2NV47-18		CN-2NV-47	NDE-35	PT	SS	3.000		
	Circumferential	NV	CN-ISIN3-2554-1.2			160	0.438		
Class B					Pipe to Elbow				

CATEGORY C-F-1, Pressure Retaining Welds in Austenitic SS Or High Alloy Piping

Socket Welds

ITEM NUMBER	ID NUMBER	SYS	ISO/DWG NUMBERS	PROC	INSP REQ	MAT/SCH	DIA/THK	CAL BLOCKS	COMMENTS
C05.021.252	2NV47-2		CN-2NV-47	NDE-600	UT	SS	3.000	Component	Depending on the examiners qualifications, Procedure PDI-UT-2 may be used in lieu of NDE-600. If PDI-UT-2 is used, Calibration Block PDI-UT-2-C may be used.
	Circumferential	NV	CN-ISIN3-2554-1.2			160	0.438		
Class B					Pipe to Elbow				
C05.021.252A	2NV47-2		CN-2NV-47	NDE-35	PT	SS	3.000		
	Circumferential	NV	CN-ISIN3-2554-1.2			160	0.438		
Class B					Pipe to Elbow				
C05.021.253	2NV47-20		CN-2NV-47	NDE-600	UT	SS	3.000	Component	Depending on the examiners qualifications, Procedure PDI-UT-2 may be used in lieu of NDE-600. If PDI-UT-2 is used, Calibration Block PDI-UT-2-C may be used.
	Circumferential	NV	CN-ISIN3-2554-1.2			160	0.438		
Class B					Pipe to Elbow				
C05.021.253A	2NV47-20		CN-2NV-47	NDE-35	PT	SS	3.000		
	Circumferential	NV	CN-ISIN3-2554-1.2			160	0.438		
Class B					Pipe to Elbow				
C05.021.254	2NV489-12		CN-2NV-489	NDE-600	UT	SS	4.000	Component	Depending on the examiners qualifications, Procedure PDI-UT-2 may be used in lieu of NDE-600. If PDI-UT-2 is used, Calibration Block PDI-UT-2-C may be used.
	Circumferential	NV	CN-ISIN3-2554-1.6			40	0.237		
Class B					Elbow to Pipe				
C05.021.254A	2NV489-12		CN-2NV-489	NDE-35	PT	SS	4.000		
	Circumferential	NV	CN-ISIN3-2554-1.6			40	0.237		
Class B					Elbow to Pipe				
C05.021.255	2NV489-13		CN-2NV-489	NDE-600	UT	SS	4.000	Component	Depending on the examiners qualifications, Procedure PDI-UT-2 may be used in lieu of NDE-600. If PDI-UT-2 is used, Calibration Block PDI-UT-2-C may be used.
	Circumferential	NV	CN-ISIN3-2554-1.6			40	0.237		
Class B					Pipe to Elbow				
C05.021.255A	2NV489-13		CN-2NV-489	NDE-35	PT	SS	4.000		
	Circumferential	NV	CN-ISIN3-2554-1.6			40	0.237		
Class B					Pipe to Elbow				
C05.021.256	2NV49-8		CN-2NV-49	NDE-600	UT	SS	3.000	Component	Depending on the examiners qualifications, Procedure PDI-UT-2 may be used in lieu of NDE-600. If PDI-UT-2 is used, Calibration Block PDI-UT-2-C may be used.
	Circumferential	NV	CN-ISIN3-2554-1.2			160	0.438		
Class B					Elbow to Pipe				

CATEGORY C-F-1, Pressure Retaining Welds In Austenitic SS Or High Alloy Piping

Socket Welds

ITEM NUMBER	ID NUMBER	SYS	ISO/DWG NUMBERS	PROC	INSP REQ	MAT/SCH	DIA/THK	CAL BLOCKS	COMMENTS
C05.021.256A	2NV49-8		CN-2NV-49	NDE-35	PT	SS	3.000		
	Circumferential	NV	CN-ISIN3-2554-1.2			160	0.438		
Class B					Elbow to Pipe				
C05.021.257	2NV49-9		CN-2NV-49	NDE-600	UT	SS	3.000	Component	Depending on the examiners qualifications, Procedure PDI-UT-2 may be used in lieu of NDE-600. If PDI-UT-2 is used, Calibration Block PDI-UT-2-C may be used.
	Circumferential	NV	CN-ISIN3-2554-1.2			160	0.438		
Class B					Pipe to Elbow				
C05.021.257A	2NV49-9		CN-2NV-49	NDE-35	PT	SS	3.000		
	Circumferential	NV	CN-ISIN3-2554-1.2			160	0.438		
Class B					Pipe to Elbow				
C05.021.258	2NV50-15		CN-2NV-50	NDE-600	UT	SS	3.000	Component	Depending on the examiners qualifications, Procedure PDI-UT-2 may be used in lieu of NDE-600. If PDI-UT-2 is used, Calibration Block PDI-UT-2-C may be used.
	Circumferential	NV	CN-ISIN3-2554-1.7			40	0.216		
Class B					Elbow to Pipe				
C05.021.258A	2NV50-15		CN-2NV-50	NDE-35	PT	SS	3.000		
	Circumferential	NV	CN-ISIN3-2554-1.7			40	0.216		
Class B					Elbow to Pipe				

Total C05.021 Items: 40

CATEGORY C-F-2, Pressure Retaining Welds In Carbon Or Low Alloy Steel Piping

Piping Welds > 1/5 in. Nom Wall for Piping >= NPS 2 and <= NPS 4

ITEM NUMBER	ID NUMBER	SYS	ISO/DWG NUMBERS	PROC	INSP REQ	MAT/SCH	DIA/THK	CAL BLOCKS	COMMENTS
C05.051.009 Class B	2CA93-1 Circumferential Term end	CA	CN-2CA-93 CN-ISIN3-2592-1.1	NDE-600	UT Elbow to Nozzle	CS 80	6.000 0.432	Component	Steam Generator 2C. Depending on the examiners qualifications, Procedure PDI-UT-1 may be used in lieu of NDE-600. If PDI-UT-1 is used, Calibration Block PDI-UT-1-C may be used.
C05.051.009A Class B	2CA93-1 Circumferential Term end	CA	CN-2CA-93 CN-ISIN3-2592-1.1	NDE-25	MT Elbow to Nozzle	CS 80	6.000 0.432		Steam Generator 2C.
C05.051.011 Class B	2CA97-1 Circumferential Term end	CA	CN-2CA-97 CN-ISIN3-2592-1.1	NDE-600	UT Elbow to Nozzle	CS 80	6.000 0.432	Component	Steam Generator 2A. Depending on the examiners qualifications, Procedure PDI-UT-1 may be used in lieu of NDE-600. If PDI-UT-1 is used, Calibration Block PDI-UT-1-C may be used.
C05.051.011A Class B	2CA97-1 Circumferential Term end	CA	CN-2CA-97 CN-ISIN3-2592-1.1	NDE-25	MT Elbow to Nozzle	CS 80	6.000 0.432		Steam Generator 2A.
C05.051.103 Class B	2SM12-4 Circumferential	SM	CN-2SM-12 CN-ISIN3-2593-1.0	NDE-600	UT Pipe to Elbow	CS	34.000 1.375	Component	Depending on the examiners qualifications, Procedure PDI-UT-1 may be used in lieu of NDE-600. If PDI-UT-1 is used, Calibration Block PDI-UT-1-C may be used.
C05.051.103A Class B	2SM12-4 Circumferential	SM	CN-2SM-12 CN-ISIN3-2593-1.0	NDE-25	MT Pipe to Elbow	CS	34.000 1.375		
C05.051.110 Class B	2SM-8A-B Circumferential	SM	CN-2SM-57 CN-ISIN3-2593-1.0	NDE-600	UT Outlet to Transition Piece	CS	10.000 1.500	Component	Depending on the examiners qualifications, Procedure PDI-UT-1 may be used in lieu of NDE-600. If PDI-UT-1 is used, Calibration Block PDI-UT-1-C may be used.
C05.051.110A Class B	2SM-8A-B Circumferential	SM	CN-2SM-57 CN-ISIN3-2593-1.0	NDE-25	MT Outlet to Transition Piece	CS	10.000 1.500		

CATEGORY C-F-2, Pressure Retaining Welds In Carbon Or Low Alloy Steel Piping

Piping Welds > 1/5 in. Nom Wall for Piping >= NPS 2 and <= NPS 4

ITEM NUMBER	ID NUMBER	SYS	ISO/DWG NUMBERS	PROC	INSP REQ	MAT/SCH	DIA/THK	CAL BLOCKS	COMMENTS
C05.051.111	2SM-8A-F		CN-2SM-57	NDE-600	UT	CS	10.000	Component	Depending on the examiners qualifications, Procedure PDI-UT-1 may be used in lieu of NDE-600. If PDI-UT-1 is used, Calibration Block PDI-UT-1-C may be used.
	Circumferential	SM	CN-ISIN3-2593-1.0				1.500		
Class B					Outlet to Transition Piece				
C05.051.111A	2SM-8A-F		CN-2SM-57	NDE-25	MT	CS	10.000		
	Circumferential	SM	CN-ISIN3-2593-1.0				1.500		
Class B					Outlet to Transition Piece				
C05.051.153	2SV19-3		CN-2SV-19	NDE-600	UT	CS	9.000	Component	Depending on the examiners qualifications, Procedure PDI-UT-1 may be used in lieu of NDE-600. If PDI-UT-1 is used, Calibration Block PDI-UT-1-C may be used.
	Circumferential	SV	CN-ISIN3-2593-1.0			40	1.500		
Class B					Pipe to Valve 2SV004				
C05.051.153A	2SV19-3		CN-2SV-19	NDE-25	MT	CS	9.000		
	Circumferential	SV	CN-ISIN3-2593-1.0			40	1.500		
Class B					Pipe to Valve 2SV004				

Total C05.051 Items: 12

CATEGORY C-F-2, Pressure Retaining Welds in Carbon Or Low Alloy Steel Piping

Pumps

ITEM NUMBER	ID NUMBER	SYS	ISO/DWG NUMBERS	PROC	INSP REQ	MAT/SCH	DIA/THK	CAL BLOCKS	COMMENTS
****** Pump Casing Welds ******									
C05.081.011	2SM-5A-C		CN-2SM-059	NDE-25	MT	CS	6.000		Grinnell Piece Mark CW-SM-5A Weld C.
	Branch	SM	CN-ISIN3-2593-1.0				0.432		
Class B					Pipe Main Header to Sweepolet				

Total C05.081 Items:	**1**
Total C05 Items:	**97**

CATEGORY C-G, Pressure Retaining Welds In Pumps And Valves

Pressure Vessels

ITEM NUMBER	ID NUMBER	SYS	ISO/DWG NUMBERS	PROC	INSP REQ	MAT/SCH	DIA/THK	CAL BLOCKS	COMMENTS
****** Welded Attachments ******									
C06.020.017	2SA-1		CNM 1205.00-117	NDE-25	MT	CS	6.000		Valve Body Weld - Valve Numbers in Valve Group 2SA-1, 2SA-4.
	Circumferential	SA	CN-ISIN3-2593-1.1				1.164		
Class B					Valve Body to Bonnet				
C06.020.019	2SV-10		CNM 1205.09-02	NDE-35	PT	SS-CS	9.000		Valve Body Weld - Valve Numbers in Valve Group 2SV-8, 2SV-9, 2SV-10, 2SV-11, 2SV-12.
	Circumferential	SV	CN-ISIN3-2593-1.0				1.500		
Class B					Weld 1AD VAlve Inlet Neck to Base				
C06.020.020	2SV-14		CNM 1205.09-02	NDE-35	PT	SS-CS	9.000		Valve Body Weld - Valve Numbers in Valve Group 2SV-14, 2SV-15, 2SV-16, 2SV-17, 2SV-18.
	Circumferential	SV	CN-ISIN3-2593-1.0				1.500		
Class B					Weld 1AD Valve Inlet Neck to Base				
C06.020.021	2SV-20		CNM 1205.09-02	NDE-35	PT	SS-CS	9.000		Valve Body Weld - Valve Numbers in Valve Group 2SV-20, 2SV-21, 2SV-22, 2SV-23, 2SV-24.
	Circumferential	SV	CN-ISIN3-2593-1.0				1.500		
Class B					Weld 1AD Valve Inlet Neck to Base				

Total C06.020 Items: 4

Total C06 Items: 4

CATEGORY D-A, Welded Attachments For Vessels, Piping, Pumps, And Valves

Piping

ITEM NUMBER	ID NUMBER	SYS	ISO/DWG NUMBERS	PROC	INSP REQ	MAT/SCH	DIA/THK	CAL BLOCKS	COMMENTS
****** Welded Attachments ******									
D01.010.001	2RNSB-SUPPORT		CNM 1218.02-10	QAL-13	VT-1	CS	0.000		Nuclear Service Water Strainer 2B.
	Rigid Support	RN	CN-ISIN3-1574-1.0				0.500		
Class C					Support Plate to Strainer				

Total D01.010 Items: 1

CATEGORY D-A, Welded Attachments For Vessels, Piping, Pumps, And Valves

Pumps

ITEM NUMBER	ID NUMBER	SYS	ISO/DWG NUMBERS	PROC	INSP REQ	MAT/SCH	DIA/THK	CAL BLOCKS	COMMENTS
****** Welded Attachments ******									
D01.020.001	2-R-CA-0178		CN-2492-CA056	QAL-13	VT-1	NA	8.000		Inspect with F01.031.004.
	Rigid Support	CA	CN-ISIN3-2592-1.0				0.500		
Class C									
D01.020.022	2-R-RN-0226		CN-2493-RN001	QAL-13	VT-1	NA	10.000		Inspect with F01.031.153.
	Rigid Support	RN	CN-ISIN3-2574-2.5				0.750		
Class C									

Total D01.020 Items: 2

CATEGORY D-A, Welded Attachments For Vessels, Piping, Pumps, And Valves

Valves

ITEM NUMBER	ID NUMBER	SYS	ISO/DWG NUMBERS	PROC	INSP REQ	MAT/SCH	DIA/THK	CAL BLOCKS	COMMENTS
****** Welded Attachments ******									
D01.030.001	2RNPB-SUPPORT		CNM 1201.05-122	QAL-13	VT-1	NA	0.000		Nuclear Service Water Pump 2B.
	Rigid Support	RN	CN-ISIN3-1574-1.0				0.500		
Class C					Stiffners to Pump Casing				

Total D01.030 Items: 1

Total D01 Items: 4

CATEGORY F-A, Supports

Class 1 Piping Supports

Catawba 2
Inservice Inspection Plan for Interval 3 Outage 7

ITEM NUMBER	ID NUMBER	SYS	ISO/DWG NUMBERS	PROC	INSP REQ	MAT/SCH	DIA/THK	CAL BLOCKS	COMMENTS
****** Category A, One-Directional ******									
F01.010.003	2-R-NC-2002		CN-2491-NC009	QAL-14	VT-3	NA	2.000		
	Rigid Support	NC	CN-ISIN3-2553-1.0				0.000		
Class A									
F01.010.004	2-R-NC-2005		CN-2491-NC009	QAL-14	VT-3	NA	2.000		
	Rigid Support	NC	CN-ISIN3-2553-1.0				0.000		
Class A									
F01.010.007	2-R-NC-1501		CN-2491-NC0160	QAL-14	VT-3	NA	14.000		
	Rigid Support	NC	CN-ISIN3-2553-1.0				0.000		
Class A									
Total F01.010 Items:	**3**								
****** Category C, Thermal Movement ******									
F01.012.013	2-R-NC-1693		CN-2491-NC099	QAL-14	VT-3	NA	6.000		
	Mech Snubber	NC	CN-ISIN3-2553-1.1				0.000		
Class A									
Total F01.012 Items:	**1**								

CATEGORY F-A, Supports

Class 2 Piping Supports

ITEM NUMBER	ID NUMBER	SYS	ISO/DWG NUMBERS	PROC	INSP REQ	MAT/SCH	DIA/THK	CAL BLOCKS	COMMENTS
**** Category A, One-Directional ****									
F01.020.039	2-R-ND-0140		CN-2492-ND031	QAL-14	VT-3	NA	12.000		
	Rigid Support	ND	CN-ISIN3-2561-1.1				0.000		
Class B									
F01.020.040	2-R-ND-0141		CN-2492-ND031	QAL-14	VT-3	NA	12.000		
	Rigid Support	ND	CN-ISIN3-2561-1.1				0.000		
Class B									
F01.020.041	2-R-ND-0246		CN-2492-ND031	QAL-14	VT-3	NA	12.000		
	Rigid Support	ND	CN-ISIN3-2561-1.1				0.000		
Class B									
F01.020.042	2-R-ND-0247		CN-2492-ND032	QAL-14	VT-3	NA	8.000		
	Rigid Support	ND	CN-ISIN3-2561-1.1				0.000		
Class B									
F01.020.043	2-R-ND-0248		CN-2492-ND032	QAL-14	VT-3	NA	8.000		
	Rigid Support	ND	CN-ISIN3-2561-1.1				0.000		
Class B									
F01.020.044	2-R-ND-0318		CN-2492-ND032	QAL-14	VT-3	NA	8.000		
	Rigid Support	ND	CN-ISIN3-2561-1.1				0.000		
Class B									
F01.020.074	2-R-NI-0040		CN-2492-NI017	QAL-14	VT-3	NA	4.000		
	Rigid Support	NI	CN-ISIN3-2562-1.2				0.000		
Class B									
F01.020.075	2-R-NI-0045		CN-2492-NI017	QAL-14	VT-3	NA	4.000		
	Rigid Support	NI	CN-ISIN3-2562-1.2				0.000		
Class B									

CATEGORY F-A, Supports

Class 2 Piping Supports

ITEM NUMBER	ID NUMBER	SYS	ISO/DWG NUMBERS	PROC	INSP REQ	MAT/SCH	DIA/THK	CAL BLOCKS	COMMENTS
F01.020.076	2-R-NI-0047		CN-2492-NI017	QAL-14	VT-3	NA	4.000		
	Rigid Support	NI	CN-ISIN3-2562-1.2				0.000		
Class B									
F01.020.077	2-R-NI-0048		CN-2492-NI017	QAL-14	VT-3	NA	4.000		
	Rigid Support	NI	CN-ISIN3-2562-1.2				0.000		
Class B									
F01.020.106	2-R-NS-1016		CN-2491-NS016	QAL-14	VT-3	NA	8.000		
	Rigid Support	NS	CN-ISIN3-2563-1.0				0.000		
Class B									
F01.020.107	2-R-NS-1018		CN-2491-NS016	QAL-14	VT-3	NA	8.000		
	Rigid Support	NS	CN-ISIN3-2563-1.0				0.000		
Class B									
F01.020.108	2-R-NS-1019		CN-2491-NS016	QAL-14	VT-3	NA	8.000		
	Rigid Support	NS	CN-ISIN3-2563-1.0				0.000		
Class B									
F01.020.162	2-R-NV-0006		CN-2492-NV068	QAL-14	VT-3	NA	4.000		
	Rigid Support	NV	CN-ISIN3-2554-1.7				0.000		
Class B									
F01.020.163	2-R-NV-0007		CN-2492-NV068	QAL-14	VT-3	NA	4.000		
	Rigid Support	NV	CN-ISIN3-2554-1.7				0.000		
Class B									
F01.020.164	2-R-NV-0252		CN-2492-NV070	QAL-14	VT-3	NA	3.000		
	Rigid Support	NV	CN-ISIN3-2554-1.2				0.000		
Class B									
F01.020.165	2-R-NV-0254		CN-2492-NV070	QAL-14	VT-3	NA	3.000		
	Rigid Support	NV	CN-ISIN3-2554-1.2				0.000		
Class B									

CATEGORY F-A, Supports

Class 2 Piping Supports

ITEM NUMBER	ID NUMBER	SYS	ISO/DWG NUMBERS	PROC	INSP REQ	MAT/SCH	DIA/THK	CAL BLOCKS	COMMENTS
F01.020.166	2-R-NV-0255		CN-2492-NV070	QAL-14	VT-3	NA	3.000		
	Rigid Support	NV	CN-ISIN3-2554-1.2				0.000		
Class B									
F01.020.223	2-R-SV-1589		CN-2491-SV008	QAL-14	VT-3	NA	6.000		
	Rigid Support	SV	CN-ISIN3-2593-1.0				0.000		
Class B									
F01.020.224	2-R-SV-1591		CN-2491-SV008	QAL-14	VT-3	NA	6.000		
	Rigid Support	SV	CN-ISIN3-2593-1.0				0.000		
Class B									
F01.020.225	2-R-SV-1573		CN-2491-SV005	QAL-14	VT-3	NA	6.000		
	Rigid Support	SV	CN-ISIN3-2593-1.0				1.000		
Class B									
F01.020.226	2-R-SV-1574		CN-2491-SV005	QAL-14	VT-3	NA	6.000		
	Rigid Support	SV	CN-ISIN3-2593-1.0				1.000		
Class B									

Total F01.020 Items: 22

****** Category B, Multi-Directional ******

F01.021.035	2-R-ND-0322		CN-2492-ND026	QAL-14	VT-3	NA	8.000		
	Rigid Restraint	ND	CN-ISIN3-2561-1.1				0.000		
Class B									
F01.021.078	2-R-NI-1783		CN-2491-NI090	QAL-14	VT-3	NA	4.000		
	Rigid Restraint	NI	CN-ISIN3-2562-1.2				0.000		
Class B									
F01.021.079	2-R-NI-1785		CN-2491-NI090	QAL-14	VT-3	NA	4.000		
	Rigid Restraint	NI	CN-ISIN3-2562-1.2				0.000		
Class B									

CATEGORY F-A, Supports

Class 2 Piping Supports

ITEM NUMBER	ID NUMBER	SYS	ISO/DWG NUMBERS	PROC	INSP REQ	MAT/SCH	DIA/THK	CAL BLOCKS	COMMENTS
F01.021.080	2-R-NI-1786		CN-2491-NI090	QAL-14	VT-3	NA	4.000		
	Rigid Restraint	NI	CN-ISIN3-2562-1.2				0.000		
Class B									
F01.021.104	2-R-NS-0063		CN-2492-NS013	QAL-14	VT-3	NA	10.000		
	Rigid Restraint	NS	CN-ISIN3-2563-1.0				0.000		
Class B									
F01.021.105	2-R-NS-0068		CN-2492-NS013	QAL-14	VT-3	NA	10.000		
	Rigid Restraint	NS	CN-ISIN3-2563-1.0				0.000		
Class B									
F01.021.162	2-R-NV-0251		CN-2492-NV070	QAL-14	VT-3	NA	3.000		
	Rigid Restraint	NV	CN-ISIN3-2554-1.2				0.000		
Class B									
F01.021.163	2-R-NV-0253		CN-2492-NV070	QAL-14	VT-3	NA	3.000		
	Rigid Restraint	NV	CN-ISIN3-2554-1.2				0.000		
Class B									
F01.021.164	2-R-NV-0289		CN-2492-NV072	QAL-14	VT-3	NA	8.000		
	Rigid Restraint	NV	CN-ISIN3-2554-1.7				0.000		
Class B									
F01.021.165	2-R-NV-0290		CN-2492-NV072	QAL-14	VT-3	NA	8.000		
	Rigid Restraint	NV	CN-ISIN3-2554-1.7				0.000		
Class B									

Total F01.021 Items: 10

CATEGORY F-A, Supports

Class 3 Piping Supports

ITEM NUMBER	ID NUMBER	SYS	ISO/DWG NUMBERS	PROC	INSP REQ	MAT/SCH	DIA/THK	CAL BLOCKS	COMMENTS
****** Category A, One-Directional ******									
F01.030.072	2-R-KC-0313		CN-2492-KC090	QAL-14	VT-3	NA	6.000		
	Rigid Support	KC	CN-ISIN3-2573-1.1				0.625		
Class C									
F01.030.122	2-R-LD-0016		CN-2493-LD030	QAL-14	VT-3	NA	6.000		
	Rigid Support	LD	CN-ISIN3-2609-2.0				0.000		
Class C									
Total F01.030 Items:	**2**								
****** Category B, Multi-Directional ******									
F01.031.004	2-R-CA-0178		CN-2492-CA056	QAL-14	VT-3	NA	8.000		Inspect with D01.020.001.
	Rigid Restraint	CA	CN-ISIN3-2592-1.0				0.500		
Class C									
F01.031.057	2-R-KC-0252		CN-2492-KC101	QAL-14	VT-3	NA	8.000		
	Rigid Restraint	KC	CN-ISIN3-2573-1.0				0.000		
Class C									
F01.031.058	2-R-KC-0253		CN-2492-KC101	QAL-14	VT-3	NA	8.000		
	Rigid Restraint	KC	CN-ISIN3-2573-1.0				0.000		
Class C									
F01.031.059	2-R-KC-0347		CN-2492-KC110	QAL-14	VT-3	NA	6.000		
	Rigid Restraint	KC	CN-ISIN3-2573-1.1				0.000		
Class C									
F01.031.060	2-R-KC-0218		CN-2492-KC117	QAL-14	VT-3	NA	14.000		
	Rigid Restraint	KC	CN-ISIN3-2573-1.2				0.000		
Class C									
F01.031.061	2-R-KC-0219		CN-2492-KC117	QAL-14	VT-3	NA	14.000		
	Rigid Restraint	KC	CN-ISIN3-2573-1.2				0.000		
Class C									

CATEGORY F-A, Supports

Class 3 Piping Supports

ITEM NUMBER	ID NUMBER	SYS	ISO/DWG NUMBERS	PROC	INSP REQ	MAT/SCH	DIA/THK	CAL BLOCKS	COMMENTS
F01.031.062	2-R-KC-0221		CN-2492-KC117	QAL-14	VT-3	NA	14.000		
	Rigid Restraint	KC	CN-ISIN3-2573-1.2				0.000		
Class C									
F01.031.153	2-R-RN-0226		CN-2493-RN001	QAL-14	VT-3	NA	10.000		Inspect with D01.020.022.
	Rigid Restraint	RN	CN-ISIN3-2574-2.5				0.750		
Class C									
F01.031.154	2-R-RN-0239		CN-2493-RN029	QAL-14	VT-3	NA	10.000		
	Rigid Restraint	RN	CN-ISIN3-2574-2.1				0.750		
Class C					. to				

Total F01.031 items: 9

****** Category C, Thermal Movement ******

F01.032.104	2-R-KD-0033		CN-2493-KD048	QAL-14	VT-3	NA	8.000		
	Mech Snubber	KD	CN-ISIN3-2609-1.0				0.000		
Class C									
F01.032.105	2-R-KD-0007		CN-2493-KD052	QAL-14	VT-3	NA	6.000		
	Spring Hgr	KD	CN-ISIN3-2609-1.0				0.000		
Class C									
F01.032.153	2-R-RN-0037		CN-2492-RN139	QAL-14	VT-3	NA	6.000		
	Mech Snubber	RN	CN-ISIN3-2574-2.0				0.000		
Class C									

Total F01.032 Items: 3

CATEGORY F-A, Supports

Supports Other Than Piping Supports

ITEM NUMBER	ID NUMBER	SYS	ISO/DWG NUMBERS	PROC	INSP REQ	MAT/SCH	DIA/THK	CAL BLOCKS	COMMENTS
**** Class 1, 2, and 3 ****									
F01.040.101	2SGA-SUPPORT		CN-1070-30	QAL-14	VT-3	NA	0.000		Steam Generator 2A Upper Lateral Support And Snubbers.
	Rigid Support	NC	CN-ISIN3-2553-1.0				0.000		
Class B									
F01.040.103	2REGHX-SUPPORT		CNM 1201.06-31	QAL-14	VT-3	NA	0.000		Regenerative Heat Exchanger Support (6 Brackets).
	Rigid Support	NV	CN-ISIN3-2554-1.0				0.000		
Class B									
F01.040.108	2SWRF-SUPPORT		CNM 1201.04-078	QAL-14	VT-3	NA	6.000		Seal Water Return Filter Support and Legs.
	Rigid Support	NV	CN-ISIN3-2554-1.6				0.250		
Class B									
F01.040.109	2CCPA-SUPPORT		CNM 1201.05-144	QAL-14	VT-3	NA	0.000		Centrifugal Charging Pump 2A Support.
	Rigid Support	NV	CN-ISIN3-2554-1.7				0.000		
Class B									
F01.040.215	2RNPB-SUPPORT		CNM 1201.05-122	QAL-14	VT-3	NA	0.000		Nuclear Service Water Pump 2A Support.
	Rigid Support	RN	CN-ISIN3-1574-1.0				0.500		
Class C									
F01.040.216	2RNSB-SUPPORT		CNM 1218.02-10	QAL-14	VT-3	NA	0.000		Nuclear Service Water Strainer 2B Support.
	Rigid Support	RN	CN-ISIN3-1574-1.2				0.500		
Class C									

Total F01.040 Items: 6

Total F01 Items: 56

ITEM NUMBER	ID NUMBER	SYS	ISO/DWG NUMBERS	PROC	INSP REQ	MAT/SCH	DIA/THK	CAL BLOCKS	COMMENTS
G06.001.001 Class A	2PZR-W4ASE Circumferential Term end Dissimilar	NC	CNM 2201.01-110/1 CNM 2201.01-110/2	QAL-15	VT-2	SS-CS	6.000 0.960		Pressurizer Safety Nozzle Safe End X-Y Quadrant. Bare Metal Visual Examination by VT-2 qualified inspector around 100% of penetration. (For responsibile individual, contact J. M. Shuping, Alloy 600 Engineer Nuclear Technical Services). Reference NRC Bulletin 2004-01). Reference Item Number G08.001.003.
G06.001.002 Class A	2PZR-W4BSE Circumferential Term end Dissimilar	NC	CNM 2201.01-110/1 CNM 2201.01-110/2	QAL-15	VT-2 Nozzle to Safe End	SS-CS	6.000 0.960		Pressurizer Safety Nozzle To Safe End. W-X Quadrant. Bare Metal Visual Examination by VT-2 qualified inspector around 100% of penetration. (For responsibile individual, contact J. M. Shuping, Alloy 600 Engineer Nuclear Technical Services). Reference NRC Bulletin 2004-01). Reference Item Number G08.001.004.
G06.001.003 Class A	2PZR-W4CSE Circumferential Term end Dissimilar	NC	CNM 2201.01-110/1 CNM 2201.01-110/2	QAL-15	VT-2 Nozzle to Safe End	SS-CS	6.000 0.960		Pressurizer Relief Nozzle To Safe End. W-Z Quadrant. Bare Metal Visual Examination by VT-2 qualified inspector around 100% of penetration. (For responsibile individual, contact J. M. Shuping, Alloy 600 Engineer Nuclear Technical Services). Reference NRC Bulletin 2004-01) . Reference Item Number G08.001.005.
G06.001.004 Class A	2PZR-W3SE Circumferential Term end Dissimilar	NC	CNM 2201.01-110/1 CNM 2201.01-110/2	QAL-15	VT-2 Nozzle to Safe End	SS-CS	6.000 0.960		Pressurizer Safety Nozzle To Safe End. Y-Z Quadrant. Bare Metal Visual Examination by VT-2 qualified inspector around 100% of penetration. (For responsibile individual, contact J. M. Shuping, Alloy 600 Engineer Nuclear Technical Services). Reference NRC Bulletin 2004-01) . Reference Item Number G08.001.002.
G06.001.005 Class A	2PZR-W1SE Circumferential Term end Dissimilar	NC	CNM 2201.01-110/1 CNM 2201.01-110/2	QAL-15	VT-2 Nozzle to Safe End	SS-CS	14.000 1.640		Pressurizer Surge Nozzle To Safe End. Bare Metal Visual Examination by VT-2 qualified inspector around 100% of penetration. (For responsibile individual, contact J. M. Shuping, Alloy 600 Engineer Nuclear Technical Services). Reference NRC Bulletin 2004-01) .

ITEM NUMBER	ID NUMBER	SYS	ISO/DWG NUMBERS	PROC	INSP REQ	MAT/SCH	DIA/THK	CAL BLOCKS	COMMENTS
									Reference Item Number G08.001.001.
G06.001.006 Class A	2PZR-W2SE Circumferential Term end Dissimilar	NC	CNM 2201.01-110/1 CNM 2201.01-110/2	QAL-15	VT-2 Nozzle to Safe End	SS-CS	4.000 0.760		Pressurizer Spray Nozzle To Safe End. Bare Metal Visual Examination by VT-2 qualified inspector around 100% of penetration. (For responsibile individual, contact J. M. Shuping, Alloy 600 Engineer Nuclear Technical Services). Reference NRC Bulletin 2004-01). Reference Item Number G08.001.006.
Total G06.001 Items:	**6**								
G06.002.001 Class A	2PZR-MANWAY	NC	CNM 2201.01-110/1 CNM 2201.01-110/2	QAL-15	VT-2	NA	0.000 0.000		Pressurizer Manway Diaphram Seal Weld. Bare Metal Visual Examination by VT-2 qualified inspector. Examine the gap between the Pressurizer Manway Cover and Manway for evidence of diaphram plate seal weld leakage. (For responsibile individual, contact J. M. Shuping, Alloy 600 Engineer Nuclear Technical Services). Reference NRC Bulletin 2004-01)
Total G06.002 Items:	**1**								
Total G06 Items:	**7**								

ITEM NUMBER	ID NUMBER	SYS	ISO/DWG NUMBERS	PROC	INSP REQ	MAT/SCH	DIA/THK	CAL BLOCKS	COMMENTS
G08.001.001 Class A	2PZR-W1SE Circumferential Term end Dissimilar	NC	CNM 2201.01-110/1 CNM 2201.01-110/2	QAL-15	VT-2 Nozzle to Safe End	SS-CS	14.000 1.640		Pressurizer Surge Nozzle To Safe End. Bare Metal Visual Examination by VT-2 qualified inspector per requirements of MRP-139. (For responsible individual, contact J. M. Shuping, Alloy 600 Engineer Nuclear Technical Services). Reference Item Number G06.001.005.
G08.001.002 Class A	2PZR-W3SE Circumferential Term end Dissimilar	NC	CNM 2201.01-110/1 CNM 2201.01-110/2	QAL-15	VT-2 Nozzle to Safe End	SS-CS	6.000 0.960		Pressurizer Safety Nozzle To Safe End. Y-Z Quadrant. Bare Metal Visual Examination by VT-2 qualified inspector per requirements of MRP-139. (For responsible individual, contact J. M. Shuping, Alloy 600 Engineer Nuclear Technical Services). Reference Item Number G06.001.004.
G08.001.003 Class A	2PZR-W4ASE Circumferential Term end Dissimilar	NC	CNM 2201.01-110/1 CNM 2201.01-110/2	QAL-15	VT-2 Nozzle to Safe End	SS-CS	6.000 0.960		Pressurizer Safety Nozzle To Safe End. X-Y Quadrant. Bare Metal Visual Examination by VT-2 qualified inspector per requirements of MRP-139. (For responsible individual, contact J. M. Shuping, Alloy 600 Engineer Nuclear Technical Services). Reference Item Number G06.001.001.
G08.001.004 Class A	2PZR-W4BSE Circumferential Term end Dissimilar	NC	CNM 2201.01-110/1 CNM 2201.01-110/2	QAL-15	VT-2 Nozzle to Safe End	SS-CS	6.000 0.960		Pressurizer Safety Nozzle To Safe End. W-X Quadrant. Bare Metal Visual Examination by VT-2 qualified inspector per requirements of MRP-139. (For responsible individual, contact J. M. Shuping, Alloy 600 Engineer Nuclear Technical Services). Reference Item Number G06.001.002.
G08.001.005 Class A	2PZR-W4CSE Circumferential Term end Dissimilar	NC	CNM 2201.01-110/1 CNM 2201.01-110/2	QAL-15	VT-2 Nozzle to Safe End	SS-CS	6.000 0.960		Pressurizer Relief Nozzle To Safe End. W-Z Quadrant. Bare Metal Visual Examination by VT-2 qualified inspector per requirements of MRP-139. (For responsible individual, contact J. M. Shuping, Alloy 600 Engineer Nuclear Technical Services). Reference Item Number G06.001.003.

ITEM NUMBER	ID NUMBER	SYS	ISO/DWG NUMBERS	PROC	INSP REQ	MAT/SCH	DIA/THK	CAL BLOCKS	COMMENTS
G08.001.006	2PZR-W2SE		CNM 2201.01-110/1	QAL-15	VT-2	SS-CS	4.000		Pressurizer Spray Nozzle To Safe End.
	Circumferential	NC	CNM 2201.01-110/2				0.760		Bare Metal Visual Examination by VT-2 qualified
Class A	Term end				Nozzle to				inspector per requirements of MRP-139. (For
	Dissimilar				Safe End				responsible individual, contact J. M. Shuping, Alloy 600 Engineer Nuclear Technical Services). Reference Item Number G06.001.006.
Total G08.001 Items:	**6**								
G08.002.001	2RPV202-121ASE		E 8871-171-009	QAL-15	VT-2	SS-CS	29.000		RV Outlet Nozzle To Safe End At 158 Degrees
	Circumferential	NC	CNM 2201.01-74/5				2.625		(Loop A). Reactor Building Coordinate is 22
Class A	Term end		CNM 2201.01-0205		Nozzle to				Degrees. To Be Done With B09.011.001.
	Dissimilar				Safe End				Bare Metal Visual Examination by VT-2 qualified inspector per requirements of MRP-139. (For responsible individual, contact J. M. Shuping, Alloy 600 Engineer Nuclear Technical Services). Note: This weld location is also required to be UT inspected per ASME Section XI, Item Number B05.010.006 Outage 7 (EOC20).
G08.002.002	2RPV-202-121BSE		E 8871-171-009	QAL-15	VT-2	SS-CS	29.000		RV Outlet Nozzle To Safe End At 22 Degrees (Loop
	Circumferential	NC	CNM 2201.01-74/5				2.625		B). Reactor Building Coordinate is 158 Degrees.
Class A	Term end		CNM 2201.01-0205		Nozzle to				To Be Done With B09.011.005.
	Dissimilar				Safe End				Bare Metal Visual Examination by VT-2 qualified inspector per requirements of MRP-139. (For responsible individual, contact J. M. Shuping, Alloy 600 Engineer Nuclear Technical Services). Note: This weld location is also required to be UT inspected per ASME Section XI, Item Number B05.010.005 Outage 7 (EOC20).
G08.002.003	2RPV-202-121CSE		E 8871-171-009	QAL-15	VT-2	SS-CS	29.000		RV Outlet Nozzle To Safe End At 338 Degrees
	Circumferential	NC	CNM 2201.01-74/5				2.625		(Loop C). Reactor Building Coordinate is 202
Class A	Term end		CNM 2201.01-0205		Nozzle to				Degrees. To Be Done With B09.011.009.
	Dissimilar				Safe End				Bare Metal Visual Examination by VT-2 qualified inspector per requirements of MRP-139. (For responsible individual, contact J. M. Shuping, Alloy 600 Engineer Nuclear Technical Services). Note: This weld location is also required to be UT inspected per ASME Section XI, Item Number B05.010.008 Outage 7 (EOC20).

CATEGORY AUG, Augmented Inspections

ITEM NUMBER	ID NUMBER	SYS	ISO/DWG NUMBERS	PROC	INSP REQ	MAT/SCH	DIA/THK	CAL BLOCKS	COMMENTS
G08.002.004	2RPV-202-121DSE		E 8871-171-009	QAL-15	VT-2	SS-CS	29.000		RV Outlet Nozzle To Safe End At 202 Degrees (Loop D). Reactor Building Coordinate is 338 Degrees. To Be Done With B09.011.013. Bare Metal Visual Examination by VT-2 qualified inspector per requirements of MRP-139. (For responsible individual, contact J. M. Shuping, Alloy 600 Engineer Nuclear Technical Services). Note: This weld location is also required to be UT inspected per ASME Section XI, Item Number B05.010.001 Outage 7 (EOC20).
	Circumferential	NC	CNM 2201.01-74/5				2.625		
Class A	Term end		CNM 2201.01-0205		Nozzle to Safe End				
	Dissimilar								

Total G08.002 Items:	**4**
Total G08 Items:	**10**

ITEM NUMBER	ID NUMBER	SYS	ISO/DWG NUMBERS	PROC	INSP REQ	MAT/SCH	DIA/THK	CAL BLOCKS	COMMENTS
**** ELC ****									
H01.001.001 Class A	2NI55-8 Circumferential	NI	CN-2NI-55 CN-ISIN3-2562-1.1	NDE-600	UT Pipe to Tee	SS 160	6.000 0.719	Component	This weld examined under Item Number B09.011.077 in Outage 1(EOC8), and meets the intent of this Elective Examination. This Elective Examination was added to the ISI Database per Engineering Examination Request # ER-CNS-99-01. Depending on the examiner's qualifications, Procedure PDI-UT-2 may be used in lieu of NDE-600. If PDI-UT-2 is used, Calibration Block PDI-UT-2-C may be used.
H01.001.002 Class A	2NI55-9 Circumferential	NI	CN-2NI-55 CN-ISIN3-2562-1.1	NDE-600	UT Tee to Valve 2NI082	SS 140	10.000 1.000	Component	This Elective Examination was added to the ISI Database per Engineering Examination Request # ER-CNS-99-01. Depending on the examiner's qualifications, Procedure PDI-UT-2 may be used in lieu of NDE-600. If PDI-UT-2 is used, Calibration Block PDI-UT-2-C may be used.
H01.001.003 Class A	2NI55-10 Circumferential	NI	CN-2NI-55 CN-ISIN3-2562-1.1	NDE-600	UT Tee to Valve 2NI081	SS 140	10.000 1.000	Component	This Elective Examination was added to the ISI Database per Engineering Examination Request # ER-CNS-99-01. Depending on the examiner's qualifications, Procedure PDI-UT-2 may be used in lieu of NDE-600. If PDI-UT-2 is used, Calibration Block PDI-UT-2-C may be used.
H01.001.004 Class A	2NI183-12 Circumferential	NI	CN-2NI-183 CN-ISIN3-2562-1.1	NDE-600	UT Pipe to Tee	SS 160	6.000 0.719	Component	This Elective Examination was added to the ISI Database per Engineering Examination Request # ER-CNS-99-01. Depending on the examiner's qualifications, Procedure PDI-UT-2 may be used in lieu of NDE-600. If PDI-UT-2 is used, Calibration Block PDI-UT-2-C may be used.
H01.001.005 Class A	2NI183-12L Longitudinal	NI	CN-2NI-183 CN-ISIN3-2562-1.1	NDE-600	UT Pipe to Tee	SS 160	6.000 0.719	Component	The examination includes at least a pipe diameter length but no more than 12 inches of longitudinal weld intersecting the circumferential weld in reducing T, located near circumferential weld #12. This Elective Examination was added to the ISI Database per Engineering Examination Request # ER-CNS-99-01. Depending on the examiner's qualifications, Procedure PDI-UT-2 may be used in lieu of NDE-600. If PDI-UT-2 is used, Calibration Block PDI-UT-2-C may be used.

ITEM NUMBER	ID NUMBER	SYS	ISO/DWG NUMBERS	PROC	INSP REQ	MAT/SCH	DIA/THK	CAL BLOCKS	COMMENTS
H01.001.006	2NI183-17		CN-2NI-183	NDE-600	UT	SS	10.000	Component	This Elective Examination was added to the ISI Database per Engineering Examination Request # ER-CNS-99-01. Depending on the examiner's qualifications, Procedure PDI-UT-2 may be used in lieu of NDE-600. If PDI-UT-2 is used, Calibration Block PDI-UT-2-C may be used.
	Circumferential	NI	CN-ISIN3-2562-1.1			140	1.000		
Class A					Valve 2NI093 to Tee				
H01.001.007	2NI183-17L		CN-2NI-183	NDE-600	UT	SS	10.000	Component	The examination includes at least a pipe diameter length but no more than 12 inches of longitudinal weld intersecting the circumferential weld in reducing T, located near circumferential weld #17. This Elective Examination was added to the ISI Database per Engineering Examination Request # ER-CNS-99-01. Depending on the examiner's qualifications, Procedure PDI-UT-2 may be used in lieu of NDE-600. If PDI-UT-2 is used, Calibration Block PDI-UT-2-C may be used.
	Longitudinal	NI	CN-ISIN3-2562-1.1			140	1.000		
Class A					Valve 2NI093 to Tee				
H01.001.008	2NI183-18		CN-2NI-183	NDE-600	UT	SS	10.000	Component	This Elective Examination was added to the ISI Database per Engineering Examination Request # ER-CNS-99-01. Depending on the examiner's qualifications, Procedure PDI-UT-2 may be used in lieu of NDE-600. If PDI-UT-2 is used, Calibration Block PDI-UT-2-C may be used.
	Circumferential	NI	CN-ISIN3-2562-1.1			140	1.000		
Class A					Tee to Valve 2NI094				
H01.001.009	2NI183-18L		CN-2NI-183	NDE-600	UT	SS	10.000	Component	The examination includes at least a pipe diameter length but no more than 12 inches of longitudinal weld intersecting the circumferential weld in reducing T, located near circumferential weld #18. This Elective Examination was added to the ISI Database per Engineering Examination Request # ER-CNS-99-01. Depending on the examiner's qualifications, Procedure PDI-UT-2 may be used in lieu of NDE-600. If PDI-UT-2 is used, Calibration Block PDI-UT-2-C may be used.
	Longitudinal	NI	CN-ISIN3-2562-1.1			140	1.000		
Class A					Tee to Valve 2NI094				
H01.001.010	2NI184-12		CN-2NI-184	NDE-600	UT	SS	10.000	Component	This Elective Examination was added to the ISI Database per Engineering Examination Request # ER-CNS-99-01. Depending on the examiner's qualifications, Procedure PDI-UT-2 may be used in lieu of NDE-600. If PDI-UT-2 is used, Calibration Block PDI-UT-2-C may be used.
	Circumferential	NI	CN-ISIN3-2562-1.1			140	1.000		
Class A					Valve 2NI059 to Tee				

ITEM NUMBER	ID NUMBER	SYS	ISO/DWG NUMBERS	PROC	INSP REQ	MAT/SCH	DIA/THK	CAL BLOCKS	COMMENTS
H01.001.011	2NI184-13		CN-2NI-184	NDE-600	UT	SS	10.000	Component	This Elective Examination was added to the ISI Database per Engineering Examination Request # ER-CNS-99-01. Depending on the examiner's qualifications, Procedure PDI-UT-2 may be used in lieu of NDE-600. If PDI-UT-2 is used, Calibration Block PDI-UT-2-C may be used.
	Circumferential	NI	CN-ISIN3-2562-1.1			140	1.000		
Class A					Tee to Pipe				
H01.001.012	2NI184-14		CN-2NI-184	NDE-600	UT	SS	6.000	Component	This Elective Examination was added to the ISI Database per Engineering Examination Request # ER-CNS-99-01. Depending on the examiner's qualifications, Procedure PDI-UT-2 may be used in lieu of NDE-600. If PDI-UT-2 is used, Calibration Block PDI-UT-2-C may be used.
	Circumferential	NI	CN-ISIN3-2562-1.1			160	0.719		
Class A					Tee to Pipe				
H01.001.013	2NI185-9		CN-2NI-185	NDE-600	UT	SS	10.000	Component	This Elective Examination was added to the ISI Database per Engineering Examination Request # ER-CNS-99-01. Depending on the examiner's qualifications, Procedure PDI-UT-2 may be used in lieu of NDE-600. If PDI-UT-2 is used, Calibration Block PDI-UT-2-C may be used.
	Circumferential	NI	CN-ISIN3-2562-1.1			140	1.000		
Class A					Valve 2NI070 to Tee				
H01.001.014	2NI185-9L		CN-2NI-185	NDE-600	UT	SS	10.000	Component	The examination includes at least a pipe diameter length but no more than 12 inches of longitudinal weld intersecting the circumferential weld in reducing T, located near circumferential weld #9. This Elective Examination was added to the ISI Database per Engineering Examination Request # ER-CNS-99-01. Depending on the examiner's qualifications, Procedure PDI-UT-2 may be used in lieu of NDE-600. If PDI-UT-2 is used, Calibration Block PDI-UT-2-C may be used.
	Longitudinal	NI	CN-ISIN3-2562-1.1			140	1.000		
Class A					Valve 2NI070 to Tee				
H01.001.015	2NI185-10		CN-2NI-185	NDE-600	UT	SS	10.000	Component	This Elective Examination was added to the ISI Database per Engineering Examination Request # ER-CNS-99-01. Depending on the examiner's qualifications, Procedure PDI-UT-2 may be used in lieu of NDE-600. If PDI-UT-2 is used, Calibration Block PDI-UT-2-C may be used.
	Circumferential	NI	CN-ISIN3-2562-1.1			140	1.000		
Class A					Tee to Valve 2NI071				
H01.001.016	2NI185-10L		CN-2NI-185	NDE-600	UT	SS	10.000	Component	The examination includes at least a pipe diameter length but no more than 12 inches of longitudinal weld intersecting the circumferential weld in reducing T, located near circumferential weld #10.
	Longitudinal	NI	CN-ISIN3-2562-1.1			140	1.000		
Class A					Tee to Valve 2NI071				

ITEM NUMBER	ID NUMBER	SYS	ISO/DWG NUMBERS	PROC	INSP REQ	MAT/SCH	DIA/THK	CAL BLOCKS	COMMENTS
									This Elective Examination was added to the ISI Database per Engineering Examination Request # ER-CNS-99-01. Depending on the examiner's qualifications, Procedure PDI-UT-2 may be used in lieu of NDE-600. If PDI-UT-2 is used, Calibration Block PDI-UT-2-C may be used.
H01.001.017	2NI185-11		CN-2NI-185	NDE-600	UT	SS	6.000	Component	This Elective Examination was added to the ISI Database per Engineering Examination Request # ER-CNS-99-01. Depending on the examiner's qualifications, Procedure PDI-UT-2 may be used in lieu of NDE-600. If PDI-UT-2 is used, Calibration Block PDI-UT-2-C may be used.
	Circumferential	NI	CN-ISIN3-2562-1.1			160	0.719		
Class A					Tee to Pipe				
H01.001.018	2NI185-11L		CN-2NI-185	NDE-600	UT	SS	6.000	Component	The examination includes at least a pipe diameter length but no more than 12 inches of longitudinal weld intersecting the circumferential weld in reducing T, located near circumferential weld #11. This Elective Examination was added to the ISI Database per Engineering Examination Request # ER-CNS-99-01. Depending on the examiner's qualifications, Procedure PDI-UT-2 may be used in lieu of NDE-600. If PDI-UT-2 is used, Calibration Block PDI-UT-2-C may be used.
	Longitudinal	NI	CN-ISIN3-2562-1.1			160	0.719		
Class A					Tee to Pipe				

Total H01.001 Items: 18

Total H01 Items: 18

Catawba Unit 2

Inservice Inspection Reference Drawings

Section 2

Revision 0

ISI NDE Boundary Drawings – Catawba Unit 2

The following is a list of ISI NDE Boundary Drawings used as a reference for Catawba Unit 2 for the Third Interval Inservice Inspection Plan. These drawings are color-coded in accordance with Section 2.0 of the General Requirements.

These ISI NDE Boundary Drawings are stored electronically and can be found in the Nuclear Electronic Document Library (NEDL). ISI NDE Boundary Drawings are revised in accordance with Procedure QA-513, Appendix A, (QA-513 is located in the ASME Section XI Program Functional Area Manual).

System	Drawing No.	Revision[1]	Class 1	Class 2	Class 3
Reactor Coolant System (NC)	CN-ISIN3-2553-1.0	0	X	X	
Reactor Coolant System (NC)	CN-ISIN3-2553-1.1	0	X	X	X
Reactor Coolant System (NC)	CN-ISIN3-2553-1.2	0		X	
Reactor Coolant System (NC)	CN-ISIN3-2553-1.3	0		X	
Chemical and Volume Control System (NV)	CN-ISIN3-2554-1.0	0	X	X	
Chemical and Volume Control System (NV)	CN-ISIN3-2554-1.1	0		X	X
Chemical and Volume Control System (NV)	CN-ISIN3-2554-1.2	0		X	X
Chemical and Volume Control System (NV)	CN-ISIN3-2554-1.3	0		X	X
Chemical and Volume Control System (NV)	CN-ISIN3-2554-1.4	0			X
Chemical and Volume Control System (NV)	CN-ISIN3-2554-1.5	0	X	X	

System	Drawing No.	Revision[1]	Class 1	Class 2	Class 3
Chemical and Volume Control System (NV)	CN-ISIN3-2554-1.6	0		X	X
Chemical and Volume Control System (NV)	CN-ISIN3-2554-1.7	0		X	X
Chemical and Volume Control System (NV)	CN-ISIN3-2554-1.8	0		X	
Boron Thermal Regeneration System (NR)	CN-ISIN3-2555-1.1			X	
Boron Recycle System (NB)	CN-ISIN3-2556-2.0	0		X	
Containment Air Return Exchange & Hydrogen Skimmer System (VX)	CN-ISIN3-2557-1.0	0		X	
ICE Condenser Refrigeration System (NF)	CN-ISIN3-2558-2.0	0		X	
Containment Hydrogen Sample& Purge System (VY)	CN-ISIN3-2559-1.0	0		X	
Residual Heat Removal System (ND)	CN-ISIN3-2561-1.0	0	X	X	
Residual Heat Removal System (ND)	CN-ISIN3-2561-1.1	0	X	X	
Safety Injection System (NI)	CN-ISIN3-2562-1.0	0	X	X	
Safety Injection System (NI)	CN-ISIN3-2562-1.1	0	X	X	
Safety Injection System (NI)	CN-ISIN3-2562-1.2	0	X	X	
Safety Injection System (NI)	CN-ISIN3-2562-1.3	0	X	X	
Containment Spray System (NS)	CN-ISIN3-2563-1.0	0		X	
Annulus Ventilation System (VE)	CN-ISIN3-2564-1.0	0			X
Liquid Wastes System (WL)	CN-ISIN3-2565-2.0	0		X	X
Liquid Wastes System (WL)	CN-ISIN3-2565-2.1	0		X	
Liquid Wastes System (WL)	CN-ISIN3-2565-2.2	0			X
Liquid Wastes System (WL)	CN-ISIN3-2565-2.4	0		X	
Liquid Wastes System (WL)	CN-ISIN3-2565-2.6	0		X	
Equipment Contamination System (WE)	CN-ISIN3-2568-1.0	0		X	X
Containment Valve Injection Water System (NW)	CN-ISIN3-2569-1.0	0		X	X

System	Drawing No.	Revision[1]	Class 1	Class 2	Class 3
Spent Fuel Cooling System (KF)	CN-ISIN3-2570-1.0	0		X	X
Spent Fuel Cooling System (KF)	CN-ISIN3-2570-1.1	0			X
Refueling Water System (FW)	CN-ISIN3-2571-1.0	0		X	
Nuclear Sampling System (NM)	CN-ISIN3-2572-1.0	0		X	
Nuclear Sampling System (NM)	CN-ISIN3-2572-1.1	0		X	
Nuclear Sampling System (NM)	CN-ISIN3-2572-1.2	0		X	
Nuclear Sampling System (NM)	CN-ISIN3-2572-1.4	0		X	
Component Cooling System (KC)	CN-ISIN3-2573-1.0	0			X
Component Cooling System (KC)	CN-ISIN3-2573-1.1	0			X
Component Cooling System (KC)	CN-ISIN3-2573-1.2	0			X
Component Cooling System (KC)	CN-ISIN3-2573-1.3	0		X	X
Component Cooling System (KC)	CN-ISIN3-2573-1.4	0		X	X
Component Cooling System (KC)	CN-ISIN3-2573-1.5	0		X	X
Component Cooling System (KC)	CN-ISIN3-2573-1.7	0		X	X
Component Cooling System (KC)	CN-ISIN3-2573-2.0	0			X
Component Cooling System (KC)	CN-ISIN3-2573-2.1	0			X
Component Cooling System (KC)	CN-ISIN3-2573-2.2	0			X
Component Cooling System (KC)	CN-ISIN3-2573-2.3	0			X
Nuclear Service Water System (RN)	CN-ISIN3-2574-2.0	0			X
Nuclear Service Water System (RN)	CN-ISIN3-2574-2.1	0			X
Nuclear Service Water System (RN)	CN-ISIN3-2574-2.2	0		X	
Nuclear Service Water System (RN)	CN-ISIN3-2574-2.4	0			X
Nuclear Service Water System (RN)	CN-ISIN3-2574-2.5	0			X
Nuclear Service Water System (RN)	CN-ISIN3-2574-2.7	0		X	

System	Drawing No.	Revision[1]	Class 1	Class 2	Class 3
Containment Purge System (VP)	CN-ISIN3-2576-1.0	0		X	
Fuel Handling Area Ventilation System (VA)	CN-ISIN3-2577-2.0	0			X
Steam Generator BlowDown System (BB)	CN-ISIN3-2580-1.0	0		X	
Steam Generator Wet LayUp Recirculation System (BW)	CN-ISIN3-2584-1.0			X	
Containment Air Release And Addition System (VQ)	CN-ISIN3-2585-1.0			X	
Feedwater System (CF)	CN-ISIN3-2591-1.1	0		X	X
Auxiliary Feedwater System (CA)	CN-ISIN3-2592-1.0	0			X
Auxiliary Feedwater System (CA)	CN-ISIN3-2592-1.1	0		X	X
Auxiliary Feedwater System (CA)	CN-ISIN3-2592-1.2	0			X
Main Steam System (SV) , Main Steam Vent to Atmosphere System (SV)	CN-ISIN3-2593-1.0	0		X	
Main Steam to Auxiliary Equipment System (SA) Main Steam By-Pass to Condenser System (SB)	CN-ISIN3-2593-1.1	0		X	X
Steam Supply to FDWP Turbine System (SP) FDWP Turbine Exhaust System (TE)	CN-ISIN3-2593-1.2	0			X
Main Steam System (SM)	CN-ISIN3-2593-1.7	0		X	
Instrument Air System (VI)	CN-ISIN3-2605-1.5	0		X	
Breathing Air System (VB)	CN-ISIN3-2605-3.2	0		X	
Diesel Generator Engine Cooling Water System (KD)	CN-ISIN3-2609-1.0	0			X
Diesel Generator Engine Lube Oil System (LD)	CN-ISIN3-2609-2.0	0			X
Diesel Generator Engine Lube Oil System (LD)	CN-ISIN3-2609-2.2	0			X

System	Drawing No.	Revision[1]	Class 1	Class 2	Class 3
Diesel Generator Engine Fuel Oil System (FD)	CN-ISIN3-2609-3.0	0			X
Diesel Generator Engine Fuel Oil System (FD)	CN-ISIN3-2609-3.1	0			X
Diesel Generator Engine Starting Air System (VG)	CN-ISIN3-2609-4.0	0			X
Diesel Generator Engine Starting Air System (VG)	CN-ISIN3-2609-4.1	0			X
Diesel Generator Engine Air Intake & Exhaust System (VN)	CN-ISIN3-2609-5.0	0			X
Diesel Generator Engine Crank Case Vacum System (ZD)	CN-ISIN3-2609-6.0	0			X
Diesel Generator Engine Room Sump Pump System (WN)	CN-ISIN3-2609-7.0	0			X

[1] The ISI NDE Boundary Drawings revision number provides a baseline for the development of the ISI Plan. As such, the revision numbers listed will not be updated as each ISI NDE Boundary Drawings is revised.

Attachment 2

Inservice Inspection Pressure Test Plan

Duke Energy Corporation
Catawba Nuclear Station
Unit 2

THIRD INSPECTION INTERVAL INSERVICE INSPECTION PRESSURE TEST PLAN

Revision 0

Plant Location: 4800 Concord Road
York, South Carolina 29745

Commercial Service Date: August 19, 1986

Third Interval Start Date: 10/15/2005

Owner: Duke Power Company
526 South Church St.
Mail Code EC05A
Charlotte, N. C. 28201-1006

Start Date: 10/15/2005 — End Date: 08/19/2016

1st Period (10/15/2005 – 10/15/2008)	2nd Period (10/15/2008 – 10/15/2012)	3rd Period (10/15/2012 – 08/19/2016)
Refueling Outage 1 (EOC 14)	Refueling Outage 3 (EOC 16)	Refueling Outage 6 (EOC 19)
Refueling Outage 2 (EOC 15)	Refueling Outage 4 (EOC 17)	Refueling Outage7 (EOC 20)
	Refueling Outage 5 (EOC 18)	

Prepared By: Jim Boughman Date 2/7/06

Reviewed By: R. G. Hidson Date 2/7/06

Approved By: R. Kevin Rhyne Date 2/7/06

ANII Review: Robert McFall Date 2-21-06

J.M. Boughman
(704) 382-5112
jmboughm@duke-energy.com

TABLE OF CONTENTS

SECTION	TITLE
1	Applicable Codes and Standards for Inservice Inspection Pressure Testing
2	Inspection Methods and Procedures to be Used for Inservice Inspection Pressure Testing
3	Description of Inservice Inspection Pressure Testing Plan for Class A Items
4	Description of Inservice Inspection Pressure Testing Plan for Class B Items
5	Description of Inservice Inspection Pressure Testing Plan for Class C Items
6	System Boundaries Subject to Examination
7	Components Exempt From Pressure Test Examination
8	Description of Examination Schedules
9	Requests for Relief From ASME Code Requirements
10	Examination Zone Listing & Associated Boundary Drawings
11	System, Boundary Drawing, and ISI Classification Listing

1	Applicable Codes and Standards for Inservice Inspection Pressure Testing

This document constitutes the inservice inspection pressure testing plan and schedules for the third inspection interval for Catawba Unit 2. All pressure retaining components classified as Class A, B, and C have been reviewed to determine the inservice inspection pressure test examination requirements.

Unless otherwise specified, all inservice inspection pressure testing activities for Catawba Unit 2 shall be performed in accordance with Program B of the 1998 Edition of ASME Section XI, through the 2000 Addenda (hereafter referred to as the code).

The NRC revised the pressure and temperature hold time requirements in Title 10, Code of Federal Regulations, Part 50.55a (b)(2)(xx), published January 1, 2003. When performing system leakage tests in accordance with IWA-5213(a), a 10-minute hold time after attaining test pressure is required for Class B and Class C components that are not in use during normal operating conditions, and no hold time is required for the remaining Class B and Class C components provided that the system has been in operation for at least 4 hours for insulated components or 10 minutes for uninsulated components.

Class C system pressure testing for Catawba Unit 2 shall be performed in accordance with Table IWD-2500-1, Category D-B, of the 2001 Edition of ASME Section XI as permitted by RIS 2004-12 letter submitted to the NRC on 1/31/2006. This particular Table from the 2001 Edition corrected the mistake of requiring two Class C pressure tests be performed during each period.

The following Nuclear Code Cases provide a suitable alternative and may be used for the Pressure Testing Program at Catawba Unit 2:

Case No.	Case Title	NRC Conditions for Use of Case
N-533-1	Alternative Requirements for VT-2 Visual Examination of Class 1, 2, and 3 Insulated Pressure-Retaining Bolted Connections	Prior to conducting the VT-2 examination of Class 2 and Class 3 components not required to operate during normal plant operation, a 10 minute holding time is required after attaining test pressure. Prior to conducting the VT-2 examination of Class 2 and Class 3 components required to operate during normal plant operation, no holding time is required, provided the system has been in operation for at least 4 hours for insulated components or 10 minutes for non-insulated components.
N-566-2	Corrective Action for Leakage Identified at Bolted Connections	Unconditional
N-616	Alternative Requirements for VT-2 Visual Examination of Classes 1, 2, 3 Insulated Pressure Retaining Bolted Connections	(1) Insulation must be removed for VT-2 examination during the system pressure test for any 17-4 Precipitation Hardening stainless steel stud or bolt aged at a temperature below 1100°F, or 410 stainless steel stud or bolt aged at a temperature below 1100°F or with hardness above R_c30. (2) For A-286 stainless steel studs or bolts, the preload must be verified to be below 100 Ksi or the thermal insulation must be removed and the joint visually examined. (3) Prior to conducting the VT-2 examination of

		Class 2 and Class 3 components not required to operate during normal plant operation, a 10 minute holding time is required after attaining test pressure. Prior to conducting the VT-2 examination of Class 2 and Class 3 components required to operate during normal plant operation, no holding time is required, provided the system has been in operation for at least 4 hours for insulated components or 10 minutes for non-insulated components.

2	**Inspection Methods and Procedures to be Used for Inservice Inspection Pressure Testing**

VT-2 visual examinations shall be conducted to locate evidence of leakage from pressure retaining components during the conduct of a system pressure test.

Pressure testing and associated VT-2 visual examinations shall be performed using the latest revision of procedure QAL-15 "Inservice Inspection (ISI) Visual Examination, VT-2, Pressure Test".

The following Duke Energy procedures and directives shall be used to control pressure testing inservice inspection activities, Inservice Inspection Pressure Testing Plans, Pressure Test Database Management System, and Inservice Inspection Pressure Test Reports:

Procedure No:	Title:
NSD-300	ASME Section XI Program
NSD-701	Records Management
NSD-702	Document Management
NSD-800	Software and Data Quality Assurance (SDQA) Program
QA-520	Preparation and Distribution of Inservice Inspection Reports
QA-522	Preparation and Implementation of the Inservice Inspection Pressure Testing Plans
QA-524	ISI Pressure Testing Process
QAL-5	Control Of Preservice And Inservice Inspection Activities
QAL-15	Inservice Inspection (ISI) Visual Examination, VT-2, Pressure Test

3	Description of Inservice Inspection Pressure Testing Plan for Class A Items

Pressure testing of Class A items shall be performed in accordance with the requirements of Articles IWA-5000, IWB-2000, and IWB-5000 of the code. Class A systems that are required to be pressure tested shall be divided into isolable areas (to the extent practical). These areas represent specific pressure testing zones (hereafter referred to as examination zones).

Examination Categories and Requirements:

The examination categories and item numbers shall be those listed in Table IWB-2500-1 of the code. Each examination zone may include various code categories and item numbers.

Category B-P, All Pressure Retaining Components

The Class A System Leakage Test (IWB-5220) is conducted at a pressure not less than the pressure corresponding to 100% rated reactor power. The test pressure and temperature shall be attained at a rate in accordance with the heat-up limitations specified for the system. The Class A System Leakage Test is required prior to plant startup following each reactor refueling.

The pressure-retaining boundary during the Class A System Leakage Test conducted at or near the end of each inspection interval shall extend to all Class A pressure-retaining components within the system boundary. This test is required only once during a ten-year interval.

Table IWB-2500-1 Item	Component To Be Examined
	Reactor Vessel
B15.10	Pressure Retaining Boundary
	Pressurizer
B15.20	Pressure Retaining Boundary
	Steam Generators
B15.30	Pressure Retaining Boundary
	Heat Exchangers
B15.40	Pressure Retaining Boundary
	Piping
B15.50	Pressure Retaining Boundary
	Pumps
B15.60	Pressure Retaining Boundary
	Valves
B15.70	Pressure Retaining Boundary

4	Description of Inservice Inspection Pressure Testing Plan for Class B Items

Pressure testing of Class B items shall be performed in accordance with the requirements of Articles IWA-5000, IWC-2000, and IWC-5000 of the code. Class B systems that are required to be pressure tested shall be divided into isolable areas (to the extent practical). These areas represent specific examination zones.

Examination Categories and Requirements:

The examination categories and item numbers shall be those listed in Table IWC-2500-1 of the code. Each examination zone may include various code categories and item numbers.

Category C-B, Pressure Retaining Nozzle Welds In Vessels

When nozzle-to-shell (nozzle to head or nozzle to nozzle) welds (to be examined by NDE methods) are inaccessible, the telltale hole in the reinforcing plates shall receive a VT-2 visual examination for evidence of leakage while the vessel is undergoing the System Leakage Test as required by Category C-H. The Class B leakage test is required once in each inspection period.

Table IWC-2500-1 Item	Component To Be Examined
C2.30	Nozzles With Reinforcing Plate in Vessels > 1/2 in. Nominal Thickness
C2.33	Nozzle-to-Shell (Nozzle to Head or Nozzle to Nozzle) Welds When Inside of Vessel is Inaccessible

Category C-H, All Pressure Retaining Components

The Class B System Leakage Test (IWC-5220) is conducted at the system pressure obtained while the system, or portion of the system, is in service performing its normal operating function or at the system pressure developed during a test conducted to verify system operability. The Class B leakage test is required once in each inspection period.

Table IWC-2500-1 Item	Component To Be Examined
C7.10	Pressure Retaining Components

5	Description of Inservice Inspection Pressure Testing Plan for Class C Items

Pressure testing of Class C items shall be performed in accordance with the requirements of Articles IWA-5000, IWD-2000, and IWD-5000 of the code. Class C systems that are required to be pressure tested shall be divided into isolable areas (to the extent practical). These areas represent specific examination zones.

Examination Categories and Requirements:

The examination categories and item numbers shall be those listed in Table IWD-2500-1 (2001 Edition) of the code. Each examination zone may include various code categories and item numbers.

Category D-B, All Pressure Retaining Components

The Class C System Leakage Test (IWD-5221) is conducted at the system pressure obtained while the system, or portion of the system, is in service performing its normal operating function or at the system pressure developed during a test conducted to verify system operability. The Class C leakage test is required once in each inspection period.

IWD-2500-1 Item	Component to be Examined	Comments
D2.10	Pressure Retaining Components	Use Table IWD-2500-1 from the 2001 Edition of Section XI.

6	System Boundaries Subject to Examination

Unless otherwise noted, systems designated as Class A are equivalent to ASME Class 1, those designated as Class B are equivalent to ASME Class 2, and those designated as Class C are equivalent to ASME Class 3.

The following color codes, shown on electronic pressure testing boundary drawings, are used to represent the boundaries subject to pressure testing:

Red	=	Class A
Yellow	=	Class B
Green	=	Class C
Blue	=	Components exempt from pressure testing requirements
Magenta	=	Boundary line showing the extremities of pressure testing examination zones
Black	=	Non ASME Class components

All instrumentation taps within the examination boundary shall be examined up to the first isolation valve off the process pipe.

7	Components Exempt From Pressure Test Examination

Boundary drawings that are exclusively for showing pressure testing exemptions are listed in Section 11 of this document. The following are examples of pressure test exemptions:

- Non pressure retaining portion of Reactor Coolant Pumps.
- Open ended portions of Class B and Class C discharge piping (this does not apply to repair/replacement activities related to pressure testing).
- Class B and Class C portions of systems that do not support the system safety function beyond the first normally closed valve (including relief valves or valves capable of automatic closure).
- Containment penetrations where the piping and isolation valves perform a containment function and the balance of the piping system is outside the scope of Section XI.
- Systems/components determined by the Nuclear Assurance division as optionally owner classified Class B or Class C per IWA-1320(e) of the code.

8	Description of Examination Schedules

All system pressure testing is completed in accordance with the schedule shown in the code tables for each examination category. The examination periods are derived from "Program B" of the code.

The Class A System Leakage Test zone shall be completed each refueling outage. The Class A System Leakage Test zone requirements are not scheduled on an outage-by-outage basis given that the examinations are required to be completed for each refueling outage.

The Class B and Class C System Leakage Test zones shall be examined once during each inspection period. The Class B and Class C System Leakage Test zones are not scheduled on an outage-by-outage basis given that they are required to be 100 percent complete by the end of the inspection period rather than a minimum/maximum percentage each inspection period.

9	Requests for Relief from ASME Code Requirements

Each Request for Relief from a requirement of the code shall be submitted by the Nuclear Generation Department to the Nuclear Regulatory Commission for approval.

At the writing of this plan, there are no circumstances that require a relief request for the Pressure Testing Program at Catawba Unit 2.

10	Examination Zone Listing & Associated Boundary Drawings

The Examination Zones, shown on electronic pressure testing boundary drawings, represent an area of a system that shall receive a VT-2 visual examination. An Examination Zone terminates at a boundary valve, building interface, or component interface and may include components shown on several boundary drawings. The Examination Zone includes all pressure retaining components within the scope of the boundary valves/extremity interfaces.

All Catawba Unit 2 Examination Zone numbers have the same format. The following example is for an Class A System Leakage Test zone:

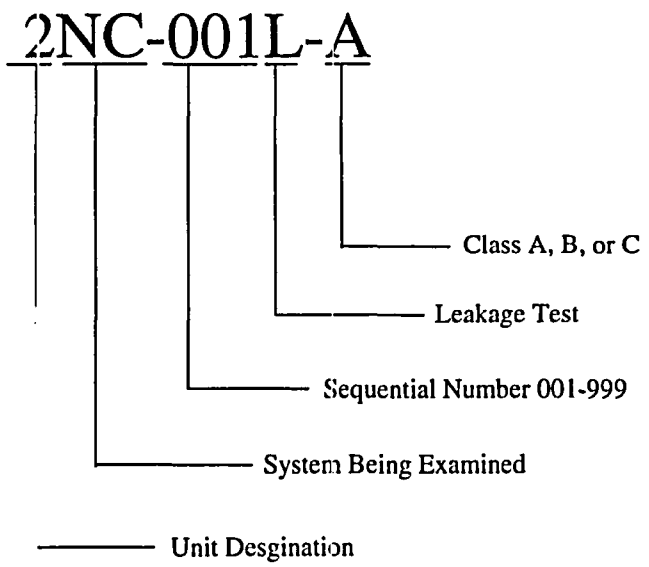

Pressure Testing Examination Zone Report

A listing of the Pressure Testing zone numbers, schedules, and associated inspection information is shown on the following pages:

Date: 01/25/2006

Report Page No. 1

Duke Energy Corporation

Catawba Unit 2 - 3rd 10-Year Interval

Pressure Testing Examination Zone Report

Zone No.	Dwg. No.	ISI Class	ISI Category	System	Examination Frequency	Examination Outage Schedule	Req. Test	Req. Exam	Req. Proc.	ASME Item No.
2BB-001L-B	CN-ISIL3-2565-2.6	--- B ---	--- C-H ---	Steam Generator Blowdown (BB)	Each Period	14 15 16 17 18 19 20	Leakage	VT-2	QAL-15	C7.10
2BB-001L-B	CN-ISIL3-2572-1.4	--- B ---	--- C-H ---	Steam Generator Blowdown (BB)	Each Period	14 15 16 17 18 19 20	Leakage	VT-2	QAL-15	C7.10
2BB-001L-B	CN-ISIL3-2580-1.0	--- B ---	--- C-H ---	Steam Generator Blowdown (BB)	Each Period	14 15 16 17 18 19 20	Leakage	VT-2	QAL-15	C7.10
2CA-001L-B	CN-ISIL3-2584-1.0	--- B ---	--- C-H ---	Auxiliary Feedwater (CA)	Each Period	14 15 16 17 18 19 20	Leakage	VT-2	QAL-15	C7.10
2CA-001L-B	CN-ISIL3-2591-1.1	--- B ---	--- C-H ---	Auxiliary Feedwater (CA)	Each Period	14 15 16 17 18 19 20	Leakage	VT-2	QAL-15	C7.10
2CA-001L-B	CN-ISIL3-2592-1.1	--- B ---	--- C-H ---	Auxiliary Feedwater (CA)	Each Period	14 15 16 17 18 19 20	Leakage	VT-2	QAL-15	C7.10
2CA-001L-B	CN-ISIL3-2593-1.0	--- B ---	--- C-H ---	Auxiliary Feedwater (CA)	Each Period	14 15 16 17 18 19 20	Leakage	VT-2	QAL-15	C7.10
2CA-001L-B	CN-ISIL3-2593-1.1	--- B ---	--- C-H ---	Auxiliary Feedwater (CA)	Each Period	14 15 16 17 18 19 20	Leakage	VT-2	QAL-15	C7.10
2CA-001L-B	CN-ISIL3-2593-1.7	--- B ---	--- C-H ---	Auxiliary Feedwater (CA)	Each Period	14 15 16 17 18 19 20	Leakage	VT-2	QAL-15	C7.10
2CA-001L-C	CN-ISIL3-2592-1.0	--- --- C	--- --- D-B	Auxiliary Feedwater (CA)	Each Period	14 15 16 17 18 19 20	Leakage	VT-2	QAL-15	D2.10
2CA-001L-C	CN-ISIL3-2592-1.1	--- --- C	--- --- D-B	Auxiliary Feedwater (CA)	Each Period	14 15 16 17 18 19 20	Leakage	VT-2	QAL-15	D2.10
2CA-002L-C	CN-ISIL3-2592-1.0	--- --- C	--- --- D-B	Auxiliary Feedwater (CA)	Each Period	14 15 16 17 18 19 20	Leakage	VT-2	QAL-15	D2.10
2CA-002L-C	CN-ISIL3-2592-1.1	--- --- C	--- --- D-B	Auxiliary Feedwater (CA)	Each Period	14 15 16 17 18 19 20	Leakage	VT-2	QAL-15	D2.10
2CA-003L-C	CN-ISIL3-2592-1.0	--- --- C	--- --- D-B	Auxiliary Feedwater (CA)	Each Period	14 15 16 17 18 19 20	Leakage	VT-2	QAL-15	D2.10

Duke Energy Corporation

Catawba Unit 2 - 3rd 10-Year Interval

Pressure Testing Examination Zone Report

Zone No.	Dwg. No.	ISI Class	ISI Category	System	Examination Frequency	Examination Outage Schedule	Req. Test	Req. Exam	Req. Proc.	ASME Item No.
2CA-003L-C	CN-ISIL3-2592-1.1	--- --- C	--- --- D-B	Auxiliary Feedwater (CA)	Each Period	14 15 16 17 18 19 20	Leakage	VT-2	QAL-15	D2.10
2DG-001L-C	CN-ISIL3-2609-1.0	--- --- C	--- --- D-B	Diesel Generator (DG)	Each Period	14 15 16 17 18 19 20	Leakage	VT-2	QAL-15	D2.10
2DG-001L-C	CN-ISIL3-2609-2.0	--- --- C	--- --- D-B	Diesel Generator (DG)	Each Period	14 15 16 17 18 19 20	Leakage	VT-2	QAL-15	D2.10
2DG-001L-C	CN-ISIL3-2609-3.0	--- --- C	--- --- D-B	Diesel Generator (DG)	Each Period	14 15 16 17 18 19 20	Leakage	VT-2	QAL-15	D2.10
2DG-002L-C	CN-ISIL3-2609-1.0	--- --- C	--- --- D-B	Diesel Generator (DG)	Each Period	14 15 16 17 18 19 20	Leakage	VT-2	QAL-15	D2.10
2DG-002L-C	CN-ISIL3-2609-2.2	--- --- C	--- --- D-B	Diesel Generator (DG)	Each Period	14 15 16 17 18 19 20	Leakage	VT-2	QAL-15	D2.10
2DG-002L-C	CN-ISIL3-2609-3.1	--- --- C	--- --- D-B	Diesel Generator (DG)	Each Period	14 15 16 17 18 19 20	Leakage	VT-2	QAL-15	D2.10
2FW-001L-B	CN-ISIL3-2554-1.7	--- B ---	--- C-H ---	Refueling Water (FW)	Each Period	14 15 16 17 18 19 20	Leakage	VT-2	QAL-15	C7.10
2FW-001L-B	CN-ISIL3-2563-1.0	--- B ---	--- C-H ---	Refueling Water (FW)	Each Period	14 15 16 17 18 19 20	Leakage	VT-2	QAL-15	C7.10
2FW-001L-B	CN-ISIL3-2571-1.0	--- B ---	--- C-H ---	Refueling Water (FW)	Each Period	14 15 16 17 18 19 20	Leakage	VT-2	QAL-15	C7.10
2FW-002L-B	CN-ISIL3-2571-1.0	--- B ---	--- C-H ---	Refueling Water (FW)	Each Period	14 15 16 17 18 19 20	Leakage	VT-2	QAL-15	C7.10
2KC-001L-C	CN-ISIL3-1573-1.6	--- --- C	--- --- D-B	Component Cooling (KC)	Each Period	14 15 16 17 18 19 20	Leakage	VT-2	QAL-15	D2.10
2KC-001L-C	CN-ISIL3-2573-1.0	--- --- C	--- --- D-B	Component Cooling (KC)	Each Period	14 15 16 17 18 19 20	Leakage	VT-2	QAL-15	D2.10
2KC-001L-C	CN-ISIL3-2573-1.1	--- --- C	--- --- D-B	Component Cooling (KC)	Each Period	14 15 16 17 18 19 20	Leakage	VT-2	QAL-15	D2.10

Duke Energy Corporation

Catawba Unit 2 - 3rd 10-Year Interval

Pressure Testing Examination Zone Report

Zone No.	Dwg. No.	ISI Class	ISI Category	System	Examination Frequency	Examination Outage Schedule	Req. Test	Req. Exam	Req. Proc.	ASME Item No.
2KC-001L-C	CN-ISIL3-2573-1.2	--- --- C	--- --- D-B	Component Cooling (KC)	Each Period	14 15 16 17 18 19 20	Leakage	VT-2	QAL-15	D2.10
2KC-001L-C	CN-ISIL3-2573-2.0	--- --- C	--- --- D-B	Component Cooling (KC)	Each Period	14 15 16 17 18 19 20	Leakage	VT-2	QAL-15	D2.10
2KC-001L-C	CN-ISIL3-2573-2.2	--- --- C	--- --- D-B	Component Cooling (KC)	Each Period	14 15 16 17 18 19 20	Leakage	VT-2	QAL-15	D2.10
2KF-001L-C	CN-ISIL3-2570-1.0	--- --- C	--- --- D-B	Spent Fuel Cooling (KF)	Each Period	14 15 16 17 18 19 20	Leakage	VT-2	QAL-15	D2.10
2KF-002L-C	CN-ISIL3-2570-1.0	--- --- C	--- --- D-B	Spent Fuel Cooling (KF)	Each Period	14 15 16 17 18 19 20	Leakage	VT-2	QAL-15	D2.10
2NC-001L-A	CN-ISIL3-2553-1.0	A B ---	B-P C-H ---	Reactor Coolant (NC)	Each Refueling Outage	14 15 16 17 18 19 20	Leakage	VT-2	QAL-15	B15.11 B15.31 B15.51 B15.61 B15.71 C7.10
2NC-001L-A	CN-ISIL3-2553-1.1	A B ---	B-P C-H ---	Reactor Coolant (NC)	Each Refueling Outage	14 15 16 17 18 19 20	Leakage	VT-2	QAL-15	B15.21 B15.51 B15.71 C7.10
2NC-001L-A	CN-ISIL3-2554-1.0	A --- ---	B-P --- ---	Reactor Coolant (NC)	Each Refueling Outage	14 15 16 17 18 19 20	Leakage	VT-2	QAL-15	B15.51 B15.71
2NC-001L-A	CN-ISIL3-2554-1.5	A --- ---	B-P --- ---	Reactor Coolant (NC)	Each Refueling Outage	14 15 16 17 18 19 20	Leakage	VT-2	QAL-15	B15.51 B15.71
2NC-001L-A	CN-ISIL3-2562-1.0	A --- ---	B-P --- ---	Reactor Coolant (NC)	Each Refueling Outage	14 15 16 17 18 19 20	Leakage	VT-2	QAL-15	B15.51 B15.71
2NC-001L-A	CN-ISIL3-2562-1.1	A B ---	B-P C-H ---	Reactor Coolant (NC)	Each Refueling Outage	14 15 16 17 18 19 20	Leakage	VT-2	QAL-15	B15.51 B15.71 C7.10
2NC-001L-A	CN-ISIL3-2562-1.2	A B ---	B-P C-H ---	Reactor Coolant (NC)	Each Refueling Outage	14 15 16 17 18 19 20	Leakage	VT-2	QAL-15	B15.51 B15.71

Duke Energy Corporation

Catawba Unit 2 - 3rd 10-Year Interval

Pressure Testing Examination Zone Report

Zone No.	Dwg. No.	ISI Class	ISI Category	System	Examination Frequency	Examination Outage Schedule	Req. Test	Req. Exam	Req. Proc.	ASME Item No.
										C7.10
2NC-001L-A	CN-ISIL3-2562-1.3	A --- ---	B-P --- ---	Reactor Coolant (NC)	Each Refueling Outage	14 15 16 17 18 19 20	Leakage	VT-2	QAL-15	B15.51 B15.71
2ND-001L-B	CN-ISIL3-2561-1.0	--- B ---	--- C-H ---	Residual Heat Removal (ND)	Each Period	14 15 16 17 18 19 20	Leakage	VT-2	QAL-15	C7.10
2ND-001L-B	CN-ISIL3-2561-1.1	--- B ---	--- C-H ---	Residual Heat Removal (ND)	Each Period	14 15 16 17 18 19 20	Leakage	VT-2	QAL-15	C7.10
2ND-001L-B	CN-ISIL3-2562-1.2	--- B ---	--- C-H ---	Residual Heat Removal (ND)	Each Period	14 15 16 17 18 19 20	Leakage	VT-2	QAL-15	C7.10
2ND-001L-B	CN-ISIL3-2562-1.3	--- B ---	--- C-H ---	Residual Heat Removal (ND)	Each Period	14 15 16 17 18 19 20	Leakage	VT-2	QAL-15	C7.10
2ND-001L-B	CN-ISIL3-2563-1.0	--- B ---	--- C-H ---	Residual Heat Removal (ND)	Each Period	14 15 16 17 18 19 20	Leakage	VT-2	QAL-15	C7.10
2ND-001L-B	CN-ISIL3-2571-1.0	--- B ---	--- C-H ---	Residual Heat Removal (ND)	Each Period	14 15 16 17 18 19 20	Leakage	VT-2	QAL-15	C7.10
2ND-001L-B	CN-ISIL3-2572-1.0	--- B ---	--- C-H ---	Residual Heat Removal (ND)	Each Period	14 15 16 17 18 19 20	Leakage	VT-2	QAL-15	C7.10
2ND-002L-B	CN-ISIL3-2561-1.1	--- B ---	--- C-H ---	Residual Heat Removal (ND)	Each Period	14 15 16 17 18 19 20	Leakage	VT-2	QAL-15	C7.10
2ND-002L-B	CN-ISIL3-2562-1.3	--- B ---	--- C-H ---	Residual Heat Removal (ND)	Each Period	14 15 16 17 18 19 20	Leakage	VT-2	QAL-15	C7.10
2ND-002L-B	CN-ISIL3-2563-1.0	--- B ---	--- C-H ---	Residual Heat Removal (ND)	Each Period	14 15 16 17 18 19 20	Leakage	VT-2	QAL-15	C7.10
2ND-003L-B	CN-ISIL3-2561-1.0	--- B ---	--- C-H ---	Residual Heat Removal (ND)	Each Period	14 15 16 17 18 19 20	Leakage	VT-2	QAL-15	C7.10
2NI-001L-B	CN-ISIL3-2562-1.1	--- B ---	--- C-H ---	Safety Injection (NI)	Each Period	14 15 16 17 18 19 20	Leakage	VT-2	QAL-15	C7.10

Date: 01/25/2006

Report Page No. 5

Duke Energy Corporation

Catawba Unit 2 - 3rd 10-Year Interval

Pressure Testing Examination Zone Report

Zone No.	Dwg. No.	ISI Class	ISI Category	System	Examination Frequency	Examination Outage Schedule	Req. Test	Req. Exam	Req. Proc.	ASME Item No.
2NI-001L-B	CN-ISIL3-2572-1.1	--- B ---	--- C-H ---	Safety Injection (NI)	Each Period	14 15 16 17 18 19 20	Leakage	VT-2	QAL-15	C7.10
2NI-002L-B	CN-ISIL3-2562-1.1	--- B ---	--- C-H ---	Safety Injection (NI)	Each Period	14 15 16 17 18 19 20	Leakage	VT-2	QAL-15	C7.10
2NI-003L-B	CN-ISIL3-2562-1.2	--- B ---	--- C-H ---	Safety Injection (NI)	Each Period	14 15 16 17 18 19 20	Leakage	VT-2	QAL-15	C7.10
2NI-003L-B	CN-ISIL3-2562-1.3	--- B ---	--- C-H ---	Safety Injection (NI)	Each Period	14 15 16 17 18 19 20	Leakage	VT-2	QAL-15	C7.10
2NI-004L-B	CN-ISIL3-2562-1.3	--- B ---	--- C-H ---	Safety Injection (NI)	Each Period	14 15 16 17 18 19 20	Leakage	VT-2	QAL-15	C7.10
2NI-005L-B	CN-ISIL3-2562-1.2	--- B ---	--- C-H ---	Safety Injection (NI)	Each Period	14 15 16 17 18 19 20	Leakage	VT-2	QAL-15	C7.10
2NI-006L-B	CN-ISIL3-2562-1.2	--- B ---	--- C-H ---	Safety Injection (NI)	Each Period	14 15 16 17 18 19 20	Leakage	VT-2	QAL-15	C7.10
2NI-007L-B	CN-ISIL3-2562-1.2	--- B ---	--- C-H ---	Safety Injection (NI)	Each Period	14 15 16 17 18 19 20	Leakage	VT-2	QAL-15	C7.10
2NI-008L-B	CN-ISIL3-2562-1.2	--- B ---	--- C-H ---	Safety Injection (NI)	Each Period	14 15 16 17 18 19 20	Leakage	VT-2	QAL-15	C7.10
2NI-009L-B	CN-ISIL3-2562-1.2	--- B ---	--- C-H ---	Safety Injection (NI)	Each Period	14 15 16 17 18 19 20	Leakage	VT-2	QAL-15	C7.10
2NS-001L-B	CN-ISIL3-2563-1.0	--- B ---	--- C-H ---	Containment Spray (NS)	Each Period	14 15 16 17 18 19 20	Leakage	VT-2	QAL-15	C7.10
2NS-002L-B	CN-ISIL3-2563-1.0	--- B ---	--- C-H ---	Containment Spray (NS)	Each Period	14 15 16 17 18 19 20	Leakage	VT-2	QAL-15	C7.10
2NV-001L-B	CN-ISIL3-2554-1.0	--- B ---	--- C-H ---	Chemical & Volume Control (NV)	Each Period	14 15 16 17 18 19 20	Leakage	VT-2	QAL-15	C7.10
2NV-001L-B	CN-ISIL3-2554-1.5	--- B ---	--- C-H ---	Chemical & Volume Control (NV)	Each Period	14 15 16 17 18 19 20	Leakage	VT-2	QAL-15	C7.10

Date: 01/25/2006

Report Page No. 6

Duke Energy Corporation

Catawba Unit 2 - 3rd 10-Year Interval

Pressure Testing Examination Zone Report

Zone No.	Dwg. No.	ISI Class	ISI Category	System	Examination Frequency	Examination Outage Schedule	Req. Test	Req. Exam	Req. Proc.	ASME Item No.
2NV-001L-B	CN-ISIL3-2554-1.8	--- B ---	--- C-H ---	Chemical & Volume Control (NV)	Each Period	14 15 16 17 18 19 20	Leakage	VT-2	QAL-15	C7.10
2NV-001L-C	CN-ISIL3-1554-1.4	--- --- C	--- --- D-B	Chemical & Volume Control (NV)	Each Period	14 15 16 17 18 19 20	Leakage	VT-2	QAL-15	D2.10
2NV-001L-C	CN-ISIL3-2554-1.4	--- --- C	--- --- D-B	Chemical & Volume Control (NV)	Each Period	14 15 16 17 18 19 20	Leakage	VT-2	QAL-15	D2.10
2NV-002L-B	CN-ISIL3-2554-1.7	--- B ---	--- C-H ---	Chemical & Volume Control (NV)	Each Period	14 15 16 17 18 19 20	Leakage	VT-2	QAL-15	C7.10
2NV-004L-B	CN-ISIL3-2554-1.2	--- B ---	--- C-H ---	Chemical & Volume Control (NV)	Each Period	14 15 16 17 18 19 20	Leakage	VT-2	QAL-15	C7.10
2NV-005L-B	CN-ISIL3-2554-1.2	--- B ---	--- C-H ---	Chemical & Volume Control (NV)	Each Period	14 15 16 17 18 19 20	Leakage	VT-2	QAL-15	C7.10
2NV-006L-B	CN-ISIL3-1554-1.4	--- B ---	--- C-H ---	Chemical & Volume Control (NV)	Each Period	14 15 16 17 18 19 20	Leakage	VT-2	QAL-15	C7.10
2NV-006L-B	CN-ISIL3-1556-1.0	--- B ---	--- C-H ---	Chemical & Volume Control (NV)	Each Period	14 15 16 17 18 19 20	Leakage	VT-2	QAL-15	C7.10
2NV-006L-B	CN-ISIL3-2554-1.0	--- B ---	--- C-H ---	Chemical & Volume Control (NV)	Each Period	14 15 16 17 18 19 20	Leakage	VT-2	QAL-15	C7.10
2NV-006L-B	CN-ISIL3-2554-1.1	--- B ---	--- C-H ---	Chemical & Volume Control (NV)	Each Period	14 15 16 17 18 19 20	Leakage	VT-2	QAL-15	C7.10
2NV-006L-B	CN-ISIL3-2554-1.2	--- B ---	--- C-H ---	Chemical & Volume Control (NV)	Each Period	14 15 16 17 18 19 20	Leakage	VT-2	QAL-15	C7.10
2NV-006L-B	CN-ISIL3-2554-1.5	--- B ---	--- C-H ---	Chemical & Volume Control (NV)	Each Period	14 15 16 17 18 19 20	Leakage	VT-2	QAL-15	C7.10
2NV-006L-B	CN-ISIL3-2554-1.6	--- B ---	--- C-H ---	Chemical & Volume Control (NV)	Each Period	14 15 16 17 18 19 20	Leakage	VT-2	QAL-15	C7.10
2NV-006L-B	CN-ISIL3-2554-1.7	--- B ---	--- C-H ---	Chemical & Volume Control (NV)	Each Period	14 15 16 17 18 19 20	Leakage	VT-2	QAL-15	C7.10

Duke Energy Corporation

Catawba Unit 2 - 3rd 10-Year Interval

Pressure Testing Examination Zone Report

Zone No.	Dwg. No.	ISI Class	ISI Category	System	Examination Frequency	Examination Outage Schedule	Req. Test	Req. Exam	Req. Proc.	ASME Item No.
2NV-006L-B	CN-ISIL3-2562-1.0	--- B ---	--- C-H ---	Chemical & Volume Control (NV)	Each Period	14 15 16 17 18 19 20	Leakage	VT-2	QAL-15	C7.10
2NV-006L-B	CN-ISIL3-2562-1.2	--- B ---	--- C-H ---	Chemical & Volume Control (NV)	Each Period	14 15 16 17 18 19 20	Leakage	VT-2	QAL-15	C7.10
2RN-001L-C	CN-ISIL3-2574-2.0	--- --- C	--- --- D-B	Nuclear Service Water (RN)	Each Period	14 15 16 17 18 19 20	Leakage	VT-2	QAL-15	D2.10
2RN-002L-C	CN-ISIL3-2574-2.1	--- --- C	--- --- D-B	Nuclear Service Water (RN)	Each Period	14 15 16 17 18 19 20	Leakage	VT-2	QAL-15	D2.10
2RN-004L-C	CN-ISIL3-2574-2.4	--- --- C	--- --- D-B	Nuclear Service Water (RN)	Each Period	14 15 16 17 18 19 20	Leakage	VT-2	QAL-15	D2.10
2RN-005L-C	CN-ISIL3-2574-2.5	--- --- C	--- --- D-B	Nuclear Service Water (RN)	Each Period	14 15 16 17 18 19 20	Leakage	VT-2	QAL-15	D2.10
2SA-001L-B	CN-ISIL3-2593-1.1	--- B ---	--- C-H ---	Main Steam to Aux. Equip. (SA)	Each Period	14 15 16 17 18 19 20	Leakage	VT-2	QAL-15	C7.10
2SA-001L-C	CN-ISIL3-2593-1.1	--- B C	--- C-H D-B	Main Steam to Aux. Equip. (SA)	Each Period	14 15 16 17 18 19 20	Leakage	VT-2	QAL-15	C7.10 D2.10
2NC-001L-A	CN-ISIL3-2561-1.0	A B ---	B-P C-H ---	Reactor Coolant (NC)	Each Refueling Outage	14 15 16 17 18 19 20	Leakage	VT-2	QAL-15	B15.51 B15.71 C7.10
2NC-001L-A	CN-ISIL3-2561-1.1	A B ---	B-P C-H ---	Reactor Coolant (NC)	Each Refueling Outage	14 15 16 17 18 19 20	Leakage	VT-2	QAL-15	B15.51 B15.71 C7.10
2FW-001L-B	CN-ISIL3-2554-1.2	--- B ---	--- C-H ---	Refueling Water (FW)	Each Period	14 15 16 17 18 19 20	Leakage	VT-2	QAL-15	C7.10
2FW-001L-B	CN-ISIL3-2561-1.0	--- B ---	--- C-H ---	Refueling Water (FW)	Each Period	14 15 16 17 18 19 20	Leakage	VT-2	QAL-15	C7.10
2FW-001L-B	CN-ISIL3-2562-1.2	--- B ---	--- C-H ---	Refueling Water (FW)	Each Period	14 15 16 17 18 19 20	Leakage	VT-2	QAL-15	C7.10
2FW-001L-B	CN-ISIL3-2570-1.0	--- B ---	--- C-H ---	Refueling Water (FW)	Each Period	14 15 16 17 18 19 20	Leakage	VT-2	QAL-15	C7.10

Duke Energy Corporation

Catawba Unit 2 - 3rd 10-Year Interval

Pressure Testing Examination Zone Report

Zone No.	Dwg. No.	ISI Class	ISI Category	System	Examination Frequency	Examination Outage Schedule	Req. Test	Req. Exam	Req. Proc.	ASME Item No.
2KC-002L-C	CN-ISIL3-2573-1.0	--- --- C	--- --- D-B	Component Cooling (KC)	Each Period	14 15 16 17 18 19 20	Leakage	VT-2	QAL-15	D2.10
2KC-002L-C	CN-ISIL3-2573-1.1	--- --- C	--- --- D-B	Component Cooling (KC)	Each Period	14 15 16 17 18 19 20	Leakage	VT-2	QAL-15	D2.10
2KC-002L-C	CN-ISIL3-2573-2.1	--- --- C	--- --- D-B	Component Cooling (KC)	Each Period	14 15 16 17 18 19 20	Leakage	VT-2	QAL-15	D2.10
2KC-002L-C	CN-ISIL3-2573-2.3	--- --- C	--- --- D-B	Component Cooling (KC)	Each Period	14 15 16 17 18 19 20	Leakage	VT-2	QAL-15	D2.10
2KF-001L-C	CN-ISIL3-2570-1.1	--- --- C	--- --- D-B	Spent Fuel Cooling (KF)	Each Period	14 15 16 17 18 19 20	Leakage	VT-2	QAL-15	D2.10
2ND-002L-B	CN-ISIL3-2561-1.0	--- B ---	--- C-H ---	Residual Heat Removal (ND)	Each Period	14 15 16 17 18 19 20	Leakage	VT-2	QAL-15	C7.10
2ND-002L-B	CN-ISIL3-2562-1.2	--- B ---	--- C-H ---	Residual Heat Removal (ND)	Each Period	14 15 16 17 18 19 20	Leakage	VT-2	QAL-15	C7.10
2ND-002L-B	CN-ISIL3-2571-1.0	--- B ---	--- C-H ---	Residual Heat Removal (ND)	Each Period	14 15 16 17 18 19 20	Leakage	VT-2	QAL-15	C7.10
2ND-002L-B	CN-ISIL3-2572-1.0	--- B ---	--- C-H ---	Residual Heat Removal (ND)	Each Period	14 15 16 17 18 19 20	Leakage	VT-2	QAL-15	C7.10
2ND-003L-B	CN-ISIL3-2554-1.0	--- B ---	--- C-H ---	Residual Heat Removal (ND)	Each Period	14 15 16 17 18 19 20	Leakage	VT-2	QAL-15	C7.10
2ND-004L-B	CN-ISIL3-2554-1.7	--- B ---	--- C-H ---	Residual Heat Removal (ND)	Each Period	14 15 16 17 18 19 20	Leakage	VT-2	QAL-15	C7.10
2ND-004L-B	CN-ISIL3-2561-1.0	--- B ---	--- C-H ---	Residual Heat Removal (ND)	Each Period	14 15 16 17 18 19 20	Leakage	VT-2	QAL-15	C7.10
2NI-002L-B	CN-ISIL3-2562-1.2	--- B ---	--- C-H ---	Safety Injection (NI)	Each Period	14 15 16 17 18 19 20	Leakage	VT-2	QAL-15	C7.10
2NV-001L-C	CN-ISIL3-2554-1.2	--- --- C	--- --- D-B	Chemical & Volume Control (NV)	Each Period	14 15 16 17 18 19 20	Leakage	VT-2	QAL-15	D2.10

Duke Energy Corporation

Catawba Unit 2 - 3rd 10-Year Interval
Pressure Testing Examination Zone Report

Zone No.	Dwg. No.	ISI Class	ISI Category	System	Examination Frequency	Examination Outage Schedule	Req. Test	Req. Exam	Req. Proc.	ASME Item No.
2NV-001L-C	CN-ISIL3-2554-1.7	--- --- C	--- --- D-B	Chemical & Volume Control (NV)	Each Period	14 15 16 17 18 19 20	Leakage	VT-2	QAL-15	D2.10
2RN-001L-C	CN-ISIL3-2569-1.0	--- --- C	--- --- D-B	Nuclear Service Water (RN)	Each Period	14 15 16 17 18 19 20	Leakage	VT-2	QAL-15	D2.10
2RN-003L-C	CN-ISIL3-2574-2.1	--- --- C	--- --- D-B	Nuclear Service Water (RN)	Each Period	14 15 16 17 18 19 20	Leakage	VT-2	QAL-15	D2.10
2RN-004L-C	CN-ISIL3-2569-1.0	--- --- C	--- --- D-B	Nuclear Service Water (RN)	Each Period	14 15 16 17 18 19 20	Leakage	VT-2	QAL-15	D2.10
2CA-005L-C	CN-ISIL3-2574-2.5	--- --- C	--- --- D-B	Auxiliary Feedwater (CA)	Each Period	14 15 16 17 18 19 20	Leakage	VT-2	QAL-15	D2.10
2BB-001L-B	CN-ISIL3-2584-1.0	--- B ---	--- C-H ---	Steam Generator Blowdown (BB)	Each Period	14 15 16 17 18 19 20	Leakage	VT-2	QAL-15	C7.10
2NI-010L-B	CN-ISIL3-2562-1.0	--- B ---	--- C-H ---	Safety Injection (NI)	Each Period	14 15 16 17 18 19 20	Leakage	VT-2	QAL-15	C7.10
2NV-003L-B	CN-ISIL3-2554-1.7	--- B ---	--- C-H ---	Chemical & Volume Control (NV)	Each Period	14 15 16 17 18 19 20	Leakage	VT-2	QAL-15	C7.10
2CA-004L-C	CN-ISIL3-2574-2.1	--- --- C	--- --- D-B	Auxiliary Feedwater (CA)	Each Period	14 15 16 17 18 19 20	Leakage	VT-2	QAL-15	D2.10
2CA-004L-C	CN-ISIL3-2573-2.2	--- --- C	--- --- D-B	Auxiliary Feedwater (CA)	Each Period	14 15 16 17 18 19 20	Leakage	VT-2	QAL-15	D2.10
2CA-004L-C	CN-ISIL3-2592-1.0	--- --- C	--- --- D-B	Auxiliary Feedwater (CA)	Each Period	14 15 16 17 18 19 20	Leakage	VT-2	QAL-15	D2.10
2CA-004L-C	CN-ISIL3-2592-1.2	--- --- C	--- --- D-B	Auxiliary Feedwater (CA)	Each Period	14 15 16 17 18 19 20	Leakage	VT-2	QAL-15	D2.10
2CA-005L-C	CN-ISIL3-2573-2.3	--- --- C	--- --- D-B	Auxiliary Feedwater (CA)	Each Period	14 15 16 17 18 19 20	Leakage	VT-2	QAL-15	D2.10
2CA-005L-C	CN-ISIL3-2592-1.0	--- --- C	--- --- D-B	Auxiliary Feedwater (CA)	Each Period	14 15 16 17 18 19 20	Leakage	VT-2	QAL-15	D2.10

Duke Energy Corporation

Catawba Unit 2 - 3rd 10-Year Interval
Pressure Testing Examination Zone Report

Zone No.	Dwg. No.	ISI Class	ISI Category	System	Examination Frequency	Examination Outage Schedule	Req. Test	Req. Exam	Req. Proc.	ASME Item No.
2CA-005L-C	CN-ISIL3-2592-1.2	--- --- C	--- --- D-B	Auxiliary Feedwater (CA)	Each Period	14 15 16 17 18 19 20	Leakage	VT-2	QAL-15	D2.10
2NV-008L-B	CN-ISIL3-2554-1.0	--- B ---	--- C-H ---	Chemical & Volume Control (NV)	Each Period	14 15 16 17 18 19 20	Leakage	VT-2	QAL-15	C7.10
2NV-008L-B	CN-ISIL3-2554-1.2	--- B ---	--- C-H ---	Chemical & Volume Control (NV)	Each Period	14 15 16 17 18 19 20	Leakage	VT-2	QAL-15	C7.10
2NC-005L-B	CN-ISIL3-2553-1.0	--- B ---	--- C-H ---	Reactor Coolant (NC)	Each Period	14 15 16 17 18 19 20	Leakage	VT-2	QAL-15	C7.10
2NC-005L-B	CN-ISIL3-2572-1.0	--- B ---	--- C-H ---	Reactor Coolant (NC)	Each Period	14 15 16 17 18 19 20	Leakage	VT-2	QAL-15	C7.10
2NC-006L-B	CN-ISIL3-2553-1.1	--- B ---	--- C-H ---	Reactor Coolant (NC)	Each Period	14 15 16 17 18 19 20	Leakage	VT-2	QAL-15	C7.10
2NC-006L-B	CN-ISIL3-2572-1.0	--- B ---	--- C-H ---	Reactor Coolant (NC)	Each Period	14 15 16 17 18 19 20	Leakage	VT-2	QAL-15	C7.10
2NC-001L-A	CN-ISIL3-2553-1.2	--- B ---	--- C-H ---	Reactor Coolant (NC)	Each Period	14 15 16 17 18 19 20	Leakage	VT-2	QAL-15	C7.10
2WL-001L-C	CN-ISIL3-2565-2.2	--- --- C	--- --- D-B	Steam Generator Blowdown (BB)	Each Period	14 15 16 17 18 19 20	Leakage	VT-2	QAL-15	D2.10
2RN-006L-C	CN-ISIL3-2574-2.5	--- --- C	--- --- D-B	Nuclear Service Water (RN)	Each Period	14 15 16 17 18 19 20	Leakage	VT-2	QAL-15	D2.10

11	System, Boundary Drawing, and ISI Classification Listing

The pressure testing examination boundaries are identified on color coded electronic drawings (modified system flow diagrams) and stored in the Nuclear Electronic Document Library (NEDL). "As Built" system flow diagram revisions are reviewed to see if the revision had any impact on the pressure testing boundaries. These flow diagram revisions are incorporated into the Inservice Inspection pressure testing boundary drawings as necessary. Some flow diagram revisions do not affect the pressure testing boundaries; therefore, the pressure testing boundary drawings are not required to be revised. For this reason, there may be a difference between the numeric revision level listed on the flow diagram versus the revision level of the flow diagram referenced on the pressure testing boundary drawing. "As Built" flow diagram revisions are published subsequent to modifications that are made to a system. The latest revision of the pressure testing boundary drawing can be retrieved from NEDL.

The following is a list of the system flow diagrams that contain Class A, B, or C components. Each drawing has been reviewed for applicable system pressure testing requirements. In addition to the class, the listing contains those flow diagrams that are exempted from pressure testing requirements for Catawba Unit 2.

System	Flow Diagram	Class A	Class B	Class C	All Exempt
Chemical & Volume Control (NV)	CN-ISIL3-1554-1.4		X	X	
Boron Recycle (NB)	CN-ISIL3-1556-1.0		X		
Component Cooling (KC)	CN-ISIL3-1573-1.6			X	
Reactor Coolant (NC)	CN-ISIL3-2553-1.0	X	X		
Reactor Coolant (NC)	CN-ISIL3-2553-1.1	X	X		
Reactor Coolant (NC)	CN-ISIL3-2553-1.2		X		
Reactor Coolant (NC)	CN-ISIL3-2553-1.3		X		X
Chemical & Volume Control (NV)	CN-ISIL3-2554-1.0	X	X		
Chemical & Volume Control (NV)	CN-ISIL3-2554-1.1		X	X	
Chemical & Volume Control (NV)	CN-ISIL3-2554-1.2		X	X	
Chemical & Volume Control (NV)	CN-ISIL3-2554-1.3		X	X	X
Chemical & Volume Control (NV)	CN-ISIL3-2554-1.4			X	
Chemical & Volume Control (NV)	CN-ISIL3-2554-1.5	X	X		
Chemical & Volume Control (NV)	CN-ISIL3-2554-1.6		X	X	
Chemical & Volume Control (NV)	CN-ISIL3-2554-1.7		X	X	
Chemical & Volume Control (NV)	CN-ISIL3-2554-1.8		X		
Boron Thermal Regeneration (NR)	CN-ISIL3-2555-1.1		X		X
Boron Recycle (NB)	CN-ISIL3-2556-2.0		X		X
Containment Air Return & Hydrogen Skimmer (VX)	CN-ISIL3-2557-1.0		X		X
Ice Condenser Refrigeration (NF)	CN-ISIL3-2558-2.0		X		X
Containment Hydrogen Sample & Purge (VY)	CN-ISIL3-2559-1.0		X		X

System	Flow Diagram	Class A	Class B	Class C	All Exempt
Residual Heat Removal (ND)	CN-ISIL3-2561-1.0	X	X		
Residual Heat Removal (ND)	CN-ISIL3-2561-1.1	X	X		
Safety Injection (NI)	CN-ISIL3-2562-1.0	X	X		
Safety Injection (NI)	CN-ISIL3-2562-1.1	X	X		
Safety Injection (NI)	CN-ISIL3-2562-1.2	X	X		
Safety Injection (NI)	CN-ISIL3-2562-1.3	X	X		
Safety Injection (NI)	CN-ISIL3-2562-1.4		X		X
Containment Spray (NS)	CN-ISIL3-2563-1.0		X		
Annulus Ventilation (VE)	CN-ISIL3-2564-1.0			X	X
Liquid Radwaste (WL)	CN-ISIL3-2565-2.0		X	X	X
Liquid Radwaste (WL)	CN-ISIL3-2565-2.1		X		X
Liquid Radwaste (WL)	CN-ISIL3-2565-2.2			X	
Liquid Radwaste (WL)	CN-ISIL3-2565-2.4		X		X
Liquid Radwaste (WL)	CN-ISIL3-2565-2.6		X		
Equipment Decontamination (WE)	CN-ISIL3-2568-1.0		X	X	X
Containment Valve Injection Water (NW)	CN-ISIL3-2569-1.0		X	X	
Spent Fuel Cooling (KF)	CN-ISIL3-2570-1.0		X	X	
Spent Fuel Cooling (KF)	CN-ISIL3-2570-1.1			X	
Refueling Water (FW)	CN-ISIL3-2571-1.0		X		
Nuclear Sampling (NM)	CN-ISIL3-2572-1.0		X		
Nuclear Sampling (NM)	CN-ISIL3-2572-1.1		X		
Nuclear Sampling (NM)	CN-ISIL3-2572-1.2		X		X
Nuclear Sampling (NM)	CN-ISIL3-2572-1.4		X		
Component Cooling (KC)	CN-ISIL3-2573-1.0			X	
Component Cooling (KC)	CN-ISIL3-2573-1.1			X	
Component Cooling (KC)	CN-ISIL3-2573-1.2			X	
Component Cooling (KC)	CN-ISIL3-2573-1.3		X	X	X
Component Cooling (KC)	CN-ISIL3-2573-1.4		X	X	X
Component Cooling (KC)	CN-ISIL3-2573-1.5		X	X	X
Component Cooling (KC)	CN-ISIL3-2573-1.7		X	X	X
Component Cooling (KC)	CN-ISIL3-2573-2.0			X	
Component Cooling (KC)	CN-ISIL3-2573-2.1			X	
Component Cooling (KC)	CN-ISIL3-2573-2.2			X	
Component Cooling (KC)	CN-ISIL3-2573-2.3			X	

System	Flow Diagram	Class A	Class B	Class C	All Exempt
Nuclear Service Water (RN)	CN-ISIL3-2574-2.0			X	
Nuclear Service Water (RN)	CN-ISIL3-2574-2.1			X	
Nuclear Service Water (RN)	CN-ISIL3-2574-2.2		X		X
Nuclear Service Water (RN)	CN-ISIL3-2574-2.4			X	
Nuclear Service Water (RN)	CN-ISIL3-2574-2.5			X	
Nuclear Service Water (RN)	CN-ISIL3-2574-2.7		X		X
Containment Purge (VP)	CN-ISIL3-2576-1.0		X		X
Fuel Handling Area Ventilation (VF)	CN-ISIL3-2577-2.0			X	X
Steam Generator Blowdown (BB)	CN-ISIL3-2580-1.0		X		
Steam Generator Wet Layup Recirc. (BW)	CN-ISIL3-2584-1.0		X		
Containment Air Release & Addition (VQ)	CN-ISIL3-2585-1.0		X		X
Feedwater (CF)	CN-ISIL3-2591-1.1		X		
Auxiliary Feedwater (CA)	CN-ISIL3-2592-1.0			X	
Auxiliary Feedwater (CA)	CN-ISIL3-2592-1.1		X	X	
Auxiliary Feedwater (CA)	CN-ISIL3-2592-1.2			X	
Main Steam (SM)	CN-ISIL3-2593-1.0		X		
Main Steam to Aux. Equip. (SA)	CN-ISIL3-2593-1.1		X	X	
Steam Supply to F.D.W.P. Turbine (SP) F.D.W.P. Turbine Exhaust (TE)	CN-ISIL3-2593-1.2			X	X
Main Steam (SM)	CN-ISIL3-2593-1.7		X		
Instrument Air (VI)	CN-ISIL3-2605-1.5		X		X
Breathing Air (VB)	CN-ISIL3-2605-3.2		X		X
Diesel Generator Cooling Water (KD)	CN-ISIL3-2609-1.0			X	
Diesel Generator Lube Oil (LD)	CN-ISIL3-2609-2.0			X	
Diesel Generator Lube Oil (LD)	CN-ISIL3-2609-2.2			X	
Diesel Generator Fuel Oil (FD)	CN-ISIL3-2609-3.0			X	
Diesel Generator Fuel Oil (FD)	CN-ISIL3-2609-3.1			X	
Diesel Generator Starting Air (VG)	CN-ISIL3-2609-4.0			X	X
Diesel Generator Starting Air (VG)	CN-ISIL3-2609-4.1			X	X
Diesel Generator Air Intake & Exhaust (VN)	CN-ISIL3-2609-5.0			X	X
Diesel Generator Crankcase Vacuum (ZD)	CN-ISIL3-2609-6.0			X	X
Diesel Generator Sump Pump (WN)	CN-ISIL3-2609-7.0			X	X