NUREG/CR-6895

Technical Review of On-Line Monitoring Techniques for Performance Assessment

Volume 1: State-of-the-Art

University of Tennessee

U.S. Nuclear Regulatory Commission
Office of Nuclear Regulatory Research
Washington, DC 20555-0001

AVAILABILITY OF REFERENCE MATERIALS IN NRC PUBLICATIONS

NRC Reference Material

As of November 1999, you may electronically access NUREG-series publications and other NRC records at NRC's Public Electronic Reading Room at http://www.nrc.gov/reading-rm.html. Publicly released records include, to name a few, NUREG-series publications; *Federal Register* notices; applicant, licensee, and vendor documents and correspondence; NRC correspondence and internal memoranda; bulletins and information notices; inspection and investigative reports; licensee event reports; and Commission papers and their attachments.

NRC publications in the NUREG series, NRC regulations, and *Title 10, Energy*, in the Code of *Federal Regulations* may also be purchased from one of these two sources.

1. The Superintendent of Documents
   U.S. Government Printing Office
   Mail Stop SSOP
   Washington, DC 20402–0001
   Internet: bookstore.gpo.gov
   Telephone: 202-512-1800
   Fax: 202-512-2250
2. The National Technical Information Service
   Springfield, VA 22161–0002
   www.ntis.gov
   1–800–553–6847 or, locally, 703–605–6000

A single copy of each NRC draft report for comment is available free, to the extent of supply, upon written request as follows:
Address: Office of the Chief Information Officer,
Reproduction and Distribution
Services Section
U.S. Nuclear Regulatory Commission
Washington, DC 20555-0001
E-mail: DISTRIBUTION@nrc.gov
Facsimile: 301–415–2289

Some publications in the NUREG series that are posted at NRC's Web site address http://www.nrc.gov/reading-rm/doc-collections/nuregs are updated periodically and may differ from the last printed version. Although references to material found on a Web site bear the date the material was accessed, the material available on the date cited may subsequently be removed from the site.

Non-NRC Reference Material

Documents available from public and special technical libraries include all open literature items, such as books, journal articles, and transactions, *Federal Register* notices, Federal and State legislation, and congressional reports. Such documents as theses, dissertations, foreign reports and translations, and non-NRC conference proceedings may be purchased from their sponsoring organization.

Copies of industry codes and standards used in a substantive manner in the NRC regulatory process are maintained at—
The NRC Technical Library
Two White Flint North
11545 Rockville Pike
Rockville, MD 20852–2738

These standards are available in the library for reference use by the public. Codes and standards are usually copyrighted and may be purchased from the originating organization or, if they are American National Standards, from—
American National Standards Institute
11 West 42nd Street
New York, NY 10036–8002
www.ansi.org
212–642–4900

Legally binding regulatory requirements are stated only in laws; NRC regulations; licenses, including technical specifications; or orders, not in NUREG-series publications. The views expressed in contractor-prepared publications in this series are not necessarily those of the NRC.

The NUREG series comprises (1) technical and administrative reports and books prepared by the staff (NUREG–XXXX) or agency contractors (NUREG/CR–XXXX), (2) proceedings of conferences (NUREG/CP–XXXX), (3) reports resulting from international agreements (NUREG/IA–XXXX), (4) brochures (NUREG/BR–XXXX), and (5) compilations of legal decisions and orders of the Commission and Atomic and Safety Licensing Boards and of Directors' decisions under Section 2.206 of NRC's regulations (NUREG–0750).

DISCLAIMER: This report was prepared as an account of work sponsored by an agency of the U.S. Government. Neither the U.S. Government nor any agency thereof, nor any employee, makes any warranty, expressed or implied, or assumes any legal liability or responsibility for any third party's use, or the results of such use, of any information, apparatus, product, or process disclosed in this publication, or represents that its use by such third party would not infringe privately owned rights.

NUREG/CR-6895

Technical Review of On-Line Monitoring Techniques for Performance Assessment

Volume 1: State-of-the-Art

Manuscript Completed: March 2005
Date Published: January 2006

Prepared by
J.W. Hines, R. Seibert

University of Tennessee
Department of Nuclear Engineering
Knoxville, TN 37966-2210

S.A. Arndt, NRC Project Manager

Prepared for
Division of Engineering Technology
Office of Nuclear Regulatory Research
U.S. Nuclear Regulatory Commission
Washington, DC 20555-0001
NRC Job Code Y6472

ABSTRACT

In 1995 the NRC published a summary of the state-of-the-art for the area of on-line monitoring prepared by the Analysis and Measurement Services Corporation as NUREG/CR-6343, *On-Line Testing of Calibration of Process Instrumentation Channels in Nuclear Power Plants*. The conclusion of this report was that it is possible to monitor calibration drift of field sensor and associated signal electronics and determine performance of the instrument channels in a non-intrusive way.

In 1998, the Electric Power Research Institute (EPRI) submitted Topical Report (TR) 104965, *On-Line Monitoring of Instrument Channel Performance* for NRC review and approval. This report demonstrated a non-intrusive method for monitoring the performance of instrument channels and extending calibration intervals required by technical specifications (TS). A safety evaluation report (SER) was issued in 2000 in which NRC staff concluded that the generic concept of on-line monitoring (OLM) for tracking instrument performance as discussed in the topical report is acceptable. However, they also listed 14 requirements that must be addressed by plant specific license amendments if the TS-required calibration frequency of safety-related instrumentation is to be relaxed. The SER did not review or endorse either of the two methods addressed in the topical report.

This report, published in two volumes, provides an overview of current technologies being applied in the U.S. for sensor calibration monitoring. Volume I provides a general overview of current sensor calibration monitoring technologies and their uncertainty analysis, a review of the supporting information necessary for assessing these techniques, and a cross reference between the literature and the requirements listed in the SER. Volume II provides an independent evaluation of the application of OLM methods to reduce the TS-required calibration frequency.

FOREWORD

For the past two decades, the nuclear industry has attempted to move toward condition-based maintenance philosophies using new technologies developed to ascertain the condition of plant equipment during operation. Consequently, in November 1995, the U.S. Nuclear Regulatory Commission (NRC) published a summary of the state-of-the-art in the area of online monitoring (OLM) as NUREG/CR-6343, "On-Line Testing of Calibration of Process Instrumentation Channels in Nuclear Power Plants." In that report, the NRC staff concluded that it is possible to monitor the calibration drift of field sensors and associated signal electronics, and determine performance of instrument channels in a non-intrusive way.

Then, in 1998, the Electric Power Research Institute (EPRI) submitted Topical Report (TR) 104965, "On-Line Monitoring of Instrument Channel Performance" for NRC review and approval. That report demonstrated a non-intrusive method for monitoring the performance of instrument channels and extending calibration intervals required by technical specifications (TS). The NRC subsequently issued a related safety evaluation report (SER), dated July 24, 2000, in which the staff concluded that the generic concept of OLM is acceptable for use in tracking instrument performance as discussed in EPRI TR-104965. However, the staff also listed 14 requirements that must be addressed in plant-specific license amendments if the NRC is to relax the TS-required calibration frequency for safety-related instrumentation. The SER neither reviewed nor endorsed either of the two methods addressed in the topical report.

This is the first volume of a two-volume report, which will provide an overview of current technologies being applied in the United States to monitor sensor calibration. Volume I provides a general overview of current sensor calibration monitoring technologies and their uncertainty analysis, a review of the supporting information needed to assess these techniques, and a cross-reference between the literature and the requirements listed in the SER. The NRC staff anticipates that readers will use this reference to quickly locate the technical information required to assess the methods presented in plant-specific license amendments. Volume II of the report will present an in-depth theoretical study and independent review of the most widely used online sensor calibration monitoring techniques, and it will include a presentation of the theory and a listing and evaluation of the assumptions inherent in the methods.

This report is intended to provide the technical details that are necessary to conduct an accurate evaluation of each technique. This report should not be construed to imply that the NRC endorses any of the methods or technologies described herein; that is, a licensee would need to provide a complete description and justification for any proposed OLM approach.

Carl J. Paperiello, Director
Office of Nuclear Regulatory Research
U.S. Nuclear Regulatory Commission

CONTENTS

ABSTRACT iii

FOREWORD v

EXECUTIVE SUMMARY xi

ACRONYMS xiv

1. OVERVIEW 1
   - 1.1 Organization of this Report 3
   - 1.2 Background of Activities 5
   - 1.3 Regulatory Review Summary 6
     - 1.3.1 Basic Instrument Performance Monitoring System Description 6
     - 1.3.2 OLM Relationship to Setpoint Calculation 7
     - 1.3.3 Summary of NRC Safety Evaluation Review 14

2. REDUNDANT SENSOR MONITORING 20
   - 2.1 Instrumentation and Calibration Monitoring Program 20
   - 2.2 Independent Component Analysis 23

3. NON-REDUNDANT SENOR MONITORING 25
   - 3.1 Multivariate State Estimation Technique (MSET) 25
   - 3.2 Non-Linear Partial Least Squares (NLPLS) 27
   - 3.3 Auto-Associative Neural Networks (AANN) 28
   - 3.4 Comparisons 29
     - 3.4.1 Development Time and Effort 29
     - 3.4.2 Scalability 30
     - 3.4.3 Consistency of Results (Robustness) 31
     - 3.4.4 Non-Linear Modeling Capabilities 32
     - 3.4.5 Retraining 34
     - 3.4.6 Commercialization Level 34
     - 3.4.7 Experience Base 35
     - 3.4.8 Applications 36
     - 3.4.9 Comparison Summary 37
   - 3.5 Data Reconciliation 38

4. ON-LINE MONITORING IMPLEMENTATION 45
   - 4.1 Model Setup 45
   - 4.2 Model Performance Measures 46
     - 4.2.1 Accurate Results 46

4.2.2 Repeatable and Robust 47
4.2.3 Uncertainty 47
4.3 Model Development and Implementation 47

5. UNCERTAINTY ANALYSIS 51
5.1 Analytical Methods for Uncertainty Estimation 52
5.1.1 Prediction Interval Estimation for MSET 53
5.1.2 Prediction Interval Estimation for Artificial Neural Networks 55
5.1.3 Prediction Interval Estimation for NNPLS 56
5.2 Monte Carlo Methods for Uncertainty Estimation 57
5.2.1 Monte Carlo and ICMP 58
5.2.2 Bootstrapping 59
5.2.3 Bootstrapping Variations 62
5.2.4 De-Noising 63

6. CONCLUSIONS AND FUTURE CHALLENGES 66
6.1 Summary 66
6.2 Limitations of the Methods 66
6.3 Potential Issues and Challenges 67
6.3.1 Data Assumptions 67
6.3.2 Modeling Assumptions 67
6.3.3 Uncertainty Analysis Assumptions 68
6.3.4 Operational Assumptions 68
6.3.5 Single-Point Monitoring Penalty 69
6.3.6 Effect on Other Requirements 69
6.3.7 Common Mode Failure Detection 69
6.3.8 Software Verification and Validation 70
6.3.9 Financial Considerations 70
6.3.10 Employee Training 71
6.3.11 Quarterly Monitoring 71
6.4 Future Work 71

7. REFERENCES 72

Appendix 79
A.1 List of Relevant Documents 80
A.2 Requirement Matrix and Locator Guide 83
A.3 Discussion of NRC SE Requirements 85
A.4 Summary of Relevant Literature 95

LIST OF FIGURES

FIGURE 1-1 INSTRUMENT CALIBRATION MONITORING SYSTEM DIAGRAM 7
FIGURE 1-2 DEVIATION ZONES OF SENSOR STATUS 8
FIGURE 1-3 UNCERTAINTY IMPACT ON SENSOR OPERATING REGION 13
FIGURE 3-1 NLPLS INFERENTIAL UNIT SCHEMATIC 27
FIGURE 3-2 ARCHITECTURE OF A FIVE-LAYER BOTTLENECKED AANN 29
FIGURE 3-3 MODULAR DESIGN 33
FIGURE 3-4 DIAGRAM OF A FLOW SPLITTER 41
FIGURE 4-1 INSTRUMENT CHANNEL WITH ON-LINE MONITORING 45
FIGURE 4-2 ON-LINE MONITORING SYSTEM SETUP 46
FIGURE 4-3 PREDICTIONS WITH BAD DATA 48
FIGURE 4-4 PREDICTIONS WITH BAD DATA REMOVED 49
FIGURE 5-1 FLOWCHART OF MONTE CARLO METHOD 57
FIGURE 5-2 DIAGRAM OF BOOTSTRAP METHOD 60
FIGURE 5-3 ANL UNCERTAINTY METHODOLOGY 63
FIGURE 5-4 WAVELET-BASED SIGNAL DECOMPOSITION 64
FIGURE 5-5 DIAGRAM OF WAVELET DE-NOISING PROCESS 65

LIST OF TABLES

TABLE A-1 REQUIREMENT MATRIX 83
TABLE A-2 LOCATION GUIDE 84

EXECUTIVE SUMMARY

For the past two decades, the nuclear industry has attempted to move towards condition-based maintenance philosophies using new technologies developed to ascertain the condition of plant equipment during operation. Specifically, techniques have been developed to monitor the condition of sensors and their associated instrument loops while the plant is operating. Historically, process instrumentation channels have been manually calibrated at each refueling outage. This strategy is not optimal in that sensor conditions are only checked periodically; therefore, faulty sensors can continue to operate for periods up to the calibration frequency. Periodic maintenance strategies cause the unnecessary calibration of instruments that are operating correctly which can result in premature aging, damaged equipment, plant downtime, and improper calibration under non-service conditions. Recent studies have shown that less than 5% of process instrumentation being manually calibrated requires any correction at all. Therefore, plants are interested in monitoring sensor performance during operation and only manually calibrating the sensors that require correction.

In 1995, the NRC published a summary of the state-of-the-art in the area of on-line monitoring which was prepared by the Analysis and Measurement Services Corporation as NUREG/CR-6343, *On-Line Testing of Calibration of Process Instrumentation Channels in Nuclear Power Plants*. The conclusion of this report was that it is possible to monitor calibration drift of field sensors and associated signal electronics and determine performance of the instrument channels in a non-intrusive way.

In 1998, the Electric Power Research Institute (EPRI) submitted Topical Report TR-104965, *On-Line Monitoring of Instrument Channel Performance* for NRC review and approval. This report demonstrated a non-intrusive method for monitoring the performance of instrument channels and extending calibration intervals required by technical specifications (TS). The calibration extension method requires an underlying algorithm to estimate the process parameter. In the Topical Report, two such algorithms are described. The NRC issued a safety evaluation report (SER) on TR-104965 dated July 24, 2000, which concluded that the generic concept of on-line monitoring (OLM) for tracking instrument performance as discussed in the topical report is acceptable. However, they also listed 14 requirements that must be addressed by plant specific license amendments if the TS-required calibration frequency of safety-related instrumentation is to be relaxed. The SER did not review or endorse either of the two algorithms addressed in the topical report, but instead, left the choice of algorithm up to the utility.

This two-volume report provides an overview of the current OLM technologies. Volume I provides a general overview of the technologies currently being implemented for sensor calibration monitoring and presents the techniques used to quantify the uncertainty inherent in the empirical process variable predictions. It also provides a survey of the relevant information and a cross-reference between the relevant information and the 14 requirements. It is expected that readers will use this reference to quickly locate the technical information required to assess the methods presented in plant specific license amendments. Volume II of the report will present

an in-depth theoretical study and independent review of the most widely used on-line sensor calibration monitoring (OLM) techniques. It includes a presentation of the theory and a listing and evaluation of the assumptions inherent in the methods.

When evaluating the proposed methods during development of the SER, the staff did not review the two algorithms presented in the topical report and did not limit the application to those two methods. However, during a license review, the technical details of each particular technique must be understood in order to determine if the technique meets the specified functional requirements. Thus, this report is meant to provide these necessary technical details so that an accurate evaluation of each technique can be made. This report should not be construed as the NRC endorsing any of the described methods or technologies. A licensee would need to have a complete description and justification for any approach proposed for OLM.

This report reviews both redundant sensor monitoring techniques and techniques developed to model the relationships between non-redundant, yet correlated, sensors. The redundant techniques surveyed included the Instrumentation and Calibration Monitoring Program (ICMP) and Independent Component Analysis (ICA). The non-redundant methods presented in this report are the Multivariate State Estimation Technique (MSET), Auto Associative Neural Networks (AANN), and Non-Linear Partial Least Squares (NLPLS). In addition to presenting the theory, general application, and implementation of these methods, this report also provides a discussion of the uncertainty inherent in the predictions and the two methods used to quantify it. The two methods currently proposed are analytical closed form solutions that provide uncertainty estimates with each prediction and Monte Carlo-based statistical techniques that provide uncertainty estimates for specific operating conditions. Volume II of this report will provide a more in-depth theoretical analysis and comparison of the methods.

There are several issues and challenges surrounding the implementation of these methods. The current challenges include verifying that the assumptions inherent in the methods are met, or determining the overall impact when the assumptions are not met. These assumptions pertain to the data, the models, the uncertainty analysis, and the plant operations. The assumptions, such as having error-free training data which covers the future operating range and the ability of wavelet de-noising to remove measurement noise, are discussed herein and will be validated in Volume II of this report.

Single point monitoring is the term given to the technique of only monitoring the sensor calibration at a single operating point and extrapolating the results to the entire dynamic range of the instrument. This earlier challenge has been dealt with through a statistical study. This study validated OLM's application when the process is operating at a single point. However, an additional uncertainty value must be included in the drift allowance calculation to account for the small probability that the sensor is out of calibration at another point in the process span.

Common mode failure detection has been, and still is, a capability of interest. The use of redundant sensor modeling techniques is not capable of detecting common mode failures during

operation, but since current periodic manual calibrations also lack this capability, no current functionality is lost. However, non-redundant modeling techniques have the ability to detect common mode failure during operating and currently seem to be the preferred modeling method.

Two decades of research in these areas have resulted in hundreds of publications and technical reports. Many of the earlier reports have been superseded with more recent reports as newer results became available. The sheer volume of the literature makes a review of the techniques time consuming and exceptionally difficult. Therefore, a concise review of the relevant technical publications and reports along with a matrix that cross-references each document with the appropriate NRC SER requirement is included as an appendix. The appendix also contains a short summary that describes how the reviewed documents pertain to each of the NRC SER requirements.

Utilities wishing to implement these methods face several current issues and challenges including assumptions inherent the methods related to the data, the models, the uncertainty analysis, and the plant operations. These assumptions such as having error free training data that covers the future operating range and the ability of wavelet de-noising to remove measurement noise are discussed herein and will be validated in Volume II of this report.

ACRONYMS

AMS	Analysis and Measurement Services Corporation
ANL	Argonne National Laboratory
ANN	Artificial Neural Network
AANN	Auto Associative Neural Network
ADVOLM	Allowable Deviation Value for On-line Monitoring
CFR	Code of Federal Regulations
CLT	Central Limit Theorem
CSA	Channel Statistical Allowance
EdF	Electricite de France
EPRI	Electric Power Research Institute
ESEE	Expert State Estimation Engine
HRP	Halden Reactor Project
ICA	Independent Component Analysis
IMC	Instrument Monitoring and Calibration
ICMP	Instrumentation and Calibration Monitoring Program
IT	Information Technology
MSET	Multivariate State Estimation Technique
MAVD	Maximum Acceptable Value of Deviation
NLPLS	Non-Linear Partial Least Squares
NRC	Nuclear Regulatory Commission
NUREG/CR	NUREG Prepared by a Contractor
NUSMG	Nuclear Utilities Software Management Group
OLM	On-line Monitoring
PE	Process Parameter Estimate
PEANO	Process Evaluation and Analysis by Neural Operators
RPSS	Reactor Parameter Signal Simulator
QA	Quality Assurance
SER	Safety Evaluation Report
SISO	Single Input Single Output
SPRT	Sequential Probability Ration Test
SPSS	Stochastic Parameter Simulation System
TR	Topical Report
TS	Technical Specifications
TSP	Trip Set Point
V&V	Verification and Validation

1. OVERVIEW

For the past two decades, Nuclear Power Utilities have investigated and developed methods that would allow them to move away from periodic maintenance strategies and towards condition-based maintenance philosophies. Many of these methods make use of new technologies developed to ascertain the condition of plant equipment while the plant is operating. Specifically, techniques have been developed to monitor the condition of sensors and their associated instrument loops. These techniques are commonly referred to as On-Line Monitoring (OLM) methods.

Traditionally, manual calibration of nuclear instruments is required through regulation for technical specification variables, and performed during each nuclear power plant refueling outage. Nuclear utilities would like to replace these periodic manual calibrations with OLM methods for several reasons. First, these manual calibrations only validate the correct operation of the instrumentation periodically; therefore, faulty sensors may remain undetected for periods up to the calibration frequency. Studies have shown that less than 5% of the 50 to 150 calibrated instrument channels were in a degraded condition that required maintenance. With the estimated cost of a typical manual calibration ranging between $900 and $2000, the cost of the potentially unnecessary work is significant. Additionally, performing maintenance on components that are operating correctly provides an opportunity for a fault to enter the system. The proposed methods will continuously monitor the instrument channel condition and identify those that have degraded to an extent that warrants calibration. The identified instrument channels will be classified as either needing calibration at the next outage or as entirely inoperable based on the degree of degradation. It is expected that the on-line methods will reduce maintenance costs, reduce radiation exposure, reduce the potential for miscalibration, increase instrument reliability, and may reduce equipment downtime. Because of these advantages, many nuclear utilities are involved with testing and implementing condition directed calibration methodologies that make use of on-line monitoring techniques. These techniques determine the instrument channel status during plant operation. Many of these advantages, such as reduced radiation exposure, increased instrument reliability and increased equipment availability could also provide improvement the plant's safety, however, before the NRC can approve the needed changes to plant technical specifications they need to ensure that the uses of these methods meets the current regulations.

Early pioneers in the use of advanced information processing techniques for instrument condition monitoring included researchers at the University of Tennessee (UT) and Argonne National Laboratory. Researchers at Argonne National Laboratory continued the earlier work at UT to develop the Multivariate State Estimation System (MSET), which has gained wide interest in the US Nuclear Industry. Lisle, IL. based SmartSignal Corporation licensed the MSET technology for applications in all industries, and subsequently extended and modified the basic MSET technology in developing their commercial Equipment Condition Monitoring (SmartSignal eCM™) software. The Electric Power Research Institute (EPRI) has used a product from Expert Microsystems called SureSense, which also uses the MSET algorithm. Several other US

companies such as Pavillion Technologies, ASPEN IQ, and Performance Consulting Services have also developed sensor validation products. The major European participant in this area is the Halden Research Project that developed a system termed Plant Evaluation and Analysis by Neural Operators (PEANO) and applied it to the monitoring of nuclear power plant sensors.

The EPRI Instrument Monitoring and Calibration (IMC) Users Group was formed in 2000 with an objective to demonstrate OLM technology in operating nuclear power plants for a variety of systems and applications. A second objective is to verify that OLM is capable of identifying instrument drift or failure. The On-Line Monitoring Implementation Users Group was formed in mid 2001 to demonstrate OLM in multiple applications at many nuclear power plants and has a four-year time frame. Current United States nuclear plant participants include Limerick, Salem, Sequoyah, TMI, and VC Summer using a system produced by Expert Microsystems Inc., and Harris and Palo Verde, which use a system developed by SmartSignal Inc. Each of these plants is currently using OLM technology to monitor the calibration of process instrumentation. In addition to monitoring implementation, the systems have an inherent dual purpose of monitoring the condition of equipment, which is expected to improve plant performance and reliability. The Sizewell B nuclear power plant in Great Britain is using the OLM services supplied by AMS.

There are currently five major service providers and systems being used for sensor calibration monitoring in nuclear power plants world-wide: Expert Microsystems has developed a system termed SureSense® Diagnostic Monitoring Studio® software; SmartSignal Inc. has developed a product termed eCM™, for equipment condition monitoring; The Halden Reactor Project has developed a project termed Process Evaluation and Analysis by Neural Operators (PEANO); Analysis and Measurement Services Corporation (AMS) has developed a product termed Calibration Extension Program; and Belsim Europe, a Belgium company, markets a data reconciliation product called VALI which has not been used in the US for sensor calibration monitoring in NPPs to date.

Expert Microsystem licensed an MSET based monitoring system from Argonne National Laboratory and teamed with EPRI to develop and test a sensor calibration monitoring system for nuclear power plants implementation. Recently (2004), intellectual property issues over MSET have caused Expert Microsystem to replace the MSET algorithm with another kernel technique termed Expert State Estimation Engine (ESEE) in their SureSense® Diagnostic Monitoring Studio® software. The EPRI implementation program tested the SureSense system on six nuclear power plants including Harris, Limerick, Salem, Sequoyah, TMI and VC Summer. SmartSignal also licensed the MSET technology from Argonne National Laboratory. They have implemented their system on all three Palo Verde Nuclear Units for equipment condition monitoring. The technology has detected a RCS hot leg temperature sensor failure and a reactor coolant pump seal failure. At the time of this writing, Arizona Public Service has not decided whether the cost benefit analysis warrants a license amendment for calibration extension while VC Summer has indicated their intentions to submit theirs for licensing approval.

To obtain the full rewards of on-line monitoring and condition based maintenance practices, utilities must apply for plant specific license amendments to obtain regulatory approval to amend their technical specifications so that manual calibration frequencies are relaxed. An adequate review of the license amendments requires a sufficient background in the technical details of the on-line monitoring methods. In particular, a thorough understanding of the uncertainty analysis associated with the particular modeling techniques is required. This report was developed with the objective of providing the information needed to understand the critical technical issues associated with the current OLM methods sufficient to support the regulatory review of these systems.

1.1 Organization of this Report

The goal of this report is to provide an overview of the OLM techniques currently being used to reduce the required manual calibration frequency of safety critical instrument channels. This report surveys two of the redundant modeling techniques and three of the non-redundant techniques that are commonly used in the Nuclear Power Industry for on-line monitoring. The redundant techniques are a simple averaging algorithm (Instrumentation and Calibration Monitoring Program (ICMP)) and an advanced factor analysis method (Independent Component Analysis (ICA)). The non-redundant methods are a kernel-based method (Multivariate State Estimation Technique (MSET)), neural network-based methods (Process Evaluation and Analysis by Neural Operators (PEANO) and the University of Tennessee Auto Associative Neural Network (AANN)), and a transformation method (Non-Linear Partial Least Squares (NLPLS)). This report provides a review of the basic theory behind these models, so that the techniques and their associated assumptions can be better understood. This report offers a comparison of the three non-redundant techniques based on several of their performance indicators. Data reconciliation, which can be used to improve measurement accuracy, is also discussed. Although there are no known uses of this technology for sensor calibration monitoring, data reconciliation techniques have recently been proposed for such use in Europe.

This report examines the model predictive uncertainty. The report provides a brief description of empirical uncertainty and its sources. The analytical methods for prediction interval estimation are explained for most of the surveyed OLM techniques. A description of wavelet de-noising is included in this explanation. (Wavelet de-noising is used in the Argonne uncertainty analysis to pre-process the MSET data.) Additionally, the assumptions in the currently used Monte Carlo-based uncertainty predictions strategies are explored.

This report highlights the potential challenges surrounding the application of empirical modeling techniques for OLM. In addition to the predictive uncertainty, the report reveals additional issues that may affect the regulatory approval of these OLM techniques. The report outlines many of the data and modeling assumptions that have yet to be verified. The report also discusses the issues with the overall OLM concept, rather than the empirical modeling techniques. These issues include the financial considerations of OLM, the employee training, the software verification and validation process, and OLM's effect on other safety related requirements.

This report also contains an appendix that is organized in four sections. The appendix is based on the publications and technical reports that provided the most relevant and current references on OLM techniques and theory. The list of these documents is found at the front of the appendix. A matrix is then provided which cross-references each document with the NRC requirements found in the NRC SER on this topic [NRC 2000]. The subsequent section includes a short summary that describes how the reviewed documents pertain to each of the NRC SER requirements. Finally, a short synopsis of each of the relevant documents is provided. The summary of each document focuses on the aspects of the document that would be most relevant to a license review.

Volume II of this report will provide an independent evaluation of the application of OLM techniques to reduce the required manual calibration frequency of safety critical instrument channels. The follow on report will include a theoretical basis for the analysis of the model predictive uncertainty. The empirical prediction models, which currently use MSET, will be theoretically evaluated to determine their assumptions. Additionally, the assumptions in the currently used Monte Carlo based uncertainty predictions strategies will also be evaluated. The discussion of uncertainty in section H.4.3 of EPRI TR-104965 argues that the past MSET performance and a Monte Carlo analysis will provide the required evidence [EPRI 2000]. However, determining the predictive uncertainty is much more complicated than addressed in the EPRI paper. A complete understanding of the statistical models and their associated uncertainty analysis is essential.

NUREG/CR-5903, *Validation of Smart Sensor Technologies for Instrument Calibration Reduction in Power Plants*, was published in 1993. In 1995 the follow-up report, NUREG/CR-6343, *On–Line Testing of Calibration of Process Instrumentation Channels in Nuclear Power Plants*, was published. Both of these reports discussed the state of the art of OLM at that time. The reports focus on a three-year comprehensive study contracted with the NRC to determine the validity of on-line monitoring. The study involved both laboratory and in-plant validation tests. The first report in the series, NUREG/CR-5903, *Validation of Smart Sensor Technologies for Instrument Calibration Reduction in Power Plants*, outlines the study's goals and provides a full description of the data acquisition system used in the study. The second report, NUREG/CR-6343, *On –Line Testing of Calibration of Process Instrumentation Channels in Nuclear Power Plants*, summarizes the results from the study which support the feasibility of on-line monitoring for assessing an instrument's calibration while the plant is operating.

Although these NUREG/CRs provide an excellent foundation of OLM theory, they do not discuss the newer OLM techniques, such as MSET. In fact, many of the process estimation techniques considered in these NUREG/CRs have since become outdated and are no longer candidates for OLM applications. The NUREG/CRs also do not address the subject of model predictive uncertainty. It became apparent after the NRC's review of OLM that a new report was needed to describe the current OLM techniques, as well as to address the critical issues surrounding the regulatory approval of OLM, such as model uncertainty. While the prior OLM

NUREG/CRs still are invaluable references, this report examines the current state of the art in OLM technology.

1.2 Background of Activities

An abundance of OLM research has been conducted and published by national laboratories, universities, utilities, and private companies. The Electric Power Research Institute (EPRI) has managed several programs in this area. Early EPRI research included the development of the *Instrument Calibration and Monitoring Program* (ICMP) for monitoring physically redundant sensors [EPRI TR-103436-V1 and V2, 1993a and b]. Subsequent work expanded to monitoring both redundant and non-redundant instrument channels.

EPRI research and development in the 1990s resulted in Topical Report TR-104965, *On-Line Monitoring of Instrument Channel Performance*, developed by the EPRI/Utility On-Line Monitoring Working Group and published in September of 1998. This report focused on the generic application of on-line monitoring techniques to be used as a tool for assessing instrument performance. It proposed to relax the frequency of instrument calibrations required by the U.S. nuclear power plant Technical Specifications (TS) from once every fuel cycle to once in a maximum of eight years based on the on-line monitoring results.

In December of 1999 the NRC issued a draft safety evaluation report (SER) on TR-104965. Later, in August 1999, EPRI published an overview of TR-104965 and met with the NRC staff on February 16 and 17, 2000, to discuss the draft SER. In March of 2002, EPRI released TR-104965-R, which was a revision that incorporated comments on the draft SER. Finally, in July 2000, the U.S. Nuclear Regulatory Commission's Office of Nuclear Reactor Regulation issued a safety evaluation report (SER) on the topical report. A summary of this report is given in the following section.

In 2000, EPRI formed the Instrument Monitoring and Calibration (IMC) Users Group with four objectives. The first objective was to demonstrate OLM technologies in operating nuclear power plants for a variety of systems and applications. A second objective was to verify that OLM is capable of identifying instrument drift and failure under a variety of conditions. The last objectives were to assist participating plants with on-site implementation and to document results. The On-Line Monitoring Implementation Users Group was formed in mid 2001 to demonstrate OLM in multiple applications at many nuclear power plants and had a four-year time frame. Current (2005) U.S. nuclear plant participants include Limerick, Salem, Sequoyah, TMI, and VC Summers, which use a system produced by Expert Microsystems Inc. (expmicrosys.com), and Harris and Palo Verde, which use a system developed by SmartSignal Inc. (smartsignal.com). In Great Britian, Sizewell B is using the services of Analysis Measurement and Analysis Services (ams-corp.com) to monitor the calibration of their safety critical sensors.

Expert Microsystem licensed an MSET based monitoring system from Argonne National Laboratory and teamed with EPRI to develop and test a sensor calibration monitoring system for nuclear power plants implementation. Recently (2004), intellectual property issues over MSET have caused Expert Microsystem to replace the MSET algorithm with another kernel technique termed Expert State Estimation Engine (ESEE) in their SureSense® Diagnostic Monitoring Studio® software. The EPRI implementation program tested the SureSense system on six nuclear power plants including Harris, Limerick, Salem, Sequoyah, TMI and VC Summer.

SmartSignal also licensed the MSET technology from Argonne National Laboratory. They have implemented their system on all three Palo Verde Nuclear Units for equipment condition monitoring. The technology has detected a RCS hot leg temperature sensor failure and a reactor coolant pump seal failures. At the time of this writing, Arizona Public Service has not decided whether the cost benefit analysis warrants a license amendment for calibration extension while VC Summer is expected to submit theirs by the end of the summer of 2005.

Each of these plants is currently using OLM technology to monitor the calibration of process instrumentation. In addition to monitoring instrumentation, the systems have an inherent dual purpose of monitoring equipment condition, which is expected to improve plant performance and reliability. Several plants, which are participants in the EPRI On-Line Monitoring (OLM) Project, are moving towards implementation of these new technologies, which will require regulatory approval in the form of a license amendment.

1.3 Regulatory Review Summary

As discussed above, in 1998, the Electric Power Research Institute (EPRI) published Topical Report TR-104965, On-Line Monitoring of Instrument Channel Performance, developed by the EPRI/Utility On-Line Monitoring Working Group. This report focused on the generic application of on-line monitoring techniques to be used as a tool for assessing instrument performance. It proposed to relax the frequency of instrument calibrations required by the U.S. nuclear power plant Technical Specifications (TS) from once every fuel cycle to once in a maximum of eight years based on the on-line monitoring results. In 2000, the U.S. Nuclear Regulatory Commission's Office of Nuclear Reactor Regulation issued a safety evaluation (SE) based upon this report. The safety evaluation specifically states that it only focuses on the generic implementation of on-line monitoring. It does not discuss specific models or provide any of the technical details pertaining to the implementation of on-line monitoring.

1.3.1 Basic Instrument Performance Monitoring System Description

Before discussing the specifics of this safety evaluation, it is necessary to understand the basic setup and function of an on-line monitoring system. The instrument channel calibration monitoring methods presented in this report are empirical in nature. Historical plant data is used to construct the predictive models. Plant data sampled from past operating conditions embodies the normal relationships between the process variables. After the predictive models are

constructed they are put into a monitoring mode to provide the best estimates of process variables for previously unseen data.

Figure 1-1 is a simple block diagram of a basic instrument calibration monitoring system. In this figure a vector of sensor measurements (x) is input to a prediction model, which calculates the best estimates of the sensors (x'). The estimates are compared to the measured values forming differences called residuals (r). A decision logic module determines if the residuals are statistically different from zero and establishes the health or status (s) of each sensor. This module may also use predictive uncertainty values and drift limits to determine the condition of the instrument channel.

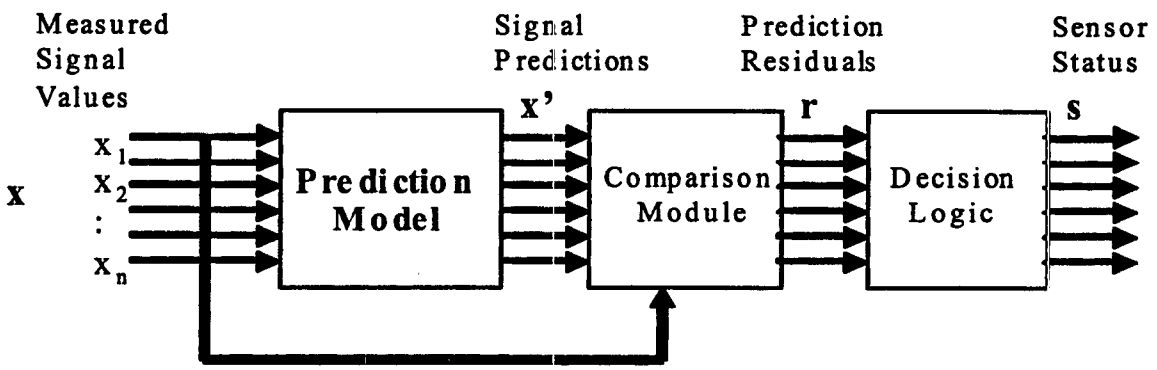

Figure 1-1 Instrument Calibration Monitoring System Diagram

Several empirical modeling techniques have been found suitable for on-line performance monitoring of instrument channels. The modeling techniques can be divided into two major categories: redundant and non-redundant. Redundant modeling techniques use only the measurements from a group of redundant instrument channels to obtain the parameter estimate. An example would be simple averaging. In contrast, the non-redundant modeling techniques use a group of instrument channels that are correlated but not truly redundant to obtain the parameter estimate. These non-redundant modeling techniques are often referred to as plant-wide methods, although they typically focus on only one system or subsystem.

1.3.2 OLM Relationship to Setpoint Calculation

A typical on-line monitoring system implementation collects data from instrument channels during plant operation and processes it with a computer in an off-line fashion. The term on-line means the data is collected while the plant is operating and does not necessarily signify that the monitoring is performed in real time. Regardless of the algorithm employed, the on-line monitoring technique evaluates the deviation of an instrument with reference to its process parameter estimate as determined by one of the predictive algorithms. A determination is then

made as to the instrument channel condition. The instrument channel state is classified into one of the following categories:

- The performance is acceptable,
- The instrument must be scheduled for calibration, or
- The instrument channel is inoperable.

The residual between the process estimate from the OLM model and the sensor's output is used to assess the sensor's calibration status. Figure 1-2 diagrams the sensor's operating states.

```
|
|       Instrument inoperable
|
|------------------------------------------ ADVOLM (allowable deviation value for on-line monitoring)
|                                           Positive direction with reference to PE
|       Routine calibration
|       scheduling band/region
|------------------------------------------ MAVD (maximum acceptable value of deviation)
|                                           Positive direction with reference to PE
|       Acceptable band/region
|
|------------------------------------------ PE (process parameter estimate) at operating point
|
|       Acceptable band/region
|
|------------------------------------------ MAVD (maximum acceptable value of deviation)
|                                           Negative direction with reference to PE
|       Routine calibration
|       scheduling band/region
|
|------------------------------------------ ADVOLM (allowable deviation value for on-line monitoring)
|                                           Negative direction with reference to PE
|       Instrument inoperable
|
```

Figure 1-2 Deviation Zones of Sensor Status

The maximum acceptable value of deviation (*MAVD*) and allowable deviation value for on-line monitoring (*ADVOLM*) are the conservative limits that are used to identify the onset of a drift problem. These limits should be specified by a licensee and supported with a technical basis. NUREG/CR-6343 [1995] states that OLM is only concerned with sensor and rack drift (both time dependent). Since both of these uncertainty components are systematic in nature, the residual can be smoothed to obtain its systematic component. If the residual reaches the MAVD then the instrument is scheduled for recalibration at the next outage. However, if the residual's absolute value continues to increase and the ADVOLM limit is reached, then the instrument is declared inoperable. At this point, there is no confidence that the channel has not exceeded its drift allowance, and corrective action must be taken. Thus, the determination of the ADVOLM is a critical issue for OLM. NUREG/CR-6343 [1995] also suggests using sensor drift allowance for the ADVOLM.

Current EPRI OLM implementation guidelines do not consider altering the trip setpoints. They simply suggest using OLM as a tool to determine if the actual sensor drift has gone past the limit allowable in the setpoint analysis. Because of the relationship between setpoints and on-line sensor calibration monitoring, a brief explanation of setpoint methodologies is given. For a more detailed description, consult the NRC letter of September 7, 2005 to the NEI Setpoint Methods Task Force (ML052500004) and *Regulatory Guide 1.105*. Regulatory Guide 1.105 is being revised at this time.

Regulatory Guide 1.105 establishes a method acceptable to the NRC staff for complying with the NRC's regulations for ensuring that setpoints for safety-related instrumentation are within the technical specification limits, which are established to protect the safety limits. The analytical limit is a measured or calculated variable established by the safety analysis to ensure that a safety limit is not exceeded. The analytical limit takes into account events and parameters, such as process delays and rod insertion times that may cause the plant to exceed the safety limit even when shutdown or protective action events are triggered. The trip setpoint is then a conservative value below the analytical limit for actuation of the final setpoint device to initiate protective action. The Limiting Trip Setpoint (LSP) is the calculated value representing the least conservative trip setpoint that will ensure protection of the analytical limit. The LSP is the limiting safety system setting as defined in *10 CFR 50.36(c)(1)(ii)(A)*.

There are several methods of determining trip setpoints which have historically been acceptable to the NRC. One of these methods involves subtracting the instrument channel uncertainty from the analytical limit to solve for the trip setpoint (TS).

$$TS = AL \pm (CU + \text{margin}), \qquad (1.3.2.1)$$

where TS is the trip setpoint
AL is the analytical limit,
CU is the channel uncertainty,

and the margin is an amount that can be chosen by the user to make the setpoint more conservative.

The channel uncertainty is the total uncertainty at a designated point in the channel. It takes into account the process measurement uncertainty, the primary element accuracy, the total bias, and the total random uncertainty of all modules [ANSI/ISA–67.04.01 2000]. The module uncertainties are comprised of the total uncertainty associated with:

- Module Temperature Effects
- Module Pressure Effects
- Environment Effects (Accident)
- Process Measurement Effects (PM)
- Calibration Uncertainty (CE)
  - Measuring and test equipment uncertainty (M&TE)
  - Calibration tolerance: tolerance of the width of the "as left" band
- Drift
- Module Power Supply Variations
- Consideration for Digital Signal Processing
- Insulation Resistance Effects

The channel uncertainty can be then calculated using the statistical square root sum of squares (SRSS) method. The form of this equation is as follows:

$$Z = \pm\sqrt{\left(A^2 + B^2 + C^2\right) + \left(D + E\right)^2} \pm |F| + L - M \qquad (1.3.2.2)$$

where Z is the total uncertainty,
A, B, and C are random and independent terms that have been mean centered,
D & E are mean centered dependent terms,
L & M are biases with known sign,
F is all abnormally distributed uncertainties and/or biases with unknown signs.

The actual value or allowance of each uncertainty element is stipulated in the plant's setpoint calculation documentation. These values are derived from numerous sources, such as manufacturer and vendor specifications, test reports, and historical plant data analyses. The uncertainty element is also classified as either random, bias, or abnormally distributed so that it can be correctly combined in the channel uncertainty calculation. The allowance between the limiting trip setpoint and a deviation limit (the limiting amount of acceptable deviation between the previous as left value and the as found value for a channel beyond which the instrument loop is not performing in accordance with the uncertainty calculation) contains the portion of the instrument channel being tested during the surveillance interval (monthly, quarterly, or refueling). This portion is comprised of only the drift allowance, the instrument calibration

uncertainties, and the instrument uncertainties during normal operation, as measured during testing.

The allowance between the limiting trip setpoint and the deviation limit is related to OLM. The uncertainties associated with calibration effects are what an online monitoring program is evaluating. Thus, the sensor calibration accuracy (SCA), sensor measurement and test equipment accuracy (SMTE), and sensor drift (SD) terms must be included in OLM's ADVOLM. These terms are used in calculating the limiting trip setpoint. Therefore, when using them to find the ADVOLM, the terms must have the same values and be combined in the same manner (some plants have them as independent variables, while others assume they are dependent) as outlined in the individual plant's setpoint calculation documentation.

A perceived complication with using these terms in the determination of the ADVOLM is the fact that some plants may choose not to perform OLM on a continual basis. In this case, the OLM method can not make use of the entire drift allowances in setting the ADVOLM, but can only use a percentage of it, leaving an amount for the sensor to drift until the next surveillance.

The SD is often expressed as the design or specification allowance for drift at a stated calibration interval, which is generally the interval between refueling outages. If OLM is not conducted continuously, then the full SD value cannot be used because there is still the possibility that the sensor will drift before the next surveillance. For instance, if OLM calibration assessment is performed quarterly, then the SD value is scaled from its original value, which gives the drift allowance during the entire fuel cycle, to a value that subtracts off the small drift allowance for the time between surveillances. In this example, where we assume linear drift, if the fuel cycle was 18 months and OLM surveillance was carried out every 3 months, then the allowed SD value would have to be scaled to $\frac{18mo - 3mo}{18mo} = \frac{15}{18}$ of the SD value used in the plant's setpoint calculations.

Besides the SCA, SMTE, and SD, the OLM ADVOLM must also take into account the unique uncertainties that arise from OLM. These additional terms include the single point monitoring penalty (SPMA) and the uncertainty associated with the process estimate (OLMPE). These terms are mean-centered independent terms that describe uncertainties, which limit the allowable sensor drift permitted by the calibration effects. The generic penalties for single point monitoring are given in EPRI topical report 104965 [EPRI 2004]. The predictive uncertainty of the OLM model is the focus of Chapter 5 in this NUREG/CR. Since the single point monitoring penalty and the process estimate uncertainty limit the drift allowance, these terms are subtracted, giving the channel less room to operate. Oftentimes, the terms are presented graphically through the use of prediction intervals. However, since both terms are a single value they can easily be encompassed into the ADVOLM calculation. By including these additional terms, the ADVOLM can now be calculated with the following equation if the SD, SMTE, and SCA are dependent parameters:

$$ADVOLM = \pm\sqrt{\left((SD^{*} + SMTE + SCA)^{2} - OLMPE_{UNC}^{2} - SPMA^{2}\right)} \quad (1.3.2.3)$$

or with:

$$ADVOLM = \pm\sqrt{\left(SD^{*2} + SMTE^{2} + SCA^{2} - OLMPE_{UNC}^{2} - SPMA^{2}\right)} \quad (1.3.2.4)$$

if SD, SMTE, and SCA are independent parameters,

where: *SD** is the sensor drift scaled to account for the OLM surveillance interval,
SMTE is the sensor measurement and test equipment accuracy,
SCA is the sensor calibration accuracy,
OLMPE is the maximum expected uncertainty of the parameter estimate from the OLM model,
and *SPMA* is the single point monitoring allowance to account for monitoring a small operating space for an extended period.

After calculating the ADVOLM, the MAVD can be established using engineering judgment. When the residual exceeds the MAVD limit, then a calibration check is necessary. Thus, the MAVD should be a value slightly less than the ADVOLM that alerts the user to a potential drift problem, while still allowing a sensor to function in its normal operating range.

To summarize, establishment of the *ADVOLM* and *MAVD* in no way alters or changes the setpoint calculation [EPRI 2004c]. The *ADVOLM* and *MAVD* also are unaffected by which setpoint method is used. For more about the different methodologies of setpoint calculation, the reader is referred to ISA-RP67.04.02, "Methodologies for the Determination of Setpoints for Nuclear Safety-Related Instrumentation" [ISA-RP67.04.02, 2000] and NRC Regulatory Guide 1.105. The *SD, SMTE*, and *SCA* are taken from the instrument loop uncertainty calculations and should be correctly combined with the unique OLM uncertainties as either independent or dependent parameters.

Plants should not attempt to remove the *SD, SMTE*, and *SCA* from the setpoint calculations. If these components were removed from the setpoint calculations then they would need to be removed from the ADVOLM drift allowances. This would remove any margin for sensor drift before the instrument would need to be declared inoperable. Thus, the only practical application of OLM calls for the setpoints to remain unchanged.

The true instrument status cannot be determined unless the predictive uncertainty, or *OLMPE*, is properly specified. Figure 1-3 illustrates the importance of quantifying the predictive uncertainty of the OLM technique in relation to determining the sensor status.

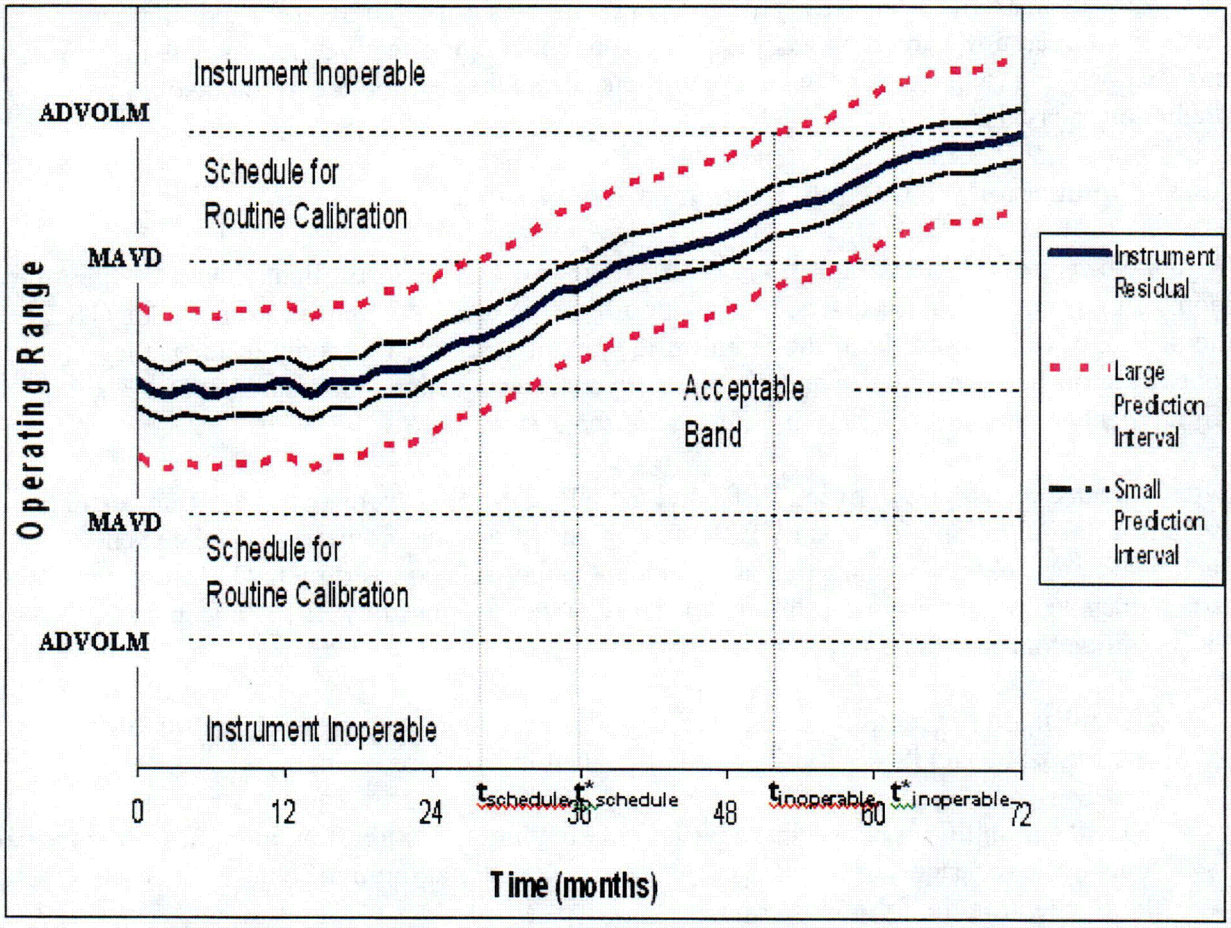

Figure 1-3 Uncertainty Impact on Sensor Operating Region

This figure shows the residual between the process estimate and the actual instrument measurement. The instrument is shown over a six year period and exhibits a slight drift in the positive direction. In this figure, rather than having the uncertainty of the process estimate incorporated into the *ADVOLM* and *MAVD*, it is accounted for by the 95%/95% prediction interval, which are applied to the residual. (See Chapter 5 of this report for a more in-depth discussion of model uncertainty and prediction intervals.) Figure 1-4 displays two separate prediction intervals, one in which the predictive uncertainty is large and the other with a much smaller uncertainty. Examination of the figure indicates that with the larger uncertainty interval, the instrument must be scheduled for calibration at time $t_{schedule}$ and is considered inoperable at time $t_{inoperable}$. However, with the smaller uncertainty, the instrument is not scheduled for calibration until time $t^*_{schedule}$ and is not declared inoperable until time $t^*_{inoperable}$. In this case, the difference between the corresponding times values of the large and small prediction intervals is on the order of almost a year. This fact means that with a smaller uncertainty the instrument has much more room to drift until any action must be taken. With smaller uncertainty, it becomes more likely that if an instrument does drift there will be sufficient time to schedule it for calibration at a routine outage rather than having to declare it inoperable. Commonly, the

C01

predictive uncertainty is described as shrinking the acceptable band. As the uncertainty increases, the instrument has less space to operate in the acceptable band. With too great of predictive uncertainty, an OLM technique may be rendered ineffective, because the instrument's normal operating range no longer falls within the acceptable region due to the instrument's large prediction intervals.

1.3.3 Summary of NRC Safety Evaluation Review

With the basics of OLM explained, the NRC's review of on-line instrument channel calibration monitoring is now considered. The remainder of this section is condensed from the NRC SER. In the SER, the NRC did not limit the monitoring systems to a specific model. Rather, they considered on-line surveillance and diagnostic systems as a general class and based their requirements on the functional requirements for the system.

After extended discussion between EPRI and the NRC, the NRC considered the changes to the Technical Specification proposed by EPRI to implement on-line monitoring. The current Technical Specifications require that all redundant safety-related instruments be calibrated once each fuel cycle (i.e., traditional calibration). The changes proposed by EPRI in response to the NRC's initial concerns include:

1. Establish on-line monitoring as an acceptable procedure for assessing instrument performance and its calibration while the plant is in its normal operating mode.

2. On-line monitoring be used as a basis for extending the calibration interval from once per fuel cycle for each safety related sensor to once in a maximum of eight years by implementing the following processes:

    a. At least one redundant sensor will be calibrated each fuel cycle.

    b. For "n" redundant sensors, all sensors will be calibrated every "n" fuel cycles.

    c. Sensors that are identified as out of calibration by the on-line monitoring process will also be calibrated as necessary.

Hence, traditional calibration checks would be replaced by an on-line calibration checks and a "calibrate as required" approach.

During initial review of EPRI's proposed Technical Specification changes, the NRC identified the following deficiencies of the proposed calibration monitoring technologies:

1. They do not monitor instrument performance over its full range including its "trip set point" (TSP).

2. They compare instrument readings to predictions that are less accurate than reference values used in traditional calibration checks.

3. They do not provide accuracy traceable to standards.

4. They do not allow frequent physical inspection of the instrument or allow technicians to observe instrument anomalies. This may impact response time testing requirements.

Because of these deficiencies, the NRC concluded that on-line monitoring may be unable to verify an instrument's performance adequately to establish its operability, thereby degrading the plant safety. EPRI and several utilities responded to the NRC's concerns with the following arguments:

1. For assessing the capability of on-line monitoring to perform functions either better or as well as those performed by traditional calibration, functions should be evaluated aggregately rather than one function at a time.

2. While slightly more uncertainty is associated with the process parameter estimate than with a simulated reference input traceable to NIST, the accuracy of the process parameter estimate is sufficient for its proposed purpose, which is to provide a reference value against which subsequent drift could be measured. Also at least one channel would be calibrated during each outage by a method traceable back to NIST Standards. Furthermore, instrument performance would be monitored by on-line monitoring more frequently than by traditional means.

3. The uncertainties associated with the process parameter estimate will be quantitatively bounded and accounted for in either the on-line monitoring acceptance criteria or the applicable set point and uncertainty calculations.

4. EPRI believes that, taken as a whole, the on-line monitoring technique is superior to traditional calibration and provides greater assurance of instrument operability throughout an operating cycle. V. C. Summer Nuclear Station representatives stated that they had been using the proposed on-line technique (ICMP) for monitoring instrument performance for the last eight years and found that the benefits were overwhelming and outweighed the insignificant degradation in plant safety due to the deficiencies.

After an extensive exchange of views, the NRC issued the following 14 requirements for online monitoring systems.

1. The submittal for implementation of the on-line monitoring technique must confirm that the impact of the deficiencies inherent in the on-line monitoring technique (inaccuracy in process parameter estimate single-point monitoring and untraceability of accuracy to standards) on plant safety be insignificant, and that all uncertainties associated with the

process parameter estimate have been quantitatively bounded and accounted for either in the on-line monitoring acceptance criteria or in the applicable set point and uncertainty calculations.

2. Unless licensees can demonstrate otherwise, instrument channels monitoring processes that are always at the low or high end of an instrument's calibrated span during normal plant operation must be excluded from on-line monitoring programs.

3. The algorithm used for on-line monitoring must be able to distinguish between the process variable drift (actual process going up or down) and the instrument drift and to compensate for uncertainties introduced by unstable processes, sensor locations, non-simultaneous measurements, and noisy signals. If the implemented algorithm and/or its associated software cannot meet these requirements, administrative controls, including the guidelines in Section 3 of the topical report for avoiding a penalty for non-simultaneous measurements may be implemented as an acceptable means to ensure that these requirements are met satisfactorily.

4. For instruments that were not included in the EPRI drift study, the value of the allowance or penalty to compensate for single-point monitoring must be determined by using the instrument's historical calibration data and by analyzing the instrument performance over its range for all modes of operation, including startup, shutdown, and plant trips. If the required data for such a determination is not available, an evaluation demonstrating that the instrument's relevant performance specifications are as good as or better than those of a similar instrument included in the EPRI drift study, will permit a licensee to use the generic penalties for single point monitoring given in EPRI topical report 104965.

5. Calculations for the acceptance criteria defining the proposed three zones of deviation ("acceptance," "needs calibration" and "inoperable") should be done in a manner consistent with the plant-specific safety-related instrumentation setpoint methodology so that using on-line monitoring technique to monitor instrument performance and extend its calibration interval will not invalidate the setpoint calculation assumptions and the safety analysis assumptions. If new or different uncertainties should require the recalculation of instrument trip setpoints, it should be demonstrated that relevant safety analyses are unaffected. The licensee should have a documented methodology for calculating acceptance criteria that are compatible with the practice described in regulatory Guide 1.105, Setpoints for Safety-Related Instrumentation, and the methodology described acceptable industry standards for trip set point and uncertainty calculations.

6. For any algorithm used, the maximum acceptable value of deviation (MAVD) shall be such that accepting the deviation in the monitored value anywhere in the zone between parameter estimate (PE) and MAVD will provide high confidence (level of 95%/95%) that drift in the sensor-transmitter and/or any part of an instrument channel that is common to the instrument channel and the on-line monitoring loop is less than or equal to

the value used in the setpoint calculations for that instrument. (Chapter 4 of this report gives more information on constructing 95%/95% confidence and prediction intervals.)

7. The instrument shall meet all requirements of the above requirement 6 for the acceptable band or acceptable region.

8. For any algorithm used, the maximum value of the channel deviation beyond which the instrument is declared "inoperable" shall be listed in the technical specifications with a note indicating that this value is to be used for determining the channel operability only when the channel's performance is being monitored using an on-line monitoring technique. It could be called "allowable deviation value for on-line monitoring" (ADVOLM) or whatever name the licensee chooses. The ADVOLM shall be established by the instrument uncertainty analysis. The value of the ADVOLM shall be such to ensure:

   a. that when the deviation between the monitored value and its PE is less than or equal to the ADVOLM limit, the channel will meet the requirements of the current technical specifications and the assumptions of the setpoint calculations and safety analyses are satisfied; and

   b. that until the instrument channel is recalibrated (no later than the next refueling outage), actual drift in the sensor-transmitter and/or any part of an instrument channel that is common to the instrument channel and the on-line monitoring loop will be less than or equal to the value used in the setpoint calculations and satisfy other limits defined in 10-CFR50.36 as applicable to the plant-specific design for the monitored process variable.

9. Calculations defining alarm setpoint (if any), acceptable band, the band identifying the monitored instrument as needing to be calibrated earlier than its next scheduled calibration, calibrating the maximum value of deviation beyond which the instrument is declared "inoperable," and the criteria for determining the monitored channel to be an outlier, shall be performed to ensure that all safety analysis assumptions and assumptions of the associated setpoint calculations are satisfied and the calculated limits for the monitored process variables specified by 10CFR50.36 are not violated.

10. The plant-specific submittal shall confirm that the proposed on-line monitoring system will be consistent with the plant's licensing basis, and that there continues to be a coordinated defense-in-depth against instrument failure.

11. Adequate isolation and independence, as required by Regulatory Guide 1.75, GDC 21, GDC 22, IEEE Std 279 or IEEE Std 603, and IEEE Std. 384, shall be maintained between the on-line monitoring devices and class 1-E instruments being monitored.

12. (A) QA requirements delineated in 10CFR Part 50, Appendix B, shall be applicable to all engineering and design activities related to on-line monitoring, including design and implementation of the on-line system, calculations for determining process parameter estimates, all three zones of acceptance criteria (including the value of the ADVOLM), evaluation and trending of on-line monitoring results, activities (including drift assessments) for relaxing the current TS-required instrument calibration frequency from "once per refueling cycle" to "once per maximum period of eight years," and drift assessments for calculating the allowance or penalty required to compensate for single-point monitoring.

    (B) The plant-specific QA requirements shall be applicable to the selected on-line monitoring methodology, its algorithm, and the associated software. In addition, software shall be verified and validated and meet all quality requirements in accordance with NRC guidance and acceptable industry standards.

13. All equipment (except software) used for collection, electronic transmission, and analysis of plant data for on-line monitoring purposes shall meet the requirements of 10CFR Part 50, Appendix B, Criterion XII, Control of Measuring and Test Equipment. Administrative procedures shall be in place to maintain configuration control for the on-line monitoring software and algorithm.

14. Before declaring the on-line monitoring system operable for the first time, and just before each performance of the scheduled surveillance using an on-line monitoring technique, a full-features function test, using simulated input signals of known and traceable accuracy, shall be conducted to verify that the algorithm and its software perform all required functions within acceptable limits of accuracy. All applicable features shall be tested.

Appendix A.3 provides a more in-depth discussion of each of these requirements. Appendix A.2 provides a matrix that cross-references each requirement to the documents that are most relevant to it. The NRC ended the safety evaluation with an optimistic tone. The NRC's conclusions included the following:

1. The staff concluded that the generic concept of an on-line monitoring technique as presented in the topical report is acceptable for on-line tracking of instrument performance.

2. The staff agrees with the topical report's conclusion that on-line monitoring has several advantages, including timely detection of degraded instrumentation.

3. The staff believes that on-line monitoring can provide information on the direction in which instrument performance is heading and in that role, on-line monitoring can be useful in preventive maintenance activities.

4. Although the proposed on-line monitoring technique compared to traditional calibration process will render results with less accuracy, the staff finds EPRI's conclusion acceptable that accuracy rendered by the process parameter estimate is sufficient to assess instrument operability.

5. Compared to traditional calibration once per refueling outage, the on-line monitoring technique when taken as a whole, provides higher assurance of instrument operability throughout a plant operating cycle.

These conclusions, along with the issued requirements, outline the process that a utility must follow to implement OLM techniques to extend the calibration intervals of safety related nuclear instrumentation.

2. REDUNDANT SENSOR MONITORING

Several on-line monitoring techniques have been developed that calculate the parameter estimate using only the measurements from a group of redundant instrument channels. These techniques are commonly referred to as redundant sensor calibration monitoring models. In this context, the term redundant describes instrument channels that measure the same process parameter over a similar operating range. In general, the redundant techniques are more intuitive than the non-redundant techniques. The redundant models may also be easier to troubleshoot. This simplicity may cause regulatory bodies to favor the redundant techniques over the less straightforward non-redundant models. A perceived weakness of the redundant techniques is that, unlike many of the non-redundant techniques, most redundant techniques are unable to detect common mode failures that manifest themselves at a common rate during the fuel cycle. However, at the end of each fuel cycle one of the sensors will undergo a manual calibration check which will reveal a common mode failure if one exists. Current calibration procedures also only reveal these types of common mode failures at the end of a fuel cycle. Additionally, these types of common mode failures are extremely uncommon with few occurrences over several decades of fleet operational experience. In fact, the only noted case of common mode sensor failure occurred in a group of redundant Rosemount pressure transmitters at Northeast Utilities' Millstone Unit 3 between March and October 1987 [NUREG/CR-6343 1995]. In this case, fill-oil gradually leaked from the transmitter's sealed sensing module, causing the entire group to drift in the same direction. Although this incident did not cause the plant to operate outside its design limits, it did raise industry concern over common mode failure and how it can be detected early enough so that it does not impact plant safety.

The simplest redundant technique is simple averaging. However, in simple averaging, if one sensor degrades, the prediction will also degrade but at a lower rate. This undesirable trait of a prediction drifting because an input to the model is drifting is termed *spillover*. More advanced techniques are robust to drifting inputs. The following sections give an overview of two redundant techniques that are more robust to disturbances in the inputs: ICMP and ICA. Many studies have concluded that these techniques appear to be well suited for on-line sensor calibration monitoring. As do the plant wide methods, these techniques use historical plant data that is assumed to be error free. In practice, it is necessary to preprocess the data received from a plant to remove spikes, anomalies, and other erroneous features.

2.1 Instrumentation and Calibration Monitoring Program

The Instrumentation and Calibration Monitoring Program (ICMP) algorithm was developed by the Electric Power Research Institute (EPRI) [EPRI 1993a]. The ICMP monitors nuclear plant channel data and verifies the instrument's performance. In ICMP, a weighted averaging algorithm is used to determine an estimate of the true process parameter. The ICMP algorithm assigns a consistency value, C_i, to each of the signals for each data sample evaluated. This consistency value denotes how much of the signal's measured value contributes to the process estimate. The value is based on the absolute difference between a given sensor and other sensors in the group.

Thus, inconsistent signals contribute less to the process estimate. For example, for a group of three redundant sensors, the consistency value compares the output of each instrument to the output of the other two instruments. If the ith instrument's output is sufficiently close to the output of both of the other instruments, its consistency value, Ci, will be 2. However, if the ith instrument's output is only sufficiently close to one of the other instruments, then Ci will be 1. If the ith instrument's output is not close to either of the two remaining instruments, then the consistency value, Ci, will be 0. Overall, if a signal agrees within a tolerance to another signal in the group they are declared to be consistent and the consistency value for that signal, Ci, is found with equation 2.1.1.

$$If \left| m_i - m_j \right| \leq \delta_i + \partial_j, then\, C_i = C_i + 1 \tag{2.1.1}$$

where C_i = the consistency value of the ith signal,
m_i = the output for signal i,
m_j = the output for signal j,
∂_i = the consistency check allowance for instrument I,
and ∂_i = the consistency check allowance for instrument j.

Equation 2.1.1 iteratively checks the constituency of the output of each instrument in the group to the output of the remaining instruments. The constituency values for the sensors are updated upon each new observation. The values for the consistency check allowances are dependent on the uncertainty present in the signals such as:

$$\left| m_i - m_j \right| \leq 2\delta \tag{2.1.2}$$

After the consistency values are calculated, the ICMP parameter estimate can be calculated as:

$$\hat{x} = \frac{\sum_{i=1}^{n} w_i C_i m_i}{\sum_{i=1}^{n} w_i C_i} \tag{2.1.3}$$

where: $\hat{x}$ = the ICMP parameter estimate for the given data sample
w_i = the weight associated with the ith signal

The weight values are included to allow the user to apply a greater weighting to more accurate or reliable sensors within a redundant group. If there is no preference within the group, all weight values can be set to 1, reducing the equation to:

$$\hat{x} = \frac{\sum_{i=1}^{n} C_i m_i}{\sum_{i=1}^{n} C_i} \tag{2.1.4}$$

The consistency check factor controls the influence of an individual signal on the ICMP parameter estimate. If all sensors are considered equally consistent, then the ICMP estimate is just the simple average of the redundant sensors. If a sensor's consistency value is zero, then it will not influence the parameter estimate. If all sensors are inconsistent then the parameter estimate is undefined.

Once the parameter estimate is calculated, the ICMP algorithm evaluates the performance of each individual sensor relative to the parameter estimate. This is done through the use of an acceptance criterion.

If $|\hat{x} - m_i| \geq a_i$, then m_i has potentially drifted beyond desired limits.

where: a_i = the acceptance criterion for the ith signal

When the deviation between a sensor's measurement and the current parameter estimate exceeds the acceptance criterion, that sensor is considered to have drifted out of calibration. At this point the sensor is assumed to have failed. Note that failing the acceptance criterion does not necessarily disallow the failed sensor's value to influence the ICMP estimate. The consistency check factor must also be exceeded, and it is not necessarily related to the acceptance criterion. The paper, *Monte Carlo Analysis and Evaluation of the Instrumentation and Calibration Monitoring Program*, further details the relationship between the acceptance criteria and the consistency check factor and also provides numerical examples of the ICMP algorithm for varying sensor groups [Rasmussen 2002a].

ICMP software was successfully installed at the Catawba and V.C. Summer Nuclear Stations [EPRI 2000]. Although these plants were using ICMP only as a performance monitoring and troubleshooting tool, they obtained positive results. These results helped to verify ICMP's diagnostic capabilities. The plants did note some of ICMP's inherent shortcomings. For instance, ICMP performed poorly when there was limited instrumentation, as is normally found on the secondary side of a nuclear plant. ICMP also is unable to detect common mode drift failure (where all redundant instruments drift in the same direction at the same rate). However, as current calibration practices offer no protection against common mode failure, ICMP's inability to detect common mode failure should not invalidate the technique.

With regulatory approval, Electricite de France (EdF) has implemented on-line monitoring at all 54 of their nuclear stations. The EdF's chosen OLM technique, a form of redundant channel

averaging, is very similar to ICMP. EdF has reported excellent results with this technique, both in its early detection of sensor drift and in the financial savings it has brought about.

2.2 Independent Component Analysis

Independent Component Analysis (ICA) is a statistical technique in which the observed data are expressed as a linear transformation of latent variables, or "independent components" that are mutually independent [Hyvarinen 2001]. ICA has many potential applications in on-line monitoring. ICA has the capability to separate the true process signal (the signal and the common process noise) from the independent channel noise. With this functionality, ICA could be employed as a data pre-processing, or filtering, tool for empirical techniques, such as MSET. Filtering with ICA guarantees that none of the actual process dynamics are lost. ICA could also be used to obtain the actual process estimate from a group of redundant sensors. Past research has investigated ICA's performance as an actual on-line monitoring process estimation technique with promising results [Ding 2003]. Unlike most other on-line monitoring techniques, ICA process estimates are unaffected by spillover which occurs when drift in one channel degrades the estimates for other channels. This trait alone makes ICA a worthy candidate technique for on-line monitoring.

ICA can be considered a non-Gaussian factor analysis. The central limit theorem (CLT) says that if independent sources are summed, the resulting mixture is more Gaussian than the sources. Hence, to separate the individual sources from the mixture, ICA decomposes the mixture into components that are as far from Gaussian as possible.

The ICA model is expressed as:

$$X = A\,S, \tag{2.2.1}$$

where X is an (n x p) data matrix of n observations from p sensors, S is an (n x p) matrix of p independent components, and A is an (n x n) matrix of unknown constants, called the mixing matrix [Ding 2004]. An ICA algorithm is used to determine a constant (weight) matrix, W, so that the linear transformation of the observed variables,

$$Y = W\,X, \tag{2.2.2}$$

results in the transformed components, yi, being as statistically independent from each other as possible. The maximally non-Gaussian signals, Y, are then assumed to be estimates of the original independent components. In the case of on-line monitoring, one of the independent components is the signal (with the common process noise), and thus the parameter estimate. An ICA algorithm, called FastICA, is most commonly used to accomplish this transformation. This algorithm is readily available for use in Matlab and many other programming languages. The FastICA algorithm uses negentropy as the measurement of the non-Gaussianity of the components. Negentropy is a normalized version of differential entropy. Because the Gaussian

distribution is the most random and least structured of all distributions, it will have the largest entropy. Thus, the negentropy value uses the entropy of a Gaussian distribution to gauge the non-Gaussianity of the distribution in question. The negentropy of a distribution is zero only if the distribution is truly Gaussian. The full theory behind the FastICA algorithm is beyond the scope of this report. Hyvarinen [2001] developed FastICA, and his text provides a complete reference to the algorithm and its theory.

The two ambiguities of ICA are that neither the variances (energies) nor the order of the independent components can be determined. These ambiguities are of concern when performing on-line monitoring because the component containing the parameter estimate needs to be selected and scaled back to its original units. Ding [2004] addresses these ambiguities in his dissertation. His dissertation describes a method to select the component that contains the parameter estimate using the components' correlation to the raw signals (X). Once the component that contains the parameter estimate is selected, a rescaling method that minimizes the error between the component and the raw signals is easily implemented.

The major assumptions of the ICA algorithm are that the data is time invariant and that, at most, one of the components can have a Gaussian distribution. This is because when signals with Gaussian distributions are mixed, they cannot be unmixed. Research has shown that these assumptions generally hold true for nuclear power plant data. Since nuclear power plants usually operate at nearly 100% power, the assumption of time invariant data usually is met. Obviously, when the plant undergoes a significant transient, the data becomes nonstationary and the ICA method fails. However, transient data is often excluded from on-line monitoring estimations, as accounted for by the single-point monitoring penalty. In the ICA on-line monitoring technique developed at the University of Tennessee, a unity check module was implemented to monitor the reliability of the ICA model [Ding 2004]. This implementation allowed for increased system robustness by transitioning to a parity-based estimation technique during off-normal conditions such as transients. The assumption of a single Gaussian noise source is also met during most nuclear power operations. The measurements from each channel contain the process parameter, a common noise source, and independent channel noise sources. Experience has shown that the major individual noise components seldom have a Gaussian distribution. Recall that noise sources are commonly assumed to be Gaussian because when noise sources are added they tend towards Gaussian; this does not imply the original sources were Gaussian.

3. NON-REDUNDANT SENOR MONITORING

Non-redundant models calculate the parameter estimate using the measurements from a group of correlated, but not truly redundant, instrument channels; however, redundant channels may also be in the group being modeled. Non-redundant OLM techniques are capable of modeling processes that redundant techniques cannot, such as the turbine first stage pressure channels, which commonly only has a redundancy of two. Because of their larger size (number of sensors in the model), non-redundant models are also generally less affected by spillover in comparison to redundant models. The following section gives an overview of the three most commonly used non-redundant sensor modeling techniques: MSET, NNLPLS, and AANN. Prior research has concluded that these techniques appear to be practicable for OLM applications [Hines 1998, EPRI 2000, Rasmussan 2000b]. This section also offers a comparison of these three techniques with respect to several important performance considerations necessary to have a system that is accurate, reliable, and easy to use.

All of these non-redundant techniques use historical plant data that is assumed to be error free and cover the entire operating range of the system or process. The data may be filtered, as long as only the independent instrument noise and not the process dynamics is removed. (Filtering techniques are discussed in more detail in Section 5 of this report, as they play an integral role in uncertainty estimation.)

The selection of which sensors to include in the input vector is of great importance for nonredundant models. Experience has shown that models should be constructed with groups of highly correlated sensors resulting in models commonly containing less than 30 signals [EPRI 2004a]. It has been proven that adding irrelevant signals to a model increases the prediction variance while not including a relevant signal biases the estimate [Rasmussen 2003b]. Automated techniques for sensor groupings, which greatly simplify the selection process, have been developed for the MSET model [Hines 2004a]. EPRI Final Report 1003579, On-line Monitoring of Instrument Channel Performance Volume 2, is an excellent reference for selecting OLM model inputs [EPRI 2004b]. This chapter will focus on the modeling algorithms while Chapter 4 will provide an overview of the processes required to implement these modeling techniques for sensor calibration monitoring.

3.1 Multivariate State Estimation Technique (MSET)

Non-parametric regression methods such as kernel regression [Cherkassky 1998] or MSET, which proves to be a kernel regression method in disguise [Zavaljevski 1999], have been used for sensor calibration verification in EPRI pilot studies. Parametric techniques, such as neural networks or linear regression, use data to "train" a model and determine parameters such as regression coefficients or weights to optimize the performance of the modeled input-output relationships. Non-parametric techniques, commonly called memory based techniques, do not compute optimal weights a priori, but instead store all the "training data" and directly use it to compute predictions when a query is made. MSET is a non-linear, nonparametric, kernel

regression technique that utilizes a similarity operator to compare a set of new measurements to a set of prototypical measurements or states [Gross et al. 1998]. This comparison process generates a weight vector that is used to calculate a weighted sum of the prototype vectors to provide an estimate of the true process values. The similarity function uses one of two proprietary similarity/distance operators [Singer 1996]. MSET functions as an autoassociative model, reproducing an estimate of each of a set of measured signals that are provided as inputs to the model. The presented derivation of the MSET algorithm comes from Black [1998] but originated in Singer [1996].

MSET is similar in many regards to multiple linear regression. In linear regression, A, referred to as the prototype matrix, represents a matrix assembled from selected column-wise measurement vectors, and w represents a vector of weights for averaging A to provide the estimated state $\hat{x}$ as follows:

$$\hat{x} = A \cdot w \tag{3.1.1}$$

The column-wise measurement vectors which make up the prototype matrix A are selected by a proprietary technique that is carefully performed to provide a compact, yet representative, subset of a large database of measurements spanning the full dynamic range of the system of interest. If ε represents the difference between an observed state x and the estimated state $\hat{x}$, then the following relations may be constructed:

$$\varepsilon = x - \hat{x} = x - A \cdot w \tag{3.1.2}$$

The least squares solution to the minization of ε yields the following expression for w, (where the left hand factor of the matrix product is known as the recognition matrix):

$$w = \left(A^T \cdot A\right)^{-1} \cdot \left(A^T \cdot x\right) \tag{3.1.3}$$

A chief liability of this linear method is that linear interrelationships between state vectors in A result in conditioning difficulties associated with the inversion of the recognition matrix. MSET avoids this shortcoming by applying nonlinear operators in lieu of the matrix multiplication. These operators generally result in better-conditioned recognition matrices and more meaningful inverses of the recognition matrices.

MSET extends the multiple regression equations to include a non-linear operator as follows:

$$w = \left(A^T \oplus A\right)^{-1} \cdot \left(A^T \otimes x\right) \tag{3.1.4}$$

The '⊕' symbol represents an appropriate similarity operator which is also termed a *kernel*

operator in non-parametric regression [Cherkassky 1998]. A typical kernel operator is the Gaussian operator: $K(u) = (2\pi\sigma)^{1/2} * \exp\left(-u^2/2\sigma^2\right)$. An estimate of the plant states can then be given as:

$$\hat{x} = A \cdot \left(A^T \oplus A\right)^{-1} \cdot \left(A^T \otimes x\right) \tag{3.1.5}$$

Note that the estimate is dependent on a matrix of prototype states A, the current state x, and the choice of kernel operator and its spread constant σ. The most mathematically intensive operation in this equation is the matrix inversion, which can be performed off-line and stored since it does not depend on current input values. This allows MSET to operate in real time, but its implementation may be a periodic surveillance (every 90 days) on previously collected plant data.

3.2 Non-Linear Partial Least Squares (NLPLS)

The Non-Linear Partial Least Squares (NLPLS)-based system consists of a set of inferential models that, when combined, form an autoassociative design. Each parameter to be monitored requires a separate inferential model. An inferential model infers a prediction of a specific sensor's measurement based on the values of correlated sensors. The sensor values that are used as inputs to each inferential model include all sensor values except for the specific sensor being modeled. A schematic of a NLPLS inferential model is provided in Figure 3-1.

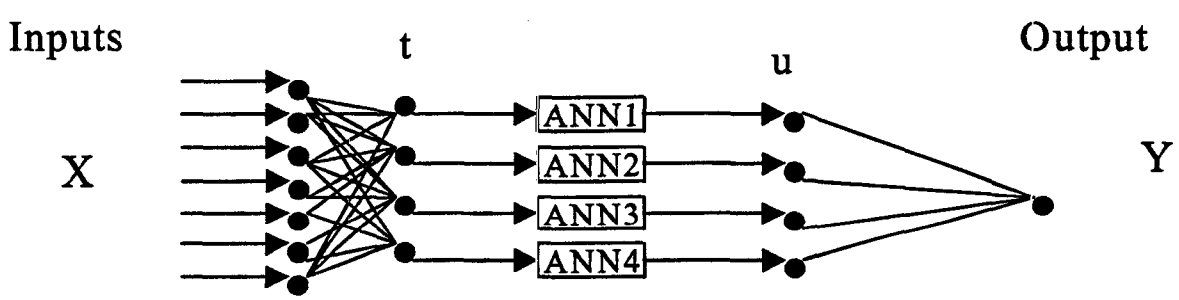

Figure 3-1 NLPLS Inferential Unit Schematic

The theoretical basis for Partial Least Squares (PLS) is explained in detail in many publications and texts [Geladi 1986, Hoskuldsson 1988]. PLS is an iterative algorithm that sequentially decomposes the input data set into orthogonal score vectors. The output data set is also decomposed into a new set of vectors, though orthogonality is not a constraint. The transformations of the input data set and output data set to their respective score vectors, t and u, are derived such that the first set of score vectors explains the maximum covariance between the input data set (X) and output data set (Y). The standard PLS algorithm then prescribes a linear regression of the input score vector onto the output score vector. The variability in the input data set explained by the first input score is then subtracted from the input data set, resulting in an

input residual. Similarly, the variability in the output data set explained by the first output score is subtracted from the output data set, resulting in an output residual. The input and output residuals represent the remaining variability, from which further information about the covariance between the input and output data sets can be extracted. The second set of score vectors is then determined such that the maximum variance in the input residual related to the output residual is captured, with the additional constraint of orthogonality with the previous input score vector. After the second set of score vectors is obtained, the input and output residuals are again reduced by the variability explained by the second set of score vectors. This iterative process continues until the information left in the residual matrices is negligible and can be attributed to noise or unrelated variation with respect to the desired output. Based on the desired accuracy of the model and the level of noise present in the data, the number of input score vectors to be included in the model can be determined.

To extend the PLS algorithm to incorporate non-linear mapping abilities, the linear regression between each pair of score vectors is replaced by Single Input Single Output (SISO) Artificial Neural Networks (ANNs) [Qin 1992]. Each simple SISO contains a single hidden layer with two sigmoidal activation functions, and a single linear output neuron. The number of SISO neural networks required for a given inferential NLPLS model is equal to the number of orthogonal input score vectors retained in the model. It is significantly less than the number of sensors provided at the input and is determined through the evaluation of the prediction errors of a validation data set. Cross-validation training of the simple ANNs is used to prevent the detrimental effects incurred when overtraining an ill-posed problem. A complete derivation of the NLPLS algorithm is not given in this report due to space restrictions but can be found in Rasmussen [2000a].

3.3 Auto-Associative Neural Networks (AANN)

The neural network-based system uses the Auto-Associative Neural Network architecture consisting of an input layer, three hidden layers, and an output layer as recommended by Kramer [1992]. As shown in Figure 3-2, the first of the hidden layers is the *mapping layer* with dimension greater than the number of input/outputs. The second hidden layer is called the *bottleneck layer*. The dimension (number of neurons) of this layer is the smallest in the network. The third hidden layer, called the *demapping layer*, has the same dimension as the mapping layer. Kramer points out that five layers are necessary for such networks in order to correctly model non-linear processes.

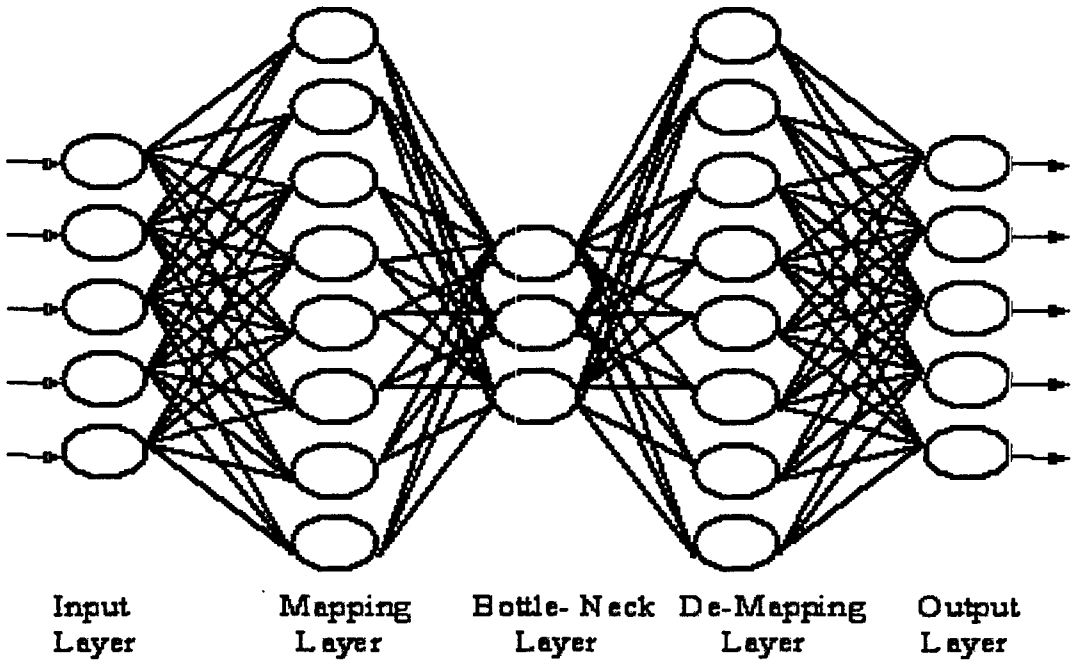

Figure 3-2 Architecture of a Five-Layer Bottlenecked AANN

The mapping-bottleneck-demapping combination forces the network to develop a compact representation of the training data that better models the underlying system parameters. Essentially, the bottleneck layer functions like a non-linear principal component analysis filter that gives a richer representation of the data. The non-linear activation function of the three hidden layers are sigmoidal functions. The network uses a linear output layer and is usually trained with a conjugate gradients algorithm. A more detailed description of AANN development for sensor calibration monitoring can be found in Hines [1998].

3.4 Comparisons

The three non-redundant techniques have been compared and contrasted with respect to several performance indicators. Specifically, the system development effort, the ability for the system to scale up to large (high dimensional) problems, the consistency of the solutions, non-linear modeling capabilities, and the ability for the system to adapt to new operating conditions are considered. In addition to these performance attributes, the techniques' availability on the commercial market and their experience base are compared.

3.4.1 Development Time and Effort

Each system must be developed using a data set that is assumed to contain error-free observations from all expected operating states. The time and oversight required to design and train each type of system varies significantly. It is desired to have a system that requires little or no expert oversight and is trained rapidly.

MSET training is a single-pass (i.e., is not an iterative process) operation, and consists of little more than the operations involved in a single matrix multiplication and an inversion or decomposition. Data selection plays an important role, as the number of operations (and processor time) required per recall is proportional to the product of the number of prototype measurements and the dimensionality of the measurements. Therefore, as a function of the number of signals to be monitored, and the data availability rate, there is an upper limit on the number of patterns that may be included in the prototype measurement matrix. Since the purpose of the prototype matrix is to compactly represent the entire dynamic range of previously observed system states, the patterns that are included must be carefully chosen. ERPI Interim Report 1003661, Plant System Modeling Guidelines to Implement On-line Monitoring, describes the data selection and model training processes for MSET in more detail [EPRI 2004b]. Both the data set selection and the model training can be automated and performed efficiently. In this method the spread constants of the similarity relation must be carefully chosen. This too can be automated. Methods have been published in the open literature for automated variable grouping [Hines 2004a] and model optimization [Hines 2004b, 2005]. The computer time necessary for the automated construction of a system is on the order of minutes.

The Non-Linear Partial Least Squares (NLPLS) algorithm constructs an inferential model for each sensor and combines them into an autoassociative framework. Each inferential model may include a different number of latent variables. The optimal number is chosen through a cross-validation process using a validation data set. Each latent variable has a simple neural network non-liner processor. The training of these networks are iterative processes and use a training algorithm that is designed to produce robust results. All of the development is automated and the construction time is on the order of a few hours [Rasmussen 2000a].

The AANN development is the most involved of the three methods. The architecture, which is defined by the number of hidden neurons in each of the three hidden layers, must be properly chosen. It varies with the number of sensors to be monitored, the redundant information contained in the data set, and the training error goal. Although heuristics can be used to estimate the optimal architecture, no techniques have been proven to be consistent. Training AANNs is a time consuming task that can result in a sub-par performing network due to local minima that occur in the iterative training process. Although research has been performed to automate the system [Xu 1999], the development and training of these models is expected to require some oversight and may take a few days. In fact, a study conducted by the Halden Reactor Project [Fantoni 2002] comparing the AANN and NLPLS methods showed that the two methods had similar performance but the NLPLS model was constructed in half a day versus three days for the AANN model.

3.4.2 Scalability

Scalability is defined as the ability of the system to operate in high dimensional (multiple sensor) spaces. The MSET has no limit on the dimensionality of the input space although better performance can be attained if separate systems are developed for uncorrelated subsets of data.

Since kernel regression is based on the kernel density estimation technique [Cherkassky 1998], high dimensional data can theoretically cause estimation to become inconsistent due to the curse of dimensionality and is very sensitive to the kernel selection. However, since the operating region does not cover all combinations of input values, this is not a practical implementation problem. Additionally, kernel regression can be made consistent by using regularization techniques similar to those used in ridge regression [Usynin 2005].

The NLPLS algorithm has no dimensionality limit and its implementation removes uncorrelated inputs from each inferential model. This prevents system degradation from uncorrelated inputs [Rasmussen 2000a].

The AANN-based system does not have a theoretical limit on the number of network inputs but it does have a practical limit. This limit is on the order of 30 and no research results have been presented with significantly larger numbers of sensor inputs. Researchers at the Halden Reactor Project also use delayed inputs into the model which drastically increases the number of inputs. One of their applications monitored 55 variables with time delays resulting in over a hundred inputs [Fantoni 2002]. When monitoring plants with many sensors, the set of sensors is commonly divided into smaller correlated groups. Automated variable grouping methods have been developed to optimize the model groupings [Hines 2004a].

3.4.3 Consistency of Results (Robustness)

The robustness of OLM models can be quantified as the change in a model output caused by a change in the respective input. A model is considered to be robust if it is insensitive to an error in an input. This is a desirable attribute because it means that a faulty sensor will not affect the model's parameter prediction. A measure of a model's robustness is given by the robust metric:

$$Rob = \frac{\sum_{i=1}^{M} \left| \hat{x}_{i_{disturb}} - \hat{x}_i \right|}{M \cdot \Delta}, \qquad (3.4.3.1)$$

where $\hat{x}_{i_{disturbance}}$, $\hat{x}_i$ are the predictions made with and without disturbance in the input, M is the number of the disturbed samples, and Δ is the value of the disturbance.

A robustness metric value close to zero indicates that the model provides approximately the same results with and without an input disturbance. This means that the model is robust to input disturbances and will detect them. If the robustness metric of a model is greater than 1, the model cannot be considered to be a robust model. In this case, the model is amplifying the input disturbance.

The data sets used for sensor calibration verification contain strong correlations. One concern

when using highly correlated data is the repeatability and consistency of the results. It is widely known that problems containing highly correlated data, also termed collinear data, may be ill-posed. An ill-posed problem is defined as a problem that has a solution that either does not exist, or is not unique, or is not stable under perturbations of the data. The solutions from data based prediction methods are especially susceptible to small perturbations of the data. Solutions can be made repeatable and stable with regularization methods. A study of regularization methods for inferential sensing has been published [Hines 1999].

Regularization methods have been successfully applied to MSET [Zavaljevski 1999, Gribok 2000, Hines 2005a]. The results of these studies show that without proper regularization MSET and other statistical techniques are sensitive to minor variations in the data. MSET can be regularized using two different methods: the proper choice of the kernel width (similarity function width) regularizes the solution and the use of a regularization parameter in the matrix inversion also regularizes the problem.

NLPLS is a transformation method that transforms the predictor data into a new space where the latent variables are not correlated, but orthogonal. Because of this, NLPLS is not adversely affected by collinear data.

AANNs are the most difficult method to regularize. There are several methods that assist in regularizing the network, but none give totally repeatable results. These methods include training with jitter (noise), Levenberg Marquardt training, weight decay, neuron pruning, cross validation, and Bayesian Regularization [Hines 1999]. When using AANN, the user must realize the difficulties inherent in predicting from collinear data and must take steps to reduce their effects.

Another cause of AANN inconsistent results is the random initialization of weights and biases. Because of local minima inherent in neural network training, several different networks can be constructed that produce similar results on training data but may produce quite different results on test or validation data. Regularization can also reduce these inconsistencies. It should be stated that the inconsistencies noted above may not degrade performance significantly in the vast majority of applications.

3.4.4 Non-Linear Modeling Capabilities

MSET, being a kernel regression technique, is termed a universal function approximator. This means it can model any non-linear function to any desired degree of accuracy, but does not prescribe the required state matrix. Neural networks have also been proven to be universal function approximators but there is no theory that prescribes the correct architecture or the weights and biases necessary to produce the desired solution. Both techniques are extremely accurate at modeling non-linear functions, but the free parameters that give the systems the non-linear abilities also increase the repeatability problems that regularization methods address. When problems are highly non-linear and of limited dimension, neural networks may produce the best results.

NLPLS is a non-linear mapping agent but the original transformation is based on a linear transformation developed to maximize the linear correlation between the latent variable and the signal to be modeled. If the relationship is highly non-linear, the transformation will not be optimal and the prediction accuracy will be poor. To combat the problem of modeling highly non-linear relationships, a *modular fuzzy* neural design can be used. The data is clustered into several overlapping operating regions and models are developed for each region. This design is shown in Figure 3-3. It is assumed that the relationship may be nonlinear between operating conditions but only slightly non-linear within each operating condition. These slight non-linearities can be modeled by the NLPLS system due to the embedded SISO neural networks. This modular design was developed by the Halden Reactor Project for use in the PEANO system [Fantoni 1998], but has also been applied to the NLPLS-based system [Fantoni 2002].

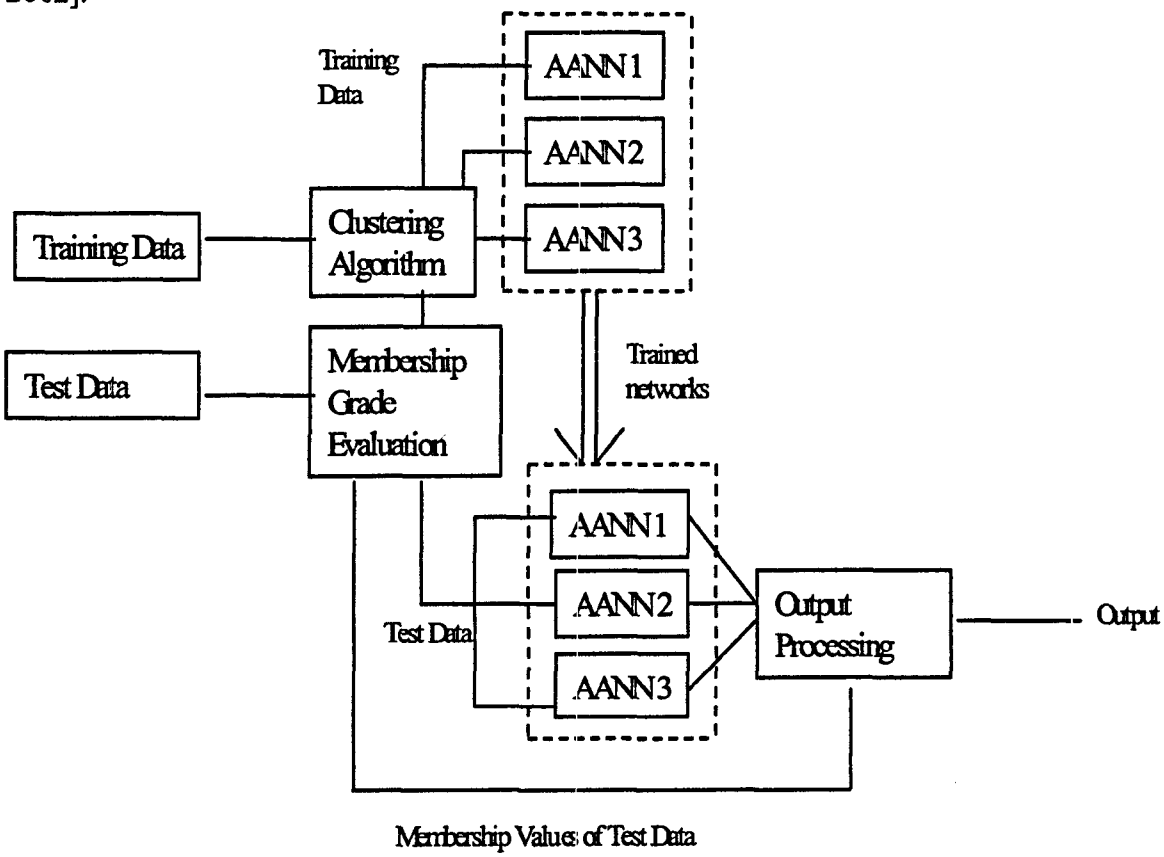

Figure 3-3 Modular Design

It should be stated that the relationships encountered in sensor calibration monitoring have been mostly linear, with the amount of non-linearity not sufficient to require the modular design for the NLPLS-based system.

3.4.5 Retraining

When input data is outside the operating region of the training data, the non-linear modeling systems' predictions are not reliable. This has been reported for kernel regression techniques such as MSET [Singer 1996], NLPLS [Rasmussen 2000b] and AANN [Fantoni 1998, Xu 1999]. Because of this, all three calibration monitoring systems have incorporated modules to monitor the plant operating region. The PEANO system has a reliability assessment module that outputs an estimation confidence [Fantoni 1998]. When several predictions are poor and/or the inputs are outside of the range of the training data, the reliability is assessed to be low. Poor predictions can be caused by different operating conditions, different process line-ups, plant faults, etc. The identification of operating condition changes will alert the operator to verify correct operations and, if the operation is correct, to retrain or retune the system to operate in the new region.

The MSET system incorporates retraining by adding new prototype vectors to the prototype matrix. This is a simple way to extend the model to encompass new operating conditions. Newer techniques, which incorporate expert system rules to determine if the system is faulted or in a new operating condition, have been devised by SmartSignal and are reported by Wegerich [2001].

The NLPLS-based system can be retrained using new training data. This task is similar in complexity to the original system development. Other techniques that have recently been explored include using the modular design and simply adding a new model covering the new operating condition. This technique eliminates the requirement of saving historical training data since the relationships are stored in the NLPLS model. It reduces the saving requirement to only saving the models developed for each operating condition.

We have stated that training AANNs is a difficult, time-consuming task. The retraining of an AANN would be less difficult if the old architecture and parameters were used as the starting point. Extremely fast re-tuning has been performed by simply performing a Singular Value Decomposition-based regression solution of the linear output layer using new training data [Xu 1999]. The modular design discussed above could also be used for AANN techniques.

3.4.6 Commercialization Level

An important consideration when choosing a sensor calibration technology is the level of commercialization of the product. There are currently four major service providers and systems being used for sensor calibration monitoring in nuclear power plants:

1. Expert Microsystems has developed a system termed SureSense(r) Diagnostic Monitoring Studio(r) software.
2. SmartSignal Inc. has developed a product termed eCM(tm), for equipment condition monitoring.
3. The Halden Reactor Project has developed a project termed Process Evaluation and

Analysis by Neural Operators (PEANO).

4. Analysis and Measurement Services Corporation (AMS) has developed a product termed Calibration Extension Program.

Expert Microsystem licensed an MSET based monitoring system from Argonne National Laboratory and teamed with EPRI to develop and test a sensor calibration monitoring system for nuclear power plants implementation. Recently (2004), intellectual property issues over MSET have caused Expert Microsystem to replace the MSET algorithm with another kernel technique termed Expert State Estimation Engine (ESEE) in their SureSense(r) Diagnostic Monitoring Studio(r) software. The EPRI implementation program tested the SureSense system on six nuclear power plants including Harris, Limerick, Salem, Sequoyah, TMI and VC Summer.

SmartSignal also licensed the MSET technology from Argonne National Laboratory. They have implemented their system on all three Palo Verde Nuclear Units for equipment condition monitoring. The technology has detected a RCS hot leg temperature sensor failure and a reactor coolant pump seal failures [Coppock 2003]. At the time of this writing, Arizona Public Service has not decided whether the cost benefit analysis warrants a license amendment for calibration extension.

Researchers at the Halden Reactor Project (HRP) in Norway have been leaders in the development of sensor calibration monitoring systems since their introduction of their system entitled Process Evaluation and Analysis by Neural Operators (PEANO) in 1995. This system was originally based on the AANN model but has since implemented the NLPLS algorithm [Fantoni 2002]. The system utilizes a client/server architecture and a modular modeling structure as presented in Figure 3.3. HRP researchers have applied the system to various plants around the world for equipment condition monitoring and sensor calibration monitoring. An excellent and complete history of PEANO's fifteen years of development and implementation is provided by Fantoni [2005].

AMS has implemented their Calibration Extension Program at the Sizewell B Nuclear Power Plant in Britian. Sensor calibration extension is especially important at Sizewell because they not only have redundant sensors but also redundant safety systems. Therefore, their number of redundant sensor is at least double that of a traditional U.S. plant. The AMS implementation uses averaging techniques and has proven successful [Lillis 2004]. It is expected that British Energy will begin extending calibration intervals of one sensor each fuel cycle. They feel that this phased approach is especially conservative.

3.4.7 Experience Base

Another consideration is the experience base of the employed technology. MSET has been investigated and used for over a decade. This technique has an extensive experience base. The neural network techniques have also been used for over a decade, although their application is more limited than the MSET techniques. The NLPLS technique is the newest of the three

techniques and was developed to combat the deficiencies the other techniques have in regards to collinear data. The NLPLS techniques have only been in operation for the past two years.

3.4.8 Applications

A brief early application example for each of these techniques is presented along with some examples of non-nuclear applications.

Multivariate State Estimation Technique (MSET)
Probably the first and best-known sensor calibration monitoring case study was a 1996 Department of Energy funded project applying several techniques to data from Florida Power Corporation's (FPC) Crystal River Nuclear Power Plant. In this study, which only spanned six months, Argonne National Laboratory's MSET system, the University of Tennessee's AANN-based system, and Sandia National Laboratory's Probabilistic Neural Network system competed in a head-to-head competition. Although formal testing and assessment was never performed due to funding issues, MSET was clearly the most advanced system at that time. Because of this, research applying the MSET system continued and the MSET system was reported to perform well on Florida Power Corporation nuclear power plant data [Gross 1997].

More recent applications include the use of SmartSignal's eCM™ for early fault detection on a wide variety of equipment systems, including jet engines, a steam turbine power generation facility, coal-fired boilers in power generation, natural gas compressors, paper making machines, and other industrial applications. SmartSignal eCM™ is currently monitoring Delta Airline's entire fleet of jet engines. More information on SmartSignal eCM™ applications can be found at the knowledge center at smartsignal.com where application notes are available for detection of turbine bearing issues, reactor coolant pump seal degradation, steam driven boiler feedwater pump, main generator mechanical coupling failure, aircraft critical engine problems, c-ring failure, and others.

Expert Microsystem's software has been used for assessing the performance of several NASA Small Business Innovation Research (SBIR) grants. These started with a 1994 SBIR grant from Glenn Research Center, in which a prototype system was used to validate 15 Space Shuttle Main Engine (SSME) sensors in real-time. It was embedded and successfully tested in Boeing's Advanced Fault Tolerant Flight Computer and Lockheed-Martin's Modular Rocket Engine Control Software. A Small Business Technology Transfer (STTR) grant was awarded by Marshall Space Flight Center in 1996 and another SBIR grant was awarded in 1998 by Dryden Flight Research Center for a real time signal validation system in which the software was used to produce an online Space Shuttle Main Engine accelerometer data validation system for NASA. Phase III follow-on Government contracts from NASA, Air Force, DOE, and State of California totaling $3 million. In 2000, commercial software released under the SureSense® trademark and more recently their technology is being used at Arnold Engineering Development Center.

Autoassociative Neural Network (AANN)
The AANN architecture had been employed by the University of Tennessee at Tennessee Valley Authority's Kingston Fossil Power Plant in the late 1990's [Xu 1999], but a more commercialized application was that of Haldon's PEANO system [Fantoni 1999]. This system was employed to monitor 29 sensors of the Halden Boiling Water Reactor. Data covering a year of operation were classified into five overlapping clusters and used to train the five AANNs that were integrated into the modular PEANO design (Figure 3-3). This was the first time that PEANO was used to monitor an application in real-time. The system was able to detect several measurement anomalies and artificial sensor drifts. This system has a superb user interface with a well-designed client server architecture.

Non-Liner Partial least Squares (NLPLS)
When originally developed by The University of Tennessee, the NLPLS based system was field tested at Tennessee Valley Authority's Kingston Fossil Power Plant. The system was used to monitor 84 sensors with an average estimation error of ~1% of the measured value, and out-of-calibration alarm levels at ~2.5% drift for the boiler system, and ~1% for the turbine system. During this time period several instrumentation anomalies were detected. More recent applications to nuclear and fossil power plants have been made by the Halden Reactor Project after embedding it into their PEANO system [Fantoni 2002, 2005].

3.4.9 Comparison Summary

Each of the modeling techniques described above have been proven to perform well for sensor calibration monitoring. Some of them perform slightly better in certain cases and some worse in others. In fact, there is a proven theorem, called the "No Free Lunch" theorem [Wolpert 1997] that states that no empirical model is best for all situations. Therefore, it is more important to use the chosen method correctly than to correctly choose a best model.

There are a few differences between the models that are noteworthy. The nonparametric techniques such as MSET and the ESEE kernel regression algorithm are easier to implement because they need no training and can be extended to new operating conditions simply by adding additional prototype vectors to the memory matrix. This is the primary advantage of the non-parametric techniques. Additionally, the NLPLS technique does have an advantage that it inherently produces more consistent results and is quicker to train than the AANN models [Kirschner 2003].

Each of the techniques has some user defined variables that affects the performance. For MSET, the kernel width, regularization parameter, and prototype vectors must be chosen; for an AANN, the number of hidden neurons in each layer must be specified; and for NLPLS, the number of latent variables and nonlinear element structure must be chosen. Even though each techniques' performances are slightly differently, the proper application of an uncertainty analysis should provide the user with a metric to rate its performance and guide its correct application to sensor calibration monitoring. The uncertainty analysis will be discussed in more detail in section 5.

3.5 Data Reconciliation

Data reconciliation (DR) techniques are techniques that make use of material and energy balances to reduce measurement errors. The use of process models embodies additional constraints which can be used to improve measurement accuracy. Measurement accuracy is commonly divided into random and systematic errors. Data reconciliation techniques are used to reduce random errors and companion techniques are used to detect and identify systematic errors caused by instrument drift or improper calibration. The methods produce reconciled estimates that are consistent with the known process relationships and inherently more accurate when no systematic errors exist.

The first application of data reconciliation was by Kuehn and Davidson in 1961 [Kuehn 1961] of IBM Corporation. They used a linear material balance in a problem in which all parameters were measured. Dynamic processes were solved using Kalman filtering techniques by Stanley and Mah in 1977 [Stanley and Mah 1977]. Non-linear models were investigated in 1980 by Knepper and Gorman [Knepper and Gorman 1980]. Dynamic, non-linear problems have only recently been solved by Liebman [1992]. The development of systematic error detection techniques followed each of these problem types by a few years using tests incorporating the generalized likelihood ratio, Bayesian, principal components, and other techniques. A fairly recent review is given by Crowe [1996].

The data reconciliation problem can generally be written as a constrained weighted least squares optimization problem in which the weights are related to the accuracy of specific measurements. When only flow variables are reconciled, the problem is a linear problem but when temperature or pressure sensors are included, the problem is non-linear. Another division of problem type is whether the conditions are steady state or dynamic. Nuclear power plants normally operate at full power which is considered a steady state application and greatly simplifies the solution.

$$Min \sum_i \left(\frac{y_i^* - y_i}{\sigma_i} \right)^2 \text{ with constraints} \tag{3.5.1}$$

where y_i^* is the reconciled data,

y_i is the measurement,

and θ_i is the measurement standard deviation.

Most data reconciliation techniques are based on the assumption that measurements contain only a random error component with a Gaussian distribution. In order for data reconciliation techniques to be effective, no systematic errors should exist [Narasimhan 2000]. To drive this point, Rollins [2002] states "when measurements are significantly biased, data reconciliation (the adjustment of process variables to improve their accuracy to satisfy material and energy balance constraints) may possibly give estimates (of process variables) that are more inaccurate than the measured variables". Systematic error detection is a technique commonly used with data

reconciliation to identify and eliminate systematic errors. Other immeasurable modeling assumptions, such as heat losses to the environment, can also cause data reconciliation techniques to produce incorrect results.

Data reconciliation techniques have been used in chemical, petrochemical and other process facilities. These techniques are primarily used to improve the accuracy of the measured parameters in conjunction with automated control, on-line optimization, or process economic improvement systems. We know of no uses of data reconciliation to reduce the need for manual calibrations or extend their intervals; however, systematic error detection techniques can be used to detect and identify instruments that are not operating correctly. In addition to being used to improve measurement accuracy, these data reconciliation techniques can also be used to estimate non-measured model parameters such as heat transfer coefficients. These measurements may be used to optimize plant maintenance. Additionally, data reconciliation techniques can be used to estimate controlled variables for improved process control.

The major characteristics of a data reconciliation problem include:

1. Steady state or dynamic,
2. Linear or non-linear,
3. All variables are measurable or not,
4. Includes non-measurable biases such as leaks or energy losses to the environment.

When data reconciliation techniques are used with measurements that have systematic errors, the error is smeared across all measurements. These smearing effects are referred to as spill-over in autoassociative empirical modeling in which specific methods are used to minimize or remove their negative effects. Simple systematic error detection methods identify the measurement with the largest adjustment and label it as the faulted measurement. This simple technique works if the constraints are linear as in flow balance equations. Once identified, the measurement is treated as unknown and data reconciliation techniques can be applied.

It has been stated in the most recent survey of techniques that "no test for systematic errors has a guarantee for consistently finding all of them" [Crowe 1996]. This statement is similar to the problem inherent in all techniques: that the random component can mask a fault, but that successive application of the techniques will show non-random patterns and make detection and isolation possible.

The following must be satisfied for reliable data reconciliation:

1. Steady state data and methods to check for non-steady state operations.
2. Estimation of variance-covariance structure for the measured variables.
3. Determination of the underlying probability distributions of the measurements (normality assumptions usually do not hold).
4. Redundancy: the measurement must have been observable if not measured. Recall

observable means that the measurement can be uniquely calculated from a set of the measured variables that are consistent with the constraints.

Additionally, uncertainty analysis techniques must be developed for these techniques to be useful for on-line calibration monitoring. It must be determined how biases (drifts) propagate for different plant physical models. The literature does not contain methods for this.

Several companies produce data reconciliation software products. These include DATACON™ which is a product by SIMSCI-ESSCOR (an Invensys company) that performs plant data reconciliation based on a sum of weighted least squares optimization technique, subject to a set of heat and material balance equality constraints. It is advertised as a preprocessor for optimization and as a systematic error detection tool. TECHNIP markets DATREC which is advertised to perform on-line detection of instrumentation errors, among other functions. It is advertised to have been applied in Belgium, Germany, Italy, and France but no technical notes are available.

Researchers at the Halden Reactor Project have developed a product called TEMPO which uses data reconciliation techniques. It was originally developed as an optimization tool but is also advertised to provide sensor monitoring for non-safety related instruments.

Electricité De France (EDF) has applied data reconciliation to its nuclear power plants and is investigating its performance for [Favennec 2003]:

- reducing costs of operation, such as optimising instrumentation maintenance (less calibrations, better planning of conditional calibration),
- increasing thermal efficiency, by better estimation of key performance indicators,
- increasing power output by more accurate estimation of operating set points (reducing uncertainty with more accurate measurements, thus increasing margins),
- increasing safety monitoring by better estimation of safety-related parameters on the primary system of nuclear plants (flow and temperature).

Specifically, EDF is investigating the use of data reconciliation for feedwater flow measurement correction. EDF plants have both a venturi meter and an orifice meter, whereas many U.S. plants have a venturi meter and an ultrasonic flow meter. Since the uncertainty of the feedwater flow meter represents 80% of the thermal power measurement uncertainty, its reduction could have direct and significant cost benefits. EDF's early studies show that data reconciliation results in a thermal power uncertainty of 0.3%. This is less than BIL100 (0.4%) which is their reference for periodic calibration of the continuous measurement of the reactor power. There are several assumptions inherent in these results such as no systematic errors, and EDF still questions whether their safety authorities will accept these methods.

The German guideline: VDI 2048 [2000], gives the full development of the theory behind data reconciliation as applied by EDF and others. Belsim Europe, a Belgium company, markets a data

reconciliation product called VALI which has been applied to process sensor calibration monitoring and is certified according to VDI 2048. The most recent presentation of their results was at the 2005 International Conference on Nuclear Engineering (ICONE13) [Streit 2005] in which they apply their techniques to optimize the accuracy of thermal power calculations at the Leibstadt nuclear power plant (KKL) in Switzerland. They claim improved accuracies of 0.5%.

As an example of data reconciliation, consider a simple flow splitter. This is a linear and observable example with single redundancy. Figure 3-4 shows a simple block diagram of a flow splitter. Assume all the sensors have similar noise variances and sensor two is in error.

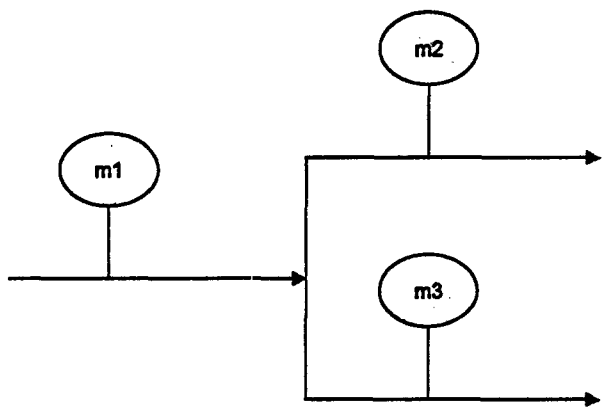

Figure 3-4 Diagram of a Flow Splitter

The constraint is that the sum of the split flows must equal the total flow.

Assume that the true parameter values are $m_2=m_3=1$ and $m_1=2$: $m_{true} = \begin{bmatrix} 2 \\ 1 \\ 1 \end{bmatrix}$ (3.5.2)

Also assume each sensor has similar standard deviations $\sigma_i=0.02$ resulting in a covariance matrix of

$$S_x = \begin{bmatrix} 0.02 & 0 & 0 \\ 0 & 0.02 & 0 \\ 0 & 0 & 0.02 \end{bmatrix}. \quad (3.5.3)$$

If one sensor is faulty due to drift, say m_2 reads 1.2, reconciliation of the data can be performed.

The measurement vector is $m = \begin{bmatrix} 2 \\ 1.2 \\ 1 \end{bmatrix}$ (3.5.4)

$$f(x) = m1 - m2 - m3 = 2 - 1.2 - 1 = -0.2 \qquad \text{and} \qquad \frac{df}{dx} = [1 - 1 - 1] \tag{3.5.5}$$

To reconcile this data the following equation must be solved:

$$f(\bar{x}) = f(x) + \frac{\partial f}{\partial x} v \tag{3.5.6}$$

in which f(x) is the vector of contradictions and v is the correction vector.

The minimization problem is

$$v \cdot S_x^{-1} \cdot v - 2\lambda \cdot f(\bar{x}) = \xi_0 \rightarrow \min \tag{3.5.7}$$

The measurement correction vector is

$$v = -\left(\frac{\partial f}{\partial x} S_x\right)^T \left(\frac{\partial f}{\partial x} S_x \left(\frac{\partial f}{\partial x}\right)^T\right)^{-1} * f(x) \tag{3.5.8}$$

Inserting the values we get: $\left(\frac{\partial f}{\partial x} S_x\right)^T \left(\frac{\partial f}{\partial x} S_x \left(\frac{\partial f}{\partial x}\right)^T\right)^{-1} = \begin{bmatrix} 0.33 \\ -0.33 \\ -0.33 \end{bmatrix}$ (3.5.9)

And the correction vector is:

$$v = -\begin{bmatrix} 0.33 \\ -0.33 \\ -0.33 \end{bmatrix} (-0.2) = \begin{bmatrix} 0.0667 \\ -0.0667 \\ -0.0667 \end{bmatrix} \tag{3.5.10}$$

Applying these corrections result in reconciled measurements of:

$$\overline{m} = m + v = \begin{bmatrix} 2 \\ 1.2 \\ 1 \end{bmatrix} + \begin{bmatrix} 0.0667 \\ -0.0667 \\ -0.0667 \end{bmatrix} = \begin{bmatrix} 2.0667 \\ 1.1333 \\ 0.9333 \end{bmatrix} \tag{3.5.11}$$

The measurement errors are now: $errors = m_{true} - \overline{m} = \begin{bmatrix} 2 \\ 1 \\ 1 \end{bmatrix} - \begin{bmatrix} 2.0667 \\ 1.1333 \\ 0.9333 \end{bmatrix} = \begin{bmatrix} -0.0667 \\ -0.1333 \\ 0.0667 \end{bmatrix}$ (3.5.12)

Summing the absolute value of the errors gives a total error (1-norm) of 0.2667. The original error was 0.2. Reconciliation of the data has increased the 1-norm of the error. Additionally, even though $m_1=m_2+m_3$, it is doubtful that a systematic error detection technique can identify the drifted sensor since all the corrections are equal. In the case of unequal variances, the corrections will not be equal and systematic error detection may be more difficult. In this case there is only single redundancy, additional redundancy is necessary to identify the error.

The following can be used to calculate the variance –covariance matrix corrections:

$$S_x = -\left(\frac{\partial f}{\partial x} S_x\right)^T \left(\frac{\partial f}{\partial x} S_x \left(\frac{\partial f}{\partial x}\right)^T\right)^{-1} \left(\frac{\partial f}{\partial x} S_x\right) = \begin{bmatrix} 0.0067 & -0.0067 & -0.0067 \\ -0.0067 & 0.0067 & 0.0067 \\ -0.0067 & 0.0067 & 0.0067 \end{bmatrix} \quad (3.5.13)$$

resulting in the new variance-covariance matrix, which is shown below.

$$S_x = \begin{bmatrix} 0.02 & 0 & 0 \\ 0 & 0.02 & 0 \\ 0 & 0 & 0.02 \end{bmatrix} - \begin{bmatrix} 0.0067 & -0.0067 & -0.0067 \\ -0.0067 & 0.0067 & 0.0067 \\ -0.0067 & 0.0067 & 0.0067 \end{bmatrix} = \begin{bmatrix} 0.0133 & 0.0067 & 0.0067 \\ 0.0067 & 0.0133 & -0.0067 \\ 0.0067 & -0.0067 & 0.0133 \end{bmatrix}$$

The variances are reduced from 0.02 to 0.0133. The 95% confidence intervals are calculated as $m \pm t\sigma$ with $t = 1.96$.

$$m_{new} = \begin{bmatrix} 2.0667 \pm 0.1155 \\ 1.1333 \pm 0.1155 \\ 0.9333 \pm 0.1155 \end{bmatrix} \quad (3.5.14)$$

Note that the confidence interval of sensor two does not include the actual flow rate of 1. However, we would be blind to this and would trust the incorrect values. This shows that data reconciliation should only be used for bias free values in the case of single redundancy. If there were other sensors with relationships to these sensors, those relationships could be added as constraints and the error may be identifiable. The data reconciliation methods do provide reduced variance predictions, but will not produce accurate results when the measurements are

biased due to sensor drift. Other companion detection methods must be used to identify and correct for these systematic errors.

4. ON-LINE MONITORING IMPLEMENTATION

This chapter presents a brief on-line monitoring implementation overview. A more robust discussion of OLM's implementation is found in EPRI's *On-Line Monitoring of Instrument Channel Performance Volume 1: Guidelines for Model Development and Implementation* [EPRI 2004a].

4.1 Model Setup

It is important to understand the components of an OLM system. The most common OLM system consists of an off-line computer on which the monitoring system resides; several communications hardware and software tools to obtain data from the plant process computer; a plant data historian, or other data source; and finally, the commercialized OLM software, which performs the OLM analysis and presents the sensor calibration status results.

The first step in the implementation of on-line monitoring is the installation, testing, and verification of the data acquisition system. The data acquisition system simply acquires and stores the plants historical data files in an isolated setting. Figure 4-1 shows the relative position of the typical data acquisition system in regards to the instrument channel. It is important to note the isolation of the data acquisition system. This setup ensures that the isolation and independence between the on-line monitoring devices and class 1-E instruments meet all NRC Regulations. The data acquisition system usually receives the instrument's data in the form of a voltage output, which the on-line monitoring system scales back into the expected process units. The significant considerations of data acquisition are data file naming, data storage format, and data handling management.

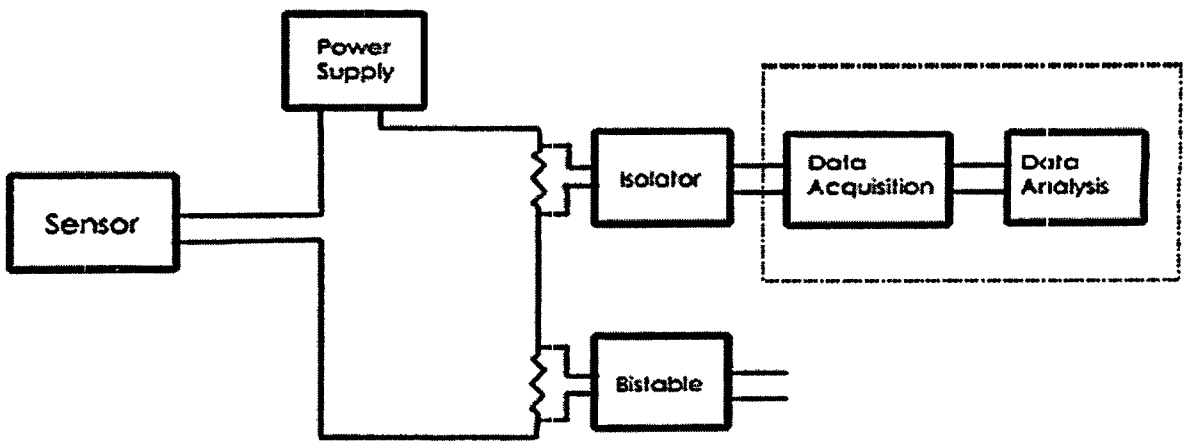

Figure 4-1 Instrument Channel with On-Line Monitoring

The transfer of data between the data acquisition system and the OLM software can occur in either batch mode or in near real-time. The term on-line means that the monitoring will be

performed while the plant is on-line, or operating, and does not necessarily mean it is performed in real-time. The term *batch mode* means that data files are stored in some location and are accessed by the on-line monitoring system at discrete time intervals. Figure 4-2 depicts the set up of a generic OLM system.

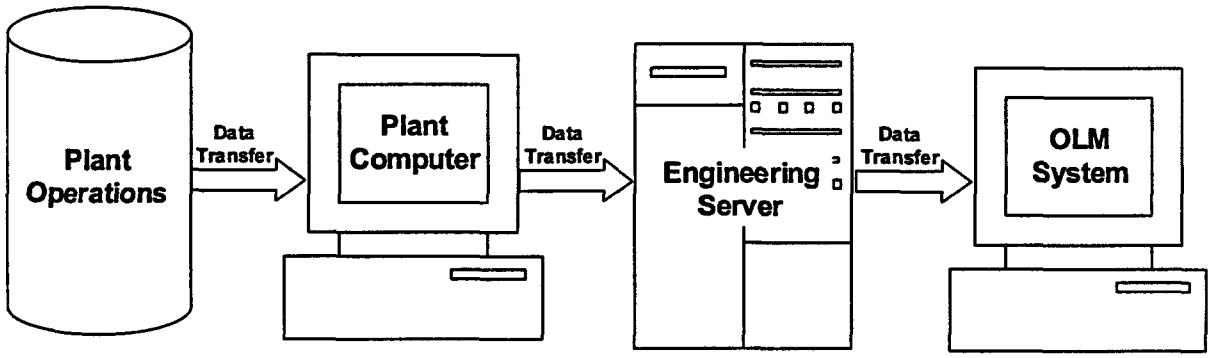

Figure 4-2 On-Line Monitoring System Setup

The NRC SER on this topic requires that the calibration monitoring be performed quarterly; however, equipment condition monitoring may be more beneficial when performed in a real-time mode [NRC 2000]. Currently, some plants run their batch monitoring algorithms at night when the network and computer processing loads are at a minimum. This method produces results that are available for plant personnel to evaluate each morning.

Regardless of the underlying algorithm, all OLM systems construct plant models that calculate the parameter estimates. In this sense, the term model describes the empirical relationships between signals that have been grouped together to perform signal validation. For example, combinations of various signals measuring reactor power, RCS hot leg temperature, steam generator level, steam pressure, steam flow, feedwater flow, and turbine impulse pressure could be grouped together to form a model. The term model also may encompass the optimization parameters and settings defined by the OLM software. The EPRI modeling guidelines document [2004b] provides generic and plant specific instructions on developing plant models.

4.2 Model Performance Measures

For a modeling technique to be considered suitable for OLM, the model should:

- produce accurate results,
- produce repeatable and robust results,
- and have a method to estimate the uncertainty of the predictions.

Each of these will now be briefly discussed.

4.2.1 Accurate Results

Accuracy is a measure of how well a model estimates the true value of the plant parameter. The accuracy of a model is affected by the model's inherent ability to describe the process at hand, the

model inputs, the model parameters, and the amount and quality of the data used to build the model. Several of these factors are discussed in greater detail in the following section.

4.2.2 Repeatable and Robust Results

When empirical modeling techniques are applied to data sets that consist of collinear (highly correlated) data sets, ill-conditioning can result in highly accurate performance on the training data, but highly variable, inaccurate results on unseen data. Robustness is a measure of a model's ability to produce correct results when the inputs are corrupted by noise or when an input sensor is faulted. Regularization techniques can be applied to make the predictions repeatable, robust, and with lower variability [Hines 1999, 2000, 2005a, Gribok 2000]. A summary of the methods is given by Gribok [2004], and regularization methods have been applied to many of the systems currently in use.

4.2.3 Uncertainty

The most basic requirements outlined in the NRC safety evaluation [2000] are that of an analysis of the uncertainty in the empirical estimates. Argonne National Laboratory has performed Monte Carlo based simulations to estimate the uncertainty of MSET based technique estimations [Zavaljevski 2000, 2003]. These techniques produce average results for a particular model trained with a particular data set. Researchers at The University of Tennessee have developed analytical techniques to estimate prediction intervals for all of the major techniques (MSET, AANN, PEANO, and NLPLS). The analytical results were verified using Monte Carlo based simulations and provide the desired 95% coverage [Rasmussen 2003a, 2003b, 2004, Gribok 2004]. Each of the techniques performs well; some better than the others, on various data sets. Chapter 5 contains a detailed discussion of uncertainty.

When a modeling technique is chosen that meets all of the above requirements, it is then necessary to develop and implement the model using historical plant data.

4.3 Model Development and Implementation

The following is a list of the basic steps for model development and implementation:

Step #1. Acquire "Good" Data

The first step in model development is to acquire representative data. The acquired data must be carefully reviewed to assure its quality. The data should be processed to remove all outliers and data anomalies. These include interpolation errors, random data errors, missing data, loss of significant figures, stuck data, and others. Data should always be visually observed and errors corrected or deleted before use.

Interpolation errors occur when the historical data is retrieved from data archival programs that

tolerance are stored along with their time stamp. This method requires much less storage but results in a loss of data fidelity. When data is extracted from the historian, data values between logged data points are calculated through a simple linear interpolation. Data collected for model training should be actual data and tolerances should be set as small as possible or not used at all.

Random data errors, missing data, loss of significant figures, and stuck data often can be visually identified or can be detected by a data clean up utility. These utilities remove bad data or replace it with the most probably data value using some algorithm. It is most common to delete all bad data observations from the training data set. Most OLM software systems include automated tools for data cleanup; these tools easily identify outlying data but are typically insensitive to data errors that occur within the expected region of operation.

The addition of bad data points in a training set can invalidate a model. The figure below shows the prediction results with (Figure 4-3) and without (Figure 4-4) two bad data points [Hines 2005b]. The actual data is in red while the predicted data is in blue.

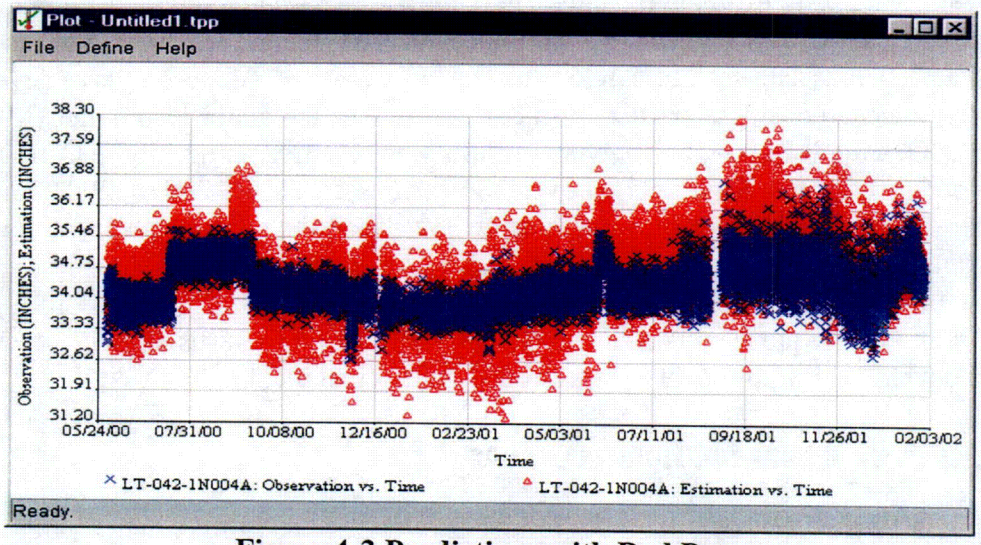

Figure 4-3 Predictions with Bad Data

C02

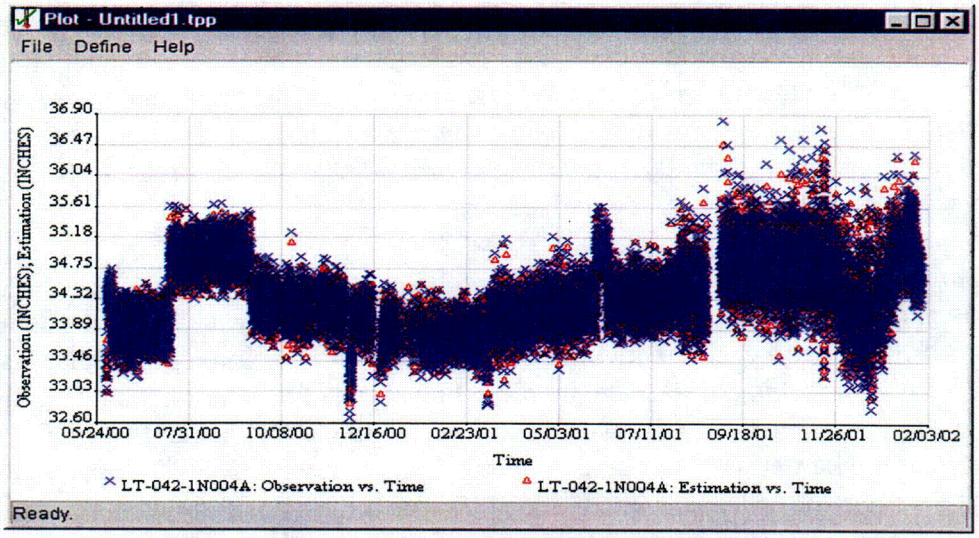

Figure 4-4 Predictions with Bad Data Removed

The data should also cover the entire future operating range and be free of atypical operating states. These requirements become especially critical for empirical modeling techniques. Since these techniques learn the functional relation from the training data, they are incapable of making a prediction outside the operating region of the training data. If uncharacteristic operating states, such as instrument drift or equipment failure, are included in the training set, the modeling procedures will learn these conditions as normal behavior.

Step #2. Group Sensors into Optimal Models

The next step is to select the sensors to include in each model. For redundant techniques, this selection process is simple, as only the group of redundant sensors is included. For the non-redundant techniques, this task becomes more difficult. The entire set of safety critical sensors to be monitored must be divided into smaller highly correlated groups. Experience has shown that optimal model groupings result in models commonly containing less than 30 signals [EPRI 2004a]. It has also been proven that adding irrelevant signals to a model increases the prediction variance while not including a relevant signal biases the estimate [Rasmussen 2003b]. Therefore, it is important to optimize the variable grouping to reduce predictive uncertainty. Fortunately, automated methods have been developed that can simplify signal selection for non-parametric models. Hines [2004] describes the automated methods of variable grouping for MSET.

Step #3. Select Training Data

For many of the empirical models, the data must be divided into training, verification, and validation data sets. The training data set is used by the model to learn the relationship between the sensors while the verification sets are used to optimize the model parameters in order to reduce predictive uncertainty. Finally, the validation data is used to quantify the model performance measures.

C03

Kernel regression based models such as MSET or ESEE require prototype observations be stored in a memory matrix to be used to make future predictions. The proper selection of these prototype vectors has a direct and important influence on the model performance. Retaining too few data vectors in the memory matrix starves the model of information and causes poor performance. Retaining too many vectors in the memory matrix results in slow recall performance, and more importantly, may cause poor predictive performance if the inversion of the memory matrix is not properly regularized.

Step #4. Construct and Optimize Predictive Models

The models must be constructed to minimize predictive uncertainty. Usually this means that the complexity (or flexibility) of the model must be matched to the complexity of the relationships to be modeled. If the model is not flexible, it will not be able to fit the relationships in the data, and if the model is overly flexible it will overfit the data and model the noise. In kernel regression, this is related to the kernel width and the regularization parameter (MSET); in AANNs this is related to the number of neurons in each hidden layer and the size of the weights, while in NLPLS this is related to the number of latent variables kept in the model and the complexity of the nonlinear processing units. In each case, the optimization technique can be considered as a method of regularization.

Step #5. Evaluate the model

For most empirical models, the model is trained using the training data and optimized using the verification data. The model then should be evaluated using the validation data based on several criteria. The model's accuracy, robustness, spillover, and predictive uncertainty should all be taken into account. Accuracy is a measure of how well the model outputs match the sensor data and is usually presented as a mean squared error. An optimal accuracy would be equal to the amount of noise in the sensor reading. The robustness of a model is a measure of how well a sensor prediction tracks the actual plant parameter when that sensor is drifting. A robust model will form the sensor prediction on information contained in several related sensor values and not primarily on the sensor of interest. Spillover is a measure of how a drifting sensor input affects the prediction of other sensor values. A model with good spillover resistance will not be affected by a drifting sensor.

Step #6. Uncertainty Analysis

After the model is developed and optimized, its uncertainty needs to be quantified. Several methods for quantifying empirical model uncertainties are discussed in the following section.

Step #7. Transition to On-line Mode

Once a model has been developed, optimized, and its uncertainty quantified, the OLM system can be implemented in an on-line or batch monitoring mode. It is important to note that it may be necessary to retrain the models with more up-to-date training data when changes in operating or environmental states are encountered. If these unforeseen instances occur, new data can be collected and the models can be retrained.

5. UNCERTAINTY ANALYSIS

It is crucial to have a measure of the prediction uncertainty of a model estimate when the model is being used to monitor safety-critical or high-value operations. This fact is required and strongly stated in the NRC's Safety Evaluation (SE) of on-line monitoring. Requirements 1, 5, 6, and 7 of the SE pertain to the quantification of uncertainty associated with the plant parameter estimates. Overall, the quantification of this uncertainty is one of the most critical issues for the safe use and acceptance of on-line monitoring.

Parameter estimate uncertainty has many contributing sources. For empirical modeling techniques, inaccuracies in the training data and inherent limitations of the model contribute to the total uncertainty. For parity spaced-based methods, such as ICMP, the user-defined inputs, the number of redundant channels, and the noise level and amount of drift present in each channel contribute to the uncertainty of the parameter estimate. These uncertainty sources are discussed in more detail later in this section.

To better understand these uncertainty components consider a set of input values x, and a corresponding set of desired responses or targets $t(\mathbf{x})$. The relationship is: $t(x) = f(x) + \varepsilon(x)$, where $f(x)$ represents the true underlying function which is contaminated by $\varepsilon(x)$ which represents a random noise component due to measurement error. Although one desires the model to represent the true function $f(x)$, only contaminated measurements t(x) are available for model development. For any model prediction, $\hat{f}(x)$ represents the total prediction uncertainty, in terms of standard squared error between the target and actual model output. At input $\mathbf{x} = \mathbf{x}_0$, this error is given by:

$$
\begin{aligned}
EPE(x_0) &= E\left[\left(t(x) - \hat{f}(x_0)\right)^2 \middle| X = x_0\right] \\
&= \sigma^2 + \left[Bias^2\left(\hat{f}(x_0)\right) + Var\left(\hat{f}(x_0)\right)\right] \qquad (5.1) \\
&= \sigma^2 + \left[E\left[\hat{f}(x_0)\right] - f(x_0)\right]^2 + \left[\hat{f}(x_0) - E\left[\hat{f}(x_0)\right]\right]^2
\end{aligned}
$$

The first term (σ^2) is commonly termed the irreducible error because it cannot be controlled through the modeling process. It is due to the random disturbances in the measurement process. The second and third components are commonly termed the squared bias and the variance respectively. These terms are controllable and make up the mean squared error of our estimate. The squared bias indicates the intrinsic capability of the model to represent the phenomenon under study. The squared bias can be viewed as a measure of the distance, in terms of squared error, between the true value and mean estimated response, using the mean to average out the randomness of the data. The variance corresponds to the variability in the predictions around the

expected value and does not depend on the desired output. These two uncertainty components are assumed to be independent and combine to give the total prediction uncertainty. Both components must be taken into account when making uncertainty estimations.

Prediction uncertainty is generally expressed in terms of a prediction interval. Using the definition of standard squared error, a prediction interval can be constructed by:

$$\hat{f}(x_0) \pm t_{a/2}\sqrt{Bias^2 + Variance}, \tag{5.2}$$

where $t_{a/2}$ is the critical value for the t-distribution.

This prediction interval gives the upper and lower bounds between which there is a (100 - α) x 100% probability that the true output of the model prediction (at input x_0) lies. Unlike the commonly used confidence interval, the prediction interval is concerned with the confidence in the prediction of the targets, or the distribution of the quantity $t(x) - \hat{f}(x)$. The confidence interval only accounts for the variance component of the uncertainty, or the distribution of the quantity $f(x) - \hat{f}(x)$. It can be seen that confidence intervals are enclosed within the prediction intervals: $t(x) - \hat{f}(x) = \left(f(x) - \hat{f}(x)\right) + \varepsilon(x)$ [Carney 1999]. Thus, the prediction interval is much more practical than the confidence interval because it provides the accuracy with which the desired response can be predicted, and not just the accuracy of the model itself [Rasmussen 2003a].

For some models, there are analytical methods for estimating prediction intervals. However, some of these analytical methods are extremely intensive computationally; furthermore, for some modeling techniques such as ICA and ICMP, there are no known analytical methods for calculating uncertainty statistics. In these cases, it is often necessary to use Monte Carlo techniques to determine the prediction intervals [Efron 1993]. Analytical methods for MSET, AANN, and NLPLS prediction intervals have been derived and are presented in the following sections. A discussion of the Monte Carlo techniques for uncertainty estimation is also provided.

5.1 Analytical Methods for Uncertainty Estimation

The analytical methods for prediction interval estimation of MSET, AANN, and NLPLS are presented in this section. As previously mentioned, the inaccuracies in the training data and inherent limitations of the model contribute to the total uncertainty of these techniques. More specifically, the selected predictor variables, the amount and selection of data used to develop the model, the model structure including complexity, and the noise in the predictors and response all influence the uncertainty.

The selection of a training set is prone to sampling variation because there is variability in the random sampling from the entire population of data. Since each possible training set will produce a different model, there is a distribution of predictions for a given observation. Models can also be incorrectly specified, which introduces a bias due to the improper model, e.g. fitting non-linear data to a linear model will result in a biased model. Model misspecification may occur for the ANN models and the NNPLS models, though given the proper number of free parameters both techniques are proven to perform adequately, i.e. with minimal bias. While misspecification cannot technically occur for a local polynomial model, due to the absence of the specification of a model, there may be a bias due to the selection of the bandwidth parameter, as this controls the complexity of the local regression model.

Incorrect model complexity increases model uncertainty. A model without the required flexibility will bias the solution while an overly complex model tends to fit the noise in the training data and has an increased variance. For an ANN, the complexity is determined by the number of hidden neurons; for kernel regression, the complexity is controlled by the polynomial order and the bandwidth; and for a NLPLS model, the complexity is determined by the number of latent variables included in the model.

The selected set of predictor variables influences the model uncertainty. If the predictor variable set does not contain the necessary information to accurately model the desired response, a bias results. If the predictor variable set contains variables that are unrelated to the desired response an increased solution variance results. Noise in either the input or output data is a potential source of uncertainty.

Each of the following analytical approaches to prediction interval estimation considers only the noise in the dependent, or response, variable. Alternate theories based on the error-invariables model are available for including the noise in the predictor variables in developing prediction intervals. These methods require knowledge of the noise level present, which is usually unknown. However, de-noising methods can quantify the noise level.

5.1.1 Prediction Interval Estimation for MSET

This section presents the results derived by Gribok [2004]. Assume that the model of the signal under consideration is as follows:

$$Y_i = m(X_i) + \varepsilon_I \tag{5.1.1}$$

where (X_i, Y_i) is the observed data; X_i represents predictor variables; Y_i is a response. ε_i is a randomly distributed variable for which

$$E(\varepsilon_I) = 0 \text{ and } Var(\varepsilon_I) = \sigma^2. \tag{5.1.2}$$

This model assumes that there is no dependency between the variance function and X_i.

The MSET prediction for this model can be rewritten in matrix terms in the framework of kernel regression with the following:

$$\hat{m}_{MSET}(x_{new}) = \left\lfloor 1^T \bullet (x_{tr}^T \otimes x_{tr})^{-1} \bullet (x_{tr}^T \otimes x_{new}) \bullet 1 \right\rfloor^{-1} \bullet 1^T \bullet (x_{tr}^T \otimes x_{new})^{-1} \bullet (x_{tr}^T \otimes x_{tr})^{-1} Y_{tr} \tag{5.1.3}$$

where 1 is a column of ones, x_{tr} is an array of training data, x_{new} is a query point, Y_{tr} is the training response data, and • denotes matrix multiplication. Now that the MSET is in terms of kernel regression, the standard uncertainty calculations for local linear estimators can be applied. Gribok [2004] presents this derivation in its entirety.

Using several approximations, the bias of any local linear estimator is estimated by the following:

$$E\left(\hat{m}(x,1,h)\right) - m(x) = \frac{1}{2} h^2 m''(x) \mu_2(K) + o\left(h^2\right) + O\left(n^{-1}\right) \tag{5.1.4}$$

where $\mu_2(K) = \int x^2 K(x)\,dx$, K is the chosen probability distribution function, and h is the bandwidth.

The bias depends on *x* through *m''(x)* which is due to the error of linear approximation. If the true regression function *m* is close to linear relationship at *x*, the bias is quite small. A larger bandwidth smooths the estimate, which introduces a bias.
The variance of the local linear estimator is:

$$Var\left(\hat{m}(x,1,h)\right) = e^T{}_1 \left(X^T W X\right)^{-1} X^T W V W X^T \left(X^T W X\right)^{-1} e_1 \tag{5.1.5}$$

$$where\ V = diag\left\{v(x_1), v(x_2), \ldots v(x_n)\right\},$$

in the case of homoscedastic model we have $V = diag\left\{\sigma^2, \ldots \sigma^2\right\}$

After performing some approximations, the following expression for the variance is obtained.

$$Var\left(\hat{m}(x,1,h)\right) = \frac{1}{nh} R(K) \sigma^2 + o\left(\frac{1}{nh}\right) \tag{5.1.6}$$

$$where\ R(K) = \int K(x)^2\,dx \tag{5.1.7}$$

The dependency on the reciprocal of the kernel bandwidth h reflects the fact that the estimation becomes more variant when a narrow kernel bandwidth is applied. Since the given formulae require the specification of the kernel bandwidth, the proper choice of h is extremely important. The selection of the kernel bandwidth h can be optimized by using a cross-validation routine, or by implementing a complexity based cost function, which considers both the sum of squared error and the complexity of the model [Hines 2005a].

5.1.2 Prediction Interval Estimation for Artificial Neural Networks

This section presents the method applied to sensor calibration monitoring by Rasmussen [2003a]. Consider a non-linear model of y using predictor variables **x**, where the response is a single parameter or vector:

$$y_i = f(x_i, \theta) + \varepsilon_i$$

$$\begin{aligned} &\textit{where: } x_i = \left[X_{i,1} X_{i,2} \cdots X_{i,p}\right], i = 1, \ldots, n \\ &\quad \textit{p is the number of predictor variables and n is the number of observations,} \\ &\quad \theta \textit{ is the moel parameters} \\ &\quad \varepsilon = \left[\varepsilon_1 \varepsilon_2 \cdots \varepsilon_n\right] \textit{ is noise.} \\ &\quad \textit{The assumptions of normality and independence and } \varepsilon \sim N\left(0, I\sigma_\varepsilon^2\right). \end{aligned} \tag{5.1.2.1}$$

The sum of squared error is then:

$$S(\theta) = \sum_{i=1}^{n} \left\{y_i - f(x_i, \theta)\right\}^2 \tag{5.1.2.2}$$

Values of θ which minimize S(θ) are denoted by $\hat{\theta}$. A derivation using the Taylor series expansion (to the first order) of $f(x_i, \theta)$ *about* $\hat{\theta}$ is given by [Chryssolouris 1996] and results in the estimation with its associated prediction interval:

$$\hat{y}_0 \pm t_{a/2}^{n-p} \sqrt{f_0^T \sum f_0 + s^2} \tag{5.1.2.3}$$

Using the variance estimate: $\sum = s^2 \left[F^T F\right]^{-1}$ [Chryssolouris 1996], this becomes:

$$\hat{y}_0 \pm t_{a/2}^{n-p} \cdot s \sqrt{1 + f_0^T \left(F^T F\right)^{-1} f_0} \tag{5.1.2.4}$$

$$f_0^T = \left(\frac{\partial f\left(x_0;\theta^*\right)}{\partial \theta_1^*}, \frac{\partial f\left(x_0;\theta^*\right)}{\partial \theta_2^*}, \ldots, \frac{\partial f\left(x_0;\theta H^*\right)}{\partial \theta_p^*} \right)$$

F is the $n \times p$ Jacobian matrix of first order partial derivatives with respect to the parameters determined from the least squares minimization of S(θ), i.e.

$$F_{i,j} = \frac{\partial f\left(x_i;\hat{\theta}\right)}{\partial \theta_j}.$$

s^2 is an estimate of the noise variance σ_ε^2 given by:

$$s^2 = \frac{1}{n=p} \sum_{i=1}^{n} \left[y_i - f\left(x_i;\hat{\theta}\right) \right]^2$$ [Chryssolouris 1996].

This approach can be applied directly to ANNs by calculating the full Jacobian matrix based on the training data and the ANN weight and bias parameters. An estimate of the variance of the error term due to model limitations is then obtained based on the training data, and the following equation:

$$s^2 = \frac{\sum_{i=1}^{n} \left(y_i - \hat{y}_i\right)^2}{n} \left[Tibshirani\ 1996 \right] \tag{5.1.2.5}$$

For each new observation, x_0, the following quantities can be computed: the ANN estimate $\hat{y}_0 = f\left(x_0;\hat{\theta}\right)$, the vector of partial derivatives, f_0, and the 100(-α) × 100% prediction interval from:

$$\hat{y}_0 \pm t_{\alpha/2}^{n-p} \cdot s \sqrt{1 + f_0^T \left(F^T F\right)^{-1} f_0} \tag{5.1.2.6}$$

5.1.3 Prediction Interval Estimation for NNPLS

The prediction interval estimate for NNPLS is analogous to that described in Equation 5.1.2.6 for the ANN architecture:

$$\hat{y}_0 \pm t_{a/2}^{n-p} \cdot s\sqrt{1 + f_0^T \left(F^T F\right)^{-1} f_0} \qquad (5.1.2.6)$$

Note that **F** is the Jacobian matrix computed using the training data, and f_0 is the Jacobian computed for a new observation $\mathbf{x}_0$ used for computing prediction intervals of the corresponding prediction $\hat{y}_0$. Details can be found in Rasmussen [2003a].

5.2 Monte Carlo Methods for Uncertainty Estimation

Monte Carlo analysis gets its name from the city of Monte Carlo in Monaco. This city is especially known for its casinos. The games in the casinos, such as roulette, slot machines, and dice, all exhibit random behavior. The random behavior in these games is similar to how Monte Carlo methods select the variable values to simulate a model. In general, Monte Carlo methods can be described as simulation methods that use sequences of random numbers to perform the statistical simulations.

In Monte Carlo analysis, the possible values for each uncertain variable (one that has a range of possible values) are defined with a probability distribution. The type of distribution is based on the conditions surrounding that variable. The process in question is then evaluated by repeatedly sampling values from the probability distributions for the uncertain variables, applying these values to a developed model of the process, and evaluating the simulated response. By performing a Monte Carlo simulation many times, statistical predictions (in most cases, uncertainty predictions) regarding the process can be developed. The basic Monte Carlo process is diagramed in Figure 5-1.

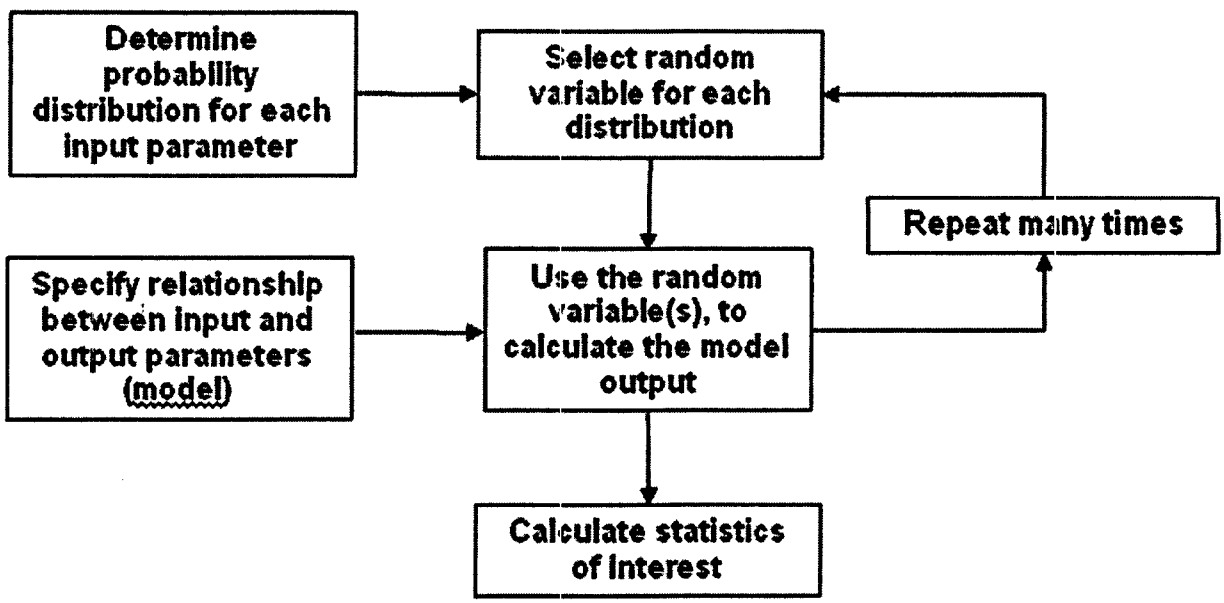

Figure 5-1 Flowchart of Monte Carlo Method

The Monte Carlo method is obviously influenced by the number of repetitions that are performed. If the sampling is repeated enough times, the Monte Carlo calculated statistics give an accurate representation of the true process statistics. However, if too few trials are used, the Monte Carlo computed statistics are meaningless. The Monte Carlo method also easily faces inefficiency problems when the simulated values are not sufficiently attuned to the distribution of interest.

5.2.1 Monte Carlo and ICMP

The uncertainty of the ICMP algorithm's estimation was originally evaluated by EPRI [1995] and later by Rasmussen [2002a]. This value is often calculated with the following:

$$95\% \Big/ 95\% = \pm\sqrt{\sum_{i=1}^{n} D_i^2 + (2\sigma_x)^2} \qquad (5.2.1.1)$$

where n is the number of redundant sensors,
D_i is the deviation from the parameter estimate for the ith sensor,
σ_x is the standard deviation of the parameter estimate.

Monte Carlo analysis is used to determine, σ_i, the standard deviation of the parameter estimate. This analysis is carried out through the following steps [Rasmussen, 2002]:

1. Generate random numbers from a normal distribution with a mean of zero and a specified variance.
2. Specify assumed sensor uncertainty (noise, etc.), consistency check factor, and acceptance criterion.
3. The true process value is assumed to be known. Each random number is multiplied by the sensor uncertainty and added to the assumed process value.
4. The consistency checks are performed, and a parameter estimate is calculated.
5. The acceptance criterion checks are performed, and potentially failed sensors are identified.

The standard deviation of the parameter estimate is then calculated by the following:

$$\sigma_x = \sqrt{\sum_{k=i}^{p} \frac{\left(\hat{x}_k - \bar{\hat{x}}\right)^2}{p-1}}, \qquad (5.2.1.2)$$

where $\hat{x}_k$ is the parameter estimate at the kth data sample, p is the number of redundant sensors, and $\overline{\hat{x}}$ is the mean parameter estimate.

There are numerous assumptions that go into this analysis. One of the most prominent is the assumption of a normal distribution. A normal distribution is chosen to represent the process based on previous studies that, using as-found and as-left calibration data, determined that instrumentation performance is typically bounded by the assumption of normality. The EPRI report, *Monte Carlo Simulation and Uncertainty Analysis of the Instrument Calibration and Monitoring Program*, discusses this assumption and the past studies in greater detail [EPRI 1995]. However, when actually carrying out a new analysis, it may be prudent to verify the probability distribution for the data using noise statistics, rather than just relying on this assumption.

Additionally, this form of the Monte Carlo analysis assumes that the true process value is constant. Thus, all measurements can be directly compared. Even when the plant is operating steady-state conditions, the process value is fluctuating by small amounts over time. Drift is also unaccounted for with this method. Although any instrument drift that may occur is partially encompassed by the term D_i in Equation 5.2.1.1, drift also affects the standard deviation of the parameter estimate. Furthermore, the true process value is not known in the plant; it is estimated by ICMP. To make the equation dynamic, this entire process would have to be repeated for each small fluctuation in the monitored process, which would be entirely too computationally intensive. However, since ICMP is designed for single-point monitoring, and the uncertainty from instrument drift is still partially described by the residual terms in Equation 5.1.2.1, these shortcomings may not invalidate this uncertainty technique. Clearly, more investigation is warranted into the assumptions surrounding the application of Monte Carlo methods to the ICMP algorithm.

Prior Monte Carlo studies have formed the framework for understanding the uncertainty of the ICMP algorithm. These studies have shown that the uncertainty in the ICMP process is influenced by several factors including: the number of redundant channels, the magnitude of the user-defined acceptance criterion and consistency check factor, and the nature of drift of each channel. As expected, the uncertainty generally decreases as the number of redundant channels increases. The studies also showed that performing multiple uncertainty analyses over different user-defined inputs can help determine the proper selection of the user-defined variables.

5.2.2 Bootstrapping

The bootstrap method is a variation on the traditional Monte Carlo method. The bootstrap method can be used to estimate the standard error of all empirical modeling techniques. Thus, in theory, the bootstrap method could be used to perform the uncertainty analysis for the OLM modeling techniques, namely MSET, NLPLS, and AANN. However, only nonparametric techniques such as MSET and other kernel regression techniques can be trained fast enough so

that their uncertainties can be evaluated using Monte Carlo techniques. Techniques such as autoassociative neural networks and even non-linear partial least squares require training times on the order of minutes to hours. Since the Monte Carlo technique requires the training and development of hundreds or thousands of models, these techniques cannot be properly evaluated except when small, simple problems are being used.

Like all Monte Carlo methods, bootstrapping is a re-sampling procedure that uses computer simulation to make statistical inferences [Efron 1993]. However, unlike the traditional Monte Carlo method, in which the probability distribution is sampled, the actual process data is sampled repeatedly with replacement. From each resultant sampled data set, a new model is built. With this multitude of models, the model variation and the average model bias is estimated. Prior research has shown that the bootstrap method provides an adequate, if not better, estimation of the standard error of nonparametric model prediction in comparison to alternative asymptotic techniques [Tibshirani 1996]. Figure 5-2 provides a diagram of the general bootstrap methodology.

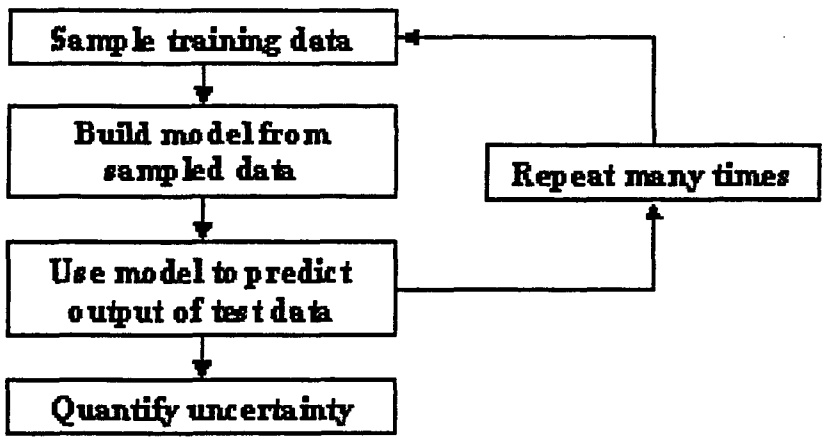

Figure 5-2 Diagram of Bootstrap Method

The bootstrap technique for estimating standard error was developed by Efron in 1979. It requires significant computing power, but this is not a concern for calculations performed off-line on current computers. The basic technique involves sampling an empirical distribution with replacement. The bootstrap algorithm begins by sampling the original data set with replacement resulting in a bootstrap sample $x^* = \left(x_1^*, x_2^*, \ldots, x_n^*\right)$. The sample contains n randomly sampled observations, where n is the number of observations in the original data set. This is repeated a large number of times resulting in B independent bootstrap samples: $x^{*1}, x^{*2}, \ldots, x^{*B}$, each of size n. Typical values for B, the number of bootstrap samples, range from 50 to 200 for fairly accurate standard error estimates [Efron 1993]. For each of the B bootstrap runs, a single model of the same architecture is trained with the bootstrap set using the same training method. Each model is then simulated over a set of testing data that is independent from the training data. Using this test data to obtain the uncertainty statistics takes into account

the tendency of the estimator to overfit the training data. Overfitting occurs when the model learns the peculiarities of the data, such as the noise, rather than the true underlying function.

The variance of the model is then estimated using the following equations:

$$\bar{\hat{y}}(x_0) = \frac{1}{B}\sum_{i=1}^{B}\left[\hat{y}_i(x_0)\right] \tag{5.2.2.1}$$

$$\hat{\sigma}^2(x_0) = \frac{1}{B-1}\sum_{i=1}^{B}\left[\hat{y}_i(x_0) - \bar{\hat{y}}(x_0)\right]^2 \tag{5.2.2.2}$$

where B is the number of bootstrap runs,

$\hat{\sigma}^2(x_0)$ is the variance at input x_0,

$\hat{y}_i(x_0)$ is the model output at input x_0,

and $\bar{\hat{y}}(x_0)$ is the mean model prediction.

To estimate the bias, the true signal value must be known. Obviously, this is impossible for OLM, since all the data is collected from sensors that have a certain level of inaccuracy. However, the true signal is often approximated by de-noising the plant-collected data. As its name implies, de-noising removes the process independent noise from the signal, without removing any of the process dynamics. The de-noised signal is thus assumed to represent the true process signal. With the de-noised signal, the bias can be estimated with the following equation

$$bias^2(x_0) = \left[\left(y(x_0) - \bar{\hat{y}}(x_0)\right)^2 - \hat{\sigma}^2(x_0)\right] \tag{5.2.2.3}$$

where $\hat{\sigma}^2(x_0)$ is the variance at input x_0,

$\bar{\hat{y}}(x_0)$ is the mean model prediction,

$y(x_0)$ is the noise-free signal at input x_0 (note that de-noising is discussed in more detail in the following section).

For its application to OLM, the bootstrap method produces an average prediction interval for a given model and is calculated off-line. If the model operates at only one condition, this average will be accurate for the single region. However, if the model covers a larger operating space, the uncertainty will change over the operating region. The analytical methods provide an on-line uncertainty prediction for each query point. Therefore, the predicted uncertainty changes over the operating region. The use of the bootstrap method is applicable to the nuclear power application

because the plant primarily operates at 100% power and what EPRI calls single point monitoring [2004] is used.

5.2.3 Bootstrap Variations

There are many variations of the generic bootstrap method that give similar performance. Some of the most noted variations are the jackknife, bootstrap residuals method, and the block bootstrap. This section considers the Monte Carlo method that Argonne National Laboratory (ANL) developed to perform an uncertainty analysis for MSET. However, Efron [1993] provides a reference on the other various bootstrap approaches.

ANL research applied wavelet de-noising [Miron 2001, 2003] to estimate the "noise free" signal and the statistical properties of the noise. They then applied Monte Carlo techniques to estimate predictive uncertainties in the MSET models [Zavaljevski 2003, 2004]. Thus, rather than directly sampling from the data, the ANL uncertainty analysis samples from the denoised signals and also samples from the signal noise distributions.

The noise is sampled using Latin Hypercube sampling. This sampling method is generally more precise than conventional Monte Carlo sampling, because the full range of the distribution is sampled more evenly and consistently. It also results in fewer bootstrap runs to attain the same confidence in the uncertainty estimates. The sampling method works by segmenting each assumed probability distribution into N non-overlapping intervals, each having equal probability, where N is the number of observations in the training data. Then, a single value is selected at random from each interval, and added onto the de-noised signal as a noise instantiation. This procedure generates N input data sets, with each value from each input being used only once [EPRI 2004c]. From each of the N input data sets, a new model is built. When each model is constructed, it is tested with validation data. The distribution of the predictions forms the basis for the uncertainty quantification. The general methodology used in the ANL uncertainty analysis is shown in Figure 5-3.

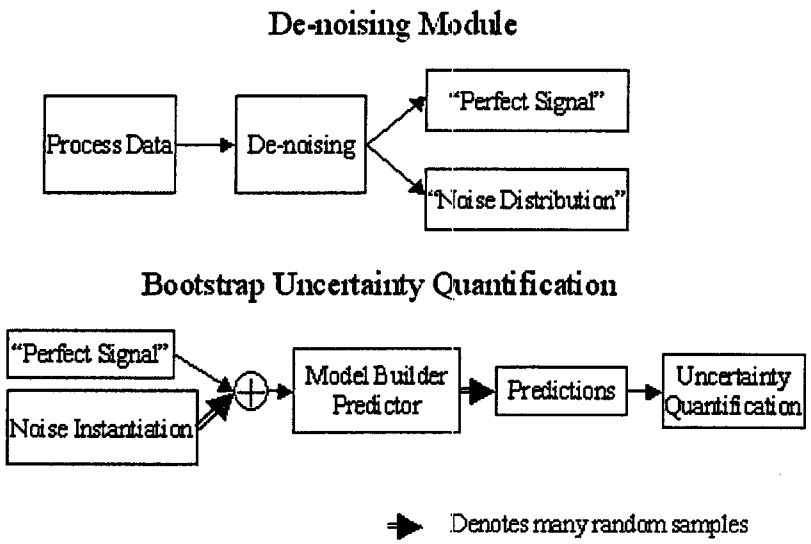

Figure 5-3 ANL Uncertainty Methodology

ANL's preliminary results from this uncertainty analysis showed that the empirical models produced predictions with very small uncertainty values. However, the analysis was specific to the MSET models and data from the VC Summer plant. Subsequently, the MSET models were replaced with another kernel regression variant (ESEE) and the uncertainty results were no longer valid. The plant-specific MSET uncertainty analysis that was completed by Argonne National Laboratory is included in the appendix of EPRI Final Report 1007930, *OnLine Monitoring of Instrument Channel Performance Volume 3: Applications to Nuclear Power Plant Technical Specification Instrumentation* [EPRI 2004c]. However, if another plant wanted to determine the uncertainty of their plant models, data files would have to be sent to ANL and a new analysis would have to be completed. Additionally, if the models were ever changed, the analysis would need to be repeated at ANL. What is needed, and currently under investigation, by the nuclear industry is a general tool that computes the uncertainties inherent in the empirical models without requiring expert ANL oversight.

5.2.4 De-Noising

One of the major issues is the technique used to provide what Argonne calls "Perfect Signal Reconstruction". These "perfect" or noise-free signals are needed to estimate the bias term in the uncertainty analysis, as well as to quantify the noise, and its distribution, present in each sensor input. The technique, termed the Stochastic Parameter Simulation System (SPSS), is a wavelet based technique originally developed by Miron [2001] to whiten residuals for input to the Sequential Probability Ration Test (SPRT) which was used in the past for drift detection. The SPRT is developed under the assumptions of white residuals, meaning that each residual is uncorrelated with itself over time. The SPSS method was developed as an alternative to the Reactor Parameter Signal Simulator (RPSS) developed at ANL [Gross 1993] for SPRT residual

whitening. The SPSS was also used to estimate noise free signals so that noise distributions could be quantified so that the Latin Hypercube Sampling technique could be applied.

The Independent Component Analysis (ICA) algorithm which has been applied to sensor calibration monitoring [Ding 2004] could be used as an alternative to the wavelet-based approach. It is assumed that since the sensors in on-line monitoring are all redundant, the ICA technique will perform as well as, or better than, the wavelet de-noising technique in estimating the true process measurement. ICA is only applicable to stationary signals. However, with single point monitoring in effect, it is expected to be a valid technique. An investigation of ICA for de-noising and comparison of it with the wavelet technique will be included in Volume II of this NUREG/CR.

Miron's SPSS program is used to analyze steady state plant signals. It decomposes the signal into its deterministic and stochastic components, and then reconstructs a new, simulated signal that possesses the same statistical noise characteristics as the actual signal for use in the Monte Carlo based uncertainty analysis. It is also used as a filtering device. For filtering, it isolates the principal serially-correlated, deterministic components from the analyzed signal so that the remaining stochastic signal can be analyzed with signal validation tools. The wavelet de-noising function decomposes the signal into its low frequency (approximation) and high frequency (detail) components. This decomposition is illustrated in Figure 5-4.

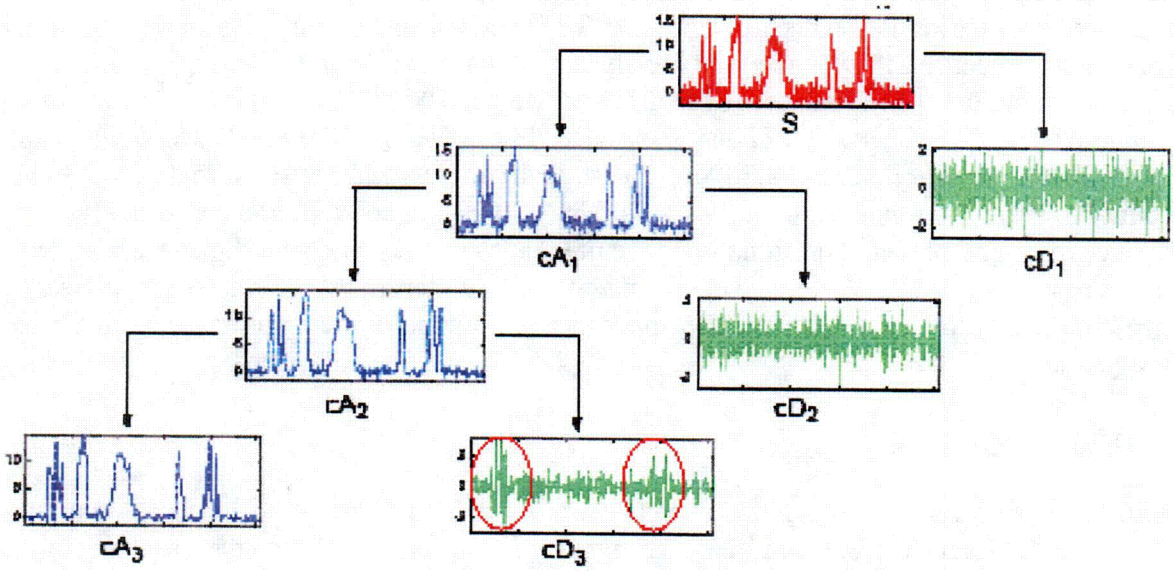

Figure 5-4 Wavelet-based Signal Decomposition

The decomposition produces a set of coefficients of the discreet wavelet transform. The coefficients of each successive level correspond to lower and lower frequencies. Therefore, when a signal is reconstructed from the coefficients, the low level detail coefficients represent the high frequency noise, but as the decomposition continues the coefficients begin to incorporate some of

the low frequency signal components. Miron [2001] assumes that the process noise is white and normally distributed. Thus, tests are used to see if these criteria are met at each level of the decomposition. Only when these criteria are met, is it assumed that none of the process dynamic is included in the noise estimate, and de-noising can be stopped. The basic method of wavelet de-noising is shown in Figure 5-5.

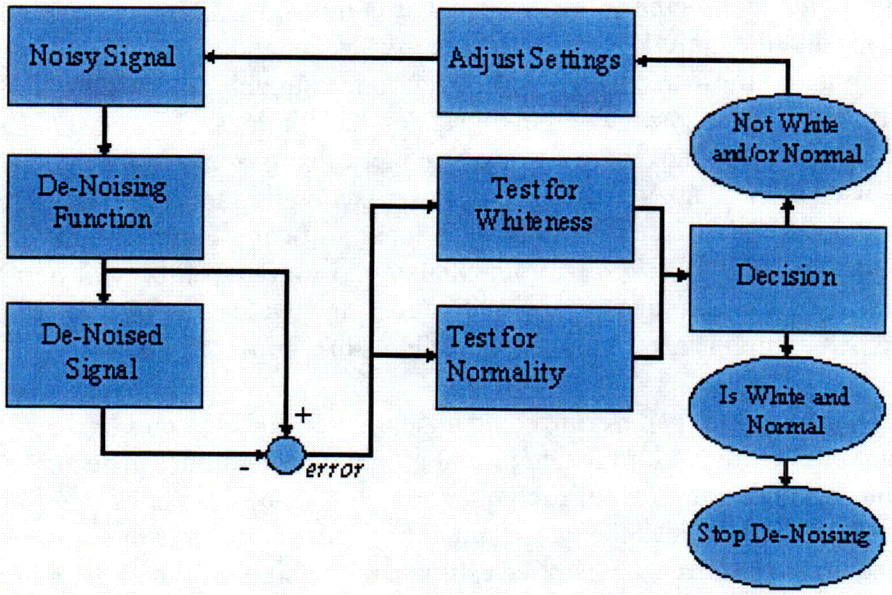

Figure 5-5 Diagram of Wavelet De-Noising Process

For OLM, there are multiple sensors which are correlated over time. This fact provides more information that can be used to better determine the appropriate level of signal decomposition. Thus, Miron's technique incorporates not only the auto-correlation of the noise, but also the correlation of the noise between the multiple signals to ensure that none of the process dynamics are present in the filtered noise.

Since Miron's method of wavelet de-noising is a newly developed technique, more research is needed to verify its assumptions, performance, and efficiency. However, it initially appears to be an accurate and viable filtering technique that could improve the uncertainty analysis of many OLM methods. The major concern is that the assumption that the noise is normally distributed may not be met. This is a common assumption because the central limit theorem shows that when many noise distributions are added, they tend towards a Gaussian distribution; however, actual noise distributions are not necessarily Gaussian in practice.

C05

6. CONCLUSIONS AND FUTURE CHALLENGES

6.1 Summary

This report provides a background of several redundant and non-redundant techniques currently being used to monitor the calibration of nuclear plant instrument channels. The redundant techniques are a simple averaging algorithm (ICMP) and an advanced factor analysis method (ICA). The non-redundant methods are a kernel-based method (MSET), a neural network-based method (PEANO and the University of Tennessee AANN)), and a transformation method (NLPLS). Although all these techniques have been found suitable for OLM, the majority of U.S. nuclear power plants have chosen a kernel regression technique, such as MSET, as their preferred OLM method. SmartSignal Inc. is the current provider of software using the MSET algorithm and it is being used at the Palo Verde Nuclear Power Generation units. Expert Microsystem is also implementing a similar technique in its SureSense software that is being used by utilities that are associated with the EPRI OLM Implementation Program. Initially Expert Microsystem used the MSET algorithm, but due to patent litigation, they were compelled to change the algorithm to ESEE, which is a kernel regression algorithm similar to MSET.

Additionally, this report briefly describes both an analytical and a Monte Carlo method used to quantify the uncertainty inherent in the empirical predictive techniques. The analytical technique provides new uncertainty intervals for each query point. In contrast, the Monte Carlo-based technique statistically determines the uncertainty of a model at a single operating point. The Monte Carlo technique requires a noise free estimate of the signals, which is provided through the use of wavelet-based de-noising techniques.

The appendices in this report are expected to be a valuable resource for evaluators by summarizing relevant literature including research reports, published journal articles, EPRI technical reports, standards and other documents that contain information necessary for a detailed understanding of the on line monitoring technologies and their implementation for instrument channel performance monitoring. A matrix is provided that cross-references the fourteen SER requirements to the related literature including a table that directs the reviewer to the related portion of the document.

6.2 Limitations of the Methods

There are many factors that may limit the application and usefulness of the predictive modeling methods. First, the uncertainty inherent in the model predictions must be correctly and accurately quantified. The magnitude of the uncertainty could limit the model's application. If the uncertainty value is greater than the allowable drift limit, there will be no confidence that the sensor has not drifted past the limit, even if the prediction is within its allowable range.

Another limitation is that the model can only operate within the region of the error free training data. The described empirical models are unable to extrapolate outside the range in which they

have been trained. Thus, if the input data falls outside of the training space, there is no confidence in the model's prediction for that input. Also inherent to this limitation is that the training data must be error free. If the training data includes sensor values that have drifted, those drifts will be considered as normal conditions and future good data may be considered as drifted or future drifted data may not be properly tracked.

Finally, the methods are limited by the fact that they are only monitoring data at a single point, or small region, in the process span. The concern with single-point monitoring is that there is no way to verify that the instrument is in-calibration at a different point in the span, such as the trip setpoint, since the model is designed to operate only at the single point where training data has been collected. EPRI research studied this limitation and provided a method to impose additional restrictions on the techniques to be conservative. These limitations constitute the basis of the challenges faced in the implementation of OLM and are more specifically discussed in the following sections.

6.3 Potential Issues and Challenges

There are several potential issues and challenges to the application of empirical modeling techniques for on-line monitoring of instrument channel calibration, which are introduced below. A detailed analysis of these issues will be performed to quantify their influence on the applicability of these methods and will be reported in future NUREG/CR's.

6.3.1 Data Assumptions

Several assumptions are made in the analysis that deal with the data used to develop the empirical model. The most glaring assumption is that the "training" data is correct and does not have drift. Since the data relationship and correlations are used to correct potentially drifting data during the operational mode, if the data is incorrect, it will tend to make the predictions incorrect. To precisely quantify this effect, future studies will be performed to determine how slight errors in training data will affect the accuracy and uncertainty analysis of the model.

6.3.2 Modeling Assumptions

There are several assumptions made during the model development. These include but are not necessarily limited to:

- The training data covers the entire operating space where the model will be operating. (This assumption is further addressed in Section 6.3.4.)
- The optimal number of prototype vectors has been included in the model development.
- The model has the correct complexity with respect to the underlying relationships being modeled.

These assumptions may not invalidate the techniques but may increase the uncertainty inherent in the predictions. It is important that the uncertainty analysis correctly takes these issues into consideration and future study will verify this.

6.3.3 Uncertainty Analysis Assumptions

There are also several assumptions made in the application of the various uncertainty analysis algorithms. The Monte Carlo methods make use of an estimate of the "true value" of the sensor. Two methods, ICA and wavelet de-noising, are proposed for this task. Each of these methods has its own assumptions. For example, the ICA algorithm requires the signals to be stationary. These assumptions and their effect on predictive uncertainty must be investigated and quantified.

The uncertainty analysis methods also have various assumptions. An example is that the analytical techniques used to date assume that the variance portion of uncertainty is much larger than the bias portion. Future research will examine and attempt to quantify the overall effect of this assumption.

In addition to validating the uncertain analysis for their chosen OLM technique, the plant must confirm that the prediction uncertainty value is not large enough to invalidate the effectiveness of OLM. If the technique's predictive uncertainty is too great, the acceptable band may be reduced to the point that it no longer covers the sensor's normal operating region. In other words, if the uncertainty is larger than the allowable drift, then there is zero confidence that the sensor has not drifted past its limit. Thus, in filing a license amendment, the plant should be able to demonstrate that the estimated predictive uncertainty value was correctly calculated and is small enough to allow a sensor to function in its normal operating range.

6.3.4 Operational Assumptions

There are several assumptions inherent in the application of these techniques. For example, it is assumed that the model is operating within its training range. Seasonal variations, equipment repair or failure, and system operating changes can all cause a change in operating conditions. When the operating conditions change, the training data is no longer representative of the true operating state of the plant and the model must be retrained with new data that is characteristic of the plant's current operating state. If the model is operating outside of its training range, no confidence can be given to the model's prediction and the uncertainty needs to increase. The analytical methods for uncertainty estimation will correctly increase the uncertainty estimates, but the Monte Carlo-based method will not be affected since its predictive uncertainty is an average estimated over the "single point" operating range. This averaging is permissible in situations in which the operating range is small and covered by the training data (single point monitoring instances). However, some operational process needs to be in place to ensure that the model is operating within the training region. The PEANO system developed by the Halden Reactor Project in Norway has a reliability assessment module, which verifies that the model is operating within the training region. A similar module should be integrated into all OLM

systems, and procedures should be in place that define how to proceed when the model's training data no longer covers the operating space. Volume II of this NUREG/CR will consider the influence of these assumptions in greater detail. It will examine and quantify how operating outside of the training region will impact both the analytically and Monte-Carlo derived uncertainty estimates.

6.3.5 Single-Point Monitoring Penalty

At issue in single-point monitoring is the probability that, although a sensor appears to be in calibration at the operating point, the sensor may be out of calibration at another point in the process span. Since the data for on-line monitoring is taken only when the plant is operating at full power, resulting in few variations of the process parameter, this issue becomes highly relevant in determining the ability of on-line monitoring to detect drift. EPRI conducted a large drift study using historical data from over 6,000 calibrations. The results from this study proved that on-line monitoring was still valid even when the process is operating at a single point. However, to encompass the added uncertainty when the plant is operating with very little process change, a single-point monitoring penalty must be included with the other uncertainty terms in the drift allowance calculation. EPRI TR-104965, *On-Line Monitoring of Instrument Channel Performance*, presents the results from the EPRI drift study and describes the method for calculating the single-point monitoring penalty. It is the plant's responsibility to ensure that the single-point monitoring penalty is correctly calculated for each of the instruments in the on-line monitoring system. If the instrument was included in the EPRI drift study, then the generic EPRI-calculated penalty can be used. However, for instruments not included in the EPRI drift study, the single-point monitoring penalty must be calculated using historical calibration data. If this data is unavailable or if too little data is available, the plant must show that the generic EPRI penalty for a similar instrument is applicable. Determining if the EPRI penalties are applicable to instruments other than those actually included in the EPRI drift study could present a challenge.

6.3.6 Effect on Other Requirements

The implementation of condition directed maintenance strategies might affect other safety related requirements. For example, response time testing requirements have been relaxed because it is assumed that technicians performing calibrations will notice if an instrument channel is sluggish. Since technicians may not be able to judge this, it must be determined whether other methods of response time testing should be required, or if other checks will verify the correct response time of the instruments.

6.3.7 Common Mode Failure Detection

There may be regulatory concern over several of the proposed redundant techniques' inability to identify drift when the instruments exhibit common mode failure, which is when all the sensors drift in the same direction at a common rate. However, at the end of each fuel cycle one of the sensors will undergo a manual calibration check which will reveal a common mode failure if one

exists. Currently, calibration procedures also only reveal these types of common mode failures during a calibration check performed at the end of a fuel cycle. The NRC SER specifically states that the proposed on-line monitoring technique is only required to perform the requisite "designated functions better than, or as good as, the current traditional calibration." Since the current calibration practices cannot detect common mode failure during plant operation, the fact that a redundant technique also cannot detect common mode failures while the plant is operating should in no way invalidate the technique. Additionally, EPRI drift studies have shown that the common mode failures are extremely uncommon with few occurrences over several decades of fleet operational experience [EPRI 2000]. However, the plant must have procedures in place that ensure that if the manual calibration check shows a sensor's calibration condition to be different than expected, then all of the remaining redundant sensors in the group also must be calibrated to guard against common mode failure. Additionally, these procedures should reflect the fact that if a sensor is found in an unexpected calibration condition, an investigation should be performed to determine the root cause of the problem.

6.3.8 Software Verification and Validation

As stated in Requirement 13 of the NRC SE, all software used in the implementation must be verified and validated and meet all quality requirements in accordance with NRC guidance and acceptable industry standards. Previous research has completed the necessary verification and validation (V&V) documentation for the SureSense Diagnostic Monitoring Studio, Version 1.4, MSET software. This V&V report is provided as an appendix in *On-Line Monitoring of Instrument Channel Performance Volume 3: Applications to Nuclear Power Plant Technical Specification Instrumentation* [EPRI 2004c]. However, the version of the software for which the V&V was conducted is now obsolete, and at present, the V&V documentation for the current version of SureSense that uses the ESEE algorithm is not available for review. No other currently available OLM software has been marketed as having gone through a standardized V&V process. Thus, in filing a license amendment, the plant should be able to demonstrate that the necessary V&V activities have been performed in support of the current version of the plant's OLM software.

6.3.9 Financial Considerations

EPRI's *On-Line Monitoring Cost Benefit Guide* reports that the payback period for OLM is on the order of 5 to 10 years, or possibly never, depending on the number of sensors that qualify for calibration extension [EPRI 2003]. This estimate is based only on the savings from having to perform fewer calibrations at each fuel outage. Since the payback is so long or may be nonexistent, the utilities are probably considering implementation of these techniques because of the indirect benefits. To make this sort of investment, utilities may expect to get reductions in radiation exposure, more information as to the condition of their equipment so as to minimize uncertainty in their outage schedules, and improved safety. These indirect benefits are difficult to quantify *a priori*. Thus, it may prove challenging for utilities to look past the long payback period and realize the other benefits of implementing OLM.

6.3.10 Employee Training

For an OLM system to be successfully implemented, personnel from the plant's Engineering and IT departments will have to be properly trained. Both groups must have some understanding of the OLM system theory and functionality. The IT department, especially, must understand the computational and data system requirements. In particular, the process of collecting data and making it available often requires much technical support from the IT department. In filing a license amendment, the plant should be able to demonstrate the involved employees have the necessary training and knowledge to correctly implement and support an OLM system.

6.3.11 Quarterly Monitoring

Originally, EPRI assumed that OLM would be performed continuously; however, they have shifted to a periodic procedure. The SER stated that quarterly monitoring is acceptable, so it is probable that some plants applying for a license amendment will wish to perform OLM on a quarterly basis. The only potential issue that arises when not applying OLM continuously is that an additional margin must be subtracted from the drift limits *(ADVOLM* and *MAVD)* equal to the amount an instrument may drift in the next three months. This margin was discussed in Section 1.3.2. Care must be taken to make sure plants have accounted for this margin, and that they understand that they can not switch from a continuos to quarterly surveillance OLM system without recalculating the *ADVOLM* and *MAVD*.

6.4 Future Work

Several of these challenges will be investigated in detail in future NUREG/CRs related to this study. Specifically, Volume II of this NUREG/CR will provide a theoretical analysis of the monitoring and uncertainty prediction techniques. Another future NUREG/CR will include an analysis of all assumptions and will test these assumptions on various data sets that contain limiting cases. These future reports will provide evaluators with an independent analysis of how specific techniques, currently being investigated by EPRI and several utilities, meet the requirements outlined in the NRC SER.

7. REFERENCES

ANSI/ISA–67.04.01 (2000), "Setpoints for Nuclear Safety-Related Instrumentation," ISA, Research Triangle Park.

Black, C.L., R.E. Uhrig, and J.W. Hines (1998), "System Modeling and Instrument Calibration Verification with a Non-linear State Estimation Technique," Proc. Maintenance and Reliability Conference (MARCON 98), Knoxville, TN, May 12-14.

Carney, J.G., P. Cunningham, and U. Bhagwan, (1999), "Confidence and Prediction Intervals for Neural Network Ensembles," IEEE International Joint Conference on Neural Networks, pp. 1215-1218.

Cherkassky V. and F. Mulier (1998), *Learning From Data*, John Wiley & Sons, ISBN 0-47115493-8.

Coppock, S. and T. Hopton (2003), "Advanced Software Detects Temperature Indicator Failure", *Transactions of the American Nuclear Society*, New Orleans, LA, Nov.

Crowe, C.M. (1996), "Data Reconciliation – Progress and Challenges" J. Proc. Cont. 6, 89-98.

Ding, J., B. Rasmussen, and J. W. Hines (2003), "Redundant Sensor Calibration Monitoring and Reduction System Project," final project report to the Electric Power Research Institute.

Ding, J., (2004), "Independent Component Analysis for Sensor Validation," Ph.D. Dissertation, University of Tennessee, Knoxville, TN.

Efron B., and R.J. Tibshirani (1993), *An Introduction to the Bootstrap*, Chapman and Hall, NY.

EPRI (1993a), TR-103436-V1, "Instrument Calibration and Monitoring Program, Volume 1: Basis for the Method," EPRI, Palo Alto, CA.

EPRI (1993b), TR-103436-V2, "Instrument Calibration and Monitoring Program, Volume 2: Failure Modes and Effects Analysis," EPRI, Palo Alto, CA.

EPRI (1995), "Monte Carlo Simulation and Uncertainty Analysis of the Instrument Calibration and Monitoring Program," WO3785-02, EPRI, Palo Alto, CA.

EPRI (2000),"On-Line Monitoring of Instrument Channel Performance," Topical Report 104965-R1, EPRI, Palo Alto, CA.

EPRI (2003), "On-Line Monitoring Cost Benefit Guide," Final Report 1006777, EPRI, Palo Alto, CA.

EPRI (2004a), "On-Line Monitoring of Instrument Channel Performance Volume 1: Guidelines for Model Development and Implementation," Final Report # 1003361, EPRI, Palo Alto, CA.

EPRI (2004b), "On-Line Monitoring of Instrument Channel Performance Volume 2: Model Examples, Algorithm Descriptions, & Additional Results," Final Report # 1003579, EPRI, Palo Alto, CA.

EPRI (2004c), "On-Line Monitoring of Instrument Channel Performance Volume 3: Applications to Nuclear Power Plant Technical Specification Instrumentation," Final Report # 1007930, EPRI, Palo Alto, CA.

Fantoni, P., S. Figedy, A. Racz, (1998), "A Neuro-Fuzzy Model Applied to Full Range Signal Validation of PWR Nuclear Power Plant Data," 2nd International Conference on Fuzzy Logic and Intelligent Technologies in Nuclear Science (FLINS), Antwerpen, Belgium.

Fantoni, P. (1999), "On-Line Calibration Monitoring of Process Instrumentation in Power Plants," EPRI Plant Maintenance Conference, Atlanta, GA, June.

Fantoni, P., M. Hoffmann, B. Rasmussen, J.W. Hines, and A. Kirschner (2002), "The Use of Non Linear Partial Least Square Methods for On-line Process Monitoring as an Alternative to Artificial Neural Networks," 5th International Conference on Fuzzy Logic and Intelligent Technologies in Nuclear Science (FLINS), Gent, Belgium, Sept. 16-18.

Fantoni, P. (2005), Experiences and Applications of PEANO for On-line Monitoring in Power Plants, *Progress in Nuclear Energy* for a special issue on *Lessons Learned from Computational Intelligence in Nuclear Applications*, "in press", Elsevier.

Favennec, A. Viette, P. Ambos, M. Kuntz (2003), "Improving power plant performance with process data reconciliation", J.M, ISA The Instrumentation, Systems and Automation Society14th Annual Joint ISA/POWID/EPRI Controls and Instrumentation Conference.

Frank, P.M. (1987), "Fault Detection in Dynamic Systems via State Estimation -A Survey," in Tzafestas, S., M. Singh and G. Schmidt (Eds.), *System Fault Diagnostics, Reliability and Related Knowledge-Based Approaches*, Reidel, Dordrecht, 1, pp. 35-98.

Geldi, P. and B. Kowalski (1986), "Partial Least Squares Regression: A Tutorial," *Analytica Chemica Acta*, 185, pp. 1-17.

Gertler, J. (1988), "Survey of Model Based Failure Detection and Isolation in Complex Plants," *IEEE Control Systems Magazine*, pp. 3-11.

Gribok, A.V., J.W. Hines, and R.E. Uhrig (2000), "Use of Kernel Based Techniques for Sensor Validation in Nuclear Power Plants," American Nuclear Society International Topical Meeting

on Nuclear Plant Instrumentation, Controls, and Human-Machine Interface Technologies (NPIC&HMIT 2000), Washington, DC, November.

Gribok, A.V., A. M. Urmanov, and J.W. Hines (2004), "Uncertainty Analysis of Memory Based Sensor Validation Techniques," *Real Time Systems*, 27, pp. 7-26.

Griebenow, R.D., A.L. Sudduth (1995), "Applied Pattern Recognition for Plant Monitoring and Data Validation," The1995 ISA POWID Conference.

Gross, K.C. (1992), "Spectrum-Transformed Sequential Testing Method for Signal Validation Applications," Proc. 8th Power Plant Dynamics, Control & Testing Symp., Knoxville, TN, pp. 36.01-36.12.

Gross, K.C., K.K. Hoyer (1993), "Reactor Parameter Signal Simulator," Fourth International Conference on Simulation Methods in Nuclear Engineering, 1, Montreal, Canada.

Gross, K.C., R.M. Singer, S.W. Wegerich, J.P. Herzog, R. VanAlstine, and F. Bockhorst (1997), "Application of a Model-based Fault Detection System to Nuclear Plant Signals," Proceedings, Intelligent System Applications to Power Systems, ISAP, Seoul, Korea, July 6-10, pp. 66-70.

Gross, K.C., S. W. Wegerich, R. M. Singer, and J. E. Mott (1998), "Industrial Process Surveillance System," U.S. Patent #5,764,509.

Hansen, E.J., and M.B. Caudill (1994), "Similarity Based Regression: Applied Advanced Pattern Recognition for Power Plant Analysis," EPRI-ASME Heat Rate Improvement Conference, Baltimore, MD.

Hines, J.W., and D.J. Wrest (1997), "Signal Validation Using an Adaptive Neural Fuzzy Inference System," *Nuclear Technology*, pp. 181-193.

Hines, J.W., and R.E. Uhrig (1998), "Use of Autoassociative Neural Networks for Signal Validation," *Journal of Intelligent and Robotic Systems*, Kluwer Academic Press, pp.143-154.

Hines, J.W., A.V. Gribok, I. Attieh, and R.E. Uhrig (1999), "Regularization Methods for Inferential Sensing in Nuclear Power Plants," *Fuzzy Systems and Soft Computing in Nuclear Engineering*, Ed. Da Ruan, Springer.

Hines, J.W., A.V. Gribok, I. Attieh, and R.E. Uhrig (2000), "Neural Network Regularization Techniques for a Sensor Validation System," *Transactions of the American Nuclear Society*, San Diego, CA.

Hines, J.W., A. Usynin, and S. Wegerich (2004a), "Autoassociative Model Input Variable Selection for Process Modeling," 58th Meeting of the Society for Machinery Failure Prevention

Technology, Virginia Beach, VA, April 26-30.

Hines, J.W., and A. Usynin (2004b), "On-Line Monitoring Robustness Measures and Comparison," International Atomic Energy Agency Technical Meeting on "Increasing Instrument Calibration Interval through On-line Calibration Technology", OECD Halden Reactor Project, Halden, Norway, 27th-29th Sept.

Hines, J.W., and A. Usynin (2005a), "MSET Performance Optimization through Regularization," Nuclear Engineering and Technology, 38(2).

Hines, J.W., and E. Davis (2005b), "Lessons Learned From the U.S. Nuclear Power Plant On-Line Monitoring Programs", *Progress in Nuclear Energy* for a special issue on *Lessons Learned from Computational Intelligence in Nuclear Applications*, Elsevier.

Hoskuldsson, A. (1988), "PLS Regression Methods," *Journal of Chemometrics*, 2, pp. 211-228.

Hyvarinen, A., J. Karhunen, and E. Oja (2001), Independent Component Analysis, John Wiley and Sons, NY.

ISA-RP67.04.02 (2000), "Methodologies for the Determination of Setpoints for Nuclear Safety-Related Instrumentation" ISA, Research Triangle Park, NC.

Isermann, R. (1984), "Process Fault Detection Based on Modeling and Estimation MethodsA Survey," *Automatica*, 20(4), pp. 381-404.

Jordache, S., and C. (2000), "Data Reconciliation & Gross Error Detection", Gulf Publishing Company, Houston Texas.

Kuehn, D.R., and H. Davidson (1961), "Computer Control II . Mathematics of Control", Chem. Eng. Progress, 57, 44-47.

Knepper, J.C., and J.W. Gorman (1980), "Statistical Analysis of Constrained Data Sets", AIChE Journal, 26, 260-264.

Kirschner, A. (2003) "PEANO is Testing the Implementation of a new NLPLS Algorithm", Halden On-line Monitoring User Group (HOLMUG) Newsletter, No 1., June, p. 3.

Kramer, M.A. (1992), "Autoassociative Neural Networks," *Computers in Chemical Engineering*, 16(4), pp. 313-328.

Liebman, M.J., T.F. Edgar, and L.S. Lasdon (1992), Efficient Data Reconciliation and Estimation for Dynamic Processes Using Non-Linear Programming Techniques", Computers Chem. Engng., 16, 963-986.

Lillis, D. (2004), "Condition Based Calibration of Safety Category Sensors at Sizewell 'B' NPP", International Atomic Energy Agency Technical Meeting on "Increasing Instrument Calibration Interval through On-line Calibration Technology", OECD Halden Reactor Project, Halden, Norway, 27th-29th Sept.

Miron, A., (2001), "A Wavelet Approach for Development and Application of a Stochastic Parameter Simulation System," Ph.D. Dissertation, University of Cincinnati, Cincinnati, OH.

Miron, A., and J. Christenson (2003), "The Stochastic Parameter Simulation System: A Wavelet-based Methodology for Perfect Signal Reconstruction," ANS Topical Meeting in Mathematics and Computations, Gatlinburg, TN.

Mott, Young, and R.W. King (1987), "Pattern Recognition Software for Plant Surveillance," U.S. DOE Report.

NRC Project no. 669 (2000), "Safety Evaluation by the Office of Nuclear Reactor Regulation: Application of On-line Performance Monitoring to Extend Calibration Intervals of Instrument Channel Calibrations Required by the Technical Specifications - EPRI Topical Report (TR) 104965 *On-Line Monitoring of Instrument Channel Performance*," U.S. Nuclear Regulatory Commission: Washington, D.C., July, 2000.

NRC Regulatory Guide 1.105 (1999), "Setpoints For Safety-Related Instrumentation," U.S. Nuclear Regulatory Commission, Revision 3.

NUREG/CR-5903 (1993), Hashemian, H. M., "Validation of Smart Sensor Technologies for Instrument Calibration Reduction in Power Plants," U.S. Nuclear Regulatory Commission, Washington, D.C..

NUREG/CR-6343 (1995), Hashemian, H. M., "On-Line Testing of Calibration of Process Instrumentation Channels in Nuclear Power Plants," Phase II Final Report," U.S. Nuclear Regulatory Commission, Washington, D.C..

Qin, S.J., and T.J. McAvoy (1992), "Nonlinear PLS Modeling Using Neural Networks," *Computers in Chemical Engineering*, 16(4), pp. 379-391.

Qin, S.J., and W. Li (1999), "Detection, Identification, and Reconstruction of Faulty Sensors with Maximized Sensitivity," AIChE J., 45(9).

Rasmussen, B., J.W. Hines, and R.E. Uhrig (2000a), "Nonlinear Partial Least Squares Modeling for Instrument Surveillance and Calibration Verification," Proc. Maintenance and Reliability Conference (MARCON 2000), Knoxville, TN, May 7-10.

Rasmussen, B., J.W. Hines, and R.E. Uhrig (2000b), "A Novel Approach to Process Modeling for Instrument Surveillance and Calibration Verification," Proc. Third American Nuclear Society International Topical Meeting on Nuclear Plant Instrumentation and Control and Human-Machine Interface Technologies, Washington, D.C., November 13-17.

Rasmussen, B., E. Davis, and J. W. Hines (2002a),"Monte Carlo Analysis and Evaluation of the Instrumentation and Calibration Monitoring Program," Proc. Maintenance and Reliability Conference (MARCON 2002), Knoxville, TN, May 7-10.

Rasmussen, B., P.F. Fantoni, M. Hoffman, and J.W. Hines (2002b), "Instrument Surveillance and Calibration Verification: A Case Study Using Two Empirical Modeling Paradigms," Proc. Maintenance and Reliability Conference (MARCON 2002), Knoxville, TN, May.

Rasmussen, B. (2003a), "Prediction Interval Estimation Techniques for Empirical Modeling Strategies and their Applications to Signal Validation Tasks," Ph.D. Dissertation, Nuclear Engineering Department, The University of Tennessee, Knoxville, TN.

Rasmussen, B., J.W. Hines, and A.V. Gribok (2003b), "An Applied Comparison of the Prediction Intervals of Common Empirical Modeling Strategies," Proc. Maintenance and Reliability Conference, Knoxville, TN.

Rasmussen, B., and J.W. Hines (2004), "Uncertainty Estimation Techniques for Empirical Model Based Condition Monitoring", 6th International Conference on Fuzzy Logic and Intelligent Technologies in Nuclear Science, Blankenberge, Belgium, Sept 1-4.

Rollins, D.K., S. devenathan, M.V.B. Bascunana (2002), "Measurement Bias Detection in Linear Dynamic Systems", Computers in Chamical Engineering, 26, 1201-1211.

Singer, R.M., K.C. Gross, and R.W. King, (1994), "Analytical Enhancement of Automotive Sensory System Reliability," Presented at the World Congress on Neural Networks, San Diego, CA.

Singer, R.M., K.C. Gross, J.P. Herzog, R.W. King, and S.W. Wegerich (1996), "Model-Based Nuclear Power Plant Monitoring and Fault Detection: Theoretical Foundations," Proc. 9th Intl. Conf. on Intelligent Systems Applications to Power Systems, Seoul, Korea.

Stanley, G.M. and R.S.H. Mah (1977), "Estimation of Flows and Temperatures in Process Networks", AIChE Journal, 23, pp. 642-650.

Streit, S., M. Langensetein, and H. Eitschberger (2005), "A New Method of Evaluation and Correction of Thernal Reactor Power and Present Operational Applications", Proceedings of the 13th International Conference on Nuclear Engineering (ICONE13), May 16-20, 2005, Beijing China.

Tibshirani, R. (1996), "A Comparison of Some Error Estimates for Neural Network Models," *Neural Computation*, 8, pp.152-163.

Upadhyaya, B.R. (1985), "Sensor Failure Detection and Estimation," *Journal of Nuclear Safety*, 26(1), pp. 23-32.

Upadhyaya , B.R., and K. Holbert (1989), "Development and Testing of an Integrated Signal Validation System for Nuclear Power Plants," DOE Contract DE-AC02-86NE37959.

Upadhyaya, B.R., and E. Eryurek (1992), "Application of Neural Networks for Sensor Validation and Plant Monitoring," *Nuclear Technology*, 97, pp. 170-176.

VDI 2048 (200), "Uncertainties of Measurement During Acceptance Tests on Energy-conversion and Power Plants", October 2000 - German guideline.

Wald, A. (1945), "Sequential Tests of Statistical Hypothesis," *Ann. Math. Statist.*, 16, pp.117-186.

Wegerich, S., R. Singer, J. Herzog, and A. Wilks (2001), "Challenges Facing Equipment Condition Monitoring Systems," Proc. Maintenance and Reliability Conference, Gatlinburg TN, May 6-9.

Wolpert, D. H., and W. G. Macready (1997), "No Free Lunch Theorems for Optimization," *IEEE Transactions on Evolutionary Computation*, 1(1), pp. 67-82.

Xu, X., J.W. Hines, and R.E. Uhrig (1999), "Sensor Validation and Fault Detection Using Neural Networks," Proc. Maintenance and Reliability Conference (MARCON 99), Gatlinburg, TN, May 10-12.

Yu, C., and B. Su (2001), "A Nonparametric Sequential Probability Ratio Test for Signal Validation," 2001 ANS/HPS Student Conference, Texas A&M University.

Zavaljevski, N., K. Gross, and S. Wegerich (1999), "Regularization Methods for the Multivariate State Estimation Technique (MSET)," Proc. of the Int. Conf. on Mathematics and Computation, Reactor Physics and Environmental Analysis in Nuclear Applications, September 27-30, Madrid, Spain, pp. 720-729.

Zavaljevski, N. (2003), "Uncertainty Analysis for the Multivariate State Estimation Technique (MSET) Based on Latin Hypercube Sampling and Wavelet De-Noising," *Transactions of the American Nuclear Society*, 89, pp.19-21.

Appendix

During the course of this research of on-line sensor calibration monitoring techniques, over 200 technical papers, research reports, standards, and other pertinent documents were reviewed. The following 33 documents were found to be especially relevant when evaluating the safety and regulatory issues discussed in the safety analysis report. Therefore, the appendix is organized in the following manner. First, a list of the 33 documents with a complete reference for each is given. Next, a matrix is provided that cross-references each relevant document with the NRC requirements. Because many of the documents included in the reference list are so large, a location guide that gives the specific sections of the document that pertain to the requirement is also provided. The appendix then contains a brief discussion that describes how the reviewed documents pertain to each of the NRC Safety Evaluation requirements. A short summary of the documents is also provided. The summary of each document focuses on the aspects of the document that are related to the implementation of on-line sensor calibration monitoring. Because several of the EPRI documents are being updated and redistributed, this should not be considered a complete reference to all available on-line monitoring documents.

The literature highlights the developments of on-line monitoring to date and also clarifies what future work is needed to make on-line monitoring a reality. Many of the documents present the theoretical and technical details necessary to understand the advantages and limitations of each of the techniques being considered for on-line monitoring. Collectively, these documents outline the benefits of on-line monitoring, while still accurately assessing the challenges that will have to be overcome before large-scale implementation is possible. These challenges include quantifying the predictive uncertainty; bounding the impact of the assumptions made related to data, models, and operations; and gaining acceptance of single point monitoring through an additional penalty term.

A.1 List of Relevant Documents

This list includes the documents referenced in the NRC Requirement matrix and the literature summary.

1. ANSI/ISA-67.04.01, "Setpoints for Nuclear Safety-Related Instrumentation," ISA, Research Triangle Park, NC: February 2000.

2. ANSI/ISA-67.06.01, "Performance Monitoring for Nuclear Safety-Related Instrument Channels in Nuclear Power Plants," ISA, Research Triangle Park, NC: May 2002.

3. Code of Federal Regulations, *Title 10, Energy*, Part 50.36, "Domestic Licensing of Production And Utilization Facilities: Technical Specifications," U.S. Nuclear Regulatory Commission, July 1996.

4. Code of Federal Regulations, *Title 10, Energy,* Part 50, Appendix B, "Domestic Licensing of Production And Utilization Facilities: Quality Assurance Criteria for Nuclear Power Plants and Fuel Reprocessing Plants," U.S. Nuclear Regulatory Commission, January 1975.

5. Dieck, R. H., Measurement Uncertainty: Methods and Applications, 3rd ed., The Instrumentation, Systems, and Automation Society, 2002.

6. Ding, J., B. Rasmussen, and J. W. Hines, "Redundant Sensor Calibration Monitoring and Reduction System Project," final project report to the Electric Power Research Institute, April 2003.

7. Ding, J., Ph.D. Dissertation, "Independent Component Analysis for Sensor Validation," University of Tennessee, Knoxville, Tennessee, August 2004.

8. Efron B., and R.J. Tibshirani, An Introduction to the Bootstrap, Chapman and Hall, New York, 1993.

9. EPRI Final Report 1003361, "On-Line Monitoring of Instrument Channel Performance Volume 1: Guidelines for Model Development and Implementation," EPRI, Palo Alto, CA: December 2004.

10. EPRI Final Report 1003579, "On-Line Monitoring of Instrument Channel Performance Volume 2: Model Examples, Algorithm Descriptions, & Additional Results," EPRI, Palo Alto, CA: December 2004.

11. EPRI Final Report 1007930, "On-Line Monitoring of Instrument Channel Performance Volume 3: Applications to Nuclear Power Plant Technical Specification Instrumentation," EPRI, Palo Alto, CA: December 2004.

12. EPRI Final Report 1006777, "On-Line Monitoring Cost Benefit Guide," EPRI, Palo Alto, CA: November 2003.

13. EPRI TR-103436-V1, "Instrument Calibration and Monitoring Program, Volume 1: Basis for the Method," EPRI, Palo Alto, CA: December 1993.

14. EPRI TR-103436-V2, "Instrument Calibration and Monitoring Program, Volume 2: Failure Modes and Effects Analysis," EPRI, Palo Alto, CA: December 1993.

15. EPRI TR-104965, "On-Line Monitoring of Instrument Channel Performance," EPRI, Palo Alto, CA: September 2000.

16. EPRI WO3785-02, "Monte Carlo Simulation and Uncertainty Analysis of the Instrument Calibration and Monitoring Program," EPRI, Palo Alto, CA: November 1995.

17. Heskes, T., "Practical confidence and prediction intervals," *Advances in Neural Information Processing Systems*, 9, 145-1464, November 1999.

18. Hyvarinen, A., J. Karhunen, and E. Oja, Independent Component Analysis, John Wiley and Sons, New York, 2001.

19. IAEA-TECDOC-2600-29598, "On-Line Calibration Monitoring of Process Instruments in NPPs TecDoc," DRAFT, December 2004.

20. ISA-RP67.04.02-2000, "Methodologies for the Determination of Setpoints for Nuclear Safety-Related Instrumentation," ISA, Research Triangle Park, NC: January 2000.

21. Miron, A., Ph.D. Dissertation, "A Wavelet Approach for Development and Application of a Stochastic Parameter Simulation System," University of Cincinnati, Cincinnati, OH, August 2001.

22. Miron A. and J. Christenson, "The stochastic parameter simulation system: a waveletbased methodology for perfect signal reconstruction," ANS Topical Meeting in Mathematics and Computations, Gatlinburg, TN, 2003.

23. NRC Project No. 669, "Safety evaluation by the office of nuclear reactor regulation: Application of on-line performance monitoring to extend calibration intervals of instrument channel calibrations required by the technical specifications - EPRI Topical Report (TR) 104965 *On-Line Monitoring of Instrument Channel Performance*," U.S. Nuclear Regulatory Commission: Washington, D.C., July, 2000.

24. NRC Regulatory Guide 1.105, "Setpoints For Safety-Related Instrumentation," U.S. Nuclear Regulatory Commission, Washington, D.C., Revision 3, December 1999.

25. NRC Regulatory Guide 1.75, "Physical Independence of Electric Systems," U.S. Nuclear Regulatory Commission, Washington, D.C., Revision 2, September 1978.

26. NUREG/CR-5903, Hashemian, H. M., "Validation of Smart Sensor Technologies for Instrument Calibration Reduction in Power Plants," U.S. Nuclear Regulatory Commission, Washington, D.C., January 1993.

27. NUREG/CR-6343, Hashemian, H. M., "On-Line Testing of Calibration of Process Instrumentation Channels in Nuclear Power Plants," Phase II Final Report," U.S. Nuclear Regulatory Commission, Washington, D.C., November 1995.

28. Papadopoulos, G., P.J. Edwards, and A.F. Murray, "Confidence Estimation Methods for Neural Networks: A Practical Comparison," ESANN'2000 proceedings, European Symposium on Artificial Neural Networks, Bruges, April 2000.

29. Rasmussen, B., E. Davis, and J. W. Hines, "Monte Carlo Analysis and Evaluation of the Instrumentation and Calibration Monitoring Program," Proc. Maintenance and Reliability Conference (MARCON 2002), Knoxville, TN, May 2002.

30. Rasmussen, B., Ph.D. Dissertation, "Prediction Interval Estimation Techniques for Empirical Modeling Strategies and their Applications to Signal Validation Tasks," University of Tennessee, Knoxville, Tennessee, December 2003.

31. Uhrig R. E., "Regulatory Treatment of On-Line Surveillance and Diagnostic Systems," presented at the Halden Workshop on Power Plant Surveillance and Diagnostics, Halden, Norway, September 3-4, 2001.

32. Zavaljevski, N., A. Miron, C. Yu, and T. Y. C. Wei, "A Study Of On-Line Monitoring Uncertainty Based On Latin Hypercube Sampling And Wavelet DeNoising," 4th International Topical Meeting on Nuclear Plant Instrumentation, Control and Human Machine Interface Technology (NPIC&HMIT '04), Columbus OH, September 19-22, 2004.

33. Zavaljevski, N., "Uncertainty Analysis for the Multivariate State Estimation Technique (MSET) Based on Latin Hypercube Sampling and Wavelet DeNoising," Transactions of the American Nuclear Society, 89, 19-21, 2003.

A.2 Requirement Matrix and Locator Guide

This matrix matches the documents (by reference number) that correspond to each of the 14 NRC Staff Requirements for On-Line Monitoring Systems. The list of documents with their reference numbers is located at the end of the appendix in section A.4. The Requirements (114) or on the horizontal axis and the documents (1-33) are on the vertical. The checked boxes indicate that the requirement is related to the cited document.

TABLE A-1 Requirement Matrix Requirement Number

Requirement Number

Document Number	1	2	3	4	5	6	7	8	9	10	11	12	13	14
1					X	X								
2					X	X		X						
3								X						
4					X							X	X	
5	X				X	X	X							
6	X		X		X	X	X							
7	X				X	X	X							
8	X				X	X	X							
9		X												
10	X				X						X	X		
11	X	X	X	X	X	X	X	X	X	X	X	X	X	X
12														
13						X	X	X						
14				X										
15	X			X				X	X	X	X		X	
16	X			X	X	X								
17	X			X	X	X								
18	X													
19										X				
20	X				X			X						
21	X													
22	X													
23	X	X	X	X	X	X	X	X	X	X	X	X	X	X
24					X									
25											X			
26								X			X		X	
27	X													
28	X					X	X							
29	X					X	X							
30	X			X	X	X								
31	X	X	X	X	X	X	X	X	X	X	X	X	X	X
32	X				X	X	X							
33	X				X	X	X							

Because many of the documents included in the matrix were very large volumes, the following table is included to give the specific section(s) of the documents that are relevant to each requirement.

TABLE A-2 Location Guide

Requirement	Pertaining Reference
1	#5 (p9-136), #6 (p14-18), #7, #8(p97-115), #10 (Appendix B), #11 (p2:1, 5:1-21,6:1-14, Appendix D and E), #15 (p3:3-14, Appendix B), #16, #17, #18, #20, #23, #21, #22, #27, #28, #29, #30 (p134 311), #31, #32, #33
2	#9, #11 (p 2:2, 3:1-4, 5:8-14), #23, #31
3	#6, #11 (p 2:2), #14, #23, #31
4	#11 (p 2:3, 5:2-22), #15 (p3:3-14, Appendix B and C), #23, #31
5	#1, #2, #5 (p9-136), #6 (p14-18), #7, #8 (p97-115), #11 (p 2:3, 6:1 14, Appendix D and E), #16, #17, #20, #23, #24, #29, #30 (p134 311), #31, #32, #33
6	#1, #2, #5 (p9-136), #6 (p14-18), #7, #8 (p97-115), #11 (p 2:3, 6:1 14, Appendix D and E), #16, #17, #20, #23, #24, #29, #30 (p134 311), #31, #32, #33
7	1, #2, #5 (p9-136), #6 (p14-18), #7, #8 (p97-115), #11 (p 2:4, 6:1-16, Appendix D and E), #16, #17, #20, #23, #24, #29, #30 (p134-311), #31, #32, #33
8	#2 (p16-21), #3, #11 (p 2:4, 6:1-16, 7:4-5), #13, #15 (p2:1-2:16, 4:2 11), #20, #23, #26 (p8-12), #31
9	#11 (p 2:5, 6:1-16), #15 (p 2:1-16, 4:8-12), #23, #31
10	#11 (p 2:5, 4:5-6, 6:14), #15(p 2:1-16, 4:1-12), #19, #23, #31
11	#11 (p 2:6), #15 (p3:1-2), #23
12	#4, #10, #11 (p 2:6, 7:1-10, Appendix F), #23, #31
13	#4, #11 (p 2:7, 7:1-10), #15 (p3:1-2), #23, #26 (p18-41), #31
14	#11 (p 2:7, 7:1-10, Appendix F), #23, #31

A.3 Discussion of NRC SE Requirements

The following discussion describes how the documents listed above pertain to each of the NRC Safety Evaluation Requirements. All document references are denoted by the number between the brackets. EPRI Final Report 1007930 *On-Line Monitoring of Instrument Channel Performance Volume 3: Applications to Nuclear Power Plant Technical Specification Instrumentation* [11], the NRC Safety Evaluation of On-line Monitoring [23], and Dr. Uhrig's paper, *Regulatory Treatment of On-Line Surveillance and Diagnostic Systems* [31] contain either a discussion of or the actual NRC Safety Evaluation, and thus relate to all 14 of the Requirements.

Requirement 1:

The submittal for implementation of the on-line monitoring technique must confirm that the impact of the deficiencies inherent in the on-line monitoring technique (inaccuracy in process parameter estimate single-point monitoring and untraceability of accuracy to standards) on plant safety be insignificant, and that all uncertainties associated with the process parameter estimate have been quantitatively bounded and accounted for either in the on-line monitoring acceptance criteria or in the applicable set point and uncertainty calculations.

Uncertainty Discussion:

Much research has been conducted on quantifying the uncertainty associated with the process parameter estimate. For a reference on uncertainty in general, Dieck's *Measurement Uncertainty: Methods and Applications* [5] provides an excellent foundation of the theory behind measurement uncertainties and uncertainty intervals. The standard, ISA–RP67.04.02–2000 [20], also gives an excellent explanation of channel uncertainty and statistical analysis.

However, most of the uncertainty analyses for on-line monitoring are particular to the plant's chosen modeling technique. EPRI has chosen MSET as its preferred modeling technique. An overview of MSET, without a discussion of uncertainty, is provided in EPRI Final Report 1003361 [9], EPRI Final Report 1003579 [10], and EPRI TR-104965 [15].

Argonne National Laboratory has performed plant specific uncertainty analysis on the MSET technique. This analysis is discussed in Zavaljevski papers ([32], [33]), with the entire Argonne uncertainty analysis provided in Appendix E of EPRI Final Report 1007930 [11].

Argonne's uncertainty analysis uses wavelet de-noising to pre-process the data. There are many underlying assumptions associated with this filtering technique. The primary assumptions are that the instrument noise is white and normally distributed. Miron's PhD dissertation and related publication ([21], [22]) present the theory of the wavelet de-noising and explain the technique's inherent assumptions.

Researchers at the University of Tennessee recognized the similarity of function between wavelet de-noising and Independent Component Analysis (ICA). Like wavelet-denoising, ICA is capable of removing the instrument noise to obtain a noise free parameter estimate. However, unlike

wavelet de-noising, ICA relies on the redundancy of the sensors, as it transforms a set of mixed sources to their original independent sources. The book fittingly entitled *Independent Component Analysis* [18] offers a detailed introduction to ICA. Ding's PhD dissertation [7] and related paper [6], focus on Independent Component Analysis specifically for on-line sensor calibration validation. University of Tennessee researchers are currently investigating both wavelet de-noising and ICA. They plan to present a full comparison of the two techniques in the near future.

There are many other viable on-line monitoring models in addition to MSET. The redundant techniques are of special interest. The simplicity of the redundant techniques and the relative tractability of their uncertainty calculations could make them more readily acceptable to regulatory bodies than the more complex non-redundant techniques. Common redundant techniques include Parity Space methods, the Instrumentation and Calibration Monitoring Program (ICMP), Principal Component based techniques, Fuzzy logic methods, and the Redundant Sensor Estimation Technique (RSET). EPRI Final Report 1003579 [10], Chapter 2 of Ding's dissertation [7], the appendix of the paper *Redundant Sensor Calibration Monitoring and Reduction System Project* [6], and NUREG/CR-6343 [27] give a brief overview of all these techniques.

The theory and the results of the ICMP algorithm are discussed more in depth in EPRI TR-103435-V1 [13], and EPRI TR-104965 [15]. The uncertainty of the algorithm is presented in EPRI WO3785-02 [16], Appendix D of EPRI Final Report 1007930 [11], and in the paper *Monte Carlo Analysis and Evaluation of the Instrumentation and Calibration Monitoring Program* [29]. An Uncertainty Analysis has also been performed on the RSET technique. The paper, *Redundant Sensor Calibration Monitoring and Reduction System Project* [6], details this analysis.

The uncertainty analyses for RSET and ICMP were both conducted using a Monte Carlo Technique. Monte Carlo analysis is a scheduled risk assessment technique that performs a project simulation many times in order to calculate a distribution of likely results. A very common Monte Carlo technique is the bootstrap technique. Efron and Tibshirani's *An Introduction to the Bootstrap* [8] provides a complete reference on the topic. Ding's PhD dissertation [7] and Rasmussen's PhD dissertation [30] both illustrate the bootstrap method's ability to construct quantitatively bounded prediction intervals for various modeling techniques. The journal articles *Confidence Estimation Methods for Neural Networks: A Practical Comparison* [28] and *Practical Confidence and Prediction Intervals* [17] are additional references on the bootstrap method. Although primarily focusing on neural networks, (which are generally excluded from consideration for on-line monitoring applications), these publications offer an excellent discussion of uncertainty and also compare the bootstrap uncertainty estimation to uncertainties computed from analytical methods.

In summary, MSET, ICMP, and RSET are the only modeling techniques that have undergone a full Monte Carlo-based uncertainty analysis. However, it is anticipated that those analyses

combined with the additional references discussed above will supply the theoretical framework from which the uncertainty analyses for any remaining model can be performed.

Single Point Monitoring Discussion:
The single point monitoring issue concerns the probability that although the sensor appears to be in calibration at the operating point it may be out of calibration at another point in the process span. Since nuclear plants operate at nearly full power for the entire fuel cycle, resulting in few variations of the process parameter, this issue becomes very relevant in determining the ability of on-line monitoring to detect drift. EPRI conducted a large drift study using historical data from over 6,000 calibrations to look at the type of drift occurring. The results from this study proved that on-line monitoring was still valid even when the process is operating at a single point. However, to encompass the added uncertainty when the plant is operating with very little process change, a single-point monitoring penalty must be included with the other uncertainty terms in the drift allowance calculation. This approach will not influence the trip setpoint or the allowable value in the Technical Specifications. EPRI TR-104965 [15] presents a thorough discussion of the EPRI drift study and single point monitoring. A condensed version of this discussion is found in EPRI Final Report 1007930 [11].

Traceability of Accuracy to Standards Discussion:
As described in EPRI TR-104965 [15], on-line monitoring looks only to extend the calibration interval and not to eliminate calibrations altogether. Since a minimum of one redundant sensor is calibrated at each fuel outage, traceability of accuracy to reference standards still exists.

Requirement 2:
Unless licensees can demonstrate otherwise, instrument channels monitoring processes that are always at the low or high end of an instrument's calibrated span during normal plant operation be excluded from on-line monitoring programs.

Instrument channels that monitor unstable systems, such as auxiliary feedwater flow and safety injection, should be excluded from on-line monitoring. Also excluded are instrument channels, such as containment pressure, that monitor systems that operate at the low end or high end of the operating range. EPRI Final Report 1007930 [11] lists typical Technical Specification instrument channels that are both suitable and unsuitable for on-line monitoring. The documents discuss the basis EPRI used for making these determinations.

Requirement 3:
The algorithm used for on-line monitoring be able to distinguish between the process variable drift (actual process going up or down) and the instrument drift and to compensate for uncertainties introduced by unstable processes, sensor locations, non-simultaneous measurements, and noisy signals. If the implemented algorithm and/or its associated software cannot meet these requirements, administrative controls, including the guidelines in Section 3 of the topical report for avoiding a penalty for non-simultaneous measurements could be implemented as an acceptable means to ensure that these requirements are met satisfactorily.

All of the algorithms currently being considered for on-line monitoring were designed with the intent that they distinguish between the process variable drift and the instrument drift. MSET, specifically, uses the correlation of the instrument channels to differentiate the instrument drift from process changes. MSET is not susceptible to common mode drift because the correlation values for process drifts will be different than those for multiple instrument drifts. EPRI Final Report 1007930 [11] briefly discusses how MSET meets this requirement. However, EPRI Final Report 1003361 [9] is probably the best reference on the application of MSET.

The redundant algorithms rely on the instrument's redundancy to distinguish between process changes and instrument drift. For the redundant techniques, multiple instrument channels are measuring the same value. Thus, the techniques assume that the a process drift will result in changes in more than one instrument channel, whereas an instrument drift will occur in a single channel without corresponding changes in the remaining redundant channels. While common mode drift may occur, the probability of this is slight and decreases further when there are more redundant channels. In fact, EPRI TR-103435-V2 [14] presents a failure mode and effects analysis for typical sensors that establishes the absence of common-mode bias effects beyond those already included in the setpoint analysis.

Overall, the redundant algorithms are more affected by spillover than the non-redundant algorithms. An exception to this is the RSET algorithm, which uses an Independent Component Analysis algorithm for channel drift detection. The ICA algorithm isolates the actual parameter estimate from the channel error and common noise contained within the measured value. The paper, *Redundant Sensor Calibration Monitoring and Reduction System Project* [6], uses both simulated and real plant data to show the drift detection ability of both RSET and ICMP. The report also provides the theory behind many additional redundant algorithms that could be suitable for on-line monitoring. However, these additional algorithms are not applied to data.

Requirement 4:
For instruments that were not included in the EPRI drift study, the value of the allowance or penalty to compensate for single-point monitoring must be determined by using the instrument's historical calibration data and by analyzing the instrument performance over its range for all modes of operation, including startup, shutdown, and plant trips. If the required data for such a determination is not available, an evaluation demonstrating that the instrument's relevant performance specifications are as good as or better than those of a similar instrument included in the EPRI drift study, will permit a licensee to use the generic penalties for single point monitoring given in EPRI topical report 104965.

Most plants that implement on-line monitoring should be able to use the generic penalties for single-point monitoring given in EPRI TR-104965 [15]. These penalties were conservatively calculated using data from over 6,000 calibrations. The EPRI drift study explains why these penalties are overly conservative for most applications. Thus, if the plant chooses not to use them, or the penalties do not apply, EPRI TR-104965 [15] and EPRI Final Report 1007930 [11] present the method for calculating a single-point monitoring allowance using plant specific data.

Requirement 5:
Calculations for the acceptance criteria defining the proposed three zones of deviation ("acceptance," "needs calibration." and "inoperable") should be done in a manner consistent with the plant-specific safety-related instrumentation setpoint methodology so that using on-line monitoring technique to monitor instrument performance and extend its calibration interval will not invalidate the setpoint calculation assumptions and the safety analysis assumptions. If new or different uncertainties should require the recalculation of instrument trip setpoints, it should be demonstrated that relevant safety analyses are unaffected. The licensee should have a documented methodology for calculating acceptance criteria that are compatible with the practice described in Regulatory Guide 1.105 and the methodology described acceptable industry standards for trip set point and uncertainty calculations.

The standards ANSI/ISA–67.04.01 [1], ANSI/ISA-67.06.01 [2], and ISA–RP67.04.02–2000 [20], combined with the Regulatory Guide 1.105 [24] establish the theory and methods of setpoint calculations. These documents explain the complicated hierarchy between trip setpoint, allowable value, analytical limit, and safety limit. They clearly describe how the channel uncertainty is used in the establishment of the trip setpoint and the allowable value. ISA–RP67.04.02–2000 [20] even offers a step-by-step guide for establishing the acceptance criteria for a given instrument signal. The standards list three methods that are acceptable for setpoint calculations. However, recent discussions between NRC and NEI raised concerns about which method should be allowed. Because of the uncertainty about the outcomes of these discussions, this requirement should be given additional consideration. A concern could be that if a plant changes the method it uses to compute a setpoint, and the setpoint changes, the OLM allowances will also change. A procedure needs to be in place to make sure that these items are always consistent.

The OLM allowance and uncertainties do not effect the setpoint calculations; however, the setpoint calculations do effect the OLM allowances. The uncertainties unique to on-line monitoring, such as the process parameter estimate uncertainty and single point monitoring uncertainty, reduce only the on-line monitoring drift allowance. EPRI Final Report 1007930 [11] provides the methodology of the drift allowance calculations. This methodology ensures that the Technical Specification trip setpoint and allowable value requirements do not require revision.

Requirement 6:
For any algorithm used, the maximum acceptable value of deviation (MAVD) shall be such that accepting the deviation in the monitored value anywhere in the zone between parameter estimate (PE) and MAVD will provide high confidence (level of 95%/95%) that drift in the sensor-transmitter and/or any part of an instrument channel that is common to the instrument channel and the on-line monitoring loop is less than or equal to the value used in the setpoint calculations for that instrument.

EPRI Final Report 1007930 [11] explains the basis for the calculations that ensure that MAVD provides a high confidence level. These calculations conform to all setpoint calculations standards. However, as pointed out in Requirement 5, there is still the concern that if the setpoint calculation methodology changes and the OLM allowances are not recalculated in accordance with this new methodology, the trip setpoint could be violated.

EPRI TR-103436-V1 [13] explains in greater detail how the allowance for drift is conservatively determined. This method for determining the drift allowing has been used historically and satisfies all NRC regulations. However, on-line monitoring introduces unique uncertainties, such as the process parameter estimate uncertainty and single point monitoring uncertainty that further reduce this drift allowance. For a description of how these unique uncertainties are conservatively determined, the reader is referred to the Uncertainty Discussion and Single Point Monitoring Discussion found in Requirement 1.

Requirement 7:
The instrument shall meet all requirements of the above requirement 6 for the acceptable band or acceptable region.

EPRI Final Report 1007930 [11] explains the basis for calculations that ensure that Requirement 6 is met for the acceptable band or region. These calculations conform to all setpoint calculations standards. However, as mentioned in the previous two requirements, the plant must ensure that the methods used in calculating the setpoint and the OLM allowances are consistent. EPRI TR-103436-V1 [13] explains in greater detail how the allowance for drift is conservatively determined. This method for determining the drift allowance has been used historically and satisfies all NRC regulations. However, on-line monitoring introduces unique uncertainties, such as the process parameter estimate uncertainty and single point monitoring uncertainty that further reduce this drift allowance. For a description of how these unique uncertainties are conservatively determined, the reader is referred to the Uncertainty Discussion and Single Point Monitoring Discussion found in Requirement 1.

Requirement 8:
For any algorithm used, the maximum value of the channel deviation beyond which the instrument is declared "inoperable" shall be listed in the technical specifications with a note indicating that this value is to be used for determining the channel operability only when the channel's performance is being monitored using an on-line monitoring technique. It could be called "allowable deviation value for on-line monitoring" (ADVOLM) or whatever name the licensee chooses. The ADVOLM shall be established by the instrument uncertainty analysis. The value of the ADVOLM shall be such to ensure:

a. that when the deviation between the monitored value and its PE is less than or equal to the ADVOLM limit, the channel will meet the requirements of the current technical specifications and the assumptions of the setpoint calculations and safety analyses are satisfied; and

b. that until the instrument channel is recalibrated (at most until the next refueling outage), actual drift in the sensor-transmitter and/or any part of an instrument channel that is common to the instrument channel and the on-line monitoring loop will be less than or equal to the value used in the setpoint calculations and other limits defined in 10-CFR50.36 as applicable to the plant-specific design for the monitored process variable are satisfied.

This Requirement refers to the regulation 10-CFR50.36 *Domestic Licensing of Production And Utilization Facilities: Technical Specifications* [3]. The regulation defines the safety limits and limiting safety system settings that must be included in a plant's Technical Specifications.

EPRI Final Report 1007930 [11] explains the basis for the calculations that conservatively calculates the ADVOLM limit using the channel uncertainty. (Thorough explanations of total channel uncertainty can be found in ISA-RP67.04.02-2000 [20] and EPRI TR-103436V1 [13]). EPRI asserts that this calculation method does not affect the Technical Specification setpoint calculation allowances.

EPRI Final Report 1007930 [11] also argues that the on-line monitoring acceptable criteria, including the MAVD and the ADVOLM, be included in a quarterly surveillance procedure, and not in the Technical Specifications. EPRI TR-104695 [15] outlines the prescribed quarterly surveillance tests that accompany the implementation of on-line monitoring. ANSI/ISA-67.06.01 [2] and NUREG/CR-5903 [26] give a more detailed description of how surveillance tests are performed.

Requirement 9:
Calculations defining alarm setpoint (if any), acceptable band, the band identifying the monitored instrument as needing to be calibrated earlier than its next scheduled calibration, the maximum value of deviation beyond which the instrument is declared "inoperable," and the criteria for determining the monitored channel to be an "outlier," shall be performed to ensure that all safety analysis assumptions and assumptions of the associated setpoint calculation are satisfied and the calculated limits for the monitored process variables specified by 10 CFR 50.36 are not violated.

This Requirement refers to the regulation 10-CFR50.36 [3]. The regulation defines the safety limits and limiting safety system settings that must be included in a plant's Technical Specifications. EPRI TR-104965 [15] helps to clarify the terminology used in this requirement, as it explains the possible operating points of an on-line monitoring channel. EPRI Final Report 1007930 [11] derives how the limits for these operating points are calculated. These calculations conform to all setpoint calculations standards and ensure that this Requirement is met.

Requirement 10:
The plant-specific submittal shall confirm that the proposed on-line monitoring system will be consistent with the plant's licensing basis, and that there continues to be a coordinated defense-in-depth against instrument failure.

EPRI Final Report 1007930 [11] and EPRI TR-104695 [15] describe the establishment of online monitoring acceptance criteria that remain within the existing setpoint calculations allowances for drift, calibration, and other effects. This method for establishing acceptance criteria does not alter the current Technical Specification trip setpoint or allowable values. Thus, it should be straightforward for the plant-specific submittal to confirm that the on-line monitoring system is consistent with the plant's licensing basis. The three EPRI documents mentioned above also include a summary of the items that should be addressed in the plantspecific submittal.

EPRI Final Report 1007930 [11], EPRI TR-104695 [15], and IAEA-TECDOC-2600-29598 [19] all assert that on-line monitoring guarantees a continued defense-in-depth against instrument failure by its frequent evaluation of instrument performance. Unlike the traditional calibration method, which only evaluates instrument performance at each fuel outage, plants employing on-line monitoring technologies are required to perform calibration monitoring quarterly. However, these plants may elect to perform their calibration monitoring at even more frequent intervals.

Requirement 11:
Adequate isolation and independence, as required by Regulatory Guide 1.75, GDC 21, GDC 22, IEEE Std 279 or IEEE Std 603, and IEEE Std. 384 shall be maintained between the online monitoring devices and class 1-E instruments being monitored.

This Requirement refers to Regulatory Guide 1.75 [25]. This regulatory guide provides a method acceptable to the NRC staff for complying with regulations related to the physical independence of circuits and electric equipment that are associated with safety-related functions. Both EPRI TR-104695 [15] and NUREG/CR-5903 [26] discuss and diagram the on-line monitoring system's position relative to the rest of the instrument channel. These diagrams show that the on-line monitoring equipment boundary begins at the output of an isolator. This setup ensures that the isolation and independence between the on-line monitoring devices and class 1-E instruments meet all NRC Regulations. EPRI Final Report 1007930 [11] discusses this fact and also explains that their described MSET method does not connect to a physical instrument loop.

Requirement 12:
(a) QA requirements as delineated in 10 CFR Part 50, Appendix B, shall be applicable to all engineering and design activities related to on-line monitoring, including design and implementation of the on line system, calculations for determining process parameter estimates, all three zones of acceptance criteria (including the value of the ADVOLM), evaluation and trending of on-line monitoring results, activities (including drift assessments) for relaxing the current TS-required instrument calibration frequency from "once per refueling cycle" to "once per a maximum period of 8 years," and drift assessments for calculating the allowance or penalty required to compensate for single-point monitoring.
(b) The plant-specific QA requirements shall be applicable to the selected on-line monitoring methodology, its algorithm, and the associated software. In addition, software shall be verified

and validated and meet all quality requirements in accordance with NRC guidance and acceptable industry standards.

This Requirement refers to Appendix B, *Domestic Licensing of Production And Utilization Facilities: Quality Assurance Criteria for Nuclear Power Plants and Fuel Reprocessing Plants* of 10 CFR Part 50 [4]. This appendix establishes quality assurance requirements for the design, construction, and operation of structures, systems, and components that help to prevent or lessen the severity of postulated plant accidents. EPRI Final Report 1007930 [11] surmises that the plants should be able to meet part A of this Requirement by following the applicable plant-specific quality assurance procedures when performing an engineering analysis in support of on-line monitoring implementation.

EPRI Final Report 1007930 [11] provides documentation of the verification and validation (V&V) program that was followed to assure the quality of the SureSense software. Argonne National Laboratory (ANL) Reactor Analysis and Engineering Division completed the software quality assurance documentation in support of the MSET algorithm base code in 2002, and EPRI sponsored an independent V&V of the SureSense software Version 1.4 which was also completed in 2002. ANL produced a suite of 8 documents that are listed in reference 11 and the EPRI sponsored review is included as Appendix C. "Independent" is used to state that the review was performed by personnel not involved with the software development. Additionally, Expert Microsystem, the developer of SureSense, also has its own internal quality assurance program that includes documentation related to requirements, design, testing, and configuration management.

The V&V methodologies follow industry guidelines. For example, the independent V&V follows the guidance documents produced for the nuclear industry by the Nuclear Utilities Software Management Group (NUSMG). It should be known that the current version of SureSense no longer uses the MSET base code; thus the V&V activities performed by ANL may not be supportive of the current software and the new algorithm (ESEE) would need documentation showing the same degree of quality assurance.

In addition to SureSense, there are several other software applications suitable for on-line monitoring. EPRI Final Report 1003579 [10] describes three additional software product; the HRP Prox, the ICMP product, and the Instrument Performance Analysis Software System (IPASS) that are currently available for on-line monitoring applications. These software products are not known to have undergone the prescribed V&V testing and documentation.

Requirement 13:
All equipment (except software) used for collection, electronic transmission, and analysis of plant data for on-line monitoring purposes shall meet the requirements of 10 CFR Part 50, Appendix B, Criterion XII, "Control of Measuring and Test Equipment." Administrative procedures shall be in place to maintain configuration control of the on-line monitoring software and algorithm.

10 CFR Part 50, Appendix B [4], Criterion XII states that "Measures shall be established to assure that tools, gages, instruments, and other measuring and testing devices used in activities affecting quality are properly controlled, calibrated, and adjusted at specified periods to maintain accuracy within necessary limits." As shown in EPRI TR-104695 [15] and NUREG/CR-5903 [26], the on-line monitoring equipment is merely an isolated data collection system. The data for this on-line monitoring system is acquired completely from existing channels without altering any instrument circuits. These instrument circuits already should meet all NRC regulations, including the control of measuring and test equipment. EPRI Final Report 1007930 [11] further clarifies how on-line monitoring meets this Requirement. They also describe the plant procedures and surveillance requirements associated with on-line monitoring that maintain configuration control of the on-line monitoring software and algorithm.

Requirement 14:
Before declaring the on-line monitoring system operable for the first time, and just before each performance of the scheduled surveillance using an on-line monitoring technique, a full-features functional test, using simulated input signals of known and traceable accuracy, should be conducted to verify that the algorithm and its software perform all required functions within acceptable limits of accuracy. All applicable features shall be tested.

EPRI Final Report 1007930 [11] provides the actual V&V documentation produced in support of the EPRI on-line monitoring implementation project (which uses MSET). A procedure for an acceptance test and periodic test are included in this documentation. Although this procedure is designed specifically for the SureSense software, it is still a very useful reference to plants using other on-line monitoring techniques. The report also discusses the full-features functional test, and even describe its recommended input.

A.4 Summary of Relevant Literature

1. ***ANSI/ISA-67.04.01 - Setpoints for Nuclear Safety-Related Instrumentation (2000)***
   This ISA standard discusses the establishment of setpoints. It explains the complicated hierarchy between trip setpoint, allowable value, analytical limit, and safety limit. The standard serves as a supplement to ISA-S67.04.02. It discusses the selection and calculation of the safety limits in very general terms. It lists the possible sources of uncertainty that should be considered when determining the allowance between the analytical limit and the trip setpoint. However, it does not give detailed information on determination of these uncertainties or provide any sample calculations. It briefly explains the algebraic method and square root sum of squares method, which are both considered acceptable methods for combining uncertainties. The standard describes the documentation required for the uncertainty calculations.

2. ***ANSI/ISA-67.06.01 - Performance Monitoring for Nuclear Safety-Related Instrument Channels in Nuclear Power Plants (2002)***
   This ISA standard was written to give the nuclear industry guidance on the performance monitoring of safety related instruments. Current methods of verifying an instrument's performance include routine calibrations, channel checks, functional tests, and response time tests. The standard discusses the validation required for each of these test methods and the corresponding documentation. Although the body of the standard just gives a brief overview of the definitions and requirements of performance testing, the annexes provide very detailed descriptions on how each performance test is executed. The document is concerned with both pressure and temperature sensing devices, and is useful in pointing out the differences between their related performance tests. It is interesting that cross calibration is considered a valid technique for monitoring redundant RTDs but is not considered an acceptable means of monitoring pressure sensors. One of the standard's annexes does discuss on-line monitoring. It addresses the process estimation uncertainty that must be quantified before on-line monitoring will be considered an acceptable technique. Probably the most useful aspect of the standard's on-line monitoring discussion is its step-by-step guide for establishing the acceptance criteria for a given instrument signal. A brief summary of the different process estimate techniques that have been applied to on-line monitoring is also included.

3. ***Code of Federal Regulations, Title 10, Energy, Part 50.36- Domestic Licensing of Production And Utilization Facilities: Technical Specifications (1996)***
   This regulation mandates that all license applications include technical specifications that contain the following items: safety limits, limiting safety system settings, limiting control settings, the limiting conditions for operation, surveillance requirements, design features, and administrative controls. The regulation defines what is meant by each of these terms. The regulation also describes the proper procedure for the submittal and amendment of the Technical Specifications.

4. ***Code of Federal Regulations, Title 10, Energy, Part 50, Appendix B - Domestic Licensing of Production And Utilization Facilities: Quality Assurance Criteria for Nuclear Power Plants and Fuel Reprocessing Plants (1975)***
The appendix outlines the quality assurance program that is acceptable to the NRC staff. This QA program must be fully documented and the plant must operate according to the criteria set forth in the documentation. The regulation defines the controlled conditions that must be used when activities affecting quality are performed. The regulation also explains the special controls, processes, test equipment, tools, and skills needed to attain the required quality, and the verification that must accompany these quality components.

5. ***Dieck, Ronald H. - Measurement Uncertainty: Methods and Applications (2002)***
A critical issue for the nuclear industry's acceptance of on-line monitoring is the uncertainty associated with the parameter estimates. Since uncertainty presents such a large concern for the implementation of on-line monitoring, this textbook provides an understanding of how to calculate measurement uncertainties and uncertainty intervals. The problems and examples included in this book illustrate the fundamentals of measurement uncertainty analysis. The book explains how to categorize the error sources as either random or systematic. It provides detailed equations for uncertainty propagations. It also presents several data validation and analysis methods. Overall, reading the text affords an excellent background on uncertainty analysis. The book contains many useful sections that directly apply to the on-line monitoring uncertainty estimations.

6. ***Ding, Jun, Brandon Rasmussen, and J. Wesley Hines - Redundant Sensor Calibration Monitoring and Reduction System Project (2003)***
This report chronicles the EPRI funded research conducted at the University of Tennessee to investigate techniques for redundant sensor calibration monitoring and extension. This research led to the development of the Redundant Sensor Estimation Technique (RSET). RSET uses an Independent Component Analysis algorithm for channel drift detection. The ICA algorithm isolates the actual parameter estimate from the channel error and common noise contained within the measured value. Thus, RSET is capable of monitoring systems with only two redundant channels, a clear advantage over other on-line monitoring techniques. The ICA algorithm also employs a "selection rule." This rule uses correlation coefficients to assign less weight to the higher variance channels, meaning that they have less impact on the process estimate. This selection rule makes the ICA model well suited for both drift detection and variance reduction. The paper offers a comparison of RSET to ICMP. The comparison shows that RSET is not affected by spillover as is ICMP, and that RSET, in general, is a more robust technique. Bootstrapping was used to perform a sensitivity test on the RSET method. The results of the bootstrapping experiment show little variability between the RSET predictions. However, at the time of the report's publication, the RSET model was still in its preliminary stages. More research on this technique needs to be completed, including finding solutions to counteract model instability, developing optimized fault detection techniques, such as SPRT, for post processing, and further automating the model. The appendixes of this report provide

excellent descriptions of other on-line monitoring methods; specifically parity space methods, ICMP, Principal Component based methods, and fuzzy logic methods. The section describing the ICMP technique presents methods for estimating parameter uncertainty and performing a Monte Carlo analysis of the ICMP algorithm.

7. ***Ding, J., Ph.D. Dissertation - Independent Component Analysis for Sensor Validation (2004)***
Jung Ding's dissertation describes the development, testing, and optimization of independent component analysis (ICA) for redundant sensor calibration validation. A significant finding in Ding's research is the ability of ICA to monitor systems with only two redundant channels. ICA is an unsupervised learning paradigm in which the observed data are expressed as a linear transformation of latent variables that are mutually independent. An inherent assumption in ICA is that the signal is stationary. Since no process signal is entirely stationary, Ding examines under what conditions the ICA based technique can be used. Ding shows that a linear rotation transform is able to convert a non-stationary problem to a stationary problem. However, Ding concludes that this technique is computationally intensive and would probably not be suited for on-line monitoring. Thus, Ding recommends using ICA in conjunction with a unity check algorithm. The unity check algorithm indicates failure of the ICA method when the ICA weights fail to sum up to one. When the unity check fails, the ICA prediction automatically degrades to a reliable simple average. Ding also developed a hybrid monitoring system by merging ICA technique and inferential sensing technique. This system is more robust to data anomalies and also produces lower variance residuals. The dissertation provides examples that illustrate the hybrid system's superior performance in comparison to other on-line monitoring techniques, including ICMP and Principal Component Analysis. Ding evaluated the uncertainties in the parameter prediction using bootstrap prediction intervals. The bootstrap method is a resampling procedure that uses computer simulation to make statistical inferences. For ICA, the bootstrap method is the only method to estimate the uncertainty, as no analytical methods exist. However, the dissertation includes a linear model example to show that the bootstrap method produces similar prediction interval estimates when compared to standard analytical methods. For future work, Ding recommends finding a more sensitive error detection method. Currently a control chart method is used. However, Ding asserts that SPRT might be more optimal. He cautions that the distribution assumption in SPRT would first need to be verified before SPRT could be applied to ICA.

8. ***Efron, B., and R.J. Tibshirani- An Introduction to the Bootstrap (1993)***
This book provides full coverage of the bootstrap method. This text, while a complete reference on the topic, is fairly nonmathematical in its treatment of the bootstrap in all its forms. As such, it is accessible to anyone interested in the topic and not just statisticians. The bulk of the book discusses issues unique to regression models, bootstrap estimates of bias, the jackknife, several forms of bootstrap confidence intervals, permutation tests, hypothesis testing, estimates of prediction error, and using the bootstrap to find an optimal smoothing parameter in nonparametric regression. The bootstrap method is a resampling

procedure that uses computer simulation to make statistical inferences. Bootstrapping works by drawing many independent bootstrap sample data sets from an original data set by resampling with replacement. For each bootstrap set, an estimate of a specific population parameter is calculated. From the collection of these estimates, a distribution for the parameter of interest is obtained. The book discusses the fact that the bootstrap method provides an adequate, if not better, estimation of the standard error of nonparametric model prediction in comparison to alternative asymptotic techniques. It offers many sample exercises and examples that reiterate this fact. This is of great importance to on-line monitoring because some models have no analytical method for determining uncertainty and a Monte Carlos analysis is the only alternative. Along with the bootstrap, the book presents several other similar Monte Carlo methods for assessing statistical accuracy.

9. ***EPRI Final Report 1003361 - On-Line Monitoring of Instrument Channel Performance Volume 1: Guidelines for Model Development and Implementation (2004)***
This EPRI document is the first report in a set of three. It familiarizes its reader with the basic concept of on-line monitoring. It presents definitions of the common terminology used in describing on-line monitoring. It also summarizes EPRI's on-line monitoring projects and activities. The majority of the document is devoted to explaining the tasks that must be completed in order to implement on-line monitoring. The report attempts to keep its terminology generic, so that its discussion could pertain to the implementation of the on-line monitoring method. However, many of the issues surrounding implementation discussed in the report were geared specifically toward the MSET model. The MSET focus is to be expected since the report was generated after the IMC Users Group selected MSET as the preferred on-line monitoring method. In fact, this report gives arguably the best overview of MSET out of all the EPRI documents. The report also provided overviews of many other online monitoring techniques, including ICMP, in its appendixes. The ICMP uncertainty calculation is given in a form different from the one found in most of the other literature. The validity of this uncertainty calculation in comparison to the others needs to be further explored. However, the true focus of the report is the implementation of on-line monitoring. The report's discussion of the decisions that have to be made when implementing an on-line monitoring system is what sets it apart from other documents. It presents a comparison between batch and on-line data acquisition systems, giving the limitations and advantages of each. It also describes the numerous choices that go into model development. The report examines the technical issues associated with signal selection, including the criteria for determining the model size. The report emphasizes the importance of having high data quality. It provides examples of ways that bad data could be generated and then proceeds to explain how to deal with each type of bad data. It also graphically depicts the negative effects of using bad data. The report gives a very in-depth explanation of model training. It states the criteria for selecting training data and also presents methods to evaluate the training data's adequacy once selected. It also explains how to evaluate the adequacy of the trained model. Additionally, fault detection that operated on model residuals is described and guidance is given on how to assess identified failures. In its transition from failure identification, the report addresses why models may

sometimes need to be retrained, providing several examples that illustrate the need for retraining after new operating states are encountered.

10. **EPRI Final Report 1003579 - On-Line Monitoring of Instrument Channel Performance Volume 2: Model Examples, Algorithm Descriptions, & Additional Results (2004)**
This EPRI report is the second in a volume of three. This report provides more information regarding the empirical modeling algorithms EPRI used for their on-line monitoring project. The report supplements the broad overview given in the first report of the series. The redundant algorithms detailed in the report include the Instrument Calibration and Monitoring Program (ICMP) and Parity Space Averaging (PSA). The non-redundant algorithms described were the Multivariate State Estimation Technique (MSET) and the Expert State Estimation Engine (ESEE). However, the ESEE description is very brief, possibly because it is owned and developed by Expert Microsystems and is not in the public domain. The Uncertainty Analysis for these algorithms is not included in this report, but rather is found in the third report of the series. The report does include an in depth summary of the software products that EPRI used in their project. The four software systems described are the ICMP product, the Instrument Performance Analysis Software System (IPASS), the SureSense Diagnostic Monitoring Studio, and the HRP Prox. The report also gives a very good review of model development. Numerous examples of nuclear plant's on-line monitoring models are presented. The examples include models of various PWR plants, as well as Boiling Water Reactor plants, with primary system models and secondary system models shown. The report demonstrates the procedure for model development and thoroughly discusses model maintenance, with examples of the maintenance process provided.

11. ***EPRI Final Report 1007930 - On-Line Monitoring of Instrument Channel Performance Volume 3: Applications to Nuclear Power Plant Technical Specification Instrumentation (2004)***
This EPRI report is the final report in a volume of three. This report presents an overview of how calibration intervals can be extended through the use of on-line monitoring. The report was written to supplement the technical information provided in TR-104965 (On-Line Monitoring of Instrument Channel Performance). This report, when used in conjunction with TR-104965, provides one of the most extensive discussions of on-line monitoring to date. The report responds to the 14 Requirements issued by the NRC. Each requirement is discussed in depth, with a clear explanation of how on-line monitoring already or can be modified to meet the requirement. In it's discussion of Requirement 2, the report gives an excellent outline of the types of Technical Specification instrument channels that are suitable for on-line monitoring. Like TR-104965, this report also addresses the single point monitoring issue. The results of the EPRI drift study are again highlighted and single point monitoring uncertainty allowances are outlined. Additionally, the report describes the recommended Technical Specification changes associated with the implementation of on-line monitoring. The document thoroughly addresses measurement

uncertainty and provides guidance regarding the on-line monitoring acceptance criteria. The plant-specific MSET uncertainty analysis that was completed by Argonne National Laboratory is included in the appendix. Although the report primarily focuses on this analysis, it still discusses the uncertainty of many redundant monitoring techniques. The report summarizes the procedures and surveillances that are affected by on-line monitoring. It also details the software verification and validation criteria for on-line monitoring. The report provides an example software acceptance test that can also be used for the quarterly periodic test specified in the NRC SE.

12. ***EPRI Final Report 1006777 - On-line Monitoring Cost Benefits Guide (2003)***
This EPRI final report presents detailed information about the cost benefits of applying online monitoring to nuclear instrument systems. This report used MSET as the basis for all of its estimates. The report outlines all of the benefits of implementing on-line monitoring, both financial and safety-related. It also notes the indirect benefits of performance monitoring and equipment predictive condition monitoring. The costs associated with on-line monitoring are thoroughly described. The costs are divided into two main categories: the initial costs that apply to program setup, and the recurring costs. Examples of the initial costs include personnel training expense, software license cost, NRC review fee, and the cost of having an expert perform an uncertainty analysis. The recurring costs include software upgrades and model review, and possibly model re-training with new operating data. Although economy of scale is expected for multi-unit sites, it was not considered in any of the cost estimates. The report concludes that for the majority of plants, the potential payback period based solely on calibration reduction is estimated to be between 5 to 10 years, or possibly never. However, this estimate takes into consideration only the time and materials in deriving the dollar amounts. In quantifying the return of investment, the indirect benefits such as reduced radiation exposure, improved safety, and increased instrument reliability are not considered. For instance, if the implementation of OLM was able to detect an instrument drift that would otherwise cause the plant to trip, the avoidance of this single event would more than pay for the implementation of OLM.

13. ***EPRI TR-103436-V1 - Instrument Calibration and Monitoring Program, Volume 1: Basis for the Method (1993)***
This EPRI report explains the Instrument Calibration and Monitoring Program (ICMP) methodology. It compares current calibration practices and ICMP, highlighting the strengths and weaknesses of each method. It also discusses the preliminary results of the ICMP prototype system that is installed at the V. C. Summer plant. The ICMP monitors nuclear plant channel data and verifies the instrument's performance. In ICMP, a weighted averaging algorithm is used to determine an estimate of the true process parameter. The ICMP algorithm contains a consistency value that denotes how much of the signal's measured value contributes to the process estimate. This value is based on the signal's consistency with the other redundant signals. Thus, inconsistent signals contribute less to the process estimate. Weights are also pre-assigned to each signal value. In other ICMP literature, the weights are assumed to be 1, meaning that all of the signals contribute

equally. However, in this study, weights were assigned a value of the inverse of the instrument's accuracy squared. This weight assignment allows the more accurate narrow range instruments to have more influence on the process estimate than comparable wide range instruments. Multiple consecutive miscomparison (MCM) was also used in the study to introduce a momentum into the ICMP fault detection process. MCM reduces false alarms by not excluding a signal from the process estimate until it remains inconsistent with the other signals for a time period beyond its normal noise swing. To perform the long-term drift analysis, the ICMP data is filtered with a moving average filter and the process estimate (from the ICMP algorithm) is compared to each measured signal value. If the drift is within the acceptance criteria, the channel does not require calibration. In order to determine the acceptance criteria, a combination of the channel's error components must be found. This combination of components is called the channel statistical allowance (CSA). ICMP uses a modified CSA equation because the drift component becomes independent of the sensor calibration accuracy, and sensor measurement and test equipment error with online monitoring. Although the uncertainty associated with estimation of the process parameter in the ICMP algorithm must be included in the CSA, the report does not address how to quantify this value. ICMP also performs short-term data analysis, which can be used to verify an instrument's calibration during transients or to troubleshoot problems with an instrument channel. The report presents on-line monitoring with the ICMP system as a very efficient method of verifying an instrument's zero setpoint, span, linearity, deadband, repeatability, and hysteresis. ICMP cannot detect response time degradation or common mode failure, but neither can traditional calibration techniques. In fact, the report identifies the main shortcoming of ICMP as the fact that it cannot verify the instrument's performance over its full span, as the data collected for ICMP is only at operating conditions. This issue is discussed in more detail in the second volume of this report.

14. ***EPRI TR-103436-V2 - Instrument Calibration and Monitoring Program, Volume 2: Failure Modes and Effects Analysis (1993)***
This EPRI document provides an assessment of sensor failure modes. The document presents the results from the failure mode and effects analysis (FMEA) the EPRI performed for typical sensors. Of particular significance to on-line monitoring is its examination of what happens to the sensor output signal when the sensor fails. Since on-line monitoring can detect sensor failures that cause a shift in the sensor's output signal, the types of failures of concern are those failures which cause no significant change in the output signal. This document reports that this type of failure is only likely to occur when the process is at or near the low end of its operating range and the sensor fails in a negative direction, toward the low end of the span. The FMEA shows an absence of common mode sensor bias. This result is especially noteworthy, as it means that there should be no additional penalties for commonmode sensor bias effects, beyond those already included in the setpoint analysis.

15. ***EPRI TR-104965 - On-Line Monitoring of Instrument Channel Performance (2000)***
This EPRI report is one of the most relevant documents to this research. The report proposes to relax the frequency of instrument calibrations required by the Technical

Specifications (TS) from once every fuel cycle to once in a maximum of eight years. This proposal is based on the experiences that several groups have had with trial on-line monitoring programs. The report describes the experiences that EPRI, the Candu Owner's Group, Electricite de France, and B&W Owner's Group have already had with their trial implementations. Because the plants used different on-line monitoring techniques, this description is very useful, as it provides for a comparison of the limitations and advantages of the various methods. However, the report primarily focuses on MSET and ICMP as process estimate techniques. This focus is warranted, as these are the two most widely employed process estimate techniques. Plants that chose MSET have had an overwhelmingly favorable experience. MSET's combination with the Sequential Probability Ratio Test (SPRT) sets them apart from other pattern recognition techniques. The results from the Crystal River plant established that MSET/SPRT software performed much better than other on-line software. This advantage is mainly attributed to the optimization of the SPRT acceptance criteria, which ensured that the system had an appropriate sensitivity level. This is important because an overly sensitive system results in false alarms and non-sensitive systems can cause missed alarms. Although MSET was proven to be a robust on-line monitoring system, ICMP was not discredited. In fact, ICMP has clear advantages over pattern recognition techniques in that it is much simpler and creates no concern over whether the process is operating in the same region as the training data. The report gives an excellent description of the determination of ICMP's uncertainty and acceptance criteria. It even shows an example of acceptance criteria calculation. However, the report does not provide much detail on how to determine the proper numerical value for the criteria that flag an instrument for calibration at the next convenient period. The report simply states that best engineering judgment should be used when determining this value. The report does address the single point monitoring issue. It presents the condensed results of the EPRI drift study. This was the EPRI study that looked at the type of drift occurring to prove the validity of single point monitoring. The report stipulates that if single-point monitoring is occurring, then a single-point monitoring uncertainty term must be included with other uncertainty terms in calculating acceptance intervals. The report also includes a useful description of the types of instruments that should be excluded from on-line monitoring.

16. ***EPRI WO3785-02 - Monte Carlo Simulation and Uncertainty Analysis of the Instrument Calibration and Monitoring Program (1995)***

This document offers an excellent overview of the strengths and weaknesses of the ICMP algorithm. The report presents the results of a Monte Carlo analysis of the ICMP algorithm. Monte Carlo analysis is a scheduled risk assessment technique that performs a project simulation many times in order to calculate a distribution of likely results. In this case, the Monte Carlo analysis was performed over the ICMP algorithm with randomly generated numbers of the appropriate distribution. Since the ICMP algorithm yields an estimate of the true process value, the Monte Carlo uncertainty analysis gauged the uncertainty associated with this estimate. The report gives a review of the Monte Carlo method that explains indepth exactly how the technique works. The results of the analysis indicated that the ICMP response varies with user-defined inputs and the number of redundant sensors. These

results signify that the ICMP algorithm can be optimized with the user defined inputs. The report provides specific recommendations regarding the setup and use of the algorithm. The results also showed that the ICMP algorithm generally offered better performance as the number of redundant channels increased. The report also presents the results of the ICMP algorithm when used with actual plant data. On the whole, the actual plant data appeared to validate the Monte Carlo predictions.

17. ***Heskes, T., - Practical Confidence and Prediction Intervals (1999)***
Although geared toward neural networks, this article is still of importance to on-line monitoring, in respect to its study of the bootstrap procedure. The results in this paper support the fact that the bootstrap method provides an adequate, and often better, estimation of the standard error of nonparametric model prediction in comparison to alternative asymptotic techniques. The paper shows that the prediction intervals attained from the bootstrap are able to detect outliers and test patterns that lay outside the training space just as well as the conventional methods. The results also show that the bootstrap method performs well even in cases of limited data. These results are useful to on-line monitoring because for some of the modeling techniques the bootstrap method, or a similar Monte Carlo technique, is the only means for estimating the uncertainty. The only weak point in this paper is the fact that it assumes the bias term is negligible in its computation of the confidence intervals. However, it notes this deficiency and warns that the confidence intervals are too liberal because of it.

18. ***Hyvarinen, A., J. Karhunen, and E. Oja - Independent Component Analysis (2001)***
This book offers a comprehensive introduction into Independent Component Analysis. Independent Component Analysis (ICA) is a statistical and computational technique for revealing hidden factors that underlie sets of random variables, measurements, or signals. ICA can be used to identify original signals from a mixture of observed signals, which are a linear combination of sources, without prior knowledge of information about the mixing matrix. Although ICA is related to principal component analysis and factor analysis, it is a much more powerful than either of these techniques. ICA is capable of finding the underlying factors when these other methods fail completely. In on-line monitoring, ICA could be used to determine the true process signal from the independent noise sources in a group of redundant sensors. Knowing the true process signal would allow the bias portion of the uncertainty to be easily calculated for many of the on-line monitoring models including MSET and ICMP. This text presents a general overview of the basics of ICA. The overview includes a review of the fundamental mathematical principles needed to understand ICA. The book highlights its teachings with examples and practice problems taken from real-world applications. Later chapters examine the latest ICA applications in image processing, telecommunications, and audio signal processing.

19. ***IAEA-TECDOC-2600-29598 - On-Line Calibration Monitoring of Process Instruments in NPPs TecDoc (2004)***

This IAEA TECDOC provides a summary of on-line calibration monitoring developments. The document is in draft form, but a meeting to finalize it is scheduled for March 2005. The current content seems promising and once completed, it appears that the document will give a very clear overview of online sensor calibration monitoring. It highlights the key results from the current on-line monitoring research projects, presenting them in a manner that is easily understood. Its focus is on equipment condition monitoring and extension of calibration intervals of pressure, level, and flow transmitters. The TECDOC also includes reviews of regulatory positions on this subject and provides examples of implementation of on-line monitoring techniques in nuclear power plants. Furthermore, the in-situ methods for verifying the performance of process instrumentation are reviewed in this TECDOC.

20. ***ISA-RP67.04.02-2000 - Methodologies for the Determination of Setpoints for Nuclear Safety-Related Instrumentation (2000)***
This standard contains one of the most thorough explanations of the total channel uncertainty calculation. It presents detailed example uncertainty calculations and describes how to account for the propagation of uncertainties through functional modules and through multiple signals or non-linear channels. The standard encourages dialogue with the vendors over the interpretation of performance specifications or test results. The standard cites that it is the plant's responsibility to avoid improper use of the vendor performance data. It details the simple field tests that can give an indication of the random component of the vendor published value, if separation of components is desirable. The standard describes how the channel uncertainty is used in the establishment of the trip setpoint and the allowable value. Three methods for determining the trip setpoint are outlined. The standard explains that the uncertainty value associated with single-sided distributions is smaller than the value associated with double-sided distributions. It presents a method to calculate these smaller uncertainties for setpoints with a single side of interest. Although it never addresses on-line monitoring, this standard is still one of the most useful documents surveyed with its outstanding explanation of channel uncertainty and statistical analysis.

21. ***Miron, A., Ph.D. Dissertation - A Wavelet Approach for Development and Application of a Stochastic Parameter Simulation System (2001)***
Miron's Ph.D. dissertation describes the author's study of the use of wavelet-based decomposition techniques in finding the deterministic part of a reactor plant signal in place of using the RPSS Fourier approach. This study resulted in the development of a Stochastic Parameter Simulation System (SPSS) computer program. The SPSS is a program that uses wavelet theory, opposed to the traditional Fourier techniques, to approximate the deterministic component of a signal. The program is used to analyze steady state plant signals. It decomposes the signal into its deterministic and stochastic components, and then reconstructs a new, simulated signal that possesses exactly the same statistical noise characteristics as the actual signal. It is also used a filtering device. For filtering, it isolates the principal serially-correlated, deterministic components from the analyzed signal so that

the remaining stochastic signal can be analyzed with signal validation tools. Miron's dissertation explains the theory behind this program. To verify that the wavelet techniques employed in the SPSS can successfully replace the Fourier procedures used in the RPSS methodology, Miron analyzed three sets of steady-state signals with RPSS and SPSS and compared the results. The comparison showed that SPSS is superior to RPSS, as it provides a better estimation of the white and normally distributed residuals, and yields better reconstruction. Miron's dissertation also establishes that SPSS can be successfully used to enhance the reliability of the Multivariate Sensor Estimation Technique (MSET). The SPSS program eliminates the serial-correlation from MSET residuals. Miron found that this elimination resulted in more of the user-defined false alarm rates being met. However, this finding is from a very preliminary stage of the research. Miron cautions that much more work is needed before SPSS is fully integrated with MSET.

22. ***Miron A. and J. Christenson - The Stochastic Parameter Simulation System: a Waveletbased Methodology for Perfect Signal Reconstruction (2003)***
This paper is essentially a much-condensed version of Miron's dissertation, which is described below. Many of the same results are presented, as well as a very abbreviated explanation of the theory behind the conventional Reactor Parameter Signal Simulator (RPSS), and the newly developed Stochastic Parameter Simulation System (SPSS). The paper reports the results from a study where the RPSS and SPSS were used to analyze data from a nuclear plant operating at full power. The study showed that both systems provided good estimates for the analyzed signals. However, the SPSS preserved the degree of serialcorrelation of the original signal in the reconstructed signals better than RPSS. Overall, SPSS produced reconstructed signals were statistically closer to the original signal than the reconstructed signals produced by RPSS.

23. ***NRC Project No. 669 - Safety evaluation by the office of nuclear reactor regulation: Application of on-line performance monitoring to extend calibration intervals of instrument channel calibrations required by the technical specifications - EPRI Topical Report (TR) 104965 On-Line Monitoring of Instrument Channel Performance (2000)***
This document is the NRC safety evaluation report (SER) of EPRI's Topical Report (TR) 104965, *On-Line Monitoring of Instrument channel Performance*, dated November 1999. EPRI's topical report proposed to replace the current time-directed traditional calibration with the new and advantageous calibrate-as-required approach using on-line monitoring. The NRC's evaluation of TR-104965 is given in this SER. The SER requires that: (1) the proposed on-line monitoring technique can perform all the required designated functions better than, or as good as, the current traditional calibration, with the same or better reliability; or (2) if due to inherent deficiencies in the proposed technique, the proposed technique cannot be demonstrated to be either better than, or at least as good as, the current practice, then the justification should verify that the impact of the proposed technique on plant safety will be insignificant and the advantages of using it will outweigh the deficiencies. The SER also lists the 14 NRC-issued Requirements that on-line monitoring

systems must meet to gain regulatory approval. These Requirements are the major factor for OLM's implementation. A copy of this SE can be found in the appendix of EPRI Final Report 1007930.

24. ***NRC Regulatory Guide 1.105 - Setpoints for Safety-Related Instrumentation (1999)***
This regulatory guide cites the many setpoint discrepancies in the nuclear industry that have led to a number of operational problems. The guide states that many of these setpoint discrepancies were caused by errors in calibration procedures and a lack of understanding of the relationship of the setpoint to the allowable value. The guide also notes that plants do not typically verify whether setpoint calculation drift assumptions have remained valid for the system surveillance interval. To resolve these setpoint discrepancies, the guide directs the plants to conform to ANSI/ISA-67.04.01, Setpoints for Nuclear Safety-Related Instrumentation. The guide lists the few clarifications and exceptions to the standard. The only notable exception listed is that the standard states that the limiting safety system setting (LSSS) may be maintained in technical specifications or appropriate plant procedures. However, the LSSS actually must be specified as a technical-specification-defined limit in order to satisfy the requirements of 10 CFR 50.36, and cannot be maintained in the plant procedure. The guide gives a guarantee that conforming to this standard, with the few listed exceptions, ensures that the plant's method for establishing and maintaining setpoints for safety-related instrumentation within the technical specification limits is acceptable to the NRC staff and satisfies the NRC's regulations.

25. **NRC Regulatory Guide 1.75-Physical Independence of Electric Systems (1978)**
This regulatory guide provides a method acceptable to the NRC staff for complying with regulations related to the physical independence of circuits and electric equipment that perform safety-related functions. Overall, the guide endorses compliance with IEEE Std 384-1974 to meet these regulations. (IEEE Std 384-1974 dictates the criteria for the separation of circuits and equipment that are redundant.) The regulatory guide lists the NRC's exceptions and clarifications of this standard. There are no major NRC exceptions to this standard. Rather most of guide's discussion simply clarifies sections of the standard and gives the NRC's preferred method of carrying out these sections. For instance, the guide notes that the NRC's preferred method of marking cable is color coding.

26. ***NUREG/CR-5903 - Validation of Smart Sensor Technologies for Instrument Calibration Reduction in Power Plants (1993)***
This document was written after the completion of Phase I of the NRC sponsored study, while Phase II of the study was underway. It presents an overview of the study and what the study hopes to accomplish. It provides little information about the data analysis techniques being used to perform the on-line monitoring, simply stating that the data is being sent to AMS for analysis. Rather, the report focuses on the data acquisition system. The document describes in detail the data collection method. For the 170 signals being monitored at the McGuire Nuclear Station, a DC data point is collected once every 25 minutes for drift

monitoring analysis. Weekly, AC data points are collected from each of 110 channels being monitored for response time degradation. Although not explicitly mentioned, this lag time between data point collection indicates that filtering the McGuire data would be imprudent, as the process dynamics and not just the noise would be filtered. In describing the data acquisition system, the document places much emphasis on the sensor itself because smart sensors were used in the project. A full comparison between smart sensors and conventional sensors is made, with the smart sensor technology described. The document also reports on current safety-related instrumentation performance testing in the nuclear industry. It explains daily channel checks, surveillance tests, response time testing, and full-channel calibration. In addition to these performance tests, the document explains the cross-calibration process. However, as the document states, this process is only applicable to RTDs and not to pressure transmitters.

27. ***NUREG/CR-6343 - On-Line Testing of Calibration of Process Instrumentation Channels in Nuclear Power Plants (1995)***
This report summarizes the results of a three-year study contracted with the NRC to determine the validity of on-line monitoring. The study involved both laboratory and inplant validation tests, including the installation of a data acquisition system at the McGuire Nuclear Power Station. The study's results supported the feasibility of on-line monitoring for assessing an instrument's calibration while the plant is operating, and the report clearly states all of its benefits. Although the study ruled out physical modeling, it remained impartial to all other process estimation techniques. The report lists neural networks, parity space, simple and weighted averaging, empirical modeling, generalized consistency checking, sequential probability ratio tests, and process hypercube comparison as possible on-line monitoring techniques. The report presents a general summary of each of these techniques and the theory behind them. It does not give much information on the uncertainty associated with each technique. The study assumed that the process estimation uncertainties remained constant, meaning that drift detection was not affected by the uncertainty. However, the process estimation uncertainty does affect the determination of the allowable drift limit, a fact that is only briefly mentioned. The report does stress the importance of data qualification, regardless of which on-line monitoring technique is applied.

28. ***Papadopoulos, G, P.J. Edwards, and A.F. Murray - Confidence Estimation Methods for Neural Networks: A Practical Comparison (2000)***
Although geared toward neural networks, which are generally excluded from consideration for on-line monitoring applications, this article still has great significance in its discussion of uncertainty. The article explains that inaccuracies in the training data and inherent limitations of the model contribute to the uncertainty associated with all non-parametric techniques. The article clarifies and gives examples of the factors that comprise all the terms in the uncertainty calculation. The paper contains an in-depth discussion of standard error and fully illustrates the bootstrap procedure. It also gives an excellent description of the difference between prediction and confidence intervals. Furthermore, the paper presents

an innovative approach for estimating the bias. Historically, the bias has been estimated as a single value based on the oversimplification that the data noise and model bias is constant for all input data. However, nonparametric models often have a tendency to over-smooth sharp curvature, and in complex real-world problems data noise is known to vary over the different operating ranges. Thus, in this article, the bias was treated as a function of the inputs. To obtain a bias estimate for future predictions, an additional network was trained using the bootstrap residuals as targets. The results presented in the article show this technique to result in a more true and conservative estimate of the bias in comparison to the techniques where the bias is treated as a constant value.

29. ***Rasmussen, B., E. Davis, and J. Wesley Hines - Monte Carlo Analysis and Evaluation of the Instrumentation and Calibration Monitoring Program (2002)***
This paper examines the ICMP algorithm. It describes the workings of the algorithm and also provides insight into the method for determining the proper consistency check factor and acceptance criteria. The paper also presents the method for determining the parameter estimate uncertainty by using a Monte Carlo analysis. This parameter estimate uncertainty is needed to find the uncertainty of the ICMP algorithm's estimation. The paper gives the results of the Monte Carlo analysis performed on the ICMP algorithm. To verify these results and to evaluate the performance of the ICMP algorithm, three case studies were carried out, in which the ICMP algorithm was applied to actual nuclear plant data. The paper summarizes the conclusions that were drawn from these case studies. In the first case study, a signal with a greater mean value caused many false alarms. In order to prevent this, the consistency check factor and acceptance criteria had to be increased to the point that made the ICMP algorithm incapable of identifying all but the largest drifts. To remedy this, the paper recommends that mean-centering be used to get rid of any bias resulting from a channel with a mean value differing from the remaining redundant signals. The second case study produced results that were in agreement with the conclusions drawn from the Monte Carlo analysis. This case study illustrated the excellent performance of the ICMP algorithm when it is applied under conditions typical to most sets of redundant sensors (similar mean values, standard deviations, and high correlations). Like the second case study, the third case study also attested to the algorithm's satisfactory drift detection capabilities. However, the parameter estimate uncertainty was extremely high due to the large channel standard deviations. The paper recommends combating this problem by limiting the channels to full power operations, which would serve to eliminate these large standard deviations. Overall, this paper presents ICMP as a suitable technique for on-line monitoring, as long as it is properly applied.

30. **Rasmussen, B., Ph.D. Dissertation - Prediction Interval Estimation Techniques for Empirical Modeling Strategies and their Applications to Signal Validation Tasks (2003)**
Brandon Rasmussen's dissertation evaluated the suitability of three empirical modeling techniques for on-line monitoring signal validation. The three empirical modeling techniques were: artificial neural networks (ANN), neural network partial least squares

(NNPLS), and local polynomial regression (LPR). The dissertation details the theoretical foundations for each of these methods. It also discusses issues related to the implementation of the models. However, Rasmussen's work focuses on the evaluation of the associated uncertainty of the model estimations. Rasmussen derived an analytical estimate of the prediction interval for each modeling technique. He compared the analytical prediction intervals to results obtained from bootstrapping via Monte Carlo resampling, to validate their expected accuracy. Rasmussen's dissertation concentrates on prediction intervals, rather than confidence intervals, because prediction intervals provide the accuracy with which the desired response can be predicted, whereas confidence intervals provide only the accuracy of the model itself. Rasmussen's dissertation presents the results of a study that applied the three modeling paradigms to three different data sets: one simulated, and two data sets containing actual nuclear plant data. The study considered models of all different complexities (for ANN and NNPLS models this meant varying the size and for LPR models it meant varying the bandwidth). In addition to considering the resultant prediction intervals from the study, Rasmussen also evaluated the models based on their average estimation error and stability. The study using real nuclear plant data indicated that ANN models produced large uncertainty values when the training data exhibited collinearity. The study reaffirmed that the NNPLS model is ideal for a highly collinear set of predictors but not appropriate for nonlinear data. The results from the LPR models remained consistent for data with or without collinearity, assuming that proper regularization techniques were applied. The results also showed that as the complexity of the ANN or NNPLS model was increased, the prediction interval magnitudes decreased to a minimum value. Still, the dissertation concludes that the proposed methods can provide a supporting 95% significance to predictions of instrument channel drift. For future work, Rasmussen recommends many studies that will promote a better understanding of prediction intervals and also exploring methods to improve the prediction interval computation. These methods include using a Fisher Information approach to estimate the bias and to use a modified form of the prediction interval computation that is analogous to the form used for the nonlinear regression models.

31. ***Uhrig R. E. - Regulatory Treatment of On-Line Surveillance and Diagnostic Systems (2001)***

This paper summarizes the dialogue between the Electric Power Research Institute (EPRI) and the Nuclear Regulatory Commission (NRC) regarding On-Line Monitoring. The paper first examines EPRI's, *On-Line Monitoring of Instrument Channel Performance*, topical report, which was published after EPRI's initial request for the approval of on-line monitoring systems was rejected by the NRC. This rejection was mainly due to the large uncertainties surrounding the monitoring technique. The paper then relays the NRC's response to this topical report, as well as the NRC's initial concerns about On-Line Monitoring. These concerns include the facts that on-line monitoring is not capable of monitoring the full instrument range, does not provide traceability to NIST, and reduces the physical inspection of the instruments. EPRI and the Utilities issued a response to the NRC's concerns, refuting most of them. After this exchange, the NRC issued fourteen

requirements that on-line monitoring systems would have to meet. The paper lists these requirements. Requirements 1-9 present specific criteria that on-line monitoring must meet and are very significant to the on-line monitoring research currently being conducted. The last five requirements (10 through 14) focus on the existing quality standards that the plant must continue to meet in order to obtain on-line monitoring approval. These requirements say little about the actual on-line monitoring method. The paper ends on a positive note, with the list of the NRC's conclusions, all of which reflect a favorable attitude toward the implementation of on-line monitoring. However, there are many questions raised by these requirements that the paper does not discuss. Most of the questions pertain to the uncertainty analysis and the single point monitoring technique. For instance, does the NRC require dynamic uncertainty bands, or is a single number acceptable?

32. ***Zavaljevski, N., A. Miron, C. Yu, and T. Y. C. Wei - A Study Of On-Line Monitoring Uncertainty Based On Latin Hypercube Sampling And Wavelet De-Noising (2004)***
This document describes the methodology of the Argonne-developed MSET uncertainty analysis. The uncertainty analysis involves pre-processing the MSET data using wavelet denoising. Wavelet de-noising is a noise estimation procedure commonly used to reduce high frequency noise. The technique uses wavelet transform to estimate the noise scale at each wavelet level. The wavelet de-noising technique employed in this study was based on the Stochastic Parameter Implantation System (SPSS) methodology. It determines the "true" denoised signal by removing the largest uncorrelated component from each signal. The probability distribution for the remaining uncorrelated component is found and then simulated using the Latin Hypercube Sampling (LHS) procedure. The LHS is a stratified sampling technique in which the random variable distributions are divided into equal probability intervals. From the Latin Hypercube Sampling simulation data, the detection sensitivity and the spillover measure are evaluated. The LHS simulation data is stored in a database, along with the uncertainty measures for each simulation run. Database queries are then performed to provide conservative uncertainty estimates for the MSET model. However, these queries are model specific and cannot be applied to the general case. Still, the research is very promising. For the models studied, it was found that the number of training vectors had the most significant effect on uncertainty. If too few are chosen there is large systematic error, while too large a number of training vectors causes over fitting. This finding reiterates the importance of choosing training data that is representative of the entire data set or correctly regularizing the model.

33. ***Zavaljevski, N. - Uncertainty Analysis for the Multivariate State Estimation Technique (MSET) Based on Latin Hypercube Sampling and Wavelet De-Noising (2003)***
This paper describes the uncertainty analysis developed for the MSET algorithm by Argonne National Laboratory. The uncertainty of the MSET parameter estimate had to be quantified so that MSET could be employed by safety-critical and mission-critical applications, including on-line monitoring. The MSET parameter uncertainty estimate depends on the number of sensors in the model, the correlation between sensors, and the noise level. The uncertainly analysis that Argonne developed for MSET is based on Latin

Hypercube Squaring. The analysis is run by computer code. The code first removes the largest uncorrelated component from each signal in the model. This component is referred to as "the true signal noise." If this component is very small, then it is replaced by a noise component with a standard deviation corresponding to the sensor measurement and test equipment (SMTE) errors. This replacement ensures that the result will be conservative. Next the code performs a parametric uncertainty study by varying the memory matrix size. The model that performs well under all conditions is proposed as the actual model and its uncertainty is conveyed by a 95/95 confidence interval. The paper presented preliminary uncertainty results for MSET models of typical PWR plant sensor groups. For sensor groups containing only a small number of redundant sensors, the MSET uncertainty was small. For larger sensor groups, the MSET uncertainty was greater, due mainly to the considerable variation of the process flow. Although the uncertainty was high, the paper notes that it is still less than the predicted noise level. The paper suggests that pre-filtering the data could reduce the uncertainty, but cautions that care must be taken when filtering to ensure that the process dynamics are not lost.

NRC FORM 335
(9-2004)
NRCMD 3.7

U.S. NUCLEAR REGULATORY COMMISSION

BIBLIOGRAPHIC DATA SHEET

(See instructions on the reverse)

1. REPORT NUMBER
(Assigned by NRC, Add Vol., Supp., Rev., and Addendum Numbers, if any.)

NUREG/CR-6895

2. TITLE AND SUBTITLE

Technical Review of On-line Monitoring Techniques for Performance Assessment: Volume 1, State-of-the-Art

3. DATE REPORT PUBLISHED

MONTH	YEAR
January	2006

4. FIN OR GRANT NUMBER

Y6472

5. AUTHOR(S)

J.W. Himes, R.Seibert

6. TYPE OF REPORT

Technical

7. PERIOD COVERED *(Inclusive Dates)*

8. PERFORMING ORGANIZATION - NAME AND ADDRESS *(If NRC, provide Division, Office or Region, U.S. Nuclear Regulatory Commission, and mailing address; if contractor, provide name and mailing address.)*

University of Tennessee
Department of Nuclear Engineering
Knoxville, TN 37966-2210

9. SPONSORING ORGANIZATION - NAME AND ADDRESS *(If NRC, type "Same as above"; if contractor, provide NRC Division, Office or Region, U.S. Nuclear Regulatory Commission, and mailing address.)*

Division of Engineering Technology
Office of Nuclear Regulatory Research
U.S. Nuclear Regulatory Commission
Washington, D.C. 20555-0001

10. SUPPLEMENTARY NOTES

S.A. Arndt, NRC Project Manager

11. ABSTRACT *(200 words or less)*

In 1998, the Electric Power Research Institute (EPRI) submitted Topical Report (TR) 104965, On-Line Monitoring of Instrument Channel Performance for NRC review and approval. This report demonstrated a non-intrusive method for monitoring the performance of instrument channels and extending calibration intervals required by technical specifications (TS). A safety evaluation report (SER) was issued in 2000 in which NRC staff concluded that the generic concept of on-line monitoring (OLM) for tracking instrument performance as discussed in the topical report is acceptable. However, they also listed 14 requirements that must be addressed by plant specific license amendments if the TS-required calibration frequency of safety-related instrumentation is to be relaxed. The SER did not review or endorse either of the two methods addressed in the topical report.

This report, published in two parts, provides an overview of current technologies being applied in the U.S. for sensor calibration monitoring. Part I provides a general overview of current sensor calibration monitoring technologies and their uncertainty analysis, a review of the supporting information necessary for assessing these techniques, and a cross reference between the literature and the requirements listed in the SER. Part II provides an independent evaluation of the application of OLM methods to reduce the TS-required calibration frequency.

12. KEY WORDS/DESCRIPTORS *(List words or phrases that will assist researchers in locating the report.)*

Instrumentation and Control (I&C)
On-line Monitoring
Digital Systems

13. AVAILABILITY STATEMENT

unlimited

14. SECURITY CLASSIFICATION

(This Page)
unclassified

(This Report)
unclassified

15. NUMBER OF PAGES

16. PRICE

PRINTED ON RECYCLED PAPER

Printed
on recycled
paper

Federal Recycling Program

UNITED STATES
NUCLEAR REGULATORY COMMISSION
WASHINGTON, DC 20555-0001

OFFICIAL BUSINESS