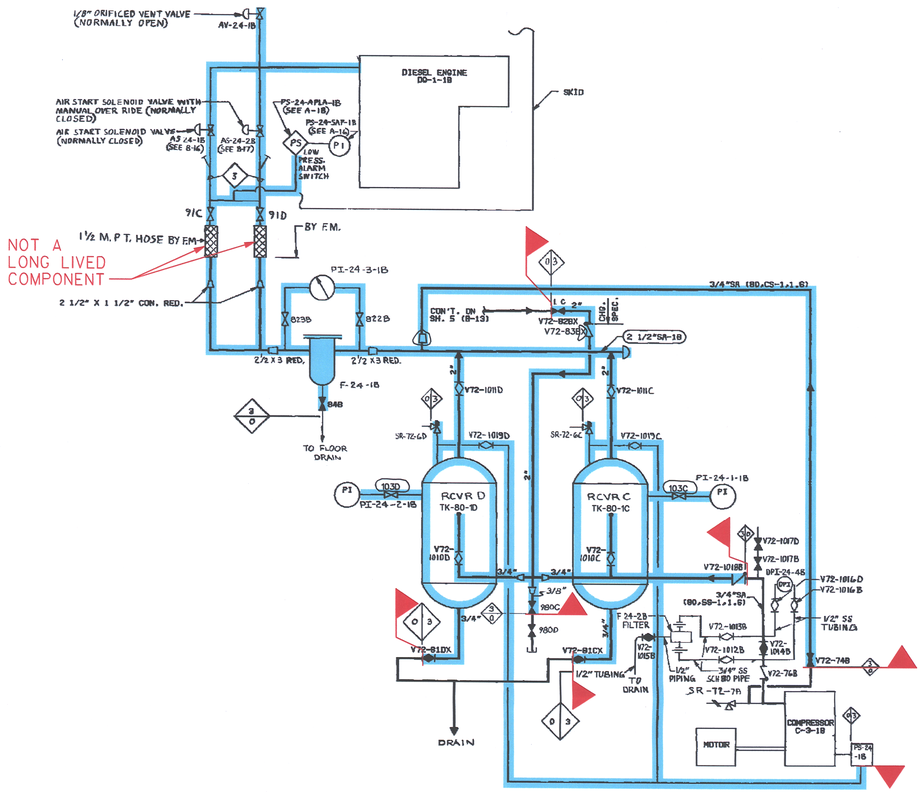

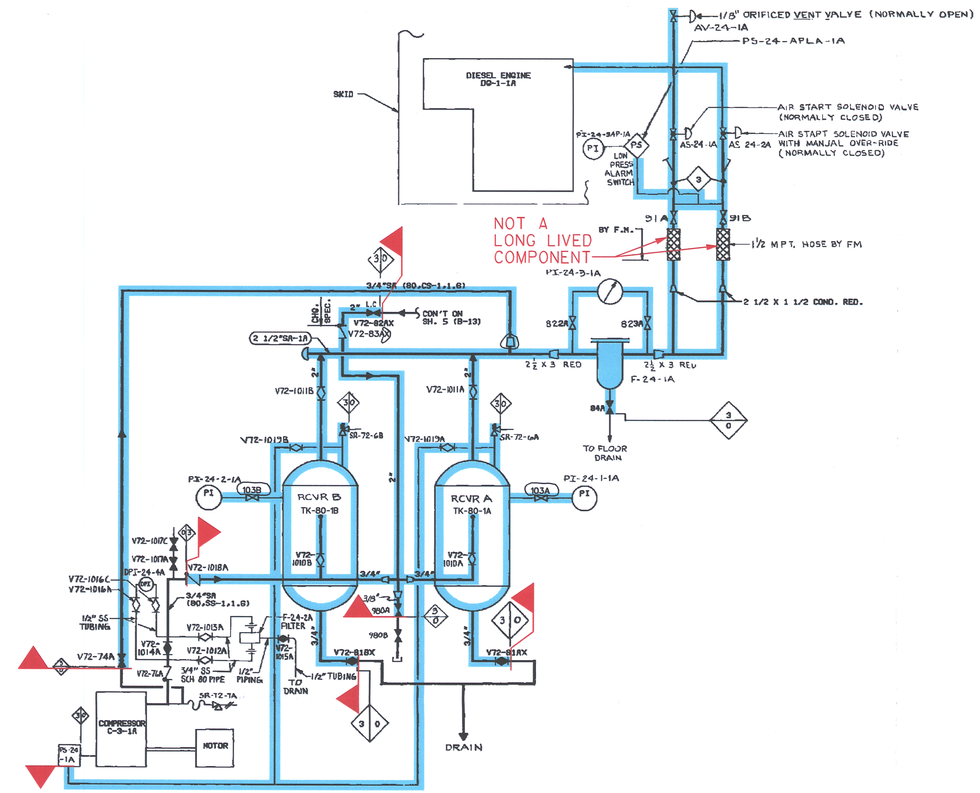

DIESEL GENERATOR STARTING AIR

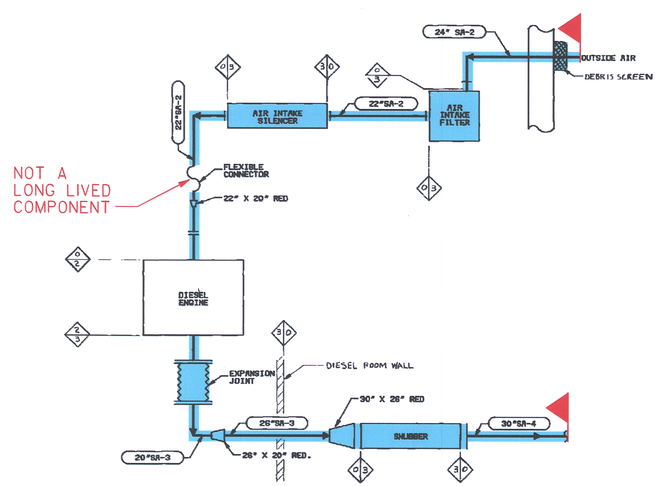

DIESEL GENERATOR INLET & EXHAUST
DG-1-1A
(TYP. FOR DG-1-1B)

NOTE:
1. FOR GENERAL NOTES, PIPING LINE LIST AND REFERENCE DWGS. SEE DWG G-191160 (SHT. 1 OF 8)

SYSTEM INTENDED FUNCTION BOUNDARY

COMPONENTS SUBJECT TO AMR

EMERGENCY DIESEL GENERATOR SYSTEM AMRM-13

REV	DESCRIPTION	BY	CHKD.	APPD.
22	REVISED PER CU 2004-008 & CR-VTY-2003-01406CA-01 & CR-VTY-2004-698CA-02	7-1-04 WD	7-1-04 NL	7-1-04 GSB
21	REVISED PER WO 99-069 & CU 99-112	6-10-99 WTT	6-10-99 TLM	6-20-99 PAR

Entergy Nuclear Northeast

ENTERGY NUCLEAR VERMONT YANKEE
VERNON, VERMONT

DRAWING TITLE: FLOW DIAGRAM DIESEL GENERATOR STARTING AIR SYSTEM

DRAWING NO. G-191160 SH. 7

NO.	DATE	DESCRIPTION	BY	ENG	CHK	APP
0	7-1-05	.	.	.	.	.

REVISIONS

LRA-G-191160-SH-07

CAD FILE: LRA-G-191160-SH-07_22.DGN

RASTER FILE: G-191160-SH-07_22.HMR

THIS IS AN FSAR DRAWING

$DATES $FILES $TIMES

D-15