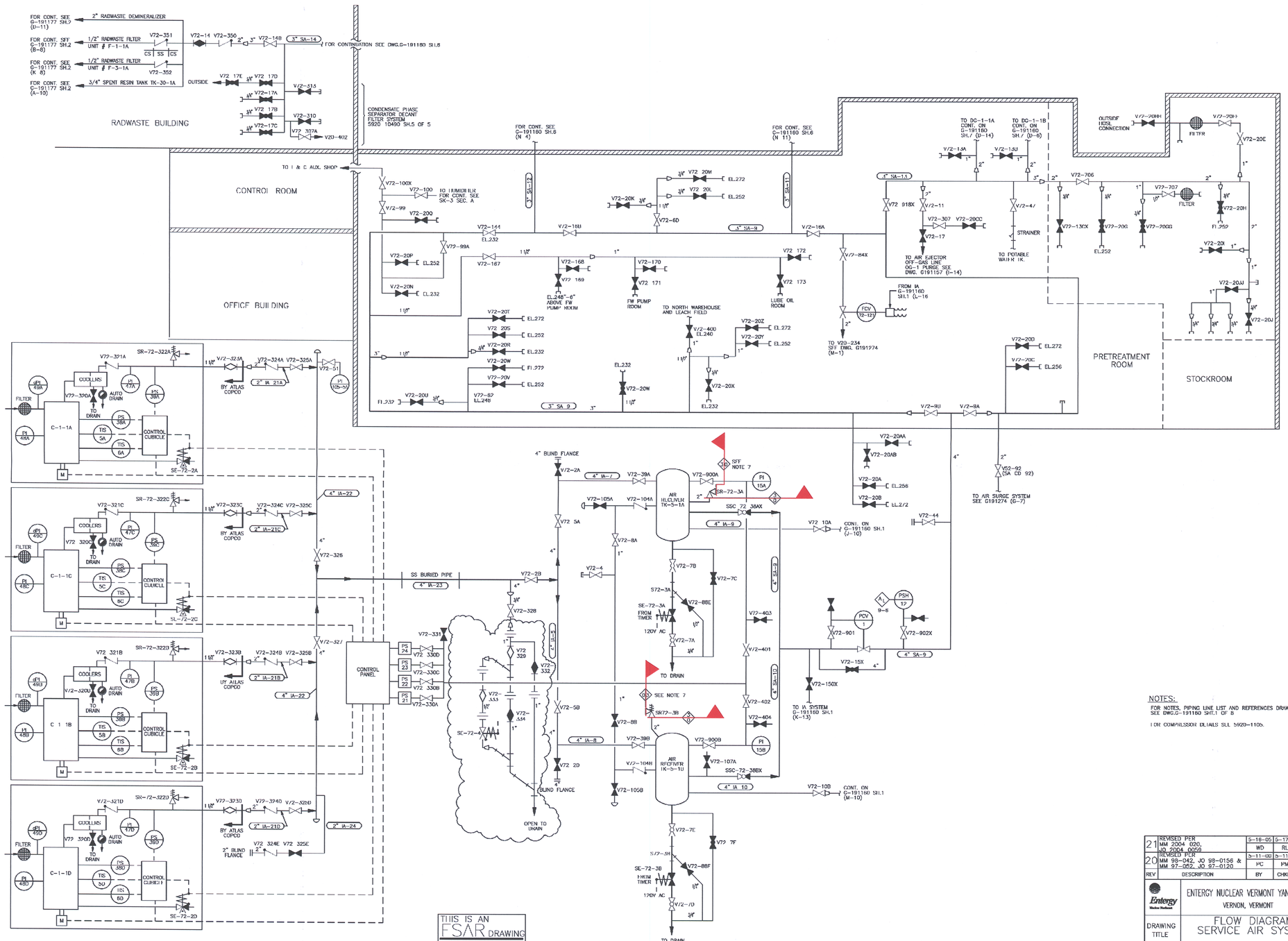

NOTES:

FOR NOTES, PIPING LINE LIST AND REFERENCES DRAWINGS, SEE DWG.G-191160 SH.1 OF 8

FOR COMPRESSOR DETAILS SEE 5920-110b.

REV	DESCRIPTION	BY	CHKD.	APPD.
21	REVISED PER MM 2004 020, JO 2004 0020	WD 5-16-05	RLS 5-17-05	MAB 5-18-05
20	REVISED PER MM 99-042, JO 98-0156 & MM 97-052, JO 97-0120	PC 5-11-00	PMR 5-11-00	PAR 5-22-00

Entergy Nuclear Northeast

ENTERGY NUCLEAR VERMONT YANKEE
VERNON, VERMONT

DRAWING TITLE: FLOW DIAGRAM SERVICE AIR SYSTEM

DRAWING NO. G-191160 SH.5

NO.	DATE	DESCRIPTION	BY	ENG	CHK	APP
0	8-15-05	.	.	.	.	.

REVISIONS

LRA-G-191160-SH-05-0

CAD FILE: LRA-G-191160-SH-05_21.DGN
RASTER FILE: G-191160-SH-05-CALS_21.CAL

SYSTEM INTENDED FUNCTION BOUNDARY

COMPONENTS SUBJECT TO AMR

D-13