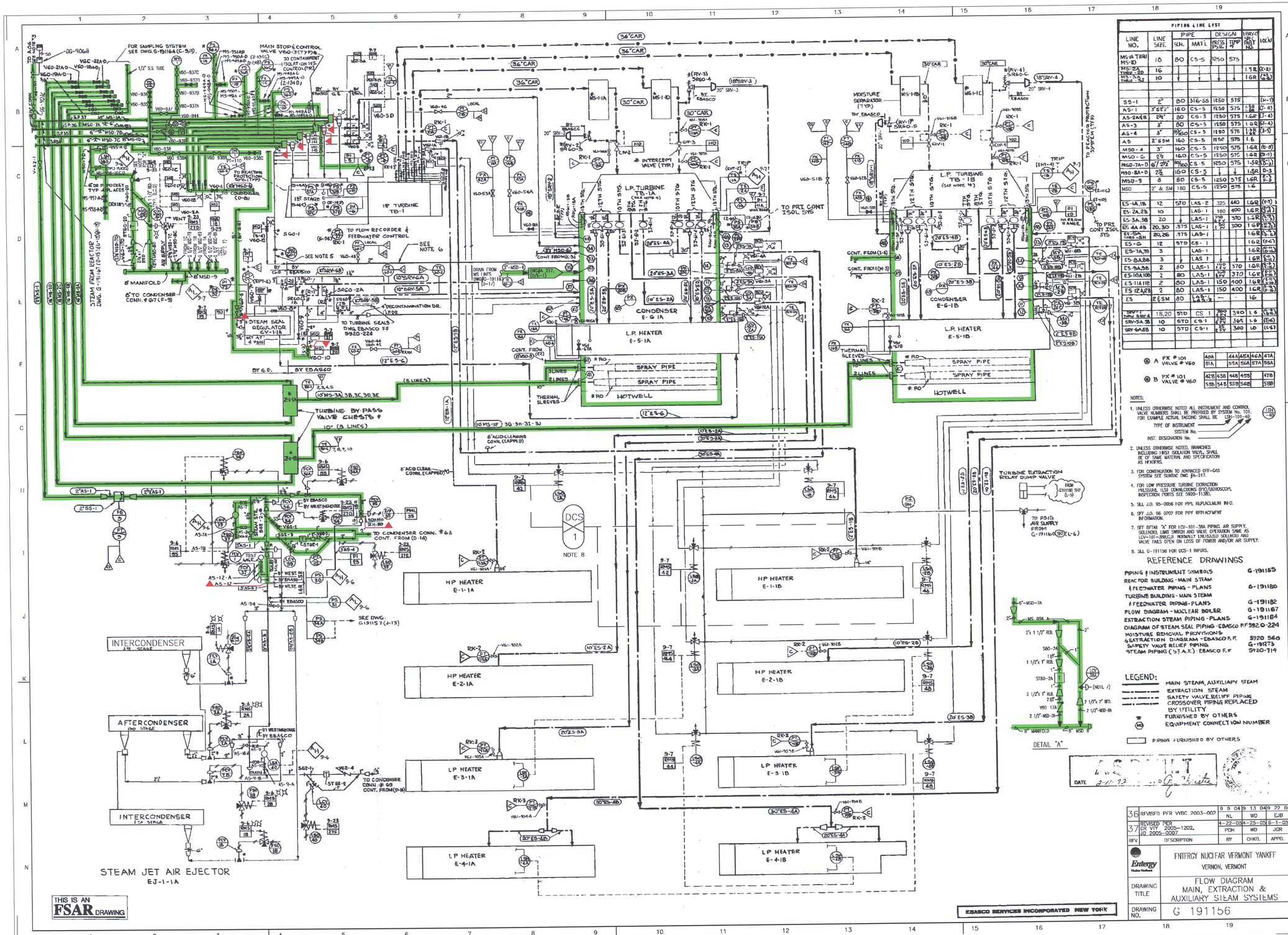

PIPING LINE LIST							
LINE NO.	LINE SIZE	PIPE SCH.	PIPE MAT'L	DESIGN PRESS PSIG	DESIGN TEMP °F	REQ'D SEISMIC CAT'Y NO.	LOCN
MS-1A THRU MS-1D	18	80	CS-5	1250	575		
MS-2A THRU -2D	16	↓	↓	↓	↓	1.5R	(C-2)
MS-3A THRU -3D	10	↓	↓	↓	↓	1.6R	(A-3, B-3)
SS-1	2"	80	316-SS	1250	575		(H-1)
AS-1	3"&6"	160	CS-5	1250	575	1.5R 1.6R	(J-4)
AS-2A&B	2½"	80	CS-5	1250	575	1.6R	(J-4)
AS-3	3"	80	CS-5	1250	575	1.6R	(J-4)
AS-4	3"	80/160	CS-5	1250	575	1.5R 1.6R	(J-5)
AS	2"&SM	160	CS-5	1250	575	1.6	
MSD-4	3"	160	CS-5	1250	575	1.6R	(B-8)
MSD-6	2½"	160	CS-5	1250	575	1.6R	(D-2)
MSD-7A-D	6"/2½"	80/160	CS-5	1250	575	1.5R	(C-3)
MSD-8A-D	2½"	160	CS-5	↓	↓	1.5R	D-3
MSD-9	8	80	CS-5	1250	575	1.6R	E-3
MSD	2" & SM	180	CS-5	1250	575	1.6	
ES-1A,1B	12	STD	LAS-2	325	440	1.6R	(F-1)
ES-2A,2B	10	↓	LAS-1	180	400	1.6R	(F-1)
ES-3A,3B	20	↓	LAS-1	100 & 180	370	1.6R	(E-3)
ES-4A,4B	20,30	.375	LAS-1	100 & 180	300	1.6R	(E-3)
ES-5A,5B TURB-SEH	20,26	.375	LAS-1	↓	↓	1.6R	(E-3)
ES-6	12	STD	CS-1			1.6R	(F-4)
ES-7A,7B	3	↓	LAS-1			1.6R	(E-4)
ES-8A,8B	3	↓	LAS 1			1.6R	(E-4)
ES-9A,9B	2	80	LAS-1	100 & 180	370	1.6R	(E-3)
ES-10A,10B	2	80	LAS-1	100 & 180	370	1.6R	(E-3)
ES-11A,11B	2	80	LAS-1	150	400	1.6R	(E-3)
ES-12A,12B	2	80	LAS-1	150	400	1.6R	(E-3)
ES	2"&SM	80	LAS-1	—	—	1.6	
SRV-1 THRU SRV-4	18,20	STD	CS 1	1250 & 1325	390	1.6	(E-3)
SRV-5A,5B	10	STD	CS-1	1250 & 1325	390	1.6	(E-6)
SRV-6A,6B	10	STD	CS-1	1250 & 1325	390	1.6	(E-6)
Ⓐ A PX # 101 VALVE # V60		40A	44A	45A	46A	47A	
		51A	55A	56A	57A	58A	
Ⓑ B PX # 101 VALVE # V60		42B	43B	44B	45B		47B
		55B	54B	53B	56B		58B

NOTES:

1. UNLESS OTHERWISE NOTED ALL INSTRUMENT AND CONTROL VALVE NUMBERS SHALL BE PREFIXED BY SYSTEM No. 101. FOR EXAMPLE ACTUAL TAGGING SHALL BE 131-101-48
   - TYPE OF INSTRUMENT
   - SYSTEM No.
   - INST. DESIGNATION No.
2. UNLESS OTHERWISE NOTED, BRANCHES INCLUDING FIRST ISOLATION VALVE, SHALL BE OF SAME MATERIAL AND SPECIFICATION AS HEADERS.
3. FOR CONTINUATION TO ADVANCED OFF-GAS SYSTEM SEE SUNDAC DWG JA-217.
4. FOR LOW PRESSURE TURBINE EXTRACTION PRESSURE, TEST CONNECTIONS (PX) (ULTRASCOPE INSPECTION PORTS SEE 5920-11380.
5. SEE J.O. 95-0056 FOR PIPE REPLACEMENT INFO.
6. SEE J.O. 96-0007 FOR PIPE REPLACEMENT INFORMATION.
7. SEE DETAIL "A" FOR LCV-101-38A PIPING. AIR SUPPLY, SOLENOID, LIMIT SWITCH AND VALVE OPERATION SAME AS LCV-101-38B,C,D. NORMALLY ENERGIZED SOLENOID AND VALVE FAILS OPEN ON LOSS OF POWER AND/OR AIR SUPPLY.
8. SEE G-191156 FOR DCS-1 INPUTS.

REFERENCE DRAWINGS

PIPING & INSTRUMENT SYMBOLS	G-191155
REACTOR BUILDING - MAIN STEAM & FEEDWATER PIPING - PLANS	G-191180
TURBINE BUILDING - MAIN STEAM & FEEDWATER PIPING - PLANS	G-191182
FLOW DIAGRAM - NUCLEAR BOILER	G-191167
EXTRACTION STEAM PIPING - PLANS	G-191184
DIAGRAM OF STEAM SEAL PIPING - EBASCO F.F	5920-224
MOISTURE REMOVAL PROVISIONS & EXTRACTION DIAGRAM - EBASCO F.F	5920 568
SAFETY VALVE RELIEF PIPING	G-191273
STEAM PIPING (S.T.A.E.) - EBASCO F.F	5920-714

REV	DESCRIPTION	BY	CHKD.	APPD.
36	REVISED PER VYDC 2003-002	NL 9 9 04	WD 9 13 04	EJB 9 22 04
37	REVISED PER CR VYY 2005-1202, JO 2005-0007	PDH 4-22-05	WD 4-25-05	JGR 5-1-05

Entergy Nuclear Northeast

ENTERGY NUCLEAR VERMONT YANKEE
VERNON, VERMONT

DRAWING TITLE: FLOW DIAGRAM MAIN, EXTRACTION & AUXILIARY STEAM SYSTEMS

DRAWING NO. G 191156

SYSTEM INTENDED FUNCTION BOUNDARY

COMPONENTS SUBJECT TO AMR

MAIN CONDENSER AND MSIV LEAKAGE PATHWAY AMRM-26

NO.	DATE	DESCRIPTION	BY	ENG	CHK	APP
0	8-15-05					

REVISIONS

LRA-G-191156-0

CAD FILE: LRA-G-191156_37.DGN

RASTER FILE: G-191156_37.TIF

D-06