FOR GENERAL NOTES SEE DWG A-201

PIPING LINE LIST							
LINE NO.	LINE SIZES	PIPE SCH	PIPE MAT'L	DESIGN PRESS PSIG	DESIGN TEMP F	EBASCO SPEC PIPE NO	LOCN
SIF-1	16	30	CS	6	200	*	B3
SIF-2	16	30	CS	6	200	*	B3
SIF-3	16	30	CS	6	200	*	B2
SIF-4	16	30	CS	6	200	*	B2

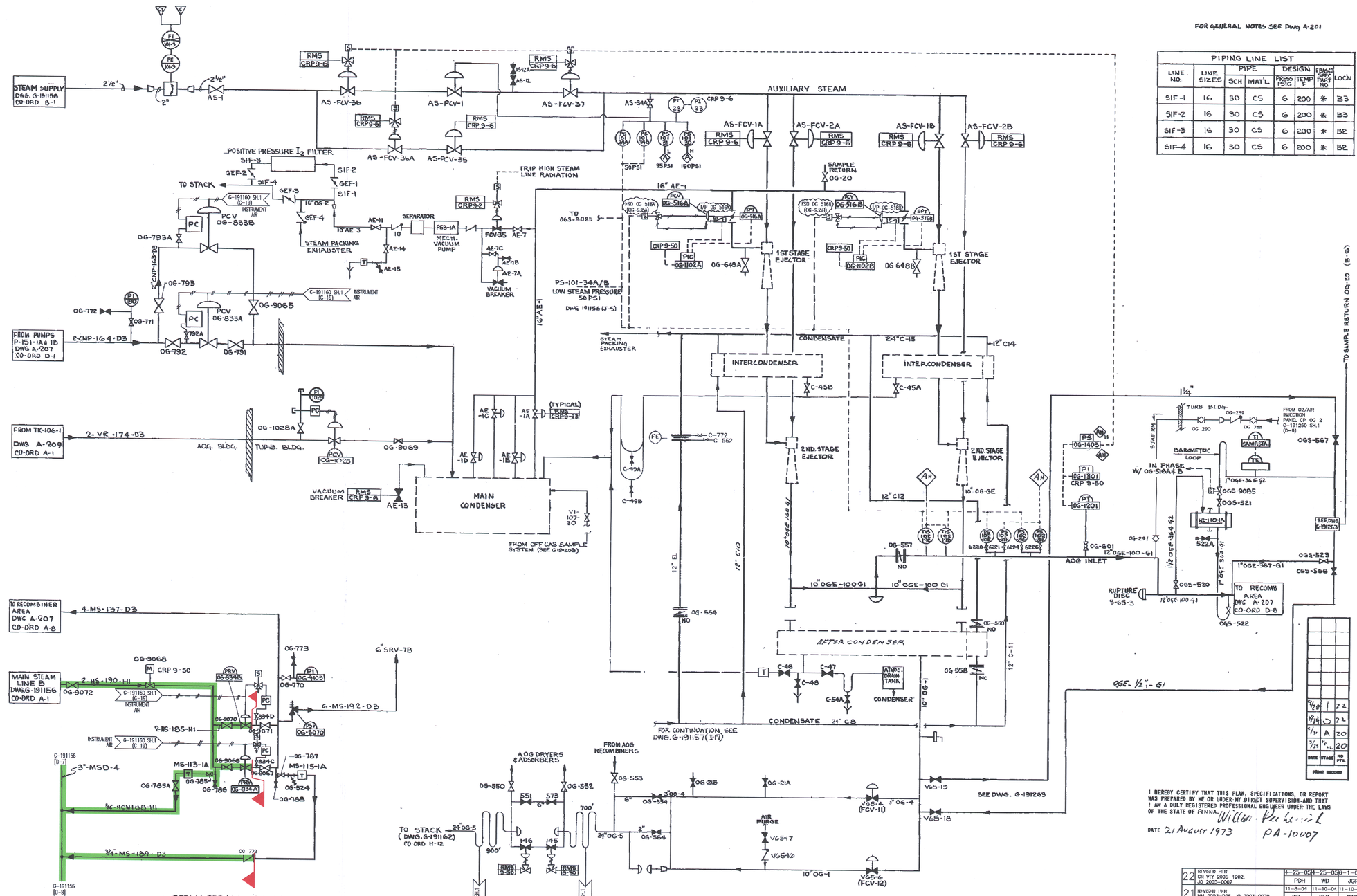

SYSTEM INTENDED FUNCTION BOUNDARY

COMPONENTS SUBJECT TO AMR

MAIN CONDENSER AND MSIV LEAKAGE PATHWAY AMRM-26

NOTE:
THIS DRAWING SUPERSEDES VOIDED DRAWING A-215 REV.6

I HEREBY CERTIFY THAT THIS PLAN, SPECIFICATIONS, OR REPORT WAS PREPARED BY ME OR UNDER MY DIRECT SUPERVISION AND THAT I AM A DULY REGISTERED PROFESSIONAL ENGINEER UNDER THE LAWS OF THE STATE OF PENNA.
DATE 21 August 1973 PA-10007

REV	DESCRIPTION	BY	CHKD.	APPD.
22	REVISED PER CR VTY 2002 1202, JO 2005-0007	PDH 4-25-05	WD 4-25-05	JGR 6-1-05
21	REVISED PER MM 2003-026, JO 2003-0070	WD 11-8-04	RI S 11-10-04	PAR 11-10-04

Entergy Nuclear Northeast

ENTERGY NUCLEAR VERMONT YANKEE
VERNON, VERMONT

DRAWING TITLE: ENGINEERING FLOW DIAGRAM TURBINE BLDG. AREA OFF GAS MODIFICATION

JOB NO.

DRAWING NO. 33600-A-217

PREPARED BY SUNTAC NUCLEAR CORPORATION 1526 TALBOT STREET PHILADELPHIA, PENNSYLVANIA 19102

NO.	DATE	DESCRIPTION	BY	ENG	CHK	APP
0	8-15-05					

REVISIONS

LRA-33600-A-217-0

CAD FILE LRA-33600-A-00217_22.DGN

RASTER FILE 33600-A-00217-CALS_22.CAL

D-01