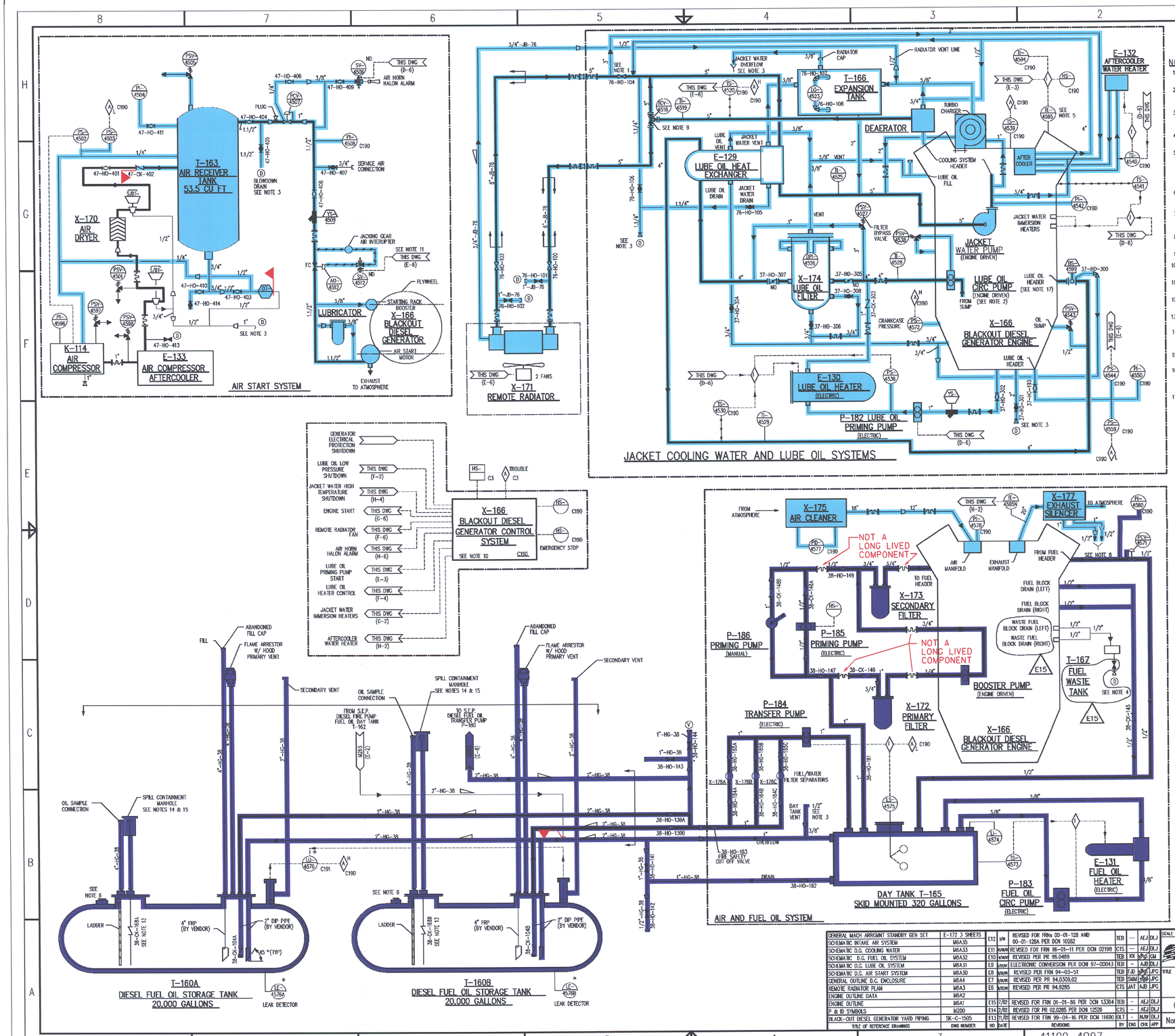

NOTES:

1. AFTERCOOLER FLOW GLOBE VALVE IS FACTORY SET NO FIELD ADJUSTMENTS SHOULD BE MADE.
2. LUBE OIL CIRCULATING PUMP DRAWS SUCTION FROM THE LUBE OIL SUMP. THE INTERNAL RELIEF VALVE RETURNS TO THE LUBE OIL SUMP.
3. DRAINS AND VENTS REFERENCED TO THIS NOTE ARE ROUTED THROUGH THE ENCLOSURE WALL. ALL OTHER DRAINS AND VENTS DISCHARGE WITHIN THE ENCLOSURE.
4. FUEL DRAIN WASTE TANK IS MOUNTED UNDER ENCLOSURE FLOOR. (E15)
5. ONE THERMOCOUPLE PER CYLINDER HEAD TO MEASURE EXHAUST TEMPERATURE (INSTRUMENT NUMBERS TE-4595A-M EXCLUDING 1), PLUS ONE THERMOCOUPLE ON EXHAUST STACK (INSTRUMENT NUMBER TE-4595M). ALL SENSORS INPUT TO THE ENGINE INSTRUMENT PANEL WHERE A SELECTOR INPUTS TO A COMMON TEMPERATURE INDICATOR.
6. MANHOLE WITH 4" NOZZLE (PLUGGED) AND LADDER DOWN TO BOTTOM OF TANK – SEE M100C73. SPILL CONTAINMENT AND OVERFILL VALVE SEE DETAIL 1, M100C73.
7. ALL PIPING AND VALVES INSIDE VENDOR BOUNDARIES ARE DESIGNED AND FABRICATED IN ACCORDANCE WITH MANUFACTURERS STANDARD SPECIFICATIONS.
8. FINAL DISPOSITION OF EXHAUST SILENCER DRAIN TO BE DETERMINED AFTER START-UP TESTING.
9. VALVE OPENS WHEN ENGINE REACHES OPERATING TEMPERATURE.
10. FOR ENGINE AND GENERATOR CONTROL LOGIC DIAGRAMS SEE DWGS. M6A99, M6A100, M6A101 AND S-M-420.
11. SOLENOID OPERATOR FOR THE AIR START MOTOR VALVE HAS A MANUAL OVERRIDE LOCATED AT THE VALVE.
12. WHERE THERE ARE NO VALVE MARK NUMBERS– VENDOR SUPPLIED.
13. DOVER CORP/OPW DIVISION OVERFILL PREVENTION VALVE OPW61-SO. SEE VENDOR MANUAL NO. VT186.
14. DOVER CORP/OPW DIVISION – SPILL CONTAINMENT MANHOLE MODEL NO. OPW1-4580. SEE VENDOR MANUAL NO. VT186.
15. THERE IS A RAIN TIGHT LID UNDER MANHOLE COVER. SEE DETAIL D ON M100C70.
16. DELETED
17. INLINE PRELUBE CHECK/POPPET VALVES TO THE LUBE OIL HEADERS AND TURBOCHARGER HAVE BEEN REPLACED/ INSTALLED AND NUMBERED. (FRN 00-01-128).

VALVE LOCATION	NUMBER
SUPPLY LINE TO TURBOCHARGER	37-CK-312
SUPPLY LINE TO CYLINDERS (LEFT SIDE)	37-CK-313
SUPPLY LINE TO CYLINDERS (RIGHT SIDE)	37-CK-314

ABBREVIATIONS & SYMBOLS

DGCS – DIESEL GENERATOR CONTROL SYSTEM
FRP – FIBERGLASS REINFORCED PLASTIC
BOUNDARY OF VENDOR SUPPLIED ITEMS
SEPARATOR/DRAIN TRAP

SYSTEM INTENDED FUNCTION BOUNDARY

COMPONENTS SUBJECT TO AMR

STATION BLACKOUT DIESEL GENERATOR SYSTEM AMRM-14

FUEL OIL SYSTEM AMRM-15

GENERAL MACH ARRGMNT STANDBY GEN SET	E-172 3 SHEETS	E12	5/99	REVISED FOR FRNs 00-01-128 AND 00-01-126A PER DCN 10282	TEB	—	AEJ	DLJ
SCHEMATIC INTAKE AIR SYSTEM	M6A35							
SCHEMATIC D.G. COOLING WATER	M6A33	E11	10/98	REVISED FOR FRN 98-01-11 PER DCN 02198	CTS	—	AEJ	DLJ
SCHEMATIC D.G. FUEL OIL SYSTEM	M6A32	E10	6/98	REVISED PER PR 98.0469	TEB	KK	SPS	GM
SCHEMATIC D.G. LUBE OIL SYSTEM	M6A31	E9	10/97	ELECTRONIC CONVERSION PER DCN 97-00043	TEB	—	AJB	DLJ
SCHEMATIC D.G. AIR START SYSTEM	M6A30	E8	10/96	REVISED PER FRN 94-03-51	TEB	EJD	SPS	LPC
GENERAL OUTLINE D.G. ENCLOSURE	M6A4	E7	10/96	REVISED PER PR 94.0309.02	TEB	SMM	SPS	LPC
REMOTE RADIATOR PLAN	M6A3	E6	10/96	REVISED PER PR 94.9285	CTS	JAT	AJB	LPC
ENGINE OUTLINE DATA	M6A2							
ENGINE OUTLINE	M6A1	E15	7/02	REVISED FOR FRN 01-01-86 PER DCN 13384	TEB	—	AEJ	DLJ
P & ID SYMBOLS	M200	E14	2/02	REVISED FOR PR 02.0285 PER DCN 12526	CTS	—	AEJ	DLJ
BLACK-OUT DIESEL GENERATOR YARD PIPING	SK-C-1505	E13	11/01	REVISED FOR FRN 99-04-16 PER DCN 11690	OLT	—	NJW	DLJ
TITLE OF REFERENCE DRAWINGS	DWG NUMBER	NO	DATE	REVISIONS	BY	ENG	CHK	APP

SCALE NONE — DESIGNED MECH/EL/PENGRE — DRAWN C T SURETTE — E

BOSTON EDISON

PILGRIM STATION NO. 820
BOSTON EDISON COMPANY

TITLE
P & ID
STATION BLACKOUT DIESEL GENERATOR SET

Q [X] Non Q — DRAWING NO. M264 — REV E15

Q:\MECH\P&ID\M264

NO.	DATE	DESCRIPTION	BY	ENG	CHK	APP
0	6-21-05					

REVISIONS

LRA-M-264-0

CAD FILE LRA-M-264_E15.DGN
MASTER FILE M264-CALS_E15.CAL