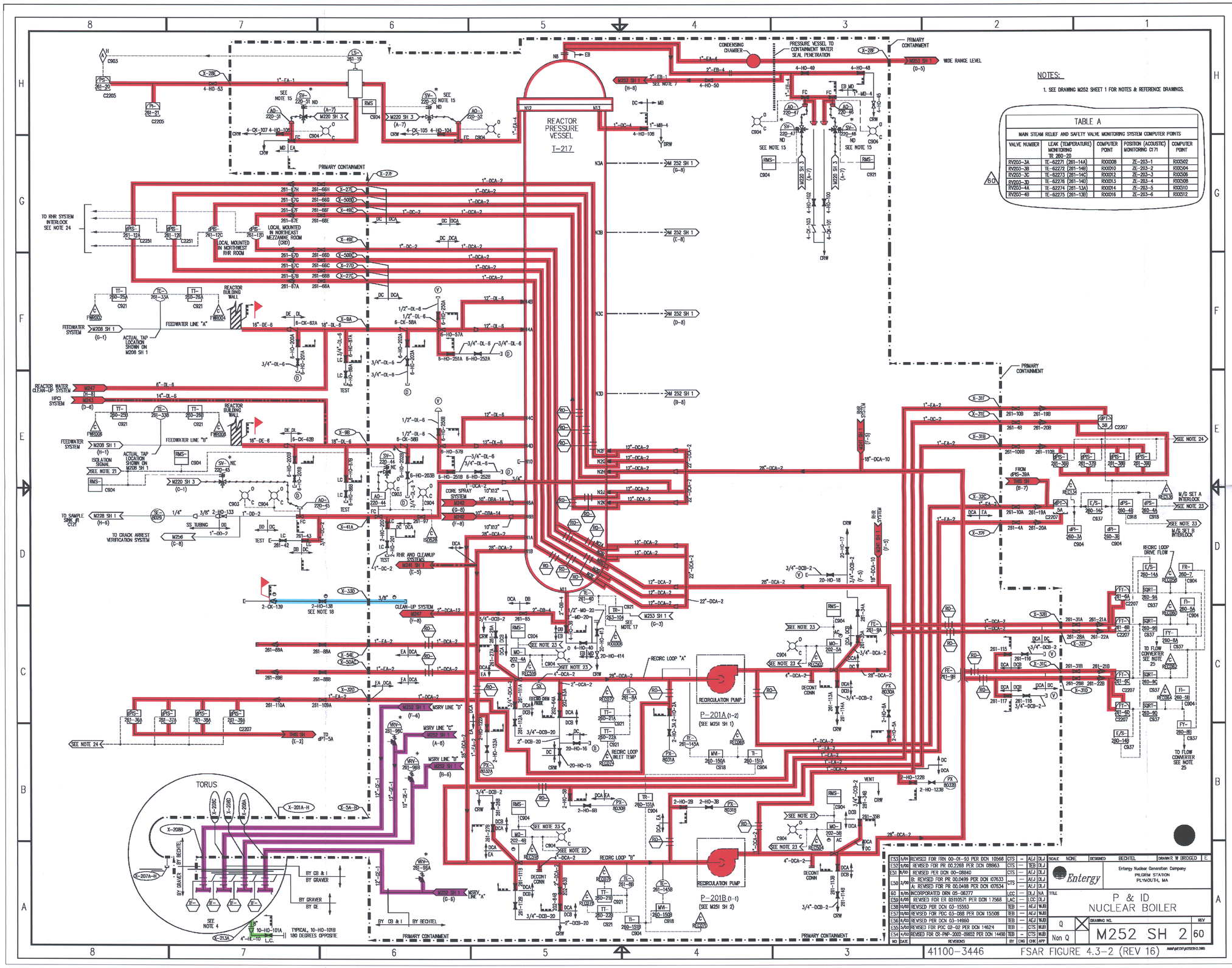

NOTES:

1. SEE DRAWING M252 SHEET 1 FOR NOTES & REFERENCE DRAWINGS.

TABLE A

MAIN STEAM RELIEF AND SAFETY VALVE MONITORING SYSTEM COMPUTER POINTS

VALVE NUMBER	LEAK (TEMPERATURE) MONITORING TR 260-20	COMPUTER POINT	POSITION (ACOUSTIC) MONITORING C171	COMPUTER POINT
RV203-3A	TE-62271 (261-14A)	R00008	ZE-203-1	R00502
RV203-3B	TE-62272 (261-14B)	R00010	ZE-203-2	R00504
RV203-3C	TE-62273 (261-14C)	R00012	ZE-203-3	R00506
RV203-3D	TE-62276 (261-14D)	R00013	ZE-203-4	R00508
RV203-4A	TE-62274 (261-13A)	R00014	ZE-203-5	R00510
RV203-4B	TE-62275 (261-13B)	R00016	ZE-203-6	R00512

SYSTEM INTENDED FUNCTION BOUNDARY

COMPONENTS SUBJECT TO AMR

- RESIDUAL HEAT REMOVAL SYSTEM AMRM-02
- AUTOMATIC DEPRESSURIZATION SYSTEM AMRM-04
- PRIMARY CONTAINMENT PENETRATIONS AMRM-20
- REACTOR COOLANT SYSTEM PRESSURE BOUNDARY AMRM-33

NO.	DATE	REVISIONS	BY	ENG	CHK	APP
E53	5/01	REVISED FOR FRN 00-01-93 PER DCN 10568	CTS	—	AEJ	DLJ
E52	9/99	REVISED FOR PR 00.2268 PER DCN 08963	CTS	—	TEB	DLJ
E51	11/00	REVISED PER DCN 00-08840	CTS	—	AEJ	DLJ
E50	2/99	B: REVISED FOR PR 00.0499 PER DCN 07633	CTS	—	AEJ	DLJ
		A: REVISED FOR PR 00.0488 PER DCN 07834		—	AEJ	DLJ
60	9/05	INCORPORATED DRN 05-06277	LCC	—	DLJ	NA
E59	6/05	REVISED FOR ER 05110571 PER DCN 17568	LAC	—	LCC	DLJ
E58	10/03	REVISED PER DCN 03-15593	TEB	—	AEJ	WJS
E57	10/03	REVISED FOR PDC 03-068 PER DCN 15508	TEB	—	AEJ	WJS
E56	6/03	REVISED PER DCN 03-14960	TEB	—	AEJ	WJS
E55	5/03	REVISED FOR PDC 02-02 PER DCN 14624	TEB	—	CTS	WJS
E54	4/03	REVISED FOR CR-PNP-2002-0852 PER DCN 14490	TEB	—	CTS	WJS

SCALE: NONE | DESIGNED: BECHTEL | DRAWN: R. W. BRIDGED | E.

Entergy

Entergy Nuclear Generation Company
PILGRIM STATION
PLYMOUTH, MA

TITLE: P & ID NUCLEAR BOILER

Q [X] Non Q

DRAWING NO. M252 SH 2 | REV 60

NO.	DATE	DESCRIPTION	BY	ENG	CHK	APP
0	11-14-05					

REVISIONS

LRA-M-252-SH-02-0

CAD FILE: LRA-M-252-SH-02_E60.DGN

MASTER FILE: M252SH2-CALS_E60.CAL

41100-3446

FSAR FIGURE 4.3-2 (REV 16)

D-48