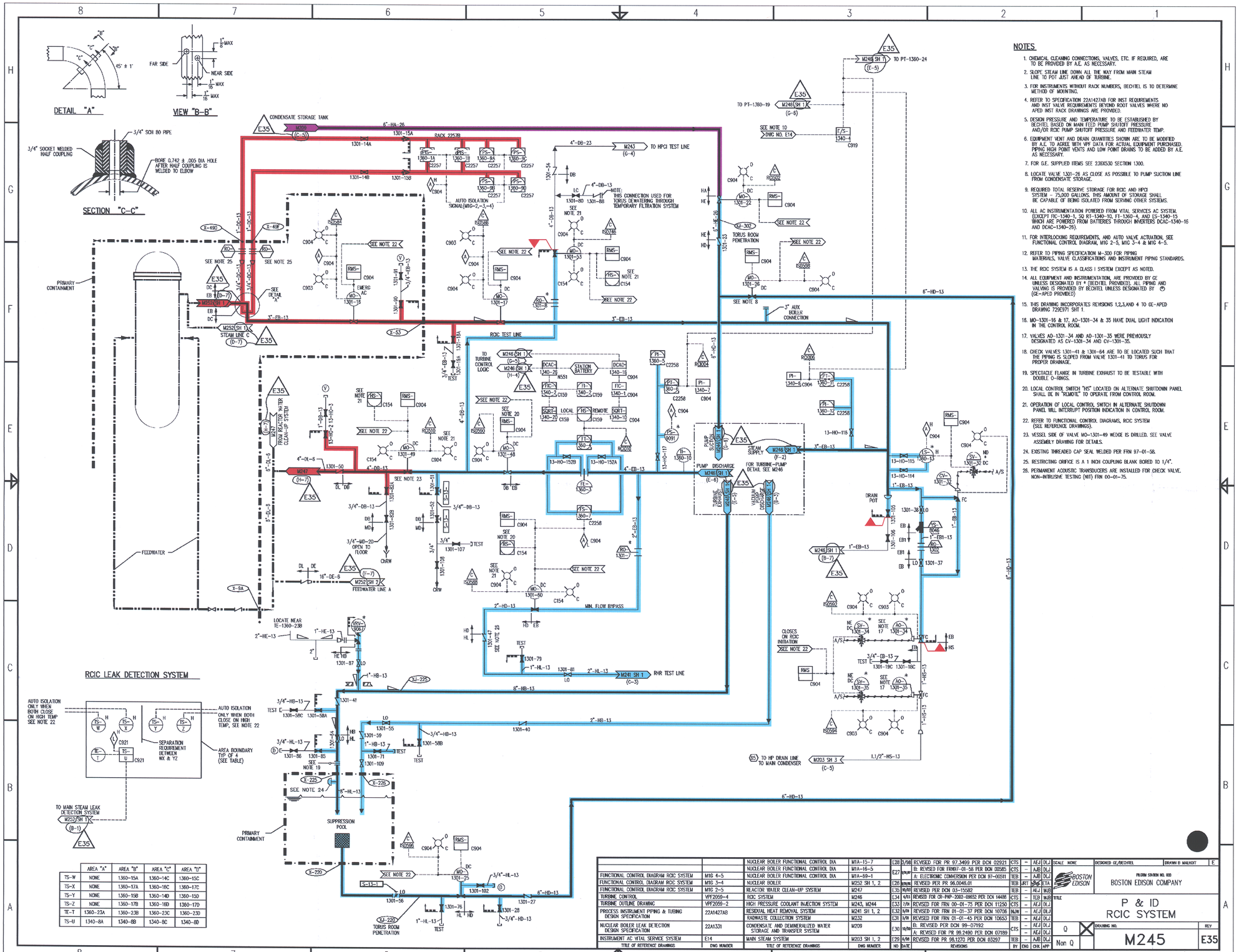
DETAIL "A"
VIEW "B-B"
SECTION "C-C"
3/4" SCH 80 PIPE
3/4" SOCKET WELDED HALF COUPLING
BORE 0.742 ± .005 DIA HOLE AFTER HALF COUPLING IS WELDED TO ELBOW
FAR SIDE
NEAR SIDE
CONDENSATE STORAGE TANK
TO HPCI TEST LINE
TO PT-1360-24
TO PT-1360-19
TORUS ROOM PENETRATION
PRIMARY CONTAINMENT
FEEDWATER
FEEDWATER LINE A
RCIC TEST LINE
TO TURBINE CONTROL LOGIC
STATION BATTERY
STEAM SUPPLY
PUMP SUCTION
PUMP DISCHARGE
TURBINE EXHAUST
VACUUM PUMP DISCHARGE
FOR TURBINE-PUMP DETAIL SEE M246
MIN. FLOW BYPASS
RHR TEST LINE
TO HP DRAIN LINE TO MAIN CONDENSER
DRAIN POT
SUPPRESSION POOL
TORUS ROOM PENETRATION
RCIC LEAK DETECTION SYSTEM
AUTO ISOLATION ONLY WHEN BOTH CLOSE ON HIGH TEMP SEE NOTE 22
AUTO ISOLATION ONLY WHEN BOTH CLOSE ON HIGH TEMP, SEE NOTE 22
SEPARATION REQUIREMENT BETWEEN WX & YZ
AREA BOUNDARY TYP OF 4 (SEE TABLE)
TO MAIN STEAM LEAK DETECTION SYSTEM
AUTO ISOLATION SIGNAL(M16-2,-3,-4)
NOTE: THIS CONNECTION USED FOR TORUS DEWATERING THROUGH TEMPORARY FILTRATION SYSTEM
CLOSES ON RCIC INITIATION
SEE NOTE 22
SEE NOTE 25
SEE NOTE 8
SEE NOTE 23
SEE NOTE 24
SEE NOTE 19
SEE NOTE 20
SEE NOTE 21
SEE DETAIL "A"
3" AUX BOILR CONNECTION
LOCATE NEAR TE-1360-23B
TO PT-1360-24
TO PT-1360-19
M243 TO HPCI TEST LINE
M241 SH 1 RHR TEST LINE
M203 SH 3 (C-5)
M252 SH 2 FEEDWATER LINE A
M252 SH 1 STEAM LINE C
M257 SH 1 (B-1)
M247 FROM REACTOR INTER CLEAN-UP SYSTEM
M246 SH 1 (E-6)
M246 SH 1 (B-7)
M246 SH 1 (C-5)
M246 SH 1 (H-4)
M246 SH 1 (F-2)
M246 SH 1 (F-5)
M246 SH 1 (E-5)
M246 SH 1 (G-5)
M246 SH 1 (G-8)
M246 SH 1 (E-7)
M246 SH 1 (D-7)
M246 SH 1 (F-4)
M246 SH 1 (H-7)
M246 SH 1 (C-3)
M246 SH 1 (E-7)
M246 SH 1 (D-7)
M246 SH 1 (E-5)
M246 SH 1 (F-5)
M246 SH 1 (F-2)
M246 SH 1 (E-6)
M246 SH 1 (B-7)
M246 SH 1 (C-3)
M247 (H-7)
M247 (H-7)
M252 SH 1 (D-7)
M252 SH 2 (E-7)
M252 SH 1 (D-7)
M252 SH 1 (E-7)
M252 SH 1 (D-7)
M252 SH 1 (E-7)
M252 SH 1 (D-7)
M252 SH 1