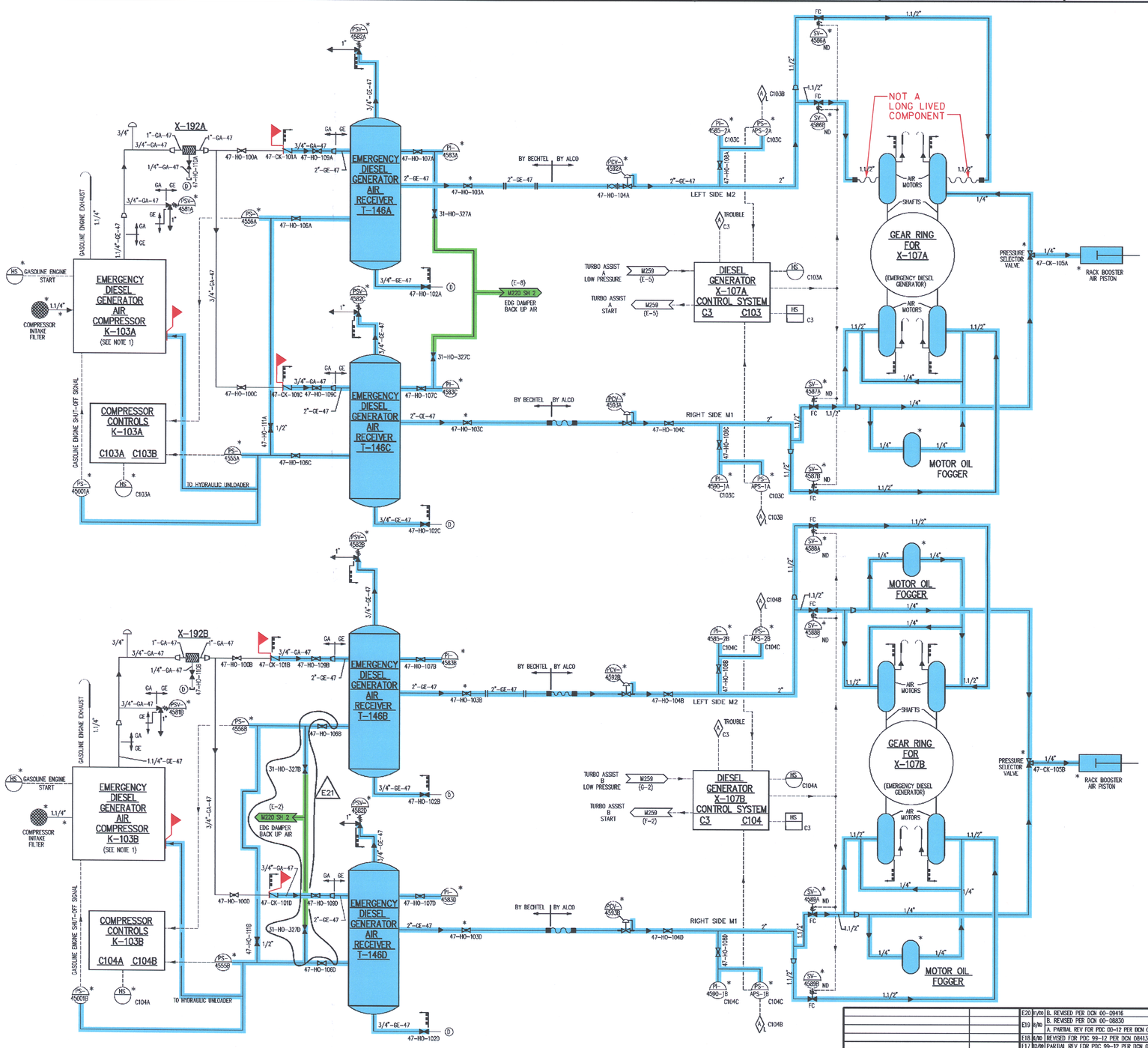

PNPS\ALCO CROSS REFERENCE		
VENDOR TAG #	X-107A	X-107B
ASV4	SV-4586A	
ASV2	SV-4586B	
ASV3	SV-4587A	
ASV1	SV-4587B	
ASV4		SV-4588A
ASV2		SV-4588B
ASV3		SV-4589A
ASV1		SV-4589B

NOTES:

1. ANCHOR BOLTS FOR K-103A & B MUST REMAIN INTACT DURING A SEISMIC EVENT IN ORDER TO MAINTAIN PRESSURE BOUNDARY OF PS-4556A & B AND PS-45001A & B'S TUBING.

SYSTEM INTENDED FUNCTION BOUNDARY

COMPONENTS SUBJECT TO AMR

EMERGENCY DIESEL GENERATOR AMRM-13

INSTRUMENT AIR SYSTEM AMRM-16

NO	DATE	REVISIONS	BY	ENG	CHK	APP
E20	01/00	B. REVISED PER DCN 00-09416	AJB	–	AEJ	DLJ
E19	8/00	B. REVISED PER DCN 00-08830	TEB	–	AEJ	DLJ
		A. PARTIAL REV FOR PDC 00-12 PER DCN 08826		–	AEJ	DLJ
E18	6/00	REVISED FOR PDC 99-12 PER DCN 08413	CTS	–	AJB	DLJ
E17	12/99	PARTIAL REV FOR PDC 99-12 PER DCN 07422	TEB	–	AEJ	DLJ
E16	9/9/97	ELECTRONIC CONVERSION PER DCN 97-0028D	CTS	–	AJB	DLJ
E15	10/9/97	REVISED PER PR 92.0109	JLP	TMH	MSM	JPG
E14	10/9/97	REVISED PER PDC 91-61	SMP	SMP	MSM	JPG
E13	11/11/97	B – REVISED PER DCN 92-85812	GEO	GEO	JAT	JPG
		A – REVISED PER PDC 91-61	JAT	JAT	LCC	
E21	10/02	REVISED PER DCN 02-13891	TEB	–	AEJ	WJB

TITLE OF REFERENCE DRAWINGS	DWG NUMBER
P & ID DIESEL GENERATOR TURBO AIR ASSIST SYSTEM	M259

SCALE NONE | DESIGNED ALCO/BECHTEL | DRAWN B MALHOIT | E

BOSTON EDISON

PILGRIM STATION NO. 600
BOSTON EDISON COMPANY

TITLE
P & ID DIESEL GENERATOR AIR START SYSTEM

Q | Non Q | DRAWING NO. M219 | REV E21

41100-4408

Q:\MECH\P&ID\M219.DWG

NO.	DATE	DESCRIPTION	BY	ENG	CHK	APP
0	11-16-05	.	.	.	.	.

REVISIONS

LRA-M-219-0

CAD FILE LRA-M-219_E21.DGN

MASTER FILE M219-CALS_E21.CAL

D-21