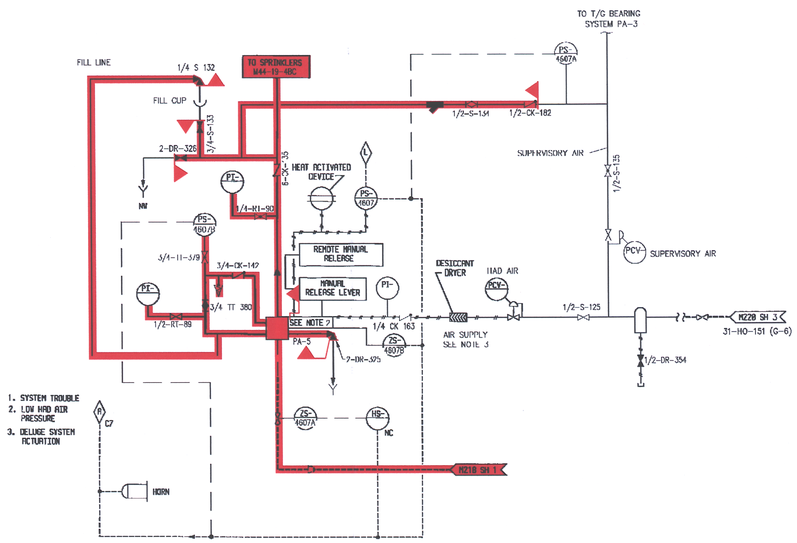

ARRANGEMENT FOR PA-5
HYDROGEN SEAL OIL AREA SPRINKLER SYSTEM

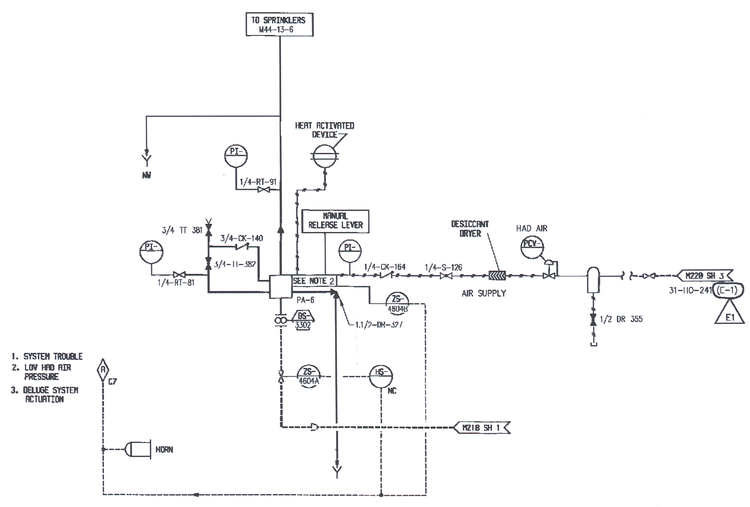

ARRANGEMENT FOR PA 6
RR MG SET SPRINKLER SYSTEM

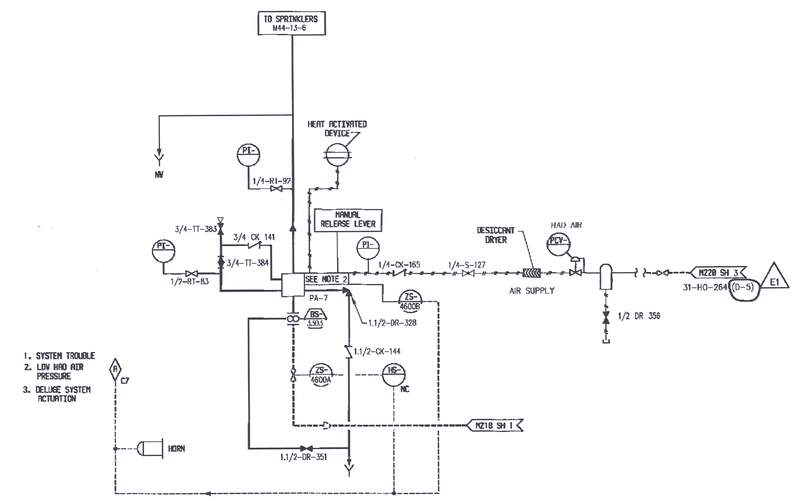

ARRANGEMENT FOR PA-7
TURBINE LUBE OIL RESERVOIR
PRE-ACTION SPRINKLER SYSTEM

NOTES:

1. THIS NOTE IS TO EXPLAIN THE BECO QUALITY ASSURANCE LIMITS FOR FIRE PROTECTION. THE FOLLOWING SYMBOL IDENTIFIES THE BOUNDARY FOR FIRE PROTECTION.

   FP-Q | NON FP-Q

   FP-Q IS THE SYMBOL FOR THE PILGRIM Q LIST DESIGNATION FOR FIRE PROTECTION QUALITY ASSURANCE REQUIREMENT. PILGRIM Q LIST SECTION IV HAS DECLARED VARIOUS FIRE PROTECTION SYSTEMS AS Q-NON SAFETY RELATED i.e.. QNSR. SEE BECO SPECIFICATION M-504 AND PILGRIM Q LIST SECTION IV FOR MORE DETAILS. NON FP-Q IS THE SYMBOL USED TO DESIGNATE THOSE FIRE PROTECTION SYSTEM COMPONENTS THAT MUST MEET THE REQUIREMENTS OF THE MASSACHUSETTS BUILDING CODE, BECO INSURANCE COMPANY OR THE U.S. OSHA FIRE PROTECTION REGULATIONS.

2. THIS IS THE SUPROTEX WEIGHT RELEASING CABINET. THE WEIGHT IS RELEASED BY THE PNEUMATICALLY ACTUATED MERCURY CHECKS INSIDE THIS CABINET. OR MANUALLY AT THE LOCAL PULL STATION.

3. WHERE A SYSTEM IS NON FP-Q, ALL PIPING AND COMPONENTS DOWN STREAM OF THE CONTROL VALVE ARE NON FP-Q (PA-6 AND PA-7). WHERE A SYSTEM IS FP-Q (PA-5), PIPING AND COMPONENTS DOWNSTREAM OF PRESSURE GAGE ROOT VALVES, INSPECTORS TEST CONNECTIONS (ITC) AND DRAINS ARE NON FP-Q. ALL AIR SUPPLY PIPING AND COMPONENTS ARE NON FP-Q.

SYSTEM INTENDED FUNCTION BOUNDARY

COMPONENTS SUBJECT TO AMR

FIRE PROTECTION - WATER SYSTEM AMRM-17

SCHEMATIC DELUGE SYSTEMS	E175				
PANEL C7 ANNUNCIATOR INPUTS	E123				
FUNCTIONAL DESCRIPTION FIRE PROTECTION SYSTEM	SM417 SH 5 & SH 6	R1	9/99	REVISED PER DCN 03-15385	
VENDOR MANUAL "AUTOMATIC SPRINKLER"	VM194	E0	9/99	ISSUED PER DCN 98-03704	
TITLE OF REFERENCE DRAWINGS	DRAWING NO.	NO.	DATE	REVISIONS	

TRN — AJS WJB
CTS — AJB DLJ
BY ENG CHK APP

SCALE NONE | DESIGNED BECO | DRAWN SCAN | E

BOSTON EDISON

PILGRIM STATION
BOSTON EDISON COMPANY

P & ID
FIRE PROTECTION DELUGE SYSTEM

Q SEE NOTE 1 | Non Q

DRAWING NO. M218 SH 6 | REV. E1

41100-3800

Q:\MECH\P&ID\M218SH7.CAL & DWG

NO.	DATE	DESCRIPTION	BY	ENG	CHK	APP
0	2-4-05	.	.	.	.	.

REVISIONS

LRA-M-218-SH-06-0

CAD FILE LRA-M-218-SH-06_E01.DGN

MATCH FILE M218SH6-CALS_E01.CAL

D-17