CHAPTER 4

Emergency Classification System

This chapter describes the classification and EAL scheme that will be used to determine the minimum response to an abnormal event at the EGC ESP Facility. This information is presented in the following sections:

- Unusual Event (Section 4.1)
- Alert (Section 4.2)
- Site Area Emergency (Section 4.3)
- General Emergency (Section 4.4)
- Recovery (Section 4.5)
- Classification Downgrading (Section 4.6)
- Guidance for Termination of an Emergency (Section 4.7)
- EGC ESP Facility Security Plan (Section 4.8)
- Emergency Action Levels (Section 4.9)
- Relationship to Off-Site Classification Systems and Procedures (Section 4.10).

The EAL scheme is based on anticipated plant systems, effluent parameters, and operating procedures. The initial response of federal, state, and county agencies will be dependent upon information provided by the ERO. The Applicant will work closely with the state and county agencies to ensure consistency in classification schemes and procedural interfaces (see Chapter 16). This information is based on and consistent with the *Exelon Nuclear Standardized Radiological Emergency Plan* (EGC, 2003).

The Emergency Plan provides for classification of emergencies into five categories or conditions, covering the postulated spectrum of emergency situations. The first four categories—notification of unusual event, alert, site area emergency, and general emergency—will be characterized by EALs or event initiating conditions and address emergencies of increasing severity, as discussed in Section 4.9 (NUMARC, 1994). The fifth category, the recovery classification, is unique in that it may be viewed as a phase of the emergency that requires specific criteria to be met and/or considered prior to its declaration. Recovery is that period when the emergency phase is over and activities are in progress to return the situation to a normal state (acceptable condition).

4.1 Unusual Event

An unusual event is described as follows by the USNRC:

> "Event(s) are in progress or have occurred which indicate a potential degradation of the level of safety of the plant. No release of radioactive material requiring off-site response or monitoring are expected unless further degradation of safety systems occurs" (USNRC, 1980).

The unusual event is the least severe of the four level schemes. One purpose of this classification is to bring response personnel and off-site agencies to a state of readiness in the event the situation degrades. An additional purpose is to provide systematic handling of information and decision-making. An unusual event will be classified by the Shift Manager (Shift Emergency Director), as discussed in Section 3.3.5.1.1. Required actions at this classification will include the following:

- Notifications to facility management and the NDO;
- Notification, within 15 minutes, to the state and local communities;
- Initiation of full or selective staffing of the TSC, OSC, and EOF, at the discretion of the Emergency Director, facility management, or the NDO;
- Notification to the USNRC as soon as possible, but within 60 minutes of classification;
- Assessment of the situation and response as necessary, which may include escalating to a higher classification if conditions warrant; and
- The performance of closeout, when the event is terminated, over communication links to off-site authorities participating in the response (e.g., USNRC, state, county), followed by formal transmission of a state/local notification form within 24 hrs.

4.2 Alert

An alert is described as follows by the USNRC:

> "Event(s) are in progress or have occurred which indicate an actual or potential substantial degradation of the level of safety of the plant. Any releases are expected to be limited to small fractions of USEPA Protective Action Guide exposure levels" (USNRC, 1980).

The purpose of this classification is to ensure that emergency response personnel are readily available and will provide off-site authorities with current status information. An alert will be classified as the initiating event or as escalation from an unusual event. In either case, the classification will likely be made by the Shift Manager (Shift Emergency Director) prior to the transfer of command and control. Required actions at this classification will include the following:

- Notifications to facility management and the NDO;
- Notification, within 15 minutes, to the state and local communities. The EOF will assume state update responsibilities;
- Activation of the TSC, OSC, EOF, and JPIC organizations;
- Transfer of command and control;
- Notification to the USNRC as soon as possible, but within 60 minutes of classification;
- Notification to the INPO and ANI;
- Assessment of the situation and response as necessary, which may include escalating to a higher classification if conditions warrant;
- Dispatch of on-site and off-site field monitoring teams; these teams will be sent to staging areas or will be dispatched to monitor for releases of radiation to the environment;
- The provision of periodic updates, including meteorological and radiological data, to keep off-site authorities informed of plant status; and
- When the event is terminated, notification will be performed over communication links followed by an initial incident report to off-site authorities participating in the response (e.g., USNRC, state, county) within 8 hrs.

4.3 Site Area Emergency

A site area emergency is described follows by the USNRC:

> "Event(s) are in progress that involve actual or likely major failures of plant functions needed for protection of the public. Any releases are not expected to exceed USEPA Protective Action Guide exposure levels except near the site boundary" (USNRC, 1980).

The purpose of this classification, in addition to those of the alert level, is to ensure that the emergency response centers will be manned and provisions will be made for information updates to the public through off-site authorities and the news media. A site area emergency will likely be classified by the Station Emergency Director following activation of the TSC (see Section 3.3.5.1). Required actions at this classification will include the following:

- Notification to facility management and the NDO;
- Notification, within 15 minutes, of the state and local communities. The EOF will assume state update responsibilities;
- Activation of the TSC, OSC, EOF, and JPIC organizations;
- Transfer of command and control;
- Notification to the USNRC as soon as possible, but within 60 minutes of classification;
- Notification to the INPO and ANI;
- The performance of assembly/accountability, if not previously performed, at the affected facility, and the initiation of evacuation of non-essential personnel;
- Dispatch of on-site and off-site field monitoring teams; these teams will be sent to staging areas or will be dispatched to monitor for releases of radiation to the environment;
- Assessment of the situation and response as necessary; this includes escalating to a higher classification if conditions warrant;
- The provision of periodic updates, including meteorological and radiological data, and projected or actual doses for any releases which have occurred, to keep off-site authorities informed of plant status; and
- When the event is terminated, notification will be performed over communication links followed by an initial incident report to off-site authorities participating in the response (e.g., USNRC, state, county) within 8 hrs.

4.4 General Emergency

A general emergency is described follows by the USNRC:

> "Event(s) are in progress or have occurred which involve actual or imminent substantial core degradation or melting with potential for loss of containment integrity. Releases can be reasonably expected to exceed USEPA Protective Action Guide exposure levels off site for more than the immediate site area" (USNRC, 1980).

The purpose of this classification, in addition to those of the site area emergency level, is to initiate predetermined protective actions for the public and provide continuous assessment of information from monitoring groups. A general emergency will likely be classified by the Station Emergency Director following activation of the TSC. Required actions at this classification will include the following:

- Notifications to facility management and the NDO;
- Notification, within 15 minutes, to the state and local communities. The EOF will assume state update responsibilities;
- Activation of the TSC, OSC, EOF, and JPIC organizations;
- Transfer of command and control;
- Notification to the USNRC as soon as possible, but within 60 minutes of classification;
- Notification to the INPO and ANI;
- Determination of a PAR;
- The performance of assembly/accountability, if not previously performed, at the affected facility and the initiation of evacuation of non-essential personnel;
- The dispatch of on-site and off-site monitoring teams; these teams will be sent to staging areas or dispatched to monitor for releases of radiation to the environment;
- Assessment of the situation and response as necessary;
- The provision of periodic updates, including meteorological and radiological data, and projected or actual doses for any releases that have occurred, to keep off-site authorities informed of plant status; and
- When the event is terminated, notification will be performed over communication links followed by an initial incident report to off-site authorities participating in the response (e.g., USNRC, state, county) within 8 hrs.

4.5 Recovery

Recovery refers to that period when the emergency phase is over and activities are being taken to return the situation to a normal state (acceptable condition). In addition, it refers to when the plant is under control and no potential for further degradation to the plant or the environment is believed to exist. A recovery will be classified by the Station Emergency Director after obtaining authorization from the Corporate Emergency Director. Required actions at this classification will include the following:

- The State of Illinois and the USNRC should be consulted prior to entering into recovery;
- Notifications will be made to facility management, the NDO, state(s), and USNRC;
- A recovery organization will be established to manage repairs to return the unit to an acceptable condition and to support environmental monitoring activities as requested in coordination with federal and state efforts; and
- The INPO and the ANI will be notified of recovery classification.

More detailed recovery and re-entry plans are documented in Chapter 13.

4.6 Classification Downgrading

The Applicant's policy on classification downgrading is described below.

- An alert classification may be downgraded to an unusual event if conditions warrant.
- Site area emergencies shall not be downgraded to a lower classification. Once declared, a site area emergency shall remain in effect until a general emergency classification is warranted, or until such time as conditions warrant classification to recovery.
- General emergencies shall not be downgraded to a lower classification. Once declared, it shall remain in effect until such time as conditions warrant classification to recovery.

4.7 Guidance for Termination of an Emergency

The purpose of terminating an emergency is to provide an orderly turnover of plant control from the EROs to the normal EGC ESP Facility organization. Termination of the emergency will be authorized by the Emergency Director in command and control. The considerations that will be provided in the recovery/termination checklist in the future emergency implementing procedures will be performed prior to exiting the emergency event. Consultation with governmental agencies and other parties should be conducted prior to the termination of an event classified as site area emergency or general emergency. Notifications will be transmitted to appropriate agencies in order to terminate an event.

4.8 EGC ESP Facility Security Plan

There will be a security plan that complies with the requirements of 10 CFR 73. The interface between the EGC ESP Emergency Plan and the EGC ESP Facility Security Plan will be one of parallel operation, and the plans will be compatible. The Emergency Plan response measures, once initiated, will be executed in parallel with measures taken in accordance with the EGC ESP Facility Security Plan.

Threats made to the facility will be evaluated in accordance with established Applicant threat assessment procedures and the EGC ESP Facility Security Plan. The EGC ESP Facility Security Plan will identify situations that could be initiating conditions for EAL classifications (USNRC, 1980). Contingency events include bomb threats, attack threats, civil disturbances, protected area intrusions, loss of guard/post-contact, vital area intrusions, bomb devices discovered, loss of guard force, hostages, extortion, fire/explosions, internal disturbances, security communications failure, and obvious attempts of tampering. The EGC ESP Facility Security Plan will contain guidance for decisions and actions to be taken for each security contingency event. As guidance, the security plan will allow for differing responses depending upon the assessment of the actual situation within each contingency event classification.

All identified security contingency events will have the potential of being assessed as initiating conditions for a radiological emergency declaration. The assessment of any security contingency event, and the decision to initiate or to not initiate the Emergency Plan, will be the responsibility of the Shift or Station Emergency Director.

Determination of a credible security threat may require the staffing of emergency response facilities based on the classification of an Unusual Event per the Emergency Action Levels (EALs).

4.9 Emergency Action Levels

Emergency classifications will be characterized by EALs. The threshold values will be referenced whenever an initiating condition is reached. An initiating condition is one of a predetermined subset of unit conditions where either the potential exists for a radiological emergency, or such an emergency has occurred. Defined in this manner, an initiating condition is an emergency condition, which sets it apart from the broad class of conditions that may or may not have the potential to escalate into a radiological emergency. Initiating conditions are arranged in one of the recognition categories.

The Final Emergency Plan, to be submitted in association with the COL application, will contain risk-based, site-specific EALs as applicable to the facility design selected. These EALs will be consistent with the general class descriptions as provided in industry guidance documentation (NUMARC, 1994), and in accordance with Regulatory Guide 1.101, *Emergency Planning and Preparedness for Nuclear Power Reactors* (USNRC, 1992). Where possible, these EALs will be related to plant instrumentation readings.

EALs are for unplanned events. A planned evolution involves preplanning to address the limitations imposed by the condition, the performance of required surveillance testing, and the implementation of specific controls prior to knowingly entering the condition. Planned evolutions to test, manipulate, repair, perform maintenance or modifications to systems and equipment that result in an EAL Threshold Value being met or exceeded are not subject to classification and activation requirements as long as the evolution proceeds as planned. However, these conditions may be subject to the reporting requirements of 10 CFR 50.72.

4.10 Relationship to Off-Site Classification Systems and Procedures

4.10.1 Off-Site Classification Systems

The Applicant will work with the State of Illinois to maintain consistency between classification schemes. At the appropriate time that the attributes of this plan need to be in effect, the content of the EALs will be reviewed with the state and county authorities on an annual basis. Concurrence will be obtained from state and county authorities for EAL changes that significantly impact the initiating conditions or technical bases.

4.10.2 Off-Site Emergency Procedures

At the appropriate time that the attributes of this plan need to be in effect, the Applicant will assist the State of Illinois and county authorities in their efforts to prepare the needed procedures that provide for emergency actions to be taken that are consistent with the protective actions recommended by the Applicant.

CHAPTER 5

Notification Methods and Procedures

This chapter describes the notification of state and county response organizations and EGC emergency response personnel, and outlines the content of initial and follow-up messages to response organizations within the plume exposure pathway EPZ, in the following sections:

- Bases for Emergency Response Organization Notification (Section 5.1)
- Notification and Mobilization of Emergency Response Personnel (Section 5.2)
- Initial Notification (Section 5.3)
- Follow-Up Messages (Section 5.4)
- State and County Information Dissemination (Section 5.5).

The information in this chapter is based on and consistent with the *Exelon Nuclear Standardized Radiological Emergency Plan* (EGC, 2003).

5.1 Bases for Emergency Response Organization Notification

The Applicant, in cooperation with the State of Illinois and county authorities, has established mutually agreeable methods and procedures for the notification to off-site response organizations consistent with the emergency classification and action level scheme. These methods and procedures apply to the CPS and other Applicant facilities within the State of Illinois. Notifications to off-site agencies include a means of verification or authentication such as the use of dedicated communication networks, verification code words, or providing call back verification phone numbers. The EGC ESP Facility will establish similar procedures with the State and county authorities at the appropriate time.

5.1.1 Notification/Classification for Dual Unit Emergencies

When the classification involves more than one unit of a multi-facility property or site (i.e., tornado or earthquake), the classification shall be reported as affecting both units. In situations when all units of a multi-facility property or site are affected by emergency events, but the events are not related or the classification for each unit is different, notification will be made for the highest classification. Clarification of the relationship between the classification levels determined for the units should be provided in the periodic state updates and the USNRC event notification worksheet. In situations when one unit is affected by unrelated events, notification will be made for the highest classification via the state/local notification, and the second event information provided in the periodic state updates.

5.1.2 Notification for Transportation Accidents

If a transportation accident involving radioactive or other hazardous materials as defined by 49 CFR 171.15 or 49 CFR 171.16 occurs, the Applicant will notify the appropriate off-site agencies, including, for example, the National Response Center, appropriate state agency, USNRC, ANI, INPO, and USDOT (49 CFR 171). The Applicant will maintain a list of the appropriate off-site agencies.

5.2 Notification and Mobilization of Emergency Response Personnel

Emergency implementing procedures will be established for notification and mobilization of the following emergency response personnel. Communication systems are described in Chapter 6.

5.2.1 On-Site

When an emergency is declared, reclassified, or terminated, an announcement will be made over the plant public address (PA) system or by other means. If the EGC ESP Facility is a dual unit, the unaffected unit control room will be notified of the emergency declaration or change. The CPS control room will be notified of the emergency declaration or change. These notifications will include the declaration of the emergency classification and response actions that are to be taken by site personnel.

At the unusual event classification, select ERO augmentation personnel will be notified and requested to remain available to respond. At an alert classification or higher, ERO augmentation personnel will be notified for activation of the TSC, OSC, EOF, and JPIC using the ERO notification system, or by using a system of pagers and/or call trees via commercial telephone as backup.

5.2.2 Off-Site

When an emergency is declared, reclassified, or terminated, notifications will be promptly made to first-line off-site EROs. These first-line notification contacts are described below:

- The notification of cognizant off-site government agencies shall be made within 15 minutes of an initial emergency classification, classification escalation, issuance of or change to a PAR for the general public or changes in radiological release status which occur outside of an event classification or PAR notification, based on previous agreement with the State of Illinois. The emergency warning points will be simultaneously notified using the NARS, as discussed in Section 6.1.1, or a commercial telephone line as backup. A notification will also be initiated to cognizant State/Local government agencies as soon as possible but within one hour of the de-escalation or termination of an event classification, or entry into recovery.
- The event will be reported to the USNRC operations center immediately after notification to the appropriate state or local agencies, but not later than 1 hr after the time of initial classification, escalation, termination, or entry into recovery phase. The USNRC will be notified by a dedicated telephone system called the ENS, as discussed in Section 6.3. If the ENS is inoperative, the required notifications will be made via commercial telephone service, other dedicated telephone service, or any other method that will ensure that a report is made as soon as practical. An USNRC event notification worksheet should be utilized to transmit initial information to the USNRC. If a continuous communication is requested and established, a log will be used in lieu of the ENS worksheet.

Specific requirements for the notifications to the USNRC for classified emergency events are detailed in 10 CFR 50.72. The computerized data link to USNRC, ERDS, will be initiated within one hour of the declaration of an alert classification or higher.

Mobilization of federal, state, and county response organizations will be performed in accordance with their applicable Emergency Plan and procedures. At a minimum, mobilization of federal response organizations and activation of state and county EOCs will be expected to occur at the declaration of a site area emergency (State of Illinois, 2001 and 2003).

The state and county authorities will be responsible for the process of notification to the general public (State of Illinois, 2001 and 2003).

5.2.3 Support Organizations

When an emergency is initially classified, escalated, or terminated, notifications will be promptly made to support organizations as follows:

- Medical, rescue, and fire fighting support services will be notified for assistance as the situation dictates.
- The INPO will be notified at an alert or higher classification with requests for assistance as necessary.
- The ANI will be notified at an alert or higher classification with requests for assistance as necessary.
- Vendor and contractor support services are notified for assistance as the situation dictates.

5.3 Initial Notification

The Applicant, in conjunction with state and county authorities, has established the contents of the initial notification message transmitted during a classified emergency. These methods and procedures apply to the CPS, other Applicant facilities within the State of Illinois, and will apply to the EGC ESP Facility.

At a minimum, the contents of the form will include the following:

- Designation ("This is a Drill" or "Actual Event");
- Identity of the site;
- Event classification;
- EAL number, (as previously agreed upon with Illinois authorities);
- Non-technical event description, (as previously agreed upon with Illinois authorities);
- Date and time of declaration (or entry into recovery or termination);
- Whether a release is taking place ("release" means a radiological release attributable to the emergency event);
- Wind direction and speed;
- Whether off-site protective measures may be necessary; and
- Potentially affected subareas (or sectors as applicable) when a general emergency is declared.

The date and time when the notification was transmitted, as well as the off-site agencies contacted, will be recorded either on the notification form or in an event logbook.

5.4 Follow-Up Messages

For all emergency classifications, update messages to state authorities will be provided at the time of the notification on a prearranged frequency. The facility in command and control will be responsible for ensuring that the updates are completed. State updates will contain the prearranged information plus any additional information requested at the time of the notification.

Additional follow-up notifications will be also provided to the USNRC operations center as soon as possible but not later than 1 hr after significant new information is available involving:

- The results of evaluations or assessments of plant conditions;
- The effectiveness of response or protective measures taken; and/or
- Information related to plant behavior that is not understood.

If requested by the USNRC, an open, continuous, communications channel will be maintained with the USNRC operations center over the HPN or ENS circuits.

5.5 State and County Information Dissemination

The State of Illinois and county emergency response plans describe procedures for how state and county officials should make a public notification decision promptly (within about 15 minutes) once they have been informed by the plant of an emergency. Currently (2003), the system for disseminating information to the public includes a notification by prescripted messages through appropriate broadcast media such as the emergency alert system (EAS). The sections below describe dissemination systems that are already in service and will be used in future for the EGC ESP Facility.

5.5.1 Notification to the Public

The capability exists for the prompt notification of the general public within the CPS plume exposure pathway EPZ. The EGC ESP Facility will use the same system.

This notification capability consists of two principal elements: (1) the alert and notification systems (ANS) and (2) the EAS radio station.

- The ANS consists of fixed sirens and vehicles with PA systems. Activation of the ANS sirens by the civil authorities will alert the public to turn on their radios to a local EAS radio station for detailed information on the emergency situation.
- The EAS is a network of local radio station prepared to transmit or relay emergency information and instructions from the civil authorities to the general public.

The ANS is operated by local governmental agencies and is maintained by the Applicant. To assure the ANS is maintained in an operational readiness posture, the local agencies have agreed to test the system (by sounding the sirens) on a periodic basis that meets or exceeds FEMA guidance. In addition, local agencies have agreed to report inoperable equipment to emergency plan designated maintenance personnel. The goal of the testing and maintenance program is to identify inoperable equipment in a timely manner and to restore equipment to a functional status commensurate with FEMA operability requirements as referenced in the "Guide for the Evaluation of Alert and Notification Systems for Nuclear Power Plants" (FEMA-REP-10, 1985). In addition to this routine test and repair program, preventive maintenance of the ANS will be performed on an annual basis.

The activation of the ANS sirens, deployment of emergency service vehicles and operation of the EAS is discussed in detail in the State of Illinois Plan (State of Illinois, 2001).

5.5.2 Messages to the Public

The State of Illinois has developed EAS messages for the public consistent with the classification scheme. These draft messages are included as part of the State of Illinois Plan and contain instructions with regard to specific protective actions to be taken by occupants and visitors of affected areas (State of Illinois, 2001). Messages may include instructions such as: take shelter and go indoors, close windows and doors, turn off ventilation systems; directions given for evacuation; directions to stay tuned to specific stations for further information, and ad hoc respiratory protection (e.g., handkerchief over mouth). The EGC

ESP Facility will provide support for the content of these messages when requested. The State of Illinois controls the distribution of radioprotective drugs to the general public.

CHAPTER 6

Emergency Communications

This chapter describes the provisions utilized for prompt communications among principal EROs, communications within the EROs, and communications with the general public. This information is presented in the following sections:

- Communications/Notifications (Section 6.1)
- Emergency Response Organization Notification (Section 6.2)
- USNRC Communications (Emergency Notification System and Health Physics Network) (Section 6.3)
- Medical Communications (Section 6.4).

The information in the chapter is based on and consistent with the *Exelon Nuclear Standardized Radiological Emergency Plan* (EGC, 2003).

6.1 Communications/Notifications

The Applicant currently (2003) has extensive and reliable communication systems installed at its generating stations and corporate headquarters. These systems or their equivalent will be duplicated at the EGC ESP Facility in preparation for receipt of an operating license. The Applicant expects that the equipment specified in this section will likely be improved and upgraded over time. Nonetheless, the functional capability of the equipment discussed in this section will remain consistent. Examples of the communications network include systems such as normal and dedicated telephone lines on landlines, microwave and fiber-optic voice channels, cell phones, satellite phones, mobile radio units, handi-talkies, and computer peripherals. For the EGC ESP Facility, this network will provide the following:

- Voice communication through a normal telephone, dedicated line and automatic ring-down between selected facilities, conference call capability, speaker phones, and operator assistance where required;
- Communications between selected EGC vehicles and appropriate fixed locations, as well as with state mobile units and fixed locations; and
- Facsimile, network, and modem transmission.

Figure 6.1-1 depicts the initial notification paths and the organizational titles from the Applicant's ERFs to federal, state, and local EROs, and industry support agencies. The Applicant's primary and alternate methods of communication, and the USNRC communications network are illustrated in Figure 6.1-2 and Figure 6.1-3.

For the EGC ESP Facility, the Applicant will maintain the capability to make initial notifications to the designated off-site agencies on a 24-hr per day basis. The off-site notification system, referred to as the NARS, will provide communications to state and county warning points and EOC from the CR, TSC, and EOF. Backup methods will include facsimile and commercial telephone lines. State and county warning points will be continuously staffed (State of Illinois, 2001 and 2003).

The Applicant has established several dedicated communication systems that will ensure reliable and timely exchange of information necessary to provide effective command and control over any emergency response. This includes information (1) between EGC and state and local agencies within the EPZs; (2) with federal EROs; (3) between the plant, the EOF, and the state and county EOCs; and (4) between ERFs and field monitoring teams.

In addition, facility communication links will exist to ensure appropriate information transfer capabilities during an emergency. The facility may also utilize PA systems, facility radios, and pagers to augment its emergency communications.

6.1.1 Nuclear Accident Reporting System

The NARS is a dedicated communications system that will be installed at the EGC ESP Facility prior to receipt of an operating license for the purpose of notifying state and local authorities of declared nuclear emergencies. This system will link together the facility CR, EOF, TSCs, state, and local authorities as appropriate.

6.1.2 Damage Control Line

A dedicated telephone link called the damage control line will enable communication between the CR, the TSC, and the OSC in order to coordinate the dispatching of emergency damage control teams from the OSC (See A in Figure 6.1-2).

6.1.3 Operations Status Line

A dedicated telephone link called the operations status line will enable communication between the CR, TSC, and EOF in order to monitor the activities of the CR staff (see C in Figure 6.1-2).

6.1.4 Technical Conference Line

A dedicated telephone line called the technical conference line between the TSC and the EOF will enable communication to help manage activities and priorities for the EGC ESP Facility (see D in Figure 6.1-2).

6.1.5 Director's Hotline

A dedicated telephone link called the Director's Hotline will enable direct communication between the Emergency Director and the CR, TSC, and EOF (see B in Figure 6.1-2).

6.1.6 Private Branch Exchange Telephone System

The private branch exchange (PBX) telephone system will provide communication capability between telephones located within the plant by dialing a facility code. The PBX will be used to connect the CR, TSC, EOF, and OSC. The PBX telephone system will also provide for outside communications through interconnections with the corporate telephone communications system and commercial telephone lines (see E in Figure 6.1-2).

6.1.7 Local Commercial Telephone System

This system will provide standard commercial telephone service through the public infrastructure, consisting of central offices, the wire line, and the microwave carrier. The commercial telephone system will include connections to PBX, the emergency telephone system, dedicated lines to emergency facilities, and lines to the JPICs. The commercial vendor will provide primary and secondary power for their lines at their central office.

6.1.8 Emergency Response Data System

The ERDS will supply the USNRC with selected plant data points on a near real time basis. The ERDS is activated by the ERO as soon as possible, but not later than 1 hr after declaration of an alert, a site area emergency, or a general emergency. The selected data points will be transmitted via modem to the USNRC at approximately 1-minute intervals.

6.1.9 Field Monitoring Team Communications

A separate communications system will be installed to allow coordinated environmental monitoring and assessment during an emergency. This system will consist of the necessary hardware to allow communication between the CR, TSC, EOF, and mobile units in the

Applicant's vehicles. Commercial cell phones, or other means, will be available as backup to the primary field team communications system.

6.2 Emergency Response Organization Notification

The Shift Manager will be responsible for initiating a callout to activate the ERO (see Section 3.3.5.1.1). The call-out process, to be documented in the Emergency Plan implementing procedures that will be completed prior to initial fuel loading, will identify individuals who are capable of fulfilling the specific response functions that are listed in Table 3.2-1 and Table 3.3-1. These tables were developed based on the functions listed in NUREG-0654, Table B-1 (USNRC, 1980).

The Applicant will utilize an automated ERO notification system to rapidly notify members of the ERO. The system, in use at the CPS and planned for use at the EGC ESP facility, consists of a computer with modem equipment capable of initiating and receiving telephone calls. When contact is made, the system automatically will request security identification and then respond. One of the calls made by the system will be to the paging system vendor. The pager vendor's system will accept group and individual numbers from the ERO notification system, activating several radio transmitters that, in turn, activate personal pagers belonging to members of the ERO. The system will incorporate redundant power, phone and computer components with geographic separation. Implementing procedures will specify the course of action to be taken if the ERO notification system fails. This will require facility personnel to manually activate the ERO group page feature and/or directly call-out key emergency response personnel.

6.3 USNRC Communications (Emergency Notification System and Health Physics Network)

Dedicated telephone equipment will be installed between the EGC ESP Facility's CR and the USNRC, with an extension of that line in the TSC. In the EOF, a separate line with the capability of being patched into the facility through the USNRC will be available. This line will be used for USNRC event notifications and status updates.

There will also be a separate dedicated telephone, HPN, for use between the USNRC, TSC, and EOF for conveying health physics information to the USNRC as requested or as an open line. Installation and the use of USNRC telephones will be under the direction of the USNRC, as indicated in Figure 6.1-3 (USNRC, 1980 and 1978).

6.4 Medical Communications

Communications will be established with the primary and backup medical hospitals (see Section 12.1), and transportation services via commercial telephone that will be accessed by facility personnel.

Figure 6.1-1
Applicant Notification Scheme (For Full Augmentation)

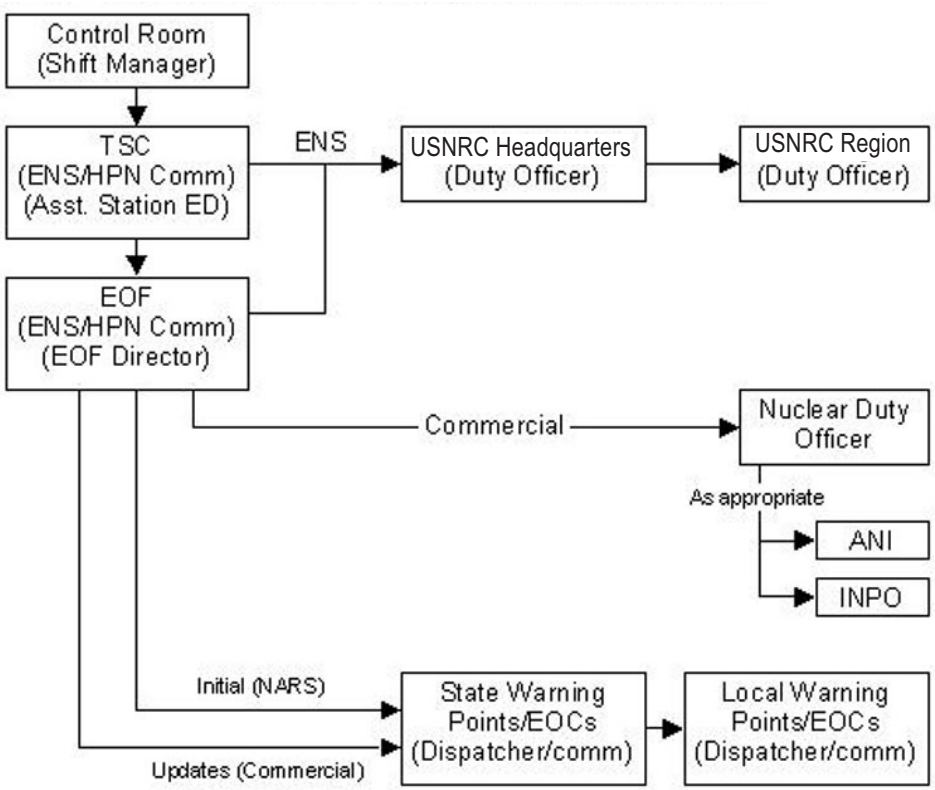

Data Source:
EGC, 2003

Not to Scale

Figure 6.1-2
ERF Communications Matrix

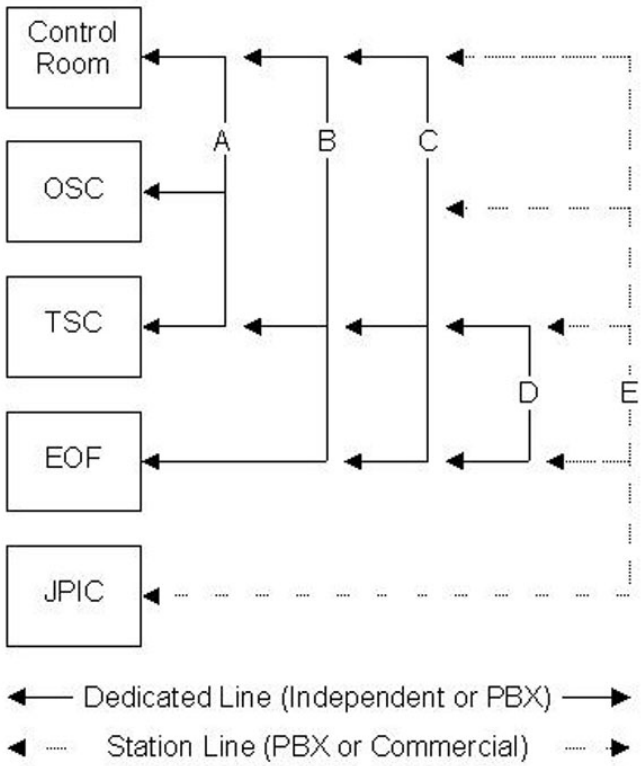

Data Source:
EGC, 2003

Not to Scale

Figure 6.1-3
USNRC Communications for Nuclear Response

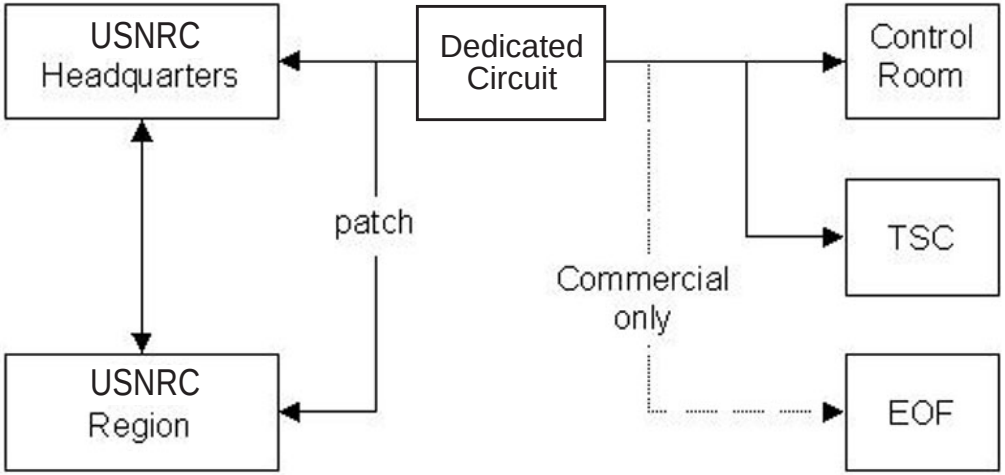

Data Source:
EGC, 2003

Not to Scale

CHAPTER 7

Public Education and Information

The Applicant's Public Education and Information program is in place for other Applicant facilities and will be implemented in a similar or consistent manner for the EGC ESP Facility in association with initial fuel loading. This chapter describes the Applicant's Public Education and Information Program, outlines the methods for distributing public information materials on an annual basis, and describes how the public will be informed in the event of an emergency, in the following sections:

- Public Information Publication (Section 7.1)
- Public Education Materials (Section 7.2)
- Media Accommodations (Section 7.3)
- Coordination of Public Information (Section 7.4)
- Media Orientation (Section 7.5).

The information in the chapter is based on and consistent with the *Exelon Nuclear Standardized Radiological Emergency Plan* (EGC, 2003).

7.1 Public Information Publication

The state has an overall responsibility for maintaining a continuing disaster preparedness public education program (State of Illinois, 2001). The emergency public information publication for the Applicant's generating facilities is and will be updated annually, in coordination with state and county agencies, to address how the general public is notified and what their actions should be in an emergency. The Applicant will distribute the EGC ESP Site-Specific publication on an annual basis by mail to residents within the 10-mi plume exposure pathway EPZs and to appropriate locations where the transient population may obtain a copy. The public information publication will include the following information:

- Educational information on radiation;
- A description of the events which require public notification and what to do if a take-shelter or evacuate recommendation is given;
- A map of major evacuation routes;
- A list of communities likely to serve as host shelter areas, and instructions on how to obtain additional information, especially for the disabled or their caretakers and those without transportation; and
- An address, telephone number, and email address to contact for additional information.

7.2 Public Education Materials

Public information publications will instruct the public to go indoors and turn on their radios when they hear the ANS sirens operating. These publications will also identify the local radio stations that the public should listen to for information related to the emergency.

7.3 Media Accommodations

The Applicant's Communications and Public Affairs Department will be notified when an unusual event or higher emergency condition exists. They will handle public and media inquiries in the early stages of the event (until the JPIC is activated) by distributing background information, news releases, and providing information to corporate management.

7.3.1 The Emergency Public Information Organization

The emergency public information organization will be part of the Corporate ERO (see Section 3.3.5.3). It may be activated at any time at the discretion of the NDO. However, when there is a procedural requirement to activate the EOF, the emergency public information organization will also be activated.

The primary purpose of the emergency public information organization will be to disseminate information from the Applicant's ERO about the emergency events to the public via the news media. However, the authority for issuance of news releases for the classification of an unusual event or prior to ERO activation will always reside with the Applicant's Communications and Public Affairs Department. Upon activation, the emergency public information organization will have the responsibility and authority for issuance of news releases to the public.

The emergency public information organization will be comprised of senior managers from the Applicant's organization who will function as spokespersons, and other individuals, including personnel from the governmental affairs and human relations areas. The Applicant's spokespersons will disseminate information to the news media/public concerning the emergency events out of the JPIC.

7.3.2 The Joint Public Information Center

The JPIC will be the facility in which media personnel gather to receive information related to the emergency event. The JPIC will be the location where approved news releases will be provided to the media for dissemination to the public. News releases will be coordinated between the EOF and JPIC personnel and state and/or federal representatives in the JPIC. The Applicant's public information personnel will operate from the EOF and the JPIC, which will be under the direction of the Corporate Spokesperson and function as the single point contact to interface with federal, state, and local authorities who are responsible for disseminating information to the public. The EGC ESP Facility and the CPS will share a common JPIC. However, for the purposes of this Emergency Plan, the JPIC is described in terms of its future use at the EGC ESP Facility.

The JPIC will be equipped with appropriate seating, lighting, and visual aids to allow for public announcements and briefings to be given to the news media. Additionally, the JPIC will be equipped with commercial telephone lines for making outgoing calls. The emergency public information organization will function from the JPIC and EOF in preparing and releasing utility information about the emergency event. The JPIC will be activated at the declaration of an alert or higher classification. The JPIC functions will be as follows:

- Serve as the primary location for accumulating accurate and current information regarding the emergency conditions and writing news releases;
- Provide work space and phones for public information personnel from the state, counties, USNRC, FEMA, and industry-related organizations;
- Provide telephones for use by the news media personnel; and
- Provide responses to media inquiries through the Media Monitoring Staff, who staffs telephones so that the media can call for information about an emergency.

7.4 Coordination of Public Information

The JPIC will be staffed by Applicant and government public information representatives who will be the source of public information during an emergency at the facility. The Corporate Spokesperson will be the primary spokesperson for the Applicant. The Corporate Spokesperson will have direct access to the necessary information (see Section 3.3.5.3.1).

The JPIC will be staffed by federal, state, county, and utility personnel to assure timely, periodic exchange, and coordination of information. In addition, representatives will coordinate information prior to conducting news briefings.

Rumors or misinformation will be identified during an emergency by the media/rumor control monitors. They will respond to public and news media calls and will monitor media reports.

7.5 Media Orientation

The Applicant's Mid-West Regional Operating Group (MWROG) Emergency Preparedness Department, in conjunction with the Communications and Public Affairs Department, will annually provide the applicable news media with information concerning the emergency plan, radiation, and points of contact for release of public information in an emergency.

CHAPTER 8

Emergency Facilities and Equipment

This chapter describes the emergency facilities and equipment that will be used by the ERO, and outlines the requirements that aid in timely and accurate response actions, in the following sections:

- Control Room, Technical Support Center, and Operations Support Center (Section 8.1)
- Emergency Operations Facility (Section 8.2)
- Emergency Operations Centers(Section 8.3)
- Activation (Section 8.4).

The facilities and equipment will be installed and evaluated in association with activities prior to initial fuel loading. The information in this chapter is based on and consistent with the *Exelon Nuclear Standardized Radiological Emergency Plan* (EGC, 2003).

8.1 Control Room, Technical Support Center, and Operations Support Center

On-site and off-site facilities will be available for emergency assessment, communications, first aid and medical care, and damage control. Of particular importance will be the CR, TSC, OSC, EOF, and JPIC (USNRC, 1980 and 1981).

The Applicant will establish a TSC and an on-site OSC. The TSC and OSC will be activated upon declaration of an alert or higher classification. Until they become operational, required functions of these facilities will be performed in the EGC ESP Facility CR.

8.1.1 EGC ESP Facility Control Room

The CR will be the centralized on-site location from which the nuclear facility's reactor and major plant systems are operated. The CR will be equipped with instrumentation to supply detailed information on the reactor and major plant systems. The CR will be continuously staffed with qualified licensed operators, and will be the first on-site facility to become involved with the response to emergency events. CR personnel must evaluate and effect control over the emergency and initiate activities necessary for coping with the emergency until such time that support centers can be activated. These activities shall include the following:

- Reactor and plant control;
- Initial direction of all plant-related operations;
- Accident recognition, classification, mitigation, and initial corrective actions;
- On-site personnel alerts;
- Notification of appropriate individuals and activation of ERDS;
- Activation of ERFs and ERO notification;
- Notification of off-site agencies;
- Continuous evaluations of the magnitude and potential consequences of an incident;
- Initial dose projections; and
- Recommendations for immediate protective actions for the public.

As other ERFs become activated, they will supply support to the CR, although overall command and control of the emergency will transfer to the TSC or EOF. Throughout emergencies, the CR will maintain its emergency activation status until its normal operational status may be resumed.

8.1.2 Technical Support Center

A TSC will be established for use during emergency situations by facility management, technical, and engineering support personnel. The TSC will be activated for emergencies

classified as an alert or higher. Activation for other events will be optional. When activated, the TSC functions will include the following:

- Support the CR's emergency response;
- Perform the non-delegable functions when in command and control;
- Continual evaluation of event classification;
- Assess the plant status and potential off-site impact;
- Coordinate emergency response actions;
- Notify appropriate corporate and station management; and
- Provide notification and update information to the USNRC via the ENS, including activation of ERDS.

The TSC will be the on-site location utilized to support the CR for assessment of plant status and potential off-site impact, and for implementation of emergency actions. The TSC will provide technical data and information to the EOF.

The TSC will provide reliable voice communications to the CR, OSC, EOF, USNRC, and state and local EOCs. In addition, they will provide facsimile transmissions capability (see Chapter 6).

The TSC will be sized for a minimum of 25 spaces and supporting equipment. Of the 25 spaces, five will be reserved for the USNRC, and adequate space will be available for the appropriate state representative(s).

Under accident conditions, personnel in the TSC will be protected from radiological hazards, including direct radiation and airborne contaminants, with similar radiological habitability as the CR personnel. To ensure adequate radiological protection, permanent radiation monitoring systems will be installed in the TSC, and/or periodic radiation surveys will be conducted. These systems will be used to indicate radiation dose rates and airborne radioactivity inside the TSC. In addition, protective breathing apparatus (full-face air purifying respirators) and KI will be available for use as required.

The TSC will have access to a complete set of as-built drawings and other records including general arrangement diagrams, piping and instrumentation drawings, and the electrical schematics. The TSC will have the capability to record and display vital plant data, in real time, to be used by knowledgeable individuals responsible for engineering and management support of reactor operations, and for implementation of emergency procedures.

8.1.3 Operations Support Center

The facility support personnel will report to the OSC, an on-site location used during an emergency. Assignments or duties will be dispatched in support of emergency operations. The OSC shall be activated whenever the TSC is activated, but the OSC need not remain activated at the alert level if the Station Emergency Director judges its use unnecessary. At the site area and general emergency levels, the OSC or an alternate OSC will be activated at

all times. Activation for other events will be optional. Station disciplines reporting to the OSC will include, but not be limited to, the following:

- Operating personnel not assigned to the CR;
- Radiation protection personnel;
- Chemistry personnel; and
- Maintenance personnel (mechanical, electrical, and I&C).

Table 3.3-1 and Figure 3.1-3 illustrate the staffing and organization for the OSC.

The OSC will be equipped with communication links to the CR, TSC, and EOF (see Chapter 6). A limited inventory of supplies will be kept in the OSC. This inventory will include respirators, protective clothing, flashlights, and portable survey instruments.

8.2 Emergency Operations Facility

The EOF will be the location where the Corporate Emergency Director will direct a staff in evaluating and coordinating the overall company activities involved with an emergency. Activation of the EOF is mandatory upon declaration of an alert or higher classification. The EOF will provide for the management of overall emergency response, the coordination of radiological and environmental assessments, the determination of recommended public protective actions, the management of recovery operations, and the coordination of emergency response activities with federal, state, and local agencies.

The common MWROG EOF is currently (2003) located in the Applicant's Cantera Facility, west of Chicago, in Warrenville, IL. The EOF was designed with the considerations described below.

- The location provides optimum functional and availability characteristics for carrying out overall strategic direction of the Applicant's on-site and support operations, determination of public protective actions to be recommended to off-site officials, and coordination with federal, state, and local organizations.
- It is well engineered and of sufficient size to accommodate about 50 people.
- It is equipped with reliable voice communications capabilities to the TSC, OSC, CR, USNRC, and state and local EOCs. In addition, the EOF has facsimile transmission capability.
- Equipment is provided to gather, store, and display data needed in the EOF to analyze and exchange information on plant conditions with the facility. The EOF technical data system receives, stores, processes, and displays information sufficient to perform assessments of the actual and potential on-site and off-site environmental consequences of an emergency condition.
- The EOF has (and will have for the EGC ESP Facility) ready access to plant records, procedures, and emergency plans needed for effective overall management of the Applicant’s emergency response resources.

8.3 Emergency Operations Centers

The EOCs operated by the state and local communities have been established to perform direction and control of emergency response functions.

The respective state EOCs are capable of continuous (24-hr) operations for a protracted period. These centers contain sufficient communication equipment (radio, telephone, and teletype), maps, emergency plans, and status boards to provide the necessary interfaces with other federal, state, county, and EGC emergency facilities.

The county EOCs serve as command and control headquarters for local emergency response activities as well as a center for the coordination of communications to field units and to the state EOC. These EOCs have the equipment necessary (such as facsimile machines, telecommunications equipment, radio gear, photocopiers, wall maps, etc.) to carry out their emergency responsibilities (State of Illinois, 2001 and 2003).

8.4 Activation

NOTE: NUREG-0654 Criterion II.B.5 states that the "licensee must be able to augment onshift capabilities within a short period after declaration of an emergency." It further defines that short period as 30 and 60 minutes. The time frames for rapid augmentation of a nuclear power plant staff in the event of an emergency are not rigid inviolate requirements but rather goals. It is the Applicant's intent to expend its best efforts to meet the augmentation criteria goals regarding staffing ERFs with sufficiently skilled individuals capable of handling an emergency. Both the NRC and the Applicant realize that due to diversity of normal residential patterns for the stations' staff, possible adverse weather conditions and road congestion, these time frames might be exceeded.

The Applicant has put into place plans and procedures to ensure the timely activation of its ERFs and will use similar plans and procedures for the EGC ESP Facility. Although the response time will vary due to factors such as weather and traffic conditions, a goal of 60 minutes for minimum staffing, following the declaration of an alert or higher emergency classification, has been established for the emergency facilities and the EOF. Additionally, plans will be developed to detail the timely functional activation and staffing of the JPIC when the classification of an alert is declared.

It is the goal of the organization to be capable of activating the applicable Emergency Response Facility within 15 minutes of achieving minimum staffing. The facility can be declared activated when the following conditions are met:

a. Minimum staffing has been achieved.

b. Personnel have been briefed on the situation.

c. The facility is functionally capable of performing the appropriate activity.

Although the minimum staffing criteria applies to the JPIC, the 60 minute response time and 75 minute activation time are not applicable. Public Information personnel must first coordinate the decision to activate the JPIC with the appropriate offsite authorities.

The facility directors may elect to activate their facility without meeting minimum staffing, if it has been determined that adequate personnel are available to support the emergency response.

CHAPTER 9

Accident Assessment

The accident assessment information in this chapter is presented in the following sections:

- On-Site Accident Assessment Capabilities (Section 9.1)
- Field Monitoring Teams (Section 9.2).

To effectively coordinate and direct the facets of the response to an emergency situation, diligent accident assessment efforts are required throughout the emergency. All four emergency classifications have similar assessment methods; however, each classification requires a greater magnitude of assessment effort, and will be dependent upon the plant symptoms and/or initiating event(s). The information in this chapter is based on and consistent with the *Exelon Nuclear Standardized Radiological Emergency Plan* (EGC, 2003).

9.1 On-Site Accident Assessment Capabilities

The resources available to provide initial values and continuing information for accident assessment throughout the course of an event will include the plant parameter display system (PPDS) or its equivalent, liquid and gaseous sampling systems, area and process radiation monitoring systems, and accident radiation monitoring systems (which include the high-range containment radiation monitors).

9.1.1 Accident Severity Determination

Accident severity determination will serve several roles within the EGC ESP Emergency Preparedness Program. For planning purposes, fission product barrier damage considerations will be used as the basis for several of the EAL initiating conditions and as the threshold for the declaration of a general emergency. The following descriptions of core damage estimating methods are examples based on light water reactor (LWR) concepts. Should a non-LWR design be selected for licensing, other fission product barrier degradation concepts will add to or replace these core damage estimating concepts.

From an implementation perspective, core damage estimations will provide a means of realistically differentiating between the four core states (no damage, clad failure, fuel melt, and vessel melt-through) to:

- Evaluate the status of the fuel barriers, and how their status relates to the risks and possible consequences of the accident;
- Provide input on core configuration (coolable or uncoolable) for prioritization of mitigating activities;
- Determine the potential quality (type) and/or quantity (percent) of source term available for release in support of projected off-site doses and PARs;
- Provide information that quantifies the severity of an accident in terms that can be readily understood and visualized; and
- Support the determination of radiological protective actions that should be considered for long-term recovery activities.

The assessment methodologies utilized by the Applicant are intended to provide a rapid best estimate of core damage that, when evaluated together, will help to develop an overall picture of the extent of core damage. For the EGC ESP Facility, a number of methods, described in the sections below, will be used to estimate the amount or type of core damage occurring under accident conditions. Application of these methods will depend on plant configuration. For non-LWR designs, analogous indications will be used.

9.1.1.1 Core Uncovery Time

An indirect method used to indicate the type of core damage (clad failure or fuel melt) is applicable for all types of accidents, provides a relatively accurate estimate of the state of the core early in the event, and is valid any time following an accident. This method is LWR specific and there will be no analog for non-LWR designs.

9.1.1.2 Core Exit Temperatures

An indirect method used to indicate the type of core damage is applicable for all types of accidents. These temperatures do not provide numerical estimations, but they are useful as a yes/no indicator or as confirmation of other methods. In addition, the method is valid any time following an accident. This method is LWR specific and there will be no analog for non-LWR designs. Instead, peak fuel temperatures will be estimated using reactor vessel or concrete structural temperature indications.

9.1.1.3 Containment and Main Steam Line Radiation Levels

This indirect method is used to determine the amount of core damage during loss-of-coolant accident (LOCA) scenarios. The method is based upon an end-of-life source term and static nuclide ratio assumptions and has a limited accuracy. The method is valid any time following an accident. The Containment Radiation Detector method will be applicable to both LWR and non-LWR designs; the Main Steam Line Radiation Detector method only to the LWR designs.

9.1.1.4 Containment Hydrogen Concentration

An indirect method that is used to establish the type of core damage during LOCA type accidents, where the hydrogen generated by the metal-water reaction is released into containment. This method is specific to LWR designs and is valid any time following an accident.

9.1.1.5 Sample Analysis

Coolant sample analyses methods are specific to LWR designs.

9.1.1.5.1 Isotopic Ratio Comparison

A direct method that is used to establish the type of core damage by comparing expected isotopic ratios with a sample to determine a general core state. This technique is applicable under all types of accidents, and is valid any time following an accident.

9.1.1.5.2 Presence of Abnormal Isotopes

A direct method that is used to provide a go/no-go indication of fuel melt by the presence of unusually high concentrations of the less volatile fission products. This method is applicable under all types of accidents, and valid any time following an accident.

9.1.1.5.3 Concentration Evaluation

A direct method that yields the most accurate numerical estimations of the amount of core damage. This method is applicable for all types of accidents, but it requires that the sampled system(s) be in a steady state. This usually prevents its use until the plant is in a stable condition.

9.1.2 Effluent Monitor Data and Dose Projection

Dose assessment or projection represents the calculation of an accumulated dose at some time in the future if current or projected conditions continue. During an accident, the PPDS (or equivalent) and personal computers will provide the ERO with the timely information required to make decisions. Radiological and meteorological instrumentation readings will be used to project dose rates at predetermined distances from the facility, and also to

determine the integrated dose received. The dose assessment methods, described in the following sections, are based on LWR design concepts and will be used by EGC ESP Site personnel to project off-site doses. If a non-LWR design is selected for the ESP Facility, appropriate monitoring and dose projection methods will be selected by the Applicant.

9.1.2.1 Monitored Release Points

This method will utilize the EGC ESP Facility's effluent radiation monitors and system flow rates. Effluent release points will be used to directly calculate a release rate. The point of the release determines the way the source term is affected and is adjusted by the dose assessment process.

9.1.2.2 Containment Leakage/Failure

This method will use a variety of containment failures or leak rates in conjunction with available source term estimations to develop a release rate to the environment. A direct vent of containment can be modeled as a failure to isolate.

9.1.2.3 Release Point Samples

This method will use a sample at the release point and an estimated flow rate to develop a release rate at the point of release.

9.1.2.4 Field Monitoring Team Data

This method will use a field survey or sample and the atmospheric model to back-calculate release rate and ratio concentrations of radioactive material at various points up and downwind of plume centerline.

9.1.2.5 Dose Projection to Determine Protective Action Recommendations

The computer applications used to provide dose calculations will be evaluated against the USEPA-400 plume exposure protective action guides (PAGs) applicable for the early phase of an accident. These evaluations place an emphasis on determining the necessity for off-site PARs. Dose assessment actions are performed in a two-step sequence.

9.1.2.5.1 Onset of a Release to One Hour Post-Accident

Shift personnel will rely on a simplified computerized dose model to assist them in developing off-site dose projections using real time data from effluent monitors and site meteorology.

9.1.2.5.2 One Hour Post-Accident to Event Termination

Estimates of off-site doses based on more sophisticated techniques will be provided. Dedicated ERO personnel will analyze the off-site consequences of a release using more complex computerized dose modeling. These additional methods are able to analyze more off-site conditions than the simplified quick method, as well as account for more specific source term considerations.

9.1.3 Meteorological Information

Local meteorological data will be available from an on-site meteorological tower. The data available will include wind speed, wind direction, temperature, and delta temperature.

This data will be used by the utility, state, and USNRC to provide near real-time predictions of the atmospheric effluent transport and diffusion. Meteorological data from the tower will be available in the CR, TSC, and EOF. Additionally, meteorological information can be acquired and utilized through the USNWS (see Section 3.1.1.1.7, Section 3.4.6, and Appendix A).

9.2 Field Monitoring Teams

The Applicant currently (2003) maintains the ability to take off-site air, soil, water, and vegetation samples, as well as to directly measure gamma dose rates, in the event of an airborne or liquid release. Environmental monitoring equipment contains portable survey, counting, air sampling instrumentation, and other radiological monitoring equipment and supplies to be used by the field monitoring teams. Samples are taken at predetermined locations as well as those specified both during and after a release. Environmental measurements are used as an aid in the determination and assessment of protective and recovery actions for the general public. These capabilities will be available at the EGC ESP Site prior to initial fuel loading.

In the event of airborne or liquid releases at the EGC ESP Site, field monitoring teams will be dispatched by the Applicant to perform a variety of functions during conditions that may involve significant releases of radioactive materials. Radiological survey and sample data will be used to define affected area boundaries, verify or modify dose projections and PARs, and assess the actual magnitude, extent, and significance of a liquid or gaseous release.

In addition to contamination and dose rate measurements, the change out of TLDs and air sampler cartridges can be performed. Other actions may include soil, water, and vegetation sampling.

The initial environmental surveys will involve simple-to-perform measurements to validate the dose projections based on plant parameters (see Section 9.1.2.4). Subsequent environmental monitoring efforts will be aimed at further defining the off-site consequences, including instituting an expanded program to enable prompt assessments of any subsequent releases from the plant. The expertise necessary to conduct limited off-site environmental surveying and sampling will be present on site 24 hrs a day.

A minimum of two off-site field monitoring teams will be notified and activated at an alert or higher classification (see Table 3.3-1). Teams composed of two individuals will be assembled at the EGC ESP Facility to test and inventory dedicated survey and sampling equipment. Teams will be dispatched in company vehicles into the surrounding area when a release occurs or is expected to occur. Radiological survey and sample data will be transmitted to the emergency facilities via portable communications equipment. Vendor/contractor support will be available to be used to perform collection, shipment and analysis of environmental sample media.

9.2.1 Iodine Monitoring

Field monitoring equipment will have the capability to detect and measure airborne radioiodine concentrations as low as 1E - 07 microcurie (μCi)/centimeter cubed (cc) in the presence of noble gases. Interference from the presence of noble gas and background radiation will be minimized by ensuring that monitoring teams move to areas of low background prior to analyzing the sample cartridge. The collected air sample will be measured by a hand-held survey meter as an initial check of the projection derived from plant data. This will determine whether significant quantities of elemental iodine have actually been released (the chemical form that would pose a health hazard).

9.2.2 Dose Estimates

Specific procedures exist for the correlation of air activity levels to the dose rate for key isotopes. Provisions have been established for estimating an integrated dose from the projected and actual dose rates, and for the comparison of these estimates with the PAGs (see Section 9.1.2.5).

9.2.3 State Monitoring Capabilities

The State of Illinois currently (2003) has the ability to dispatch their own field monitoring teams to track the airborne radioactive plume. The state also has the ability and resources to coordinate with federal and utility monitoring teams to compare sample results (State of Illinois, 2001).

CHAPTER 10

Protective Response

The protective response information in this chapter is presented in the following sections:

- Notification of On-Site Personnel (Section 10.1)
- Protective Action Recommendation (Section 10.2)
- Monitoring of Evacuees (Section 10.3).

Protective response consists of emergency actions, taken during or after an emergency situation, which are intended to minimize or eliminate hazards to the health and safety of the public and/or facility personnel. A range of protective actions has been developed for emergency workers and the general public in the plume exposure pathway EPZ. Additionally, guidelines have been established to aid in choosing protective actions during an emergency that are consistent with federal guidance. The information in this chapter is based on and consistent with the *Exelon Nuclear Standardized Radiological Emergency Plan* (EGC, 2003). The Applicant will be responsible for on-site actions, while the responsibility for off-site actions will belong to the state, county, and other off-site response agencies (State of Illinois, 2001).

10.1 Notification of On-Site Personnel

For all emergency classifications at the EGC ESP Site, all personnel within the protected area will be notified within 15 minutes of the initial classification or escalation of an emergency by recognizable alarms and/or verbal announcements over the plant PA system (see Section 5.2.1). Announcements will include the emergency classification and response actions to be taken by personnel on site, such as ERO, non-ERO, contractor personnel, and visitors. Provisions will be made to alert personnel in high noise areas and outbuildings within the protected area as applicable. Each facility will identify locations where people might be expected to be present outside the protected area but within the owner-controlled area. Accountability of persons within the owner controlled area, but outside the protected area, is not required. However, provisions will be established for notification of personnel within the owner-controlled area, including high noise areas and outbuildings within the Protected Area.

10.1.1 Evacuation Locations

If a site evacuation is required, non-essential personnel will be directed to either assemble at the designated assembly areas or immediately evacuate the site. Following assembly, personnel will be directed to either proceed to their homes or reassemble off site at designated relocation centers. Visitors to the facility will assemble with and follow the instructions of their escorts. Non-essential personnel within the protected area will normally exit through the security building. Personal transportation, if available, will normally be used, and established evacuation routes will be followed. Personnel without transportation will be identified and provided transportation as necessary.

10.1.2 Radiological Monitoring of Evacuees

Personnel evacuating the site will be monitored for contamination by the portal monitors as they exit the protected area, with portable friskers in the assembly areas, or sent to off-site monitoring locations on an as-needed basis.

10.1.3 Evacuation

Evacuation is the primary protective action anticipated for on-site personnel not having emergency response assignments. The EGC ESP Facility will choose locations to serve as on-site assembly areas for all personnel and off-site relocation centers for non-essential personnel when they are not instructed to proceed home. The specific locations of these areas are shown in Figure 2.2-1. Implementing procedures will describe equipment, supplies, and general operation of these facilities. Personnel known to be within the site boundary will be judged as essential or non-essential personnel by the Station Emergency Director. If conditions permit, evacuation of non-essential personnel will be conducted immediately after accountability if a site area emergency or general emergency has been declared. Evacuation routes are shown in Figure 2.2-1 and Figure 2.3-1. Evacuation will commence in accordance with future EGC ESP Facility procedures as directed by the Station Emergency Director or his/her designee, unless one of the following conditions exist (see Section 3.3.5.1.2):

- Severe weather conditions threaten safe transport;

- A significant radiological hazard would be encountered;
- There is a security threat occurring that would have an adverse impact on the personnel while leaving the site; and/or
- A condition similar to these in magnitude, which, in the opinion of the Station Emergency Director, would adversely affect the site personnel.

Security forces will be dispatched, when available, to access road(s) in order to control entry to site facilities. Unauthorized and non-ERO personnel will be denied entry. In addition, the initiation of a site evacuation will be reported to the appropriate state/local agency.

10.1.4 Accountability

The Station Emergency Director will initiate assembly and accountability procedures whenever it is deemed necessary (see Section 3.3.5.1.2). The purpose of the assembly will be to account for all personnel inside the protected area, and to gather emergency personnel at prearranged locations.

A site assembly with accountability will be required to be initiated whenever a site area emergency or higher level event is declared. The movement of personnel for the purposes of accountability may be delayed if their health and safety could be in jeopardy, such as severe weather or for security reasons.

If it is determined that the prearranged assembly area is unfit for personnel, the Station Emergency Director may designate an alternative site assembly area and assemble personnel using appropriate communication systems that are available.

When accountability of on-site personnel is determined necessary by the Station Emergency Director, then all personnel within the protected area shall be accounted for, and the names of missing individuals will be ascertained within 30 minutes of announcing the assembly.

Once established, accountability within the protected area will be maintained throughout the course of the event. If missing personnel are identified, search and rescue operations will be initiated.

10.1.5 Provisions for On-Site Personnel

The Applicant will maintain an inventory of respiratory protection equipment, anti-contamination clothing, and KI that will be made available to emergency workers remaining on site should conditions warrant. During the course of an emergency, protective actions will be considered to minimize radiological exposures or contamination problems associated with all on-site personnel. For those who must work within the restricted area of the EGC ESP Site, measures will be considered and are described in the following sections.

10.1.5.1 Use of Respirators

On-shift and emergency response personnel will use respiratory protection in any environment involving exposure to high-level gaseous activity, an oxygen deficient atmosphere, or where air quality is in doubt. In the presence of airborne particulates, emergency response personnel may be directed by health physics personnel to use full-face

filter type respirators. The criteria for issuance of respiratory protection will be described in the EGC ESP Facility RP procedures (see Section 11.2).

10.1.5.2 Use of Protective Clothing

Anti-contamination clothing, located in the TSC, OSC, and facility dress out areas is available for use by on-site personnel. The criteria for issuance of protective clothing will be described in the EGC ESP Facility RP procedures.

10.1.5.3 Use of Potassium Iodide

The use of KI may be recommended when a projected dose of 50 rem committed dose equivalent (CDE) is exceeded for an emergency worker's thyroid. This is the value specified by USEPA-400-R-92-001, *Manual of Protective Action Guides and Protective Actions for Nuclear Incidents* (USEPA, 1992). The EGC ESP Facility will be responsible for maintaining a supply of KI. The Station Emergency Director will have the responsibility for approval of issuing KI to the Applicant's emergency workers (see Section 3.3.4).

10.1.6 Mechanism for Implementing Protective Action Recommendations

Plant conditions, projected dose and dose rates, and/or field monitoring data will be evaluated to develop PARs for the purpose of preventing or minimizing exposure to the general public. The PARs will be made to the off-site agencies responsible for implementing protective actions for the general public within the 10-mi EPZ, and will be approved by the Emergency Director in command and control. In an emergency that requires immediate protective actions be taken prior to activation of the emergency facilities, PARS are provided directly to the state and county 24 hour warning points by the Emergency Director.

10.1.7 Capability of Implementing Protective Action Recommendations

Implementing protective measures, based on PAGs for the off-site population-at-risk, is the responsibility of state and local governments. Detailed procedures for public protective actions are contained in the state and local radiological emergency response plans (State of Illinois, 2001 and 2003).

State agencies will be responsible for the evaluation of the Applicant's recommended protective actions, and for preparing a recommendation to the Governor, or his/her appointed agent. Only when the state acts under the Governor's order does a recommended protective action become a directed protective action (State of Illinois, 2001).

If the plant conditions are stable and off-site radiological conditions are such that the public health and safety are not endangered, then the return to the evacuated areas may be discussed with the state. State authorities will be responsible for actually recommending return, and for transmitting this recommendation.

10.1.8 Implementation of Protective Action Recommendations

This plan, as well as the state and county emergency plans used to implement the protective measures for the plume exposure pathway, takes numerous factors into consideration when determining protective actions.

10.1.8.1 Evacuation Routes and Destinations

Most of the public evacuees are expected to travel in their own vehicles, leaving the EPZ via designated evacuation routes. Figure 2.2-1 and Figure 2.3-1 show the evacuation routes and EPZ subareas. The state and county plans contain official maps and information on the locations of relocation centers (State of Illinois, 2001 and 2003). Figure 2.3-1 shows registration and congregate care shelters.

10.1.8.2 Population Distribution

Population distribution for the plume exposure pathway EPZ is provided in Table 2.1-1, Table 2.3-1, Figure 2.2-2, and Figure 2.3-2.

10.1.8.3 Notification Time

As indicated in Chapter 5, off-site agencies will be notified within 15 minutes of classification of an emergency. State and county agencies have the capability to notify all members of the transient and resident population within the plume exposure pathway EPZ (State of Illinois, 2001 and 2003).

10.2 Protective Action Recommendation

At a general emergency classification, the Applicant will provide the State of Illinois with recommendations for protective actions for the public. For incidents involving actual, potential, or imminent releases of radioactive material to the atmosphere, USEPA-400-R-92-001, NUREG-0654, Supplement 3, and the USNRC *Response Technical Manual* (RTM-96) will be used as the basis for the general public PARs (USEPA, 1992; USNRC 1996a, and 1996b).

10.2.1 Plant-Based Protective Action Recommendations

Figure 10.2-1 has been developed to aid the Applicant's personnel by providing PARs based on the above recommendations (USNRC, 1996b). The EGC ESP Facility specific PAR flowcharts will be documented in the Final Emergency Plan. These flowcharts and tables will provide technically-based PARs based on plant conditions and core damage indicators. These flowcharts will be consistent with the Illinois Plan (State of Illinois, 2001). Possible plant-based PARs issued by the Applicant at a general emergency will include the following:

- Evacuation of the general public within a 2-mi radius and 5-mi downwind (minimum PAR issued); and
- Evacuation of the general public within a 5-mi radius and 10-mi downwind.

10.2.2 Dose-Based Protective Action Recommendation

Evacuation will be recommended if projected doses reach the minimum USEPA PAGs (greater than or equal to 1 rem EPA TEDE[1] or greater than or equal to 5 rem CDE Thyroid).

Many assumptions exist in dose assessment calculations, involving both source term and meteorological factors, which make computer predictions over long distances highly questionable. However, in the event dose assessment results indicate the need to recommend actions beyond the outer EPZ boundaries, that is, past 10 miles, Field Monitoring Teams are dispatched to downwind areas to verify the calculated exposure rates prior to issuing PARs outside the EPZ.

Applicant personnel normally do not have the necessary information to determine whether off site conditions would require sheltering instead of evacuation. An effort to base PARs on external factors (such as road conditions, traffic/traffic control, weather, or offsite emergency response capabilities) is usually performed by the State.

[1] EPA TEDE is defined as the sum of the doses from external exposure and inhalation from the plume, and from 4 days of external exposure to deposited materials.

10.3 Monitoring of Evacuees

The state and county organizations currently (2003) have the capability to register and monitor evacuees at designated reception centers. This capability includes personnel and equipment capable of monitoring residents and transients evacuating from the plume exposure pathway EPZ and arriving at the reception centers, in accordance with FEMA guidelines (State of Illinois, 2001).

Figure 10.2-1
Generic PAR Flowchart

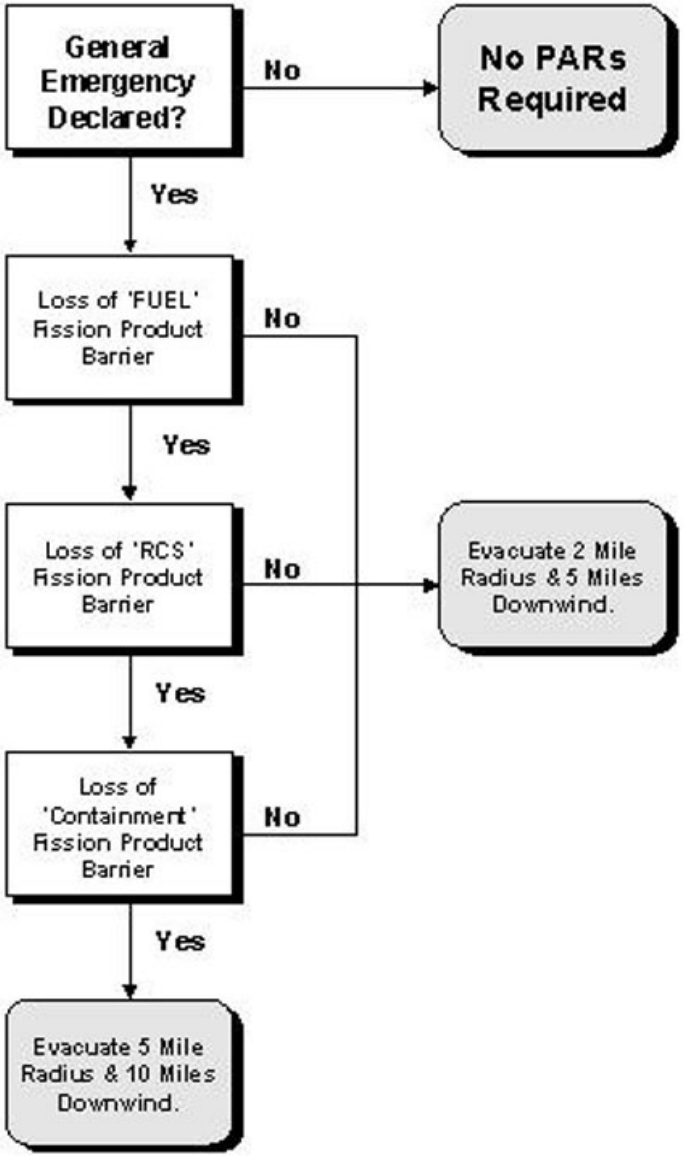

Data Source:
USEPA, 1992
USNRC, 1996b

Not to Scale

CHAPTER 11

Radiological Exposure Control

The radiological exposure control information in this chapter is presented in the following sections:

- Emergency Exposure Guidelines (Section 11.1)
- Emergency Radiation Protection Program (Section 11.2).

This chapter describes the means for controlling emergency worker radiological exposures during an emergency, as well as the measures that will be used by the Applicant to provide necessary assistance to persons injured or exposed to radiation and/or radioactive materials. This information is based on and consistent with the *Exelon Nuclear Standardized Radiological Emergency Plan* (EGC, 2003). Exposure guidelines in this chapter are consistent with the USEPA Emergency Worker and Lifesaving Activity PAGs described in USEPA-400-R-92-001 (USEPA, 1992).

11.1 Emergency Exposure Guidelines

After being licensed by the USNRC, the EGC ESP Facility will maintain personnel exposure control programs in accordance with 10 CFR 20 under normal operating conditions. The Station Emergency Director shall have the non-delegable responsibility for authorizing personnel exposure levels under emergency conditions per USEPA Emergency Worker and Lifesaving PAGs (USEPA, 1992). In emergency situations, workers may receive exposure under a variety of circumstances in order to assure safety and protection of others and of valuable property. These exposures will be justified if the maximum risks or costs to others that are avoided by their actions outweigh the risks to which the workers are subjected. The emergency worker dose limits are provided in Table 11.1-1. Dose extensions beyond 10 CFR 20 limits must be authorized by the Emergency Director (see Section 3.3.4) (USEPA, 1992). Whenever possible, the concurrence of the Radiation Protection Manager (RPM) should be secured before individuals are exposed to dose equivalents beyond the USEPA-400 lower limit.

11.2 Emergency Radiation Protection Program

The TSC RPM will be the individual responsible for the implementation of the RP actions during an emergency (see Section 3.3.5.1.9). RP guidelines are described below.

- Volunteers over 45 years of age will be considered first for any emergency response action requiring exposure greater than normal limits. Routine dose limits shall not be extended to emergency dose limits for declared pregnant individuals. As in the case of normal occupational exposure, doses received under emergency conditions should be maintained as low as reasonably achievable.
- Persons undertaking any emergency operation in which the dose will exceed 25 rem TEDE shall do so only on a voluntary basis and with full awareness of the risks involved. This includes the numerical levels of dose in which acute effects of radiation will be incurred and the numerical estimates of the risk of delayed effects.
- In the context of the emergency limits, exposure to workers that is incurred for the protection of large populations may be considered justified for situations in which the collective dose avoided by the emergency operation is significantly larger than that incurred by the workers involved.
- Exposure accountability will be maintained and proper personnel radiological monitoring equipment will be provided for all personnel during emergency conditions.
- Access to high radiation areas will be only permitted with prior approval of the applicable RPM. In addition, personnel will not be allowed to enter known or potentially high radiation areas unless their exposure has been properly evaluated.
- Periodic habitability surveys of emergency facilities will be performed during an emergency. If the facility is determined to be uninhabitable, the facility will be evacuated in order to prevent or minimize exposure to radiation and radioactive materials. Alternate assembly areas will be established, as necessary, to relocate and monitor evacuated personnel.

11.2.1 Personnel Monitoring

Emergency workers will receive TLD badges and personal self-reading dosimeters capable of measuring expected exposures on a real time basis. The capability exists for the emergency processing of TLDs on a 24-hr per day basis, if necessary (see Section 3.4.7).

In addition, emergency worker dose records will be maintained by the RPMs (as appropriate) in accordance with future emergency and radiological protection procedures. Emergency workers will be instructed to read their dosimeters frequently, and TLDs may be processed with increased periodicity.

11.2.2 Non-Applicant Personnel Exposure Authorization

The responsibility for authorizing non-Applicant emergency workers (i.e., state and local agency emergency workers) to receive exposures in excess of the USEPA general public PAGs does and will belong to the state and county organizations, except when such

emergency workers are on site. Authorization of exposures in excess of USEPA General Public PAGs, in this latter instance, will belong to the Station Emergency Director (see Section 3.3.5.1.2).

11.2.3 Contamination and Decontamination

During an emergency, the Station Emergency Director will be responsible for preventing or minimizing personnel exposure to radioactive materials deposited on the ground or other surfaces. Special consideration should be given to setting up contamination control arrangements for personnel entering the OSC after completion of assigned activities.

During emergency conditions, normal plant contamination control criteria will be adhered to as much as possible. However, these limits may be modified by the applicable RPM per existing RP procedures should conditions warrant (see Section 3.3.5.1.9).

11.2.3.1 Contamination Control Means

Personnel found to be contaminated will normally be attended to at decontamination areas located onsite. Temporary decontamination areas can also be established. These areas will be used by radiological controls personnel to decontaminate non-life threatening wounds using procedures for decontamination of personnel with skin or clothing contamination with the assistance of Emergency Response personnel (e.g., EMTs or ambulance personnel). Life threatening wounds will be decontaminated at the "hot" emergency room at the John Warner Hospital by trained medical personnel with the support of station radiological controls personnel.

Decontamination showers and supplies will be provided on site with additional personnel decontamination equipment and capabilities as necessary. Shower and sink drains in the controlled area will be routed to the miscellaneous waste processing system, where the liquid is processed and monitored prior to discharge. Potentially contaminated emergency vehicles will be surveyed before they are allowed to leave the EGC ESP Facility or off-site assembly area. If the survey area is not suitable for monitoring and decontamination due to radiological or other concerns, vehicles will be surveyed at an alternate location.

11.2.4 Contamination Control Measures

Controls will be established 24-hrs per day in order to contain the spread of loose surface radioactive contamination.

Areas in the EGC ESP Facility found to be contaminated will be isolated as restricted areas with appropriate radiological protection and access control. Personnel leaving contaminated areas will be monitored to ensure they and their clothing are not contaminated. If found contaminated above acceptable levels, they will be decontaminated in accordance with future EGC ESP Facility procedures. If normal decontamination procedures do not reduce personnel contamination to acceptable levels, the case will be referred to a competent medical authority. Supplies, instruments, and equipment that are in contaminated areas or have been brought into contaminated areas will be monitored prior to removal. If found to be contaminated, they will be decontaminated using normal EGC ESP Facility decontamination techniques or may be disposed of as radwaste. Furthermore, contaminated vehicles will be decontaminated before being released.

Measures will be taken to control on-site access to potentially contaminated potable water and food supplies. Under emergency conditions when uncontrolled releases of activity have occurred, eating, drinking, smoking, and chewing will be prohibited in all Facility ERFs until such time as habitability surveys indicate that such activities are permissible.

Restricted areas and contaminated items will be returned to normal use when contamination levels have been returned to acceptable levels. Contamination control criteria for returning areas and items to normal use will be contained in the EGC ESP Facility procedures.

11.2.5 Decontamination of Relocated Personnel

Non-essential on-site personnel may be evacuated to an off-site relocation center or assembly area. Radiological controls personnel, at that location, will monitor evacuees and determine the need for decontamination. Existing and temporary facilities to limit contamination and exposure will be utilized and established at the site as necessary during an emergency situation. In the event that decontamination of evacuees is not locally possible, personnel will be sent to designated locations for monitoring and decontamination. Provisions for extra clothing will be made and suitable decontaminates will be available for the expected type of contamination, particularly with regards to skin contamination.

CHAPTER 11

Tables

TABLE 11.1-1
Emergency Exposure Guidelines

Dose Limit (rem TEDE)	Activity	Condition
0-5	All	Personnel should be kept within normal 10 CFR 20 limits during bona fide emergencies, except as authorized for activities as indicated below.
5-10	Protecting valuable property	Lower dose not practicable.
10-25	Lifesaving or protection of large populations	Lower dose not practicable.
> 25	Lifesaving or protection of large populations	Only on a voluntary basis to persons fully aware of the risks involved.

Source: USEPA, 1992

Note: Limit dose to the lens of the eye to 3 times the above values and doses to any other organ (including skin and other body extremities) to 10 times the above values.

CHAPTER 12

Medical and Public Health Support

The medical and public health support information in this chapter is presented in the following sections:

- Off-Site Hospital and Medical Services (Section 12.1)
- On-Site First Aid Capability (Section 12.2)
- Medical Service Facilities (Section 12.3)
- Medical Transportation (Section 12.4).

This chapter describes the arrangements for medical services for contaminated injured individuals sent from the EGC ESP Facility. These arrangements are identical to those established for the CPS. This information is based on and consistent with the *Exelon Nuclear Standardized Radiological Emergency Plan* (EGC, 2003).

12.1 Off-Site Hospital and Medical Services

Medical treatment given to injured persons at the EGC ESP Facility will be of a first aid nature. When more professional care is needed, injured persons will be transported to a local hospital or clinic. Hospital personnel are trained and hospitals are equipped to handle contaminated or radiation injured individuals. Specifically, training of medical support personnel at the agreement hospitals will include basic training on the nature of radiological emergencies, diagnosis and treatment, and follow-up medical care. EGC ESP Facility personnel will be available to assist medical personnel with decontamination radiation exposure and contamination control. Arrangements, confirmed by letter of agreement or contract every two (2) calendar years, will be maintained with a qualified hospital located in the vicinity of the EGC ESP Facility for receiving and treating contaminated or exposed persons with injuries requiring immediate hospital care. The Applicant will provide medical consultants to aid in any special care necessary at these facilities.

Arrangements, confirmed by letter of agreement every two or more calendar years, will also be maintained by the corporate office with a qualified major medical facility well-equipped and staffed for dealing with persons having radiation injuries. John Warner Hospital in Clinton, IL will be the primary supporting medical facility for injured persons who are contaminated with radioactivity. Whenever necessary, such persons will be transferred to this major hospital facility for extended specialized treatment (see Appendix A). The Applicant will have available to the staff of this hospital, medical consultants who will provide the direction of the special care necessary for the treatment of persons having radiation injuries (see Section 3.4.5).

12.2 On-Site First Aid Capability

The EGC ESP Site will maintain on-site first aid supplies and equipment necessary for the treatment of contaminated or injured persons (NFPA, 1997). In general, physicians or nurses will not be staffed at the Applicant's generating facilities, and as such, medical treatment given to injured persons will be of a "first aid" nature. However, each facility currently (2003) has an industrial hygiene advisor. Additionally, the RP technicians at each nuclear facility are experienced in control of radioactive contamination and decontamination work. EGC ESP Facility personnel will also be trained and qualified to administer first aid. At least two of these individuals will be available on-shift at all times. The functions of facility personnel in handling on-site injured people will include the following:

- Afford rescue;
- Administer first aid including such resuscitative measures as are deemed necessary;
- Begin decontamination procedures; and
- Arrange for suitable transportation to a hospital when required.

Primary attention shall be directed to the actual factors involved in the treatment of casualties, such as control of bleeding, resuscitation including heart and lung, control of bleeding after resuscitation, protection of wounds from bacterial or radioactive contamination, and the immobilization of fractures.

Facility personnel will provide an initial estimate of the magnitude of surface contamination of the injured and preliminary estimates of total body dose to the injured. Primary rapid and simple decontamination of the surface of the body (when possible and advisable) before transportation to a designated hospital may be carried out as directed or performed by RP personnel. When more professional care is needed, injured persons will be transported to the John Warner Hospital in Clinton, IL, which is the primary supporting medical facility (see Appendix A).

12.3 Medical Service Facilities

Radiation injuries involve specialized diagnosis and treatment; therefore, Exelon Corporate Emergency Preparedness maintains an agreement with the REAC/TS (see Section 3.4.5). The REAC/TS is a radiological emergency response team of physicians, nurses, health physicists, and necessary support personnel on 24-hr call to provide consultative or direct medical or radiological assistance at the REAC/TS facility or at the accident site (see Appendix A). Specifically, the team has expertise in and is equipped to conduct medical and radiological triage; decontamination procedures and therapies for external contamination and internally deposited radionuclides including chelation therapy; diagnostic and prognostic assessments or radiation-induced injuries; and radiation dose estimates by methods that include cytogenetic analysis, bioassay, and in vivo counting.

12.4 Medical Transportation

Arrangements will be made by the Applicant for prompt ambulance transport of persons with injuries involving radioactivity to designated hospitals (see Appendix A). Such service will be available on a 24-hr per day basis, and will be confirmed by letter of agreement. Radiation monitoring services shall be provided by the Applicant whenever it becomes necessary to use the ambulance service for the transportation of contaminated persons. A qualified RP technician shall accompany the ambulance to the hospital. Additional RP technicians may be contacted and dispatched to local hospitals to assist in the monitoring and decontamination of the injured victim, hospital facilities and personnel, and ambulance facilities and personnel.

CHAPTER 13

Recovery and Re-Entry

This section describes the measures to be taken for re-entry into the areas of the ESP Facility which will have been evacuated as a result of an accident. It also outlines the Applicant's recovery organization and its concepts of operations. This information is presented in the following sections:

- Re-Entry and Recovery Planning Concepts (Section 13.1)
- Recovery Organization (Section 13.2)
- Recovery Phase Notification (Section 13.3)
- Total Population Exposure (Section 13.4).

The information in the chapter is based on and consistent with the *Exelon Nuclear Standardized Radiological Emergency Plan* (EGC, 2003).

13.1 Re-Entry and Recovery Planning Concepts

During an emergency, immediate actions are directed toward limiting the consequences of the accident to afford maximum protection to station personnel and the general public. Once corrective measures have been taken and effective control of the plant has been re-established, a more methodical approach to re-entry will be taken. This Emergency Plan divides re-entry into two categories:

- Re-entry *during the emergency phase of an accident* is performed to save a life, control release of radioactive material, prevent further damage to plant equipment of restore plant equipment. If necessary, this category of re-entry may be performed using emergency exposure limits. Briefings, rather than written radiation protection procedures, may be used when making these entries.

  All re-entry activities conducted during the emergency are authorized by the Station Emergency Director (Section 3.3.5.1.2), and coordinated by the OSC Director (Section 3.3.5.1.14) and the Radiation Protection Manager (Section 3.3.5.1.9).

- Re-entry *during the recovery phase of an accident* is performed using normal exposure limits. Either normal procedures or procedures that consider existing as well as potential conditions inside affected areas are developed specifically for each re-entry.

  Re-entry activities during the recovery phase are authorized by the Recovery Director (Sections 13. 2.1 and 3.3.5.2.2) and coordinated by the recovery organization managers in charge of personnel making the re-entry.

13.1.1 Planning Phase

The following items will be considered when planning for any re-entry:

- Review of available radiation surveillance data to determine plant areas potentially affected by radiation and/or contamination;
- Review of radiation exposure history of personnel required to participate in the accident migration or recovery operations;
- Determination of the need for additional personnel and the sources of these additional personnel;
- Review of adequacy of radiation survey, instrumentation and equipment (types, ranges, number, calibration, etc.);
- Review of non-radiological hazards and required protective measures (e.g., fire, electrical, hazardous materials);
- Pre-planning of activities and briefings for the re-entry team that include the following:
  - Personnel knowledge requirements;
  - Methods and procedures that will be employed during the entry;
  - Specific tasks to be performed;

  - Anticipated radiation and contamination levels;
  - Radiation survey equipment and types and ranges of dosimetry required;
  - Shielding requirements and availability;
  - Appropriate communications;
  - Protective clothing and equipment requirements;
  - Access control procedures;
  - Decontamination requirements;
  - Debriefing requirements; and
  - Respiratory protection.
- A review of security controls to prevent unauthorized or unintentional entry into hazardous areas.

13.1.2 Evaluating Entry into Recovery

The recovery phase is that period when major repairs are being performed to return the plant to an acceptable condition and the possibility of the emergency condition degrading no longer exists. Once the plant has been stabilized, contained, and controlled, the recovery phase may be entered. It is the responsibility of the Station Emergency Director to classify recovery after obtaining authorization from the Corporate Emergency Director.

Establishment of recovery can be conducted from any emergency classification level. However, it is possible that the lower classifications of unusual event and alert will conclude with the event being terminated (see Section 4.6). There may be cases where certain EAL initiating conditions remain exceeded, but the station is under control and no further danger of degradation exists. In such a case, it may be appropriate to enter recovery. Site Area and General Emergencies will require a recovery phase to be established prior to event termination. The Applicant may consult with/notify cognizant governmental agencies prior to declaring recovery or event termination (see Section 4.5).

The following conditions are guidelines for the determination of establishing recovery (this is not intended to be a complete list and additional criteria may apply, depending on the specifics of the event):

- The risk to the health and safety of the public has been mitigated;
- Plant parameters and equipment status have been established and controlled;
- In-plant radiation levels are stable or decreasing and acceptable, given the plant conditions;
- The potential for uncontrolled releases of radioactive material to the environment has been eliminated;
- Environmental monitoring has been established;

- The radioactive plume has dissipated and plume tracking is no longer required (the only environmental assessment activities in progress are those necessary to asses the extent of deposition resulting from passage of the plume);
- ESP Facility workers have been protected;
- Any security threat has been neutralized, and/or plant security is under the direction of Applicant personnel;
- Adequate plant safety systems are operable;
- The reactor is in a stable shutdown condition and long-term core cooling is available;
- The fuel pool damage has been mitigated, or spent fuel damage has been contained and controlled;
- Primary and/or secondary containment integrity has been established;
- Plant systems and equipment are restored and/or replaced such that plant conditions are stable, and highly unlikely to degrade further;
- Conditions that initiated the emergency have been contained, controlled, eliminated, or stabilized such that the classification is no longer applicable;
- The operability and integrity of radioactive waste systems, decontamination facilities, power supplies, electrical equipment and plant instrumentation, including radiation monitoring equipment has been established;
- Any fire, flood, earthquake, or similar emergency condition or threat to security no longer exists;
- All required notifications have been made;
- Discussions have been held with federal, state, and county agencies and agreement has been reached to terminate the emergency;
- At an alert or higher classification, the ERO is in place and emergency facilities are activated;
- Any contaminated injured person has been treated and/or transported to a medical care facility; and
- Off-site conditions do not unreasonably limit access of outside support to the station and qualified personnel and support services are available.

It is not necessary that all conditions above be met; however, all items must be considered prior to entering the recovery phase. For example, it is possible that after a severe accident that some conditions remain that exceed an Emergency Action Level, but entry into the recovery phase is appropriate.

13.2 Recovery Organization

Once plant conditions have been stabilized and the recovery phase has been initiated, the Emergency Director may form a recovery organization for long-term operations. These types of alterations will be discussed with the USNRC prior to implementation.

- For events of a minor nature (i.e., for Unusual Event classifications), the normal on-shift organization should be adequate to perform necessary recovery actions.
- For events where damage to the plant has been significant, but no off-site releases have occurred and/or protective actions were not performed (i.e., for alert classifications), the ESP Facility ERO, or portions thereof, should be adequate to perform the recovery tasks prior to returning to the normal station organization.
- For events involving major damage to systems required to maintain safe shutdown of the plant and off-site radioactive releases have occurred (i.e., for Site Area Emergency or General Emergency classifications), the recovery organization will be put in place.

The specific members of the recovery organization are selected based on the sequence of events that preceded the recovery activities as well as the requirements of the recovery phase. Following is the basic framework of the recovery organization.

13.2.1 Recovery Director

The Corporate Emergency Director is initially designated as the Recovery Director. The Recovery Director is charged with the responsibility for directing the activities of the station recovery organization. These responsibilities include the following:

- Ensuring that sufficient personnel, equipment, or other resources from Applicant and other organizations are available to support recovery;
- Directing the development of a recovery plan and procedures;
- Deactivating any of the ESP Facility ERO which was retained to aid in recovery, in the appropriate manner. Depending upon the type of accident and the on-site and off-site effects of the accident, portions of the ERO may remain in place after initiation of the recovery phase;
- Coordinating the integration of available federal and state assistance into on-site recovery activities;
- Coordinating the integration of Applicant staff with federal, state, and county authorities into required off-site recovery activities;
- Approving information released by the public information organization which pertains to the emergency or the recovery phase of the accident; and
- Determining when the recovery phase is terminated.

13.2.2 Recovery Plant Manager

The ESP Station Manager or a designated alternate will become the Recovery Plant Manager. The Recovery Plant Manager reports to the Recovery Director and is responsible for the following:

- Coordinating the development and implementation of the recovery plan and procedures;
- Ensuring that adequate engineering activities to restore the plant are properly reviewed and approved;
- Directing all on-site activities in support of the station recovery effort; and
- Designating other Exelon recovery positions in supports of on-site recovery activities.

13.2.3 Recovery Off-Site Manager

A senior Corporate Emergency Preparedness or Regulatory Affairs individual, or a designated alternate, will be the Recovery Off-Site Manager. The Recovery Off-Site Manager is responsible for the following:

- Providing liaison with off-site agencies and coordinating Applicant staff assistance for off-site recovery activities;
- Coordinating Applicant ingestion exposure pathway EPZ sampling activities and the development of an off-site accident analysis report;
- Developing a radiological release report; and
- Designating other recovery positions in supports of off-site recovery activities.

13.2.4 Company Spokesperson

A senior manager will be designated as the Company Spokesperson. The Company Spokesperson reports to the Recovery Director and is responsible for the following:

- Functioning as the official spokesperson to the press for the Applicant on all matters relating to the accident or recovery;
- Coordinating non-Applicant public information groups (federal, state, county, etc.);
- Coordinating media monitoring and rumor control; and
- Determining what public information portions of the ERO will remain activated.

The remainder of the recovery organization will be established and an initial recovery plan will be developed at the end of the emergency phase or just after entry into the recovery phase. Consideration will be given to recovery activity needs and use of the normal ESP Station organizations. Individual recovery supervisors may be designated in any or all of the following areas:

- Training;

- Radiation Protection;
- Chemistry;
- Technical/Engineering Support;
- Nuclear Oversight;
- Operations;
- Security;
- Maintenance; and
- Special Off-Site Areas (Community Representatives, Environmental Samples, Investigations, etc.).

13.3 Recovery Phase Notifications

When the decision is made to enter the recovery phase, all members of the Applicant's ERO are informed of the change. All appropriate personnel are instructed of the recovery organization and their responsibilities to the recovery effort.

13.4 Total Population Exposure

Total population exposure calculations are performed and periodically updated during the recovery phase of an accident. A method has been developed for estimating the total population exposure resulting from the accident from data collected in cooperation with the federal and state agencies. Total population exposure is determined using a variety of methods such as the following:

- Examination of pre-positioned TLDs;
- Bioassay;
- Estimates based on release rates and meteorology; and
- Estimates based on environmental monitoring of food, water, and ambient dose rates.

The State of Illinois will be the lead agency in the collection and analysis of environmental air, soil, foliage, food, and water samples, and for the generation of radiation monitoring reports. The Applicant's environmental sampling activities will be coordinated with state efforts, as requested, and results shared with cognizant agencies.

CHAPTER 14

Drills and Exercises

(Not required by rule or guidance [USNRC, 1996]. *This is a place holder for alignment with Section N of the Exelon Nuclear Standardized Radiological Emergency Plan* [EGC, 2003].)

CHAPTER 15

Radiological Emergency Response Training

This chapter describes the emergency response training that will be provided to those who may be called upon in an emergency, and outlines the training provided by the Applicant to both its employees and off-site support personnel requiring site access, in the following sections:

- Assurance of Training (Section 15.1)
- Functional Training of the Emergency Response Organization (Section 15.2)
- First Aid Response (Section 15.3)
- Emergency Response Organization Training Program (Section 15.4)
- General, Initial, and Annual Training Program Maintenance (Section 15.5).

This information is based on and consistent with the *Exelon Nuclear Standardized Radiological Emergency Plan* (EGC, 2003).

15.1 Assurance of Training

The Emergency Plan Training Program will assure the training, qualification, and requalification of individuals who may be called for assistance during an emergency. Specific emergency response task training, prepared for each emergency plan position, will be described in lesson plans and study guides. The lesson plans, study guides, and written tests will be contained in the ERO Training Program. Responsibilities for implementing the training program will be contained in EGC ESP Facility procedures.

Off-site training will be provided to support organizations that may be called upon to provide assistance in the event of an emergency. The following paragraphs outline the training to be received by these organizations.

- At the appropriate time in the future, Emergency Preparedness shall make an annual written offer to train those non-Applicant organizations, referenced in the Final Emergency Plan for the EGC ESP Facility, which may provide specialized services during a nuclear plant emergency (e.g., local law enforcement, fire fighting, medical services, transport of injured). The training made available is designed to acquaint the participants with the special problems potentially encountered during a nuclear plant emergency, notification procedures, and their expected roles. Those organizations that must enter the site shall also receive site-specific emergency response training, and will be instructed as to the identity (by position and title) of those persons in the on-site organization who will control their support activities.
- Training of off-site EROs will be described in their respective emergency plans, with support provided by the Applicant as requested.

15.2 Functional Training of the Emergency Response Organization

In addition to general and specialized classroom training, members of the Applicant ERO will receive periodic performance-based emergency response training. Performance-based training will be provided using one or more of the methods described in the sections below.

15.2.1 Familiarization Sessions

A familiarization session is an informal, organized tabletop discussion of predetermined objectives.

15.2.2 Walk-Throughs

A walk-through consists of a facility tour to familiarize plant ERO personnel with procedures, communications equipment, and facility layout. Walk-throughs also provide the opportunity to discuss facility activities, responsibilities, and procedures with an instructor.

15.2.3 Drills

A drill is a supervised instruction period aimed at testing, developing, and maintaining skills in a particular operation. These drills allow the individuals to demonstrate the ability to perform their assigned emergency functions. During drills, on-the-spot correction of erroneous performance may be made, and a demonstration of the proper performance is offered by a Controller.

15.3 First Aid Response

Selected EGC ESP Facility personnel will be trained in accordance with an Applicant approved First Aid Program (NFPA, 1997). First aid teams will likely be augmented with additional personnel, such as fire brigade members and other personnel qualified to assist in the rescue.

15.4 Emergency Response Organization Training Program

Applicant ERO personnel who will be responsible to implement this plan will receive specialized training. The training program for emergency response personnel will be developed based on the requirements of 10 CFR 50, Appendix E, and position-specific responsibilities as defined in this document (see Chapter 3).

On-shift emergency response personnel will perform emergency response activities as an extension of their normal duties, and will be trained annually as part of their duty specific training. Additional Emergency Preparedness information is provided as part of the Facility Nuclear General Employee Training.

New ERO personnel will receive an initial overview course that familiarizes them with the Emergency Plan by providing basic information in the following areas:

- Planning basis;
- Emergency classifications;
- ERO and responsibilities;
- Call-out of emergency organization;
- ERFs;
- Communications protocol/emergency public information; and
- Off-site organizations.

Emergency response personnel in the categories listed below will receive the knowledge, and/or performance-based initial training and annual retraining described in the following sections.

15.4.1 Directors, Managers, and Coordinators within the Facility and Corporate Emergency Response Organization

Personnel identified as Directors, Managers, and Coordinators for the facility and corporate EROs will receive training appropriate to their position in accordance with the approved ERO training program. These personnel will receive specialized training in the following areas:

- Notifications;
- Emergency classifications;
- PARs;
- EALs; and
- Emergency exposure control.

Selected Directors, Managers, Coordinators and Shift Emergency Directors receive training in accordance with the approved ERO Training Program. Training in accident assessment sufficient to classify an event and to mitigate the consequences of an event are also covered.

15.4.2 Personnel Responsible for Accident Assessment

The skills and knowledge required to perform plant stabilization and mitigation will be a normal function of operations-specific positions, as identified in Chapter 3 of this plan. Power changes and planned and unplanned reactor shutdowns will be handled on a normal operation basis. Subsequent EGC ESP Facility stabilization and restoration will be pursued utilizing normal operating procedures. Licensed operators will receive routine classroom and simulator training to ensure proficiency in this area.

Active senior licensed CR personnel will have training conducted in accordance with the approved ERO training program such that proficiency is maintained on certain topics. The topics listed below shall be covered on an annual basis at a minimum:

- Event Classification;
- PARs;
- Radioactive release rate determination;
- Notification form completion and use of the NARS system;
- Federal, state, and local notification procedures as appropriate; and
- Site-specific procedures for activating the on-site and off-site ERO.

To remove peripheral duties from the operations shift, those positions responsible for accident assessment, corrective actions, protective actions, and related activities will receive training in core damage assessment. During an emergency in which core/cladding damage is suspected, a specialized group of trained individuals will perform core damage assessment. At a minimum, these people will receive classroom and hands-on training in the following areas:

- Available instrumentation and equipment;
- Isotopic assessment and interpretation; and
- Computerized CDAM and/or proceduralized assessment methods.

15.4.3 Radiological Monitoring Teams and Radiological Analysis Personnel

15.4.3.1 Off-Site Radiological Monitoring

Off-site radiological monitoring will be performed by trained individuals who provide samples and direct readings for dose assessment calculations and dose projection comparisons.

Personnel identified as members of field monitoring teams will receive classroom and hands-on training in the following areas (in accordance with the approved training program):

- Equipment and equipment checks;

- Communications; and
- Plume tracking techniques.

15.4.3.2 Personnel Monitoring

Personnel monitoring will be performed by trained individuals who monitor facility personnel and their vehicles for contamination during an emergency. Personnel monitoring team members will receive classroom and hands-on training in the following areas:

- Personnel monitoring equipment and techniques;
- Decontamination techniques for personnel; and
- Decontamination techniques for vehicles.

15.4.3.3 Dose Assessment

Dose assessment training includes the skills and knowledge necessary for calculation and interpretation of an off-site release and its impact on the environment under varying meteorological conditions. Individuals responsible for performing dose assessment will be trained in the following areas:

- Computerized dose assessment;
- PARs;
- Field monitoring team interface;
- Protective action guidelines associated with off-site plume exposure doses; and
- Basic meteorology.

15.4.4 Police, Security, and Fire Fighting Personnel

15.4.4.1 Local Police and Fire Fighting Personnel

The local police and fire departments will be invited to receive training as outlined in Section 15.1.

15.4.4.2 Security Personnel

EGC ESP Facility security personnel will be trained in accordance with training defined by the nuclear general employee training (NGET) (see Section 15.5.4 and Section 4.8) and the Applicant's Nuclear Security Program.

15.4.4.3 Fire Control Teams (Fire Brigades)

Facility fire brigades will be trained in accordance with training defined by the Applicant's Fire Protection Program (NFPA, 1996). Fire brigade personnel are considered the primary members of rescue teams, and will receive the appropriate Emergency Plan training as part of their training program. Training also will include rescue of personnel from hazardous environments.

15.4.5 Repair and Damage Control Teams

Operations, maintenance, and RP personnel will be trained as part of their normal job specific duties to respond to both normal and abnormal plant operations.

Operations personnel will be trained to recognize and to mitigate degrading conditions in the plant; mechanically and electrically isolate damaged or malfunctioning equipment; isolate fluid leaks; and minimize transients.

Maintenance personnel will be trained to troubleshoot and repair damaged or malfunctioning electrical, mechanical, or instrumentation systems as appropriate to their job classification.

RP personnel will be trained to assess the radiological hazards associated with equipment repair and to instruct personnel in the appropriate protective clothing requirements, respiratory protection requirements, stay times, and other protective actions specific to the conditions present.

At least 50 percent of people from departments that provide potential responders to the OSC as damage control team members will be required to be qualified in the use of respiratory protection equipment. These departments will be Operations, Radiation Protection, Chemistry and Maintenance (or equivalents); respiratory protection qualified people from these departments will include in-plant supervisors as well as craft/technicians.

15.4.6 First Aid and Rescue Personnel

First aid and rescue team members will receive training as outlined in Section 15.3.

15.4.7 Local Support Service Personnel

Local support service personnel providing assistance during an emergency will be invited to receive training as outlined in Section 15.1.

15.4.8 Medical Support Personnel

On-site medical personnel will receive specialized training in the handling of contaminated victims and hospital interface. Off-site ambulance and hospital personnel will be offered annual training in accordance with a program provided by emergency preparedness (see Section 15.1).

15.4.9 Public Information Personnel

Corporate and facility personnel responsible to disseminate emergency public information and respond to media and public information requests will receive specialized public information training.

15.4.10 Communications Personnel

ERO personnel will receive training on communications protocol as a part of the initial Emergency Response Overview Course. Personnel using specialized communications equipment that is not part of their normal daily function will receive initial and

requalification training on the equipment. Personnel involved in notifications to off-site agencies will receive specialized training in the notification process.

15.5 General, Initial, and Annual Training Program Maintenance

The EGC ESP Facility departments and the Applicant's Emergency Preparedness Department will share the responsibility for ensuring that the ERO receives the necessary training and retraining. The following sections list the responsibilities that are assigned to execute these training requirements

15.5.1 Corporate Responsibilities for Corporate Emergency Response Organization Personnel

The Corporate responsibilities for the Corporate ERO Personnel will include the following:

- Schedule and conduct initial, retraining, and make-up classes;
- Act as the sole contact point for ensuring attendance;
- Keep records for the training courses including dates of scheduled classes and non-attendance information;
- Verify that emergency response personnel training records are current; and
- Ensure instructional materials are prepared and reviewed every two years.

15.5.2 EGC ESP Facility Responsibilities for Facility Emergency Response Organization Personnel

The responsibilities of the EGC ESP Facility for facility ERO personnel will include the following:

- EGC ESP Facility management shall ensure the attendance of on-site personnel for training including required Emergency Plan courses.
- The EGC ESP Facility shall conduct on-site emergency personnel initial and retraining for facility emergency response personnel using approved lesson plans.
- The EGC ESP Facility Training Department shall provide those shift personnel included in a continuing training program, an annual review of the following items, at a minimum:
  - Assembly areas;
  - ERF assignment;
  - Potential hazards (radiological and non-radiological); and
  - Anticipated actions including assembly requirements, protective equipment requirements (clothing, masks, self contained breathing apparatus, etc.) the use of KI, emergency exposure limits, and accountability requirements.

15.5.3 Initial and Requalification Emergency Response Organization Training

The proficiency of emergency response personnel (as defined in 10 CFR 50, Appendix E) is described below.

- Assign people to emergency duties that are similar to those performed as a part of their regular work assignment or experience.
- Initial training and annual retraining on applicable generic and site-specific portions of the Emergency Plan and the corresponding implementing procedures. Individuals not demonstrating the required level of knowledge in initial or retraining classes will receive additional training in the areas requiring improvement. Annual retraining will be conducted on a calendar-year basis.
- Training in emergency plan changes shall be completed within 120 days of implementation of the change.
- Participate in exercises and/or drills as developed or authorized by the emergency preparedness department. These exercises and drills will be designed to sharpen those skills that personnel will be expected to use in the event of a nuclear emergency.

All personnel assigned specific position responsibilities in the ERO will be documented by inclusion in the emergency telephone directory listing of positions and personnel.

15.5.4 Nuclear General Employee Training

All personnel with unescorted EGC ESP Facility access will be provided with initial orientation training on the notification and instruction methods used in the event of an emergency. Additionally, badged individuals will receive initial orientation on the basic principles of radiological safety, including the effects of radiation and the theory and use of radiation detection devices. Appropriate actions for escorted individuals shall be the responsibility of the escort. The NGET will provide initial and annual requalification training on the basic elements of the Emergency Plan for all personnel working at the EGC ESP Facility. Specifically, these elements will include the following:

- Facility emergency alarms and their meaning;
- Assembly areas;
- Site and exclusion area evacuation procedures;
- Special precautions and limitations during an emergency; and
- Purpose of the emergency plan.

CHAPTER 16

Responsibility for the Planning Effort

The information in this chapter is presented in the following sections:

- Emergency Preparedness Staff Training (Section 16.1)
- Authority for the Emergency Preparedness Effort (Section 16.2)
- Responsibility for Development and Maintenance of the Plan(Section 16.3)
- Emergency Plan and Agreement Revisions (Section 16.4)
- Emergency Plan Distribution (Section 16.5)
- Supporting Emergency Response Plans (Section 16.6).

This chapter describes the responsibilities for development, review, and distribution of this Emergency Plan and actions that must be performed to maintain the Emergency Preparedness Program. Additionally, this chapter outlines the criteria for ensuring that personnel who perform the planning are properly trained. The information in this chapter is based on and consistent with the *Exelon Nuclear Standardized Radiological Emergency Plan* (EGC, 2003).

16.1 Emergency Preparedness Staff Training

The Applicant's Emergency Preparedness Department staff will be involved in maintaining an adequate knowledge of state of the art planning techniques and the latest applications of emergency equipment and supplies. At least once a calendar year, each member of the emergency preparedness staff will be involved in one of the following activities:

- Training courses specific or related to emergency preparedness;
- Observation of, or participation in, drills and/or exercises at other facilities;
- Participation in industry review and evaluation programs;
- Participation in regional or national emergency preparedness seminars, committees, workshops, or forums; and/or
- Specific training courses in related areas, such as systems, equipment, operations, radiological protection, or problem identification and resolution.

16.2 Authority for the Emergency Preparedness Effort

The Applicant's officers will be responsible for the safe and reliable operation of the EGC ESP Facility. The issuance and control of this plan and the activities associated with emergency preparedness at EGC shall be the overall responsibility of the Vice President of Licensing and Regulatory Affairs. The Vice President of Licensing and Regulatory Affairs will be assigned the responsibility for overall implementation of the EGC Emergency Plans.

16.3 Responsibility for Development and Maintenance of the Plan

The Applicant's MWROG Emergency Preparedness Manager will be responsible for the overall Radiological Emergency Preparedness Program associated with the EGC ESP Site and for administering the program to ensure availability of resources in the event of an emergency. The Emergency Preparedness Manager will report to the Vice President of Licensing and Regulatory Affairs.

16.3.1 Mid-West Regional Operating Group Emergency Preparedness Manager Responsibilities

The MWROG Emergency Preparedness Manager will be assisted by the regional and facility emergency preparedness staff. The specific responsibilities of the MWROG Emergency Preparedness Manager are listed in the following sections.

16.3.1.1 Program Administration

Program Administration responsibilities of the MWROG Emergency Preparedness Manager will include the following:

- Develop and maintain the Emergency Plan, future implementing procedures, and administrative documents;
- Develop and maintain 10 CFR 50.54(q) evaluations for changes to emergency planning documents;
- Coordinate and maintain the emergency planning activities schedule;
- Develop and maintain working relationships and coordinate meetings with federal, state, and local agencies;
- Ensure integration of plans between the Applicant and off-site agencies;
- Provide an opportunity to discuss EALs and the availability of nuclear oversight audit results relating to interface with governmental agencies;
- Coordinate, negotiate, and maintain agreements and contracts with off-site agencies and support organizations;
- Obtain letters of agreement with major medical facilities and medical consultants specifically skilled in the medical aspects of radiation accidents. (In addition, other medical consultants might be necessary for the case of a person involved in a radiation incident);
- Coordinate the development and annual distribution of the facility's public information publication;
- Coordinate and administer the Self Evaluation Program to monitor and evaluate the adequacy of the Emergency Preparedness Program;

- Coordinate and support emergency planning self-assessments, audits, and inspections;
- Ensure the documentation and resolution of adverse conditions in the Emergency Preparedness Program discovered through drills, audits, etc., in accordance with the Applicant's Corrective Action Program;
- Coordinate and develop operational experience responses;
- Coordinate, document, and review MWROG performance indicator data and reports;
- Provide oversight of drill and exercise performance evaluations during licensed operator requalification training;
- Coordinate and conduct emergency planning event reviews and reports;
- Maintain adequate documentation/files to support emergency planning activities;
- Develop and manage the emergency planning budget; and
- Maintain the Emergency Phone Directory.

16.3.1.2 Drills and Exercises

Tasks of the MWROG Emergency Preparedness Manager concerning drills and exercises will include the following:

- Coordinate and maintain the emergency planning drill and exercise schedule;
- Coordinate and conduct exercises and drills;
- Coordinate USNRC, FEMA, state, and local exercise scheduling and development activities;
- Coordinate drill and exercise scenario development activities;
- Develop and publish drill and exercise scenario manuals;
- Coordinate and perform controller and evaluator functions for drills and exercises;
- Coordinate response cells for drills and exercises; and
- Develop and issue drill and exercise reports.

16.3.1.3 Facilities and Equipment

Tasks concerning facilities and equipment for which the MWROG Emergency Preparedness Manager will be responsible include the following:

- Provide maintenance and administration of the ANS;
- Provide maintenance of the ERO call-out system;
- Ensure the emergency response facilities are maintained in a constant state of readiness;
- Coordinate and review the emergency planning equipment inventories;

- Coordinate and conduct maintenance and testing of the communications systems; and
- Maintain the emergency planning computer applications.

16.3.1.4 Emergency Response Organization Qualification and Administration

ERO Qualification and Administration tasks for which the MWROG Emergency Preparedness Manager will be responsible include the following:

- Develop and maintain ERO lesson plans, examinations, and qualification cards;
- Maintain emergency planning NGET training content;
- Coordinate, schedule, and conduct ERO qualification and requalification training;
- Oversee the maintenance of ERO training records;
- Maintain and coordinate publishing of the ERO duty rosters;
- Provide adequate oversight and support for the training of off-site response personnel;
- Coordinate and conduct Emergency Medical Assistance Program training; and
- Coordinate annual training for the media.

16.3.2 EGC ESP Facility Manager Responsibilities

The EGC ESP Facility Manager will be responsible for implementation of the Emergency Plan for the EGC ESP Facility. The Facility Manager responsibilities for maintenance of the Emergency Preparedness Program will include the following:

- Ensure adequate staffing and training of facility ERO members;
- Schedule and conduct drills and exercises to maintain the state of readiness of the Emergency Preparedness Program;
- Ensure the operational readiness of facility and communication systems for use during an emergency;
- Ensure that the operational readiness of facility emergency equipment and supplies is maintained; and
- Ensure the emergency response procedures for training and retraining of facility emergency response personnel are maintained.

16.4 Emergency Plan and Agreement Revisions

The *Exelon Nuclear Standardized Radiological Emergency Plan* (EGC, 2003) and supporting agreements will be reviewed on an annual basis. The annual plan review/update will include required changes identified during audits, assessments, training, drills, and exercises. The MWROG Emergency Preparedness Manager will be responsible for determining which recommended changes are incorporated into a plan or emergency procedure revision. In those years when the review does not warrant a revision, a letter to that effect will be issued.

This major features Emergency Plan for the EGC ESP Facility will not be revised for the duration of the ESP. When the EGC ESP is referenced in an application for a COL pursuant to 10 CFR 52, Subpart C, it is anticipated that the COL application will incorporate this plan into the *Exelon Nuclear Standardized Radiological Emergency Plan* in effect at that time, including the plant-specific information associated with the EGC ESP Facility in an appropriate annex. The COL application will also address any changes from this major features Emergency Plan for the EGC Facility that represent a decrease in the effectiveness, if any, pursuant to 10 CFR 50.54(q). As this major features Emergency Plan for the EGC ESP Facility is currently aligned with the *Exelon Nuclear Standardized Radiological Emergency Plan*, such changes will essentially be those already identified to the USNRC by EGC pursuant to 10 CFR 50.54(q) as changes to the *Exelon Nuclear Standardized Radiological Emergency Plan*. As such, the identification of most changes will be through reference to the 50.54(q) submittals, if any, and subsequent USNRC approvals.

16.5 Emergency Plan Distribution

The Emergency Plan for the EGC ESP Facility will not be distributed for implementation. The Final Emergency Plan and future EGC ESP Facility implementing procedures will be distributed on a controlled basis to the ERFs, selected federal, state, and local agencies, and other appropriate locations requiring them in association with pertinent activities prior to initial fuel loading. Controlled document holders will be issued revision changes upon approval. Procedures that control the revision of the Emergency Plan will require the use of revision bars and individual page identifications (i.e., section of plan, revision number).

16.6 Supporting Emergency Response Plans

Other plans that support this Emergency Plan include the following:

- NUREG-1471, USNRC, *Concept of Operations: NRC Incident Response* (USNRC, 1994);
- FRERP (FERA, 1996);
- INPO "Emergency Resources Manual," No. 03-001 (INPO, 2003);
- IPRA (State of Illinois, 2001);
- EGC ESP Facility Security Plan (to be developed for the COL); and
- USDOE, Region 5, Radiological Assistance Plan (USDOE, 1997).

The plan is formatted to align with the planning standards and evaluation criteria of NUREG-0654/FEMA-REP-1, Revision 1, *Criteria for Preparation and Evaluation of Radiological Emergency Response Plans and Preparedness in Support of Nuclear Power Plants* (USNRC, 1980) and NUREG-0654/FEMA-REP-1, Revision 1, Supplement 2, *Criteria for Emergency Planning in an Early Site Permit Application* (USNRC, 1996). The use of this format lends itself to an uncomplicated comparison of the criteria set forth in those documents. A cross reference matrix linking planning standards and evaluation criteria from that document to sections of this plan and the state (State of Illinois, 2001) and local plans (State of Illinois, 2003) is provided in Appendix B.

Glossary

Accident assessment	Accident assessment consists of a variety of actions taken to determine the nature, effects, and severity of an accident; and includes evaluation of reactor operator status reports, damage assessment reports, meteorological observations, seismic observations, fire reports, radiological dose projections, in-plant radiological monitoring, and environmental monitoring.
Annual	Frequency of occurrence equal to once per calendar year, January 1 to December 31.
Assembly/Accountability	A procedural or discretionary protective action taken for all persons within the security "protected area," which involves the gathering of personnel into predesignated areas and the subsequent verification that the location of these personnel is known.
Assessment actions	Those actions taken during or after an emergency to obtain and process information necessary to make decisions to implement specific emergency measures.
Classification	The classification of emergencies is divided into five categories or conditions covering the postulated spectrum of emergency situations. The first four emergency classifications are characterized by emergency action levels (EALs) or event-initiating conditions and address emergencies of increasing severity. The fifth, the recovery classification, is unique in that it may be viewed as a phase of the emergency, requiring specific criteria to be met and/or considered prior to its declaration.

Command and control	When in command and control, the designated emergency response facility (ERF) has overall responsibility for Exelon Nuclear's emergency response efforts, including the non-delegable responsibilities of command and control.
Committed dose equivalent	The dose equivalent to organs or tissues of reference that will be received from an intake of radioactive material by an individual during the 50-year period following the intake.
Control room	The operations center of a nuclear power plant from which the plant can be monitored and controlled.
Corrective action	Those emergency measures taken to lessen or terminate an emergency situation at or near the source of the problem, to prevent an uncontrolled release of radioactive material, or to reduce the magnitude of a release. Corrective actions include equipment repair or shutdown, installation of emergency structures, fire fighting, repair, and damage control.
Damage assessment	Estimates and descriptions of the nature and extent of damages resulting from an emergency or disaster; of actions that can be taken to prevent or mitigate further damage; and of assistance required in response and recovery efforts based on actual observations by qualified engineers and inspectors.
Damage control	The process of preventing further damage from occurring and preventing the increase in severity of the accident.
Decontamination	The reduction or removal of contaminated radioactive material from a structure, area, material, object, or person. Decontamination may be accomplished by (1) treating the surface so as to remove or decrease the contamination; (2) letting the material stand so that the radioactivity is decreased as a result of natural decay; and (3) covering the contamination.

Dedicated communications	A communications link between two or more locations, access to which is limited to designated locations, and which is used only for the intended purpose. The communications link may be either telephone or radio.
Dose	A generic term that means absorbed dose, dose equivalent, effective dose equivalent, deep dose equivalent, committed dose equivalent, committed effective dose equivalent, or total effective dose equivalent.
Dose equivalent	The product of the absorbed dose in tissue, quality factor, and all other necessary modifying factors at the location of interest. The unit of dose equivalent is the rem.
Dose projection	The calculated estimate of a radiation dose to individuals at a given location (normally off site), determined from the source term/quantity of radioactive material (Q) released, and the appropriate meteorological dispersion parameters (Chi/Q).
Dose rate	The amount of ionizing (or nuclear) radiation to which an individual would be exposed per unit of time. As it would apply to a person, dose rate is usually expressed as rems per hour or in submultiples of this unit, such as millirems per hour. The dose rate is commonly used to indicate the level of radioactivity in a contaminated area.
Dosimeter	An instrument such as a thermo-luminescent dosimeter (TLD), self-reading pocket dosimeter, or electronic dosimeter for measuring, registering, or evaluating total accumulated dose or exposure to ionizing radiation.
Drill	A supervised instruction period aimed at testing, developing, and maintaining skills in a particular operation.

Early Phase	The period at the beginning of a nuclear incident when immediate decisions for effective use of protective actions are required and must be based primarily on predictions of radiological conditions in the environment. This phase may last from hours to days. For the purposes of dose projections, it is assumed to last four days.
Emergency action level	A predetermined, site-specific, observable threshold for a plant initiating condition that places the plant in a given emergency class. An emergency action level (EAL) can be an instrument reading; an equipment status indicator; a measurable parameter (on-site or off-site); a discrete, observable event; or another phenomenon which, if it occurs, indicates entry into a particular emergency class.
Emergency alert system	A network of broadcast stations and interconnecting facilities which have been authorized by the Federal Communications Commission to operate in a controlled manner during a war, state of public peril or disaster, or other national or local emergency. In the event of a nuclear reactor accident, instructions/notifications to the public on conditions or protective actions would be broadcast by state or local government authorities on the emergency alert system (EAS).
Emergency Director	The director of the facility in command and control. One of the following: the Acting Station Director, Station Director or the Manager of the emergency operations facility (EOF).
Emergency notification system	The USNRC emergency notification system (ENS) hot line is a dedicated telephone system that connects the plant with USNRC headquarters in White Flint, Maryland. It is directly used for reporting emergency conditions to USNRC personnel.
Emergency operating procedures	The emergency operating procedures (EOPs) are step-by-step procedures for direct actions taken by licensed operators to mitigate and/or correct an off normal plant condition through the control of plant systems.

Emergency operations center	A facility designed and equipped for effective coordination and control of emergency operations carried out within an organization's jurisdiction. The emergency operations center (EOC) is the site from which civil government officials (municipal, county, state, and federal) exercise direction and control in a civil defense emergency.
Emergency personnel	Those organizational groups that perform a functional role during an emergency condition. Within EGC, emergency personnel include the managers and directors of the ERO, accident assessment personnel, radiological monitoring teams, fire brigades, first aid teams and security personnel.
Emergency planning zone	That area surrounding a nuclear station in which emergency planning is conducted for the protection of the public. With respect to protecting the public from the plume exposure resulting from an incident, the emergency planning zone (EPZ) is usually an area with a radius of about 10-mi surrounding the facility. With respect to the ingestion exposure pathway, the EPZ is usually an area with a radius of about 50 mi.
Emergency preparedness	A state of readiness that provides reasonable assurance that adequate protective measures can and will be taken upon implementation of the emergency plan in the event of a radiological emergency.
Emergency response data system	Emergency response data system is a direct near real-time electronic data link between the licensee's on-site computer system and the USNRC Operations Center that provides for the automated transmission of a limited data set of selected parameters.
Essential personnel	Essential personnel are those needed to achieve the goals and tasks as deemed necessary by the Emergency Director.

Evacuation	The urgent removal of people from an area to avoid or reduce high level, short-term exposure usually from the plume or from deposited activity.
Exclusion area	An exclusion area is an area specified for the purpose of reactor site evaluation in accordance with 10 CFR 100. It is an area of such size that an individual located at any point on its boundary for two hours immediately following onset of the postulated release would not receive a total radiation dose to the whole body in excess of 25 rem or a total radiation dose of 300 rem to the thyroid from iodine exposure.
Exercise	An event that tests the integrated capability of a major portion of the basic elements existing within emergency preparedness plans and organizations.
Field monitoring	The use of radiological instruments or sample collecting devices to measure and assess background radiation levels and/or the extent and magnitude of radiological contamination in the environment around the plant. This may be done in various stages such as preoperational, operational, emergency, and post-operational.
Hazardous material	A substance or material which has been determined by the U.S. Secretary of Transportation to be capable of posing an unreasonable risk to health, safety, and property when transported in commerce, and which has been so designated in 49 CFR 172.

Health physics network	In the event of a Site Area Emergency, the USNRC health physics network (HPN) line will be activated by the USNRC Operations center in White Flint, Maryland. This phone is part of a network that includes the USNRC Regional Office and the USNRC Operations Headquarters in White Flint, Maryland. This system is dedicated to the transmittal of radiological information by plant personnel to USNRC Operations Center and the Regional office. HPN phones are located in the technical support center (TSC) and emergency operations facility (EOF).
Imminent	Mitigation actions have been ineffective and trended information indicates that the event or condition will occur within 2 hours.
Ingestion pathway	The potential pathway of radioactive materials to the public through consumption of radiologically contaminated water and foods such as milk or fresh vegetables. Around a nuclear power plant this is usually described in connection with the 50-mi EPZ.
Initiating condition	A predetermined Unit condition where either the potential exists for a radiological emergency or such an emergency has occurred.
Joint Public Information Center	A corporate emergency facility activated by the Applicant and staffed by EGC, state, and federal public information personnel. This facility serves as the single point of contact for the media and public to obtain information about an emergency.
Major features of the emergency plans	Also referred to as Option 1, these include the exact sizes of the emergency planning zones (EPZs) and other features as described in Section V of NUREG-0654 Supplement 2. (NUREG-0654 FEMA-REP-1 Revision 1, Supplement 2 [Draft Report for Comment] April, 1996, Section I. D.4.)

Mandatory requirement	Though not defined, this is stated in 10 CFR 52 and NUREG-0654 Supplement 2: An ESP application must identify physical characteristics unique to the proposed site, such as egress limitations from the area surrounding the site that could pose a significant impediment to the development of emergency plans. The USNRC shall determine, after consultation with FEMA, whether this information shows that there is no significant impediment to the development of emergency plans. (NUREG-0654 FEMA-REP-1 Revision 1, Supplement 2 [Draft Report for Comment] April, 1996, Section I. E.) For the mandatory requirement and Option 1, the application must include a description of contacts and arrangements made with local, state, and federal agencies with emergency planning responsibilities. (NUREG-0654 FEMA-REP-1 Revision 1, Supplement 2 [Draft Report for Comment] April, 1996, Section I. E.) The descriptions should include the name and location of the organization contacted, the title and/or position of the person(s) contacted, and the role of the organization in emergency planning. (NUREG-0654 FEMA-REP-1 Revision 1, Supplement 2 [Draft Report for Comment] April, 1996, Section II. B.)
Non-Essential Site Personnel	Those personnel not needed for the continuing existence or functioning of the emergency response organization (ERO). They are personnel not required to fill certain positions in the ERO. Identification of non-essential personnel is circumstance-oriented as determined by the Emergency Director.
Off–Site	The area around a nuclear generating station that lies outside the station's "site boundary."
On-Site	The area around a nuclear generating station that lies within the station's "site boundary."
Operations support center	An emergency response facility at the plant to which support personnel report and stand by for deployment in an emergency situation.

Personnel monitoring	The determination of the degree of radioactive contamination on individuals using standard survey meters, and/or the determination of dosage received by means of dosimetry devices.
Plume exposure pathway	The potential pathway of radioactive materials to the public through (1) whole body external exposure from the plume and from deposited materials; and (2) inhalation of radioactive materials.
Population-at-Risk	Those persons for whom protective actions are being or would be taken. In the 10-mi emergency planning zone (EPZ), the population-at-risk consists of resident population, transient population, special facility population, and industrial population.
Population center	A densely populated area containing more than about 25,000 residents.
Potassium iodide	A chemical compound that readily enters the thyroid gland when ingested. If taken in a sufficient quantity prior to exposure to radioactive iodine, potassium iodide (KI) can prevent the thyroid from absorbing any of the potentially harmful radioactive Iodine-131.
Potential	Mitigation actions are not effective and trended information indicates that the parameters are outside desirable bands and not stable or improving.
Projected dose	The calculated dose that some individuals in the population group may receive if no protective actions are implemented. Projected doses are calculated to establish an upper limit boundary.
Protected area	That on-site area within the security boundary as defined in each station's Security Plan.

Protective action	Those emergency measures taken for the purpose of preventing or minimizing radiological exposures to affected population groups.
Protective action guide	Projected radiological dose values to individuals in the general population that warrant protective action. Protective action guides (PAGs) are criteria used to determine if the general population needs protective action regarding projected radiological doses, or from actual committed (measured) dose values.
Protective action recommendation	Recommended action to the state for the protection of the off-site public from whole body external gamma radiation, and inhalation and ingestion of radioactive materials. The protective action recommendation (PAR) issued is evacuate. Access control and other recommendations concerning the safeguards of affected food chain processes may be issued by the states as PARs.
Public Alerting/Warning	The process of signaling the public, as with sirens, to turn on their televisions or radios and listen for information or instructions broadcast by state or local government authorities on the emergency alert system (EAS).
Public notification	Public notification means to communicate instructions on the nature of an incident that prompted the public alerting/warning and on protective or precautionary actions that should be taken by the recipients of the alert. A state and local government process for providing information promptly to the public over radio and television at the time of activating the alerting (warning) signal (sirens). Initial notifications of the public might include instructions to stay inside, close windows and doors, and listen to radio and television for further instructions. Commercial broadcast messages are the primary means for advising the general public of the conditions of any nuclear accident. (See Emergency Alert System.)

Recovery	The process of reducing radiation exposure rates and concentrations of radioactive material in the environment to levels acceptable for unconditional occupancy or use.
Release	A 'Release in Progress' is defined as any radioactive release that is a result of, or associated with, the emergency event.
Restricted area	Any area, to which access is controlled by the Applicant for purposes of protection of individuals from exposure to radiation and radioactive materials.
Shall, Should, and May	The word "shall" is used to denote a requirement, the word "should" to denote a recommendation and the word "may" to denote permission, neither a requirement nor a recommendation.
Shielding	Any material or barrier that attenuates (stops or reduces the intensity of) radiation.
Significant impediment	A physical characteristic or combination of physical characteristics that would pose major difficulties for an evacuation or the taking of other protective actions as addressed in Section II "Early Site Permits - Identification of Physical Characteristics" of NUREG-0654 Supplement 2. That section states that the ESP application must identify physical characteristics unique to the proposed site, such as egress limitations from the area surrounding the proposed site, which could pose a significant impediment to the development of emergency plans. It goes on to state that an ESP applicant may identify such unique physical characteristics by performing a preliminary evacuation time estimate within the plume exposure EPZ for transient and permanent populations, noting major impediments to the evacuation or the taking of other protective actions. (NUREG-0654 FEMA-REP-1 Revision 1, Supplement 2 [Draft Report for Comment] April, 1996, Sections I. D.2. and II.)

Site boundary	The site boundary is company-owned property on which a nuclear station is located and may include EGC leased lands adjacent to that nuclear station. Each nuclear station's site boundary is described in detail in the off-site dose calculation manual (ODCM).
Site evacuation	The evacuation of non-essential personnel from the plant site.
Source term	Radioisotope inventory of the reactor core, or amount of radioisotope released to the environment, often as a function of time.
Technical support center	A center outside of the control room (CR) in which information is supplied on the status of the plant to those individuals who are knowledgeable or responsible for engineering and management support of reactor operations in the event of an emergency, and to those persons who are responsible for management of the on-site emergency response.
Threshold value	Measurable, observable detailed conditions, which must be satisfied to determine an emergency action level (EAL) applicability.
Thyroid blocking agent	An agent which when properly administered to an individual will result in sufficient accumulation of stable iodine in the thyroid to prevent significant uptake of radioiodine. Potassium iodide is such an agent.
Total effective dose equivalent	The sum of the deep dose equivalent (for external exposure) and the committed effective dose equivalent (for internal exposure) and four days of deposition exposure.
Vital area	An area within the station security fence which contains vital equipment. Examples include CR, containment/reactor building, turbine building and electrical equipment room.

APPENDIX A

Contacts and Arrangements

Organization/Agreement Type	Expiration Date
DOE Radiation Emergency Assistance Center/Training Site, REAC/TS (Letter on File) Medical Consultant	June 13, 2004
Environmental, Inc. (P.O.) Radiological Environmental Monitoring	April 30, 2005
Framatome Technologies Co. (P.O.) Post-Accident Sampling	December 31, 2003
INC Worldwide Dosimetry Service (P.O.) Emergency Dosimetry	December 31, 2003
Institute of Nuclear Power Operations (Letter on File) Emergency Event Support	Living Letter (until terminated in writing)
Murray & Trettel, Inc. (P.O.) Meteorological Support	June 30, 2005
Teledyne Brown Engineering (P.O.) Bioassay Analysis/Radiochemical Analysis	February 27, 2004
John Warner Hospital and Ambulance Service Medical Support	November 15, 2004
Decatur Memorial Hospital Medical Support	November 15, 2004
DeWitt County Sheriff's Department Traffic Control, Law Enforcement	January 21, 2005
Clinton Fire Department Fire Response	November 14, 2004
Illinois Department of Nuclear Safety	None
Illinois Emergency Management Agency	None

Exelon Nuclear

Exelon Generation
4300 Winfield Road
Warrenville, IL 60555

www.exeloncorp.com

December 9, 2002

Mr. Michael Chamness, Director
Illinois Emergency Management Agency
110 East Adams Street
Springfield, Illinois 62701-1109

Dear Mr. Chamness:

This is to request your commitment in support of the Exelon Generation Company, LLC (Exelon) Early Site Permit Application pursuant to 10 CFR 52, "Early Site Permits; Standard Design Certification, and Combined Licenses for Nuclear Power Plants."

The Exelon Corporation intends to submit an Early Site Permit Application during 2003 for a site on the AmerGen Clinton Station property. One part of that application will be a Major Features Emergency Plan, as defined in 10 CFR 52 and under guidance provided in NUREG-0654 FEMA-REP-1, Revision 1, "Criteria for Preparation and Evaluation of Radiological Emergency Response Plans and Preparedness in Support of Nuclear Power Plants", Supplement 2. Sections III and V of that guidance document state that the application include a description of contacts and arrangements made with local and State agencies with emergency planning responsibilities. Contacts are being accomplished by this written correspondence; arrangements are the plans and commitments already in place to protect public health and safety in case of a nuclear accident.

The Emergency Plan portion of Exelon's application will take credit for the Illinois Plan for Radiological Accidents (IPRA), Volumes I and VIII. In doing so, all of the State and local requirements described in the planning standards and evaluation criteria of NUREG-0654 FEMA-REP-1, Revision 1, Supplement 2 are fulfilled. The IPRA contains commitments of acknowledgement of duties, responsibilities and relationships of persons of authority in the counties and towns within the Clinton Station 10 mile emergency planning zone (the County Board Chairmen of DeWitt, McLean, Macon and Piatt Counties and the Mayors of Clinton, Weldon, Wapella and DeWitt). Exelon's application takes credit for those arrangements.

In completing the Emergency Plan portion of the Early Site Permit application, Exelon has concluded that this process provides no additional requirements to the

established emergency plans for evacuation or the implementation of other protective actions.

I have enclosed two original letters. Please sign both, retain one for your files and return one to me. Your signature will attest to your awareness of Exelon's intent to take credit for the existing IRPA Volumes I and VIII in an Early Site Permit Application and your concurrence that there are no significant impediments to implementing an emergency plan for the Early Site Permit plant.

Exelon is sending an equivalent letter to Mr. Tom Ortciger, Director of the Illinois Department of Nuclear Safety, asking for his similar attestation. Once these letters have been signed, copies will be provided to the County and Town officials mentioned herein and will be included in Appendix A to the Exelon Early Site Permit Emergency Plan.

Respectfully,

Jeffrey A. Benjamin
Vice President
Licensing & Regulatory Affairs

Concur:
Michael Chamness, Director
Illinois Emergency Management Agency

Cc: Thomas Mundy

Exelon Generation
4300 Winfield Road
-nville, IL 60555

www.exeloncorp.com

Exelon Nuclear

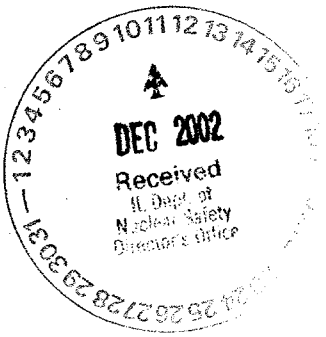

December 9, 2002

Mr. Thomas W. Ortciger, Director
Illinois Department of Nuclear Safety
1035 Outer Park Drive
Springfield, Illinois 62704

Dear Mr. Ortciger:

This is to request your commitment in support of the Exelon Generation Company, LLC (Exelon) Early Site Permit Application pursuant to 10 CFR 52, "Early Site Permits; Standard Design Certifications and Combined Licenses for Nuclear Power Plants."

The Exelon Corporation intends to submit an Early Site Permit Application during 2003 for a site on the AmerGen Clinton Station property. One part of that application will be a Major Features Emergency Plan, as defined in 10 CFR 52 and under guidance provided in NUREG-0654 FEMA-REP-1, Revision 1, "Criteria for Preparation and Evaluation of Radiological Emergency Response Plans and Preparedness in Support of Nuclear Power Plants", Supplement 2. Sections III and V of that guidance document state that the application include a description of contacts and arrangements made with local and State agencies with emergency planning responsibilities. Contacts are being accomplished by this written correspondence; arrangements are the plans and commitments already in place to protect public health and safety in case of a nuclear accident.

The Emergency Plan portion of Exelon's application will take credit for the Illinois Plan for Radiological Accidents (IPRA), Volumes I and VIII. In doing so, all of the State and local requirements described in the planning standards and evaluation criteria of NUREG-0654 FEMA-REP-1, Revision 1, Supplement 2 are fulfilled. The IPRA contains commitments of acknowledgement of duties, responsibilities and relationships of persons of authority in the counties and towns within the Clinton Station 10 mile emergency planning zone (the County Board Chairmen of DeWitt, McLean, Macon and Piatt Counties and the Mayors of Clinton, Weldon, Wapella and DeWitt). Exelon's application similarly takes credit for those arrangements.

In completing the Emergency Plan portion of the Early Site Permit application, Exelon has concluded that this process provides no additional requirements to the established emergency plans for evacuation or the implementation of other protective actions.

I have enclosed two original letters. Please sign both, retain one for your files and return one to me. Your signature will attest to your awareness of Exelon's intent to take credit for the existing IRPA Volumes I and VIII in an Early Site Permit Application and your concurrence that there are no significant impediments to implementing an emergency plan for the Early Site Permit plant.

Exelon is sending an equivalent letter to Mr. Mike Chamness, Director of the Illinois Emergency Management Agency, asking for his similar attestation. Once these letters have been signed, copies will be provided to the County and Town officials mentioned herein and will be included in Appendix A to the Exelon Early Site Permit Emergency Plan.

Respectfully,

Jeffrey A. Benjamin
Vice President
Licensing & Regulatory Affairs

Concur:
Thomas W. Ortciger
Director
Illinois Department of Nuclear Safety

Cc: Thomas Mundy

AmerGen
An Exelon/British Energy Company

Clinton Power Station
R.R. 3 Box 228
Clinton, IL 61727-9351

11-27-02

November 15, 2002

Sally Waite
John Warner Hospital
422 West White Street
Clinton, IL 61727

Dear Ms. Waite,

Title 10 of the Code of Federal Regulations Part 50, Appendix E, contains requirements for preparation of emergency plans for nuclear power facilities. Included in this regulation is the requirement to obtain agreements with offsite agencies, verifying their willingness to respond to the needs of the station in the event of an emergency. Our Emergency Plan requires written verification of this support every two years.

As one of our support agencies, we request your continued support of providing ambulance service and acting as the supporting medical facility for Clinton Power Station in the event of an emergency. Please sign and return the enclosed copy of this letter to confirm you agency's support. A self-addressed stamped envelope is enclosed for you convenience.

This agreement will be in effect through 2004.

If you have any questions, please contact Mark Friedmann, Emergency Preparedness Coordinator, at 217-937-4833. Thank you for your continued support of Clinton Power Station.

Sincerely,

Keith J. Polson
Plant Manger

cc: EP File

Signature & Date Sally Kay Waite

Title Interim CEO

Representing John Warner Hospital

AmerGen
An Exelon/British Energy Company

Clinton Power Station
R.R. 3 Box 228
Clinton, IL 61727-9351

November 14, 2002

Mr. Dan Ballinger
Health & Safety Commissioner
Clinton, IL

Dear Mr. Ballinger,

Title 10 of the Code of Federal Regulations Part 50, Appendix E. contains requirements for preparation of emergency plans for nuclear power facilities. Included in this regulation is the requirement to obtain agreements with offsite agencies, verifying their willingness to respond to the needs of the station in the event of an emergency. Our Emergency Plan requires written verification of this support every two years.

As one of our support agencies, we request your continued support of providing fire protection, as set forth in our existing contract. Please sign and return the enclosed copy of this letter to confirm Clinton Fire Department's support. The return fax number is 217-937-4829.

This agreement will be in effect through 2004.

Additionally, we extend our offer to acquaint the individuals from your agency with Clinton Power Station and provide training in radiation safety and emergency planning. At your request, we would be glad to provide the training and a site familiarization tour.

If you have any questions or would like to arrange for training, please contact Mark Friedmann, Emergency Preparedness Coordinator, at 217-937-4833. Thank you for your continued support of Clinton Power Station.

Sincerely,

Keith J. Polson
Plant Manger

Daniel C. Ballinger
Commissioner Health & Safety

AmerGen

An Exelon Company

Clinton Power Station
R. R. 3, Box 228
Clinton, IL 61727

January 21, 2004

Sheriff Roger W. Massey
DeWitt County Sheriff's Department
101 W. Washington
Clinton, IL 61727

Dear Sheriff Massey:

Clinton Power Station has a commitment to the Nuclear Regulatory Commission to annually review and update the letter of agreement with the local law enforcement agency. Accordingly, I have enclosed a copy of the current letter of agreement between Clinton Power Station and the Sheriff, DeWitt County, Illinois, for your review. If you still concur with the agreement, please sign in the space provided on the annual review of the agreement statement and return it to C. S. Williamson, Manager- Nuclear Security, at the Clinton Power Station. If you have any questions or comments, please feel free to contact me or Mr. Jay Waddell.

We appreciate your cooperation and support and look forward to continuing this excellent working relationship in the future.

The enclosed agreement has been classified as Safeguards Information in accordance with Title 10, Code of Federal Regulation, Part 73.21. Please protect this information against unauthorized disclosure.

Sincerely,

Charles S. Williamson

C. S. Williamson
Manager – Nuclear Security

CSW/cf

Enclosure

REV2

ANNUAL REVIEW
OF THE AGREEMENT BETWEEN CLINTON POWER STATION
AND THE SHERIFF, DEWITT COUNTY, ILLINOIS

I have reviewed the enclosed agreement and find it to be an acceptable and workable document as it is currently written.

Clinton Power Station

Date: 01/21/04

By: Charles S Williamson
C. S. Williamson
Manager – Nuclear Security

Date: 01/27/04

By: Roger W Massey
Roger W. Massey, Sheriff
DeWitt County, Illinois

AmerGen
An Exelon/British Energy Company

Clinton Power Station
R.R. 3 Box 228
Clinton, IL 61727-9351

November 15, 2002

Carol Hendrian
Decatur Memorial Hospital
2300 North Edward Street
Decatur, IL 62526

Dear Ms. Hendrian,

Title 10 of the Code of Federal Regulations Part 50, Appendix E, contains requirements for preparation of emergency plans for nuclear power facilities. Included in this regulation is the requirement to obtain agreements with offsite agencies, verifying their willingness to respond to the needs of the station in the event of an emergency. Our Emergency Plan requires written verification of this support every two years.

As one of our support agencies, we request your continued support of acting as a supporting medical facility for Clinton Power Station in the event of an emergency. Please sign and return the enclosed copy of this letter to confirm you agency's support. A self-addressed stamped envelope is enclosed for you convenience.

This agreement will be in effect through 2004.

Additionally, we extend our offer to acquaint the individuals from your agency with Clinton Power Station and provide training in radiation safety and emergency planning. At your request, we would be glad to provide the training and a site familiarization tour.

If you have any questions or would like to arrange for training, please contact Mark Friedmann, at 217-937-4833. Thank you for your continued support of Clinton Power Station.

Sincerely,

Keith J. Polson

Keith J. Polson
Plant Manger

cc: EP File

Signature & Date Timothy D. Stone Jr

Title Chief Operating Officer

Representing Decatur Memorial Hospital

REV2

APPENDIX B

Requirements Matrix

TABLE B-1
Requirements Matrix

Code	Guidance	Requirement	Planning Standard	Evaluation Criteria	ESP	Illinois[a]	DeWitt[b]
10 CFR 52.17 (b) (1)	None	The application must identify physical characteristics unique to the proposed site, such as egress limitations from the area surrounding the site that could impose a significant impediment to the development of emergency plans.	None	None	2.3; 2.4	NR[c]	1A
10 CFR 52.17(b)(2)(i)	NUREG-0654 REV 1, SUPPLEMENT 2, Section III	The application may also propose major features of the emergency plans, such as the exact sizes of the EPZs that can be reviewed and approved by the USNRC in consultation with FEMA in the absence of complete and integrated emergency plans.			1.1; 2.2	NR	NR
10 CFR 52.17(b)(3)	NUREG-0654 REV 1, SUPPLEMENT 2, Section III C	Description of contacts and arrangements made with local, state, and federal government agencies with emergency planning responsibilities	Include the name and location of the organization contacted, the title and/or position of the person contacted, and the role of the organization in emergency planning. Additional guidance concerning contacts and arrangements for this option of the rule from Section V planning standards and evaluation criteria.		3.1, 3.2, 3.4 Appendix A; IPRA Vol. I by ref.	NR	NR

TABLE B-1
Requirements Matrix

Code	Guidance	Requirement	Planning Standard	Evaluation Criteria	ESP	Illinois[a]	DeWitt[b]
10 CFR 50.47		Emergency Planning Zones			2.2	NR	1A
10 CFR 50.47		Plume Exposure Pathway			2.2	NR	NR
10 CFR 52.17(b)(2)(i) 10 CFR 50.47(b)(1) 10 CFR 50 APP E IV (A)	NUREG-0654 REV 1, SUPPLEMENT 2, Section V	A. Assignment of Responsibility (Organization Control)			CH 3		
			Primary responsibilities are identified for emergency response by applicant and by state and local organizations within the EPZ.		CH 3		
				1. Identify the state, local, federal and private sector organizations (including utilities) that are intended to be part of the overall response organization for EPZs. A[d], S[d], L[d]	3.1.1; 3.2; 3.3; 3.4	1F; 1I; 1J; 2A; 2B; 3A; 3B; 3C	1C; 1D; 2B; 2E; 2F; Annexes 2A-2F
				2. a. Each organization shall identify the functions and responsibilities for major elements of ER, such as:			
				Command and control, alerting and notification, communications, public information, accident assessment, public health and sanitation, social services, fire and rescue, traffic control, Emergency Medical Services, law enforcement, transportation protective response, and radiological exposure control	NR but in 3.2; 3.3	1E; 2A; 2B; 3A; 3B; 3C	1D; 2A; 2F; Annexes 2A-2F

TABLE B-1
Requirements Matrix

Code	Guidance	Requirement	Planning Standard	Evaluation Criteria	ESP	Illinois[a]	DeWitt[b]
				The description of these functions may be shown in a table of primary and support responsibilities. S, L		IPRA Command and Coordination Table, Chapter 2, Section B	Figures F.2.b.1; F.2.c.1; F.2.c.2; F.2.c.3; F.2.c.4; F.2.c.5
				2.b. Each application shall contain the legal basis for such authorities, by reference to specific acts, codes or statutes. S, L	NR but in 3.1	Introduction Section A	
				3. Include a description of contacts and arrangements pertaining to the concept of operations developed between F[d], S, and L agencies and other support organizations having an emergency response role within the EPZs. Any written letters of agreement should be included. A signature page in the application may be appropriate for some organizations to signify their agreement. A, S ,L	3.2.3; 3.2.4; 3.2.5; 3.4; Appendix A	Signature Sheet	2 Signature Sheet
10 CFR 52.17(b)(2)(i) 10 CFR 50.47(b)(2) 10 CFR 50 APP E IV (A)	NUREG-0654 REV 1, SUPPLEMENT 2, Section V	B. On-Site Emergency Organization			CH 3		
			Interfaces among various on-site response activities and off-site support and response activities are identified		CH 3		

TABLE B-1
Requirements Matrix

Code	Guidance	Requirement	Planning Standard	Evaluation Criteria	ESP	Illinois[a]	DeWitt[b]
				1. Identify interfaces between and among the on-site functional areas of emergency activity, local services support, and S and L government response organizations. This may be illustrated in a block diagram. A	Figure 3.1-2	NR	NR but in 2; Figure F.2.b.1 Annex 2A Attachment 1
				2. Identify services to be provided by local agencies for handling emergencies (e.g. police, ambulance, medical, hospital, and fire fighting). A description of the arrangements involving these services shall be included in the plan. Any written letters of agreement should also be included. A	3.2.4; 3.2.5; Appendix A	NR	NR but in 2F; 2H; Annexes 2A-2F
10 CFR 52.17(b)(2)(i) 10 CFR 50.4(b)(3) 10 CFR 50 APP E IV (A)	NUREG-0654 REV 1, SUPPLEMENT 2, Section V	C. Emergency Response Support and Resources			CH 3		
			Arrangements for requesting assistance resources are described, and organizations capable of augmenting the planned responses are identified.		3.4		
				1. Each state and ESP applicant shall make provisions for requesting federal assistance through the Federal Radiological Emergency Response Plan. A,S	3.1.1.1.2, 3.1.1.1.4; 3.4.5	3 A(8); 3B	NR

TABLE B-1
Requirements Matrix

Code	Guidance	Requirement	Planning Standard	Evaluation Criteria	ESP	Illinois[a]	DeWitt[b]
				2. Identify radiation labs and their general capabilities and expected availability to provide radiation monitoring and analyses services during an emergency. A,S,L	3.4.3; 3.4.4; 3.4.7; 3.4.8	1E(1); 3A(8)	Included in Illinois Plan
				3. Identify nuclear and other facilities and organizations that can be relied on to provide assistance in an emergency. A,S,L	3.4.1; 3.4.2; 3.4.9; 3.4.10	3A(12); 3C	2F; 2J; 3D; Appendix D; Appendix E; Map C
				4. Include description of the contacts and arrangements made with the response organizations Identified above. A,S,L	Appendix A	Signature Sheet; 3A(12); 3C	2F; 2J; 3D; Appendix D; Appendix E; Map C
10 CFR 52.17(b)(2)(i) 10 CFR 50.47(b)(4) 10 CFR 50 APP E IV (B)	NUREG-0654 REV 1, SUPPLEMENT 2, Section V	D. Emergency Classification System			CH 4		
			A standard emergency classification system is specified.		CH 4		
				1. An emergency classification scheme as set forth in Appendix 1 of NUREG-0654 Revision 1 or Regulatory Guide 1.101 Revision 3 must be established by ESP applicant but need not include plant-specific initiating conditions. A	4.1 - 4.7 and 4.9	NR but in 1C	NR but in 1C
				2. Each S and L organization shall establish an emergency classification system consistent with that established by the ESP applicant. S,L	NR but in 4.10	1C	1C

TABLE B-1
Requirements Matrix

Code	Guidance	Requirement	Planning Standard	Evaluation Criteria	ESP	Illinois[a]	DeWitt[b]
10 CFR 52.17(b)(2)(i) 10 CFR 50.47(b)(5) 10 CFR 50 APP E IV (C,D)	NUREG-0654 REV 1, SUPPLEMENT 2, Section V	E. Notification Methods and Procedures			CH 5		
			The means are established for notification by the ESP applicant of S and L response organizations, and for notification of emergency personnel and the populace within the plume EPZ		CH 5		
				1. Each organization shall describe mutually agreeable bases for notification of response organizations consistent with the emergency classification scheme set forth in Appendix 1 of NUREG-0654 Revision 1. A,S,L			
				2. Each organization shall describe a method for alerting, notifying, and mobilizing emergency response personnel. A,S,L	5.2; 5.3; 5.5	3A; 4A; 4B; 4C; 4D	1C; 1D; 2B; 2C; 2D; Annexes 2A-2F

TABLE B-1
Requirements Matrix

Code	Guidance	Requirement	Planning Standard	Evaluation Criteria	ESP	Illinois[a]	DeWitt[b]
				3. Each organization shall describe the administrative and physical means for notifying and promptly instructing the public within the plume EPZ. A,S,L	5.5.1; 5.5.2	1G	2A; Annexes 2A-2F
10 CFR 52.17(b)(2)(i) 10 CFR 50.47(b)(6) 10 CFR 50 APP E IV (D)	NUREG-0654 REV 1, SUPPLEMENT 2, Section V	F. Emergency Communications			CH 6		
			Provisions are provided for prompt communications among principal response organizations to emergency personnel and to the public.		CH 6		
				1. The communication plans for emergencies shall describe:			
				a. Provision for communications with contiguous S and L governments within the EPZ. A,S,L	6.1	1J; 3A; 4A; 4B;	2G; Annexes 2A-2F; Appendix A
				b. Provision for communications as needed with Federal emergency response organizations. A,S,L	6.1 ERDS 6.1.8	2B; 3A(3); 3A(8)	IPRA Volume 1; Appendix A

TABLE B-1
Requirements Matrix

Code	Guidance	Requirement	Planning Standard	Evaluation Criteria	ESP	Illinois[a]	DeWitt[b]
				c. Provision for alerting and activating e personnel within each response organization. A,S,L	6.2	3A	Annexes 2A-2F; 1C; 1D
				2. The communication arrangement for fixed and mobile medical support facilities shall be described A,S,L	6.4	3A(9)	2G; Annexes 2A-2F; Appendix A
10 CFR 52.17(b)(2)(i) 10 CFR 50.47(b)(7)	NUREG-0654 REV 1, SUPPLEMENT 2, Section V	G. Public Education and Information			CH 7		
			An emergency information program for the public and news media is described to address: (1) the provision of information to the public, on a periodic basis, on how they will be notified and what initial actions should be taken in an emergency; and (2) the means for acquainting the news media with emergency information.		CH 7		
				1. Each organization shall describe a program to provide a coordinated dissemination of information to the public on a periodic basis (at least annually) regarding how they will be notified and what their actions should be in an emergency. This program should include information on:			

TABLE B-1
Requirements Matrix

Code	Guidance	Requirement	Planning Standard	Evaluation Criteria	ESP	Illinois[a]	DeWitt[b]
				Educational information on radiation	7.1	5C	2K
				Contact for additional information	7.1	5C	2K
				Protective measures, e.g. evacuation routes and relocation centers, sheltering, respiratory protection, radioprotection drugs	7.1; 7.2	5C	2K
				Special needs of the handicapped and transient population	7.1	5C	2K
				Means for accomplishing this dissemination may include, but are not limited to: information in the telephone book, periodic information in utility bills, posting in public areas, and publications distributed on an annual basis. A,S,L	7.1	5C	2K
				2. Each organization shall describe a program for acquainting news media on a periodic basis (at least annually) with the emergency plans, information concerning radiation, and points of contact for release of public information in an emergency. A,S,L	7.5	5D	2K
10 CFR 52.17(b)(2)(i) 10 CFR 50.47(b)(8) 10 CFR 50 APP E IV (E)	NUREG-0654 REV 1, SUPPLEMENT 2, Section V	H. Emergency Facilities and Equipment			CH 8		

TABLE B-1
Requirements Matrix

Code	Guidance	Requirement	Planning Standard	Evaluation Criteria	ESP	Illinois[a]	DeWitt[b]
			Adequate emergency facilities and equipment to support the emergency response are described.		CH 8		
				1. Each applicant shall describe a TSC and an OSC in accordance with NUREG-0696 "Functional Criteria for ER Facilities," Feb. 1981. A	8.1	NR	NR
				2. Describe an EOF from which evaluation and coordination of all licensee (applicant) activities related to an emergency is to be carried out and from which the licensee (applicant) shall provide information to F, S, and L authorities responding to emergencies in accordance with NUREG 0696. A	8.2	NR	NR
				3. Each off-site organization shall describe an EOC for use in directing and controlling response functions. S,L	NR but in 8.3	1F(1)	1C; 2E
10 CFR 52.17(b)(2)(i) 10 CFR 50.47(b)(9) 10 CFR 50 APP E IV (B)	NUREG-0654 REV 1, SUPPLEMENT 2, Section V	I. Accident Assessment			CH 9		
			Adequate methods, systems and equipment are described for assessing and monitoring actual or potential off-site consequences of a radiological emergency condition.		CH 9		

TABLE B-1
Requirements Matrix

Code	Guidance	Requirement	Planning Standard	Evaluation Criteria	ESP	Illinois[a]	DeWitt[b]
				1. Provide a description of the contacts and arrangements made with off-site organizations for acquiring and evaluating met information. Describe how suitable met data will be made available to the State. A	3.1.1.1.7; 9.1.3; APP A	NR but in 1(E) & 3A(8)	1D; 2F and 2O
				2. Describe the contacts and arrangements made for field monitoring within the plume exposure EPZ. A,S,L	9.2; 9.2.3	3A(4)	Included in Illinois Plan at 3a(4)
				3. Contacts and arrangements to locate and track airborne radioactive plume, using either or both F and S resources, shall be described. A,S	9.2; 9.2.1; 9.2.3	1E; 3A(8)	NR but Included in Illinois State Plan at 3A(8)
10 CFR 52.17(b)(2)(i) 10 CFR 50.47(b)(10) 10 CFR 50 APP E IV (B)	NUREG-0654 REV 1, SUPPLEMENT 2, Section V	J. Protective Response			CH 10		
			A range of protective actions is described for the plume exposure pathway EPZ for the public and emergency workers. Guidelines for the choice of protective actions during an emergency, consistent with federal guidance, and protective actions for the ingestion exposure pathway EPZ appropriate to the locale are described.		CH 10		

TABLE B-1
Requirements Matrix

Code	Guidance	Requirement	Planning Standard	Evaluation Criteria	ESP	Illinois[a]	DeWitt[b]
				1. Describe the evacuation routes and transportation for on-site individuals to some suitable off-site location, including alternatives for inclement weather, high traffic density, and specific radiological conditions. A,S,L	10.1.3	Not Applicable	Clinton Power Station Emergency Plan
				2. Describe a mechanism for recommending protective actions to the appropriate S and L authorities IAW the Manual of PAGs and Protective Actions for Nuclear Incidents (EPA 400-R-92-001). A	10.1.6; 10.2	NR	NR
				3. Prepare ETE within plume exposure EPZ in accordance with Appendix 4 of 0654 Revision 1. A	2.3; Table 2.3-5	NR	NR
				4. Each organization concept for implementing protective measures for the plume EPZ shall be described, including items such as those listed below, if available. Where appropriate, a description of contacts and arrangements made with off-site agencies with emergency planning responsibilities must be included	10.1.3; 10.1.7; 10.1.8; Figure 10.2-1 Appendix A	1E(4)	2J
				a. Maps showing evacuation routes, evacuation areas, shelter areas, and relocation centers in host areas. A,S,L	Figs. 2.2-1; 2.3-1	Site-specific volumes	1E; Map A; Map B; Map C; Map D Map D
				b. Maps showing population districts around site. This shall be by evacuation areas. Each applicant shall also present the information in a sector format. A,S,L	Fig. 2.2-2 Fig. 2.3-2	Site-specific volumes	1A; Table1; Maps A-C

TABLE B-1
Requirements Matrix

Code	Guidance	Requirement	Planning Standard	Evaluation Criteria	ESP	Illinois[a]	DeWitt[b]
				c. Proposed means for notifying all segments of the transient and resident population. A,S,L	~~5.2.1~~10.1	1E(4); 1G	1C; 2A; Annexes 2A-2F
				d. Proposed means for protecting those persons whose mobility may be impaired (e.g., institution or other confinement). S,L	NR	5C	2 J ; 3B; Annexes 2A-2F
				e. Proposed means for the use of KI for emergency workers and institutionalized persons within the plume EPZ whose immediate evacuation may be infeasible or very difficult. S,L	NR but in 10.1.5.3	1E(4)	1D; 2O; Annexes 2A-2F
				f. Proposed means of relocation. S,L	NR	1E(4)	2J; Annexes 2A-2F; Appendix C;
				g. Potential relocation centers in host areas, which are at least 5 mi, and preferably 10 mi, beyond the boundaries of the plume EPZ. S,L	NR but in 10.3	Site-specific volumes	Map C
				h. Projected traffic capacities of evacuation routes under emergency conditions. S,L	NR but in 2.3	Evacuation Time Estimates	Evacuation Time Estimates
				i. Control of access to evacuated areas and organization responsibilities for such control. S,L	NR	1E(4); 3A(2); 3A(6); 3A(7)	1D; Appendix B; Annexes 2A-2F; Map A

TABLE B-1
Requirements Matrix

Code	Guidance	Requirement	Planning Standard	Evaluation Criteria	ESP	Illinois[a]	DeWitt[b]
				j. Identification of and means for dealing with potential impediments (e.g., seasonable impassability of roads) to use of evacuation routes and contingency measures. S,L	NR	3A(6); 3A(7); 3A(11)	1D; Annexes 2A-2F
				k. Time estimates for evacuation of various sectors and distances based on a dynamic analysis (time-motion study under various conditions) for the plume EPZ (see Appendix 4 of 0654 Revision 1 and Section II of 0654 Revision 1 Supplement 2). S,L	NR but in 2.3, Table 2.3-5	Evacuation Time Estimates	Evacuation Time Estimates
				l. The basis for the choice of recommended PAs from the plume exposure pathway during emergency conditions. This shall include expected local protection afforded in residential units or other shelter for direct and inhalation exposure, as well as evacuation time estimates. S,L	NR but in 2.3, Table 2.3-5; 10.2; Figure 10.2-1	1E(4)	See IPRA Volume 1
				5. Describe the means for registering and monitoring evacuees at reception centers in host areas. S,L	NR but in 10.3	1E(5)(b); 3C(1)	2J(3) (f); 2J(4)
10 CFR 52.17(b)(2)(i) 10 CFR 50.47(b)(11)	NUREG-0654 REV 1, SUPPLEMENT 2, Section V	K. Radiological Exposure Control			CH 11		
			Means are described for controlling radiation exposure to emergency workers in an emergency.		CH 11		

TABLE B-1
Requirements Matrix

Code	Guidance	Requirement	Planning Standard	Evaluation Criteria	ESP	Illinois[a]	DeWitt[b]
				1. Describe guidelines on dose limits for:	11.2; Table 11.1-1	NR	NR but in 2O(2)
				a. Removal of injured persons.	11.1; 11.2	NR	NR but in 2O(2)
				b. Undertaking corrective actions.	11.1; 11.2	NR	NR but in 2O(2)
				c. Performing assessment actions.	11.1; 11.2	NR	NR but in 2O(2)
				d. Performing field radiological measurements in the plume EPZ.	11.1; 11.2	NR	NR but in 2O(2)
				e. Providing first aid.	11.1; 11.2	NR	NR but in 2O(2)
				f. Performing personnel decontamination.	11.1; 11.2	NR	NR but in 2O(2)
				g. Providing ambulance service.	11.1; 11.2	NR	NR but in 2O(2)
				h. Providing medical treatment services. A	11.1; 11.2	NR	NR but in 2O(2)
				2. Describe an on-site radiation protection program to be implemented during emergencies, including methods to implement dose limits. General guidance on dose limits for workers performing emergency services can be found in EPA 400-R-92-001. A	11.1; 11.2	NR	NR
				3.a. Describe how to determine doses received by emergency personnel involved in any nuclear accident, including volunteers. A,S,L	11.2.1	1E(5) (b)	1D; 2O; Annexes 2A-2F

TABLE B-1
Requirements Matrix

Code	Guidance	Requirement	Planning Standard	Evaluation Criteria	ESP	Illinois[a]	DeWitt[b]
				3.b. Describe how to acquire and distribute dosimeters, both direct reading and permanent record devices. A,S,L	11.2.1	1E(5) (b)	1D; 2O(1); Annexes 2A-2F
				4. Describe a decision chain for authorizing emergency workers to incur exposures in excess of the EPA dose limits for workers performing emergency services. A,S,L	11.1	1E(4); 3A(8)	Included in Illinois Plan at 1E(4); 3A(8)
				5.a. Specify action levels for determining the need for decontamination of emergency workers, equipment and vehicles, and the general public and their possessions. A,S,L	11.2.3; 11.2.5	1E(5) (b); 3A(8)	Included in Illinois Plan at 1E(5) (b); 3A(8)
				5.b. Describe a means for decontamination of emergency personnel wounds, supplies, instruments and equipment. A,S,L	11.2.3; 11.2.4	1E(5) (b); 3A(8)	2A; 2O(4); Annexes 2A-2F
10 CFR 52.17(b)(2)(i) 10 CFR 50.47(b)(12)	NUREG-0654 REV 1, SUPPLEMENT 2, Section V	L. Medical and Public Health Support			CH 12		
			Contacts and arrangements are described for medical services for contaminated injured individuals.		CH 12		
				1. Describe the contacts and arrangements made for local and backup hospitals and medical services having the capability for evaluation of radiation exposure and uptake. A,S,L	3.4.5; 12.1;12.3; APP A	Included in Local Plan at 1H; 2A	2A

TABLE B-1
Requirements Matrix

Code	Guidance	Requirement	Planning Standard	Evaluation Criteria	ESP	Illinois[a]	DeWitt[b]
				2. Each state shall develop lists indicating the location of public, private, and military hospitals and other emergency medical services facilities within the state or contiguous states considered capable of providing medical support for any contaminated injured individual. The listing shall include the name, location, type of facility and capacity, and any special radiation capabilities. Contacts and arrangements made in developing this list should be described. S	NR	3A(9)	NR but included at Annex 2A Attachment 19
10 CFR 52.17(b)(2)(i) 10 CFR 50.47(b)(13) 10 CFR 50 APP E IV (H)	NUREG-0654 REV 1, SUPPLEMENT 2, Section V	M. General Plans for Recovery and Re-entry are developed			NR but Chapter 13	NR but 1B	NR but 2F; Appendix F
10 CFR 52.17(b)(2)(i) 10 CFR 50.47(b)(14) 10 CFR 50 APP E IV (F)	NUREG-0654 REV 1, SUPPLEMENT 2, Section V	N. Periodic Exercises are Conducted			NR Chapter 14 - Placeholder only	NR but 6A	NR but 2M
10 CFR 52.17(b)(2)(i) 10 CFR 50.47(b)(15) 10 CFR 50 APP E IV (F)	NUREG-0654 REV 1, SUPPLEMENT 2, Section V	O. Radiological Emergency Response Training			CH 15		

TABLE B-1
Requirements Matrix

Code	Guidance	Requirement	Planning Standard	Evaluation Criteria	ESP	Illinois[a]	DeWitt[b]
			A Radiological Emergency Response Training Program is described for those who may be called on to assist in an emergency.		CH 15		
				1. Describe a training program for instructing and qualifying personnel who will implement radiological emergency response plans. Specialized internal training and periodic retraining shall be provided in the following categories: A,S,L	15.1; 15.2; 15.5	6B	2L
				a. Directors or coordinators of the response organizations	15.4.1.1	6B	2L
				b. Personnel responsible for accident assessment	15.4.1.2	6B	2L
				c. Radiation monitoring teams and radiation analysis personnel	15.4.1.3	6B	2L
				d. Police, security and fire fighting personnel	15.4.1.4	6B	2L
				f. First aid and rescue personnel	15.4.1.6	6B	2L
				g. Local support services personnel including Civil Defense /emergency services personnel	15.4.1.7	6B	2L
				h. Medical support personnel	15.4.1.8	1H; 6B	2L
				i. Personnel responsible for transmission of emergency information and instructions.	15.4.1.9; 15.4.1.10	6B	2L

TABLE B-1
Requirements Matrix

Code	Guidance	Requirement	Planning Standard	Evaluation Criteria	ESP	Illinois[a]	DeWitt[b]
10 CFR 52.17(b)(2)(i) 10 CFR 50.47(b)(16) 10 CFR 50 APP E IV (G)	NUREG-0654 REV 1, SUPPLEMENT 2, Section V	P. Responsibility for the Planning Effort: Development, Periodic Review and Distribution of Emergency Plans			CH 16		
			Responsibilities are established for plan development and review and for distribution of emergency plans, and training is described for planners.		CH 16		
				1. Each organization shall provide for the training of individuals responsible for the planning effort. A,S,L	16.1	6B	2L
				2. Each organization shall identify by title the individual with the overall authority and responsibility for radiation emergency response planning. A,S,L	16.2	6C	2N
				3. Each organization shall designate an Emergency Planning Coordinator with responsibility for the development and updating of emergency plans and coordination of these plans with other response organizations. A,S,L	16.3	6C	2N
				4. Each organization shall update its plan and agreements as needed. A,S,L	16.4	6C	2N

TABLE B-1
Requirements Matrix

Code	Guidance	Requirement	Planning Standard	Evaluation Criteria	ESP	Illinois[a]	DeWitt[b]
				5. The emergency plans and approved changes to the plans shall be forwarded to all organizations and appropriate individuals with responsibility for implementation of the plans. Revised pages shall be dated and marked to show where changes have been made. A,S,L	16.5	6C	2N
				6. Each plan shall contain a specific table of contents. Plans submitted for review should be cross-referenced to this supplement. A,S,L	App. B	6D	2N

Notes:

[a] Illinois Plan for Radiological Accidents (IPRA). Volume I. Concept of Operations. May 2001.
[b] Illinois Plan for Radiological Accidents (IPRA). Volume VIII. Clinton Plan. July 2003.
[c] NR = Not required.
[d] A = Applicant; S = State; L = Local; F = Federal

APPENDIX C

References

10 CFR 20. Code of Federal Regulations. "Standards for Protection Against Radiation."

10 CFR 50. Code of Federal Regulations. "Domestic Licensing of Production and Utilization Facilities."

10 CFR 52. Code of Federal Regulations. "Early Site Permits; Standard Design Certification; and Combined Licenses for Nuclear Power Plants."

10 CFR 73. Code of Federal Regulations. "Physical Protection of Plant and Materials."

10 CFR 100. Code of Federal Regulations. "Reactor Site Criteria."

15 CFR 950. Code of Federal Regulations. "Environmental Data and Information."

29 CFR 1910. Code of Federal Regulations. "General Industry Standards."

44 CFR 350. Code of Federal Regulations. "Review and Approval of State and Local Radiological Emergency Plans and Preparedness."

49 CFR 171. Code of Federal Regulations. "General Information, Regulations, and Definitions."

49 CFR 172. Code of Federal Regulations. "Hazardous Materials Table, Special Provisions, Hazardous Materials Communications, Emergency Response Information, and Training Requirements.

American Nuclear Insurers (ANI). "Accident Notification Procedures for Liability Insureds." Bulletin #5B. 1981.

American Nuclear Insurers (ANI)/Mutual Atomic Energy Liability Underwriters (MAELU). "Emergency Planning." *Engineering Inspection Criteria For Nuclear Liability Insurance.* Section 6.0, Revision 1. November 1985.

Bureau of Transportation Statistics. National Transportation Atlas. 2000.

Clinton Chamber of Commerce (CCC). Number of Small Businesses. Available at: www.clintonillinois.com. August 8, 2002.

Exelon Generation Company (EGC), LLC. *Exelon Nuclear Standardized Radiological Emergency Plan*. Revision 14. February 2003.

Federal Bureau of Investigation (FBI). "Federal Bureau of Investigation and Nuclear Regulatory Commission Memorandum of Understanding for Cooperation Regarding Threat, Theft, or Sabotage in U.S. Nuclear Industry." *Federal Register*. Volume 44, p. 75535. December 20, 1979.

Federal Emergency Management Agency (FEMA). "Guide for the Evaluation of Alert and Notification Systems for Nuclear Power Plants." FEMA-REP-10. Section E.6.2.1. November 1985.

Federal Emergency Response Agency (FERA). *Federal Radiological Emergency Response Plan*. May 1, 1996.

Illinois Agricultural Statistics Service (IASS). *Illinois Farm Report*. Volume 23. No. 4. March 25, 2002.

Institute of Nuclear Power Operations (INPO). "Emergency Resources Manual." No. 03-001. January 2003.

Institute of Nuclear Power Operations (INPO). Memorandum of Agreement Among the Electric Power Research Institute, the Institute of Nuclear Power Operations, and the Nuclear Energy Institute." Revision 1. June 30, 1997.

Memorandum of Understanding (MOU). "Memorandum of Understanding (MOU) between U.S. Nuclear Regulatory Commission (USNRC) and Federal Emergency Management Agency (FEMA)." December 1, 1991.

National Center for Education Statistics (NCES). Available at: http://www.capitolimpact.com. July 2, 2002.

National Fire Protection Association (NFPA), Inc. *Standards for Competencies for EMS Personnel Responding to Hazardous Materials Incidents.* NFPA-473. February 7, 1997.

National Fire Protection Association (NFPA), Inc. *Standard on Industrial Fire Brigades.* NFPA-600. February 2, 1996.

Nuclear Utility Management and Resources Council (NUMARC. Now NEI.) *Methodology for Development of Emergency Action Level*. NESP-007. Revision 2. 1994.

State of Illinois. "Concepts of Operations." *The Illinois Plan for Radiological Accidents (IPRA)*. Volume I. May 2001.

State of Illinois. "Clinton Power Station." *The Illinois Plan for Radiological Accidents (IPRA)*. Volume VIII. July 2003.

U.S. Census Bureau. 2000 Census Summary File 1. 2001.

U.S. Census Bureau. Census 2000 County and County Equivalent Areas of Illinois Generalized Boundary File. Available at: http://www.census.gov/geo/www/cob/co2000.html. June 26, 2002b.

U.S. Census Bureau. Census 2000 Incorporated/Census Designated Places of Illinois Generalized Boundary File. Available at: http://www.census.gov/geo/www/cob/pl2000.html. June 26, 2002a.

U.S. Census Bureau. Census 2000 TIGER/Line Files (machine-readable data files). Roads, Railroads, and Water Features. Washington D.C. 2000.

U.S. Department of Energy (USDOE), Region 5. *Radiological Assistance Plan*. April 1997.

U.S. Environmental Protection Agency (USEPA). *Manual of Protective Action Guides and Protective Actions for Nuclear Incidents*. 400-R-92-001. May 1992.

U.S. Nuclear Regulatory Commission (USNRC). *Concept of Operations: NRC Incident Response.* NUREG-1471. February 1994.

U.S. Nuclear Regulatory Commission (USNRC). *Criteria for Emergency Planning in Early Site Permit Application, Draft Report for Comment.* NUREG-0654/FEMA-REP-1. Revision 1. Supplement 2. April 1996.

U.S. Nuclear Regulatory Commission (USNRC). *Criteria for Preparation and Evaluation of Radiological Emergency Response Plans and Preparedness in Support of Nuclear Power Plants.* NUREG-0654/FEMA REP-1. Revision 1. November 1980.

U.S. Nuclear Regulatory Commission (USNRC). *Criteria for Protective Action Recommendations for Severe Accidents, Draft Report for Interim Use and Comment.* NUREG-0654/FEMA-REP-1. Revision 1, Supplement 3. July 1996b.

U.S. Nuclear Regulatory Commission (USNRC). *Emergency Planning and Preparedness for Nuclear Power Reactors*. Regulatory Guide 1.101. Revision 3. August 1992.

U.S. Nuclear Regulatory Commission (USNRC). *Functional Criteria for Emergency Response Facilities*. NUREG-0696. February 1981.

U.S. Nuclear Regulatory Commission (USNRC). *Incident Response Plan.* NUREG-0728. June 1987.

U.S. Nuclear Regulatory Commission (USNRC). *Planning Basis for the Development of State and Local Government Radiological Emergency Response Plans in Support of Light Water Nuclear Power Plants.* NUREG-0396. December 1978.

U.S. Nuclear Regulatory Commission (USNRC). *Response Technical Manual (RTM-96)*. NUREG/BR-0150, Volume 1, Revision 4. March 1996a.

U.S. Nuclear Regulatory Commission (USNRC). *Requirements for Emergency Response Capability.* NUREG-0737. Supplement 1. December 1982.