AREVA

February 10, 2006
NRC:06:007

Document Control Desk
U.S. Nuclear Regulatory Commission
Washington, D.C. 20555-0001

**Response to a Request for Additional Information Regarding Evaluation of a Potential Safety Significant Issue Pursuant to 10CFR21(a)(2)**

Ref. 1: Letter, James F. Mallay (Framatome ANP) to Document Control Desk (NRC), "Evaluation of a Potential Safety Significant Issue Pursuant to 10CFR21(a)(2)," NRC:04:063, November 23, 2004.

Framatome ANP (FANP) initiated a discovery on September 27, 2004, as a result of the determination that thermal aging embrittlement of the CRDM leadscrew male coupling (bayonet) on B&W-designed plants could lead to failure of the bayonet during operation. A request for additional information was provided by the NRC in e-mails on November 30, 2005 and December 9, 2005.

The questions and responses to this request are provided in Attachment A to this letter, which is non-proprietary.

Sincerely,

Ronnie L. Gardner

Ronnie L. Gardner, Manager
Site Operations and Regulatory Affairs
Framatome ANP, Inc.

Enclosure

cc: G.S. Shukla
O. Tabatabai
Project 728

IE19

FRAMATOME ANP, INC. An AREVA and Siemens company
3315 Old Forest Road, P.O. Box 10935, Lynchburg, VA 24506-0935
Tel.: 434 832 3000 - Fax: 434 832 3840 - www.areva.com

## Attachment A

## Request for Additional Information Regarding Evaluation of a Potential Safety Significant Issue Pursuant to 10CFR21(a)(2)

**Question 1:** *Since thermal embrittlement depends on the material properties, the staff requests that Framatome ANP provide the following information:*

**Question 1A:** *Babcock Wilcox (B&W) design specification requirements and the related ASME specification for the subject material.*

**Response 1A:**
The male coupling is a non-pressure boundary component; there were no ASME requirements when the male coupling was designed and fabricated. Hence, the male coupling is not an ASME Code component. The B&W material specification for the CRDM male coupling was Aerospace Material Specification (AMS) 5643H "Steel Bars, Forgings, and Rings, Corrosion Resistant 17Cr – 4Ni – 4 Cu", Revised 9-30-66. This material, commonly known as Type 17-4PH, is a martensitic precipitation-hardenable stainless steel. Current ASME material specifications for Type 17-4PH material that are comparable to AMS 5643H are SA-564 (bars and shapes) and SA-705 (forgings), Type 630.

For the male couplings, the Type 17-4PH material was procured in Condition A, i.e., solution heat-treated at 1900±25°F followed by air or oil-quench. After machining, the CRDM male coupling was precipitation heat-treated to the H-1100 condition, i.e., rapidly heated to 1100±10°F and held for 4 to 4½ hours, and slowly cooled in still air to room temperature. The AMS 5643H required room temperature mechanical properties and typical room temperature mechanical properties for the non-thermally aging embrittled Type 17-4PH (H-1100 condition) are listed below:

| | AMS 5643H Requirement | Typical |
|---|---|---|
| Tensile Strength | 140 ksi, min. | 150 ksi |
| Yield Strength | 115 ksi, min. | 135 ksi |
| Elongation, 2-in. | 14%, min. | 17.0% |
| Reduction of Area | 45%, min. | 58% |
| Hardness | 32 – 38 HRC | 34 HRC |
| Charpy V-notch | No requirement | 45 ft-lb. |

**Question 1B:** *The type of material i.e. cast or wrought product.*

**Response 1B:**
The CRDM male coupling was machined from wrought Type 17-4PH bars or forgings procured to AMS 5643H (also see Response to Question 1A).

**Question 1C:** *Typical composition requirements.*

**Response 1C:**
The chemical composition requirements of AMS 5643H are listed below.

| | C | Mn | Si | P | S | Cr | Ni | Cb + Ta | Cu |
|---|---|---|---|---|---|---|---|---|---|
| Min. | – | – | – | – | – | 15.50 | 3.00 | 5xC | 3.00 |
| Max. | 0.07 | 1.00 | 1.00 | 0.040 | 0.030 | 17.50 | 5.00 | 0.45 | 5.00 |

**Question 1D:** *Exposure to typical neutron fluence values.*

**Response 1D:**
The CRDM leadscrew is connected to the control rod assembly (CRA) by inserting the male coupling at the end of the leadscrew into the female coupling on the top of the CRA (see figures included in the Response to Question 1E). During operation, the control rods are free to move into the fuel or to be withdrawn from it. The coupling position varies according to the CRA function during operation. Except for the regulating rods and axial power shaping rods (APSRs), the control rods are typically withdrawn and the coupling is more than 139 inches above the fuel. During operation, a bank of regulating rods is partially inserted. For these regulating CRAs, the male couplings would be more than 103 inches from the top of the fuel. The APSRs are typically inserted around the mid-plane of the fuel. The male couplings for the APSRs would be about 70 inches from the top of the active fuel.

If a CRA were to be fully inserted, the male coupling would be near the top of the fuel assembly. The typical fluence at 48 effective full power years (EFPY) at this position would be:

$$\text{Fluence}_{\text{48 EFPY Fully Inserted Coupling}} = 2.58 \times 10^{21}\ \text{n/cm}^2\ (E > 1.0\ \text{MeV})$$

Note: 48 EFPY is often used to calculate a 60-calendar-year lifetime fluence for the PWR reactor vessel internals; however, the actual male coupling lifetime EFPY for each plant depends on the actual plant operation history and whether the CRDMs (including the male couplings) have been replaced.

However, the CRAs are not typically fully-inserted during plant operation. As noted above, there are three typical, but conservative, positions of the male coupling above the active fuel: (1) 139 inches for a fully withdrawn CRA, (2) 103 inches for a regulating

CRA, and (3) 70 inches for an APSR. The typical fluence at 48 EFPY for the male coupling at these three positions is listed below:

$$\text{Fluence}_{48\ \text{EFPY},\ Z\ =\ 70\ \text{Inches Withdrawn}} = 4.89 \times 10^{13}\ \text{n/cm}^2\ (E > 1.0\ \text{MeV})$$

$$\text{Fluence}_{48\ \text{EFPY},\ Z\ =\ 103\ \text{Inches Withdrawn}} = 1.12 \times 10^{10}\ \text{n/cm}^2\ (E > 1.0\ \text{MeV})$$

$$\text{Fluence}_{48\ \text{EFPY},\ Z\ =\ 139\ \text{Inches Withdrawn}} = 1.20 \times 10^{6}\ \text{n/cm}^2\ (E > 1.0\ \text{MeV})$$

There were early periods of operation when one regulating bank of control rods was fully inserted. While this type of operation is no longer typical, it did result in male coupling fluence values that could be as high as $2.45 \times 10^{20}$ n/cm$^2$ (E > 1.0 MeV) in less than 4.6 EFPY.

The response to Question 6 indicates that the CRDMs have been recently changed, only TMI-1 would currently have a male coupling with this fluence value. Without fully inserted regulating rods, the highest typical fluence on the male coupling would be $4.89 \times 10^{13}$ n/cm$^2$ (E > 1.0 MeV) for the APSRs. However, these rods only shape the axial power. The highest typical fluence on the male coupling for rods that have never been fully inserted would be $1.12 \times 10^{10}$ n/cm$^2$ (E > 1.0 MeV).

**Question 1E:** *Related drawing of the subject part.*

**Response 1E:**
See Figure 1 through Figure 6 below.

The CRDMs for the B&W designed 177-FA (fuel assembly) PWR is schematically shown in Figure 1 and the reactor vessel internals is shown in Figure 2. The CRDMs are mounted on the reactor vessel head and are used to raise, lower, or maintain control rod assembly (CRA) position within the reactor core. The CRDMs are electro-mechanical devices (see Figure 3), which convert the rotary motion imposed by a magnetic field into linear motion of the control rod by using the leadscrew and roller nuts. The leadscrew is connected to the CRA by inserting the male coupling at the end of the leadscrew into the female coupling on the top of the CRA (see Figure 4). Figure 5 shows an unused male coupling and a male coupling with a fractured tang removed from Oconee 3 in 2001. Figure 6 shows the detail of the fracture locations and fracture surfaces.

**Figure 1. Locations of the CRDMs in B&W PWRs**

## Typical Pressurized Water Reactor

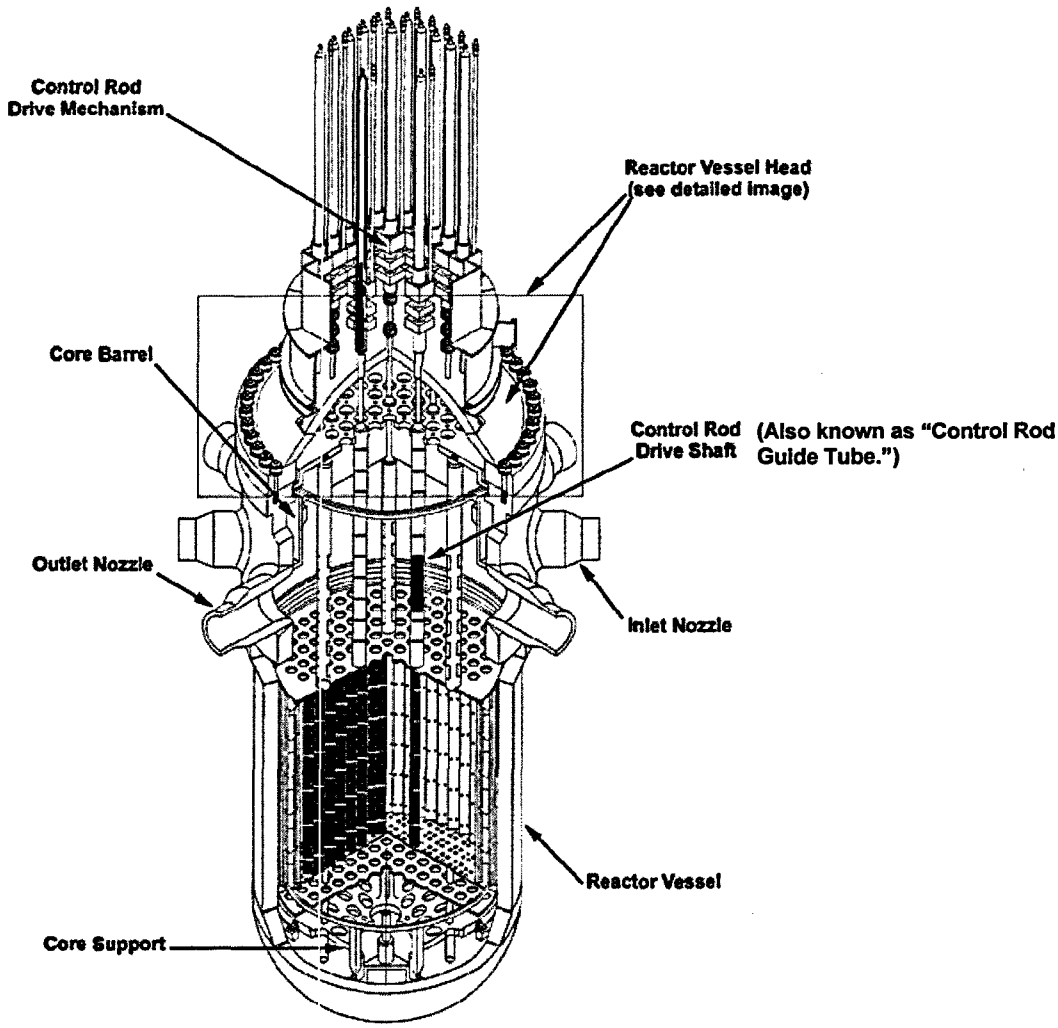

**Figure 2. Reactor Vessel Internals General Arrangement**

(Note: some component items are rotated for clarity)

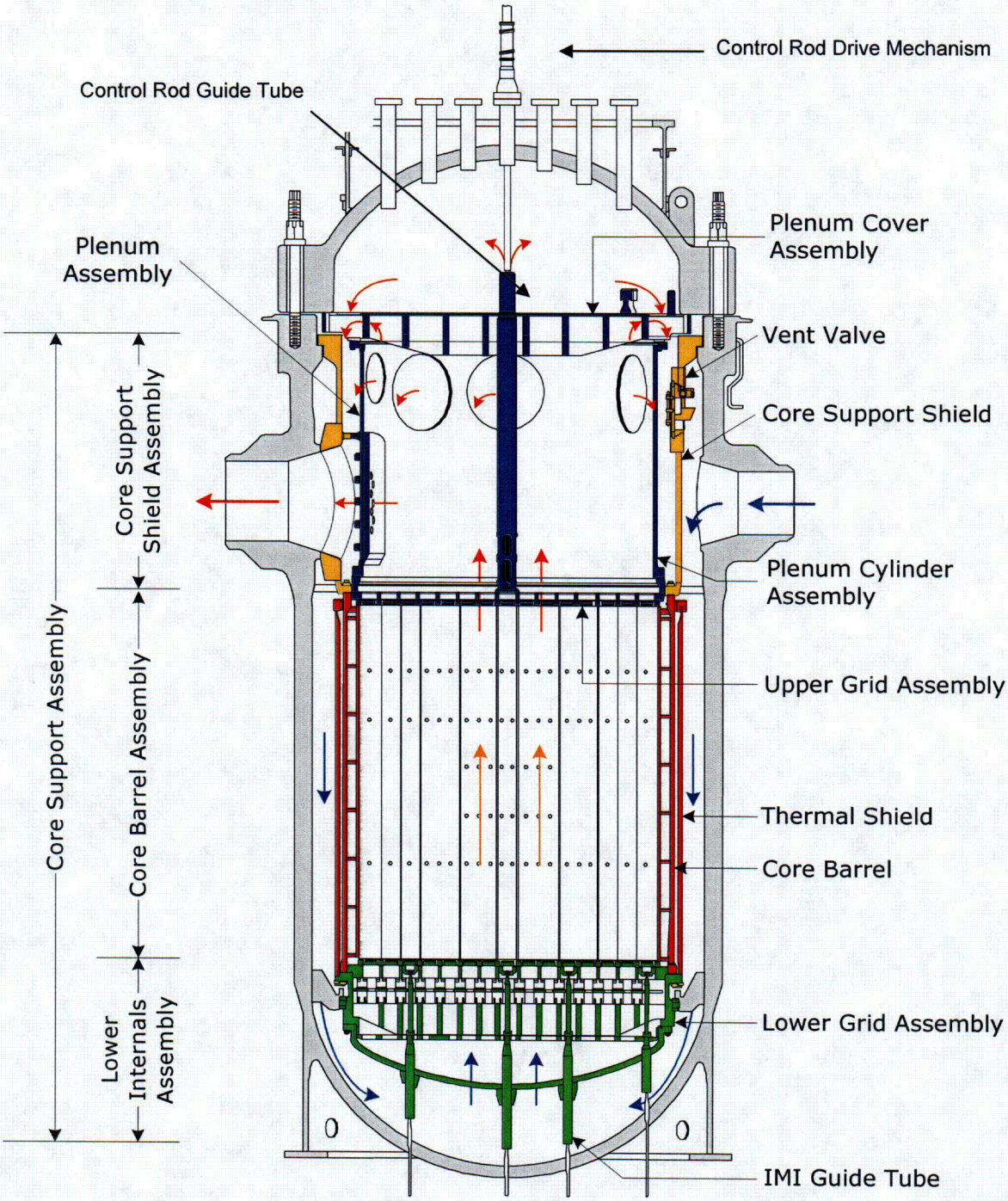


C01

**Figure 3. Location of the Male (Bayonet) Coupling on the CRDM**

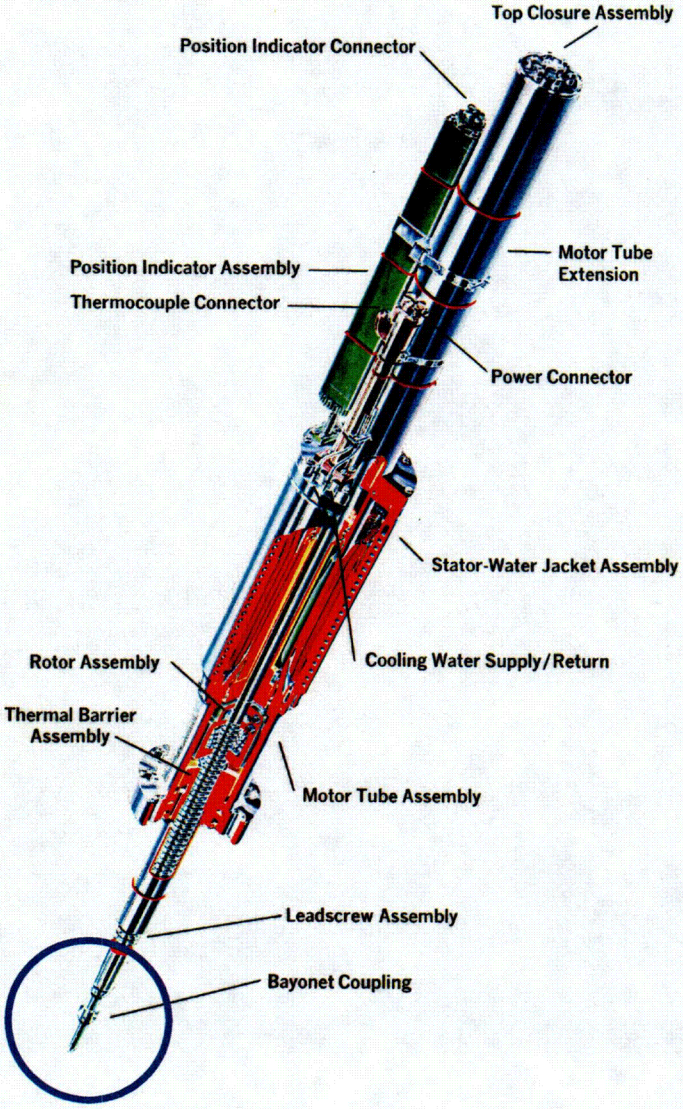


C02

**Figure 4. Male Coupling and Connection to Control Rod Assembly (CRA)**

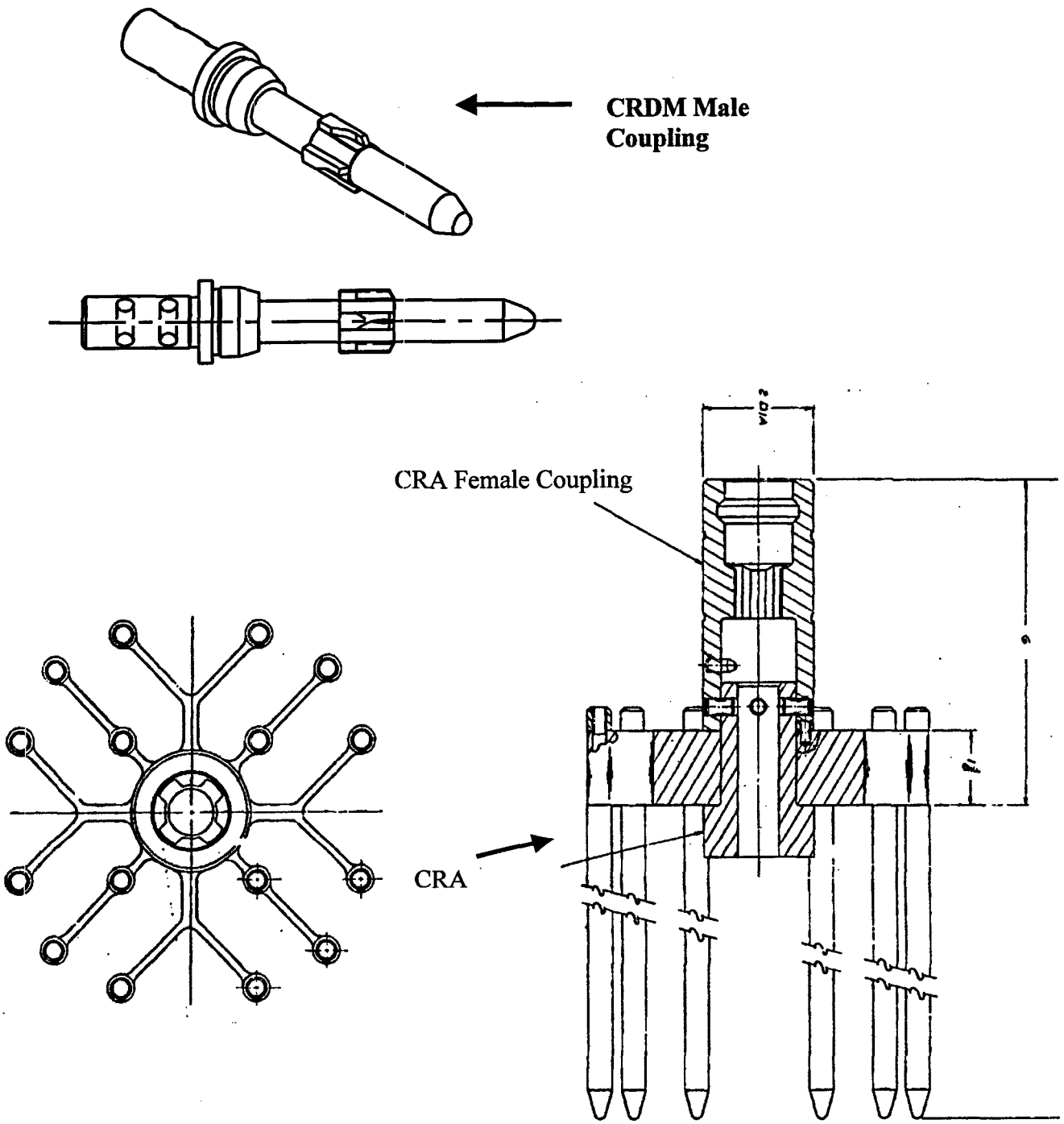

**Figure 5. CRDM Male Coupling (top, an archived male coupling; bottom, an male coupling removed from Oconee 3 and sectioned into three pieces to isolate the fractured tang)**

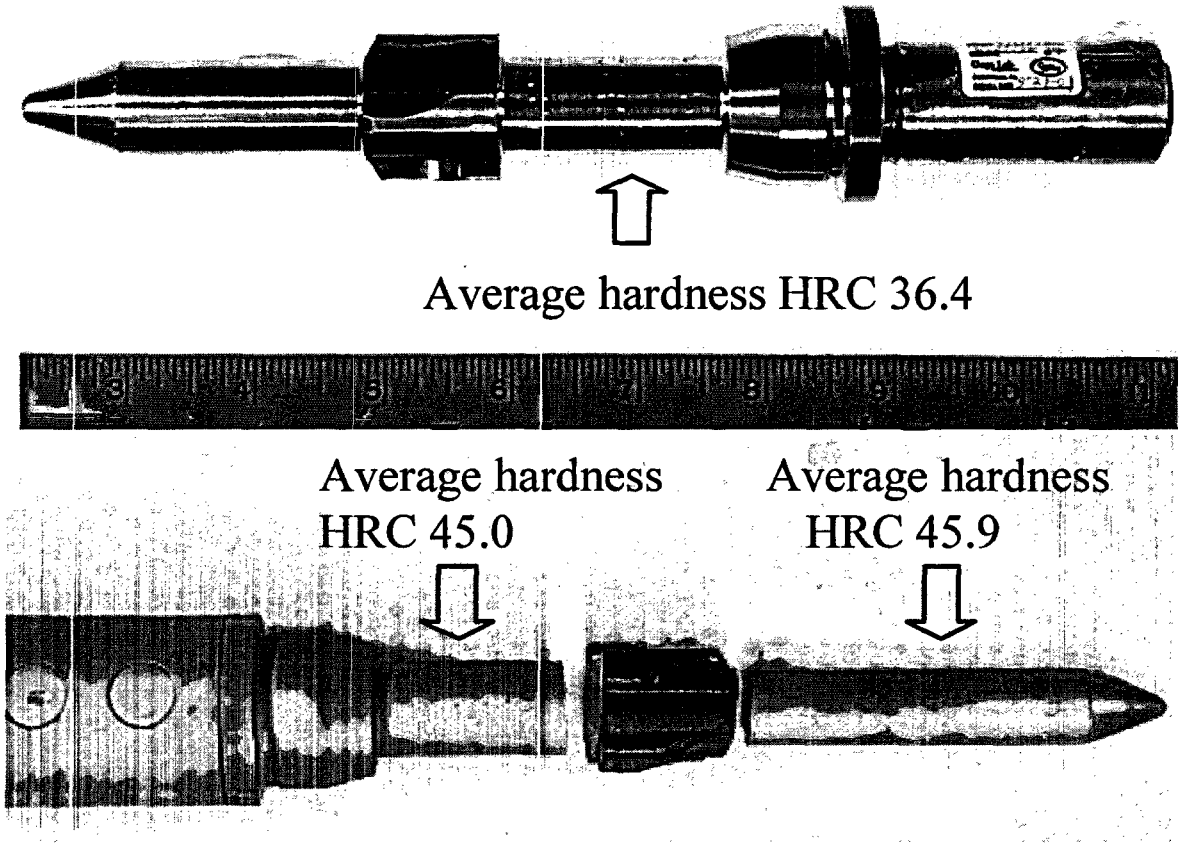

**Figure 6. Fractured Tangs of Two Male Couplings Removed from Oconee 3**

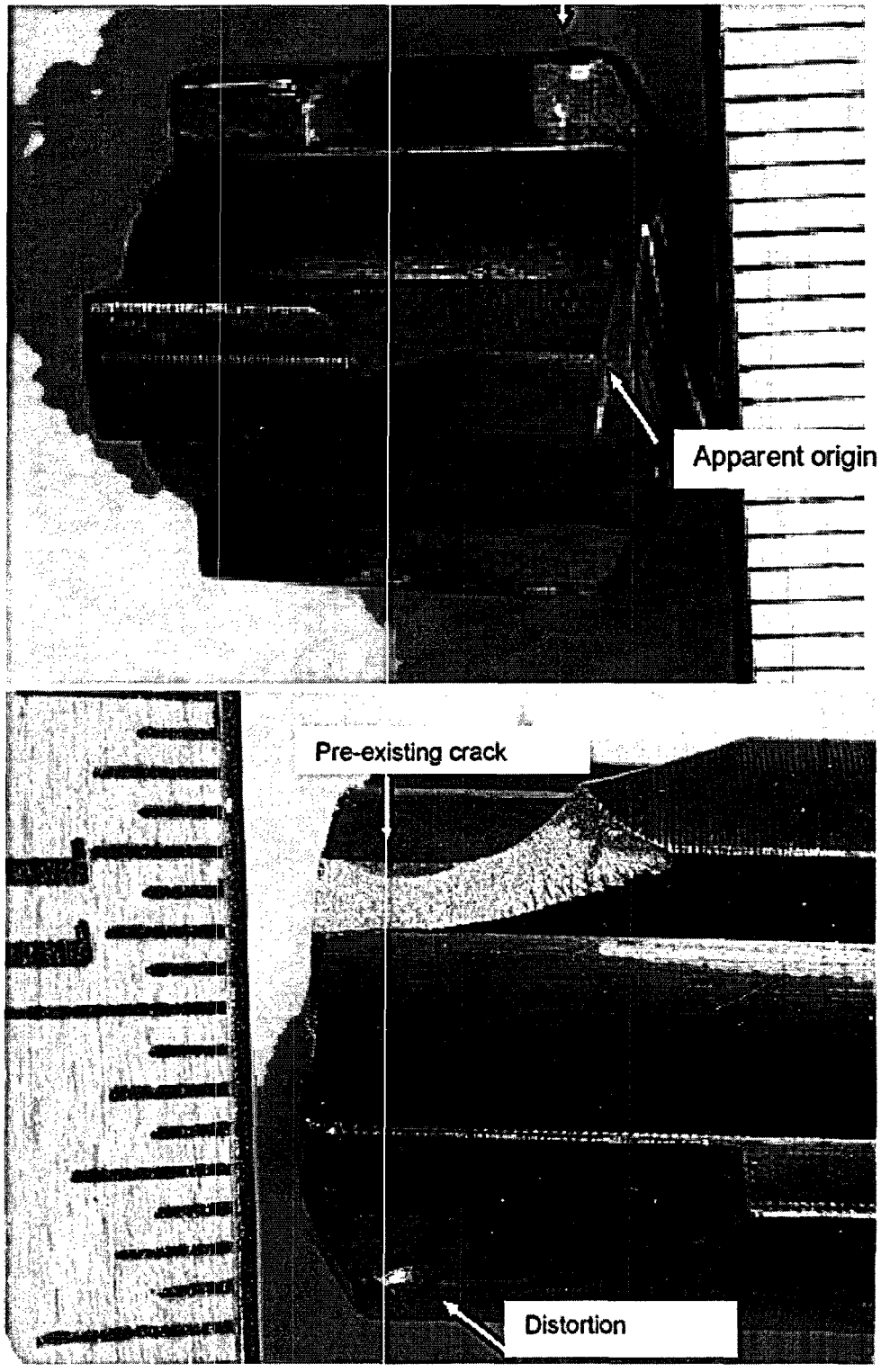

**Question 1F:** *Any known aging degradation i.e, fatigue failures or cracking due to service loads.*

**Response 1F:**
It is well established that the Type 17-4PH material undergoes thermal aging embrittlement at the PWR operating temperatures. FANP has performed hardness measurement on a limited number of CRDM male couplings from the operating B&W units since 1993. In 2000, an evaluation of the increased hardness values confirmed the thermal aging embrittlement had taken place in the male couplings. In 2001, two male couplings at Oconee 3 were found fractured in one of the four tangs in the area facing the stop pin inside the female coupling on the CRA. Evidence of damage at the same location on the other three tangs was also noticed. The failures were concluded to be due to single or multiple impact and bending loads to the Type 17-4 PH (H-1100) male coupling tangs, which had become embrittled from exposure to operating temperature, during the CRDM coupling and uncoupling process. Even though the failures themselve were not due to service loads during plant operation, the embrittlement from the operating temperature contributed to the fractures.

In addition to brittle failures, thermal aging embrittlement increases susceptibility to stress corrosion cracking (SCC). Failures of thermal age embrittled Type 17-4PH components have been observed elsewhere. An example is the Type 17-4PH PORV block valve stem failure at Catawba Unit 2 in 1991 (NRC Information Notice 92-60: Valve Stem Failure Caused by Embrittlement , August 20, 1992). The failure was attributed to a combination of thermal aging embrittlement and SCC.

The thermal aging embrittlement of Type 17-4PH in PWRs and the laboratory investigation of the fracture of two male coupling tangs are discussed in more detail in the following two references:

1. H. Xu and S. Fyfitch, "Aging Embrittlement Modeling of Type 17-4PH at LWR Temperatures," the 10th International Conference on Environmental Degradation of Materials in Nuclear Power Systems – Water Reactors, NACE International, Houston, Texas (2001).

2. H. Xu, S. Fyfitch, Charles, R. Frye, and David E. Whitaker, "Fracture of Type 17-4PH CRDM Leadscrew Male Coupling Tangs," the 11th International Conference on Environmental Degradation of Materials in Nuclear Power Systems – Water Reactors, ANS, Skamania Lodge in Stevenson, WA (2003).

**Question 2:** *Explain why a rod drop analysis of record event would not be conservative. What were the original assumptions used in the analysis which would be different with respect to bayonet failure mechanism.*

**Response 2:**
The analyses of record for the dropped rod event that is described in the individual plant safety analysis reports for all of the B&W-designed plants, except for the Oconee units, were performed by FANP. Duke Power performed the analyses for the Oconee Units and applied their licensed methodology. For the FANP calculations of the dropped control rod transient, various dropped rod worths were modeled as were different times

in core life ranging from beginning-of-cycle (BOC) to end-of-cycle (EOC) conditions. A single dropped rod is considered with the core operating at rated power. The dropped rod includes the CRA, the CRDM leadscrew, and the CRDM male coupling (bayonet). This is important as the leadscrew is used to identify the position (elevation) of the control rod when it is inserted in the core. The current design bases for this analysis takes credit for the Integrated Control System (ICS) and Control Rod Drive Control System (CRDCS) interaction to inhibit the control rod pull function. The rod pull inhibit is actuated when the indicated position of a dropped CRA is more than ~ 9 inches out of alignment with the rest of the group. Because of this function, the ICS cannot pull the remaining rods to maintain the specified core power and system average temperature. The resulting core power and reactor coolant system (RCS) response for the dropped rod transient is limited based on the core time-in-life and the location and worth of the dropped rod. If the bayonet coupling should completely fail, the control rod will drop. There will, however, be no indication of a misaligned control rod. This allows the ICS to begin to withdraw the remaining control rods and the resulting core power response could be worse than previously calculated.

**Question 3:** *Explain this issue in detail and state how many rods could fail under this condition.*

**Response 3:**
The thermal aging embrittlement in the CRDM male couplings have been confirmed by hardness tests and laboratory investigation of the fractured male coupling tangs (see Response to Question 1F). In addition, thermal aging embrittlement increases susceptibility to stress corrosion cracking (SCC). Failures of thermal age embrittled Type 17-4PH components have been observed elsewhere. An example is the Type 17-4PH PORV block valve stem failure at Catawba Unit 2 in 1991 (NRC Information Notice 92-60: Valve Stem Failure Caused by Embrittlement, August 20, 1992). The failure was attributed to a combination of thermal aging embrittlement and SCC. Hence, it is postulated that the embrittled CRDM male couplings can lead to a complete failure of the bayonet during plant operation.

The Type 17-4PH thermal aging embrittlement kinetics are most rapid during the first few years of operation. Hence, even the male couplings on the recently installed replacement CRDMs are expected to become embrittled after ~5 years of operation. The thermal aging embrittlement and SCC susceptibility are likely to be influenced by heat-to-heat chemical composition variation among the male couplings. The actual chemical composition for the male couplings in use has not been retrieved. Because time-to-failure of a male coupling due to either brittle fracture or SCC, or a combination of brittle fracture and SCC, depends on many factors (such as chemical composition, fabrication, individual CRA operation history, operating stresses, etc.), it is very unlikely that an operating plant would experience simultaneous complete failure of two or more male couplings.

The absolute number of rods that can fail is limited by the time in core life and core location of the inserted rods. If a sufficient number of rods are inserted, the decrease in core power and RCS temperature will cause the RCS pressure to decrease sufficiently to reach the reactor protection system (RPS) low-pressure trip setpoint, which will terminate the transient.

**Question 4:** *Explain why Oconee would not be impacted.*

**Response 4:**
Duke Power has performed the analysis of record for the Oconee plants. In those analyses, the rod pull inhibit function of the ICS was not credited.

**Question 5:** *Provide a detailed drawing showing CRDM leadscrew male coupling (bayonet).*

**Response 5:**
See Response to Question 1E above.

**Question 6:** *What are the compensatory measures planned for these plants.*

**Response 6:**
As a result of the tang fractures (noted in the Response to question 1F), the FANP procedures for coupling and uncoupling of the leadscrew were modified. A note of caution was added to the procedures which stated that tangs have been broken on the leadscrew male couplings and that during the coupling or uncoupling process, the drives should be rotated gently to the hard stop. Previously, the coupling and uncoupling of the drives was performed in a manner in which the bayonet was forced against the hard stop with sufficient force for the mechanic to "feel" the hardstop. With this change to the procedure, no new failures of the bayonet tangs have since been identified. Further, no complete failures of the CRDM male couplings have been observed over the lifetime of the B&WOG plants. It was reasonable then, to conclude that no immediate action was necessary while a more detailed operability and safety assessment was being assembled.

A short-term operability assessment was prepared to address both the material aspects and expected plant response to a failure of the leadscrew male coupling. It is also noted that all of the CRDMs at Arkansas Nuclear One Unit 1, Crystal River Unit 3, and the three Oconee units have been replaced over the last 4 years although the same Type 17-4 PH material was used for the replacement bayonets. Also, examinations have been performed on a number of the in-service CRDMs through the first 20 to 25 years of plant operation. No reportable flaw indications, either with visual or by dye-penetrant examination have been noted other than instances of upset metal at the bayonet tangs. In addition, no failures of the bayonets or the tangs were identified until 2001. Although the Type 17-4 PH material may be susceptible to embrittlement, the historical evidence suggests that the loads are not sufficient to cause the bayonet to fail and it does provide reasonable assurance that a failure is not imminent.

The plant response to a dropped rod transient was evaluated. During a large portion of power operation, the plant will be automatically controlled by the ICS with the core power demand set at or near the rated power level for the plant. The ICS will control main feedwater flow and steam pressure to maintain the RCS average temperature and the desired electrical output. If a control rod is dropped, the core power, RCS average temperature and RCS pressure will decrease as will the electrical output. If the worth of the dropped control rod is very large, greater than approximately 0.25% $\Delta k/k$, the reactor

will be protected by an automatic trip signal on low RCS pressure. A reactor trip will terminate the transient.

If the dropped rod transient results in a decrease in measured core power that is greater than 5 percent (typical), a cross-limit will be reached and the ICS will enter the track mode. In track, the core power demand will be based on the actual electrical output and the integral for the ICS $T_{ave}$ controller will be blocked for a period of time. Electrical output will decrease due to the reactor power drop caused by the dropped control rod. A number of alarms will sound. Since the electrical output will have decreased, demand for reactor power will decrease and control rod movement will be minimal by the ICS. Therefore, the resulting transient will be enveloped by the accident analysis. Although the rod position indication will show that all rods are aligned, an evaluation of the incore detector data should be sufficient to identify that there is a dropped rod. Also, an increase in the quadrant power tilt would be expected for most dropped rods.

If the dropped rod is in a low power location such that the decrease in core power is less than 5 percent, the ICS will withdraw the control rods to maintain reactor power demand and RCS average temperature. As the ICS withdraws the control rods in this scenario, there is a limit on the maximum measured power level of 103% (typical). In addition, the B&W-designed plants have adopted the cycle-specific rod operating recommendations, which typically require that the regulating rod group be at least 90% withdrawn through a majority of the fuel cycle. Core design data also suggest that the typical worth of a dropped rod is between 0.05 %Δk/k and 0.12 %Δk/k, with a design limit of 0.20 %Δk/k. If a more realistic worth for a single dropped rod is credited, the expected decrease in RCS temperature will be much smaller and coupled with the CRAs that are at least 90% withdrawn, will greatly reduce the amount of core power increase as the ICS withdraws the rods. The combination of a realistic dropped rod worth, group location, and crediting all features of the ICS will effectively limit the plant response to within acceptable limits.