BRUCE H HAMILTON
Vice President
Oconee Nuclear Station

Duke Power
ON01VP / 7800 Rocherster Highway
Seneca, SC 29672

864 885 3487
864 885 4208 fax

February 2, 2006

U. S. Nuclear Regulatory Commission
ATIN: Document Control Desk
Washington, DC 20555-0001

SUBJECT: Duke Energy
Oconee Nuclear Station, Units 1, 2, and 3
Docket Nos. 50-269, -270, -287
Request for Relief No. 2006-ON-001

In accordance with 10 CFR 50.55a(a)(3)(i), Duke Energy Corporation hereby requests NRC approval of a relief request for the next two scheduled refueling outages for each of the three Oconee Nuclear Station (ONS) Units. The relief request involves an alternative to the American Society of Mechanical Engineers (ASME) Boiler and Pressure Vessel Code, Section III, NB-5222(a), requiring that Code Class 1 weld joints be examined via radiographic methods to satisfy non-destructive examination requirements as part of final weld acceptance during construction. The details of the Request for Alternative are provided in Enclosure 1.

Duke Energy plans to replace all Pressurizer level tap and sample tap nozzle safe ends composed of Alloy 600 with corrosion resistant materials, such as low carbon stainless steels. Duke plans to replace three ONS Unit 3 level tap nozzle safe ends during the outage scheduled for April 2006. During the next two scheduled refueling outages for each of the three ONS Units, a total of six level taps are being replaced in each unit of ONS (three in the steam space, and three in the water space), as well as one sample tap on each ONS Pressurizer. This amounts to a total of seven replacements per ONS Pressurizer by the end of 2008. Duke Energy currently plans to use the proposed alternative during the replacement work for these 18 level tap nozzle safe ends and 3 sample taps.

A047

Approval of the attached Request for Alternative is requested by March 13, 2006, to support planning and preparation activities for the ONS Unit 3 refueling outage that is scheduled to begin in April, 2006.

Please refer any questions regarding this submittal to Randy Todd - ONS Regulatory Compliance at (864) 885-3418.

Sincerely,

R.M. Glover/for

Bruce H. Hamilton

Enclosures:
1. 10 CFR 50.55a Request Number 2006-ON-01
2. Framatome Fabrication Drawings
3. ASME Section III Code Case N-659
4. Flaw Tech Qualification Block Drawings

xc w/att: Mr. William D. Travers
Administrator, Region II
U.S. Nuclear Regulatory Commission
Atlanta Federal Center
61 Forsyth St., SWW, Suite 23T85
Atlanta, GA 30303

L. N. Olshan, Project Manager, Section 1
Project Directorate II
Division of Licensing Project Management
Office of Nuclear Reactor Regulation
U. S. Nuclear Regulatory Commission
Washington, DC 20555-0001

xc(w/o attch):

M. C. Shannon
Senior NRC Resident Inspector
Oconee Nuclear Station

Mr. Henry Porter
Division of Radioactive Waste Management
Bureau of Land and Waste Management
SC Dept. of Health & Environmental Control
2600 Bull St.
Columbia, SC 29201

bxc w/att: R. L. Gill, Jr.
T. J. Coleman
V. B. Dixon
B. W. Carney, Jr.
R. P. Todd
L. C. Keith
G. L. Brouette (ANII)
J. J. Mc Ardle III
R. L. Doss
ISI Relief Request File
NRIA File/ELL EC050
Document Control

10 CFR 50.55a Request Number 2006-ON-01

Proposed Alternative
in Accordance with 10 CFR 50.55a(a)(3)(i)

--Alternative Provides Acceptable Level of Quality and Safety--

Duke Energy Corporation
Station Oconee Units 1, 2 & 3
Request for Alternative 2006-ON-01

Pursuant to 10CFR50.55a(a)(3)(i), Duke Energy Corporation requests to use an alternative to the 1983 Edition of Section III of the ASME Boiler and Pressure Vessel Code. Accordingly, information is being submitted in support of our determination that the alternative provides an acceptable level of quality and safety.

I. ASME Code Component(s) Affected:

All ASME Section III Code Class 1 Reactor Coolant System butt-welds between the Pressurizer Level and Sample Tap Nozzles and their respective Safe Ends at Oconee Nuclear Station (ONS), Units 1, 2, and 3.

A total of six level taps are being replaced in each unit of ONS (three in the steam space, and three in the water space), as well as one sample tap on each ONS Pressurizer. This amounts to a total of seven replacements per ONS Pressurizer. The existing weld numbers for the ONS Unit 1 level and sample nozzle-to-safe end welds are 1PZR-WP63-1 through 1PZR-WP63-7. The existing weld numbers for the ONS Unit 2 level and sample nozzle-to-safe end welds are 2PZR-WP63-1 through 2PZR-WP63-7. The existing weld numbers for the ONS Unit 3 level and sample nozzle-to-safe end welds are 3PZR-WP63-1 through 3PZR-WP63-7. These welds are expected to be given new "vendor weld numbers" as they are replaced by the individual modification packages. A copy of the fabrication drawings for the current pressurizer safe end design and installation is located in Enclosure 2.

II. Applicable Code Edition and Addenda:

ASME Code, Section XI 1998 Edition, 2000 Addenda.
ASME Code, Section III 1983 Edition, No Addenda.

III. Applicable Code Requirements:

The 1998 ASME Code, Section XI, 2000 Addenda, IWA-4221 requires that items used for replacement meet the owner's design specification and original construction code for the component. However, it also states that Section III may apply when the Construction Code wasn't Section III provided the requirements of IWA-4222 through IWA-4226 are met.

ASME Code, Section III requires that Class 1 weld joints be examined via radiographic methods to satisfy non-destructive examination (NDE) requirements as part of final weld acceptance during construction. For the ASME Code components listed previously, relief is requested from the requirements of 1983 ASME Section III paragraph NB-5222(a).

(a) "Butt welded joints shall be examined by the radiographic and either the liquid penetrant or magnetic particle methods."

IV. Reason for Request:

Duke Energy plans to replace all Pressurizer level tap and sample tap nozzle safe ends composed of Alloy 600 with corrosion resistant materials, such as low carbon stainless steels. The design of the replacement safe ends and welds are configured to be like those in the original designs.

The 1998 ASME Code, Section XI, IWA-4221(c), states that Section III may apply for items used for replacement provided the requirements of IWA-4222 through IWA-4226 are met. The ASME Code, Section III, 1B-5200, "Required Examination of Welds," requires that circumferential welded joints in piping, pumps, and valves be examined using the radiographic (RT) method and either liquid penetrant or magnetic particle examination methods.

In addition to the effectiveness of the proposed alternative (discussed in the following two sections of this request), Duke Energy proposes to use a qualified UT method in lieu of the RT method specified in the ASME Code, Section III in order to remove the inherent hazards associated with industrial radiography. Based on the review of the anticipated joint configuration of the planned welds it has been determined that 36 hours is required to do the radiographic examination for one weld. Since the performance of RT involves the use of highly radioactive isotopes, the personnel safety risk of inadvertent or accidental exposure and also the normal anticipated exposure associated with transporting, positioning and exposing a source for radiography is eliminated. Additionally, outage duration and costs will be reduced by allowing parallel path work to progress uninterrupted during examination of welds.

Duke Energy has evaluated the use of this alternative method and determined that its use will provide a level of quality and safety that is equivalent or superior to RT.

V. Proposed Alternative:

The alternative involves ultrasonic and surface examinations of Class 1 repair replacement welds. The alternative examinations will be made to satisfy the construction code requirement for radiographic examination. This proposed alternative ultrasonic examination will ensure an adequate level of safety and quality and will provide adequate verification that the Class 1 welds are free of significant flaws that could affect structural integrity.

Prior to the use of the alternative examination, the effectiveness of the ultrasonic techniques will be demonstrated on a qualification block containing a weld with representative flaws.

The proposed alternative method will meet the requirements of ASME Section III Code Case N-659-1, "Use of Ultrasonic Examination in Lieu of Radiography for Weld Examination Section III, Division 1" (see Enclosure 3). Duke's strategy to meet all requirements of the code case is discussed below.

(a) *Case Requirement:* The ultrasonic examination area shall include 100% of the volume of the entire weld, plus ½ in. (13 mm) of each side of the welds. The ultrasonic examination area shall be accessible and scanned by angle beam examination in four directions, two directions perpendicular to the weld axis and two directions parallel to the weld axis. Where perpendicular scanning is limited on one side of the weld, a technique using the second leg of the V-path may be credited as access for the second perpendicular examination direction provided that the detection capability of that technique is included in the procedure demonstration described in (c) and (d) below.

Duke Strategy: 100% of the volume of the entire weld, plus ½ in. of each side of the welds will be examined during the ultrasonic inspection. As can be seen in the fabrication and mock-up drawings (see Enclosures 2 and 4, respectively), all of the weld volume is accessible to be scanned by angle beam examination in two directions perpendicular to the weld axis and two directions parallel to the weld axis. Because of the weld configuration, twenty percent of the ferritic base material on the nozzle side of the weld cannot be covered in two axial and two circumferential directions but will be covered in one axial and two circumferential directions. Coverage and detection capability will be demonstrated on the qualification block.

(b) *Case Requirement:* In accordance with (a) above the ultrasonic examination shall be performed in accordance with Section V, Article 5 up to and

including the 2001 Edition or Article 4 for later edition and addenda. A straight beam and two angle beams having nominal angles of 45 and 60 deg should generally be used; however, other pairs of angle beams may be used provided the measured difference between the angles is at least 10 deg. Alternatively, ultrasonic examination that includes a straight beam may be performed by a procedure qualified in accordance with the performance demonstration methodology of Section XI, Appendix VIII provided the entire volume of the weld examination is included in the demonstration.

Duke Strategy: The ultrasonic examination shall be performed in accordance with ASME Code, Section V, 1998 Edition through the 2000 Addenda, Article 5, using automated phase array equipment. The beam angles will include 0° through 60° longitudinal waves.

(c) *Case Requirement:* A written procedure shall be followed. The procedure shall be demonstrated to perform acceptably on a qualification block or specimen with both surface and subsurface flaws as described in (d) below.

Duke Strategy: A procedure will be written and performed to demonstrate its success on the qualification block described in (d).

(d) *Case Requirement:* The qualification block material shall conform to the requirements applicable to the calibration block. The material from which blocks are fabricated shall be one of the following: a nozzle dropout from the component; a component prolongation; or material of the same material specification, product form, and heat treatment condition as one of the materials joined. For piping, if material of the same product form and specification is not available, material of similar chemical analysis, tensile properties, and metallurgical structure may be used. Where two or more base material thicknesses are involved, the calibration block thickness shall be of a size sufficient to contain the entire examination path. The qualification block configuration shall contain a weld representative of the joint to be examined, including, for austenitic materials, the same welding process. The qualification blocks shall include at least two planar flaws in the weld, one surface and one subsurface oriented parallel to the fusion line, no larger in the through-wall direction than the diameter of the applicable side-drilled hole in the calibration block shown in Fig. T-542.2.1 of Section V, Article 5, for Editions and Addenda through the 2001 Edition and T-434.2.1 of Article 4 for later Editions and Addenda and no longer than the shortest unacceptable elongated discontinuity length listed in NB-5330, NC- 5330, or ND-5330 for the thickness of the weld being examined. Where a Section XI, Appendix VIII, performance demonstration methodology is used, supplemental qualification to a previously approved procedure may be demonstrated through the use of a blind test with appropriate specimens that contain a minimum of three different construction-type and fabrication-type flaws distributed throughout the thickness of the specimen.

Duke Strategy: The qualification block, (See Enclosure 4) conforms to all material and weld requirements discussed above. The qualification block includes one surface crack and two subsurface lack of side-wall fusion flaws oriented parallel to the fusion line with dimensions meeting the specifications of ASME Code, Section V, 1998 edition, through the 2000 Addenda, Article 5, and ASME Code, Section III, 1983 edition, NB-5330.

(e) *Case Requirement:* This Case shall not be applied to weld examination volumes that include cast products forms or corrosion-resistant-clad austenitic piping butt welds.

Duke Strategy: The welds being examined do not include cast product forms or corrosion-resistant-clad austenitic piping butt welds.

(f) *Case Requirement:* A documented examination plan shall be provided showing the transducer placement, movement and component coverage that provides a standardized and repeatable methodology for weld acceptance. The examination plan shall also include ultrasonic beam angle used, beam directions with respect to weld centerline, and volume examined for each weld.

Duke Strategy: A documented examination plan containing the information requested above will be provided.

(g) *Case Requirement:* The evaluation and acceptance criteria shall be in accordance with NB-5330, NC-5330, or ND-5330, as acceptable. Any flaws characterized as surface-connected cracks, lack of fusion, or lack of penetration may be evaluated by a supplemental surface examination (MT or PT) performed in accordance with NB-5000, NC-5000, or ND-5000, as applicable.

Duke Strategy: The evaluation and acceptance criteria will be in accordance with NB-5330, and any flaws characterized as surface-connected cracks, lack of fusion, or lack of penetration may be evaluated by a supplemental surface examination (MT or PT) performed in accordance with NB-5000.

(h) *Case Requirement:* For welds subject to in-service ultrasonic examination, the examination and evaluation shall also meet the requirements of the applicable Edition of Section XI for pre-service examination.

Duke Strategy: These welds are not subject to a Section XI volumetric pre-service or in-service examination.

(i) *Case Requirement:* The ultrasonic examination shall be performed using a device with an automated computer data acquisition system.

Duke Strategy: The UT examination will be performed using a device with an automated computer data acquisition system.

(j) *Case Requirement:* Data shall be recorded in unprocessed form. A complete data set with no gating, filtering, or thresholding for response from examination volume in (a) shall be included in the data record.

Duke Strategy: Data will be recorded in its raw form and fully documented when creating data records.

(k) *Case Requirement:* Personnel who acquire and analyze UT data shall be qualified and trained using the same type of equipment as in (i), and demonstrate their capability to detect and characterize the flaws using the procedure as described in (c).

Duke Strategy: UT Level II and Level III examiners will acquire the UT data, and a UT Level III will analyze the data. All participants will demonstrate their capability to detect and characterize the flaws using the procedure prior to inspections.

(l) *Case Requirement:* Review and acceptance of the procedure by the Authorized Nuclear Inspector is required.

Duke Strategy: Review and acceptance of the procedure by the Authorized Nuclear Inspector will be achieved prior to beginning inspections.

(m) *Case Requirement:* All other related requirements of the applicable subsection shall be met.

Duke Strategy: Related requirements of the applicable subsection will be met.

(n) *Case Requirement:* Flaws exceeding the acceptance criteria referenced in this Case shall be repaired, and the weld subsequently reexamined using the same ultrasonic examination procedure that detected the flaw.

Duke Strategy: Flaws exceeding the acceptance criteria will be repaired and reexamined using the same ultrasonic examination procedure.

(o) *Case Requirement:* This Case number shall be recorded on the Data Report.

Duke Strategy: The Data Report will reference Code Case N-659-1.

VI. Justification for Granting of Alternative:

"Ultrasonic and radiographic examination methods are complimentary and are not directly comparable or equivalent. Depending on flaw type (i.e., volumetric or planar) and orientation, ultrasonic examination may be superior to radiography or vice versa. Radiography is most effective in detection of volumetric type flaws (i.e., slag and porosity) and detection of planar type flaws (i.e., lack of fusion and cracks) that are oriented in a plane parallel to the x-ray beam.

"However, radiography is limited in detection of planar flaws not oriented parallel to the beam. In contrast, ultrasonic examination is very effective in detection of planar type flaws that are not oriented in a plane parallel to the sound beam and less effective in detecting flaws in a plane parallel to the sound beam. Finally, ultrasonic examination is capable of detecting volumetric type flaws such as slag or porosity but is limited, compared to radiography, in ability to characterize volumetric flaws.

"The proposed alternative ultrasonic examination requirements and provisions address the known limitations of the ultrasonic method to ensure both planar and volumetric flaws in all orientations are detected and properly evaluated" (Reference 8). To overcome the limitations in detecting flaws in planes parallel to the sound beam, a straight beam, as well as two angle beams with a measured difference of at least 10 deg., must be scanned in two directions perpendicular and two directions parallel to the weld axis. Furthermore, to overcome the difficulties of characterizing volumetric flaws, if an indication is not characterized as volumetric, it will be characterized as a planar flaw and subjected to the acceptance criteria of NB-5330. These acceptance criteria are the same for crack-type flaws detected by RT. By meeting the requirements of ASME Section III Code Case N-659-1, assurance is provided that planar flaws, regardless of orientation, will be detected and non-planar, construction flaws will be easier to discern from inhornogeneities. According to EPRI's Technical Report (Reference 5), "the flaw types that affect the structural integrity the most are the ones most reliably detected with UT. The same cannot be said for RT examinations."

In conclusion, given their intended use as described in this alternative request, ultrasonic methods are an acceptable substitute for radiography, and therefore are in accordance with 10 CFR 50.55a(a)(3)(i); A qualified UT method would provide results equivalent or superior to the RT method specified by the ASME Code, Section III, for detecting construction related flaws. NRC staff approval is requested based on the proposed alternative examination providing an acceptable level of quality and safety.

VII. Duration of Proposed Alternative:

This relief will be implemented during the next two scheduled refueling outages for each of the three Oconee Units. Duke currently plans to replace three ONS Unit 3 level tap nozzle safe ends during the outage scheduled for April 2006. In October of 2006, Duke plans to replace all seven ONS Unit 1 level and sample tap nozzle safe ends. Replacement of the seven level and sample taps for ONS Unit 2 is expected to occur during the Spring of 2007 outage. The expected date for completion of all of the pressurizer level and sample tap replacements is by the end of 2008. The use of ASME Section III Code Case N-659-1 is requested only on these welds for the scheduled replacement and any subsequent replacement, provided these replacements occur within the current 10 year interval.

An expedited NRC staff approval is requested by March 13, 2006 to support planning and preparation activities for the ONS Unit 3 refueling outage that is scheduled to begin in April, 2006.

VIII. Precedents

This proposed alternative is similar, but not identical, to a relief request submitted by Union Electric Company's Callaway Plant in a letter dated November 18, 2004 (i.e. ADAMS Accession Number ML043450359), as approved by NRC letter dated May 19, 2005 (i.e. ADAMS Accession Number ML050760129).

This proposed alternative is similar, but not identical, to a relief request submitted by Progress Energy Carolina's Brunswick Plant in a letter dated August 9, 2005 (i.e. ADAMS Accession Number ML052280213).

IX. References:

1. Title 10 of the Code of Federal Regulations, Part 50, Section 55a, Codes and Standards (i.e., 10 CFR 50.55a)

2. ASME Code, Section XI, "Rules for Inservice Inspection of Nuclear Power Plant Components," 1998 Edition, 2000 Addenda

3. ASME Code, Section III, "Rules for Construction of Nuclear Power Plant Components," 1983 Edition

4. ASME Section III Code Case N-659-1, "Use of Ultrasonic Examination in Lieu of Radiography for Weld Examination Section III, Division 1." November 18, 2003

5. EPRI Technical Report 1003545, "Alternative Volumetric Examination Methods: UT in Lieu of RT for Repair/Replacement Activity." December 2002

6. NRC. "Safety Evaluation by the Office of Nuclear Reactor Regulation, Second Ten-year Interval Inservice Inspection Program Plan, Request for Relief to use an Alternative Examination Method, Union Electric Company, Callaway Plant, Unit 1, Docket No. 50-483." ML050760129, 05-19-2005

7. Progress Energy. "Brunswick, Units 1 & 2, Relief Request RR-36, Use of Ultrasonic Examinations in Lieu of Radiographic Non-Destructive Examinations." ML052280213, 08-09-2005

8. Union Electric Co. "Callaway, Unit 1, Request for Relief from ASME Section III Requirements Regarding Non-Destructive Examination of Welds Performed Under Site Repair/Replacement Program." ML043450359, 11-18-2004

Prepared By: Rachel L. Doss Date: 01/16/06
Rachel L. Doss

NDE Level III Review By: James J. McArdle III Date: 1/16/06
James J. McArdle III

Reviewed By: David W. Peltola Date: 01/18/2006
David W. Peltola

Framatome Fabrication Drawings

FRAMATOME ANP, INC., AN AREVA AND SIEMENS COMPANY

REVISIONS (ALL SHEETS SAME REV LEVEL)

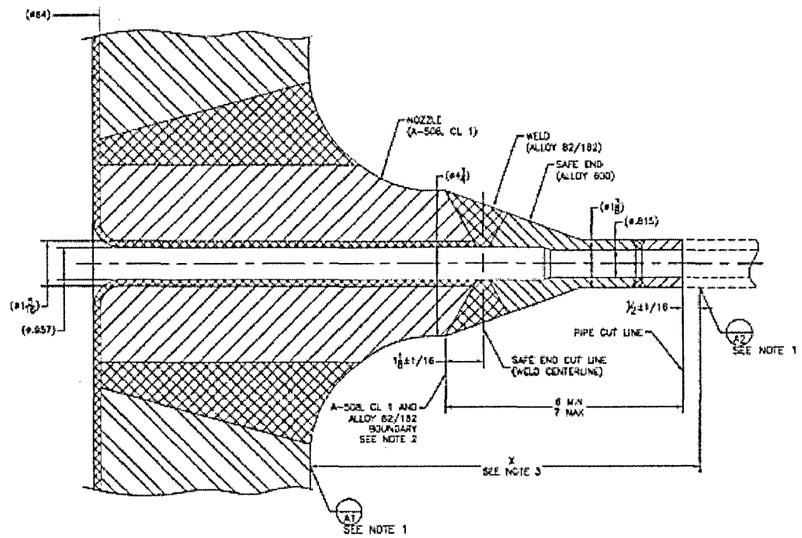

STEP 1
CUT PIPE, CUT AND
REMOVE SAFE END

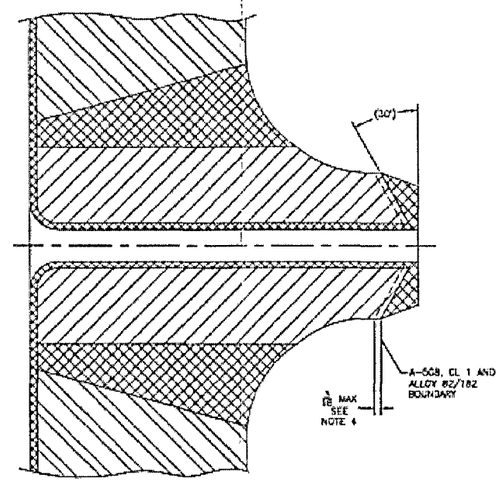

STEP 2
REMOVE ALLOY 82/182
WELD MATERIAL

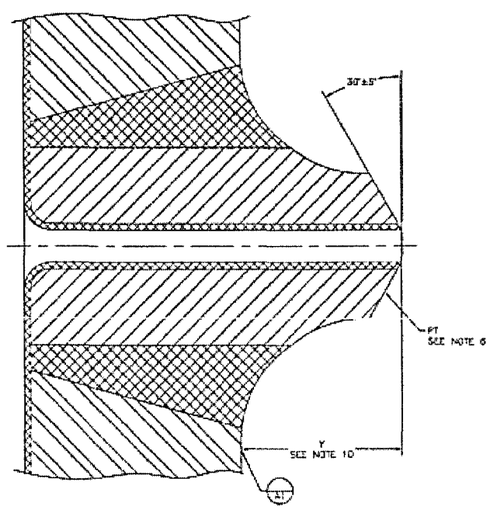

STEP 3
FORM WELD PREP

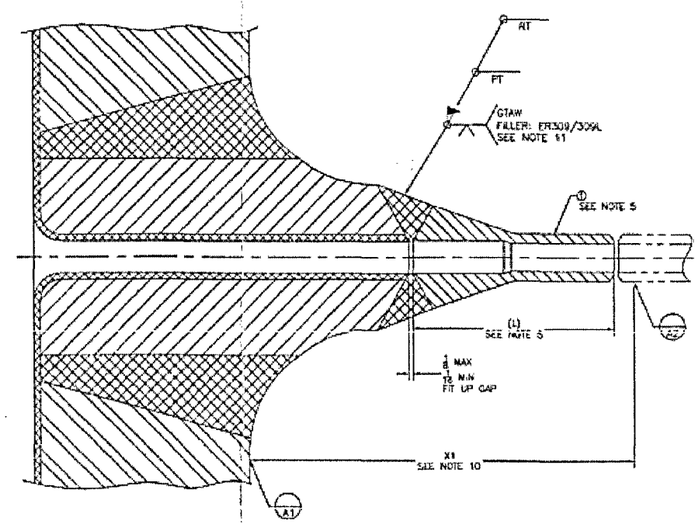

STEP 4
WELD SAFE END

BILL OF MATERIAL						
ITEM	QTY	PART NO.	DS	FP	DESCRIPTION	MATL SPEC
1	-	5066925-001	B	F	REPLACEMENT SAFE END	SEE NOTE 9

NOTES:

1. CREATE DATUM TARGETS A1 AND A2 USING A LOW STRESS MARK ON THE PRESSURIZER SHELL AND PIPE/VALVE RESPECTIVELY.

2. ETCH AS NECESSARY TO ESTABLISH WELD BOUNDARY.

3. MEASURE AND RECORD DISTANCE X BETWEEN DATUM TARGET A1 AND DATUM TARGET A2.

4. SCRIBE A LINE AROUND THE NOZZLE 3/16 INCH INBOARD (TOWARD PRESSURIZER) OF THE A-508 AND ALLOY 82/182 WELD BOUNDARY LINE. MACHINE OR GRIND TO REMOVE EXISTING ALLOY 82/182 MATERIAL. ETCH TO ENSURE ALL WELD MATERIAL IS REMOVED FROM BASE METAL. DO NOT MACHINE MORE THAN 3/16 INCH INBOARD OF ALLOY 82/182 AND NOZZLE FUSION LINE.

5. DURING REATTACHMENT OF PIPE/VALVE, THE OUTBOARD END OF THE REPLACEMENT SAFE END SHALL BE CUT TO LENGTH AND A WELD PREP FORMED IN ACCORDANCE WITH FANP DOCUMENT 02-50669268 (LATEST REVISION).

6. WELD PREP SURFACE SHALL BE PT EXAMINED PRIOR TO WELDING

7. DIMENSIONAL INFORMATION FOR THE EXISTING CONFIGURATION IS TAKEN FROM DOCUMENTS REFERENCED IN FANP DOCUMENT 51-5088930 (LATEST REVISION)

8. ALL DIMENSIONS ARE IN INCHES, UNLESS OTHERWISE SPECIFIED.

9. MATERIAL SHALL MEET THE REQUIREMENTS OF SA-479, TYPE 316 WITH A MAXIMUM CARBON CONTENT OF 0.03 WT % AND A MAXIMUM COBALT CONTENT OF 0.2 WT % AND A MINIMUM TENSILE STRENGTH OF 75 KSI.

10. AFTER REPOSITIONING PIPE/VALVE, THE DIFFERENCE BETWEEN DIMENSIONS X AND X1 SHALL BE LESS THAN 1/4". IF DIMENSION (X1-X) IS GREATER THAN 7 INCHES, THEN A SPOOL PIECE MAY BE NEEDED BETWEEN THE REPLACEMENT PIPE/VALVE AND SAFE END

11. GRIND WELD AS REQUIRED TO FACILITATE NDE.

ONS-1, ONS-2, AND ONS-3
PRESSURIZER
UPPER LEVEL SENSING
NOZZLE MODIFICATION

SHEET 1 OF 1 | SCALE NONE | DRAWING NUMBER 5066925 D | REV 0

AREVA

FRAMATOME ANP, INC., AN AREVA AND SIEMENS COMPANY

REVISIONS (ALL SHEETS SAME REV LEVEL)

REV	DESCRIPTION	DATE	APPROVALS	MF

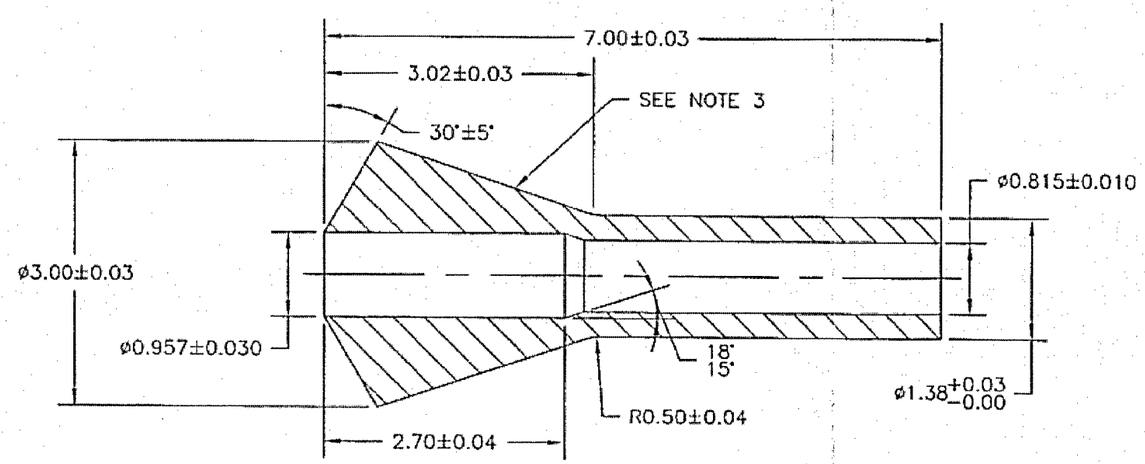

PRELIMINARY MACHINED SAFE END

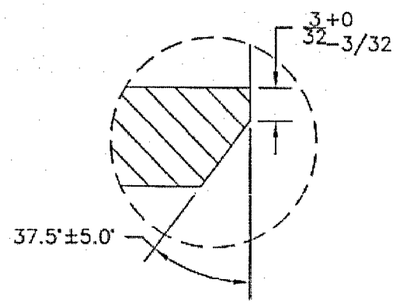

DETAIL A

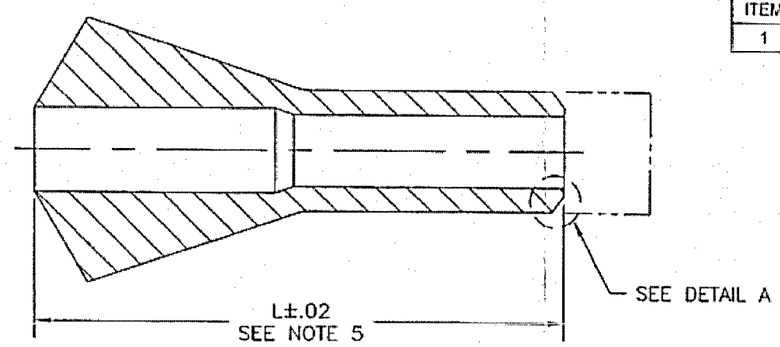

① FINAL MACHINED SAFE END

BILL OF MATERIAL

ITEM	QTY	PART NO.	DS	F/P	DESCRIPTION	MAT'L SPEC
1	-	5066926-001	B	F	REPLACEMENT SAFE END	SEE NOTE 1

NOTES:

1. THE SAFE END MATERIAL SHALL MEET THE REQUIREMENTS OF SA-479, TYPE 316 WITH A MAXIMUM CARBON CONTENT OF 0.03 WT % AND A MAXIMUM COBALT CONTENT OF 0.2 WT % AND A MINIMUM TENSILE STRENGTH OF 75 KSI AND BE IN ACCORDANCE WITH ARTICLE NB-2000 OF SECTION III OF THE ASME BOILER AND PRESSURE VESSEL CODE. THE MATERIAL WILL BE PROVIDED BY FANP.

2. LIQUID PENETRANT INSPECT ALL ACCESSIBLE NEWLY MACHINED SURFACES ON THE PRELIMINARY MACHINED AND THE FINAL MACHINED SAFE END.

3. APPLY PART IDENTIFICATION MARKINGS TO THIS SURFACE WITH A VIBRATOOL. IDENTIFICATION MARKINGS SHALL CONSIST OF THE MATERIAL HEAT NUMBER, MATERIAL SPECIFICATION, THE FANP PART NUMBER, AND A UNIQUE SERIAL NUMBER. THE REQUIRED SERIAL NUMBERING WILL BE SPECIFIED ON THE FANP PURCHASE ORDER.

4. THE PRELIMINARY MACHINED SAFE END SHALL BE 100% DIMENSIONALLY INSPECTED. ALL NEWLY MACHINED FEATURES ON THE FINAL MACHINED SAFE END SHALL BE DIMENSIONALLY INSPECTED.

5. FINAL LENGTH WILL BE DETERMINED DURING INSTALLATION. SEE FANP DOCUMENT 02-5066925D (LATEST REVISION) FOR ADDITIONAL INSTRUCTIONS.

THIRD ANGLE PROJ.

TOLERANCES ON LINEAR DIMENSIONS	0 to < 12	12 to < 48	48 OR MORE
3-PLACE MACHINED	±.003	±.010	±.031
2-PLACE MACHINED	±.02	±.06	±.18
FRACTIONAL MACHINED	±1/64	±1/16	±1/4

STRAIGHTNESS	.005/INCH, .020 MAX
FLATNESS	.005/INCH, .020 MAX
PERPENDICULARITY	.005/INCH, .020 MAX
BREAK CORNERS	.02 MAX R OR CHFR
ANGULAR DIMENSIONS	±0°30'
CHAMFER ANGLE TOLERANCE	±5°
SURFACE FINISH	125 MICROINCHES

ALL REQUIREMENTS BELOW AND AT LEFT APPLY UNLESS OTHERWISE STATED
TOLERANCE DEFINITIONS ARE PER ASME Y14.5M-1994
SURFACE FINISH DEFINITIONS ARE PER ASME B46.101995
ALL DIMENSIONS APPLY AT PART TEMPERATURE OF 68°F
CONCENTRICITY TOLERANCE .015 W.R.T. FIRST REVOLVED MACHINED FEATURE
ALL LINEAR DIMENSIONS ARE IN INCHES - DO NOT SCALE FROM DRAWING

REPLACEMENT SAFE END

DRWN BY	PASSED BY	SHEET	DATE	DRAWING NUMBER	REV
SM HUNTER	JB DISHMAN for DH WOOD	1 OF 1	7/13/05	5066926 B	0
CHKD BY JD Box	APPD BY DAVID E. WASSER	CONTRACT # 1231877	SCALE NONE		

ASME Section III Code Case N-659

Approval Date: November 18, 2003

See Numeric Index for expiration and any reaffirmation dates.

Case N-659-1
Use of Ultrasonic Examination in Lieu of Radiography for Weld Examination
Section III, Division 1

Inquiry: Under what conditions and limitations may an ultrasonic examination be used in lieu of radiography where radiography is required by NB-5200, NC-5200, ND-5200 and substitution of ultrasonic examination would not otherwise be permitted?

Reply: It is the opinion of the Committee that all welds in material ½ in. or greater in thickness may be examined using the ultrasonic (UT) method in lieu of the radiographic (RT) method, provided that all of the following requirements are met:

(a) The ultrasonic examination area shall include 100% of the volume of the entire weld, plus ½ in. (13 mm) of each side of the welds. The ultrasonic examination area shall be accessible and scanned by angle beam examination in four directions, two directions perpendicular to the weld axis and two directions parallel to the weld axis. Where perpendicular scanning is limited on one side of the weld, a technique using the second leg of the V-path may be credited as access for the second perpendicular examination direction provided that the detection capability of that technique is included in the procedure demonstration described in (c) and (d) below.

(b) In accordance with (a) above the ultrasonic examination shall be performed in accordance with Section V, Article 5 up to and including the 2001 Edition or Article 4 for later edition and addenda. A straight beam and two angle beams having nominal angles of 45 and 60 deg should generally be used; however, other pairs of angle beams may be used provided the measured difference between the angles is at least 10 deg. Alternatively, ultrasonic examination that includes a straight beam may be performed by a procedure qualified in accordance with the performance demonstration methodology of Section XI, Appendix VIII provided the entire volume of the weld examination is included in the demonstration.

(c) A written procedure shall be followed. The procedure shall be demonstrated to perform acceptably on a qualification block or specimen with both surface and subsurface flaws as described in (d) below.

(d) The qualification block material shall conform to the requiremnts applicable to the calibration block. The material from which blocks are fabricated shall be one of the following: a nozzle dropout from the component; a component prolongation; or material of the same material specification, product form, and heat treatment condition as one of the materials joined. For piping, if material of the same product form and specification is not available, material of similar chemical analysis, tensile properties, and metallurgical strusture may be used. Where two or more base material thicknesses are involved, the calibration block thickness shall be of a size sufficient to contain the entire examination path. The qualification block configuration shall contain a weld representative of the joint to be examined, including, for austenitic materials, the same welding process. The qualification blocks shall include at least two planar flaws in the weld, one surface and one subsurface oriented parallel to the fusion line, no larger in the through-wall direction than the diameter of the applicable side-drilled hole in the calibration block shown in Fig. T-542.2.1 of Section V, Article 5, for Editions and Addenda through the 2001 Edition and T-434.2.1 of Article 4 for later Editions and Addenda and no longer than the shortest unacceptable elongated discontinuity length listed in NB-5330, NC-5330, or ND-5330 for the thickness of the weld being examined. Where a Section XI, Appendix VIII, performance demonstration methodology is used, supplemental qualification to a previously approved procedure may be demonstrated through the use of a blind test with appropriate specimens that contain a minimum of three different construction-type and fabrication-type flaws distributed throughout the thickness of the specimen.

(e) This Case shall not be applied to weld examination volumes that include cast products forms or corrosion-resistant-clad austenitic piping butt welds.

(f) A documented examination plan shall be provided showing the transducer placement, movement and component coverage that provides a standardized and repeatable methodology for weld acceptance. The examination plan shall also include ultrasonic beam angle used, beam directions with respect to weld centerline, and volume examined for each weld.

(g) The evaluation and acceptance criteria shall be in accordance with NB-5330, NC-5330, or ND-5330, as acceptable. Any flaws characterized as surface-connected cracks, lack of fusion, or lack of penetration may be evaluated by a supplemental surface examination (*MT* or *PT*) performed in accordance with NB-5000, NC-5000, or ND-5000, as applicable.

(h) For welds subject to inservice ultrasonic examination, the examination and evaluation shall also meet the requirements of the applicable Edition of Section XI for preservice examination.

(i) The ultrasonic examination shall be performed using a device with an automated computer data acquisition system.

(j) Data shall be recorded in unprocessed form. A complete data set with no gating, filtering, or thresholding for response from examination volume in (a) shall be included in the data record.

(k) Personnel who acquire and analyze UT data shall be qualified and trained using the same type of equipment as in (i), and demonstrate their capability to detect and characterize the flaws using the procedure as described in (c).

(l) Review and acceptance of the procedure by the Authorized Nuclear Inspector is required.

(m) All other related requirements of the applicable subsection shall be met.

(n) Flaws exceeding the acceptance criteria referenced in this Case shall be repaired, and the weld subsequently reexamined using the same ultrasonic examination procedure that detected the flaw.

(o) This Case number shall be recorded on the Data Report.

Flaw Tech Qualification Block Drawings

FLAT OUTSIDE DIAMETER VIEW

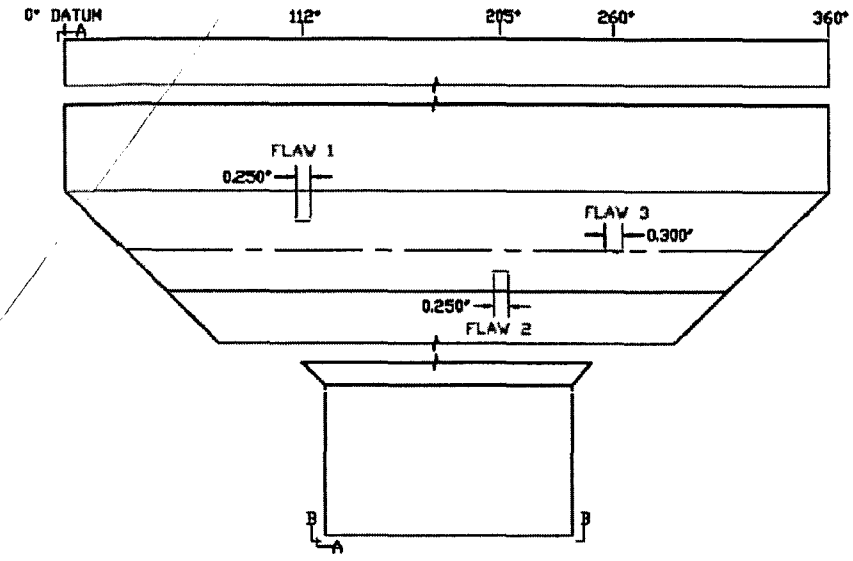

SCALE 1:2

VIEW B-B

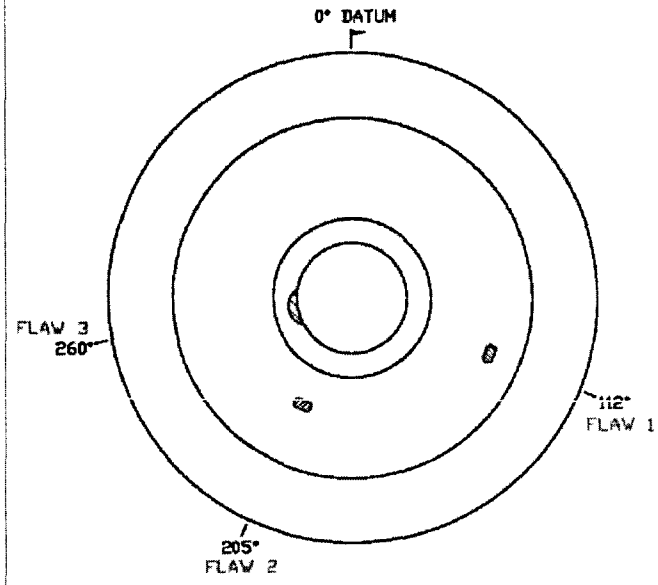

SCALE 1:1

VIEW A-A

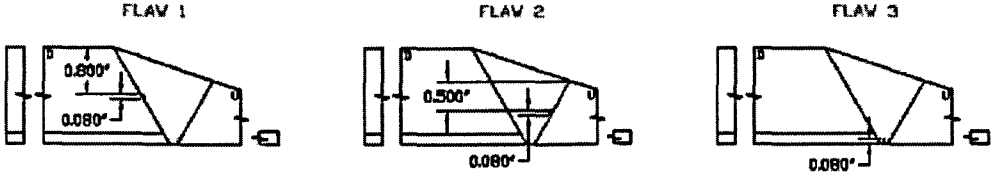

SCALE 1:2

NOTES

1. FLAW LENGTH TOLERANCE ±0.080" W/ MAX 0.320"
2. FLAW HEIGHT TOLERANCE ±0.040" W/ MAX 0.093"
3. ID STAMP ON PIPE END, NOZZLE SIDE AT 90°
4. SEE PAGE 1 OF 2 FOR MATERIAL TYPES

REVISION HISTORY			
REV	DESCRIPTION	DATE	APPR

CLIENT: DUKE ENERGY

Drawing No.: [illegible]

FlawTech
Flaw Manufacturing Technology

SPECIMEN/PART NUMBER: [illegible]

TITLE: PZR Level Safe End

DESCRIPTION: [illegible] Nozzle > 304 SS Safe End

DRAWING BY: AC | DATE: 1/5/06 | APPROVED BY: | DATE:

REVISION 0

SCALE SEE VIEW | SHEET 2 OF 2

FLAW	FLAW TYPE	UP/DOWN	FLAW ORIENTATION	FLAW DEPTH	FLAW LENGTH	FLAW HEIGHT	END REF. TO FLAW C/L	END REF. TO FLAW TIP	END REF. TO FLAW BASE	O.D. TO I.D. THICKNESS	DEGREE LOCATION	GEOMETRY/NOTES
1	Lack of Fusion	DOWN	CIRC	0.800"	0.250"	0.080"	N/A	TBD	TBD	TBD	112°	
2	Lack of Fusion	UP	CIRC	0.500"	0.250"	0.080"	N/A	TBD	TBD	TBD	205°	
3	Crack	UP	CIRC	1.275"	0.300"	0.080"	N/A	TBD	TBD	TBD	260°	