RAS 10995

Baird et al 1990

RAF-9004/2-1

U.S. NUCLEAR REGULATORY COMMISSION
In the Matter of Louisiana Energy Services L.P.
Docket No. 70-3103-ML Official Exhibit No. 170
OFFERED by: Applicant/Licensee Intervenor NIRS/PC
NRC Staff Other
IDENTIFIED on 10/26/05 Witness/Panel LES Disposal
Action Taken: ADMITTED REJECTED WITHDRAWN
Reporter/Clerk Bethany Engel

EVALUATION OF THE POTENTIAL PUBLIC HEALTH IMPACTS ASSOCIATED WITH RADIOACTIVE WASTE DISPOSAL AT A SITE NEAR CLIVE, UTAH

R.D Baird
M K. Bollenbacher
E.S. Murphy
R Shuman
F.B Klein

DOCKETED USNRC
2005 DEC 21 PM 3: 30
OFFICE OF THE SECRETARY
RULEMAKINGS AND ADJUDICATIONS STAFF

June 1990

Prepared For
State of Utah
Department of Health
Bureau of Radiation Control

Through
TetraTech, Inc.
Utah Department of Health Contract No. 90 1306

Rogers and Associates Engineering Corporation
P O Box 330
Salt Lake City, Utah 84110-0330

9209080079 911219
PDR FOIA
FAUGHT91-394 PDR

Template=SECY-028

SECY-02

TABLE OF CONTENTS

Chapter		Page No.
EXECUTIVE SUMMARY		ES-1
1	INTRODUCTION	1-1
2	METHODOLOGY	2-1
2.1	Risk Assessment Methodology	2-1
2.1.1	Contaminant Release Mechanisms	2-3
2.1.2	Transport Pathways	2-4
2.1.3	Exposure Pathways	2-5
2.2	The PATHRAE Computer Model	2-6
2.2.1	Model Description	2-6
2.2.2	Transport Pathways Modeled	2-7
2.2.3	Environmental Foodchain Analysis	2-11
2.2.4	Time Period for the Analyses	2-12
2.2.5	Exposure Scenarios	2-12
2.3	Dose Criteria	2-13
3	REGULATORY ASSESSMENT	3-1
3.1	Introduction	3-1
3.2	Utah Regulations for Land Disposal of Radioactive Wastes	3-2
3.2.1	Disposal Facility Performance Objectives	3-3
3.2.2	Disposal Site Suitability Requirements	3-4
3.2.3	Disposal Facility Design Requirements	3-5
3.2.4	Disposal Facility Operating Requirements	3-6
3.2.5	Closure and Post-Closure Requirements	3-7
3.2.6	Environmental Monitoring	3-7
3.3	Regulation of Mill Tailings and Wastes	3-8
3.3.1	EPA Standards	3-8
3.3.2	NRC Standards	3-10

TABLE OF CONTENTS
(Continued)

Chapter			Page No.
	3.4	Disposal Standards for the Vitro Tailings	3-13
	3.5	Proposed BRC Standards	3-15
	3.5.1	Definition of BRC Waste	3-15
	3.5.2	Criteria for Designation of Waste as BRC	3-16
	3.5.3	Proposed BRC Dose Criteria	3-17
	3.5.4	Efforts to Develop BRC Standards	3-19
	3.6	Proposed Standards for the Clive Disposal Facility	3-20
	3.6.1	Dose Criteria	3-20
	3.6.2	Regulatory Standards	3-23
4	DISPOSAL SYSTEM CHARACTERISTICS		4-1
	4.1	Site Characterization	4-1
	4.2	Disposal Cell Characterization	4-5
	4.3	Radionuclide Inventory	4-8
5	RISK ASSESSMENTS AND RESULTING WASTE DISPOSAL LIMITS		5-1
	5.1	Exposure Scenarios	5-1
	5.1.1	On-Site Workers	5-2
	5.1.2	Maximum Exposed Off-Site Individual	5-2
	5.1.3	Intruder-Explorer	5-4
	5.1.4	Intruder-Construction	5-4
	5.1.5	Intruder-Agriculture	5-5
	5.2	Dose Assessment Results	5-6
	5.3	Radionuclide Concentration Limits	5-11
	5.4	Comparison with GENII Results	5-16
	5.5	Comparison with 10 CFR 61 Class A Limits	5-18
6	IMPLEMENTATION CONSIDERATIONS		6-1
	6.1	Assuring Compliance with Concentration Limits	6-1

LIST OF TABLES

Table No.		Page No.
2-1	Pathways for Exposures to Individuals	2-14
3-1	Groundwater Protection Limits for Radioactivity	3-11
3-2	Comparison of Waste Disposal Requirements and Risks	3-22
3-3	Classification Summary for Waste Disposal Regulations	3-24
4-1	Site Parameter Values	4-6
4-2	Disposal Cell Parameter Values	4-9
4-3	Radionuclides Evaluated for Disposal at the Clive Facility	4-10
5-1	Exposure Pathways Used in Dose Assessments	5-3
5-2	Pathway Dose Rates by Nuclide	5-7
5-3	Dose Rates and Concentration Limits by Nuclide for Each Exposure Scenario	5-12
5-4	Radionuclide Concentration Limits	5-14
5-5	Radionuclide Concentration Limits Calculated Using PATHRAE and GENII	5-17
5-6	Comparison of Limiting Radionuclide Concentrations in Clive Facility Wastes with Class A Waste Concentration Limits in 10 CFR 61	5-19

LIST OF FIGURES

Figure No.		Page No.
2-1	Hydrologic and Atmospheric Pathways for Potential Release and Transportation of Radionuclides from a Disposal Facility	2-2
2-2	Major Exposure Pathways for PATHRAE-EPA	2-8
4-1	Location of Clive Facility in Tooele County	4-2
4-2	Location of Clive Facility Relative to the Vitro Site	4-3
4-3	Cross Section of Disposal Cell	4-7

TABLE OF CONTENTS
(Continued)

Chapter		Page No.
6.2	Sum of Fractions Rule	6-4
6.3	Waste Form Restrictions	6-4
6.4	Surface-Contaminated Material	6-5
7	SUMMARY	7-1
APPENDIX A -- NUCLIDE-SPECIFIC PARAMETER VALUES		A-1
APPENDIX B -- EVALUATION OF THE POTENTIAL FOR WATER TO ACCUMULATE IN CLIVE DISPOSAL UNITS		B-1
APPENDIX C -- THE GENII COMPUTER MODEL		C-1
REFERENCES		R-1

EXECUTIVE SUMMARY

The Utah Department of Health, Bureau of Radiation Control (UDH/BRC) regulates a radioactive waste disposal facility near Clive, Utah that is currently licensed to receive and dispose of naturally occurring radioactive material (NORM) wastes. UDH/BRC anticipates the possibility that the licensee may apply to the state to allow the disposal of other large volume wastes (e.g., contaminated soil and contaminated structural materials) with low concentrations of other than NORM radioactive constituents.

This report documents an assessment of the potential public health impacts associated with radioactive waste disposal at the Clive facility. The purpose of this report is to identify limits on radionuclide concentrations in the wastes proposed for disposal to ensure that radiological doses to persons who might be exposed do not exceed prescribed regulatory limits.

E.1 METHODOLOGY

The PATHRAE computer model was used to estimate potential radiological doses (effective whole-body dose equivalent) to workers and the general public from radioactive waste disposal at the Clive facility. PATHRAE was developed for the U.S. Environmental Protection Agency (EPA) to assist in the development of generally applicable environmental standards for the land disposal of low-level radioactive waste (LLW). PATHRAE models both off-site and on-site pathways through which persons may come in contact with contaminated waste materials. The off-site pathways include groundwater transport to a river or a well, surface (wind or water) erosion, facility overflow, and atmospheric transport. The on-site pathways include direct gamma exposure, dust inhalation, food grown on the waste site, biointrusion, and radioactive gas inhalation.

For this assessment of the radiological risks from waste disposal at the Clive facility, potential exposures to on-site workers, off-site members of the general public, and post-closure site reclaimers were evaluated. Three reclaimer scenarios -- intruder explorer, intruder-construction, and intruder-agriculture were modeled.

Exposures to individuals were calculated based on unit concentrations (1 pCi/g) of each radionuclide postulated to be present in waste disposed at the Clive facility. The unit concentration dose results were then combined with applicable dose criteria to infer proposed concentration limits for the safe disposal of waste at the Clive facility. The quotients of the applicable dose criteria divided by the unit concentration dose results provided scaling factors by which the unit concentrations were multiplied to determine the maximum permissible concentrations of radionuclides in the waste.

E.2 REGULATORY ASSESSMENT

State and federal regulations were reviewed to identify requirements that may be applicable to waste disposal at the Clive facility and to identify dose criteria to be used in this risk assessment. State of Utah regulations for the land disposal of radioactive waste, which are modeled after and closely parallel the NRC's licensing requirements in 10 CFR 61, were found to be generally applicable to the regulation of the Clive disposal facility. Dose criteria (in terms of effective whole-body dose equivalent) adopted for this analysis include:

- 25 mrem/yr to any maximally exposed off-site individual and to the intruder-explorer.
- 100 mrem/yr for chronic exposure to a reclaimer after site closure (the intruder-agriculture scenario).
- 500 mrem for acute exposure to a reclaimer after site closure (the intruder-construction scenario).
- 1,250 mrem/quarter to an on-site worker during disposal operations.

E.3 DISPOSAL SYSTEM CHARACTERISTICS

The Clive disposal site is located in Tooele County approximately 140 km (85 road miles) west of Salt Lake City along Interstate 80. The facility is directly south of and adjacent to the cell used for the disposal of mill tailings that were removed from the former Vitro Chemical company site in South Salt Lake City between 1984 and 1988.

The climate at the Clive site is arid desert with an average annual rainfall of about 13 cm (5 in) per year. The water in the groundwater system beneath the site is briny and contains high total dissolved solids and certain naturally-occurring radionuclides that make it unfit for human consumption. There are no perennial surface water bodies within 3.2 km (2 mi) of the site, nor even gullies that would indicate intermittent channelized flow.

Most of the land within a 16 km (10 mi) radius of the site is public domain administered by the Bureau of Land Management. There are no industrial, commercial, or residential activities within at least 10 miles of the site, and the lack of potable water makes the surrounding area an improbable location for any future developments, although the Clive area has recently been zoned for hazardous waste disposal by Tooele County.

The material proposed for disposal at the Clive facility will be placed into a disposal cell constructed partly above grade and partly below grade which is currently used for the disposal of NORM waste. The bottom of the cell consists of a scarified and re-compacted clay liner to retard seepage from the cell into undisturbed soil. The cell cover consists of a 2.30 m (7.5 ft) thick compacted clay liner which serves as a radon barrier, a 0.15 m (0.5 ft) thick layer of sand, and a 0.45 m (1.5 ft) thick layer of rip-rap. The top of the cell is sloped to facilitate runoff of rainwater.

Wastes being considered for disposal include contaminated soil and structural debris with very low concentrations of radionuclides. Radionuclides assumed to be present include nuclides commonly encountered in radioactive materials and transuranics. For this analysis the radionuclides are considered to be dispersed more or less uniformly throughout the waste.

E.4 RISK ASSESSMENT

The exposure scenarios evaluated for this risk assessment of waste disposal at the Clive facility and the exposure pathways included in the characterization of each exposure scenario are shown in Table E-1.

Exposure pathways evaluated for on-site workers included dust inhalation and direct gamma exposure. These same exposure pathways were evaluated for an off-site individual during facility operations. For an off-site individual after site closure, the potential exposure pathways include groundwater, surface-water, and surface erosion pathways. Doses to an off-site individual from each of these pathways were all estimated to be zero for the 1,000-year period of the evaluation.

Since the intruder-explorer does not disturb the disposed waste, the only exposure pathway evaluated for this reclaimer was direct gamma exposure. Pathways evaluated for the construction intruder were direct gamma exposure and dust inhalation. Exposure pathways evaluated for the agricultural intruder included direct gamma exposure, dust inhalation, food consumption, and groundwater to a well. For the intruder-construction and intruder-agriculture scenarios, dose assessments were made at the end of the 30-yr custodial period and 1,000 years after site closure.

The assumed exposure scenarios for the off-site individual and the agricultural intruder are standard risk assessment scenarios. However, they are certainly conservative, and possibly unrealistic, for the Clive facility. No off-site individual currently lives within 24 km (15 mi) of the site. Because of the arid climate, briny quality of the groundwater that makes it unfit for human consumption, and lack of perennial surface water, it is very unlikely that anyone would choose to live near or engage in agriculture on the Clive site.

Exposure pathway doses, based on assumed 1 pCi/g radionuclide concentrations in the waste, were calculated for each of the exposure pathways shown in Table E-1. The exposure pathway doses were then summed to obtain projected doses to individuals for each exposure scenario. Since, in evaluating pathway doses, the entire radionuclide inventory was

TABLE E-1

EXPOSURE PATHWAYS USED IN DOSE ASSESSMENTS

Exposure Pathways	Exposure Scenario						
	Intruder Construction		Intruder Agriculture		Intruder Explorer	Maximum Off-site Individual	On-Site Worker
	30 yrs	1000 yrs	30 yrs	1000 yrs			
Groundwater to Surface Discharge						•	
Groundwater to 1 m Well at 30 years			•				
Groundwater to 1 m Well at 1000 years				•			
Erosion to River						•	
Site Overflow to Surface Water						•	
Food Grown on Site at 30 Years			•				
Food Grown on Site at 1000 Years				•			
Direct Gamma - Maximum Explorer					•		
Direct Gamma - Agricultural at 30 years			•				
Direct Gamma - Agricultural at 1000 years				•			
Direct Gamma - Construction at 30 years	•						
Direct Gamma - Construction at 1000 years		•					
Direct Gamma - Operational On-site							•
Direct Gamma - Operational Off-site						•	
Dust - Agricultural at 30 years			•				
Dust - Agricultural at 1000 years				•			
Dust - Construction at 30 years	•						
Dust - Construction at 1000 years		•					
Dust - Operational On-site							•
Atmospheric Transport of Dust Off-site						•	

postulated to be available for producing exposure via that pathway, summing the pathway doses results in conservatively high estimates of total doses to potentially exposed individuals.

E.5 RADIONUCLIDE CONCENTRATION LIMITS

A scenario concentration limit for each nuclide postulated to be present in the waste was calculated for each exposure scenario on the basis of the calculated 1 pCi/g dose and the dose limit for that scenario. A proposed overall concentration limit for each nuclide was then obtained by using the most restrictive (smallest) of the exposure scenario concentration limits. Proposed radionuclide concentration limits for waste disposal at the Clive facility, and the exposure scenarios that provide the bases for these limits, are shown in Table E-2.

In the vast majority of instances, when all exposure scenarios are considered, the scenario that results in the limiting radionuclide concentration is the maximum exposed off site individual scenario. For three nuclides the limiting concentration is determined by the on-site worker scenario, and for three nuclides the limiting concentration is determined by the intruder-agriculture scenario. However, as already noted, neither the maximum off-site individual scenario nor the intruder-agriculture scenario may be realistic for the Clive facility. If these scenarios are excluded, then the on-site worker scenario becomes the limiting scenario for all radionuclides. The corresponding radionuclide concentration limits increase by factors ranging from a few percent to several orders of magnitude.

As shown in Table E-2, some of the suggested limiting concentrations in Clive wastes exceed the 2,000 pCi/g limit used by the U.S. Department of Transportation (DOT) to determine if a waste shipment is considered radioactive material and should be labeled and placarded as radioactive material during transport. Suggested limiting concentrations in Clive wastes are generally either smaller or almost the same as limiting concentrations in 10 CFR 61 Class A wastes.

TABLE E-2

SUGGESTED RADIONUCLIDE CONCENTRATION LIMITS

	All Scenarios Considered			Unrealistic Scenarios Excluded**		
Nuclide	Limiting Exposure Scenario	Concentration Limit (pCi/g)	Does Allowable Concentration Exceed DOT 2,000 pCi/g Limit?	Limiting Exposure Scenario	Concentration Limit (pCi/g)	Does Allowable Concentration Exceed DOT 2,000 pCi/g Limit?
Am-241	Offsite Individual	1.7E+02		Maximum worker	2.3E+02	
Am-243	Offsite Individual	1.7E+02		Maximum worker	1.7E+03	
C-14	Intruder Ag (1000)	1.5E+02		Maximum worker	2.4E+09	Yes
Cd-109	Maximum worker	4.6E+04	Yes	Maximum worker	4.6E+04	Yes
Cm-242	Offsite Individual	1.6E+05	Yes	Maximum worker	1.4E+06	Yes
Cm-242*	Offsite Individual	1.6E+02		Maximum worker	6.1E+03	Yes
Cm-243	Offsite Individual	1.1E+02		Maximum worker	1.5E+03	
Cm-243*	Offsite Individual	6.5E+01		Maximum worker	1.3E+03	
Cm-244	Offsite Individual	4.5E+02		Maximum worker	2.7E+04	Yes
Cm-244*	Offsite Individual	1.2E+02		Maximum worker	7.4E+03	Yes
Co-57	Offsite Individual	1.7E+02		Maximum worker	1.9E+04	Yes
Co-60	Offsite Individual	6.3E+00		Maximum worker	3.6E+02	
Cs-134	Offsite Individual	1.1E+01		Maximum worker	1.2E+03	
Cs-137	Offsite Individual	2.8E+01		Maximum worker	5.6E+02	
Fe-55	Maximum worker	1.8E+06	Yes	Maximum worker	1.8E+06	Yes
H-3	Offsite Individual	2.3E+09	Yes	Maximum worker	1.4E+11	Yes
I-129	Intruder Ag (1000)	2.5E+03	Yes	Maximum worker	3.1E+03	Yes
Mn-54	Offsite Individual	2.2E+01		Maximum worker	5.6E+03	Yes
Na-22	Offsite Individual	6.4E+00		Maximum worker	7.8E+02	
Nb-94	Offsite Individual	1.1E+01		Maximum worker	1.6E+02	
Ni-59	Maximum worker	6.9E+04	Yes	Maximum worker	6.9E+04	Yes
Ni-63	Offsite Individual	1.5E+07	Yes	Maximum worker	8.5E+08	Yes
Np-237	Offsite Individual	1.7E+02		Maximum worker	2.0E+03	Yes
Pu-238	Offsite Individual	2.1E+02		Maximum worker	1.1E+04	Yes
Pu-238*	Offsite Individual	1.6E+02		Maximum worker	8.2E+03	Yes
Pu-239	Offsite Individual	1.7E+02		Maximum worker	9.9E+03	Yes
Pu-240	Offsite Individual	1.7E+02		Maximum worker	1.0E+04	Yes
Pu-241	Offsite Individual	1.3E+04	Yes	Maximum worker	8.6E+05	Yes
Pu-241*	Offsite Individual	8.6E+01		Maximum worker	1.1E+03	
Pu-242	Offsite Individual	1.8E+02		Maximum worker	1.0E+04	Yes
Ra-226	Offsite Individual	2.3E+03	Yes	Maximum worker	1.8E+04	Yes
Ra-226*	Offsite Individual	1.1E+01		Maximum worker	1.5E+02	
Ru-106	Offsite Individual	2.7E+06	Yes	Maximum worker	1.7E+08	Yes
Ru-106*	Offsite Individual	8.0E+01		Maximum worker	1.9E+04	Yes
Sn-113	Offsite Individual	3.2E+03	Yes	Maximum worker	7.3E+05	Yes
Sr-90	Offsite Individual	8.3E+04	Yes	Maximum worker	5.5E+06	Yes
Sr-90*	Offsite Individual	8.3E+04	Yes	Maximum worker	5.4E+06	Yes
Tc-99	Intruder Ag (1000)	1.7E+01		Maximum worker	6.7E+08	Yes
Th-230	Offsite Individual	2.7E+02		Maximum worker	1.5E+04	Yes
Th-232	Offsite Individual	5.4E+01		Maximum worker	3.3E+03	Yes
Th-232*	Offsite Individual	7.1E+00		Maximum worker	1.0E+02	
U-234	Offsite Individual	6.6E+02		Maximum worker	3.7E+04	Yes
U-235	Offsite Individual	1.1E+02		Maximum worker	7.7E+02	
U-236	Offsite Individual	7.1E+02		Maximum worker	3.6E+04	Yes
U-238***	Offsite Individual	7.1E+02		Maximum worker	2.8E+04	Yes
U-Nat.	Offsite Individual	6.8E+02		Maximum worker	1.8E+04	Yes
Zn-65	Offsite Individual	3.4E+01		Maximum worker	1.1E+04	Yes

* Denotes dose rates generated by nuclide plus its significant daughters in equilibrium.

** Unrealistic scenarios are off site individual and intruder-agriculture

*** Appropriate for depleted uranium provided the waste form is similar to sandy or loamy soil

E.6 POTENTIAL FOR WATER ACCUMULATION IN CLIVE DISPOSAL UNITS

Because the soil at the Clive site has low permeability, the potential exists for the accumulation of water that infiltrates into the disposal units through the engineered cover system. If sufficient water percolates into the disposal units and accumulates, the water might eventually overflow the units and spill onto the ground, posing a radiological hazard to site intruders.

Two computer models, the HELP model and the UNSAT-H model, were used to evaluate the potential for water accumulation in the Clive disposal units. The results of the computer simulations showed that it is unlikely that water will accumulate in these disposal units. However, the potential for water accumulation depends on the hydraulic conductivity of the native soil immediately below the units. If the hydraulic conductivity of this material is significantly reduced through compaction of the soil during disposal unit construction, water might accumulate in the units after they are filled with waste and capped.

E.7 IMPLEMENTATION CONSIDERATIONS

The concentration limits in Table E-2 can be implemented by applying them to individual shipping vehicles (e.g., individual trucks or rail cars), to entire shipments (e.g., to a trainload of waste comprising several rail cars), or to all of the waste shipped to the site by a particular generator during a year. The most conservative and straightforward approach is to apply these limits to each individual shipping vehicle bringing waste to the disposal facility. This approach should generally yield annual average concentrations at the disposal facility that are much smaller than the concentration limits of Table E-2.

The least conservative approach is to allow each waste generator to conform to the concentration limits on an annual basis. This approach would be the most difficult to control in terms of assuring concentration limit compliance. Furthermore, this approach could result in some shipments being received at the disposal site with very high radionuclide concentrations that could pose waste handling and exposure problems to on-site workers.

The limiting concentrations in Table E-2 are for individual radionuclides in the waste. For a waste shipment containing mixtures of radionuclides, the allowable total concentration would be determined by the sum-of-fractions rule.

The waste concentration limits presented in this document are based on analyses that assume the waste to be contaminated soil or construction debris with radionuclides dispersed more or less uniformly throughout the material. If waste is received that is substantially more finely divided, and therefore more dispersible, additional limitations on concentration or handling procedures may be required to assure adequate protection. If some construction debris is received which has only surface contamination, disposal operations will tend to break up the material and mix it with other waste disposed at the facility. Therefore, it is probably not necessary to impose restrictions on the receipt of surface contaminated material which are different from those imposed on material for which the radionuclides are dispersed throughout the waste.

1. INTRODUCTION

This report documents an assessment of the potential public health impacts associated with radioactive waste disposal at a facility near Clive, Utah. The assessment includes evaluations of potential radiological doses* from wastes disposed at a facility near Clive, Utah and suggested limits on radionuclide concentrations to ensure that these doses do not exceed prescribed regulatory limits.

The Utah Department of Health, Bureau of Radiation Control (UDH/BRC) is responsible for regulating certain activities involving the disposal of radioactive wastes. Rogers and Associates Engineering Corporation (RAE) is providing technical assistance to UDH/BRC to determine limits on the radionuclide concentrations that might apply to the disposal of radioactive wastes at a facility near Clive, Utah. The facility is currently licensed to receive and dispose of naturally occurring radioactive material (NORM) wastes. UDH/BRC anticipates the possibility that the licensee may apply to the state to allow the disposal of other large-volume wastes with low concentrations of other than NORM radioactive constituents. Wastes being considered for disposal include contaminated soil, and contaminated structural materials. While these wastes might require disposal at a regulated facility, the large volumes and low specific activities have precluded their acceptance for disposal at currently licensed low-level radioactive waste (LLW) disposal facilities. The radionuclide concentration limits to be determined for the disposal of these wastes are those that should be imposed to assure protection of the public health and the environment.

This assessment involves the characterization of the natural site, the disposal facility, and the waste to be disposed. Based on this system characterization, the potential release and migration of radioactivity from the facility and the impacts in terms of radiation exposures to humans are conservatively evaluated. The PATHRAE computer model is used to estimate potential radiological doses to workers and the general public from unit radionuclide concentrations in wastes disposed at the Clive facility. Applicable dose and risk

---

* Throughout this report the term "*dose*" refers to the effective whole-body dose equivalent measured in mrem.

criteria are identified to provide a basis for inferring limits on the radionuclide concentrations. The radionuclide concentration limits are then calculated on the basis of the doses for unit radionuclide concentrations, and the applicable dose criteria.

Chapter 2 of this report provides a description of the methodology used for this assessment. This includes an overview of risk assessment methodology and a brief description of the PATHRAE computer model used to project potential doses from waste disposal operations.

Chapter 3 is a review of federal and state radioactive waste disposal standards and requirements that could provide guidance for regulating the disposal facility near Clive. A primary objective of this review is the identification of applicable or relevant dose criteria to be used in establishing radionuclide concentration limits.

Chapter 4 is a presentation of the information and assumptions used to simulate the disposal system at the Clive site and to perform the risk assessment. The site, the disposal cell, and the waste are all characterized in sufficient detail to provide the information necessary for the dose calculations.

Chapter 5 presents the results of the risk assessment and the radionuclide concentration limits derived on the basis of this assessment and the dose criteria identified in Chapter 3. The proposed radionuclide concentration limits for Clive disposal are compared with concentration limits for 10 CFR 61 Class A LLW and typical LLW with low levels of radioactive content.

Chapter 6 presents the basic requirements of an implementation plan to ensure compliance with the radionuclide concentration limits proposed in Chapter 5.

2. METHODOLOGY

The objective of this investigation is to determine limits for radionuclides in wastes that can be safely disposed at a radioactive waste disposal site near Clive, Utah. To determine these limits, a risk assessment is performed that evaluates projected doses (effective whole-body dose equivalent) from unit concentrations of radionuclides in the wastes proposed for disposal. The risk assessment results are then combined with applicable dose criteria to infer limits on the concentrations of radionuclides that can be allowed at the subject facility without endangering public health.

This chapter provides a description of the methodology used in this assessment. Section 2.1 is an overview of risk assessment methodology. Section 2.2 is a description of the PATHRAE computer model used to project potential doses to individuals from the proposed disposal operations. Section 2.3 is a summary of the dose criteria used to establish radionuclide concentration limits for wastes disposed at the Clive site.

2.1 RISK ASSESSMENT METHODOLOGY

Risk assessment consists of estimating releases of radioactive contaminants from the disposal facility; modeling the transport of radionuclides to locations accessible to humans; and calculating exposures or doses to persons coming in contact with the contamination. The calculations must account for all reasonable opportunities for human exposure to radiation originating from the waste. Figure 2-1 schematically represents the disposal facility in relation to the environment and depicts the pathways through which contaminants are released and transported to receptor points. These pathways are discussed in the following sections.

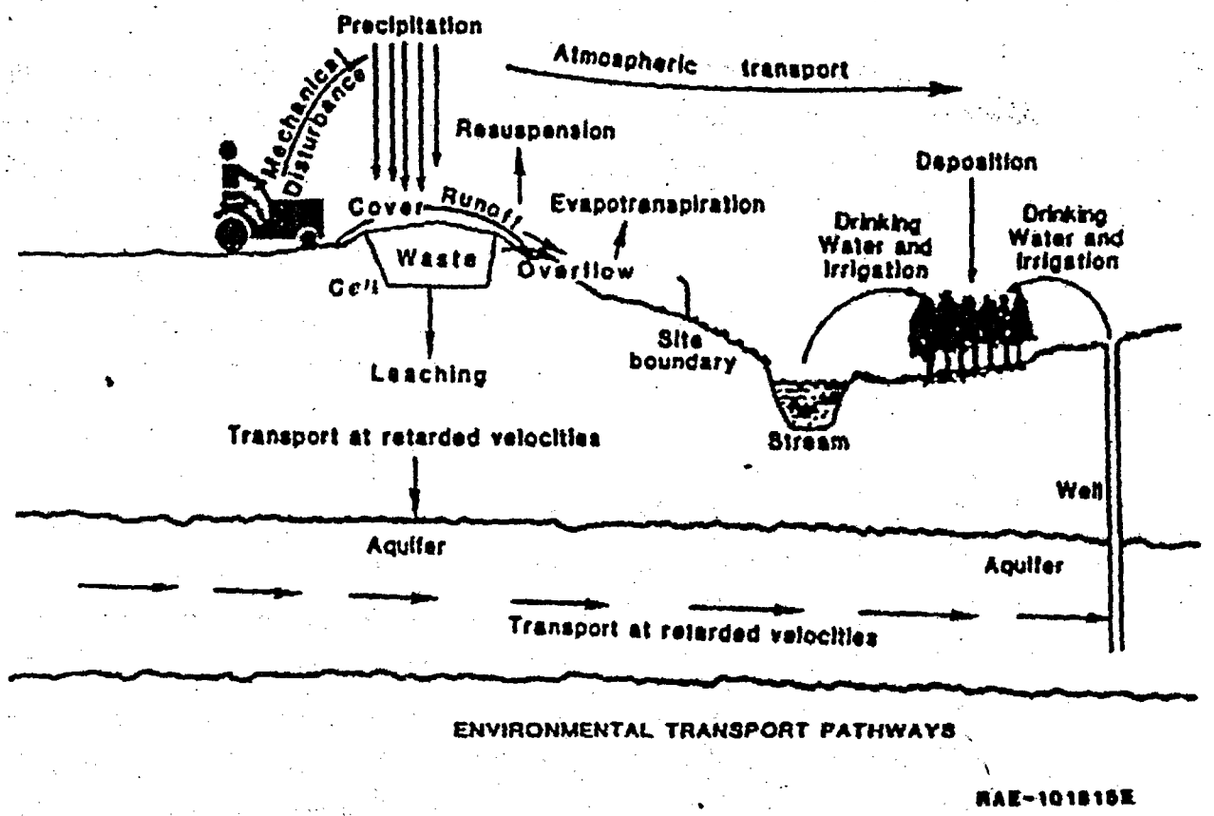

FIGURE 2-1. HYDROLOGIC AND ATMOSPHERIC PATHWAYS FOR POTENTIAL RELEASE AND TRANSPORTATION OF RADIONUCLIDES FROM A DISPOSAL FACILITY.

2.1.1 Contaminant Release Mechanisms

The means by which radionuclides may be released from a disposal site to the environment depend upon site conditions and the nature of the disposal facility. Generally speaking, release mechanisms may be classified as resuspension, leaching, and accidental release.

Resuspension

Resuspension of surface contamination may play an important role in the dispersal of radionuclides from disposal units in arid regions. The resuspended contamination may be from waste that has not yet been covered, spillage of contaminants during operations, material excavated from a disposal cell by human or animal activity, or waste exposed due to wind or water erosion of the earthen cover over the disposal cell. In any event, the contaminants so mobilized are available for subsequent transport downwind from the facility.

Leaching

At many sites, water is the most important medium for the mobilization of radionuclides from the disposal unit. Water infiltrating into the disposal unit will leach contaminants from the waste. The water infiltration rate will depend upon the precipitation rate at the disposal site, hydrogeologic properties of the soil, and natural features of the site or engineered features of the disposal system that channel runoff or divert it from the disposal units. The rate of leaching will be influenced by the amount of water passing through the waste, the waste form, and nuclide-specific properties such as distribution coefficients.

Because the Clive site is located in an arid region, the importance of water as a contaminant release mechanism will not be as great as it is for disposal sites in regions of high average rainfall.

Accidental Releases

Accidental releases differ from the mechanisms described above in that they are generally sudden, in contrast to the more deliberate nature of atmospheric (i.e., resuspension) and hydrologic releases. Accidental releases are also discontinuous; i.e., they typically have both a beginning and an ending. Fires that sometimes accompany accidents can result in the volatilization of radioactive material and its dispersal downwind from the site of the accident. In other radiological assessments, the doses associated with accidental releases have not been limiting.[1] Therefore, in this assessment, doses from accidental releases are not evaluated.

2.1.2 Transport Pathways

Waste contaminants released from a disposal facility are available for transport to locations where they can come in contact with humans. As depicted in Figure 2-1, transport mechanisms may include atmospheric, hydrologic, and foodchain pathways.

Atmospheric Pathways

Airborne contaminants (e.g., those contaminants released as a result of resuspension) will be dispersed as they are transported by the prevailing winds. The atmospheric concentrations of contaminants at downwind locations are calculated with a Gaussian plume atmospheric dispersion model which uses a virtual point source approximation for area sources. The plume of suspended radionuclides is assumed to move at a height-independent wind speed to the receptor location. The model accounts for plume depletion, effective plume height, and stable air layers at high altitudes. Neutral atmospheric stability is generally assumed to prevail.

Hydrologic Pathways

Hydrologic pathways include groundwater and surface water pathways. Both of these pathways can result in the migration of radionuclides from the disposal site to locations where humans are exposed through using contaminated water for culinary or other purposes.

In the groundwater flow model, radioactive contaminants leached from the waste are transported vertically to the aquifer, then horizontally through the aquifer to a well or river. Transport velocities may be calculated using either saturated or unsaturated flow models. Contaminants migrating along hydrologic flow paths typically move more slowly than the water in these paths, due to nuclide-specific interactions of the contaminants with the solid materials in the aquifer. This phenomenon is called adsorption which results in retarded radionuclide migration rates.

Depending on precipitation, infiltration rate, and hydrogeologic characteristics, water contaminated with radionuclides may overflow the disposal cells and discharge onto the natural surface of the site. When this occurs, radioactive contamination is added to the surface inventory of nuclides already present from operational spillage or from erosion, if any, of the disposal cell cover. This ground surface contamination will consist of two components: The dissolved and adsorbed fractions. Dissolved radionuclides may enter nearby surface streams by overland flow, thus adding contamination to the surface streams. Adsorbed radionuclides enter the soil and contribute to the external gamma exposure of persons standing on the surface or enter plant systems through root uptake.

Food Chain Pathways

Plants may become contaminated through the root uptake of radioactivity in the soil or surficially as a result of deposition of air-borne radionuclides. Well and stream water used for irrigation can also deposit radionuclides on or in the soil with subsequent uptake by plants. Animal products, including meat and milk, may become contaminated due to animal consumption of contaminated feed or consumption of water from a contaminated well or stream.

2.1.3 Exposure Pathways

The potential routes through which people may be exposed to radioactive materials at receptor locations are called exposure pathways. These may be categorized as external

(direct gamma) exposure and internal exposure. Internal exposure results from inhalation of airborne contaminants and ingestion of contaminated foodstuffs and water

2.2 THE PATHRAE COMPUTER MODEL

2.2.1 Model Description

Potential risks to individuals from waste disposal at the Clive facility were estimated using the PATHRAE computer model.[2] The PATHRAE model was developed by RAE to assist the U.S. Environmental Protection Agency (EPA) in the development of generally applicable environmental standards for the land disposal of LLW. The PATHRAE code can be used to assess and compare the radiological risks of managing and disposing of LLW for a wide variety of land disposal alternatives ranging from sanitary landfill disposal to a deep geologic repository. The model is designed to assess the risks from disposal at sites with diverse hydrologic, climatic, and demographic characteristics.

The principal advantage of PATHRAE is its simplicity of operation and presentation while still allowing a comprehensive set of nuclides and pathways to be analyzed. PATHRAE can be installed and operated on IBM and IBM-compatible personal computers. Site performance for radioactive waste disposal can be readily investigated with relatively few parameters needed to define the problem. For example, key site parameters are found generally to include:

- Facility size and capacity.
- Facility operating time.
- Depth for emplacement of waste.
- Cover thickness and permeability.
- Precipitation.
- Soil retardation characteristics.

- Depth to the aquifer.
- Aquifer distance to accessible location.
- Aquifer velocity.

The PATHRAE model can be used to calculate maximum effective dose equivalents (doses) to workers during disposal operations, to off-site individuals after site closure, and to reclaimers and inadvertent intruders after site closure. Results include individual dose rates, organized both by radionuclide and as a function of time for each exposure pathway, as well as total dose rates with time.

2.2.2 Transport Pathways Modeled

The PATHRAE methodology models both off-site and on-site pathways through which persons may come in contact with contaminated waste. These pathways are shown schematically in Figure 2-2. The off-site pathways include groundwater transport to a surface river or a well, surface (wind or water) erosion, facility overflow, and atmospheric transport. The on-site pathways include direct gamma exposure, dust inhalation, food grown on the waste site, biointrusion, and radioactive gas inhalation. On-site pathways of concern arise principally from worker doses during operations and from post-closure site reclamation (intruder) activities such as constructing a house and living on-site, growing edible vegetation on-site, and drilling wells for irrigation or drinking water. Brief descriptions of each transport pathway that is shown in Figure 2-2 are given in the following paragraphs.

Groundwater Migration with Discharge to a River

This pathway starts with the mobilization of radioactive waste components leached from the waste by percolating precipitation. The waste components move downward through the unsaturated zone to an aquifer beneath the disposal site. In the aquifer the waste components are transported to an outcrop location where the aquifer discharges to a surface stream. The contaminated surface stream is used for irrigation, watering livestock, fishing, or domestic purposes.

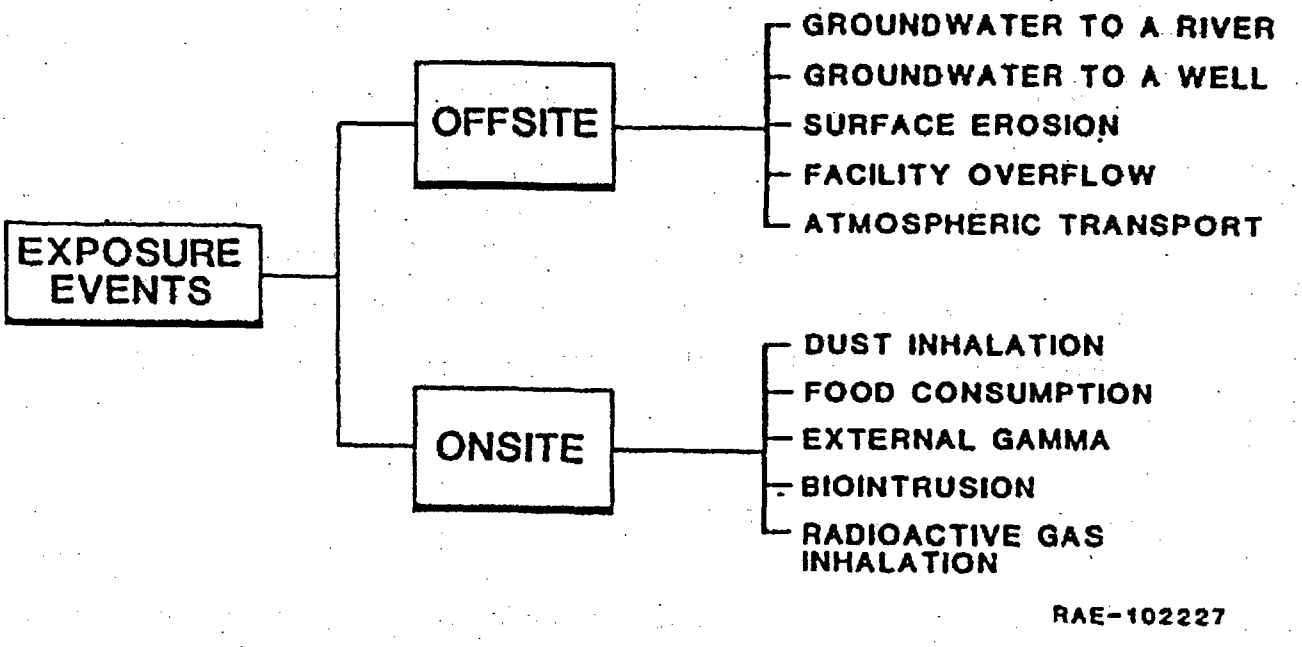

FIGURE 2-2. MAJOR EXPOSURE PATHWAYS FOR PATHRAE-EPA.

This transport pathway is not considered viable for the Clive site because of the very low rainfall and the absence of any perennial streams in the vicinity of the site. Consequently, doses resulting from this actuary were not modeled in this assessment.

Groundwater Migration with Discharge to a Well

Groundwater transport to a well is similar to the pathway described above except that the contaminated aquifer water is withdrawn from a well and used for irrigation, livestock, or domestic purposes.

Surface Erosion of Cover Material and Waste

Wind and/or water erosion results in the gradual removal of the cover over the waste and, eventually, the slow removal of the waste itself. The eroded waste is transported to a nearby surface stream where it contaminates the stream. A conservative assumption is made that the eroded waste components enter the surface stream in the same year they erode from the waste site.

Saturation of the Waste and Facility Overflow

Water accumulates in the disposal units and eventually overflows (the bathtub effect). The overflowing water, which is contaminated with radionuclides leached from the waste, subsequently enters a surface stream and contaminates it.

Atmospheric Transport

Either a trench fire or natural resuspension may be a source of airborne contaminated gas and particulate matter that is carried off-site by the prevailing wind. A Gaussian plume technique is used to trace the transport of this resuspended material to an off-site location where an individual is presumed to breath the contaminated dust.

Inhalation of Radioactive Dust On-Site

Radioactive dust might be resuspended during disposal operations or by reclaimers digging into the waste at the conclusion of the post-closure care period. This pathway traces the effects of the inhalation of contaminated dust by an on-site worker or by a reclaimer excavating a basement and/or a well after site closure.

Consumption of Food Grown on the Waste Site

This pathway traces the effects of eating food grown on reclaimed farm land and accounts for potential exposures of individuals to waste materials through the human foodchain. A basic assumption for exposure via this pathway is that reclamation activities are required to cause exposure to the waste materials. The reclaimer is assumed to disturb the waste by drilling a well and/or digging a basement for a house. The waste excavated by these activities is uniformly mixed with uncontaminated surface soil, and the soil mixture is used to grow edible crops and animal forage. Individuals are assumed to get some fraction of their food needs from contaminated crops, meat, and milk.

Biointrusion into the Waste

This pathway is similar to the food pathway described above, but involves the consumption of crops whose roots have penetrated into previously undisturbed subsurface waste materials. The crops are presumed to absorb waste materials through root uptake after which the crops are eaten by humans or used for animal forage. The difference between this pathway and the reclaimer farmer pathway is that no excavation of waste material by the reclaimer occurs.

Direct Gamma Exposure

This exposure pathway calculates the external radiation dose to an on-site worker or a reclaimer standing on the waste site. To estimate the dose to a reclaimer, the cover material over the waste is assumed to erode at a specified rate so that the shielding provided by the cover decreases with time. The source term also decreases with time due to

radioactive decay To calculate doses to individuals from this pathway the conservative assumption is made that no loss of contaminants to the groundwater pathway occurs due to leaching.

PATHRAE does not calculate the direct gamma dose to an off-site individual. The MICROSHIELD program was used in this assessment to evaluate the dose to an individual who was assumed to be located just beyond the site boundary, defined for these evaluations by the fenceline which is 100 ft from the edge of the disposal unit.

Radioactive Gas Inhalation

This pathway calculates the effects on a reclaimer of inhaling radon and radon daughters while inside a structure built over the waste.

2.2.3 Environmental Foodchain Analysis

Foodchain analyses performed by the PATHRAE model use the EPA methodology contained in the PRESTO-EPA codes. The foodchain calculations consider direct consumption of contaminated water, use of this water for animal consumption and irrigation of vegetation, consumption of contaminated vegetation by humans and animals, and human consumption of contaminated milk and meat from the animals. The foodchain calculations also consider vegetation grown directly in contaminated soil, with consumption of the vegetation by humans and animals, and subsequent human consumption of contaminated animal products. The foodchain calculations include transfer factors to vegetation and animals, as well as consumption rates for water, vegetation, meat, and milk.

For convenience, the routines performing the foodchain calculations calculate equivalent uptake factors for use in similar model runs, so that the foodchain analysis need not be repeated each time. The equivalent uptake factors quantify, using a single variable, the annual radionuclide uptake by an individual from all potential sources associated with that variable. For inhalation, the variable used to quantify uptake is just the breathing rate. For ingestion pathways involving contaminated water, the uptake factor is the total

equivalent quantity of drinking water, in liters/yr, that would have to be consumed by a person to give the same radionuclide uptake that occurs from consumption of contaminated vegetation, meat, milk, and seafood, as well as from the actual consumption of drinking water. For pathways involving the consumption of food grown on a waste site, the uptake factor is the equivalent amount of waste material (kg/yr) an individual would have to directly consume to ingest the same amount of a particular radionuclide that he or she ingests by eating food grown in the contaminated soil.

Since soil-to-plant transfer factors, and other related transfer factors used in calculating equivalent uptake factors are nuclide-dependent, the equivalent total uptake factors are nuclide-dependent.

2.2.4 Time Period for the Analyses

The health impacts to individuals from near-surface disposal of LLW are analyzed for a period of 1,000 years following the conclusion of disposal operations. The maximum annual dose to an off-site individual or a reclaimer, and the year in which this dose occurs are estimated. The maximally exposed off-site individual is assumed to be located close to the disposal site boundary (100 ft from the disposal unit edge). For the mobile radionuclides, maximum annual doses to this individual occur soon after site closure and almost always before 1,000 years.

2.2.5 Exposure Scenarios

For this assessment of the radiological risks from waste disposal at the Clive facility, potential exposures to on-site workers, off-site members of the general public, and post-closure site reclaimers are modeled. Reclaimers (inadvertent intruders) are persons who are assumed to enter the closed disposal site after institutional control has ended and to engage in activities which might disturb the waste and which result in radiological exposures to the intruders.

Three reclaimer scenarios - intruder-explorer, intruder-construction, and intruder agriculture -- were modeled for this assessment. In the intruder-explorer scenario, the reclaimer is assumed simply to wander about the site without disturbing the disposed waste. In the intruder-construction scenario, the reclaimer is assumed to excavate into the disposed waste material in order to construct a home on the site. In the intruder-agriculture scenario, the reclaimer is assumed to live in a residence constructed on the site, to grow crops onsite that provide the reclaimer with a portion of his annual food intake, and to consume meat and dairy products from animals raised on the site.

The exposure pathways by which on-site workers, off-site individuals, and reclaimers may be exposed to radiation are summarized in Table 2-1.

2.3 DOSE CRITERIA

This assessment of potential exposures to individuals from radioactive waste disposal at the Clive facility assumes unit concentrations of each of the pertinent radionuclides that are present in the waste. Emerging from these calculations are projections of doses (effective whole-body dose equivalent) to on-site and off-site individuals from waste containing the assumed unit concentrations. The unit-concentration dose results are then combined with applicable dose criteria to infer proposed concentration limits for the safe disposal of waste at the Clive facility. The quotients of the applicable dose criteria divided by the unit concentration doses provide scaling factors by which the unit concentrations can be multiplied to determine the maximum permissible concentrations of radionuclides in the waste.

As described in Chapter 3, the dose criteria adopted for this analysis include:

- 25 mrem/yr to any maximally exposed off-site individual.
- 100 mrem/yr for chronic exposure to a reclaimer after site closure (the intruder-agriculture scenario).
- 500 mrem for acute exposure to a reclaimer after site closure (the intruder-construction scenario).

TABLE 2-1

PATHWAYS FOR EXPOSURES TO INDIVIDUALS

Pathway	On-Site Worker	Off-Site Individual	Reclaimer Intruder-Explorer	Reclaimer (Intruder-Construction)	Reclaimer (Intruder-Agriculture)
On-Site					
Dust Inhalation	X			X	X
Food Consumption					X
Biointrusion					X
Direct Gamma Exposure	X		X	X	X
Radon Gas					X
Off-Site					
Groundwater to River		X			
Groundwater to Well		X			
Surface Erosion		X			
Facility Overflow		X			
Atmospheric Transport		X			

- 1,250 mrem/quarter to an on-site worker during disposal operations

These dose criteria provide the bases for the concentration limits for the low-activity wastes proposed for disposal at the Clive facility

3. REGULATORY ASSESSMENT

3.1 INTRODUCTION

In this chapter, regulatory requirements for the disposal of radioactive wastes are reviewed to identify requirements that may be applicable to the disposal of low-radioactivity wastes at a site near Clive, Utah. The purpose of this regulatory assessment is to identify applicable or relevant dose criteria and other requirements which might provide standards or guidance upon which to regulate the waste disposal operations. Wastes being considered for disposal include contaminated soil and structural materials with very low concentrations of radioactive constituents. These wastes might originate at both regulated and unregulated generator facilities. While these wastes might require disposal at a regulated facility, the large volumes and low specific activities have precluded their acceptance for disposal at currently licensed low-level radioactive waste (LLW) disposal facilities.

Regulations that apply to the disposal of chemically hazardous and mixed radioactive and hazardous waste are not reviewed in this assessment.

Disposal standards and requirements that could provide guidance for regulating waste disposal operations at the Clive facility include State of Utah regulations for NORM wastes currently accepted at the facility, Federal regulations for LLW and uranium mill tailings, and proposed standards for below-regulatory-concern (BRC) wastes. State of Utah regulations for the land disposal of radioactive waste are reviewed in Section 3.2. Federal regulations for the stabilization and disposal of mill tailings and wastes are reviewed in Section 3.3. Regulatory standards that were applied to the disposal of the Vitro tailings at the South Clive site are reviewed in Section 3.4. Proposed criteria for BRC waste disposal are reviewed in Section 3.5. Regulatory standards and guidance which might be applicable to waste disposal operations at the Clive facility are discussed in Section 3.6.

3.2 UTAH REGULATIONS FOR LAND DISPOSAL OF RADIOACTIVE WASTES

The disposal of commercially generated LLW is regulated by the U.S. Nuclear Regulatory Commission (NRC) or by Agreement States authorized by the NRC to regulate such disposal. By agreement with the NRC, Utah is responsible for regulating certain activities within the state involving the possession and use of radioactive byproduct, source, and special nuclear material. The responsible regulatory agency is the Utah Department of Health, Bureau of Radiation Control (UDH/BRC).

Utah has applied to the NRC for permission to assume additional regulatory authority over the disposal of radioactive materials. As proposed, this additional authority would include the responsibility to regulate the land disposal of radioactive byproduct, source, and special nuclear materials in quantities not sufficient to form a critical mass. The NRC would retain regulatory authority over uranium and thorium mills and over the disposal of 11e.(2) byproduct material (uranium and thorium mill tailings and wastes).

The State of Utah regulates the disposal of naturally occurring radioactive materials (NORM). The NRC does not exercise regulatory authority over NORM wastes. Typical radionuclides in NORM products and wastes include uranium-238 (U-238), thorium-232 (Th-232), and radium-226 (Ra-226).

Utah licensing requirements for land disposal of radioactive waste are contained in Chapter R447-25 of Utah Radiation Control Rules.[3] The Utah requirements are modeled after and closely parallel comparable regulations in the NRC's licensing requirements for land disposal of LLW in 10 CFR 61.[4] The requirements in Chapter R447-25 include requirements on the content of a license application, financial responsibility, facility performance objectives, site suitability, site design, facility operations, site closure, transfer of license, post-closure institutional control, termination of license, environmental monitoring, and records and reports. In this section, those paragraphs of the Utah regulations pertaining to performance objectives, site suitability, site design, facility operations, site closure, post-closure institutional control, and environmental monitoring are reviewed for their applicability to the safe disposal at the Clive site of wastes with very low concentrations of radioactive constituents.

The licensing requirements for land disposal of radioactive waste for both the State of Utah and the NRC define low-level radioactive waste as having the same meaning as in the Low-Level Radioactive Waste Policy Act, that is, radioactive waste not classified as high-level radioactive waste, transuranic waste, spent nuclear fuel, or byproduct material as defined in Section 11e.(2) of the Atomic Energy Act (uranium or thorium tailings and waste).

3.2.1 Disposal Facility Performance Objectives

Applicants for a disposal facility license for radioactive wastes must provide reasonable assurance that the facility will be sited, designed, operated, closed, and controlled after closure so that the performance objectives of Sections R447-25-19 through R447-25-22 will be met. These performance objectives address protection of the general population, protection of inadvertent intruders, protection of individuals during operations, and disposal site stability after closure.

Protection of the General Population - Concentrations of radioactive material which may be released to the general environment in groundwater, surface water, air, soil, plants or animals shall not result in an annual dose exceeding an equivalent of 25 millirems (0.25 mSv) to the whole body, 75 millirems (0.75 mSv) to the thyroid, and 25 millirems (0.25 mSv) to any other organ of any member of the public. Reasonable effort should be made to maintain releases of radioactivity in effluents to the general environment as low as is reasonably achievable.

Protection of Inadvertent Intruders - Design, operation, and closure of the land disposal facility shall ensure protection of any individual inadvertently intruding into the disposal site and occupying the site or contacting the waste at any time after active institutional controls over the disposal site are removed.

Neither the State of Utah intruder protection performance objective nor the NRC's intruder protection standard in 10 CFR 61.42 specifies an intruder dose limit. However, the NRC has indicated[4] that a 500 mrem acute whole body dose to an intruder was the basis for the waste classification limits for long-lived radionuclides in Table 1 of 10 CFR 61.

The intruder protection performance objective for low-level radioactive waste disposal at U.S. Department of Energy (DOE) and DOE-contractor facilities[5] provides that:

> "the committed effective dose equivalent received by individuals who inadvertently may intrude into the facility after the loss of active institutional control will not exceed 100 mrem/yr for continuous exposure or 500 mrem for a single acute exposure."

Protection of Individuals During Operations - Disposal facility operations shall be conducted in compliance with the standards of radiation protection in Chapter R447-15 of Utah Radiation Control Rules, except for release of radioactivity in effluents from the facility which shall be governed by R447-25-19 (performance objective for protection of the general population). Every reasonable effort should be made to maintain radiation exposures as low as is reasonably achievable.

Chapter R447-15 prescribes radiation dose standards for persons who work in restricted areas (such as workers at a regulated waste disposal facility). The occupational dose standards in Chapter R447-15 are the same as the NRC's standards in 10 CFR 20.101, and include a worker whole body dose limit of 1,250 mrem per calendar quarter (equivalent to 1,250 mrem/quarter).

Disposal Site Stability After Closure - The disposal facility shall be sited, designed, used, operated, and closed to achieve long-term stability of the disposal site and to eliminate, to the extent practicable, the need for ongoing active maintenance of the site following closure, so that only surveillance, monitoring, or minor custodial care are required.

3.2.2 Disposal Site Suitability Requirements

Disposal site suitability requirements, prescribed in Section R447-25-23, include the following:

- The disposal site shall be capable of being characterized, modeled, analyzed, and monitored.

- Locations where future population growth or industrial or commercial developments might affect the ability of the facility to meet performance objectives should be avoided.

- Locations with known natural resources which, if exploited, might result in failure of the facility to meet performance objectives shall be avoided.

- The disposal site shall be generally well drained and free of areas of flooding or frequent ponding.

- Upstream drainage areas shall be minimized.

- The depth to the water table shall be such that groundwater will not intrude into the waste.

- The hydrogeologic unit used for disposal shall not discharge groundwater to the surface within the disposal site.

- Locations where tectonic processes may adversely affect the ability of the facility to meet performance objectives shall be avoided.

- Locations where surface geologic processes may adversely affect the ability of the facility to meet performance objectives shall be avoided.

- Locations where nearby facilities or activities could adversely affect the ability of the facility to meet performance objectives shall be avoided.

3.2.3 Disposal Facility Design Requirements

Disposal facility design requirements, prescribed in Section R447-25-24 include the following:

- Design features shall be directed toward long-term isolation of the waste and avoidance of the need for post-closure active maintenance.

- Disposal site design shall be compatible with the site closure plan and provide assurance of meeting the performance objectives after site closure.

- Disposal site design shall facilitate, where appropriate, the ability of the site's natural characteristics to meet the performance objectives.

- Covers shall be designed to minimize water infiltration, to direct water away from the waste, and to resist degradation.

- Surface features shall direct surface water away from the disposal units.

- Site design shall minimize the contact of standing or percolating water with waste during storage, disposal, or after disposal.

3.2.4 Disposal Facility Operating Requirements

Disposal facility operating requirements, prescribed in Section R447-25-25 include the following:

- Class A wastes shall be placed in disposal units that segregate them from other wastes unless the Class A wastes meet the stability requirements of Class B and C wastes.
- Class C wastes shall be disposed of with a minimum of 5-m of cover or with barriers designed to protect against inadvertent intrusion for at least 500 years.
- Only waste classified as Class A, B, or C shall be acceptable for near-surface disposal.
- Wastes shall be emplaced to maintain package integrity during disposal, to minimize void spaces, and to permit void spaces to be filled.
- Void spaces between waste packages shall be filled with earth or other material.
- The boundaries and locations of disposal units shall be accurately located and mapped and the units shall be marked for ease of identification.
- A buffer zone shall be maintained between the disposed waste and the disposal site boundary and beneath the disposed waste.
- Closure and stabilization measures set forth in the site closure plan shall be carried out as each disposal unit is filled and covered.
- Active waste disposal operations shall not have an adverse affect on completed closure and stabilization measures.
- Only wastes containing or contaminated with radioactive material shall be disposed of.

3.2.5 Closure and Post-Closure Requirements

Closure and post-closure requirements for a land disposal facility are addressed in several sections of Chapter R447-25. When disposal operations are completed, site closure shall be accomplished in accordance with the provisions of an approved site closure plan. The disposal facility shall be closed in a manner to achieve long-term stability of the site and eliminate, to the extent practicable, the need for ongoing active maintenance.

The licensee shall continue to monitor the site and perform necessary maintenance and repairs until site closure is complete and for a post-closure period until the license is terminated or transferred to a state-approved custodial agency. The length of the post-closure control period shall be determined by the Bureau of Radiation Control. Under the terms of the current license for the Clive site, the operator of the site will continue monitoring and maintenance activities for 30 years after closure.

3.2.6 Environmental Monitoring

The requirements for environmental monitoring of a land disposal facility are outlined in Section R447-25-26. Environmental monitoring shall be conducted prior to the start of construction of the facility, during site construction and operation, and after the disposal site is closed.

The pre-operational monitoring program shall provide basic background environmental data for comparison with operational monitoring results. For site characteristics that are subject to seasonal variation, data must cover at least a 12-month period.

During facility construction and operation, monitoring must provide data to evaluate potential health and environmental impacts and to enable the evaluation of long-term trends and the need for mitigative measures. The monitoring system must be capable of providing early warning of releases of radionuclides before they leave the site boundary.

Post-operational monitoring shall be conducted based on the operating history and the closure and stabilization of the site. This monitoring must also be capable of evaluating trends and of providing early warning of the migration of radionuclides away from the disposal units.

3.3 REGULATION OF MILL TAILINGS AND WASTES

Under the provisions of the Uranium Mill Tailings Radiation Control Act of 1978 (UMTRCA), as amended, the NRC has the responsibility for licensing sites for the disposal of tailings and wastes produced by uranium and thorium milling operations. The U.S. Environmental Protection Agency has the responsibility for promulgating radiological and non-radiological standards for these wastes. The State of Utah has not petitioned the NRC for authority over the tailings produced by uranium and thorium milling operations and is not authorized to regulate these wastes.

NRC criteria for the disposition of tailings and wastes are promulgated in Appendix A of Title 10, Part 40 of the Code of Federal Regulations (10 CFR 40, Appendix A).[6] The EPA's health and environmental standards for tailings and wastes are promulgated in 40 CFR 192.[7] The NRC requirements in 10 CFR 40, Appendix A, incorporate EPA standards for limits on radon emission, the longevity of cover materials, and protection of groundwater quality.

3.3.1 EPA Standards

Standards for Control of Residual Radioactive Material

EPA's standards for managing disposal sites for uranium and thorium mill tailings and wastes include a radon flux standard and a longevity requirement for the cover placed over the disposed waste. Cover materials shall limit atmospheric releases of radon-222 from

uranium tailings and wastes and atmospheric releases of radon-220 from thorium tailings and wastes to an average release rate of 20 picocuries per square meter per second (20 pCi/m²s). Covers over disposal areas shall be designed and constructed to be effective for 1,000 years, to the extent reasonably achievable, and, in any case, for at least 200 years.

These cover material requirements do not apply to a disposal site which contains radium concentrations in land, averaged over areas of 100 m² (1,075 ft²), that do not exceed the background level by more than:

(i) 5 picocuries per gram (5 pCi/g) averaged over the first 15 cm (6 in.) below the surface, and

(ii) 15 pCi/g averaged over 15 cm (6 in.) thick layers more than 15 cm below the surface.

Groundwater Protection Standards

The EPA's groundwater protection standards for mill tailings disposal are set forth in Subparts D and E of 40 CFR 192. Facilities for tailings disposal must conform to the requirements of 40 CFR 264.221[8] which provide that new surface impoundments be designed and constructed with a double liner and leachate collection system that prevents any migration of wastes out of the impoundment to the adjacent subsurface soil, groundwater, or surface water at any time during the active life (including the closure period) of the impoundments. Exemption from the double liner/leachate collection system requirement may be granted if it can be demonstrated that an alternate design, together with operating practices and site characteristics, will prevent the migration of any hazardous constituents into the groundwater or surface water at least as effectively as the double liner/leachate collection system.

Uranium and thorium tailings and wastes must be managed to conform to the groundwater protection standard of 40 CFR 264.92. This standard specifies that hazardous constituents entering the groundwater must not exceed the concentration limits specified in 40 CFR 264.94 in the uppermost aquifer underlying the waste management area beyond the point of compliance during the compliance period specified by the EPA Regional

Administrator. The radioactivity limits shown in Table 3-1 are added to the concentration limits for hazardous constituents in groundwater, specified in 40 CFR 264.94.

3.3.2 NRC Standards

NRC license requirements for the possession and use of uranium, thorium, ores containing uranium and thorium, and tailings and wastes from uranium and thorium milling operations are contained in 10 CFR 40. Appendix A of 10 CFR 40 establishes technical, financial, material ownership, long-term site surveillance, and hazardous constituents criteria for the disposition of tailings and wastes produced by mill operations. The eight technical criteria and the long-term site surveillance criterion of Appendix A are summarized in this section.

Criterion 1 - In selecting a disposal site the primary emphasis is the long-term isolation of wastes by minimizing disturbance and dispersal by natural forces. Site features that must be considered include:

- Remoteness from populated areas.
- Hydrologic and other natural conditions that contribute to isolation of contaminants from groundwater sources.
- Potential for minimizing erosion, disturbance, and dispersion by natural forces over the long term.

Tailings should be disposed of so that active maintenance is not required to preserve the conditions of the site.

Criterion 2 - Whenever practicable, wastes from small extraction operations should be disposed of at large mill tailings disposal sites to avoid proliferation of small waste disposal sites and to reduce perpetual surveillance obligations.

Criterion 3 - The "prime option" for the disposal of tailings is placement below grade. Where conditions make below-grade disposal impractical, it must be demonstrated that

TABLE 3-1

GROUNDWATER PROTECTION LIMITS FOR RADIOACTIVITY[a]

Radioactive Material	Concentration Limit (pCi/liter)
Combined radium-226 and radium-228	5
Gross alpha-particle activity (excluding radon and uranium)	15

(a) Source: 40 CFR 192 32.

above-grade disposal will provide reasonably equivalent isolation of tailings from natural erosional forces.

Criterion 4 - Site and design criteria that minimize flooding, reduce wind and water erosion, provide protection from geologic processes, and enhance cover thickness must be adhered to.

Criterion 5 - EPA's basic groundwater protection standards in 40 CFR 192, Subparts D and E must be adhered to (see Section 3.3.1). These groundwater protection standards limit the concentrations of hazardous constituents and residual radioactivity in the uppermost aquifer hydraulically downgradient from the disposal unit. An aquifer is defined by the NRC as a geologic formation, group of formations, or part of a formation capable of yielding a significant amount of groundwater to wells or springs. The uppermost aquifer means the geologic formation nearest the natural ground surface that is an aquifer, as well as lower aquifers that are hydraulically connected with this aquifer within the boundary of the site.

Maximum concentration values of radioactive constituents in groundwater are 5 picocuries per liter for radium (combined radium-226 and radium-228) and 15 picocuries per liter for gross alpha activity (excluding radon and uranium or radon and thorium depending on the process that originates the tailings).

Criterion 6 - Tailings and wastes shall be covered with a layer of earthen material that provides reasonable assurance of the control of radiological hazards for 1,000 years, to the extent reasonably achievable, and, in any case, for at least 200 years. The cover must limit releases of radon-222 from uranium wastes and of radon-220 from thorium wastes to an average release rate of 20 picocuries per square meter per second (20 pCi/m^2-s) throughout the effective design life.

These cover requirements apply unless the radium concentration at the disposal site, averaged over areas of 100 m^2 (1,075 ft^2), does not exceed background by more than 5 pCi/g averaged over the first 15 cm (6 in.) below the surface and 15 pCi/g averaged over 15-cm (6-in.) thick layers more than 15 cm (6 in.) below the surface.

Criterion 7 - A preoperational monitoring program must be conducted to provide baseline environmental data for future reference. An operational monitoring program must be conducted to evaluate compliance with applicable standards and regulations and to detect potential long-term effects.

Criterion 8 - Operations must be conducted so that airborne effluent releases are reduced to levels as low as is reasonably achievable.

Criterion 12 (Long-Term Surveillance) - The final disposition of mill tailings and wastes should be such that on-going active maintenance is not required to preserve isolation. Site inspections must be conducted at least annually by the government agency retaining ultimate custody of the site.

3.4 DISPOSAL STANDARDS FOR THE VITRO TAILINGS

In accordance with the provisions of the Uranium Mill Tailings Radiation Control Act of 1978 (UMTRCA),[9] the former Vitro Chemical Company site at South Salt Lake, Salt Lake County, Utah was decontaminated during the period beginning in February 1984 and extending through December 1988. Uranium mill tailings and other contaminated material stored at the Vitro site were transported to a site at South Clive, Tooele County, Utah where they were disposed and stabilized.[10] Approximately 2.1 million cubic meters (2.8×10^6 yd^3) of mill tailings, rubble, sewage sludge, and other mill wastes with an average density of about 1.6 g/cm^3 (100 lb/ft^3) were removed to the South Clive site. The average radionuclide concentrations in this waste were about 40 pCi/g for U-238, 560 pCi/g for Th-230, and 560 pCi/g for Ra-226.

The tailings are stabilized partially below grade on a 40.5 hectare (100-acre) site owned by the Federal government and licensed by the NRC. The cover over the contaminated material is constructed of two layers: a lower 2.1 m (7-ft) thick compacted earthen layer to act as a radon and water infiltration barrier and an upper 0.6-m (2-ft) thick rock layer for erosion protection. Calculations made using the RAECO model[11] showed that

the seven feet of soil cover over the pile would reduce radon emissions to less than 20 pCi m²-sec.

The design requirements for Vitro tailings disposal at the South Clive site are based on the EPA's 1983 environmental protection standards for remedial actions at inactive uranium processing sites.[12] These standards were in effect at the time remedial action was planned and approved and they provided a basis for subsequent actions taken to stabilize the material removed from the Vitro site. The 1983 EPA standards establish requirements for long-term stability and radiation protection and provide procedures for ensuring the protection of groundwater quality. The 1983 standards include the following:

1. Control shall be designed to be effective for up to 1,000 years, to the extent reasonably achievable, and, in any case, for at least 200 years.

2. Cover shall provide reasonable assurances that releases of radon-222 from residual radioactive material to the atmosphere will not:

   a. Exceed an average release rate of 20 pCi/m² - sec, and

   b. Increase the annual average concentration of radon-222 in air at or above any location outside the disposal site by more than 0.5 pCi/l.

3. Reasonable effort shall be made to achieve an annual average radon decay product concentration (including background) not to exceed 0.02 WL. In any case, the radon decay product concentration (including background) shall not exceed 0.03 WL.

In establishing the radon standard, EPA determined that the emission limitation could be achieved by well-designed thick earthen covers and that such control techniques would be compatible with those required to meet the longevity standard.

Rather than establish specific numerical water quality standards and prescriptive requirements for a liner beneath the disposed waste (as in the current EPA standards) the 1983 EPA requirements specify that protection of water should be considered on a case-specific basis. The 1983 criteria require site-specific analyses of potential future contaminant discharge and case-by-case evaluation of the significance of such discharge. The implementation guidelines for these EPA standards call for adequate hydrologic and

geochemical surveys at each tailings disposal site to determine whether specific water protection measures should be applied.

The longevity and radon flux requirements in the 1983 EPA standards are the same as those requirements in the current (i.e., 1988) standards. The EPA has concluded that a radon emission standard of 20 pCi/m^2-sec provides approximately the same overall health protection as is provided by an air concentration standard of 0.5 pCi/l at the edge of the tailings pile. Therefore, the air concentration standard has been deleted from the current EPA standards for the stabilization of mill tailings. It should be noted that no person currently lives within approximately 24 km (15 mi) of the Clive site, so radon exposures to a person living at the site boundary would involve a hypothetical individual.

The current (1988) EPA water quality standards are much more prescriptive than the 1983 standards. The 1983 standards provide only that appropriate actions to protect the groundwater be determined on a site-specific basis. The current (1988) standards include concentration limits for radium and for gross alpha emitters in groundwater and prescribe a double liner/leachate collection system or equivalent protection for the tailings pile. However, as discussed in Section 3.3.1, exemption from the liner/leachate collection system may be granted if the site operator demonstrates that a combination of facility design, operating practices, and site characteristics will provide equivalent protection of the groundwater. The Vitro tailings disposal facility at South Clive does not include a liner under the disposed waste.

3.5 PROPOSED BRC STANDARDS

3.5.1 Definition of BRC Waste

Virtually all materials are radioactive, either because they contain natural radioactivity or because of contamination with artificial radioactivity. For many of these materials regulatory control is neither possible nor practical. Examples of radiation sources

for which control is not feasible include natural soil and rocks (which incorporate small concentrations of uranium and thorium and their daughter products), buildings constructed from brick, concrete, or stone, and the human body (which contains minute amounts of naturally occurring radioactive potassium-40). There are also radiation sources and practices involving radiation exposure for which control is possible but which present such small risks to public health and safety that they may not warrant the standard regulatory licensing and compliance procedures.

Much of the waste disposed of at regulated facilities has very low concentrations of radionuclides. In some cases the waste is only suspected of radioactive contamination because it originates in locations where operations involve known radioactive materials. Suspect waste and waste that contains very low concentrations of radionuclides may be candidates for exemption from regulatory control as radioactive waste. As defined in an NRC policy statement,[13] below regulatory concern (BRC) waste is sufficiently low in concentrations or quantities of radionuclides for the NRC to find that it may be disposed of by alternative means (i.e., at other than a licensed low-level waste disposal facility) without posing undue risk to public health and safety.

3.5.2 Criteria for Designation of Waste as BRC

In the Low-Level Radioactive Waste Policy Amendments Act of 1985[14] Congress mandated the NRC to establish procedures for acting expeditiously on petitions to exempt specific waste types from NRC regulations. Implicit in this mandate is a requirement to specify criteria that can be used to determine if a waste type is BRC. In response, the NRC published in the Federal Register, August 29, 1986[13] a policy statement and implementation plan for handling petitions to exempt specific radioactive waste streams from disposal in licensed low-level waste disposal facilities.

The NRC's policy statement includes 14 decision criteria to be used in evaluating whether to grant BRC status for a particular waste stream. Four of these decision criteria address the radiological impacts of BRC status. These four criteria are:

- Disposal and treatment of the wastes as specified in the petition for BRC status will result in no significant impact on the quality of the human environment.

- The maximum expected effective dose equivalent to an individual member of the public does not exceed a few millirem per year for normal operations and anticipated events.

- The collective doses to the critical population and the general population are small.

- The potential radiological consequences of accidents or equipment malfunction involving the wastes and intrusion into disposal sites after loss of normal institutional controls are not significant.

Even though waste designated as BRC could be disposed of at facilities that are not subject to low-level radioactive waste licensing requirements, the waste itself would still be subject to certain regulatory requirements. Criterion No. 11 of the NRC's fourteen decision criteria requires that licensees who dispose of waste as BRC establish effective, licensable, and inspectable programs for the waste prior to transfer to demonstrate compliance with requirements for BRC designation. Records relating to BRC designation and disposal would be subject to audit and inspection by the NRC or an Agreement State and by any local government agency that grants a license or permit to a facility where the waste is disposed.

3.5.3 Proposed BRC Dose Criteria

The major consideration in defining criteria for candidate BRC waste disposal is to establish dose limits that may be of negligible concern in terms of potential health effects. All persons are continuously exposed to radiation from various natural sources such as cosmic rays, radioactivity in rocks and minerals in the earth's crust, and natural radioactivity in the bones and tissues of the human body. Background radiation doses in the United States are typically in the range of 100 to 120 mrem/yr, exclusive of the lung dose from radon. (Because of elevation and close proximity to mountains, background doses from natural sources to persons living in Utah may, depending on location, be twice the U.S. average.) Medical and dental sources of diagnostic and therapeutic radiation and the radioactivity in common household and personal appliances may add 50 to 80 mrem/yr to the background radiation dose received by the average adult. To be of negligible concern, potential doses to individuals

from BRC waste treatment and disposal should probably be a fraction of the background radiation dose and acceptable in terms of incremental risks to the public.

Government regulatory agencies in the United States and in other countries and international commissions concerned with the regulation of radionuclides have considered how dose criteria should be applied for BRC designation.

ICRP Publication 46[15] addresses the question of a dose limit for BRC waste as follows:

> "In individual-related assessments, it is widely recognized that there are radiation doses that are so small that they involve risks that would be regarded as negligible by the exposed individuals. Studies of comparative risks experienced by the population in various activities appear to indicate that an annual probability of death of the order of 10^{-6} per year or less is not taken into account by individuals in their decisions as to actions that could influence their risks. Using rounded dose response factors for induced health effects, this level of risk corresponds to an annual dose of the order of 0.1 mSv (10 millirem)."

ICRP 46 points out that an individual may be exposed from several different radiation sources or practices involving radionuclides. To maintain the incremental dose from all sources or practices below a prescribed dose limit, the dose associated with each source or practice would have to be maintained at some fraction of this total dose limit.

Both the NRC and the EPA have indicated that the individual dose limit for BRC waste should be a few millirem per year. The NRC is preparing a policy statement on exemptions from regulatory control[16] that will include specific dose limits for classifying waste as BRC. The policy statement is currently being revised by NRC staff. As presently proposed, the statement provides both individual and population dose criteria. The criteria are:

- An average individual dose to typical individuals in the critical group to be less than 10 mrem/yr for individual practices.
- Collective doses resulting from exposure to a practice are to be as low as reasonably achievable (ALARA). Annual collective doses less than or equal to 1,000 person-rem will be deemed to satisfy the ALARA criterion. The calculation of collective dose does not need to consider individual doses less than or equal to 0.1 mrem/yr.

The EPA is developing dose criteria for identifying waste that may be below regulatory concern as part of that agency's development of general environmental standards for low-level radioactive waste disposal. In a version of 40 CFR 193 that is yet to be issued in draft form, the EPA is proposing a 4 mrem/yr individual dose limit for BRC designation.[17] This dose limit would correspond to the EPA's 4 mrem/yr drinking water standard. A draft of 40 CFR 193 may be issued for public comment in the Federal Register in the spring of 1990.

3.5.4 Efforts to Develop BRC Standards

The State of Texas has recently amended its LLW regulations to authorize the use of permitted sanitary landfills for the disposal of wastes containing only low concentrations of short-lived radionuclides.[18] Under certain conditions that include limits on radionuclide concentrations and on the total curies disposed annually, wastes containing only radionuclides with half-lives less than 300 days may be disposed in landfills not regulated for LLW disposal. Concentration and annual curie limits were determined based on a dose guideline of 1 mrem/yr to the maximum exposed individual. The revised Texas statutes, which apply to the disposal of 56 short-lived radionuclides, greatly benefit hospitals, universities, and industries in Texas, because about half of the radioactive wastes from these organizations contain only short-lived radionuclides.

In accordance with the provisions of the NRC's August 1986 policy statement, discussed in Section 3.5.2, the nuclear power industry is preparing a petition for BRC disposal of some reactor-generated wastes with very low levels of radioactivity.[19] Several reactor-generated waste types, including dry active waste, waste oil, contaminated soil, and sand blast grit are being proposed as candidates for BRC status. All of the waste types for which NRC approval is being requested would be subject to specific restrictions regarding radionuclide concentrations and quantities of waste shipped from an individual generator to a disposal facility. NRC-approved compliance procedures would be established and records kept that would be subject to audit by the NRC.

3.6 PROPOSED STANDARDS FOR THE CLIVE DISPOSAL FACILITY

This section provides a summary of dose criteria used in establishing radionuclide concentration limits for the waste disposal facility near Clive, Utah. This section also provides a summary of standards or guidance which may be applicable or relevant to the regulation of this facility. In addition to NORM wastes currently disposed of at the Clive site, additional wastes proposed for disposal include contaminated soil, contaminated structural materials, and surface-contaminated equipment with very low concentrations of radioactive constituents. The site is adjacent to that used for the disposal of tailings and wastes that were relocated from the former Vitro Chemical Company site in South Salt Lake. The dose criteria used to establish concentration limits and other standards are based on a review of standards and guidance for the disposal of LLW, NORM wastes, mill tailings, and BRC wastes summarized in the preceding sections of this chapter. The rationale for the dose criteria and details of proposed regulatory requirements for the Clive facility are given in the following paragraphs.

3.6.1 Dose Criteria

The objective of this study is to define limiting radionuclide concentrations for the safe disposal of wastes at the Clive disposal facility. These limiting concentrations are based on dose criteria (in terms of effective whole-body dose equivalent) for the protection of on-site workers and the general public. The dose criteria adopted for this analysis are:

- 25 mrem/yr to any maximally exposed off-site individual.
- 100 mrem/yr for chronic exposure to a reclaimer after site closure (the intruder-agriculture scenario).
- 500 mrem for acute exposure to a reclaimer after site closure (the intruder-construction scenario).
- 1,250 mrem/quarter to an onsite worker during disposal operations.

Table 3-2 provides a comparison of the dose criteria used for this analysis, and the associated health risks (excess fatal cancers), with dose criteria and health risks for other waste disposal facilities.

The dose criterion for exposure to any member of the general public used in estimating limiting radionuclide concentrations in wastes proposed for disposal at the Clive facility is 25 mrem/yr. This is the same as the annual dose limit for individual members of the general public specified in 10 CFR 61 and in State of Utah licensing requirements for the land disposal of radioactive waste.

The 25 mrem/yr dose criterion is equivalent to an estimated risk (excess fatal cancers) of 7.0×10^{-6} health effects per year (HE/yr) to the maximum exposed individual. This estimated risk is about a factor of 7 lower than the estimated risk associated with the EPA radon flux standard for mill tailings disposal which applies to the Vitro tailings disposed at the South Clive site. Because the Clive site is far removed from populated areas (the nearest residence is about 15 miles distant) and from current areas of commercial and industrial development, it is very unlikely that any member of the general public would be exposed at the rate specified by the assumed dose limit. Although there probably will be additional residential and industrial developments in Tooele County, it is considered unlikely that such developments will occur close enough to the Clive site to result in significant exposures to individual members of the general public. The area where the Clive site is located has recently been designated as a hazardous waste industrial zone by Tooele County.

The intruder dose criteria used to estimate limiting radionuclide concentrations in wastes proposed for disposal at the Clive facility are 100 mrem/yr for chronic exposure (the intruder-agriculture scenario) and 500 mrem for acute exposure (the intruder-construction scenario). Neither the State of Utah nor the NRC regulations for the land disposal of radioactive wastes specify numerical dose limits for intruder protection. However, an acute exposure dose of 500 mrem was used by the NRC as the basis for the waste classification criteria for long-lived radionuclides in Table 1 of 10 CFR 61. The 100 mrem/yr chronic exposure limit and the 500 mrem acute exposure limit are specified in DOE's performance objective for intruder protection in Chapter III of DOE Order 5820.2A.[20]

TABLE 3-2

COMPARISON OF WASTE DISPOSAL REQUIREMENTS AND RISKS

Parameter	NRC-Licensed Commercial LLW Facility[a,d]			Mill Tailings	BRC Waste	Clive Disposal Facility				
	General Public	Intruder	On-Site Worker			General Public	Intruder-Explorer	Intruder-Agriculture	Intruder-Construction	On-Site Worker
Dose Criterion	25 mrem/yr	500 mrem	5,000 mrem/yr	Radon Flux Limit[b]	1 to 10 mrem/yr	25 mrem/yr	25 mrem/yr	100 mrem/yr	500 mrem	1 250 mrem/yr
Risk (HE/yr)[c]	7.0×10^{-6}	1.4×10^{-4}	1.4×10^{-3}	4.6×10^{-6}[d]	2.8×10^{-7} to 2.8×10^{-6}	7.0×10^{-6}	7.0×10^{-6}	2.8×10^{-5}	1.4×10^{-4}	1.4×10^{-3}
Generator Requirements	Regulated			Regulated	Regulated[e]	May or May Not be Regulated				
Disposal Facility Requirements	Regulated			Regulated	Not Regulated	Regulated				

a) Doses limited by 10 CFR 20 and 10 CFR 61
b) The radon flux limit is 20 pCi/m²-sec which is assumed to provide the same health protection as an air concentration standard of 0.5 pCi/l at the edge of the tailings pile
c) Conversion from dose to risk is based on a risk conversion factor of 2.8×10^{-7} health effects (fatal cancers) per millirem of effective dose equivalent (Reference 19)
d) Based on a radon concentration level of 0.5 pCi/l at the site boundary and a risk conversion factor of 360 fatal lung cancers per 10^6 WLM (Reference 20)
e) The waste generator is required to implement compliance procedures and maintain auditable records demonstrating that the waste meets prescribed radionuclide concentration and total curie limits

The worker dose criterion used to estimate limiting radionuclide concentrations in wastes proposed for disposal at the Clive facility is 1,250 mrem/quarter. This is consistent with both State of Utah (R447-15) and NRC (10 CFR 20.101) radiation protection standards for radiation zone workers.

3.6.2 Regulatory Standards

The applicability of State of Utah waste disposal licensing requirements and of NRC and EPA mill tailings disposal standards to the safe disposal of wastes with very low concentrations of radionuclides at a site near Clive, Utah is summarized in Table 3-3. The regulations and standards are classified as belonging in one of the following categories:

Applicable - Must be followed in any decision to permit disposal.

Relevant - Related to the decision process and/or should be followed to the extent practicable.

Appropriate - Useful for guidance and may be considered in the decision process.

A brief justification for each classification decision is given in the table.

The physical characteristics of the Clive site should be an important consideration in any decision about the applicability of licensing requirements. This is especially true with respect to requirements designed to limit the migration of radionuclides via water pathways. The South Clive facility is in an arid region where the pan evaporation rate greatly exceeds the annual rainfall. There are no perennial surface water systems associated with the site. Runoff from the hills to the east percolates into the ground before reaching the South Clive area. The site overlies briny groundwater downgradient of the recharge to any usable groundwater in the alluvial fan aquifer. The shallow groundwater (6 to 9 m or 20 to 30 feet below the surface) is characterized by high total dissolved solids and certain naturally-occurring radionuclides that make it unfit for human consumption.

TABLE 3-3

CLASSIFICATION SUMMARY FOR WASTE DISPOSAL REGULATIONS

Requirement	Applicability	Rationale
State of Utah Requirements for LLW Disposal		
Performance Objectives	Applicable	Provide standards for the safety of the public and the environment. General population dose criterion modified as described in Section 3.6.1.
Site Suitability Requirements	Applicable	Clive site's natural features appear to meet the prescribed site suitability requirements.
Facility Design Requirements	Applicable	Design must provide for isolation of the waste from man and his environment. Clive site's natural features facilitate isolation of the waste.
Facility Operating Requirements	Applicable	Regulations pertaining to filling void spaces, disposal unit identification, and facility stabilization and closure are applicable to Clive. Since only low-activity wastes will be disposed at Clive, regulations relating to the segregation of low-activity and high-activity wastes and stability requirements for high-activity wastes do not apply.
Closure and Post-Closure Requirements	Applicable	Closure/post-closure activities must be conducted to ensure long-term stability of the site and isolation of the waste.
Environmental Monitoring	Applicable	Environmental monitoring must provide necessary data to evaluate trends and provide early warning of radionuclide releases.
NRC Standards for Mill Tailings Disposal	Relevant	Should be considered in licensing decision if wastes with concentrations of uranium, thorium, and radium comparable to mill tailings wastes are disposed at Clive site.
EPA Standards		
Cover Requirements	Relevant	Should be considered in licensing decision if wastes with concentrations of uranium, thorium, and radium comparable to mill tailings wastes are disposed at Clive site.
Groundwater Protection	Appropriate	Clive site characteristics should be evaluated to determine if the site characteristics provide adequate protection of groundwater. Experience with Vitro tailings could be a factor in the decision process. The Vitro tailings disposal facility does not include a liner because one was not required by the 1983 EPA standards.

4. DISPOSAL SYSTEM CHARACTERISTICS

The information and assumptions used to describe conditions at the Clive disposal facility and to perform the risk assessment for waste disposal at this facility are presented in this chapter. The PATHRAE model requires that information be provided about the site, the disposal facility, and the radionuclides in the waste. Information to characterize the site in sufficient detail to perform the risk assessment is presented in Section 4.1. Information about the disposal facility is presented in Section 4.2. The radionuclide inventory in the waste is characterized in Section 4.3.

4.1 SITE CHARACTERIZATION

The Clive disposal site is located in Tooele County approximately 140 km (85 road miles) west of Salt Lake City along Interstate 80. The site is in the eastern edge of the Great Salt Lake Desert, 5 km (3 mi) west of the Cedar Mountains, 4 km (2.5 mi) south of Interstate 80, and 1.6 km (1 mi) south of a switch point called Clive on the tracks of the Union Pacific system. The disposal facility is directly south of and adjacent to the cell used for the disposal of mill tailings that were removed from the former Vitro Chemical Company site in South Salt Lake City between February 1984 and December 1988. Figure 4-1 shows the location of the Clive disposal facility in relation to Salt Lake City and the surrounding area. The location of the Clive facility relative to the Vitro disposal cell is shown in Figure 4-2. The site boundary is taken to be the fenceline, 100 ft from the disposal unit edge.

The climate at the Clive site is arid desert, which means that evapotranspiration is at least five times precipitation. Meteorological conditions are generally similar to those at Wendover, Utah, 65 km (40 mi) to the west. The mean temperatures at Wendover range from about -3°C (27°F) in January to 26°C (79°F) in July. The average rainfall at Wendover is about 13 cm (5 in) per year. The lowest normal monthly precipitation is 7.4 mm (0.29 in)

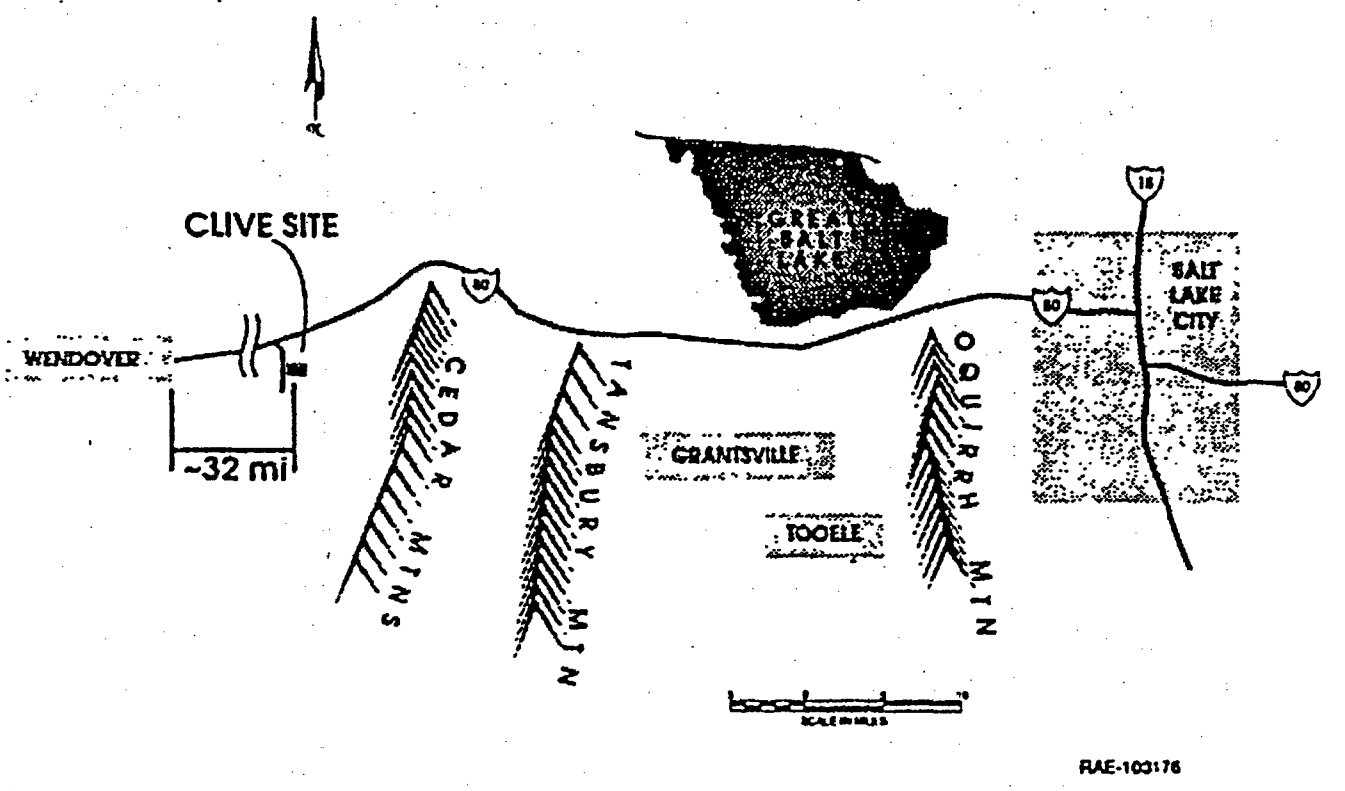

FIGURE 4-1. LOCATION OF CLIVE FACILITY IN TOOELE COUNTY.

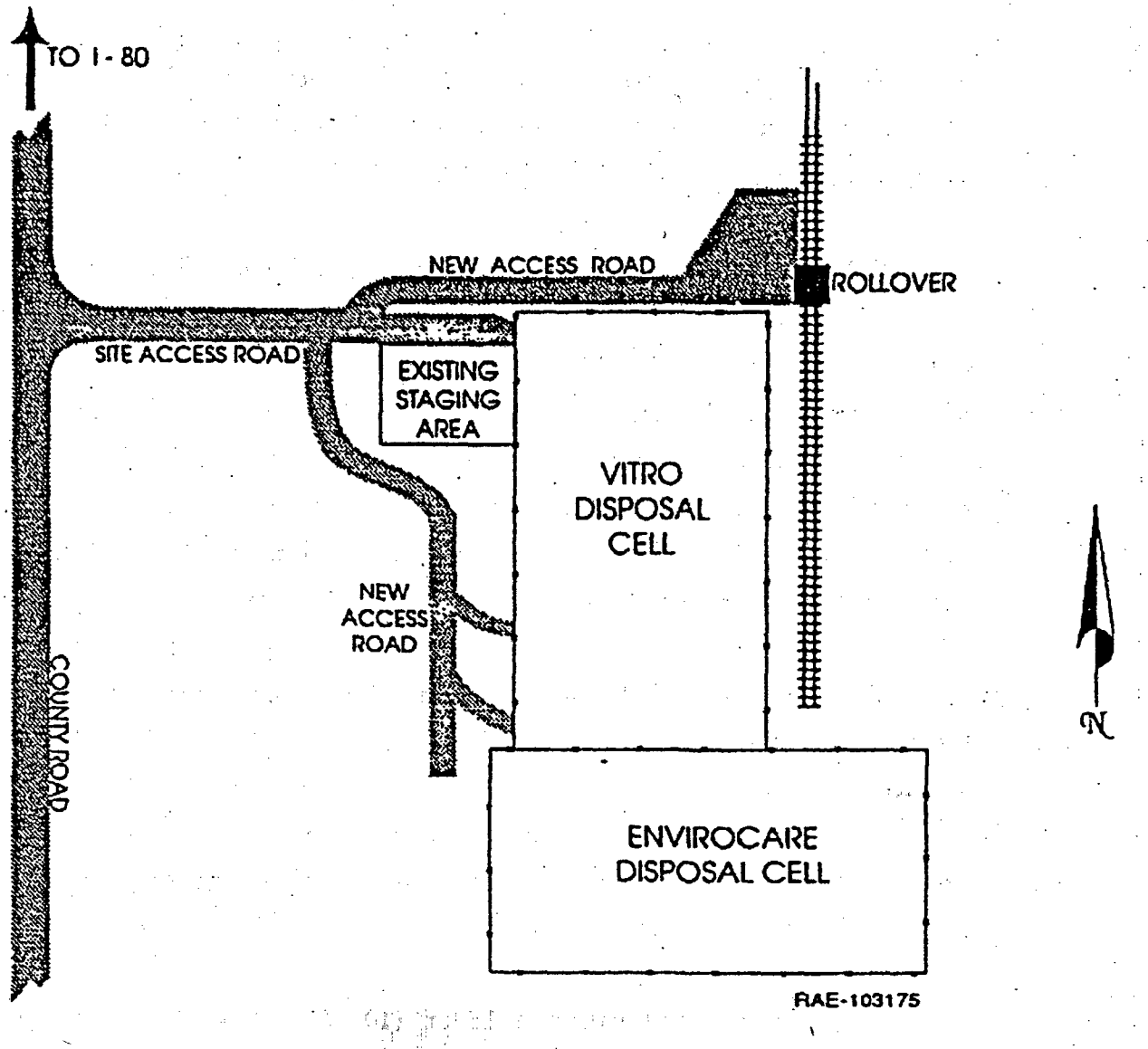

FIGURE 4-2. LOCATION OF CLIVE FACILITY RELATIVE TO THE VITRO SITE.

in January, while June has the highest with 18.5 mm (0.73 in). Thunderstorms occur in the summer. There is some snow in the winter.

Knowledge of the geology of the Clive site is incomplete. The following description of the hydrogeologic characteristics of the site is derived from the Environmental Impact Statement (EIS) for the disposal of the Vitro tailings.[10]

Holes drilled in preparation for the Vitro tailings EIS indicated that the surface alluvial soil is at least 45 m (150 ft) deep. This soil contains a water-table groundwater system that is 6 to 9 m (20 to 30 ft) below the surface. The water in this groundwater system is briny and contains high total dissolved solids and certain naturally-occurring radionuclides that make it unfit for human consumption. There are no perennial surface water bodies within 3.2 km (2 mi) of the site, not even gullies that would indicate intermittent channelized flow. From this it may be inferred that runoff from the Cedar Mountains to the east percolates into the ground before it reaches the Clive site.

Surface soils at the Clive site consist of light brown to tan sandy to clayey silt. The thickness of these surface soils ranges from about 1 m to 3.5 m (3 ft to 12 ft). Underlying the surface soils is an interlayered sequence of material ranging from fine- and medium-grained sands to silty clays. This interlayered sequence extends to depths of about 15 m (50 ft) below existing grade. Beneath the interlayered sequence the predominant material is a grayish-brown to brown silty sand with a consistency classification of medium dense to very dense.

Most of the land within a 16 km (10 mi) radius of the site is public domain administered by the Bureau of Land Management. There are no industrial, commercial, or residential activities near the site. Small amounts of sand and gravel have been produced from the alluvium surrounding the Cedar Mountains to the east. However, because of the ready availability of sand and gravel in areas that are much closer to metropolitan Salt Lake City, and the very small population in rural Tooele County, the demand for sand and gravel from Cedar Mountain gravel pits is very small.

The only use of the land in the immediate vicinity of the Clive site, prior to the disposal of the Vitro tailings, was for grazing of sheep, jackrabbit hunting, and occasional

recreation vehicle driving. The remoteness of the site from urban or industrial areas of Tooele County and the lack of potable water at the site make the surrounding area an improbable location for any other significant residential, commercial, or industrial use or development, although the Clive area has recently been zoned for hazardous waste disposal by Tooele County.

Certain physical characteristics of a disposal site have an important bearing on the migration of waste components from the disposal unit to human receptor locations as calculated by the PATHRAE model. These site characteristics include such things as depth to the water table, distance to the nearest well or stream, rainfall infiltration rate, wind speed and direction, and distance to the nearest off-site resident. Site parameter values used in this risk assessment are given in Table 4-1.

The values of some important site parameters such as leach rates and retardation rates depend not only on the site characteristics but on the radionuclide characteristics as well. Nuclide-dependent site parameter values for the Clive site are presented in Appendix A.

4.2 DISPOSAL CELL CHARACTERIZATION

The material proposed for disposal at the Clive facility includes contaminated soil and contaminated structural materials with very low concentrations of radioactive constituents. This material will be transported to the site in bulk form by rail (in gondola cars) or truck (with dump beds and dump bed trailers). During transportation the material will be covered to prevent dispersal along the transportation routes. A small fraction of the material for disposal will arrive in steel drums or other containers.

The material will be placed into a disposal cell or embankment constructed partly above grade and partly below grade. A cross section of the disposal cell is shown in Figure 4-3. The cell is currently used for the disposal of NORM waste, for which the facility operator is already licensed by the State of Utah. The cell is being constructed in a continuous "cut

TABLE 4-1

SITE PARAMETER VALUES

Parameter	Value	Units
Depth to water table	8.8	m
Distance to nearest surface water	2900	m
Distance to nearest well	1	m
Surface water infiltration rate	0.00124	m/yr
Horizontal velocity of groundwater	2.7	m/yr
Vertical velocity of groundwater	0.02	m/yr
Atmospheric distance to off-site receptor	500	m
Average wind speed	3	m/s
Percent of time blows toward receptor	100	percent
Dust deposition velocity	1.00E-07	m^3/s

Based on information from References 10 and 21.

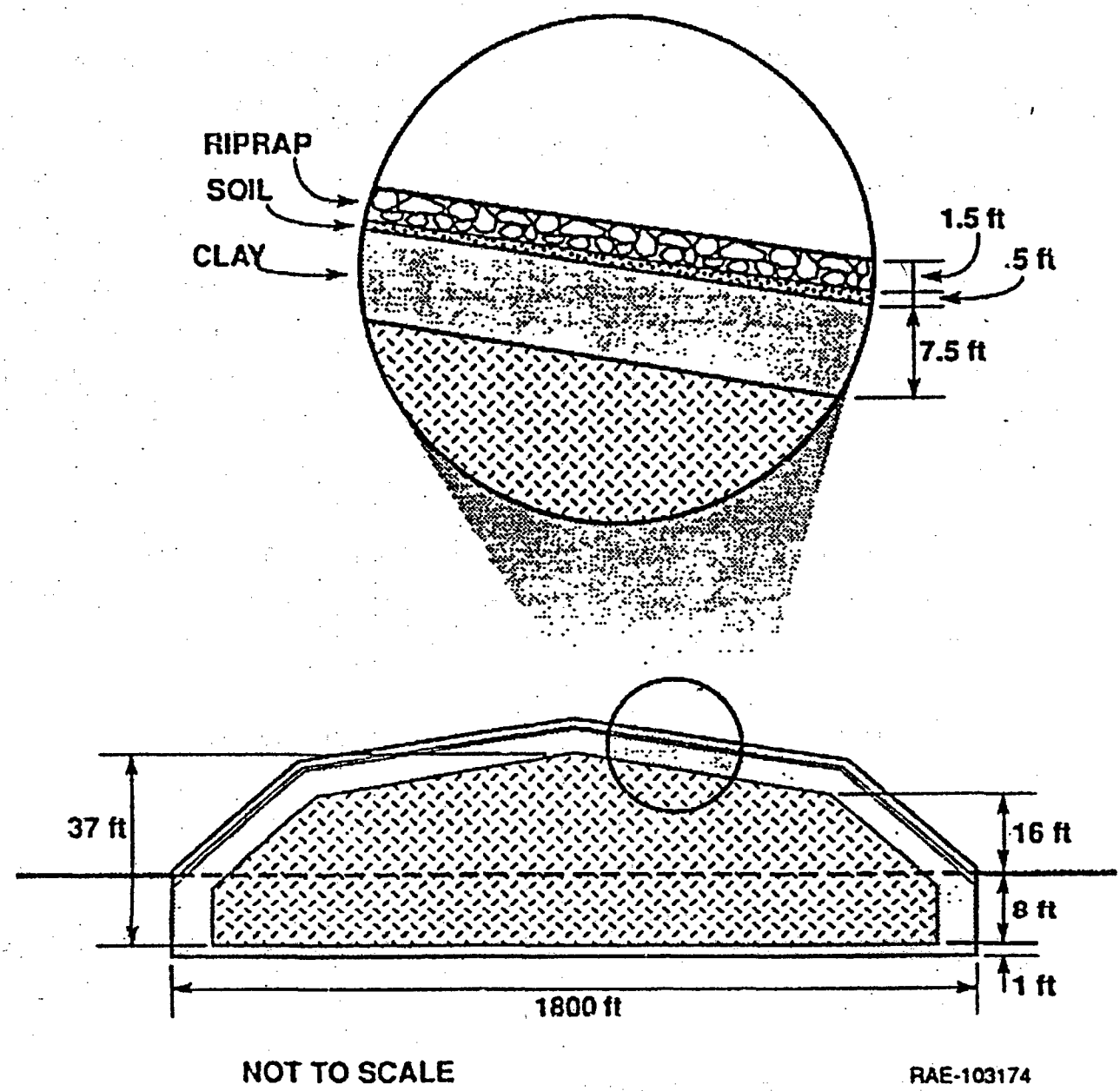

FIGURE 4-3. CROSS SECTION OF DISPOSAL CELL.

and cover operation ensuring that disposed material is not left without cover for an extended period of time. The material is placed in the cell in layers not exceeding 0.30 m (1 ft) uncompacted thickness, and is compacted before the next layer is placed.

As shown in Figure 4-3, the cell extends approximately 2.75 m (9 ft) below grade. The bottom 0.30 m (1 ft) of the cell consists of a scarified and re-compacted clay liner to retard seepage from the cell into undisturbed soil. The maximum height of the cell about grade, exclusive of cover, is about 8.85 m (29 ft).

The disposal cell cover is designed in accordance with NRC guidance on covers for uranium mill tailings piles. A 2.30 m (7.5 ft) thick compacted clay layer serves as a radon barrier. This clay layer is topped with a 0.15 m (0.5 ft) thick layer of sand and a 0.45 m (1.5 ft) thick layer of rip-rap. The rip-rap layer is designed to resist water and wind erosion as well as to discourage burrowing animals and plant root intrusion.

The top of the embankment is sloped to facilitate runoff of rainwater. Drainage ditches around the base of the embankment serve to intercept runoff and direct the flow into the natural drainage features west of the site.

Disposal cell parameter values used in this assessment are given in Table 4-2. As previously indicated, the cell is already being used for the disposal of NORM waste and about 20 percent of the design volume has been used or committed for NORM disposal.[24] To account for this, the cell length shown in Table 4-2 and used in this analysis is only 80 percent of the design length of the cell.

4.3 RADIONUCLIDE INVENTORY

The radionuclides assumed to be present in wastes that may be disposed at the Clive disposal facility are listed in Table 4-3. The list includes nuclides commonly encountered in radioactive materials and transuranics with half-lives greater than about 0.5 years. The dose calculations whose results are reported in Chapter 5 are based on nominal activity

TABLE 4-2

DISPOSAL CELL PARAMETER VALUES

Parameter	Value	Units
Expected operational period	20	yr
Custodial period	30	yr
Length of facility	540	m
Width of facility	550	m
Average depth of waste	9.3	m
Volume of waste	2.76E+06	m^3
Density of waste	1600	kg/m^3
Distance from bottom of waste to aquifer	6.4	m
Cover thickness	2.9	m

Based on References 21 and 22.

TABLE 4-3

RADIONUCLIDES EVALUATED FOR DISPOSAL AT THE CLIVE FACILITY

Nuclide	Half-life (years)
Am-241	4.32E+02
Am-243	7.38E+03
C-14	5.73E+03
Cd-109	1.27E+00
Cm-242	4.47E-01
Cm-243	2.85E+01
Cm-244	1.81E+01
Co-57	7.42E-01
Co-60	5.27E+00
Cs-134	2.06E+00
Cs-137	3.02E+01
Fe-55	2.70E+00
H-3	1.23E+01
I-129	1.57E+07
Mn-54	8.56E-01
Na-22	2.60E+00
Nb-94	2.03E+04
Ni-59	7.50E+04
Ni-63	1.00E+02
Np-237	2.04E+06
Pu-238	8.78E+01
Pu-239	2.41E+04
Pu-240	6.54E+03
Pu-241	1.44E+01
Pu-242	3.76E+05
Ra-226	1.60E+03
Ru-106	1.01E+00
Sn-113	3.15E-01
Sr-90	2.86E+01
Tc-99	2.13E+05
Th-230	7.70E+04
Th-232	1.40E+10
U-234	2.44E+05
U-235	7.08E+08
U-236	2.34E+07
U-238	4.47E+09
Zn-65	6.69E-01

concentrations of 1 pCi/g for each nuclide. Each nuclide is assumed to be uniformly distributed throughout the waste. The waste itself is assumed to be similar to the soil and construction materials currently being received for disposal at the Clive facility.

5. RISK ASSESSMENTS AND RESULTING WASTE DISPOSAL LIMITS

Projected doses (effective whole-body dose equivalent) to individuals from waste disposal at the Clive facility and radionuclide concentration limits derived from these projected doses are summarized in this chapter. The radionuclides for which doses and concentration limits are calculated are listed in Table 4-3. The dose calculations were performed using the PATHRAE computer model and assuming 1 pCi/g concentrations for individual radionuclides in the waste. For nuclides with radioactive daughters, the conservative assumption was made that the daughter nuclides are in secular equilibrium with the radioactive parent.

The proposed radionuclide concentration limits are based on the whole body dose criteria discussed in Section 3.6. These dose criteria are:

- 25 mrem/yr to any maximally exposed off-site individual.
- 100 mrem/yr for chronic exposure to a reclaimer after site closure.
- 500 mrem for acute exposure to a reclaimer after site closure.
- 1,250 mrem/quarter to an on-site worker during disposal operations.

Scaling factors were obtained by dividing the dose criterion that applies to a particular exposure scenario by the dose rate calculated for that scenario based on the assumption of 1 pCi/g concentration. Concentration limits were obtained by multiplying 1 pCi/g by the appropriate scaling factor.

5.1 EXPOSURE SCENARIOS

The exposure scenarios used to project doses to individuals from wastes disposed at the Clive facility include exposure to an on-site worker during disposal operations, exposure

to a maximally exposed off-site individual (either during operations or after the site is closed) and exposures to reclaimers who come on the closed site at the end of the institutional control period. Three reclaimer scenarios were evaluated: intruder-explorer, intruder-construction, and intruder-agriculture. Brief descriptions of each of these exposure scenarios, including exposure pathways and major assumptions that were used, are presented in the following subsections. Table 5-1 summarizes the exposure pathways included in the characterization of each exposure scenario. The exposure pathways are described in Chapter 2.

5.1.1 On-Site Workers

On-site workers are assumed to be badged radiation workers working under an effective approved radiation protection program. These workers are assumed to be directly exposed to gamma radiation from unshielded waste and to inhale contaminated dust resuspended by site activities. No respiratory protection is assumed, though this would likely be part of the radiation protection program. The maximum exposed worker is assumed to be subject to these exposure mechanisms for 2,000 hours each year (40 hrs/wk for 50 weeks per year).

The dose criterion applicable to this scenario corresponds to the annual limitation placed on radiation workers, i.e., 1,250 mrem/quarter.

5.1.2 Maximum Exposed Off-Site Individual

The maximum exposed off-site individual is assumed to live just beyond the fenceline located 100 ft from the edge of the disposal unit. During disposal operations, the two major pathways for exposure to this individual are direct gamma exposure from the open working face and inhalation of contaminated dust from on-site operations. After the site is closed, potential exposure pathways for exposure to an off-site individual include groundwater discharge to a well, groundwater discharge to surface water, site overflow to surface water, and erosion with surface discharge to surface water.

TABLE 5-1

EXPOSURE PATHWAYS USED IN DOSE ASSESSMENTS

Exposure Pathways	Exposure Scenario: Intruder Construction 30 yrs	Intruder Construction 1000 yrs	Intruder Agriculture 30 yrs	Intruder Agriculture 1000 yrs	Intruder Explorer	Maximum Off-site Individual	On-Site Worker
Groundwater to Surface Discharge						•	
Groundwater to 1 m Well at 30 years			•				
Groundwater to 1 m Well at 1000 years				•			
Erosion to River						•	
Site Overflow to Surface Water						•	
Food Grown on Site at 30 Years			•				
Food Grown on Site at 1000 Years				•			
Direct Gamma - Maximum Explorer					•		
Direct Gamma - Agricultural at 30 years			•				
Direct Gamma - Agricultural at 1000 years				•			
Direct Gamma - Construction at 30 years	•						
Direct Gamma - Construction at 1000 years		•					
Direct Gamma - Operational On-site							•
Direct Gamma - Operational Off-site						•	
Dust - Agricultural at 30 years			•				
Dust - Agricultural at 1000 years				•			
Dust - Construction at 30 years	•						
Dust - Construction at 1000 years		•					
Dust - Operational On-site							•
Atmospheric Transport of Dust Off-site						•	

These assumed exposure mechanisms for off-site individuals, which are standard risk assessment assumptions, are certainly conservative for the Clive site. No off-site individual currently lives within 24 km (15 mi.) of the site. Because of the arid climate and the briny quality of the groundwater which makes it unfit for human consumption, it is very unlikely that anyone would choose to live near the site in the foreseeable future. Furthermore, as noted in the site description in Chapter 4, there are no perennial surface water bodies within 3 km (2 mi) of the site. Doses from potential exposure pathways that might be applicable to an off-site individual after site closure were all estimated to be zero for this Clive facility risk assessment.

This off-site individual is a member of the general public. Therefore, the applicable dose criterion is 25 mrem/yr to the whole body or 75 mrem/yr to the thyroid.

5.1.3 Intruder-Explorer

This exposure scenario reflects the possibility that a transient might visit the site from time to time, and even reside there for a time at the conclusion of the institutional control period. The transient is assumed to be completely non-intrusive (i.e., no digging into the cover or waste). The only exposure mechanism would be direct gamma exposure from the covered waste. The transient is assumed to spend 1,000 hours per year at the site. The dose criterion for this individual is the same as that for the maximum exposed off-site individual, i.e., 25 mrem/yr.

5.1.4 Intruder-Construction

For the intruder-construction scenario a reclaimer is postulated to come onto the site at the conclusion of disposal operations and to build a house on the site. The reclaimer excavates for a basement for the house and also digs a well through the cover into the waste. In the process of building the house and digging a well, waste material is brought to the surface where it is spread and mixed with the top 0.3 m (1 ft) of cover. The reclaimer spends 500 hours in building the house and digging the well, and leaves the site when the house is

completed This activity results in an acute (short term) exposure, in contrast to the chronic exposure experienced by the agricultural reclaimer (Section 5 1.5) Therefore, the dose criterion that applies to this exposure scenario is 500 mrem

During the 500 hours spent on the site, the construction reclaimer is assumed to be exposed to direct gamma radiation from both the covered waste and the contaminated material brought to the surface. In addition, this individual inhales contaminated dust resuspended by construction activities.

Because of the riprap layer on top of the proposed disposal units, the lack of potable water at the site, and the general aridity of the area, it is considered highly unlikely that a residence would ever actually be constructed as assumed. This fact notwithstanding, two times were selected for the dose assessment of this scenario. The first time selected was at the end of the 30-year custodial period, and the second was 1,000 years after site closure.

5.1.5 Intruder-Agriculture

For the intruder-agriculture scenario a reclaimer is postulated to live in the house built over and into the waste and to engage in farming activities on the site. It is assumed that in the process of building the house and digging a well, waste material is brought to the surface where it is spread and mixed with the top 0.3 m (1 ft) of cover. The agricultural reclaimer is postulated to be exposed continuously to gamma radiation from both the covered waste and the contaminated surface material. In addition, this individual inhales contaminated dust during the 2,190 hours per year spent outside the house. The agricultural reclaimer obtains 50 percent of his food from crops grown on-site in contaminated soil and consumes 730 liters of potentially contaminated well water each year. Because these doses would continue year after year, the chronic dose criterion to intruders applies, i.e., 100 mrem/yr.

As in the case of the intruder-construction scenario, two times were selected for the dose assessment. The first time selected was at the end of the 30-year custodial period, and the second was 1,000 years after site closure.

The conditions and assumptions used with the intruder-agriculture scenario are typical of those employed in risk assessments for low-level radioactive waste disposal. These assumptions result in conservatively large estimates of potential doses to an intruder engaging in agricultural activities on a closed disposal site. As previously noted in connection with the off-site individual exposure scenario, the arid cond[illegible] at the site and the lack of potable water make it very unlikely -- at least in the foreseeable future -- that a person would reside at or engage in agriculture on the Clive site.

5.2 DOSE ASSESSMENT RESULTS

The dose assessment results for individual exposure pathways are presented, by nuclide, in Table 5-2. Site and facility parameters used as bases for these dose calculations are discussed in Chapter 4. Nuclide-specific site parameters and the inhalation, ingestion, and direct gamma dose conversion factors used in the calculations are given in Appendix A. As previously noted, doses are based on radionuclide concentrations of 1 pCi/g for each nuclide assumed to be present in the waste. For Cm-242, Cm-243, Cm-244, Pu-238, Pu-241, Ra-226, Ru-106, Sr-90, and Th-232 the radioactive parent is assumed to be in secular equilibrium with their radioactive daughters.

Exposure pathways A through E in Table 5-2 are contaminant movement pathways involving water as the transporting medium. Because of the arid climate and impermeable soils, water pathways are estimated not to contribute to individual doses from waste disposed at the Clive facility for at least 1,000 years after site closure, with the exceptions of C-14 and Tc-99 in well water. An evaluation of the potential for water to accumulate in the Clive disposal units is presented in Appendix B.

Exposure pathways F and G in Table 5-2 are foodchain pathways. Exposure pathways H through N are gamma exposure pathways which are assumed to be active during operations and after closure. Exposure pathways O through T are inhalation pathways which are assumed to be active during operations and after closure.

TABLE 5-2

PATHWAY DOSE RATES BY NUCLIDE

Nuclide	A Groundwater to Surface Discharge Maximum Dose Rate (mrem/yr /pCi/g)	B Groundwater to 1 m Well at 30 yrs Dose Rate (mrem/yr /pCi/g)	C Groundwater to 1 m Well at 1000 yrs Dose Rate (mrem/yr /pCi/g)	D Erosion to River Dose Rate (mrem/yr /pCi/g)	E Site Overflow Dose Rate (mrem/yr /pCi/g)
Am-241	0	0	0	0	0
Am-243	0	0	0	0	0
C-14	0	0	6.7E-01	0	0
Cd-109	0	0	0	0	0
Cm-242	0	0	0	0	0
Cm-242*	0	0	0	0	0
Cm-243	0	0	0	0	0
Cm-243*	0	0	0	0	0
Cm-244	0	0	0	0	0
Cm-244*	0	0	0	0	0
Co-57	0	0	0	0	0
Co-60	0	0	0	0	0
Cs-134	0	0	0	0	0
Cs-137	0	0	0	0	0
Fe-55	0	0	0	0	0
H-3	0	0	0	0	0
I-129	0	0	0	0	0
Mn-54	0	0	0	0	0
Na-22	0	0	0	0	0
Nb-94	0	0	0	0	0
Ni-59	0	0	0	0	0
Ni-63	0	0	0	0	0
Np-237	0	0	0	0	0
Pu-238	0	0	0	0	0
Pu-238*	0	0	0	0	0
Pu-239	0	0	0	0	0
Pu-240	0	0	0	0	0
Pu-241	0	0	0	0	0
Pu-241*	0	0	0	0	0
Pu-242	0	0	0	0	0
Ra-226	0	0	0	0	0
Ra-226*	0	0	0	0	0
Ru-106	0	0	0	0	0
Ru-106*	0	0	0	0	0
Sn-113	0	0	0	0	0
Sr-90	0	0	0	0	0
Sr-90*	0	0	0	0	0
Tc-99	0	0	5.8E+00	0	0
Th-230	0	0	0	0	0
Th-232	0	0	0	0	0
Th-232*	0	0	0	0	0
U-234	0	0	0	0	0
U-235	0	0	0	0	0
U-236	0	0	0	0	0
U-238	0	0	0	0	0
U-Nat.	0	0	0	0	0
Zn-65	0	0	0	0	0

* Denotes dose rates generated by nuclide plus its significant daughters in equilibrium.

TABLE 5-2

PATHWAY DOSE RATES BY NUCLIDE

Nuclide	F Food Grown on Site at 30 yrs Dose Rate (mrem/yr /pCi/g)	G Food Grown on Site at 1000 yrs Dose Rate (mrem/yr /pCi/g)	H Maximum Explorer Gamma Dose Rate (mrem/yr /pCi/g)	I 30 yr Agricultural Direct Gamma Dose Rate (mrem/yr /pCi/g)	J 1000 yr Agricultural Direct Gamma Dose Rate (mrem/yr /pCi/g)
Am-241	1.3E-05	2.7E-06	8.7E-36	2.0E-02	1.2E-02
Am-243	1.4E-05	1.2E-05	9.4E-25	2.5E-02	6.5E-02
C-14	0	0	0	0	0
Cd-109	3.2E-13	0	0	5.2E-11	0
Cm-242	8.5E-28	0	0	1.5E-25	0
Cm-242*	1.8E-05	9.5E-06	7.1E-18	6.9E-04	5.6E-04
Cm-243	3.3E-05	1.8E-15	3.1E-24	1.7E-02	2.8E-12
Cm-243*	4.5E-05	1.2E-05	3.1E-24	1.7E-02	8.3E-04
Cm-244	1.5E-05	1.1E-21	1.1E-18	4.1E-05	8.5E-21
Cm-244*	2.7E-05	1.1E-05	1.1E-18	3.4E-04	7.5E-04
Co-57	1.8E-20	0	0	2.1E-15	0
Co-60	9.0E-08	0	1.9E-11	3.0E-03	0
Cs-134	3.1E-10	0	1.1E-17	2.0E-06	0
Cs-137	1.4E-05	3.1E-15	2.9E-13	5.3E-02	3.2E-11
Fe-55	4.4E-12	0	0	1.5E-08	0
H-3	0	0	0	0	0
I-129	2.4E-04	2.0E-04	7.8E-36	1.7E-02	3.9E-02
Mn-54	1.6E-18	0	2.1E-23	2.9E-13	0
Na-22	9.5E-09	0	1.6E-13	2.5E-05	0
Nb-94	4.1E-05	4.0E-05	2.4E-11	3.3E-01	9.1E-01
Ni-59	2.1E-07	2.0E-07	6.1E-37	3.3E-04	9.1E-04
Ni-63	4.2E-07	5.0E-10	0	0	0
Np-237	1.2E-04	1.2E-04	9.8E-36	2.1E-02	5.9E-02
Pu-238	5.0E-06	3.7E-09	4.6E-37	4.8E-04	6.5E-07
Pu-238*	1.8E-05	9.5E-06	7.1E-18	6.9E-04	5.6E-04
Pu-239	1.2E-05	1.2E-05	2.6E-37	3.0E-04	8.3E-04
Pu-240	1.2E-05	1.1E-05	1.8E-28	3.0E-04	7.5E-04
Pu-241	3.7E-08	2.0E-28	0	0	0
Pu-241*	1.3E-04	1.2E-04	1.8E-35	4.1E-02	7.1E-02
Pu-242	1.2E-05	1.2E-05	3.5E-37	5.3E-04	1.5E-03
Ra-226	4.9E-05	4.9E-05	8.3E-27	2.9E-03	8.2E-03
Ra-226*	1.7E-02	1.1E-02	7.3E-09	3.5E-01	6.4E-01
Ru-106	9.5E-14	0	0	0	0
Ru-106*	1.3E-13	0	1.3E-24	3.5E-12	0
Sn-113	5.5E-37	0	0	0	0
Sr-90	1.4E-05	8.5E-16	0	0	0
Sr-90*	1.4E-05	8.7E-16	0	0	0
Tc-99	4.2E-04	2.7E-04	0	0	0
Th-230	2.7E-05	2.7E-05	1.0E-35	4.4E-04	1.3E-03
Th-232	1.4E-04	1.4E-04	4.9E-37	5.2E-04	1.5E-03
Th-232*	2.8E-04	2.8E-04	6.7E-08	5.0E-01	1.4E+00
U-234	9.5E-06	9.5E-06	7.1E-18	2.0E-04	5.8E-04
U-235	9.0E-06	9.0E-06	1.4E-26	6.8E-02	1.9E-01
U-236	9.0E-06	9.0E-06	1.5E-37	3.4E-04	9.7E-04
U-238	8.0E-06	8.0E-06	4.8E-37	5.1E-04	1.4E-03
U-Nat.	8.8E-06	8.8E-06	3.6E-18	1.8E-03	5.1E-03
Zn-65	2.0E-18	0	2.3E-25	1.6E-16	0

* Denotes dose rates generated by nuclide plus its significant daughters in equilibrium

TABLE 5-2

PATHWAY DOSE RATES BY NUCLIDE

Nuclide	K 30 yr Construction Direct Gamma Dose Rate (mrem/yr /pCi/g)	L 1000 yr Construction Direct Gamma Dose Rate (mrem/yr /pCi/g)	M Operational Direct Gamma Dose Rate (mrem/yr /pCi/g)	N Operational Off-site Gamma Dose Rate (mrem/yr /pCi/g)	O 30 yr Agricultural Dust Inhalation Dose Rate (mrem/yr /pCi/g)
Am-241	1.1E-03	6.7E-04	1.7E+00	0	5.0E-04
Am-243	1.4E-03	2.7E-03	2.2E+00	1.1E-03	5.2E-04
C-14	0	0	0	0	2.1E-09
Cd-109	3.0E-12	0	1.1E-01	0	7.1E-16
Cm-242	8.3E-27	0	3.1E-03	0	3.5E-27
Cm-247*	3.9E-05	3.2E-05	1.0E-01	5.9E-05	4.7E-04
Cm-243	9.8E-04	1.8E-13	3.0E+00	1.6E-01	1.3E-04
Cm-243*	1.0E-03	4.7E-05	3.1E+00	1.6E-01	6.4E-04
Cm-244	.3E-06	4.9E-22	1.1E-02	0	8.0E-05
Cm-244*	1.9E-05	4.3E-05	3.7E-02	0	5.7E-04
Co-57	1.2E-16	0	2.6E-01	1.5E-01	2.7E-22
Co-60	1.7E-04	0	1.4E+01	3.0E+00	1.0E-09
Cs-134	1.2E-07	0	4.2E+00	2.3E+00	2.9E-13
Cs-137	3.0E-03	1.8E-12	8.9E+00	9.0E-01	1.3E-08
Fe-55	8.5E-10	0	2.8E-03	0	2.3E-13
H-3	0	0	0	0	6.9E-12
I-129	9.7E-04	2.2E-03	1.5E+00	0	1.8E-07
Mn-54	1.7E-14	0	8.9E-01	1.1E+00	1.1E-20
Na-22	1.4E-06	0	6.4E+00	3.0E+00	5.0E-13
Nb-94	1.9E-02	5.2E-02	2.8E+01	2.2E+00	3.3E-07
Ni-59	1.9E-06	5.2E-05	7.2E-02	0	2.7E-09
Ni-63	0	0	0	0	4.8E-09
Np-237	1.2E-03	3.4E-03	1.8E+00	8.6E-03	6.9E-04
Pu-238	2.8E-05	3.7E-08	8.2E-02	0	3.4E-04
Pu-238*	3.9E-05	3.2E-05	1.0E-01	5.9E-05	4.7E-04
Pu-239	1.7E-05	4.7E-05	3.7E-02	7.0E-05	5.1E-04
Pu-240	1.7E-05	4.3E-05	2.6E-02	0	5.1E-04
Pu-241	0	0	0	0	1.5E-06
Pu-241*	2.3E-03	4.1E-03	3.6E+00	0	9.9E-04
Pu-242	3.0E-05	8.5E-05	5.6E-02	0	4.8E-04
Ra-226	1.6E-04	4.6E-04	2.5E-01	8.5E-03	7.9E-06
Ra-226*	2.0E-02	3.6E-02	3.0E+01	2.2E+00	2.9E-05
Ru-106	0	0	0	0	3.7E-17
Ru-106*	2.0E-13	0	2.6E-01	3.1E-01	3.7E-17
Sn-113	0	0	6.8E-03	7.9E-03	4.3E-39
Sr-90	0	0	0	0	5.0E-07
Sr-90*	0	0	0	0	5.0E-07
Tc-99	0	0	0	0	7.5E-09
Th-230	2.5E-05	7.0E-05	3.7E-02	1.6E-04	3.2E-04
Th-232	3.0E-05	8.4E-05	6.9E-02	8.6E-05	1.6E-03
Th-232*	2.9E-02	8.0E-02	4.3E+01	3.0E+00	1.9E-03
U-234	1.1E-05	3.2E-05	1.7E-02	5.9E-05	1.3E-04
U-235	3.9E-03	1.1E-02	5.8E+00	2.0E-01	1.2E-04
U-236	2.0E-05	5.5E-05	2.9E-02	0	1.2E-04
U-238	2.9E-05	8.1E-05	5.8E-02	0	1.2E-04
U-Nat	1.0E-04	3.0E-04	1.7E-01	0	1.3E-04
Zn-65	9.2E-18	0	4.4E-01	7.3E-01	2.8E-23

* Denotes dose rates generated by nuclide plus its significant daughters in equilibrium

TABLE 5-2

PATHWAY DOSE RATES BY NUCLIDE

Nuclide	P 1000 yr Agricultural Dust Inhalation Dose Rate (mrem/yr /pCi/g)	Q 30 yr Construction Dust Inhalation Dose Rate (mrem/yr /pCi/g)	R 1000 yr Construction Dust Inhalation Dose Rate (mrem/yr /pCi/g)	S Operational Dust Inhalation Dose Rate (mrem/yr /pCi/g)	T Operational Atmospheric Off-site Transport Dose Rate (mrem/yr /pCi/g)
Am-241	1.1E-04	5.7E-04	1.2E-04	4.7E-01	1.5E-01
Am-243	4.8E-04	6.0E-04	5.4E-04	4.7E-01	1.5E-01
C-14	1.2E-09	2.4E-09	1.4E-09	1.9E-06	6.1E-07
Cd-109	0	8.1E-16	0	8.4E-06	2.7E-06
Cm-242	0	3.9E-27	0	5.0E-04	1.6E-04
Cm-242*	1.3E-04	5.4E-04	1.5E-04	6.1E-01	1.8E-01
Cm-243	0	1.5E-04	8.7E-15	2.6E-01	8.0E-02
Cm-243*	5.1E-04	7.4E-04	5.8E-04	7.2E-01	2.3E-01
Cm-244	4.4E-21	6.9E-05	5.1E-21	1.7E-01	5.5E-02
Cm-244*	4.6E-04	6.5E-04	5.3E-04	8.4E-01	2.1E-01
Co-57	0	3.1E-22	0	3.7E-07	1.2E-07
Co-60	0	1.2E-09	0	4.8E-05	1.5E-05
Cs-134	0	3.3E-13	0	6.4E-06	2.0E-06
Cs-137	2.8E-18	1.5E-08	3.2E-18	2.4E-05	7.4E-06
Fe-55	0	2.6E-13	0	4.6E-07	1.5E-07
H-3	8.2E-36	7.9E-12	9.4E-36	3.5E-08	1.1E-08
I-129	1.5E-07	2.1E-07	1.7E-07	1.6E-04	5.2E-05
Mn-54	0	1.3E-20	0	3.7E-07	1.1E-07
Na-22	0	5.7E-13	0	1.4E-06	4.3E-07
Nb-94	3.2E-07	3.8E-07	3.7E-07	3.0E-04	9.6E-05
Ni-59	2.7E-09	3.1E-09	3.1E-09	2.5E-06	7.8E-07
Ni-63	5.8E-12	5.5E-09	6.6E-12	5.4E-06	1.7E-06
Np-237	4.9E-04	5.8E-04	5.6E-04	4.6E-01	1.4E-01
Pu-238	1.6E-07	3.9E-04	1.8E-07	3.9E-01	1.2E-01
Pu-238*	1.3E-04	5.4E-04	1.6E-04	5.1E-01	1.5E-01
Pu-239	5.1E-04	5.9E-04	5.8E-04	4.7E-01	1.5E-01
Pu-240	4.6E-04	5.8E-04	5.3E-04	4.7E-01	1.5E-01
Pu-241	8.0E-27	1.7E-06	9.2E-27	5.8E-03	1.9E-03
Pu-241*	6.0E-04	1.1E-03	6.8E-04	9.2E-01	2.9E-01
Pu-242	4.8E-04	5.5E-04	5.5E-04	4.4E-01	1.4E-01
Ra-226	7.9E-06	9.0E-06	9.0E-06	7.2E-03	2.3E-03
Ra-226*	1.9E-05	3.3E-05	2.2E-05	2.6E-02	8.4E-03
Ru-106	0	4.2E-17	0	2.9E-05	9.3E-06
Ru-106*	0	4.2E-17	0	2.9E-05	9.3E-06
Sn-113	0	5.0E-39	0	1.8E-07	5.9E-08
Sr-90	3.1E-17	5.7E-07	3.5E-17	9.1E-04	3.0E-04
Sr-90*	3.1E-17	5.7E-07	2.2E-19	9.2E-04	3.0E-04
Tc-99	4.8E-09	8.5E-09	5.5E-09	6.8E-06	2.2E-06
Th-230	3.2E-04	3.7E-04	3.7E-04	2.9E-01	9.3E-02
Th-232	1.6E-03	1.8E-03	1.8E-03	1.5E+00	4.6E-01
Th-232*	1.9E-03	2.2E-03	2.2E-03	1.7E+00	5.6E-01
U-234	1.3E-04	1.5E-04	1.5E-04	1.2E-01	3.8E-02
U-235	1.2E-04	1.4E-04	1.4E-04	1.1E-01	3.5E-02
U-236	1.2E-04	1.4E-04	1.4E-04	1.1E-01	3.5E-02
U-238	1.2E-04	1.4E-04	1.4E-04	1.1E-01	3.5E-02
U-Nat.	1.3E-04	1.5E-04	1.5E-04	1.1E-01	3.7E-02
Zn-65	0	3.2E-23	0	7.9E-07	2.5E-07

* Denotes dose rates generated by nuclide plus its significant daughters in equilibrium.

The C-14 doses shown in Table 5-2 assume no loss of carbon from the waste due to volatilization. Since some volatilization of carbon will likely occur, these doses are conservatively large. An empirical rule followed in some dose assessments is to reduce the C-14 doses by about a factor of three in order to account for the volatilization of this radionuclide.[23] However, to ensure conservatism, this rule was not used in this dose assessment.

Projected total doses to individuals, and radionuclide concentration limits derived from these doses are shown in Table 5-3 for each exposure scenario described in Section 5.1. The exposure scenario doses were estimated by summing the pathway doses for the pathways appropriate to each scenario. Since, in evaluating pathway doses, the entire radionuclide inventory was assumed to be available for producing exposure via that pathway, summing the pathway doses results in conservatively high estimates of total doses for the exposure scenarios.

The exposure scenario doses shown in Table 5-3 are for 1 pCi/g concentrations of each radionuclide. The exposure scenario concentration limits are based on these 1 pCi/g doses and on the applicable dose criterion for each exposure scenario.

5.3 RADIONUCLIDE CONCENTRATION LIMITS

Suggested radionuclide concentration limits for each nuclide postulated to be present in wastes disposed of at the Clive facility are shown in Table 5-4. The concentration limit for a particular radionuclide is the most restrictive (smallest) of the concentration limits for that nuclide shown in Table 5-3. The exposure scenario that results in the most restrictive concentration limit for each radionuclide is also shown in Table 5-4. Concentration limits are suggested for two conditions: all exposure scenarios considered and only realistic scenarios considered, the former being more restrictive.

In the vast majority of instances, where all exposure scenarios are considered, the most restrictive is the maximum off-site individual scenario. For three nuclides the limiting

TABLE 5-3

DOSE RATES AND CONCENTRATION LIMITS BY NUCLIDE
FOR EACH EXPOSURE SCENARIO

	K + Q		L + R		B + E + F + I + D		C + E + G + J + P	
	Intruder Construction Dose criterion = 500 mrem/yr				Intruder Agriculture Dose criterion = 100 mrem/yr			
	at 30 yrs		at 1000 yrs		at 30 yrs		at 1000 yrs	
Nuclide	Dose Rate (mrem/yr /pCi/g)	Allowable Concentration in Waste (pCi/g)	Dose Rate (mrem/yr /pCi/g)	Allowable Concentration in Waste (pCi/g)	Dose Rate (mrem/yr /pCi/g)	Allowable Concentration in Waste (pCi/g)	Dose Rate (mrem/yr /pCi/g)	Allowable Concentration in Waste (pCi/g)
Am-241	1.7E-03	2.9E+06	7.9E-04	6.3E+06	2.1E-02	4.9E+03	1.2E-02	8.2E+03
Am-243	2.0E-03	2.5E+05	4.2E-03	1.2E+05	2.6E-02	3.9E+03	6.5E-02	1.5E+03
C-14	2.4E-09	2.1E+11	1.4E-09	3.6E+11	2.1E-09	4.8E+10	6.7E-01	1.5E+02
Cd-109	3.0E-12	1.7E+14	0	-	5.2E-11	1.9E+12	3.2E-13	3.1E+14
Cm-242	1.2E-26	4.1E+28	0	-	1.5E-25	6.5E+26	5.5E-28	1.8E+29
Cm-242*	5.8E-04	8.6E+05	1.8E-04	2.7E+06	1.2E-03	8.5E+04	7.1E-04	1.4E+05
Cm-243	1.1E-03	4.4E+05	1.7E-13	3.0E+15	1.7E-02	5.8E+03	3.3E-05	3.0E+06
Cm-243*	1.7E-03	2.9E+05	6.3E-04	8.0E+05	1.8E-02	5.6E+03	1.4E-03	7.2E+04
Cm-244	7.1E-05	7.0E+06	5.8E-21	8.9E+22	1.2E-04	8.6E+05	1.5E-05	6.7E+06
Cm-244*	6.7E-04	7.5E+05	5.7E-04	6.7E+05	9.4E-04	1.1E+05	1.2E-03	8.1E+04
Co-57	1.2E-16	4.2E+18	0	-	2.1E-15	4.8E+16	1.8E-20	5.6E+21
Co-60	1.7E-04	2.9E+06	0	-	3.0E-03	3.3E+04	9.0E-08	1.1E+09
Cs-134	1.2E-07	4.2E+09	0	-	2.0E-06	5.0E+07	3.1E-10	3.2E+11
Cs-137	3.0E-03	1.7E+05	1.8E-12	2.8E+14	5.3E-02	1.9E+03	1.4E-05	7.1E+06
Fe-55	8.5E-10	5.9E+11	0	-	1.5E-08	6.7E+09	4.4E-12	2.3E+13
H-3	7.9E-12	6.3E+13	9.4E-36	5.3E+37	6.9E-12	1.4E+13	8.2E-36	1.2E+37
I-129	9.7E-04	5.2E+05	2.2E-03	2.3E+05	1.7E-02	5.8E+03	3.9E-02	2.5E+03
Mn-54	1.7E-14	3.0E+16	0	-	2.9E-13	3.4E+14	1.8E-18	5.6E+19
Na-22	1.4E-06	3.5E+08	0	-	2.5E-05	4.0E+06	9.5E-09	1.1E+10
Nb-94	1.9E-02	2.7E+04	5.2E-02	9.6E+03	3.3E-01	3.0E+02	9.1E-01	1.1E+02
Ni-59	1.9E-05	2.7E+07	5.2E-05	9.6E+06	3.3E-04	3.0E+05	9.1E-04	1.1E+05
Ni-63	5.5E-09	9.1E+10	6.8E-12	7.6E+13	4.2E-07	2.4E+08	4.2E-07	2.4E+08
Np-237	1.8E-03	2.8E+05	4.0E-03	1.3E+05	2.2E-02	4.6E+03	6.0E-02	1.7E+03
Pu-238	4.2E-04	1.2E+06	2.2E-07	2.3E+09	8.4E-04	1.2E+05	8.8E-06	1.1E+07
Pu-238*	5.8E-04	8.6E+05	1.8E-04	2.7E+06	1.2E-03	8.5E+04	7.1E-04	1.4E+05
Pu-239	6.1E-04	8.2E+05	6.3E-04	8.0E+05	8.2E-04	1.2E+05	1.4E-03	7.4E+04
Pu-240	6.0E-04	8.4E+05	5.7E-04	8.7E+05	8.2E-04	1.2E+05	1.2E-03	8.2E+04
Pu-241	1.7E-06	2.9E+08	9.2E-27	5.4E+28	1.5E-06	6.5E+07	3.7E-08	2.7E+09
Pu-241*	3.5E-03	1.4E+05	4.8E-03	1.1E+05	4.2E-02	2.4E+03	7.2E-02	1.4E+03
Pu-242	5.8E-04	8.6E+05	6.4E-04	7.9E+05	1.0E-03	9.8E+04	2.0E-03	5.0E+04
Ra-226	1.7E-04	3.0E+06	4.7E-04	1.1E+06	3.0E-03	3.4E+04	8.3E-03	1.2E+04
Ra-226*	2.0E-02	2.5E+04	3.6E-02	1.4E+04	3.7E-01	2.7E+02	6.6E-01	1.5E+02
Ru-106	4.2E-17	1.2E+19	0	-	9.5E-14	1.1E+15	9.5E-14	1.1E+15
Ru-106*	2.0E-13	2.5E+15	0	-	3.6E-12	2.8E+13	1.3E-13	7.7E+14
Sn-113	5.0E-39	1.0E+41	0	-	6.5E-37	1.5E+38	6.5E-37	1.5E+38
Sr-90	5.7E-07	8.8E+08	3.5E-17	1.4E+19	1.4E-05	7.1E+06	1.4E-05	7.4E+06
Sr-90*	5.7E-07	8.7E+08	2.2E-19	2.3E+21	1.4E-05	7.0E+06	1.4E-05	7.3E+06
Tc-99	6.5E-09	5.9E+10	5.5E-09	9.1E+10	4.2E-04	2.4E+05	5.8E+00	1.7E+01
Th-230	4.0E-04	1.3E+06	4.4E-04	1.1E+06	7.9E-04	1.3E+05	1.6E-03	6.1E+04
Th-232	1.8E-03	2.7E+05	1.9E-03	2.7E+05	2.3E-03	4.4E+04	3.2E-03	3.1E+04
Th-232*	3.1E-02	1.6E+04	8.2E-02	6.1E+03	5.0E-01	2.0E+02	1.4E+00	7.1E+01
U-234	1.6E-04	3.1E+06	1.8E-04	2.7E+06	3.4E-04	2.9E+05	7.0E-04	1.4E+05
U-235	4.0E-03	1.2E+06	1.1E-02	4.5E+04	6.8E-02	1.5E+03	1.9E-01	5.3E+02
U-236	1.6E-04	3.1E+06	2.0E-04	2.6E+06	4.7E-04	2.1E+05	1.1E-03	9.1E+04
U-238	1.7E-04	3.0E+06	2.2E-04	2.3E+06	6.4E-04	1.6E+05	1.5E-03	6.5E+04
U-Nat.	2.5E-04	2.0E+06	4.4E-04	1.1E+06	2.0E-03	5.1E+04	5.3E-03	1.9E+04
Zn-65	9.2E-18	5.4E+19	0	-	1.6E-16	6.2E+17	2.0E-18	5.0E+19

TABLE 5-3

DOSE RATES AND CONCENTRATION LIMITS BY NUCLIDE
FOR EACH EXPOSURE SCENARIO

	H		N - T		M - S	
	Intruder Explorer Dose criterion = 25 mrem/yr		Off-Site Maximum Individual Dose criterion = 25 mrem/yr		On-Site Worker Dose criterion = 1250 mrem/qtr	
Nuclide	Dose Rate (mrem/yr pCi/g)	Allowable Concentration in Waste (pCi/g)	Dose Rate (mrem/yr pCi/g)	Allowable Concentration in Waste (pCi/g)	Dose Rate (mrem/yr pCi/g)	Allowable Concentration in Waste (pCi/g)
Am-241	8.7E-36	2.9E+36	1.6E-01	1.7E+02	2.2E+00	2.3E+03
Am-243	9.4E-25	2.7E+25	1.5E-01	1.7E+02	2.7E+00	1.9E+03
C-14	0	-	6.1E-07	4.1E+07	1.9E-06	2.6E+09
Cd-109	0	-	2.7E-06	9.3E+06	1.1E-01	4.5E+04
Cm-242	0	-	1.6E-04	1.6E+05	3.6E-03	1.[illegible]E+06
Cm-242*	7.1E-18	3.5E+18	1.6E-01	1.6E+02	6.1E-01	8.1E+03
Cm-243	3.1E-24	8.1E+24	2.4E-01	1.1E+02	3.3E+00	1.5E+03
Cm-243*	3.1E-24	8.1E+24	3.9E-01	6.5E+01	3.8E+00	1.3E+03
Cm-244	1.1E-18	2.2E+19	5.5E-02	4.5E+02	1.8E-01	2.7E+04
Cm-244*	1.1E-18	2.2E+19	2.1E-01	1.2E+02	6.8E-01	7.4E+03
Co-57	0	-	1.5E-01	1.7E+02	2.6E-01	1.9E+04
Co-60	1.9E-11	1.3E+12	3.0E+00	8.3E+00	1.4E+01	3.6E+02
Cs-134	1.1E-17	2.4E+18	2.3E+00	1.1E+01	4.2E+00	1.2E+03
Cs-137	2.9E-13	6.8E+13	9.0E-01	2.8E+01	8.9E+00	5.6E+02
Fe-55	0	-	1.5E-07	1.7E+08	2.8E-03	1.8E+06
H-3	0	-	1.1E-08	2.3E+09	3.5E-08	1.4E+11
I-129	7.8E-36	3.2E+36	5.2E-05	4.8E+05	1.5E+00	3.4E+03
Mn-54	2.1E-23	1.2E+24	1.1E+00	2.2E+01	8.9E-01	5.6E+03
Na-22	1.8E-13	1.6E+14	3.0E+00	8.4E+00	6.4E+00	7.8E+02
Nb-94	2.4E-11	1.0E+12	2.2E+00	1.1E+01	2.8E+01	1.8E+02
Ni-59	6.1E-37	4.1E+37	7.8E-07	3.2E+07	7.2E-02	6.9E+04
Ni-63	0	-	1.7E-06	1.5E+07	5.4E-06	9.3E+08
Np-237	9.5E-36	2.6E+36	1.5E-01	1.7E+02	2.3E+00	2.2E+03
Pu-238	4.6E-37	5.5E+37	1.2E-01	2.1E+02	4.7E-01	1.1E+04
Pu-238*	7.1E-18	3.5E+18	1.6E-01	1.6E+02	6.1E-01	8.2E+03
Pu-239	2.6E-37	9.5E+37	1.5E-01	1.7E+02	5.0E-01	9.9E+03
Pu-240	1.8E-28	1.4E+29	1.5E-01	1.7E+02	4.9E-01	1.0E+04
Pu-241	0	-	1.9E-03	1.3E+04	5.8E-03	8.6E+05
Pu-241*	1.8E-35	1.4E+36	2.9E-01	8.6E+01	4.5E+00	1.1E+03
Pu-242	3.5E-37	7.1E+37	1.4E-01	1.8E+02	4.9E-01	1.0E+04
Ra-226	8.3E-27	3.0E+27	1.1E-02	2.3E+03	2.8E-01	2.0E+04
Ra-226*	7.3E-09	3.4E+09	2.2E+00	1.1E+01	3.0E+01	1.7E+02
Ru-106	0	-	9.3E-06	2.7E+06	2.9E-05	1.7E+08
Ru-106*	1.3E-24	2.0E+25	3.1E-01	8.0E+01	2.6E-01	1.9E+04
Sn-113	0	-	7.9E-03	3.2E+03	8.8E-03	7.3E+05
Sr-90	0	-	3.0E-04	8.3E+04	9.1E-04	5.5E+06
Sr-90*	0	-	3.0E-04	8.3E+04	9.2E-04	5.4E+06
Tc-99	0	-	2.2E-06	1.1E+07	6.8E-06	7.3E+08
Th-230	1.0E-35	2.5E+36	9.3E-02	2.7E+02	3.3E-01	1.5E+04
Th-232	4.9E-37	5.1E+37	4.6E-01	5.4E+01	1.5E+00	3.3E+03
Th-232*	6.7E-08	3.7E+08	3.5E+00	7.1E+00	4.5E+01	1.1E+02
U-234	7.1E-18	3.5E+18	3.8E-02	6.6E+02	1.4E-01	3.7E+04
U-235	1.4E-26	1.8E+27	2.4E-01	1.1E+02	6.0E+00	8.4E+02
U-236	1.5E-37	1.7E+38	3.5E-02	7.1E+02	1.4E-01	3.6E+04
U-238	4.8E-37	5.2E+37	3.5E-02	7.1E+02	[illegible].8E-01	2.8E+04
U-Nat	3.6E-18	7.0E+18	3.7E-02	6.8E+02	2.8E-01	1.8E+04
Zn-65	2.3E-25	1.1E+26	7.3E-01	3.4E+01	4.4E-01	1.1E+04

TABLE 5-4

RADIONUCLIDE CONCENTRATION LIMITS

	All Scenarios Considered			Unrealistic Scenarios Excluded**		
Nuclide	Limiting Exposure Scenario	Concentration Limit (pCi/g)	Does Allowable Concentration Exceed DOT 2,000 pCi/g Limit?	Limiting Exposure Scenario	Concentration Limit (pCi/g)	Does Allowable Concentration Exceed DOT 2,000 pCi/g Limit?
Am-241	Offsite Individual	1.7E+02		Maximum worker	2.3E+02	
Am-243	Offsite Individual	1.7E+02		Maximum worker	1.7E+03	
C-14	Intruder Ag (1000)	1.5E+02		Maximum worker	2.4E+06	Yes
Cd-109	Maximum worker	4.6E+04	Yes	Maximum worker	4.6E+04	Yes
Cm-242	Offsite Individual	1.6E+05	Yes	Maximum worker	1.4E+06	Yes
Cm-242*	Offsite Individual	1.8E+02		Maximum worker	8.1E+03	Yes
Cm-243	Offsite Individual	1.1E+02		Maximum worker	1.5E+03	
Cm-243*	Offsite Individual	6.5E+01		Maximum worker	1.3E+03	
Cm-244	Offsite Individual	4.5E+02		Maximum worker	2.7E+04	Yes
Cm-244*	Offsite Individual	1.2E+02		Maximum worker	7.4E+03	Yes
Co-57	Offsite Individual	1.7E+02		Maximum worker	1.9E+04	Yes
Co-60	Offsite Individual	8.3E+00		Maximum worker	3.6E+02	
Cs-134	Offsite Individual	1.1E+01		Maximum worker	1.2E+03	
Cs-137	Offsite Individual	2.8E+01		Maximum worker	5.6E+02	
Fe-55	Maximum worker	1.8E+06	Yes	Maximum worker	1.8E+06	Yes
H-3	Offsite Individual	2.3E+09	Yes	Maximum worker	1.4E+11	Yes
I-129	Intruder Ag (1000)	2.5E+03	Yes	Maximum worker	3.1E+03	Yes
Mn-54	Offsite Individual	2.2E+01		Maximum worker	5.6E+03	Yes
Na-22	Offsite Individual	6.4E+00		Maximum worker	7.8E+02	
Nb-94	Offsite Individual	1.1E+01		Maximum worker	1.6E+02	
Ni-59	Maximum worker	6.9E+04	Yes	Maximum worker	6.9E+04	Yes
Ni-63	Offsite Individual	1.5E+07	Yes	Maximum worker	8.5E+08	Yes
Np-237	Offsite Individual	1.7E+02		Maximum worker	2.0E+03	Yes
Pu-238	Offsite Individual	2.1E+02		Maximum worker	1.1E+04	Yes
Pu-238*	Offsite Individual	1.6E+02		Maximum worker	8.2E+03	Yes
Pu-239	Offsite Individual	1.7E+02		Maximum worker	9.9E+03	Yes
Pu-240	Offsite Individual	1.7E+02		Maximum worker	1.0E+04	Yes
Pu-241	Offsite Individual	1.3E+04	Yes	Maximum worker	8.6E+05	Yes
Pu-241*	Offsite Individual	8.6E+01		Maximum worker	1.1E+03	
Pu-242	Offsite Individual	1.8E+02		Maximum worker	1.0E+04	Yes
Ra-226	Offsite Individual	2.3E+03	Yes	Maximum worker	1.8E+04	Yes
Ra-226*	Offsite Individual	1.1E+01		Maximum worker	1.5E+02	
Ru-106	Offsite Individual	2.7E+06	Yes	Maximum worker	1.7E+08	Yes
Ru-106*	Offsite Individual	8.0E+01		Maximum worker	1.9E+04	Yes
Sn-113	Offsite Individual	3.2E+03	Yes	Maximum worker	7.3E+05	Yes
Sr-90	Offsite Individual	8.3E+04	Yes	Maximum worker	5.5E+06	Yes
Sr-90*	Offsite Individual	8.3E+04	Yes	Maximum worker	5.4E+06	Yes
Tc-99	Intruder Ag (1000)	1.7E+01		Maximum worker	6.7E+08	Yes
Th-230	Offsite Individual	2.7E+02		Maximum worker	1.5E+04	Yes
Th-232	Offsite Individual	5.4E+01		Maximum worker	3.3E+03	Yes
Th-232*	Offsite Individual	7.1E+00		Maximum worker	1.0E+02	
U-234	Offsite Individual	6.6E+02		Maximum worker	3.7E+04	Yes
U-235	Offsite Individual	1.1E+02		Maximum worker	7.7E+02	
U-236	Offsite Individual	7.1E+02		Maximum worker	3.6E+04	Yes
U-238***	Offsite Individual	7.1E+02		Maximum worker	2.8E+04	Yes
U-Nat.	Offsite Individual	6.8E+02		Maximum worker	1.8E+04	Yes
Zn-65	Offsite Individual	3.4E+01		Maximum worker	1.1E+04	Yes

* Denotes dose rates generated by nuclide plus its significant daughters in equilibrium.

** Unrealistic scenarios are off-site individual and intruder-agriculture.

*** Appropriate for depleted uranium provided the waste form is similar to sandy or loamy soil.

concentration is determined by the on-site worker scenario, and for three nuclides the limiting concentration is determined by the intruder-agriculture scenario. As noted previously, neither the maximum off-site individual scenario nor the intruder-agriculture may be realistic for conditions at the Clive facility. If these scenarios are excluded, then the on-site worker scenario becomes the limiting scenario for all radionuclides. The corresponding radionuclide concentration limits increase by factors ranging from a few percent to several orders of magnitude. It should also be noted that even in the on-site worker exposure scenario different assumptions could reasonably be justified which might allow limiting concentrations to increase by factors of 2 to 10 times.

Some radionuclide concentrations exceed the 2,000 pCi/g limit used by the U.S. Department of Transportation (DOT) to determine if a waste shipment is considered radioactive material and should be labeled and placarded as radioactive material during transport. The suggested radionuclide concentration limits shown in Table 5-4 exceed the DOT 2,000 pCi/g limit for 14 radionuclides where all exposure scenarios are considered. For the remaining 34 entries in the table, the suggested radionuclide concentration limits are less than the DOT 2,000 pCi/g limit.

Section R447-25-19 of Utah licensing requirements for the land disposal of radioactive waste specifies that no member of the general population (exclusive of intruders for whom a different performance objective applies) shall experience annual doses exceeding 25 mrem to the whole body, 75 mrem to the thyroid, and 25 mrem to any other body organ. The concentration limits in Table 5-4 are based on effective whole-body equivalent doses. However, since I-129 may cause injury to the thyroid, the thyroid dose to the maximum exposed off-site individual was also examined to determine if it is limiting for this radionuclide. The maximum exposed off-site individual is estimated to receive an annual thyroid dose of 1.7E-03 mrem/yr based on an I-129 concentration of 1 pCi/g. The I-129 concentration that corresponds to the 75 mrem/yr thyroid dose limit is estimated to be 4.4E+04 pCi/g. This concentration is about one order of magnitude greater than the concentration limit shown in Table 5-4, which is based on the intruder-agriculture exposure scenario. Hence the general population thyroid dose limit does not result in the limiting I-129 concentration for Clive disposal.

5.4 COMPARISON WITH GENII RESULTS

To provide a check on the radionuclide concentration limits estimated using the PATHRAE model, doses and concentration limits for two exposure scenarios (including off-site individual) were also calculated using the GENII computer model.[24] The exposure scenarios for which GENII calculations were performed are the on-site worker and the maximally exposed off-site individual. Comparisons of PATHRAE and GENII radionuclide concentration limits for these exposure scenarios are presented in Table 5-5.

GENII was developed by Battelle-Pacific Northwest Laboratory to incorporate the ICRP dosimetry models in updated versions of the environmental pathways analysis models used at Hanford. The purpose of this model is to analyze acute and chronic exposures resulting from radionuclide releases to, or contamination of, air, water, and soil. While in many ways GENII is similar to PATHRAE, significant differences do exist. A description of the GENII model and a brief discussion of the similarities and differences between GENII and PATHRAE is given in Appendix C.

As shown in Table 5-5, radionuclide concentration limits based on exposures to the off-site individual generally differ by about two orders of magnitude when the results of the PATHRAE and GENII calculations are compared. In all cases, the limits calculated using PATHRAE are more restrictive.

The disparity in concentration limits based on exposures to the off-site individual is due, in part, to differences in the calculation of the atmospheric dispersion. PATHRAE is based on a slightly different formulation of the Gaussian plume model which uses a virtual point source approximation for area sources and calculates the vertical diffusion parameter using different coefficients. When the atmospheric dispersion parameter calculated by PATHRAE is input for use in GENII, the calculated concentration limits generally agree within a factor of about three.

TABLE 5-5

RADIONUCLIDE CONCENTRATION LIMITS CALCULATED USING PATHRAE AND GENII

	Radionuclide Concentration Limits			
	Off-Site Individual[a]		On-Site Worker[b]	
Nuclide	PATHRAE (pCi/g)	GENII (pCi/g)	PATHRAE (pCi/g)	GENII (pCi/g)
Am-241	1.7E+02	3.2E+04	2.3E+03	1.0E+04
Am-243	1.7E+02	6.5E+04	1.9E+03	1.0E+04
C-14	4.1E+07	1.4E+10	2.6E+09	9.2E+08
Cd-109	9.3E+06	2.5E+08	4.6E+04	3.8E+06
Cm-242	1.6E+02	1.8E+06	8.1E+03	3.0E+05
Cm-243	6.5E+01	9.2E+04	1.3E+03	1.1E+04
Cm-244	1.2E+02	1.2E+05	7.4E+03	1.9E+04
Co-57	2.1E+08[c]	3.2E+09	1.9E+04	4.4E+04
Co-60	1.7E+06[c]	1.4E+08	3.6E+02	1.2E+03
Cs-134	1.2E+07[c]	6.8E+08	1.2E+03	1.8E+03
Cs-137	3.4E+06[c]	1.0E+09	5.6E+02	5.6E+03
Fe-55	1.7E+08	2.3E+10	1.8E+06	1.0E+08
H-3	2.3E+09	3.2E+11	1.4E+11	5.2E+10
I-129	4.8E+05	1.8E+08	3.4E+03	1.9E+06
Mn-54	2.3E+08[c]	4.3E+09	5.6E+03	3.8E+03
Na-22	5.8E+07[c]	3.2E+09	7.8E+02	1.4E+03
Nb-94	2.6E+05[c]	7.2E+07	1.8E+02	2.1E+03
Ni-59	3.2E+07	3.5E+10	6.9E+04	8.4E+07
Ni-63	1.5E+07	1.4E+10	9.3E+08	2.2E+09
Np-237	1.7E+02	4.5E+04	2.2E+03	7.2E+03
Pu-238	1.6E+02	9.5E+04	8.2E+03	1.6E+04
Pu-239	1.7E+02	9.2E+04	9.9E+03	1.5E+04
Pu-240	1.7E+02	9.2E+04	1.0E+04	1.5E+04
Pu-241	8.6E+01	5.8E+06	1.1E+03	9.2E+05
Pu-242	1.8E+02	1.0E+05	1.0E+04	1.7E+04
Ra-226	3.0E+03[c]	3.5E+06	1.7E+02	3.8E+05
Ru-106	2.7E+06[c]	6.0E+07	1.9E+04	1.4E+04
Sn-113	4.2E+08[c]	2.8E+09	7.3E+05	7.2E+05
Sr-90	8.3E+04	1.4E+08	5.4E+06	1.3E+07
Tc-99	1.1E+07	3.0E+09	7.3E+08	1.6E+08
Th-230	2.7E+02	1.1E+05	1.5E+04	1.8E+04
Th-232	7.1E+00	9.5E+04	1.1E+02	4.0E+03
U-234	6.6E+02	2.1E+05	3.7E+04	3.3E+04
U-235	1.1E+02	2.3E+05	8.4E+02	2.1E+04
U-236	7.1E+02	2.3E+05	3.6E+04	3.6E+04
U-238	7.1E+02	2.3E+05	2.8E+04	3.8E+04
Zn-65	1.0E+08[c]	1.6E+09	1.1E+04	4.4E+03

a. Based on a dose criterion of 25 mrem/yr.

b. Based on a dose criterion of 1,250 mrem/qtr.

c. Does not include the direct gamma dose since GENII does not calculate this dose for the off-site individual.

Radionuclide concentration limits based on exposures to the on-site worker generally differ by factors of about 2 to 10 when the results of the PATHRAE and GENII calculations are compared. In most instances, the limits calculated by PATHRAE are more restrictive.

For the on-site worker, the exposure pathway that contributes most of the dose varies with radionuclide, and may be either inhalation or external gamma exposure. For some radionuclides, both exposure pathways contribute significantly to worker dose. Therefore, it is very difficult to generalize about the reasons for the different on-site worker doses calculated by PATHRAE and by GENII.

5.5 COMPARISON WITH 10 CFR 61 CLASS A LIMITS

Nuclear Regulatory Commission (NRC) licensing requirements for the land disposal of radioactive wastes are contained in Part 61 of Title 10 of the Code of Federal Regulations (10 CFR 61).[4] Wastes are classified for disposal into one of three classes depending on potential radiological hazard. Class A wastes are considered to present the least hazard and may be disposed of in a land disposal facility if they meet the minimum waste form requirements in 10 CFR 61.56(a). Concentration limits for Class A wastes are given in Table 1 of 10 CFR 61 for long-lived radionuclides and in Table 2 for short-lived radionuclides.

Table 5-6 provides a comparison of suggested radionuclide concentration limits in Clive facility wastes with concentration limits for Class A wastes in 10 CFR 61. For purposes of comparison, the concentration limits in Table 1 and Table 2 of 10 CFR 61 (specified in Ci/m^3) have been converted to pCi/g by assuming an average waste density of 1.6 g/cm^3 (100 lb/ft^3).

For those radionuclides for which comparisons can be made, the suggested limiting concentrations in Clive wastes are very much smaller (i.e., several orders of magnitude smaller) than the 10 CFR 61 Class A concentration limits for all but four radionuclides. For I-129 the limiting concentration for disposal at Clive is smaller by a factor of only 2.0. For H-3 (tritium), Ni-63, and Sr-90, the suggested limits are larger than the 10 CFR 61 class

TABLE 5-6

COMPARISON OF LIMITING RADIONUCLIDE CONCENTRATIONS IN CLIVE FACILITY WASTES WITH CLASS A WASTE CONCENTRATION LIMITS IN 10 CFR 61

Nuclide	Concentration Limits (pCi/g)	
	Clive Facility Wastes[a]	10 CFR 61 Class A Limits[b]
Am-241	1.7E+02	2.0E+06
Am-243	1.7E+02	2.0E+06
C-14	1.5E+02	5.0E+05
Cd-109	4.6E+04	—[c]
Cm-242[d]	1.6E+02	3.5E+05
Cm-243[d]	6.5E+01	2.0E+06
Cm-244[d]	1.2E+02	2.0E+06
Co-57	1.7E+02	—
Co-60	8.3E+00	4.4E+08
Cs-134	1.1E+01	—
Cs-137	2.8E+01	6.2E+05
Fe-55	1.8E+06	—
H-3	2.3E+09	2.5E+07
I-129	2.5E+03	5.0E+03
Mn-54	2.2E+01	—
Na-22	8.4E+00	—
Nb-94	1.1E+01	1.2E+04
Ni-59	6.9E+04	1.4E+07
Ni-63	1.5E+07	2.2E+06
Np-237	1.7E+02	2.0E+06
Pu-238[d]	1.6E+02	2.0E+06
Pu-239	1.7E+02	2.0E+06
Pu-240	1.7E+02	2.0E+06
Pu-241[d]	8.6E+01	1.0E+04
Pu-242	1.8E+02	2.0E+06
Ra-226[d]	1.1E+01	—
Ru-106[d]	8.0E+01	—
Sn-113	3.2E+03	—
Sr-90[d]	8.3E+04	2.5E+04
Tc-99	1.7E+01	1.9E+05
Th-230	2.7E+02	—
Th-232[d]	7.1E+00	—
U-234	6.6E+02	—
U-235	1.1E+02	—
U-236	7.1E+02	—
U-238	7.1E+02	—
Zn-65	3.4E+01	—

a. From Table 5-4, alll scenarios considered.

b. From Tables 1 and 2 of 10 CFR 61.55. Limits converted from Ci/m³ to pCi/g by assuming an average waste density of 1.6 g/cm³ (100 lb/ft³).

c. No concentration limit specified for Class A wastes.

d. Effects of daughters included.

concentration limit by factors of 92, 6.8 and 3.3, respectively. For alpha-emitting transuranic nuclides the suggested limiting concentrations in Clive wastes are about four orders of magnitude smaller than they are for Class A wastes. An additional Class A limit specified in 10 CFR 61 is that the total concentration of all radionuclides with less than a 5-year half-life must not exceed 4.4E+08 pCi/g. Since the sum of suggested concentration limits for the ten radionuclides with half-lives less than 5 years (Cd-109, Cm-242, Co-57, Cs-134, Fe-55, Ma-54, Na-22, Rn-106, Sn-113, and Zn-65) is less than 2.0E+06 pCi/g, this constraint is satisfied.

6. IMPLEMENTATION CONSIDERATIONS

This chapter presents suggestions on license conditions that might be imposed and how operations might be structured to assure that the concentration limits summarized in Table 5-4 are not exceeded.

6.1 ASSURING COMPLIANCE WITH CONCENTRATION LIMITS

The methodology used to obtain the radionuclide concentration limits presented in Chapter 5 assumes that the radionuclides are uniformly dispersed in the waste. The concentration limits that are derived using this methodology are annual averages over the entire volume of waste disposed at the facility. These concentration limits can be implemented by applying them to individual shipping vehicles (e.g., individual trucks or rail cars), to entire shipments (e.g., a trainload of waste comprising several rail cars), or to all of the waste shipped to the site by a particular generator during a year.

The most conservative and straightforward approach is to apply these limits to each individual shipping vehicle bringing waste to the disposal facility. Since many, and perhaps most, of the vehicles would contain waste with nuclide concentrations well below the concentration limits, this approach should generally yield annual average concentrations at the disposal facility that are one or two orders of magnitude less than the concentration limits presented in Chapter 5.

A less restrictive but still conservative approach is to apply the concentration limits to an entire shipment. This approach would require that a sampling program to sample individual shipping vehicles or waste containers be devised and placed in operation to ensure that the entire shipment complies with the applicable radionuclide concentration limits.

Although it might be possible to require each waste generator shipping waste for disposal at the Clive facility is to conform to the concentration limits on an annual basis. This approach is less conservative still, and leaves the disposal site operator with a reduced ability to control compliance with license conditions. Furthermore, this approach could result in some shipments being received at the site with very high radionuclide concentrations that could pose waste handling and exposure problems to on-site workers during disposal operations. This approach would require that each waste generator provide projections of total volumes and curies of waste before beginning the waste shipments and that each generator maintain auditable records of the quantities and nuclide concentrations in each shipment. A conservative way of implementing the annual limit approach would be to restrict each generator to a total annual curie limit equal to some fraction (i.e., one-tenth) of the curie limit obtained by multiplying the generator's projected waste volume by the applicable radionuclide concentration limit.

Implementation of radionuclide concentration limits at the Clive Facility will require that the site operator have in place specific procedures for inspecting and sampling incoming shipments to determine weights, volumes, and radionuclide concentrations. Records will need to be maintained of each incoming shipment and of the total quantity of waste disposed on an annual basis. The sampling procedures and records should be subject to periodic audit by the Bureau of Radiation Control or other appropriate state agency.

Procedures should be put in place by the site operator that would include:

- Sampling techniques
- Measurement techniques
- Compliance determination
- Actions in case of non-compliance
- Waste handling procedures
- Recordkeeping

The sampling requirements should address representative sampling, the number of samples to be obtained for a particular waste shipment, sample size, and the sampling

method to be used. Measurement procedures should include requirements for calibrating the measurements system, count times required to meet specified detection limits, and steps to determine average nuclide concentrations in the samples and to sum the nuclide concentrations to determine average total sample activities.

Compliance determination procedures will require that the volume and mass of waste to be disposed be determined for each shipment. Based on the total mass and average activity per sample, the total activity contained in the shipment can be determined. Procedures should be developed specifying actions to be taken in the event of non-compliance of a shipment with specified radionuclide concentration limits. Waste handling procedures should include health physics requirements for the protection of on-site operating personnel as well as procedures for placing the waste in the disposal cell, compacting it, and identifying its location.

A records file must be maintained by the disposal facility operator that includes information about each shipment received and about the total quantity of waste disposed at the facility. Information to be provided for each shipment should include:

- Date of receipt of shipment.
- Waste identification.
- Waste sampling results.
- Average radionuclide concentrations in the waste.
- Waste volume and waste mass.
- Location of the waste in the disposal cell.

Information about the total quantity of waste disposed at the facility should include:

- Year-to-date waste mass received.
- Year-to-date waste volume received.
- Year-to-date radioactivity received.

6.2 SUM OF FRACTIONS RULE

The limiting concentrations in Chapter 5 are for individual radionuclides in the waste. For a waste shipment containing mixtures of radionuclides the allowable total concentration would be determined by the sum-of-fractions rule. The sum of fractions is determined by dividing each nuclide's actual concentration in the waste by the appropriate nuclide concentration limit and adding the resulting fractions of all nuclides. The sum of these fractions must be less than or equal to one for the waste to be acceptable. The sum-of-fractions rule may be stated as:

$$\sum_{i=1}^{N} \frac{C_i}{L_i} = \frac{C_1}{L_1} + \frac{C_2}{L_2} + \ldots + \frac{C_N}{L_N} \leq 1$$

where

C_i = Average concentration of the ith nuclide in the waste.

L_i = Concentration limit for the ith nuclide.

N = The number of nuclides in the mixture.

Since doses scale with concentration, limiting the sum of fractions to a value less than or equal to unity assures that doses during or after operations will not exceed the applicable criteria.

6.3 WASTE FORM RESTRICTIONS

The results presented in this document are based on analyses which assume the waste to be contaminated soil or construction debris. As such, the soil was taken to be sand or sandy loam. If waste is received which is substantially more finely divided, and therefore

more disbursable, additional limitations in concentration or handling procedures may be appropriate in order to assure adequate protection.

6.4 SURFACE-CONTAMINATED MATERIAL

Wastes proposed for disposal at the Clive facility include contaminated soil and contaminated construction debris. Most of this waste will have radionuclides dispersed more-or-less uniformly throughout the material. Some construction debris, such as wood, concrete blocks, and concrete slabs may have only surface contamination. The amount of material with surface contamination is anticipated to be a small fraction of the total waste material disposed at the Clive facility.

Disposal operations that involve layering the waste and compacting it will tend to break up this material and mix it with other waste disposed at the facility. Persons who may be exposed after the waste is in place and off-site individuals will experience exposures from waste that is more-or-less uniformly contaminated with radionuclides.

Onsite workers are the only persons for whom radiation exposures may be dependent on whether the radioactive contamination is on the surface or dispersed throughout the waste. These individuals are badged radiation workers who carry dosimeters and who have had training in health physics procedures. The radiation doses received by these individuals are monitored on a regular basis. The wearing of protective clothing and gloves should prevent body contact with surface contamination. Therefore, it is concluded that it is not necessary to impose a license condition on the receipt of surface contaminated material which is different from that imposed on material for which the radionuclides are dispersed throughout the waste.

7. SUMMARY

Considering only the potential impacts to members of the general public, inadvertent intruders onto (or into) the site, and workers at the site, radionuclide concentrations were determined which would limit effective whole-body dose equivalents to applicable l vels as defined by current regulations and policies. With four exceptions, these limits are several orders of magnitude smaller than the respective 10 CFR 61 Class A concentration limit. For I-129, the suggested limit i. smaller than the Class A concentration limit by a factor of only 2.0. For H-3 (tritium), Ni-63, and Sr-90, the suggested limits are larger than the Class A concentration limits by factors of 92, 6.8, and 3.3, respectively.

The implementation of these results would require a combination of procedures to assure the concentrations are not exceeded and potential doses are limited to acceptable levels. These include sampling, waste handling, and recordkeeping procedures. For mixtures of radionuclides the sum-of-fractions rule should apply. If the waste is substantially more disbursable than normal soil, additional restrictions should apply.

APPENDIX A

NUCLIDE-SPECIFIC PARAMETER VALUES

APPENDIX A
NUCLIDE-SPECIFIC PARAMETER VALUES

The nuclide-dependent parameter values used in this risk assessment of waste disposal at the Clive facility are presented in this appendix.

TABLE A-1

AVERAGE GAMMA ENERGIES AND GAMMA ATTENUATION FACTORS
(Source: Reference 25)*

Nuclide	Gamma Energy (MeV)	Gamma Attenuation (1/m)	Half-Life (yr)	
Ac-228	1.00E+00	1.00E+01	1.40E+10	*
Am-241	3.40E-02	5.00E+01	4.32E+02	
Am-243	1.50E-01	2.20E+01	7.38E+03	
Ba-137m	6.60E-01	1.20E+01	3.02E+01	
Bi-210	0.00	0.00	1.60E+03	**
Bi-212	8.20E-01	1.10E+01	1.40E+10	*
Bi-214	1.10E+00	9.20E+00	1.60E+03	**
C-14	0.00	0.00	5.73E+03	
Cd-109	1.10E-02	5.00E+01	1.27E+00	
Cm 242	1.40E-02	5.00E+01	4.47E-01	
Cm-243	2.20E-01	2.00E+01	2.85E+01	
Cm 244	5.00E-01	1.40E+01	1.81E+01	
Co-57	1.20E-01	2.50E+01	7.42E-01	
Co-60	1.25E+00	9.20E+00	5.27E+00	
Cs-134	7.00E-01	1.20E+01	2.06E+00	
Cs-137	0.00	0.00	3.02E+01	
Fe-55	3.00E-02	5.00E+01	2.70E+00	
H-3	0.00	0.00	1.23E+01	
I-129	2.90E-02	5.00E+01	1.57E+07	
Mn-54	8.30E-01	1.10E+01	8.56E-01	
Na-22	1.27E+00	2.20E+00	2.60E+00	
Nb-94	7.87E-01	1.10E+01	2.03E+04	
Ni-59	7.00E-03	5.00E+01	7.50E+04	
Ni-63	0.00	0.00	1.00E+02	
Np-237	3.50E-02	5.00E+01	2.14E+06	
Pb-210	5.00E-02	5.00E+01	1.60E+03	**
Pb-212	2.50E-01	1.90E+01	1.40E+10	*
Pb-214	5.00E-01	1.40E+01	1.60E+03	**
Po-210	8.00E-01	1.10E+01	1.60E+03	**
Po-212	0.00	0.00	1.40E+10	*
Po-214	8.00E-01	1.10E+01	1.60E+03	**
Po-216	0.00	0.00	1.40E+10	*
Po-218	0.00	0.00	1.60E+03	**
Pu-238	1.40E-02	5.00E+01	8.78E+01	

AVERAGE GAMMA ENERGIES AND GAMMA ATTENUATION FACTORS
(Source: Reference 25)[a]

Nuclide	Gamma Energy (MeV)	Gamma Attenuation (1/m)	Half-Life (yr)	
Pu-239	1.50E-02	5.00E+01	2.41E+04	
Pu-240	1.60E-01	2.20E+01	6.54E+03	
Pu-241	0.00	0.00	1.44E+01	
Pu-242	2.00E-02	5.00E+01	3.76E+05	
Ra-224	2.40E-01	1.90E+01	1.40E+10	*
Ra-226	1.43E-01	2.30E+01	1.60E+03	**
Ra-228	3.00E-02	5.00E+01	1.40E+10	*
Rh-106	6.50E-01	1.30E+01	1.01E+00	
Rn-220	5.50E-01	1.30E+01	1.40E+10	*
Rn-222	5.10E-01	1.40E+01	1.60E+03	**
Ru-106	0.00	0.00	1.01E+00	
Sn-113	3.90E-01	1.60E+01	3.15E-01	
Sr-90	0.00	0.00	2.86E+01	
Tc-99	0.00	0.00	2.13E+05	
Th-228	1.50E-01	2.20E+01	1.40E+10	*
Th-230	8.40E-02	3.00E+01	7.70E+04	
Th-232	1.40E-02	5.00E+01	1.40E+10	*
Tl-208	1.50E+00	8.30E+00	1.40E+10	*
U-234	4.00E-01	1.50E+01	2.44E+05	
U-235	1.29E-01	2.40E+01	7.04E+08	
U-236	5.00E-02	5.00E+01	2.34E+07	
U-238	1.40E-02	5.00E+01	4.47E+09	
Y-90	0.00	0.00	2.86E+01	
Zn-65	1.10E+00	9.80E+00	6.69E-01	

a. The gamma energies in the second column are weighted averages of the gamma energies in Reference 25. Gamma attenuation coefficients are calculated for these average gamma energies.

* Members of the Th-232 decay chain, half-lives have been set equal to the parent nuclide.

** Members of the Ra-226 decay chain, half-lives have been set equal to the parent nuclide.

TABLE A-2

LEACH RATES AND SOLUBILITIES
(Source: Reference 26)

Nuclide	Input Leach Rate (1/yr)	Final Leach Rate (1/yr)	Solubility (mole/l)
Ac-228	8.32E-07	8.32E-07	0.00
Am-241	8.32E-07	8.32E-07	1.00E-01
Am-243	8.32E-07	8.32E-07	1.00E-01
Ba-137m	1.67E-07	1.67E-07	0.00
Bi-210	8.32E-07	8.32E-07	0.00
Bi-212	8.32E-07	8.32E-07	0.00
Bi-214	8.32E-07	8.32E-07	0.00
C-14	4.22E-04	4.22E-04	0.00
Cd-109	1.35E-05	1.35E-05	0.00
Cm-242	2.78E-08	2.78E-08	1.00E-14
Cm-243	2.78E-08	2.78E-08	1.00E-14
Cm-244	2.78E-08	2.78E-08	1.00E-14
Co-57	8.18E-06	8.18E-06	1.00E-02
Co-60	8.18E-06	8.18E-06	1.00E-02
Cs-134	1.67E-07	1.67E-07	0.00
Cs-137	1.67E-07	1.67E-07	0.00
Fe--55	1.61E-05	1.61E-05	0.00
H-3	4.42E-04	4.42E-04	0.00
I-129	2.15E-04	2.15E-04	1.00E-02
Mn-54	1.61E-05	1.61E-05	0.00
Na-22	4.42E-04	4.42E-04	0.00
Nb-94	2.78E-07	2.78E-07	0.00
Ni-59	8.32E-07	8.32E-07	1.00E-02
Ni-63	8.32E-07	8.32E-07	1.00E-02
Np-237	8.18E-06	8.18E-06	1.00E+01
Pb-210	8.32E-07	8.32E-07	0.00
Pb-212	8.32E-07	8.32E-07	0.00
Pb-214	8.32E-07	8.32E-07	0.00
Po-210	2.08E-07	2.08E-07	0.00
Po-212	2.08E-07	2.08E-07	0.00
Po-214	2.08E-07	2.08E-07	0.00
Po-216	2.08E-07	2.08E-07	0.00
Po-218	2.08E-07	2.08E-07	0.00
Pu-238	8.32E-07	8.32E-07	1.00E-13
Pu-239	8.32E-07	1.24E-07	1.00E-13

TABLE A-2

LEACH RATES AND SOLUBILITIES
(Source: Reference 26)

Nuclide	Input Leach Rate (1/yr)	Final Leach Rate (1/yr)	Solubility (mole/l)
Pu-240	8.32E-07	4.56E-07	1.00E-13
Pu-241	8.32E-07	8.32E-07	1.00E-13
Pu-242	8.32E-07	7.93E-09	1.00E-13
Ra-224	8.32E-07	2.13E-08	1.00E-08
Ra-226	8.32E-07	8.32E-07	1.00E-08
Ra-228	8.32E-07	2.13E-08	1.00E-08
Rh-106	5.20E-07	5.20E-07	1.00E-10
Rn-220	0.00	0.00	0.00
Rn-222	0.00	0.00	0.00
Ru-106	5.20E-07	5.20E-07	1.00E-10
Sn-113	8.32E-07	8.32E-07	0.00
Sr-90	1.02E-05	1.02E-05	0.00
Tc-99	4.42E-04	4.42E-04	0.00
Th-228	8.32E-07	8.32E-07	1.00E-04
Th-230	8.32E-07	8.32E-07	1.00E-04
Th-232	8.32E-07	8.32E-07	1.00E-04
Tl-208	8.32E-07	8.32E-07	0.00
U-234	2.07E-06	2.07E-06	0.00
U-235	2.07E-06	2.07E-06	0.00
U-236	2.07E-06	2.07E-06	0.00
U-238	2.07E-06	2.07E-06	0.00
Y-90	1.02E-05	1.02E-05	0.00
Zn-65	5.49E-06	5.49E-06	1.00E-12

TABLE A-3

SORPTION AND RETARDATION FACTORS
(Source: Reference 26)

Nuclide	Aquifer Sorption	Aquifer Retardation	Vertical Sorption	Vertical Retardation
Ac-228	1.00E+02	8.01E+02	1.00E+02	3.35E+03
Am-241	9.90E+01	7.93E+02	9.90E+01	3.32E+03
Am-243	9.90E+01	7.93E+02	9.90E+01	3.32E+03
Ba-137m	5.00E+02	4.00E+03	5.00E+02	1.68E+04
Bi-210	1.00E+02	8.01E+02	1.00E+02	3.35E+03
Bi-212	1.00E+02	8.01E+02	1.00E+02	3.35E+03
Bi-214	1.00E+02	8.01E+02	1.00E+02	3.35E+03
C-14	1.00E-02	1.08E+00	1.00E-02	1.34E+00
Cd-109	6.00E+00	4.90E+01	6.00E+00	2.02E+02
Cm-242	3.00E+03	2.40E+04	3.00E+03	1.01E+05
Cm-243	3.00E+03	2.40E+04	3.00E+03	1.01E+05
Cm-244	3.00E+03	2.40E+04	3.00E+03	1.01E+05
Co-57	1.00E+01	8.10E+01	1.00E+01	3.36E+02
Co-60	1.00E+01	8.10E+01	1.00E+01	3.36E+02
Cs-134	5.00E+02	4.00E+03	5.00E+02	1.68E+04
Cs-137	5.00E+02	4.00E+03	5.00E+02	1.68E+04
Fe-55	5.00E+00	4.10E+01	5.00E+00	1.69E+02
H-3	1.00E-03	1.01E+00	1.00E-03	1.03E+00
I-129	2.00E-01	2.60E+00	2.00E-01	7.70E+00
Mn-54	5.00E+00	4.10E+01	5.00E+00	1.69E+02
Na-22	1.00E-03	1.01E+00	1.00E-03	1.03E+00
Nb-94	3.00E+02	2.40E+03	3.00E+02	1.01E+04
Ni-59	1.00E+02	8.01E+02	1.00E+02	3.35E+03
Ni-63	1.00E+02	8.01E+02	1.00E+02	3.35E+03
Np-237	1.00E+01	8.10E+01	1.00E+01	3.36E+02
Pb-210	1.00E+02	8.01E+02	1.00E+02	3.35E+03
Pb-212	1.00E+02	8.01E+02	1.00E+02	3.35E+03
Pb-214	1.00E+02	8.01E+02	1.00E+02	3.35E+03
Po-210	4.00E+02	3.20E+03	4.00E+02	1.34E+04
Po-212	4.00E+02	3.20E+03	4.00E+02	1.34E+04
Po-214	4.00E+02	3.20E+03	4.00E+02	1.34E+04
Po-216	4.00E+02	3.20E+03	4.00E+02	1.34E+04
Po-218	4.00E+02	3.20E+03	4.00E+02	1.34E+04
Pu-238	1.00E+02	8.01E+02	1.00E+02	3.35E+03
Pu-239	1.00E+02	8.01E+02	1.00E+02	3.35E+03

SORPTION AND RETARDATION FACTORS
(Source: Reference 26)

Nuclide	Aquifer Sorption	Aquifer Retardation	Vertical Sorption	Vertical Retardation
Pu-240	1.00E+02	8.01E+02	1.00E+02	3.35E+03
Pu-241	1.00E+02	8.01E+02	1.00E+02	3.35E+03
Pu-242	1.00E+02	8.01E+02	1.00E+02	3.35E+03
Ra-224	9.80E+01	7.85E+02	9.80E+01	3.29E+03
Ra-226	9.80E+01	7.85E+02	9.80E+01	3.29E+03
Ra-228	9.80E+01	7.85E+02	9.80E+01	3.29E+03
Rh-106	1.60E+02	1.28E+03	1.60E+02	5.36E+03
Rn-220	0.00	1.00E+00	0.00	1.00E+00
Rn-222	0.00	1.00E+00	0.00	1.00E+00
Ru-106	1.60E+02	1.28E+03	1.60E+02	5.36E+03
Sn-113	1.00E+02	8.01E+02	1.00E+02	3.35E+03
Sr-90	8.00E+00	6.50E+01	8.00E+00	2.69E+02
Tc-99	1.00E-03	1.01E+00	1.00E-03	1.03E+00
Th-228	1.05E+02	8.41E+02	1.05E+02	3.52E+03
Th-230	1.05E+02	8.41E+02	1.05E+02	3.52E+03
Th-232	1.05E+02	8.41E+02	1.05E+02	3.52E+03
Tl-208	1.01E+02	8.09E+02	1.01E+02	3.39E+03
U-234	3.90E+01	3.13E+02	3.90E+01	1.31E+03
U-235	4.00E+01	3.21E+02	4.00E+01	1.34E+03
U-236	4.00E+01	3.21E+02	4.00E+01	1.34E+03
U-238	4.00E+01	3.21E+02	4.00E+01	1.34E+03
Y-90	8.00E+00	6.50E+01	8.00E+00	2.69E+02
Zn-65	1.50E+01	1.21E+02	1.50E+01	5.04E+02

TABLE A-4

BIOACCUMULATION FACTORS
(Source: Reference 27)

Nuclide	Soil-Plant Bv	Soil-Plant Br	Forage-Milk Fm (d/l)	Forage-Meat Ff (d/kg)
Ac-228	2.50E-03	2.50E-04	5.00E-06	6.00E-02
Am-241	2.50E-04	2.50E-05	5.00E-06	2.00E-04
Am-243	2.50E-04	2.50E-05	5.00E-06	2.00E-04
Ba-137m	5.00E-03	5.00E-04	4.00E-04	3.20E-03
Bi-210	1.50E-01	1.50E-02	5.00E-04	1.30E-02
Bi-212	1.50E-01	1.50E-02	5.00E-04	1.30E-02
Bi-214	1.50E-01	1.50E-02	5.00E-04	1.30E-02
C-14	5.50E+00	5.50E-01	1.20E-02	3.10E-02
Cd-109	3.00E-01	3.00E-02	1.20E-04	5.30E-04
Cm-242	2.50E-03	2.50E-04	5.00E-06	2.00E-04
Cm-243	2.50E-03	2.50E-04	5.00E-06	2.00E-04
Cm-244	2.50E-03	2.50E-04	5.00E-06	2.00E-04
Co-57	9.40E-03	9.40E-04	1.00E-03	1.30E-02
Co-60	9.40E-03	9.40E-04	1.00E-03	1.30E-02
Cs-134	1.00E-02	1.00E-03	1.20E-02	4.00E-03
Cs-137	1.00E-02	1.00E-03	1.20E-02	4.00E-03
Fe-55	6.60E-04	6.60E-05	1.20E-03	4.00E-02
H-3	4.80E+00	4.80E-01	1.00E-02	1.20E-02
I-129	2.00E-02	2.00E-03	6.00E-03	2.90E-03
Mn-54	2.90E-02	2.90E-03	2.50E-04	8.00E-04
Na-22	5.20E-02	5.20E-03	4.00E-02	3.00E-02
Nb-94	9.40E-03	9.40E-04	2.50E-03	2.80E-01
Ni-59	1.90E-02	1.90E-03	6.70E-03	5.30E-03
Ni-63	1.90E-02	1.90E-03	6.70E-03	5.30E-03
Np-237	2.50E-03	2.50E-04	5.00E-06	2.00E-04
Pb-210	6.80E-02	6.80E-03	6.20E-04	2.90E-04
Pb-212	6.80E-02	6.80E-03	6.20E-04	2.90E-04
Pb-214	6.80E-02	6.80E-03	6.20E-04	2.90E-04
Po-210	1.50E-01	1.50E-02	3.00E-04	1.20E-02
Po-212	1.50E-01	1.50E-02	3.00E-04	1.20E-02
Po-214	1.50E-01	1.50E-02	3.00E-04	1.20E-02
Po-216	1.50E-01	1.50E-02	3.00E-04	1.20E-02
Po-218	1.50E-01	1.50E-02	3.00E-04	1.20E-02
Pu-238	2.50E-04	2.50E-05	2.00E-06	1.40E-05
Pu-239	2.50E-04	2.50E-05	2.00E-06	1.40E-05

TABLE A-4

BIOACCUMULATION FACTORS
(Source: Reference 27)

Nuclide	Soil-Plant Bv	Soil-Plant Br	Forage-Milk F_m (d/l)	Forage-Meat Ff (d/kg)
Pu-240	2.50E-04	2.50E-05	2.00E-06	1.40E-05
Pu-241	2.50E-04	2.50E-05	2.00E-06	1.40E-05
Pu-242	2.50E-04	2.50E-05	2.00E-06	1.40E-05
Ra-224	3.10E-04	3.10E-05	8.00E-03	3.40E-02
Ra-226	3.10E-04	3.10E-05	8.00E-03	3.40E-02
Ra-228	3.10E-04	3.10E-05	8.00E-03	3.40E-02
Rh-106	1.30E+01	1.30E+00	1.00E-02	1.50E-03
Rn-220	3.50E+00	3.50E-01	2.00E-02	2.00E-02
Rn-222	3.50E+00	3.50E-01	2.00E-02	2.00E-02
Ru-106	5.00E-02	5.00E-03	1.00E-06	4.00E-01
Sn-113	2.50E-03	2.50E-04	2.50E-03	8.00E-02
Sr-90	1.70E-02	1.70E-03	8.00E-04	6.00E-04
Tc-99	2.50E-01	2.50E-02	2.50E-02	4.00E-01
Th-228	4.20E-03	4.20E-04	5.00E-06	2.00E-04
Th-230	4.20E-03	4.20E-04	5.00E-06	2.00E-04
Th-232	4.20E-03	4.20E-04	5.00E-06	2.00E-04
Tl-208	2.50E-01	2.50E-02	2.20E-02	4.00E-02
U-234	2.50E-03	2.50E-04	5.00E-04	3.40E-04
U-235	2.50E-03	2.50E-04	5.00E-04	3.40E-04
U-236	2.50E-03	2.50E-04	5.00E-04	3.40E-04
U-238	2.50E-03	2.50E-04	5.00E-04	3.40E-04
Y-90	2.60E-03	2.60E-04	1.00E-05	4.60E-03
Zn-65	4.00E-01	4.00E-02	3.90E-02	3.00E-02

TABLE A-5

TOTAL EQUIVALENT UPTAKE FACTORS
(Source: Reference 28)*

Nuclide	River (l/yr)	Well (l/yr)	Erosion (l/yr)	Bathtub (l/yr)	Spillage (l/yr)	Food (kg/yr)
Ac-225	1.34E+03	1.17E+03	1.34E+03	1.17E+03	1.36E+03	1.88E-01
Am-241	6.38E+02	4.66E+02	6.38E+02	4.66E+02	6.38E+02	1.18E-03
Am-243	6.38E+02	4.66E+02	6.38E+02	4.66E+02	6.38E+02	1.18E-03
Ba-137m	5.35E+02	5.07E+02	5.35E+02	5.07E+02	5.35E+02	4.43E-02
Bi-210	7.28E+02	6.24E+02	7.28E+02	7.28E+02	9.45E+02	3.09E+00
Bi-212	7.28E+02	6.24E+02	7.28E+02	6.24E+02	9.97E+02	3.09E+00
Bi-214	7.28E+02	6.24E+02	7.28E+02	7.28E+02	9.45E+02	3.09E+00
C-14	3.23E+04	5.82E+02	3.23E+04	5.82E+02	3.23E+04	0.00
Cd-109	1.84E+03	4.65E+02	1.84E+03	4.65E+02	1.84E+03	1.49E+00
Cm-242	6.20E+02	4.49E+02	6.20E+02	4.49E+02	6.20E+02	9.85E-03
Cm-243	6.38E+02	4.65E+02	6.38E+02	4.65E+02	6.38E+02	1.18E-02
Cm-244	6.38E+02	4.65E+02	6.38E+02	4.65E+02	6.38E+02	1.18E-02
Co-57	9.54E+02	6.11E+02	9.54E+02	6.11E+02	9.54E+02	1.81E-01
Co-60	9.74E+02	6.29E+02	9.74E+02	6.29E+02	9.74E+02	1.98E-01
Cs-134	1.45E+04	7.02E+02	1.45E+04	7.02E+02	1.45E+04	2.71E-01
Cs-137	1.45E+04	7.08E+02	1.45E+04	7.08E+02	1.45E+04	2.78E-01
Fe-55	1.63E+03	9.40E+02	1.63E+03	9.40E+02	1.63E+03	3.43E-02
H-3	8.05E+02	7.99E+02	8.05E+02	7.99E+02	8.05E+02	0.00
I-129	7.00E+02	5.97E+02	7.00E+02	5.97E+02	7.15E+02	3.45E-01
Mn-54	3.22E+03	4.67E+02	3.22E+03	4.67E+02	3.22E+03	1.54E-01
Na-22	2.15E+03	1.46E+03	2.15E+03	1.46E+03	2.15E+03	5.19E+00
Nb-94	2.11E+05	3.79E+03	2.11E+05	3.79E+03	2.11E+05	3.19E+00
Ni-59	1.33E+03	6.36E+02	1.33E+03	6.36E+02	1.36E+03	4.02E-01
Ni-63	1.33E+03	6.36E+02	1.33E+03	6.36E+02	1.33E+03	4.02E-01
Np-237	5.35E+02	4.66E+02	5.35E+02	4.66E+02	5.36E+02	1.18E-02
Pb-210	1.17E+03	4.77E+02	1.17E+03	1.17E+03	1.19E+03	3.94E-01
Pb-212	1.17E+03	4.77E+02	1.17E+03	4.77E+02	1.20E+03	3.94E-01
Pb-214	1.17E+03	4.77E+02	1.17E+03	1.17E+03	1.19E+03	3.94E-01
Po-210	4.06E+03	6.09E+02	4.06E+03	4.06E+03	4.26E+03	2.87E+00
Po-212	4.06E+03	6.09E+02	4.06E+03	6.09E+02	4.31E+03	2.87E+00
Po-214	4.06E+03	6.09E+02	4.06E+03	4.06E+03	4.26E+03	2.87E+00

TABLE A-5

TOTAL EQUIVALENT UPTAKE FACTORS
(Source: Reference 28)[a]

Nuclide	River (l/yr)	Well (l/yr)	Erosion (l/yr)	Bathtub (l/yr)	Spillage (l/yr)	Food (kg/yr)
Po-216	4.06E+03	6.09E+02	4.06E+03	6.09E+02	4.31E+03	2.87E+00
Po-218	4.06E+03	6.09E+02	4.06E+03	4.06E+03	4.26E+03	2.87E+00
Pu-238	4.87E+02	4.63E+02	4.87E+02	4.63E+02	4.87E+02	1.12E-03
Pu-239	4.87E+02	4.63E+02	4.87E+02	4.63E+02	4.88E+02	1.13E-03
Pu-240	4.87E+02	4.63E+02	4.87E+02	4.63E+02	4.88E+02	1.13E-03
Pu-241	4.87E+02	4.63E+02	4.87E+02	4.63E+02	4.87E+02	1.12E-03
Pu-242	4.87E+02	4.63E+02	4.87E+02	4.63E+02	4.88E+02	1.13E-03
Ra-224	1.34E+03	9.94E+02	1.34E+03	9.94E+02	1.34E+03	1.77E-02
Ra-226	1.34E+03	9.94E+02	1.34E+03	1.34E+03	1.34E+03	1.77E-02
Ra-228	1.34E+03	9.94E+02	1.34E+03	9.94E+02	1.34E+03	1.77E-02
Rh-106	7.24E+02	6.55E+02	7.24E+02	6.55E+02	7.04E+02	2.68E+02
Rn-220	1.06E+03	1.05E+03	1.06E+03	1.05E+03	6.86E+03	2.07E+02
Rn-222	1.06E+03	1.05E+03	1.06E+03	1.06E+03	5.88E+03	2.07E+02
Ru-106	4.98E+03	4.91E+03	4.98E+03	4.91E+03	4.97E+03	2.26E+01
Sn-113	2.17E+04	1.27E+03	2.17E+04	1.27E+03	2.17E+04	2.03E-01
Sr-90	6.90E+02	4.83E+02	6.90E+02	4.83E+02	6.90E+02	1.09E-01
Tc-99	5.69E+03	6.89E+03	5.69E+03	5.58E+03	9.30E+03	1.29E+02
Th-228	6.73E+02	4.66E+02	6.73E+02	4.66E+02	6.74E+02	1.98E-02
Th-230	6.73E+02	4.66E+02	6.73E+02	4.66E+02	6.74E+02	1.96E-02
Th-232	6.73E+02	4.66E+02	6.73E+02	4.66E+02	6.74E+02	1.98E-02
Tl-208	7.03E+04	1.30E+03	7.03E+04	1.30E+03	7.22E+04	2.15E+01
U-234	4.89E+02	4.75E+02	4.89E+02	4.75E+02	4.90E+02	1.42E-02
U-235	4.89E+02	4.75E+02	4.89E+02	4.75E+02	4.90E+02	1.42E-02
U-236	4.89E+02	4.75E+02	4.89E+02	4.75E+02	4.90E+02	1.42E-02
U-238	4.89E+02	4.75E+02	4.89E+02	4.75E+02	4.90E+02	1.42E-02
Y-90	6.89E+02	5.17E+02	6.89E+02	5.17E+02	6.89E+02	2.57E-02
Zn-65	1.51E+04	1.41E+03	1.51E+04	1.41E+03	1.51E+04	3.68E-01

a. Calculated from bioupitake and food and water ingestion rates presented in Reference 28

TABLE A-6

DOSE CONVERSION FACTORS
(Source: References 28 and 29)

Nuclide	Ingestion Dose Factors (mrem/pCi)	Inhalation Dose Factors (mrem/pCi)	Direct Gamma Dose Factors (mrem-m²/pCi-yr)
Ac-228	2.10E-06	2.90E-04	9.10E-05
Am-241	4.50E-03	5.20E-01	3.00E-06
Am-243	4.50E-03	5.20E-01	6.60E-06
Ba-137m	0.00	0.00	6.10E-05
Bi-210	5.90E-06	1.90E-04	0.00
Bi-212	9.90E-07	2.10E-05	1.80E-05
Bi-214	2.40E-07	6.30E-06	1.40E-04
C-14	2.10E-06	2.10E-06	0.00
Cd-109	1.20E-05	1.00E-04	9.40E-07
Cm-242	1.10E-04	1.70E-02	9.30E-08
Cm-243	2.90E-03	3.50E-01	1.50E-05
Cm-244	2.30E-03	2.70E-01	8.30E-08
Co-57	1.10E-06	7.50E-06	1.40E-05
Co-60	2.60E-05	1.50E-04	2.30E-04
Cs-134	7.40E-05	4.70E-05	1.60E-04
Cs-137	5.00E-05	3.20E-05	0.00
Fe-55	5.80E-07	2.60E-06	2.20E-08
H-3	6.30E-08	6.30E-08	0.00
I-129	2.80E-04	1.80E-04	2.20E-06
Mn-54	2.70E-06	6.40E-06	8.40E-05
Na-22	1.20E-05	8.00E-06	2.10E-04
Nb-94	5.10E-06	3.30E-04	1.60E-04
Ni-59	2.00E-07	2.70E-06	4.20E-08
Ni-63	5.40E-07	6.30E-06	0.00
Np-237	3.90E-03	4.90E-01	3.20E-06
Pb-210	5.10E-03	1.30E-02	3.00E-07
Pb-212	4.10E-05	1.60E-04	1.60E-05
Pb-214	5.80E-07	6.70E-06	2.70E-05
Po-210	1.60E-03	8.10E-03	8.60E-10
Po-212	0.00	0.00	0.00
Po-214	0.00	0.00	8.40E-09
Po-216	0.00	0.00	1.50E-09
Po-218	0.00	0.00	0.00
Pu-238	3.80E-03	4.60E-01	8.60E-08

TABLE A-6

DOSE CONVERSION FACTORS
(Source: References 28 and 29)

Nuclide	Ingestion Dose Factors (mrem/pCi)	Inhalation Dose Factors (mrem/pCi)	Direct Gamma Dose Factors (mrem-m^3/pCi-yr)
Pu-239	4.30E-03	5.10E-01	3.80E-08
Pu-240	4.30E-03	5.10E-01	8.20E-08
Pu-241	8.60E-05	1.00E-02	0.00
Pu-242	4.10E-03	4.80E-01	6.80E-08
Ra-224	3.30E-04	2.90E-03	1.10E-06
Ra-226	1.10E-03	7.90E-03	7.60E-07
Ra-228	1.20E-03	4.20E-03	6.70E-14
Rh-106	6.10E-07	2.00E-07	2.10E-05
Rn-220	0.00	0.00	5.40E-08
Rn-222	0.00	0.00	4.00E-08
Ru-106	2.10E-05	4.40E-04	0.00
Sn-113	2.70E-06	8.90E-06	1.50E-06
Sr-90	1.30E-04	1.30E-03	0.00
Tc-99	1.30E-06	7.50E-06	6.30E-11
Th-228	3.80E-04	3.10E-01	2.80E-07
Th-230	5.30E-04	3.20E-01	9.10E-08
Th-232	2.80E-03	1.60E+00	6.70E-08
Tl-208	0.00	0.00	3.00E-04
U-234	2.60E-04	1.30E-01	8.10E-08
U-235	2.50E-04	1.20E-01	1.70E-05
U-236	2.50E-04	1.20E-01	7.30E-08
U-238	2.30E-04	1.20E-01	6.50E-08
Y-90	1.00E-05	8.20E-06	0.00
Zn-65	1.40E-05	1.80E-05	5.50E-05

APPENDIX B

EVALUATION OF THE POTENTIAL FOR WATER TO ACCUMULATE IN THE CLIVE DISPOSAL UNITS

APPENDIX B

EVALUATION OF THE POTENTIAL FOR WATER TO ACCUMULATE IN THE CLIVE DISPOSAL UNITS

B.1 INTRODUCTION

The waste disposal facility at Clive, Utah, is characterized by a desert climate and soils of low permeability. Because of the arid climate and relatively impermeable soil, groundwater pathways are estimated not to contribute to individual doses from waste disposal for at least 1,000 years after site closure (Section 5.2). However, because the soil has low permeability, the potential exists for the accumulation of water which infiltrates into the disposal units through the engineered cover system. If sufficient water were to percolate into the disposal units and accumulates, the water could eventually overflow the units and be released onto the ground surface (the bathtub effect). This overflowing water could contaminate the ground surface and cause radiological exposures to site intruders. Since there is no surface water in the vicinity of the Clive site, it is very unlikely that any contaminated water that overflows a disposal unit would cause exposures to off-site individuals.

This appendix describes an analysis of the potential for water to accumulate in the disposal units at the Clive facility. Both the methodology and the results of this analysis are discussed in this appendix.

B.2 METHODOLOGY

Two computer models, the HELP model[30] and the UNSAT-H[31] model, were used to evaluate the potential for water accumulation in the Clive disposal units.

The HELP computer model was developed for the U.S. Environmental Protection Agency to permit estimation of the amounts of surface runoff, subsurface drainage, and leachate that might be expected to result from the operation of disposal units with a wide variety of designs. The model evaluates the impacts of precipitation, runoff, infiltration, percolation, evapotranspiration, soil moisture storage, and lateral drainage using a quasi-two-dimensional approach.

The UNSAT-H computer model was developed at Pacific Northwest Laboratory to assess the water dynamics of near-surface waste disposal sites. It is a one-dimensional, finite difference model that simulates the unsaturated flow of groundwater. The model accounts for infiltration, drainage, redistribution, surface evaporation, and the uptake of water by plants. A modified version of UNSAT-H was used to model water infiltration at the Clive facility.

Climatologic data used for the computer simulations were adapted from two sources. Data for both the HELP and the UNSAT-H simulations were taken from the HELP model's climatologic data base for Ely, Nevada. Ely is the closest location with similar climatic conditions to those at Clive for which the necessary data were available. Additional data specifying potential evaporation rates were required for UNSAT-H. Data for Tooele, Utah[32] were used for that portion of the simulation.

Data from Ely, Nevada were chosen as representative of that at the Clive site because the precipitation is conservatively large and other conditions are believed to be similar, i.e., typical of arid western climates. Salt Lake City data were also considered, but found with substantially higher annual precipitation rates. Salt Lake City climatological data were considered to be unreasonably conservative relative to conditions which prevail at the Clive site. Consideration was also given to synthesizing climatological data from data subsets available from sources very near the Clive site (U.S. Army at the Dugway Proving Grounds). This possibility was rejected because of the delicate balance that exists between various climatological factors and the inability to assure that such data would be conservatively representative.

Generic soil characteristics were used in modeling the disposal facility. The topsoil at the facility was assumed to be loam, underlain by a clay layer with a saturated hydraulic conductivity of 1.0E-7 cm/s.[33] The waste was considered to have the characteristics of a sandy loam.[21] The native material below the waste was assumed to be clay, with a saturated conductivity of 1.0E-7 cm/s.[33]

Using these climatic and soil data, simulations of the Clive disposal facility were performed using each computer model. The initial simulations were based on the assumption that there was no rip-rap layer over the clay cover. A layer of topsoil was assumed to be present at the surface. These conditions would project evaporation in excess of what would actually be observed with rip-rap in place.

Additional simulations were performed using the HELP model to examine the impact of the reduced surface evaporation caused by the rip-rap layer. The rip-rap layer reduces the surface area from which evaporation can take place and also shades the soil surface. It reduces the effective evaporation rate by the fraction of soil surface area directly in contact with individual rip-rap rocks. The fraction of surface area from which evaporation cannot occur is equal to 1-p, where p is the porosity of the rip-rap layer (taken to be approximately 0.5). The rip-rap also shades the soil surface from direct solar radiation, thereby further reducing the effective evaporation rate. The damping depth for water evaporation through the rip-rap materials is approximately 35 cm[34] which is responsible for reducing the evaporation rate by the factor of exp(-45/35), or 0.28. The estimated combined effect of the rip-rap is to reduce the water evaporation rate to a value of only 14 percent of the projected evaporation rate without rip-rap.

The HELP model was used in two ways to simulate the reduction in surface evaporation resulting from the presence of the rip-rap layer. The first simulation reduced the evaporative depth, i.e., the zone from which water may undergo evaporation from the soil The evaporative depth was reduced from its expected value of 46 cm at Ely, Nevada to a smaller value which gave an evaporation rate only 14 percent of that estimated for the baseline no rip-rap case. The second simulation reduced the solar intensity, i.e., the flux of solar radiation incident on the site, to achieve an evaporation rate that was only 14 percent of the baseline evaporation rate.

The potential impact of cracking of the clay cover on water percolation rates was also considered. The extent and rate of cracking depends on the type of clay used for the cover and the rate of drying. Expansive clays will tend to shrink and crack more under arid conditions when compared to non-expansive clays. Rapid rates of drying will promote cracking relative to long-term drying. The cover design for the Clive facility specifies placement of a thin sand layer over the clay cap with a riprap layer on top of that. The potential for shrinkage of the clay, and subsequent cracking, may be significant, although the sand and riprap layers are believed to create conditions that will retain moisture and slow the drying rate.

B.3 RESULTS AND DISCUSSION

The distribution of precipitation among the various groundwater and surface water components, for the baseline case of no rip-rap layer over the disposal unit, is shown in Table B-1. As noted previously, the analysis was made using climatological data, including annual precipitation, for Ely, Nevada. Climatological data are not available for Clive, Utah, and Ely is the closest station for which complete climatological data were available that reasonably approximate the arid conditions at Clive. However, the average annual precipitation at Ely is larger than that at Clive by about 60 percent. Therefore, the results of the computer simulations, in terms of calculated water percolation rates, are considered to be conservatively large compared to actual conditions at Clive.

As shown in Table B-1, the distribution of the precipitation among the runoff, lateral drainage in the cover system, and deep percolation varies between the two computer models used for the analysis. The bases for these differences lie in slightly different input data and in the solution techniques used by the two models.

The parameter of primary importance for the analysis is the projected deep percolation rate. The deep percolation rate is the vertical flow rate at the boundary between the compacted soil layer at the bottom of the disposal unit and the underlying native soil. It is this flow rate which must be conducted away by soil below the disposal unit if no water is

TABLE B-1

PRECIPITATION DISTRIBUTION RESULTS WITHOUT RIP-RAP COVER

Parameter	Value	
	HELP Code	UNSAT-H Code
Runoff (cm/yr)	0.3	14.2
Evaporation (cm/yr)	20.1	7.5
Lateral Drainage (cm/yr)	0.4	0.1
Deep Percolation (cm/yr)	1.5	0.4

TABLE B-2

PRECIPITATION DISTRIBUTION RESULTS WITH RIP-RAP COVER

Parameter	Value Using HELP Code	
	Reduced Evaporation Depth	Reduced Solar Intensity
Runoff (cm/yr)	12.0	11.9
Evaporation (cm/yr)	2.7	2.8
Lateral Drainage (cm/yr)	4.8	4.5
Deep Percolation (cm/yr)	2.8	2.8

to accumulate in the disposal units. While the projected mass balances of water flows differ between the HELP and UNSAT-H computer models, both models predict similar rates of deep percolation. These results suggest that the projected rates of flow through the waste disposal units are reasonable.

The results shown in Table B-1 are based on the assumption of no rip-rap cover being in place over the disposal units. With the rip-rap cover in place, evaporation will tend to decrease, and the water flow rates for the other pathways will increase to compensate for the reduced rate of evaporation. Since the HELP model produced the higher (i.e., more conservative) estimate of the rate of deep percolation for the case of no rip-rap cover, the analyses performed to simulate the presence of rip-rap cover over the waste were made using the HELP model.

The results of the simulations which considered reduced evaporative potential are shown in Table B-2. As expected, the rates of evaporation decreased due to reductions in evaporative depth and reduced solar intensity. The remaining flow components all increased in magnitude (relative to the HELP base case -- Table B-1), to compensate for the decrease in water lost to evaporation. The increase in deep percolation rate is similar for both modeling approaches, amounting to an 80 percent increase over the deep percolation rate for the baseline (i.e., no rip-rap cover) analysis.

If cracking of the clay cover occurs, the water flow dynamics (whose results are presented in Tables B-1 and B-2) will be affected. Lateral drainage of water from the clay layer may be effectively negated. Water may drain laterally over the clay layer until it encounters a crack, at which point it may infiltrate vertically along the crack. The water may be absorbed by the clay or may continue to infiltrate. Surface runoff and evaporation will remain largely unaffected by cracking of the clay layer. Thus, the primary impact of cracking may be to increase the deep percolation by the amount of water which normally drains laterally. Based on the results shown in Table B-2, cracking could increase the deep percolation rates (by the amount of lateral drainage) to 7.3 cm/yr and 7.6 cm/yr (2.3E-07 cm/s and 2.4E-07 cm/s), respectively, for the reduced solar intensity and reduced evaporative depth scenarios.

The potential for accumulation of water in the disposal units at the Clive facility will depend on the rates at which water flows into and out of the disposal units. If the native soil beneath the disposal units can conduct water at flow rates equal to or greater than the percolation rates projected by this analysis, water accumulation in the units is unlikely. If the native soil cannot sustain these flow rates, water may accumulate in the disposal units. Under saturated conditions, the maximum rate of sustainable flow of water through a soil is given by the soil's saturated hydraulic conductivity. Water supplied to the soil at rates greater than this conductivity will not be conducted away vertically through undisturbed soil. Under these conditions, the water will flow laterally or, if this is not possible, will accumulate above the constraining soil layer.

Soil conductivity measurements for the Clive site have given saturated hydraulic conductivities ranging from about 1.0E-07 to 3.5E-03 cm/sec.[32] Soil conductivities tend to be lowest near the ground surface and at depths greater than 9.1 m below the ground surface. The low-conductivity soil depths correspond roughly to the depth at which disposal units would be constructed and the depth of the aquifer.

Saturated hydraulic conductivities at soil depths between 3.0 and 9.1 m typically range between 2.9E-07 and 8.4E-04 cm/s. The maximum projected percolation rate ranges between 2.3E-07 and 2.4E-07 cm/s, assuming lateral drainage appears wholly as percolation because of cracking in the clay cover. Therefore, the undisturbed native soils appear to be generally capable of conducting water at these maximum rates. Consequently, it appears unlikely that water would accumulate in the disposal units at the Clive facility. The conclusion that water will probably not accumulate in the Clive disposal units is based on the premise that saturated hydraulic conductivities of soils under all of the existing and proposed disposal units are similar to the values assumed in the analyses described above.

APPENDIX C

THE GENII COMPUTER MODEL

APPENDIX C
THE GENII COMPUTER MODEL

Benchmarking of the radiological doses and concentration limits obtained using the PATHRAE computer model[2] was performed by comparing the PATHRAE results with the results obtained using the GENII computer model.[24] Comparisons were made for the maximally exposed off-site individual and on-site worker scenarios, and are reported in Chapter 5. This Appendix provides a description of the GENII model and a brief discussion of the similarities and differences between GENII and PATHRAE.

GENII is a pathways computer model suitable for modeling acute and chronic exposures resulting from the release of radioactive contaminants to the environment. While in many ways GENII is similar to PATHRAE, significant differences do exist which may make it more or less suitable for use for performance assessments of LLW disposal facilities.

The modeling approaches adopted for use in the GENII model, and the similarities and differences between this model and PATHRAE are discussed below. This discussion is structured to correspond to the transport and exposure pathways modeled by the two codes.

C.1 GROUNDWATER TRANSPORT

Groundwater transport is not modeled by GENII. The user has the option of entering a groundwater concentration at a well used by humans. If this is done, the model calculates exposures resulting from use of the water for direct consumption and for irrigation and animal use.

This approach does not allow specification of a contaminant travel time to the well. Hence, any groundwater concentration specified is immediately available for direct consumption, irrigation, and animal use.

PATHRAE will permit input of simple flow parameters for the unsaturated and saturated zones. These data, in conjunction with nuclide transport data, are used to project contaminant travel times and, ultimately, exposures resulting from the use of the water. The model takes into account lateral and longitudinal dispersion.

C.2 SURFACE WATER TRANSPORT

Transport of waterborne contaminants is modeled by GENII for non-tidal rivers and near-shore lake environments. For each of these environments, the model calculates a mixing ratio, the ratio of the concentration at the usage location and the initial concentration. The user may also input a mixing ratio if the models used in the code are not used.

GENII calculates surface water concentrations as a function of distance downstream from the point of discharge. The river mixing model assumes a constant river flow rate, width and depth, and accounts for chronic and acute releases. Both the river and lake models account for the points of discharge and intake of water.

The modeling of surface water transport requires input of the initial liquid contaminant concentrations, the rate of discharge to the river or lake, and numerous characteristic dimensions of the surface water under consideration. The model does not calculate rates of discharge due to trench overflow or other modes of overland contaminant transport.

PATHRAE simply dilutes contamination reaching surface streams or rivers by the annual flow rate of that body. No account is taken for the distance downstream at which that water is used, or lateral and vertical dispersion of the material in the river or lake. PATHRAE will, however, calculate the amount of contamination released from the trench due to erosion or trench overflow.

C.3 ATMOSPHERIC TRANSPORT

GENII can implement a variety of atmospheric dispersion models for use in determining doses from acute and chronic releases. The code provides three straight-line Gaussian plume models for release durations of 30-240 minutes, 2-8 hours, and 4 hours and longer. It also provides an empirical building-wake diffusion model for modeling atmospheric concentrations close to the point of release. Finally, the user may input an atmospheric dispersion parameter calculated independently of GENII.

The atmospheric dispersion models calculate the effective release height, accounting for buoyancy and momentum flux. The models also account for plume reflection at the ground and at the top of the mixing layer.

The Gaussian plume models are used to calculate atmospheric concentrations for acute and chronic exposures of individuals and populations. For chronic exposures to individuals the user may input a pre-calculated ratio of air concentration and source release rate (CHI/Q), ask the code to calculate this parameter for a specified location, or direct the code to solve for the maximally exposed individual. The latter two options require either a grid of pre-calculated CHI/Q values or a joint frequency file, with wind speeds, stabilities and frequency of occurrence data. Chronic population exposures require the data given above as well as population distribution data.

Required input for modeling acute releases includes either a time integrated short-term dispersion parameter (E/Q, similar to CHI/Q except for instantaneous releases) or a location of interest. The latter option also requires input of either a grid of pre-calculated E/Q values or a set of joint frequency data. Population distribution data are required for the population calculations.

The building-wake model is based on empirical data from seven locations. The basic model is incorporated into a composite model to allow better prediction of air concentrations near the source and to asymptotically approach the Gaussian plume model at large distances. Additional sub-models are used to improve prediction of the behavior of elevated releases for short stacks and rooftop vents.

PATHRAE also models atmospheric dispersion using the Gaussian plume model, accounting for effective release height and reflection at the top of the mixing layer. It is less versatile than GENII in that it does not provide for as wide an array of atmospheric releases of different durations. Also, PATHRAE provides no capacity to model releases affected by building wakes. However, this latter aspect is likely unimportant, for the present application.

C.4 SOIL TRANSPORT DYNAMICS

GENII models the accumulation of radionuclides in soil as a result of deposition from airborne contamination, biotic transport, manual redistribution, and irrigation. Soil accumulations are also depleted due to resuspension and uptake by crops.

In PATHRAE, the soil compartment is comprised of three discrete components: the surface soil, the deep soil and the buried waste. The buried waste component differs from the deep soil layer as the existence of a waste package, with a finite lifetime, may be modeled. A fourth component, situated between the surface and deep soil layers can be considered to exist through the appropriate application of rooting depth fractions.

Contamination may be lost from the surface soil through harvest removal, radioactive decay, and leaching to deeper soil layers. The loss of nuclides from the surface soil due to leaching is modeled using leaching based on the distribution coefficient (K_d). Radionuclides in the subsurface soil may be transported to the surface soil by root uptake, through physical transport by animals, or by human intrusion. Nuclides may also be deposited on the surface soil by atmospheric deposition.

PATHRAE accounts for the removal of radionuclides from the soil through decay and leaching to deeper soil layers. Contaminants in the root zone may be assimilated by plants grown at the site. Nuclides in subsurface soil may be excavated through human intrusion as well. No provision is made in PATHRAE to model the impact of animal intrusion.

C.5 FOODCHAIN TRANSPORT

GENII models exposures resulting from the consumption of contaminated water, plant material, and animal products. Inadvertent ingestion of soil and water, e.g. during swimming, may also be evaluated.

Plants may become contaminated due to direct deposition of airborne or waterborne contaminants or through root uptake. Depositional uptake accounts for deposition and retention rates, translocation rates from the plant surface to the edible portion of the crop, weathering and the length of the growing season, and delay time between harvest and consumption. Root uptake of contamination considers root distributional characteristics in a limited fashion and the plant concentration factor for each nuclide under consideration.

GENII provides empirical relationships for calculating the plant interception fraction for atmospheric deposition. These relationships address grasses, leafy vegetables and grains, and fruits and other vegetables separately. These formulations provide an alternative to a uniform fraction for all types of vegetation, currently used in most RAE assessments.

Concentrations of radionuclides are considered in a number of animal products, including meat, milk, poultry, and eggs. Contamination is assimilated following the consumption of contaminated hay, fresh forage or grain, or any combination thereof. Account is taken of the delay time between slaughter of the animal and the time of consumption by humans.

Consumption of aquatic foods is also addressed by GENII, including fish, mollusks, invertebrates and water plants. Radionuclide concentrations in these foods are calculated using bioaccumulation factors, and account is taken of delay time between harvest and consumption.

GENII also provides the ability to model exposures due to consumption of foodstuffs contaminated as a result of acute releases. The initial deposition on the ground and plant

surfaces is determined from the integrated air concentration or the integrated water concentration (used for irrigation).

The incorporation of radionuclides in plant tissues and, ultimately animal tissues, following an acute release will depend on the season of the year and the corresponding plant growth dynamics. The rate of uptake of contamination due to consumption is given by a time integral over the consumption period. This integral accounts for radioactive decay that occurs during the growing season and prior to consumption of the crop or animal product.

The treatment of foodchain transport in GENII is similar to that implemented in PATHRAE. GENII provides more opportunity for input of a diverse diet than PATHRAE and also provides an empirical approach to the calculation of plant interception fractions. GENII also provides the opportunity to model foodchain transport under acute release conditions, whereas PATHRAE does not.

C.6 RADIOLOGICAL DECAY CHAINS

The decay chain processor in GENII yields the activity of any member of a decay chain as a function of time from any initializing condition. Variants of the processor provide the total activities of chain members for conditions of continual input of the parent to the system. The chain processor utilizes a recursive application of the Bateman equations.

The capability to consider decay chains is also present in PATHRAE for specified radionuclide decay sequences. The Bateman equations are also the basis for calculation of daughter concentrations in this computer model.

C.7 DOSIMETRY

GENII is capable of modeling exposures to populations or individuals under chronic and acute release conditions. Individual exposures may be tailored to address the average or maximally exposed person. The basis of the modeling of exposures is described below.

C.7.1 External Exposure Modeling

The ISOSHLD code is the basis of calculations of external exposures due to submersion in a cloud of radioactive materials, immersion in contaminated water, and direct exposure to plane or slab sources of contamination. ISOSHLD can also be used to model a variety of source and shielding geometries to generate radionuclide dose factors for use in GENII runs. Source geometries which can be addressed include point, line, spherical, slab and cylindrical sources. Slab, spherical, cylindrical, and cylindrical and slab shield configurations can all be modeled with GENII.

Exposures due to air submersion can be modeled using either a semi-infinite or finite plume model. The former model is based on the assumption that the plume is semi-infinite in size, bounded by the ground plane, and that the energy deposition per unit volume of air is equal to the rate of energy emission per unit volume. The finite plume model considers the size and shape of the plume to estimate the actual dose rate at the center of the plume at ground level. Each approach may be used to model acute and chronic release scenarios.

External exposure modeling for aquatic recreational activities considers direct radiation received during boating, swimming and shoreline activities. Boating and swimming exposures consider radionuclide concentrations in the water, while shoreline exposures result from sediment contaminant activities. Shoreline exposures take into account the finite size of the shoreline.

External doses received from surface soil contamination consider contamination from airborne deposition for the average individual or population. Soil contamination due to irrigation is also considered for the maximally exposed individual.

PATHRAE does not consider external exposures due to submersion in a contaminated plume nor from recreational activities. Exposures from ground surface contamination is modeled in a manner that accounts for the finite size of the source and for build-up in the soil layer.

C.7.2 Internal Exposure Modeling

Internal dosimetry is performed in GENII using the task group lung model[35] and the Eve GI-tract model.[36] These models are linked to the transfer compartment, from which nuclides may translocated to additional organs or tissues. Nuclide concentrations in each compartment of the complete model are calculated taking into account rates of intake and excretion and radiological decay during the material's residence time.

A number of specialized models are used to account for certain compartments and/or contaminants in greater detail. The alkaline earth model addresses the dynamics of the bone in greater detail. The iodine model allows calculation of doses to the fetal thyroid from iodine ingestion by the mother. The tellurium/iodine model accounts for the formation of iodine through the decay of tellurium. The radium/radon, tritium, and carbon models account for peculiarities of those nuclides.

Using these models, GENII calculates the incremental doses to each organ. These doses are combined to arrive at annual, committed and cumulative doses.

PATHRAE dose calculations are limited to whole body committed doses and corresponding health risks. Individual organ doses are not calculated.

C.8 INPUT/OUTPUT REQUIREMENTS

C.8.1 Data Input

The types of data required to operate GENII are, generally, similar to those used in PATHRAE. The additional detail to which GENII goes in modeling some of the pathways results in the need for more data, however.

The GENII computer program provides default data for the majority of the input parameters required for operation. While many of these data may be changed by the user through the interactive interface to the code, a number of parameters cannot be explicitly reviewed. An example of this is the vast majority of nuclide-specific data.

This aspect of model operation is important to keep in mind as it is relatively easy to respond to the prompts for data input and to overlook those parameters for which no data entry was required. In order to change the default data in these situations, the user must edit various default data files provided with the code.

C.8.2 Code Output

The nature of the output from GENII will depend on the report options selected by the user. The Annual Effective Dose Equivalent (AEDE) report option provides the committed dose from one year of exposure. Dose output by radionuclide or pathway may be obtained by selecting other report options. Finally, the model allows the user to see intermediate output on the screen during execution. This information, to be used for debugging, is cryptic and requires a high level of familiarity with the model to interpret.

Regardless of the report option chosen, output from GENII includes a short summary of selected input data. The model indicates whether the simulation considers near or far-field exposures, chronic or acute releases, and individual or population exposures. The transport and exposure pathways modeled are displayed, as are the times of exposure and the input

source compartment inventories. Selected data are then displayed for the various transport and exposure pathways under consideration. A complete summary of the input data is not, however, supplied with the output.

Selection of the AEDE report option results in a printed summary of committed dose equivalents, weighted and unweighted, by organ, as well as the external dose. The controlling organ, pathway and nuclide are given as are the effective dose equivalents for the ingestion and inhalation pathways. Additional output provides the cumulative dose over the dose commitment period and the dose for the maximum year of exposure. The output is completed with a summary of nuclide doses due to ingestion, inhalation and external exposure.

The pathway report option provides committed dose equivalents by exposure pathway for exposures due to ingestion and direct radiation. These pathways include the various types of foodstuffs consumed for the former and the exposure conditions, e.g. air submersion, surface soil and water immersion, for the latter.

Committed dose equivalents are provided by radionuclide for the remaining report options. These doses are given for all organs considered by the model.

REFERENCES

1. Rogers and Associates Engineering Corporation, "Prototype License Application: Safety Analysis Report; Below Ground Vault," U.S. Department of Energy through EG&G Idaho, Inc., DOE/LLW-73T, October 1988.

2. "PATHRAE-EPA -- A Performance Assessment Code for the Land Disposal of Radioactive Wastes," prepared for the U.S. Environmental Protection Agency, Office of Radiation Programs by Rogers and Associates Engineering Corporation, RAE-8706/1-6, November 1987.

3. Utah Radiation Control Rules, Chapter R447-25, "Licensing Requirements for Land Disposal of Radioactive Waste," State of Utah, Department of Health, Division of Environmental Health, July 1, 1989.

4. U.S. Nuclear Regulatory Commission, "10 CFR Part 61, Licensing Requirements for Land Disposal of Radioactive Waste," Federal Register, Vol. 47, pp. 57446 - 57477, December 27, 1982.

5. U.S. Department of Energy, "Radioactive Waste Management: Chapter 3, Management of Low-Level Waste," DOE Order 5820.2A, Chapter 3, September 1988.

6. U.S. Nuclear Regulatory Commission, "Criteria Relating to the Operation of Uranium Mills and the Disposition of Tailings or Wastes Produced by the Extraction or Concentration of Source Material From Ores Processed Primarily for Their Source Material Content," 10 CFR Part 40, Appendix A, April 28, 1989.

7. U.S. Environmental Protection Agency, "Health and Environmental Protection Standards for Uranium and Thorium Mill Tailings," 40 CFR Part 192, July 1, 1988.

8. U.S. Environmental Protection Agency, "Standards for Owners and Operators of Hazardous Waste Treatment, Storage, and Disposal Facilities," 10 CFR Part 264, July 1, 1988.

9. "Uranium Mill Tailings Radiation Control Act of 1978," PL 95-604, November 1978.

10. U.S. Department of Energy, "Remedial Actions at the Former Vitro Chemical Company Site South Salt Lake, Salt Lake County, Utah," 2 volumes, DOE/EIS-0099-F, July 1984.

11. Rogers, V.C., G.M. Sandquist and K.K. Nielson, "Radon Attenuation Effectiveness and Cost Optimism of Composite Covers for Uranium Mill Tailings," UMTRA-DOE/ADO-165, prepared for the U.S. Department of Energy by Rogers and Associates Engineering Corporation, 1981.

12. U.S. Environmental Protection Agency, "40 CFR Part 192, Standards for Remedial Actions at Inactive Uranium Processing Sites," Federal Register, Vol. 48, pp. 590-609, January 5, 1983.

13. U.S. Nuclear Regulatory Commission, "10 CFR Part 2, Radioactive Waste Below Regulatory Concern; Policy Statement," Federal Register, Vol. 51, pp. 30829 - 30847, August 29, 1986.

14. "Low-Level Radioactive Waste Policy Amendments Act of 1985," PL 99-240, January 1986.

15. International Commission on Radiological Protection, "Radiation Protection Principles for the Disposal of Solid Radioactive Waste," ICRP Publication 46, adopted July 1985.

16. "Commission Rejects Staff - Proposed Regulatory Exemption Policy," The Radioactive Exchange, Vol. 8, No. 20, November 22, 1989.

17. U.S. Environmental Protection Agency, "Title 40, Code of Federal Regulations, Part 193, Environmental Radiation Protection Standards for Management and Land Disposal of Low-Level Radioactive Wastes," undated draft, provided to DOE, September 1987.

18. Texas Low-Level Radioactive Waste Disposal Authority, "Disposal of Short-Lived Radionuclide Wastes in a Sanitary Landfill: Final Report," prepared for Texas Low-Level Radioactive Waste Disposal Authority by Rogers and Associates Engineering Corporation, February 1987.

19. "Rulemaking Petition to Exempt Reactor Waste for Disposal as Below Regulatory Concern," Electric Power Research Institute for NUMARC/EEI-UMWMG, in preparation as of December 1989.

20. U.S. Department of Energy, "Radioactive Waste Management," DOE Order 5820.2A, September 26, 1988.

21. Matthews, S.P., personal communication to M.K. Bollenbacher (Rogers and Associates Engineering Corporation) during Clive site visit, March 19, 1990.

22. Matthews, S.P. and C.A. Judd, personal communication to M.K. Bollenbacher of Rogers and Associates Engineering Corporation, March 8, 1990.

23. Striegl, R.G. and R.W. Healy, "Transport of $^{14}CO_2$ in Unsaturated Gracial and Eolian Sediments," Chemical Modeling of Aqueous Systems II, American Chemical Society, Washington, D.C., 1990.

24. Napier, B.A., et al., "GENII: The Hanford Environmental Radiation Dosimetry Software System," Pacific Northwest Laboratory, PNL-6584, three volumes, 1988.

25. Kocher, D.C., "Radioactive Decay Data Tables," U.S. Department of Energy, Technical Information Center, DOE/TIC-11026, 1981.

26. Looney, B.B., et al., "Estimation of Geochemical Parameters for Assessing Subsurface Transport at the Savannah River Plant," E.I. du Pont de Nemours & Co., Savannah River Laboratories, DPST-85-904, March 1987.

27. King, C.M., et al., "Methodology and Parameters for Assessing Human Health Effects for Waste Sites at the Savannah River Plant," E.I. du Pont de Nemours & Co., Savannah River Laboratories, DPST-86-298, September 1986.

28. "Internal Dose Conversion Factors for Calculation of Dose to the Public," U.S. Department of Energy, DOE/EH-0071, 1988.

29. "External Dose-Rate Conversion Factors for Calculation of Dose to the Public," U.S. Department of Energy, DOE/EH-0070, 1988.

30. Schroeder, P.R., et al., "The Hydrologic Evaluation of Landfill Performance (HELP) Model -- Volume 1, User's Guide for Version 1," PB85-100840, U.S. Environmental Protection Agency, August 1989.

31. Fayer, M.J., et al., "UNSAT-H Version 1.0: Unsaturated Flow Code Documentation and Applications for the Hanford Site," PNL-5899, Pacific Northwest Laboratory, August 1986.

32. C.W. Thornthwaite Associates, "Average Climatic Water Balance Data of the Continents -- Part VII, United States," Publications in Climatology, Vol. XVII, No. 3, Centerton, N.J., 1964.

33. "Hydrogeologic Study -- Mixed Waste Landfill Cell -- South Clive, Tooele County, Utah," prepared for Envirocare of Utah, Inc., by Delta Geotechnical Consultants, Inc., November 1989.

34. Sellers, W.D., Physical Climatology, University of Chicago Press, 1965.

35. International Commission on Radiological Protection (ICRP). 1966. "Deposition and Retention Models for Internal Dosimetry of the Human Respiratory Tract." Health Physics, 12:173.

36. Eve, I.S. 1966, "A Review of the Physiology of the Gastro-intestinal Tract in Relation to Radiation Doses from Radioactive Materials," Health Physics, 12:131.