RAS 10984

Sandia National Laboratories

Albuquerque, New Mexico 87185

December 16, 1992

DOCKETED USNRC

2005 DEC 21 PM 3:31

OFFICE OF THE SECRETARY RULEMAKINGS AND ADJUDICATIONS STAFF

Mr. Fred Ross
Low-Level Waste Management Branch
Division of Low-Level Waste Management and Decommissioning
Office of Nuclear Material Safety and Safeguards
Mail Stop 5E4, OWFN
U.S. Nuclear Regulatory Commission
Washington, DC 20555

Dear Mr. Ross:

Enclosed is the final report on the performance assessment of the proposed disposal of depleted uranium as Class A low-level waste. This letter report is a deliverable under Task 5.0 of FIN A1764.

We have altered the report to address the majority of comments from the Division of Industrial and Medical Nuclear Safety [Reference: NRC memo from John Hickey to Paul Lohaus, dated July 24, 1992]. However, several comments in the memo require additional discussion; some of this further discussion is given in this cover letter.

- As discussed with the NRC program manager in phone conversations, addressing general comments 1, 2, 3, 4, and 5, specific comment 17, and part of specific comment 12 are outside the scope of the work requested of SNL by NRC.

- General comment 6, which states that U_3O_8 cannot be soluble, or "there would be no pitchblende ore in the world" is incorrect. The performance assessment analysis is not intended to represent all conditions that exist in the world. Instead, it acknowledges that there are some conditions under which uranium oxides *are* soluble, and bases the deliberately conservative analysis on those conditions. We have not taken credit, for example, for high silicate content of the soil, which would tend to complex the uranium and produce much lower solubility limitations. The presence or absence of complexing agents that fortuitously lower solubilities is a site-specific issue that cannot (and should not) be included in a generic analysis. The comment also argues that pitchblende remains stable "even under saturated conditions," in spite of the discussion in the draft report that the relatively high solubilities are representative of oxidizing conditions found in the vadose zone; that is, disposal in the saturated zone is more stable than in the unsaturated zone. We have added additional discussion on this topic in Section 3.3.4 of the report.

U.S. NUCLEAR REGULATORY COMMISSION
In the Matter of Louisiana Energy Services, L.P.
Docket No. 70-3103-ML Official Exhibit No. NRS/LP 428
OFFERED by: Applicant/Licensee Intervenor NRS/PC
NRC Staff Other
IDENTIFIED on 10/25/05 Witness/Panel Makhijani
Action Taken: ADMITTED REJECTED WITHDRAWN
Reporter/Clerk Bethany Engel

Template=SECY-028

SECY-02

- Specific comment number 6, that bone dose should be averaged over the entire bone mass is incorrect, so the analysis has not been changed. I quote from ICRP Publication 26, page 10: "The radiosensitive cells in bone have been identified as the endosteal cells and epithelial cells on bone surfaces (see ICRP Publication 11). The Commission [ICRP] recommends that, where possible, dose equivalent in bone should apply to the endosteal cells on bone surfaces, and should be calculated as an average over tissue up to a distance of 10 μm from the relevant bone surfaces." The report goes on to state that the risk factor for bone cancer is taken to be $5x10^{-4}$ Sv^{-1} ($5x10^{-9}$ $mrem^{-1}$). The doses linked to this risk factor are assumed to be calculated by the ICRP 26 dosimetry methodology; that is, the dose in Sv (joules/kg) only relates to cancer risk if it is averaged over the endosteal cells. Averaging over the entire bone would not produce a quantity related to cancer risk by a known quantity in the ICRP 26 methodology.

- The memo suggests that the modeling in the report "...serves to confirm the unreasonableness of blindly modeling potential uptake of uranium..." in spite of numerous cautions in the report that these doses are indicators of problems rather than actual doses that an individual would receive. The modeling was not done "blindly," nor was it done "without considering the physical and biological limitations of the models." Instead, it was done, *as are all performance assessment analyses*, to produce numbers that can be used to make regulatory decisions, rather than in an attempt to calculate actual values of doses. Since the doses are high enough that they are "impossible for <u>living</u> human beings," the regulatory issues appear to be clear-cut enough without bothering to use a high-dose rate model of the human body that would give more accurate results. The memo also erroneously states that "... well-engineered barriers should prevent any significant mobilization and migration of uranium in the long term." The author of this comment is apparently not aware of current thinking in NRC (as well as internationally) about engineered barriers and their uncertain behavior in the long term. Not even the greatest advocate of engineered vaults will claim that they will prevent migration of radionuclides for 1,000 years or longer.

- Specific comment 7 contains a number of misconceptions about physical processes, treatment of uncertainty, and the purpose and intent of performance assessment. First, the author of this comment appears to believe that we are attempting to develop a dose reconstruction far into the future, which as you know, is neither possible nor desirable. The author of the comment was also extremely selective in highlighting cautionary statements in the quote from our report, to the extent that the meaning of the passage is lost. In fact, the approach described in that paragraph is to be deliberately conservative in treating uranium compounds, since there are conditions at specific sites under which high solubility will exist, but to use the expected behavior of daughters. For these radionuclides the "most conservative solubility class is appropriate" [emphasis added] since fluorides or oxyfluorides are the expected form of the daughters in the presence of large amounts of HF. The level of pessimism in this analysis does not reflect something that is "almost impossible", but rather expected conditions when HF is present. Any other choice of variables would have required a deliberately nonconservative and risky philosophy. The final point to be addressed relates to the comment about failure of any Part 61 site. As you know, the approaches used in this report are not significantly more conservative than performance assessment approaches adopted throughout the U.S. by State and Compact regulatory authorities, nor are they more conservative than approaches used at DOE facilities, nor are they more conservative than internationally used approaches. Existing and projected sites containing "normal" low-level waste can and will comply with these kinds of analyses; less conservatism will be used as needed using site-specific information. Also, as discussed in Section 7.3.4 of the report, "normal" low-level waste is expected to produce reducing conditions in the vault, which will tend to reduce uranium solubilities and associated off-site impacts. Hence, disposal of a monolithic uranium waste such as the one considered here is expected to have larger impacts, curie for curie, than will uranium disposed of mixed with other wastes.

- Specific comment 13 is entirely correct, and we have added significantly to both intruder and off-site analyses to address this comment.

- Specific comment 14 is incorrect from a performance assessment standpoint. Regardless of the "correctness" of the assumption, it is a reasonably conservative one. More importantly, the point is immaterial, since daughter doses were neglected in the analysis.

We were able to address many of the other comments in the memo by adding additional text or tables. For instance, the difference between the dilution factors in the two intrusion scenarios (specific comment 12) was already described in the report, but we have added text to clarify the differences between the scenarios.

In addition to addressing the comments from the Division of Industrial and Medical Nuclear Safety, we have addressed comments from the Division of Low-Level Waste, described in a phone conversation between us on July 27. As part of addressing those comments, we have expanded the analysis of geochemical effects to include site-specific analyses of uranium migration at the hypothetical site used in the current NRC staff capability problem statement. We caution that these conditions are not necessarily representative of a generic site. Doses that result from these analyses may be either higher or lower than any other specific site; there is no way to distinguish the differences between sites in general. These analyses should therefore be viewed as one possible realization of solubility limits at one particular site. As such they should be used with caution if they are used in making generic policy decisions.

If you have any questions or comments, please contact me at (FTS) 844-6645.

Sincerely,

Matthew W. Kozak, Ph. D.
Senior Member of the Technical Staff
Safety and Risk Assessment Department 6331

Copy to (w/ encl.):
6118 H. W. Stockman
6331 Day File
6331 2120.010 File
6331 P. A. Davis
6331 T. A. Feeney
6331 M. W. Kozak
6613 C. D. Leigh

PERFORMANCE ASSESSMENT OF THE PROPOSED DISPOSAL OF DEPLETED URANIUM AS CLASS A LOW-LEVEL WASTE

Kozak et al, 1992, Final

Argon's Copy

Matthew W. Kozak, Thomas A. Feeney,
Safety and Risk Assessment Department 6331
Sandia National Laboratories

Christi D. Leigh
Manufacturing Systems Reliability Modeling Department 6613
Sandia National Laboratories

and

Harlan W. Stockman,
Geochemistry Department 6118
Sandia National Laboratories

FIN A1764 Final Letter Report
submitted December 16, 1992

to
F. W. Ross
Low-Level Waste Management Branch
Division of Low-Level Waste Management and Decommissioning
Office of Nuclear Material Safety and Safeguards

LES-01481

Acknowledgements

The authors wish to thank Jim Krumhansl and Randy Cygan, both of the Geochemistry Department 6118, for checking the geochemical analyses uranium reactivity and solubility, and for assisting the development of this report with their insights into uranium geochemistry.

1.0 Introduction

Louisiana Energy Services (LES) has applied to the NRC for a license to operate a uranium enrichment facility. If licensed, the facility will be the first commercial large-scale gas centrifuge enrichment plant operated in the U.S. The applicant states that the project will generate 300 14-ton cylinders of depleted uranium hexafluoride (UF_6) annually. The (UF_6) will be stored on site during the 28 years of facility operation. A preliminary calculation by the NRC indicates that approximately 1,250,000 ft^3 of depleted uranium will be generated over the lifetime of the project. In 1991, the Commission issued an order on this matter, asking the applicant to assess "plausible strategies for disposition of [depleted uranium hexafluoride] tails" and requiring the applicant to address in its Environmental Report, as required by 10 CFR Part 51, alternatives for disposition of depleted uranium hexafluoride.

Decommissioning of the facility would take place over a five year period, from 2023 to 2028. During this time, the applicant proposes that if the stored UF_6 is determined to be waste, it will be converted to uranium tetrafluoride (UF_4) and shipped for disposal at a licensed 10 CFR Part 61 low-level waste disposal facility somewhere within the Central Interstate Compact. The LES project would therefore be disposing of approximately 250,000 ft^3 (1,250,000 ft^3/5 years) of depleted uranium wastes annually during the decommissioning period. According to the concentration limits and provisions of 10 CFR 61.55, the depleted uranium would be considered Class A waste. Thus, these wastes might be acceptable for disposal in a Part 61 facility. Given the large inventory and form of the depleted uranium wastes, and the fact that this type of waste was not included in the Environmental Impact statement (EIS) analyses supporting 10 CFR Part 61, further analysis is necessary to demonstrate whether the disposal of this material in a 10 CFR Part 61 disposal facility will be acceptable in terms of public health and safety. As part of NRC's evaluation of the LES application, the Division of Low-Level Waste Management and Decommissioning (LLWM) is providing technical assistance to address this issue.

1.1 Waste Form and Concentrations

The proposal from LES is to dispose of the depleted uranium as UF_4, and the majority of the analyses described in this report relate to disposal of UF_4. However, consideration shall also be given to converting the waste to U_3O_8, with subsequent disposal of the oxide. Lemons *et al.* [1990] have stated that "environmental, safety, and health issues clearly favor U_3O_8 as the uranium form for long-term storage or disposal of depleted uranium." Lemons *et al.* discarded the notion of permanent disposal of UF_4 out of hand, "since UF_4 reacts slowly with moist air, forming oxides and releasing corrosive HF." The release of HF is of particular concern for waste disposal in a commercial facility, since most commercial facilities are being designed as concrete vaults. The HF can be expected to actively attack the concrete structure, degrading it in terms of permeability and structural stability. In addition, releases of HF in the presence of large amounts of concrete provides the potential for conversion of the uranium fluorides to uranium carbonates, which tend to be more mobile and soluble than other forms of uranium.

We begin by evaluating the concentrations of radionuclides in the waste as disposed. The license applicant reports the typical isotopic abundances in the waste shown in Table 1. Data also shown in the table are the half life and isotopic weight, which are needed to convert weight fractions to curie contents.

Table 1 Typical isotopic abundances in depleted uranium (g isotope/ g total uranium) reported by LES

Isotope	weight fraction	half life (yrs)	isotopic weight
U-234	$1x10^{-5}$ - $2x10^{-5}$	$4.47x10^{9}$	234.04
U-235	0.002 - 0.0035	$7.04x10^{8}$	235.04
U-238	0.9965 - 0.998	$2.45x10^{5}$	238.05

It is not clear *a priori* whether it will be more conservative to analyze waste relatively rich in U-238 or U-235. Consequently we have analyzed a midpoint isotopic ratio, which is identified in Table 2. The range of potential isotopic abundances is a relatively small uncertainty relative to all other uncertainties in the overall analysis.

Table 2 Design basis isotopic abundances (g isotope/ g total uranium) used in this report

Isotope	weight fraction	half life (yrs)	isotopic weight
U-234	$2x10^{-5}$	$2.45x10^{5}$	234.04
U-235	0.0025	$7.04x10^{8}$	235.04
U-238	0.9975	$4.47x10^{9}$	238.05

We begin with a design basis of $1.2x10^{6}$ ft^3 of solid UF_6. The bulk density of UF_6 is 4.7 g/cc, and the bulk density of UF_4 varies 2.0-4.5 g/cc [Lemons *et al.*, 1990]. Using these values, it is possible to identify a weight and volume of the disposed waste, from which the radiological content and concentrations can be calculated using the above weight fractions. We convert the volume of waste to $1.08x10^{11}$ g of uranium to be disposed ($1.42x10^{11}$ g UF_4 or $1.24x10^{11}$ g U_3O_8). The variable density of UF_4 leads to a range of possible values for concentration, which are shown in Table 3. Concentrations in the waste are calculated based on a potential range of disposed volume of $3.16x10^{4}$ - $7.10x10^{4}$ m^3 of UF_4.

Table 3 Isotopic concentrations in the waste for UF_4

Isotope	Ci Content	Minimum Concentration (Ci/m^3)	Maximum Concentration (Ci/m^3)
U-234	$1.35x10^{4}$	0.190	0.427
U-235	$5.83x10^{2}$	$8.21x10^{-3}$	$1.84x10^{-2}$
U-238	$3.62x10^{4}$	0.510	1.15

A similar analysis can be performed for the potential U_3O_8 waste. The volume of U_3O_8 waste may range 3.18×10^4 - 8.47×10^4 m^3, depending on its bulk density range as given by Lemons *et al.* [1990]. These values coupled with the maximum curie content given above lead to the concentration range shown in Table 4.

Table 4 Isotopic concentrations in the waste as buried for U_3O_8

Isotope	Minimum Concentration (Ci/m^3)	Maximum Concentration (Ci/m^3)
U-234	0.159	0.424
U-235	6.89×10^{-3}	0.018
U-238	0.427	1.140

These are the calculated concentrations of the pure waste. Waste emplaced in the facility will be diluted from these values by mixing with backfill materials. Assumptions about this additional dilution will be identified below in the appropriate sections.

1.2 Chemical Stability of UF_4 Waste Form

Lemons *et al.* [1990] state that UF_4 reacts slowly in moist air to produce a uranium oxide and HF. It is clear that over the very long time periods that must be considered in the performance assessment, water and air will contact the waste at some point. Consequently, the potential effects of chemical reactivity of the waste need to be assessed.

Chemical reactions can influence the performance assessment in several ways. First, the waste can be converted to a more soluble chemical form, which would tend to increase the mobility of the waste and lead to increased offsite exposures. Second, since the reactions produce HF, an extremely corrosive material, the potential exists for the waste to degrade the engineered containment structures of the facility. It is likely that the proposed waste would be disposed of in a concrete vault similar to the one being proposed for the Nebraska facility in the Central Interstate Compact. It is likely that significant conversion of concrete to CaF_2 (fluorite) would destroy the structural integrity of the vault.

An evaluation of the effects of chemical reactivity should account for two aspects of the reaction. First, we are concerned with the *equilibrium extent* of the reaction: the potential reaction *if* equilibrium is reached. Second, we are concerned with the *rate* of reaction.

Two reactions were considered:

$$3 \cdot UF_4 + O_2(g) + 6 \cdot H_2O = 12 \cdot HF(aq) + U_3O_8 \qquad (1)$$

and

$$UF_4 + \frac{1}{2}O_2(g) + 4 \cdot H_2O = 4 \cdot HF(aq) + Schoepite, \quad (2)$$

where Schoepite is $UO_3 \cdot (2 \cdot H_2O)$. Schoepite is a common alteration mineral; for example, we find it on uranium metal fragments at existing waste sites in the DOE complex. Also interesting is the fact that both schoepite and U_3O_8 are soluble in acidic solutions [Dean, 1979], so oxides produced from UF_4 may be more soluble under disposal conditions than if disposed of in the absence of fluoride.

We assume the activities of the solid phases and water are unity, and calculate the equilibrium constants:

$$K_1 = \frac{a[HF]^{12}}{a[O_2]} = 10^{29.43} \text{ at } 25\ ^\circ C, \quad (3)$$

and

$$K_2 = \frac{a[HF]^4}{a[O_2]^{1/2}} = 10^{16.33} \text{ at } 25\ ^\circ C. \quad (4)$$

The symbol a[x] denotes activity, roughly corresponding to molar concentration (or mole fraction for gases). The thermochemical database used to calculate K is from the Gt/React codes, which are maintained by the University of Illinois Hydrogeology program (affiliated with the National Center for Supercomputing Applications). The original database was compiled as part of the EQ3/EQ6 code, and has been updated for incorporation in React. The database is remarkably broad, and contains data for numerous actinide species. Initially, the calculations were performed by hand; the calculations were also run on the computer program, and the results were in agreement. Both sets of analyses were independently corroborated.

If we assume the oxygen content of the water reflects saturation with the atmosphere, we obtain a[HF] = $10^{2.5[illegible]}$ for the reaction in Equation 1, and $10^{3.995}$ for Equation 2. These are absurd concentrations, indicating that the reactions would proceed very strongly to the right, producing four moles of HF for every mole of the original UF_4. We performed the calculations for a range of temperatures, and much lower oxygen fugacities; the outlook was the same for all cases, with conversion of UF_4 to oxides or hydrous oxides, plus HF. The conclusion of this evaluation is that while UF_4 can be metastably dissolved in water up to its solubility limit, the subsequent hydrolysis of the dissolved fluoride complex seems inevitable.

Thermochemical calculations can say nothing about the rate of reactions. A brief literature search in the time available for this report did not turn up any data on pertinent reaction rates. Lemons *et al.* [1990] state that the reaction is slow, but this assessment presumably relates to conventional laboratory time scales, perhaps with complete reaction occurring over several days to months. This suggests that on the long time scales of performance assessment, the reaction will proceed to completion. To a large extent, the rate of reaction may be controlled by the rate at which water becomes accessible to the waste. The water flow rate may in turn be affected by the reaction rate, since the reaction products can degrade the containment structure. The potential therefore exists for a very rapid vicious cycle to begin, in which some reaction leads to some degradation of containment, which in turn leads to more rapid reaction. The likelihood of this type of release is somewhat speculative, since details are unavailable at this time about actual reaction rates under disposal conditions, and about the proposed conditions (location and design) of the disposal facility. Nevertheless, this kind of rapid containment failure cannot be eliminated from consideration without appropriate justification.

It is clear that the reactivity of the waste introduces a large uncertainty in release rates of the waste from the disposal facility. Most uranium oxides are sparingly soluble in neutral solution, but much more soluble in acidic solution. Consequently, it appears that the production of HF can potentially increase release rates by both degrading the engineered containment and increasing solubilities. The magnitude of these effects will depend greatly on site-specific and design-specific conditions; for the purposes of this preliminary evaluation, we must make conservative assumptions.

1.3 Disposal Facility

The license applicant has proposed to store the waste onsite during the economic lifetime of the facility. It is therefore probable that the currently proposed Nebraska disposal facility will be closed by the time the waste is due for disposal. The location of future sites within the Central Interstate Compact have not been determined. Since no specific disposal site can be identified at this time, the performance assessment will have to be based on hypothetical disposal site characteristics. We have assumed disposal site characteristics based on the humid southeast case study presented in Appendix E of the Draft Environmental Impact Statement for 10 CFR Part 61 (DEIS) [NRC, 1981].[1]

Additional assumptions about the facility in the analysis are as follows.

- Credit for the cover and any engineered barriers shall only be given during institutional control (the first 100 years). In part, this approach results from the uncertainty introduced by the reactive waste, which may conceivably produce enough HF to dissolve backfill materials and produce significant subsidence.

[1] The reader will note that the calculation approaches used in developing the EIS for 10 CFR Part 61 are described in detail in the DEIS, and only referenced in the final EIS. Consequently, we refer to approaches used in the DEIS for the sake of clarity, but these approaches were used in the final EIS as well.

- Unlike the facility described in the DEIS, trench type disposal units will not be considered, since the Central Interstate Compact requires above-grade disposal. Consequently, the facility will be considered to be an earth-mounded tumulus disposal facility. The tumulus shall be considered to be 30 feet high at the center, with a 4 foot clay cover. This facility is the above-grade equivalent of the trenches analyzed for the EIS.

- Ground-water transport analyses will consider the dose to an individual drinking from a boundary well.

1.4 Modeling Approaches

The EIS for 10 CFR Part 61 was developed using the Impacts Analysis Methodology [Oztunali *et al.*, 1981]. Subsequent developments in the Impacts suite of computer codes are the update of the original Impacts Analysis Methodology [Oztunali and Roles, 1986], and the variations (generally identified as IMPACTS-BRC) developed for evaluation of Below-Regulatory Concern waste [Oztunali and Roles, 1984; Forstom and Goode, 1986; O'Neal and Lee, 1990; Rao *et al.*, 1992]. These codes are all based on the same underlying principles and contain the same phenomenological models for the conditions of interest in this report. All of these reports will therefore be treated as source documents for identifying appropriate assumptions for the intrusion analyses. However, the recent evaluation of the code by Rao *et al.* [1992] has suggested that alternative approaches are needed for the geosphere modeling to evaluate off-site exposures. Consequently, we shall use models in the current NRC/SNL low-level waste performance assessment methodology for evaluation of off-site exposures [Kozak *et al.*, 1990b]. Other models needed for this analysis will be described as appropriate.

2.0 Intruder Scenarios

The intruder scenarios used here have been adopted from the DEIS [NRC, 1981]. As appropriate, parameters and models are identical to the conditions used in the DEIS. However, there are several additional considerations that play a role in the intrusion analyses of depleted uranium wastes. First, and foremost, is the issue of the time frame of the analysis. 10 CFR Part 61 was developed using the concept that the vast majority of the waste would decay to insignificant levels during the first 100-500 years. In contrast, the radiological content of depleted uranium increases continuously for about 2 million years as a result of ingrowth of daughter products. Second, the dosimetry used in this report is consistent with the currently accepted standard dosimetry model of the International Council on Radiation Protection (ICRP); the EIS for 10 CFR Part 61 was developed using the previous ICRP standard dosimetry methodology. Dose conversion factors used in this report have all been adopted from Eckerman *et al.* [1988], which is considered a standard work for dose conversion factor values.

It is assumed for the purposes of the intruder analyses in this report that none of the initial inventory migrates from its initial position. This is a conservative assumption for these analyses, since if the uranium or its daughters migrate away from the disposal site through the ground-water pathway, onsite impacts would be reduced.

2.1 Intruder-Construction Scenario

The intruder-construction intruder models and parameters have been adopted verbatim from the DEIS [NRC, 1981]. Intrusion analyses in the Impacts suite of codes are calculated using the equation

$$H = \sum_n [(f_0 f_d f_w f_t)_{air} C_w PDCF\text{-}2 + (f_0 f_d f_w f_t)_{DC} C_w PDCF\text{-}5], \tag{5}$$

where PDCF-2 and PDCF-5 are the pathway dose conversion factors for exposure to suspended particulates and direct (volumetric) gamma radiation, respectively, f_0 is a decay factor, f_d is a dilution factor of waste with surrounding soil, f_w is an "accessibility factor" to account for the presence of waste containers, f_t is an exposure factor that differs for direct exposures and air pathways, and C_w is the concentration in the waste [Oztunali and Roles, 1984]. The pathway dose conversion factor approach is described in Oztunali *et al.*, 1981 and Oztunali and Roles [1984].

We begin by evaluating the most important pathway among those included in Equation 5: the inhalation of suspended particulate matter during operation of heavy machinery at the site. For the sake of clarity, we repose the dose analysis as

$$H_{inhale} = \sum_n \frac{C_w(t) M V \tau}{\rho D} DCF_{n,inhale}, \tag{6}$$

where M is the mass loading of particulates in air (g/m^3), ρ is the density of disturbed soil, V is the volumetric inhalation rate of the intruder (m^3/yr), τ is the fraction of the year spent at the site, D is the volume of waste plus backfill soil divided by the volume of waste (a unitless dilution factor), and $DCF_{n,inhale}$ is the fundamental dose conversion factor for radionuclide n by the inhalation pathway. The waste concentration C_w has been rewritten as a function of time to indicate the corrections for decay and ingrowth. This equation is the same as that used in the IMPACTS code for this analysis: f_t in Equation 5 corresponds to $M\tau/\rho$ in Equation 6, and f_d corresponds to 1/D. Equation 6 only describes doses from resuspended particulates. Gaseous releases (and the associated dose) of radon are neglected in this scenario.

Oztunali and Roles [1986] give an arbitrary range of 0.1-1.0 for f_w, in which 1.0 corresponds to no credit for waste form. We have chosen not to take credit for waste form, given the duration of the analyses; after thousands of years credit cannot be taken for either the containers (presumed to be 55 gallon drums), or for a vault, if one is present. Oztunali and Roles and O'Neal and Lee [1990] give values for the remaining parameters for use in Equation 6, and these are summarized in Table 5 for the South [illegible] reference site.

Fundamental dose conversion factors were identified from Eckerman *et al.* [1988]; the values used were checked for consistency against the values cited by O'Neal and Lee [1990] and

Rao *et al.* [1992] for use in IMPACTS-BRC. When dose conversion factors were cited in Eckerman *et al.* for multiple Classes and lung clearance factors, the value most conservative for the bone surface dose was used. For the uranium compounds the Class D dose conversion factors were used. UF_4 is considered to be a Class W compound [Eckerman *et al.*, 1988; Lemons *et al.*, 1990], but the potential exists for UF_4 to react to other compounds with different metabolic behavior. In particular, it is possible under ground-water conditions for UF_4 to react to UO_2F_2, which is a Class D solubility compound [Eckerman *et al.*, 1988]. The daughter products are assumed to be fluorides or oxyfluorides, and the most conservative solubility class is appropriate for these compounds for each daughter [Eckerman *et al.*, 1988]. In summary, we have used deliberately conservative dose conversion factors for uranium compounds to account for the uncertainty in their chemical form, but have used appropriate values for the probable (non-oxide) chemical forms of the daughter radionuclides.

Oztunali and Roles [1986] discuss soil dilution factors for this scenario as indicative of dilution as emplaced. That is, these are indicative of a mixture of waste and backfill, and do not include dilution by the cover material. In the DEIS (page 5-34) it is stated that it is unlikely that emplacement efficiencies, f_d, greater than 0.75 can be achieved in practice. The base case emplacement efficiency used in the DEIS (presumably for tip disposal) was 0.5. This means that the dilution factor, D, of waste in backfill needed for this analysis should range 1.3 - 2.0. We assume poor packing efficiency of waste packages in the disposal units, and use the larger of these dilution factors. This is *not* a conservative assumption, but the difference between conservatism and nonconservatism is not great for this parameter.

Table 5 Parameters used in calculating inhalation exposures

Parameter	Value
M (mass loading factor)	5.65×10^{-4} (g/m^3)
r (fractional annual exposure)	0.057 (corresponds to 500 hours)
ρ (density of soil)	1.6 g/cc
V (inhalation rate)	8000 m^3/yr
D (soil dilution factor)	2.0 (m^3 emplaced waste/m^3 pure waste)

Oztunali and Roles [1986] suggest that values for M might range 2.6×10^{-4} g/m^3 to as much as 7.4×10^{-3} g/m^3 between humid and arid sites. The high end of this range could potentially be important if disposal is proposed for one of the more arid states in the Central Interstate Compact.

We have adopted the Impacts methodology approach to evaluating external exposures for this report. Exposures from direct gamma radiation are calculated in the Impacts methodology by the second term in Equation 5. This term can be reposed in our notation as

$$H_{\alpha} = \sum_{n} \frac{C_n(t) \cdot DCF3_n}{D}, \qquad (7)$$

where values from $DCF3_n$ are the dose conversion factors for exposure to a volume source of the contaminant. Values for $DCF3_n$ were calculated by the point-kernel method used in MICROSHIELD, and the values for each isotope are tabulated in O'Neal and Lee [1990]. These values are reproduced in Table 6. The external gamma dose-conversion factors add equally to the effective dose equivalent and to each organ [O'Neal and Lee, 1990]. Also, in this approach a quality factor of unity has been applied. Oztunali and Roles [1986] identified the values for f_e, f_w, and f_s that lead to Equation 7.

Table 6 External gamma exposure dose conversion factors used in the analysis [source: O'Neal and Lee, 1990]

Radionuclide (... includes all daughters out to radionuclide)	$DCF3_n$ including daughter contributions (mrem m^3/yr pCi)
Pb-210 (...Bi-210)	1.03×10^{-8}
Po-210	6.13×10^{-11}
Ra-226 (...Po-214)	1.24×10^{-5}
Ac-227 (...Po-215)	1.43×10^{-6}
Th-230	4.92×10^{-10}
Pa-231	1.70×10^{-7}
U-234	1.59×10^{-10}
U-235 (...Th-231)	6.41×10^{-7}
U-238 (...Pa-234m)	8.03×10^{-8}

Hand calculations performed on the area-source direct exposure (exposure to beta emissions) and air immersion exposure pathways included in Equation 5 showed these to be insignificant compared to external gamma and inhalation [illegible]ways. Consequently, to a close approximation, the total calculated dose resulting from the intruder-construction exposure is given by

$$H = H_{air} + H_{\alpha}. \qquad (8)$$

Decay and ingrowth of radionuclides was calculated using RADDECAY Version 3.01. It was assumed that the waste did not migrate by other exposure pathways prior to intrusion. Consequently, the radionuclide inventory is assumed to be undepleted by migration through ground-water or air-transport pathways. As a result of this assumption, waste concentrations for all radionuclides could be easily specified as a function of time. Several times of

intrusion were evaluated. First, intrusion was assumed to occur immediately, so that there was no time for ingrowth of daughters. This dose calculation represents the *minimum* intruder dose based on these assumptions. As daughters are produced at later times, the doses increase. Consequently, doses were also calculated for 10,000 years and for the conditions of maximum dose when the daughters are at equilibrium, which occurs first at about 2 million years.

The results from the analysis for the most significant long-lived radionuclides are shown in Tables 7 - 10. (Note that the total dose is calculated from all radionuclides in the chains, but the short-lived radionuclides provide an insignificant dose compared to the long-lived ones). The doses to the critical organ (the bone surface) are more significant than the effective dose equivalent. These dose estimates apply to UF_4 wastes, since we are applying conservative values of classes for dose conversion factors. Applying Class W dose conversion factors to uranium has relatively little effect on the doses, since the majority of the doses result from exposure to the daughters.

Different values for the mass loading factor, M, given by Oztunali and Roles [1986] could reduce the calculated doses by a factor of 2 (for other humid conditions) or increase them by a factor of 13 (for more arid conditions). If the pure waste bulk density is lower than the maximum, this can decrease assumed waste concentration (see Table 3), and the calculated doses can be decreased by about a factor of 2. Taking less credit for the soil dilution factor (smaller values of D) can increase the dose values by a factor of 1.5 at most. All of the remaining assumptions (which relate to exposure duration) were in the DEIS [NRC, 1981], and have been adopted here.

Table 7 Intruder-construction doses at the time of closure (t = 0). Contributions from short-lived daughters have been neglected. External doses are applied equally to all organs and to effective dose equivalent.

Radionuclide	Concentration in Wastes (Ci/m^3)	Contribution of External Dose (mrem/yr)	Total Dose to Bone Surface (mrem/yr)	Effective Dose Equivalent (mrem/yr)
U-234	0.427	1.94	1392	96
U-235	0.0184	336	395	340
U-238	1.15	2.63×10^3	5980	2860
totals		2970	7770	3300

Table 8 Intruder-construction doses at 100 years. Contributions from short-lived daughters have been neglected. External doses are applied equally to all organs and to effective dose equivalent.

Radionuclide	Concentration in Wastes (Ci/m^3)	Contribution of External Dose (mrem/yr)	Total Dose to Bone Surface (mrem/yr)	Effective Dose Equivalent (mrem/yr)
U-234	0.430	2	1400	96
U-235	0.0184	336	391	340
U-238	1.15	2.63×10^{3}	5980	2.86×10^{3}
Th-230	3.83×10^{-3}	0.05	2.47×10^{3}	101
Ra-226	7.22×10^{-4}	255	257	256
Pb-210	6.82×10^{-4}	0.2	11	1
Po-210	6.80×10^{-4}	1×10^{-3}	0.03	0.5
Pa-231	3.85×10^{-4}	2	1.0×10^{3}	42
Ac-227	3.73×10^{-4}	15	9.16×10^{2}	67
Th-227	3.68×10^{-4}	0	3.2	0.5
totals		3.24×10^{3}	1.24×10^{4}	3.76×10^{3}

Table 9 Intruder-construction doses at 10,000 years. Contributions from short-lived daughters have been neglected. External doses are applied equally to all organs and to effective dose equivalent.

Radionuclide	Concentration in Wastes (Ci/m^3)	Contribution of External Dose (mrem/yr)	Dose to Bone Surface (mrem/yr)	Effective Dose Equivalent (mrem/yr)
U-234	0.447	2	1450	100
U-235	0.0184	336	391	340
U-238	1.15	2.63×10^{3}	5.98×10^{3}	2.86×10^{3}
Th-230	6.8×10^{-2}	1	4.4×10^{4}	1.78×10^{3}
Ra-226	2.92×10^{-2}	1.03×10^{4}	1.04×10^{4}	1.03×10^{4}
Pb-210	2.92×10^{-2}	9	485	40
Po-210	2.92×10^{-2}	0.05	1.2	20
Pa-231	3.5×10^{-3}	17	9.10×10^{3}	380
Ac-227	3.5×10^{-3}	143	8.59×10^{3}	628
Th-227	3.5×10^{-3}	0	31	4
totals		1.35×10^{4}	8.02×10^{4}	1.65×10^{4}

Table 10 Intruder-construction doses at the time of secular equilibrium ($t = 2x10^6$ yrs). Contributions from short-lived daughters have been neglected. External doses are applied equally to all organs and to effective dose equivalent.

Radionuclide	Concentration in Wastes (Ci/m^3)	Contribution of External Dose (mrem/yr)	Dose to Bone Surface (mrem/yr)	Effective Dose Equivalent (mrem/yr)
U-234	1.14	$2.63x10^3$	$3.71x10^3$	256
U-235	0.0184	336	391	340
U-238	1.15	5.2	$5.98x10^3$	$2.86x10^3$
Th-230	1.14	16	$7.35x10^5$	$2.99x10^4$
Ra-226	1.14	$4.03x10^5$	$4.06x10^5$	$4.04x10^5$
Pb-210	1.14	335	$1.86x10^4$	$1.58x10^3$
Po-210	1.14	2	45	790
Pa-231	0.018	87	$4.68x10^4$	$1.95x10^3$
Ac-227	0.018	734	$4.36x10^4$	$3.23x10^3$
Th-227	0.018	0	158	22
totals		$4.07x10^5$	$1.26x10^6$	$4.46x10^5$

For U_3O_8 waste, Class Y dose conversion factors should be used rather than Class D factors [Eckerman *et al.*, 1988]. Furthermore, all of the daughter products can be expected to be in oxide or hydroxide form, which suggests the use of different dose conversion factors for protactinium (class Y), thorium (class Y), polonium (class W), and actinium (class Y) [Eckerman *et al.*, 1988]. Recalculating the doses for U_3O_8 wastes using these dose conversion factors produces the results shown in Tables 11 to 14.

Table 11 Intruder-construction doses at the time of closure ($t = 0$) for U_3O_8 waste. Contributions from short-lived daughters have been neglected. External doses are applied equally to all organs and to effective dose equivalent.

Isotope	Waste Conc. (Ci/m^3)	External dose (mrem/yr)	Dose to Epithelium (mrem/yr)	Dose to Bone Surface (mrem/yr)	EDE (mrem/yr)
U-234	0.427	2	$3.79x10^4$	146	$4.56x10^3$
U-235	0.0184	336	$1.85x10^3$	342	518
U-238	1.15	$2.63x10^3$	$9.38x10^4$	$2.98x10^3$	$1.36x10^4$
totals		$2.97x10^3$	$1.34x10^5$	$3.47x10^3$	$1.87x10^4$

Table 12 Intruder-construction doses at 1000 years after closure for U_3O_8 waste. Contributions from short-lived daughters have been neglected. External doses are applied equally to all organs and to effective dose equivalent.

Isotope	Waste Conc. (Ci/m^3)	External dose (mrem/yr)	Dose to Epithelium (mrem/yr)	Dose to Bone Surface (mrem/yr)	EDE (mrem/yr)
U-234	0.430	2	$3.82x10^4$	147	$4.59x10^3$
U-235	0.0184	336	$1.85x10^3$	342	518
U-238	1.15	$2.63x10^3$	$9.34x10^4$	$2.98x10^3$	$1.36x10^4$
Th-230	$3.83x10^{-3}$	0.06	343	$2.47x10^3$	81
Ra-226	$7.22x10^{-4}$	255	259	257	256
Pb-210	$6.82x10^{-4}$	0.2	0.3	11	0.9
Po-210	[illegible].80x10^{-4}$	10^{-3}	3	0.03	0.5
Pa-231	$3.85x10^{-4}$	2	88	$1.0x10^3$	29
Ac-227	$3.73x10^{-4}$	15	186	916	54
Th-227	$3.68x10^{-4}$	0	4	3	0.5
		$3.24x10^3$	$1.35x10^5$	$8.12x10^3$	$1.91x10^4$

Table 13 Intruder-construction doses at 10,000 years for U_3O_8 waste. Contributions from short-lived daughters have been neglected. External doses are applied equally to all organs and to effective dose equivalent.

Isotope	Waste Conc. (Ci/m^3)	External dose (mrem/yr)	Dose to Epithelium (mrem/yr)	Dose to Bone Surface (mrem/yr)	EDE (mrem/yr)
U-234	0.447	2	$3.97x10^4$	153	$4.77x10^3$
U-235	0.0184	336	$1.85x10^3$	342	518
U-238	1.15	$2.63x10^3$	$9.38x10^4$	$2.98x10^3$	$1.36x10^4$
Th-230	$6.8x10^{-2}$	1	$6.08x10^3$	$4.38x10^4$	$1.43x10^3$
Ra-226	$2.9x10^{-2}$	$1.03x10^4$	$1.05x10^4$	$1.04x10^4$	$1.03x10^4$
Pb-210	$2.9x10^{-2}$	9	11	485	41
Po-210	$2.9x10^{-2}$	0.05	113	1	20
Pa-231	$3.5x10^{-3}$	17	$1.75x10^3$	$9.09x10^3$	259
Ac-227	$3.5x10^{-3}$	143	37	$8.59x10^3$	507
Th-227	$3.5x10^{-3}$	0	0	3.	5
		$1.35x10^4$	$1.55x10^5$	$7.59x10^4$	$3.15x10^4$

Table 14 Intruder-construction doses at the time of secular equilibrium ($t = 2x10^6$ yrs) for U_3O_8 waste. Smaller dose conversion factors can be justified in this case. Contributions from short-lived daughters have been neglected.

Isotope	Waste Conc. (Ci/m^3)	External dose (mrem/yr)	Dose to Epithelium (mrem/yr)	Dose to Bone Surface (mrem/yr)	EDE (mrem/yr)
U-234	0.447	5	$1.01x10^5$	389	$1.22x10^4$
U-235	0.0184	336	$1.85x10^3$	342	518
U-238	1.15	$2.63x10^3$	$9.38x10^4$	$2.98x10^3$	$1.36x10^4$
Th-230	1.14	16	$1.02x10^5$	$7.34x10^5$	$2.40x10^4$
Ra-226	1.14	$4.03x10^5$	$4.09x10^5$	$4.06x10^5$	$4.04x10^5$
Pb-210	1.14	335	443	$1.89x10^4$	$1.58x10^3$
Po-210	1.14	2	$4.42x10^3$	45	790
Pa-231	0.018	87	$4.10x10^3$	$4.68x10^4$	$1.33x10^3$
Ac-227	0.018	734	$9.00x10^3$	$4.42x10^4$	$2.61x10^3$
Th-227	0.018	0	192	158	23
		$4.07x10^5$	$7.26x10^5$	$1.25x10^6$	$4.61x10^5$

The intruder-construction doses for the U_3O_8 waste form show different behavior from the UF_4 waste form; the oxide waste produces higher doses to the lung epithelium than the bone surface except at very long times in the future. Inspection of the dose conversion factors in Eckerman *et al.* [1988] suggest that the insoluble oxides of uranium and thorium are retained much more in the lung, producing much higher lung doses than more soluble forms produce. These lung doses and a longer retention time in the body contribute to higher committed effective doses for the U_3O_8 waste form. Bone doses are correspondingly lower, since less contaminant is absorbed into the body.

2.2 Intruder-Agriculture Scenario

The intruder-agriculture scenario has also been adopted verbatim from the DEIS [NRC, 1981]. In the intruder-agriculture scenario, a person lives in the house built in the intruder construction scenario. The intruder receives doses by the pathways analyzed in the construction scenario, but in addition is exposed to food grown in the contaminated soil.

The intruder-agriculture exposures are calculated in the Impacts approach using the equation

$$H = \sum_n [(f_0 f_d f_w f_s)_{air} C_n PDCF\text{-}3 + (f_0 f_d f_w f_s)_{food} C_n PDCF\text{-}4 + (f_0 f_d f_w f_s)_{DC} C_n PDCF\text{-}5] \quad (9)$$

where the terms in the equation are defined as previously. Equation 9 accounts for exposures by five pathways [Oztunali and Roles, 1986]. These pathways are (1) inhalation of contaminated dust, (2) direct radiation from standing in a contaminated cloud, (3) consumption of food grown in the contaminated soil, (4) consumption of food dusted by settling particulates, and (5) direct radiation exposure from the disposed waste volume. Again, we have reposed this equation into its pathway components for conceptual clarity, and have adopted parameter values used in the Impacts approach and the EIS.

Oztunali and Roles [1984] identify the soil dilution factors for this scenario as including the dilution a[illegible]placed plus the dilution with cover material and surrounding soil. It is clear that th[illegible] large uncertainty in this parameter. We choose to adopt the 0.25 cover mixing efficie[illegible] calculated by Oztunali and Roles [1984] for a 2 meter thick cover. This leads to a four-fold dilution of the waste for this scenario over the dilution used in the intruder-construction scenario. That is, D = 8 for this scenario. This dilution is the result of diluting waste with cover material during excavation of the site.

The pathway for inhalation of suspended particulates is evaluated using Equation 6. In the intruder-agriculture scenario, however, there are three distinct exposure times, which affect the value of the product $M\tau$ in Equation 6. The intruder is assumed to spend 100 hours in gardening, during which the resuspension factor used in the construction analysis is recommended [Oztunali and Roles, 1986]. The intruder is also assumed to spend 1700 hours outdoors, during which a resuspension factor of 10^{-4} g/m^3 is recommended, and 4348 hours indoors, to which $M = 5\times10^{-5}$ g/m^3 is applied [Oztunali and Roles, 1986]. Adding these values leads to an effective value of $M\tau$ to be used in Equation 6 of $(M\tau)_{eff} = 5.06\times10^{-5}$ g/m[illegible] For comparison, in the int[illegible]-con[illegible]ction analysis this product was equal to 3.22×10^{-5} g/m^3. The intruder-agriculture value is larger than the intruder-construction value owing to the longer exposure duration.

The food ingestion pathway includes the concentration in and on the plants as a result of uptake through the roots and deposition of particulates on the plant surfaces. The ingestion dose is represented in the Impacts methodology by the equation

$$H_{ingest} = \sum_n \frac{C_n(t)DCF_{ingest}}{2D_p}\left[PT_n + \frac{PTP_n MRV}{SC}\right], \tag{10}$$

where PT_n is the total soil-to-plant-to-man factor for the isotope. PTP_n is the total plant to man transfer factor, V is the settling velocity of the particulates, S is the fraction of activity initially deposited removed by weathering, R is the fraction initially deposited that is retained by the foliage, and M is again the resuspension factor. Ingestion dose conversion factors for these elements are less variable than the inhalation dose conversion factors. Uranium has two classifications, and the remaining elements only have one. The conservative ingestion dose conversion factors for uranium should be used for all compounds expected under disposal conditions except U_3O_8 and UO_2 [Eckerman *et al.*, 1988]. The factor of 2 enters the denominator owing to an assumption that half of the exposed person's food is produced onsite. The parameters PT_n and PTP_n account for exposure from ingesting vegetables, beef, and milk, and these are calculated using the parameters given by O'Neal

and Lee [1990]. Values for PT_a and PTP_a for each element are listed in Table 16.

Table 15 Parameters used in the intruder-agriculture scenario

Parameter	Value
C	1 kg/m^2
R	0.25
S	4.83x10^{-2} day^{-1}
M	10^{-4} g/m^3
V	69 m/day

Table 16 Element-specific values for PT and PTP

Element	PT (kg/yr)	PTP (kg/yr)
U	0.487	195
Th	0.802	191
Ra	2.74	196
Pb	0.776	194
Po	0.055	211
Pa	1.43	570
Ac	1.19	475

The direct gamma pathway for the intruder-agriculture scenario is calculated using Equation 7, as in the intruder-construction scenario. In this case, however, the value for τ is specified to be 0.27, which accounts for geometrical effects not used in the intruder-construction analysis, and for exposure durations of 1800 hours outdoors (gardening plus ordinary outdoors) and 4380 hours indoors. The outdoor exposures are assumed to be unattenuated by the presence of the house foundation, and the indoor exposures are assumed to be attenuated. All these effects are accounted for by assigning a value of 0.27 to τ in Equation 7 [Oztunali and Roles, 1986].

Oztunali and Roles [1986] suggested that radon doses should be incorporated into the intruder-agriculture scenario using the radon release evaluation developed for uranium mill tailing disposal [NRC, 1980]. The general idea of this exposure pathway is that radon produced as a decay product diffuses upward through the basement slab, and mixes well with the air in the house. In this approach, radon flux at the ground surface is calculated using the equation

$$j_{Rn,surface} = C_{Ra,soil}\epsilon[\lambda D/P]^{1/2}, \tag{11}$$

where λ is the radon decay constant (2.1x10^{-6} s^{-1}), ϵ is the emanating power (0.2), $C_{Ra,soil}$ is the concentration of radium-226 in soil (Ci/m^3), D is the effective diffusion coefficient of radon, and P is the porosity of the basement slab. NRC [1980] noted that the parameter

D/P is crucial to the assessment of radon transport, and Oztunali and Roles [1986] suggest, $D/P = 6.0 \times 10^{-9}$ m^2/s. However, it should be noted that current thinking about radon exhalation into houses suggests that it is dominated by convective gas flow in the subsurface; measured radon concentrations in houses are too high to be explained by diffusion through the slab [Nazaroff, 1992]. Consequently, releases into the house calculated from the diffusion equation may produce low estimates of the radon flux into the house. Releases into the house may potentially be an order of magnitude or higher than those used in this report. Furthermore, the emanating power is highly variable, and is likely to be larger than 0.2 for a humid site, since it increased with increasing moisture content of the soil [NCRP, 1989].

Air concentrations in the house can be calculated assuming the house to be well mixed from the equation [NCRP, 1989]

$$C_{radon} = j_{Rn\,surface} \frac{A}{V_{house}(\lambda_{Rn} + I_v)},$$

where A is the area of the basement slab (assumed to be 200 m^2), I_v is the ventilation rate of the house (which typically ranges 0.5 - 2.0 hr^{-1} [NCRP, 1989], and V_{house} is the volume of the house (assumed to be 500 m^3). The dimensions of the house have been chosen to be consistent with NRC [1981].

Radon gas is not readily absorbed or deposited in the lung, and does not provide a significant dose through the inhalation pathway. The primary concern related to inhalation of radon gas is the dose received from short-lived daughter radionuclides that can be produced in the lung [NRC, 1980]. Radon daughters produced in air quickly attach to aerosols and to respiratory surfaces [NRC, 1980]. Consequently, concentrations of daughters are typically somewhat lower than their equilibrium concentrations. The departure from equilibrium is commonly called the equilibrium factor, F, which relates the alpha energy of the mixture of daughters to the alpha energy of an equilibrium mixture [NCRP, 1988]. A simple approximation to the dosimetry of radon daughters is to calculate the dose from an equilibrium mixture of daughters, then multiply the dose by the equilibrium factor. Indoor equilibrium factors are commonly between 0.1 and 0.5, but values outside of this range have been observed [NCRP, 1988]. Dose conversion factors for radon daughters are not commonly given in standard form in the literature, and Eckermann *et al.* [1988] only identify dose conversion factors for Pb-214 and Bi-214: their sum is 1.04×10^8 mrem/Ci, but this neglects contributions from Po-218 and Po-214. NCRP [1987] suggests that 0.004 Working Levels (an equilibrium equivalent concentration of 15 Bq/m^3) produces 24,000 $\mu Sv/yr$ to the bronchial epithelium, but it is not clear whether this value refers to a uranium mine worker or to a population dose (contrast pages 104 and 141 in NCRP, 1987). Assuming that the dose rate refers to a maximum individual, and assuming an inhalation rate of 8000 m^3/yr leads to an inhalation dose conversion factor of 7.4×10^8 mrem/Ci from all short-lived daughters. Note that differing assumptions, such as a lower inhalation rate, produce higher dose conversion factors. We have not attempted to be as conservative as possible in estimating this dose conversion factor. This dose conversion factor is used for all radon

inhalation dose calculations in this report. It has been assumed for this scenario that the occupant of the house spends 4380 hours indoors, and outdoor doses are neglected.

Radon doses from air immersion can be calculated from the equation

$$H_{Rn} = C_{Rn,air}\tau DCF_{Rn,immerse} \tag{13}$$

where τ is the fraction of time assumed to be spent indoors (0.5) and $DCF_{Rn,immerse}$ is the radon dose conversion factor for immersion in air. O'Neal and Lee give the dose conversion factors as 1.99×10^{-6} (mrem m^3/pCi yr) for the bone surface and 1.95×10^{-6} (mrem m^3/pCi yr) effective dose equivalent.

The total exposure from the intruder-agriculture scenario is the sum of the exposures by ingestion, inhalation, and external exposure. As in the intruder-construction analysis, the method recommended by O'Neil and Lee [1990] is to add the external dose equally to the individual organ doses as well as to the effective dose equivalent. Radon doses for air immersion were found to be negligible compared to doses from the other pathways, but doses from inhalation of radon were large enough that they are separated out, and are presented in Table 17. The variation in dose reflects the ranges of the ventilation rate and equilibrium factor, but not the variability in the flux of radon out of the soil. As discussed above, the radon flux used for these calculations is believed to be relatively low, since it is based on diffusion-controlled release. The calculated doses from the intruder-agriculture scenario are given in Tables 18 to 21 for times of intrusion 0, 1000, 10000, and 2×10^6 years (the time of equilibrium).

Table 17 Lung doses from exposure to radon-222 daughter products.

Time of exposure	Radium concentration (Ci/m^3)	Nonconservative Lung Inhalation Dose (mrem/yr)	Conservative Lung Inhalation Dose (mrem/yr)
1000	1.9×10^{-6}	8.9	172
5000	1.64×10^{-4}	754	1.5×10^{4}
10,000	9.12×10^{-4}	4186	8.2×10^{4}
50,000	2.78×10^{-2}	1.27×10^{5}	2.5×10^{6}
2,000,000	1.14	5.23×10^{6}	1.0×10^{8}

Table 18 Intruder-agriculture doses at the time of closure (t = 0). Contributions from short-lived daughters have been neglected.

Radionuclide	Concentration in Wastes (Ci/m^3)	Dose to Bone Surface (mrem/yr)	Effective Dose Equivalent (mrem/yr)
U-234	0.427	3.50×10^4	2.37×10^3
U-235	0.0184	1.80×10^3	4.94×10^2
U-238	1.15	8.75×10^4	8.87×10^3
totals		1.24×10^5	1.17×10^4

Table 19 Intruder-agriculture doses at 1,000 years. Contributions from short-lived daughters have been neglected.

Radionuclide	Concentration in Wastes (Ci/m^3)	Dose to Bone Surface (mrem/yr)	Effective Dose Equivalent (mrem/yr)
U-234	0.43	3.53×10^4	2.39×10^3
U-235	0.0184	1.80×10^3	494
U-238	1.15	8.75×10^4	2.39×10^3
Th-230	3.83×10^{-3}	3.58×10^3	106
Ra-226	7.22×10^{-4}	2.26×10^3	404
Pb-210	6.82×10^{-4}	1.67×10^3	113
Po-210	6.80×10^{-4}	0.5	3
Pa-231	3.85×10^{-4}	6.19×10^3	248
Ac-227	3.73×10^{-4}	4.74×10^3	286
Th-227	3.68×10^{-4}	4	0.6
		1.42×10^5	1.29×10^4

Table 20 Intruder-agriculture doses at 10,000 years. Contributions from short-lived daughters have been neglected.

Radionuclide	Concentration in Wastes (Ci/m^3)	Dose to Bone Surface (mrem/yr)	Effective Dose Equivalent (mrem/yr)
U-234	0.447	3.67×10^4	2.48×10^3
U-235	0.0184	1.80×10^3	4.94×10^2
U-238	1.15	8.75×10^4	8.87×10^3
Th-230	6.8×10^{-2}	3.30×10^4	1.35×10^3
Ra-226	2.92×10^{-2}	9.15×10^4	1.64×10^4
Pb-210	2.92×10^{-2}	7.11×10^4	4.77×10^3
Po-210	2.92×10^{-2}	2.20×10^1	1.42×10^2
Pa-231	3.5×10^{-3}	4.14×10^4	1.66×10^3
Ac-227	3.5×10^{-3}	4.45×10^4	2.68×10^3
Th-227	3.5×10^{-3}	3.95×10^1	5.85×10^0
totals		4.08×10^5	3.88×10^4

Table 21 Intruder-agriculture doses at the time of secular equilibrium ($t_i = 2x10^6$ yrs). Contributions from short-lived daughters have been neglected.

Radionuclide	Concentration in Wastes (Ci/m^3)	Dose to Bone Surface (mrem/yr)	Effective Dose Equivalent (mrem/yr)
U-234	1.14	$9.38x10^4$	$6.35x10^3$
U-235	0.0184	$1.80x10^3$	$4.94x10^2$
U-238	1.15	$8.75x10^4$	$8.87x10^3$
Th-230	1.14	$7.69x10^5$	$3.16x10^4$
Ra-226	1.14	$3.59x10^6$	$6.39x10^5$
Pb-210	1.14	$2.80x10^6$	$1.89x10^5$
Po-210	1.14	$8.69x10^2$	$5.61x10^3$
Pa-231	0.018	$2.95x10^5$	$1.19x10^4$
Ac-227	0.018	$2.34x10^5$	$1.40x10^4$
Th-227	0.018	$2.06x10^2$	$3.05x10^1$
totals		$7.87x10^6$	$9.07x10^5$

The majority of these doses result from the ingestion pathway. Doses calculated for disposal of U_3O_8 require using lower ingestion dose conversion factors for uranium, but not for any of the daughters. Consequently, disposal of the waste as U_3O_8 would reduce the initial doses (time = 0), but would not significantly affect doses at later times, when most of the dose results from exposure to daughter radionuclides. Consequently, we have not reported separate results for U_3O_8 waste for this scenario.

It is worth restating that these dose summaries for the intruder-agriculture scenario do not include the radon doses in Table 17. The reasons for separating radon doses from the others are twofold. First, radon was not treated using this methodology in NRC [1981]. Typical low-level waste inventories have sufficiently small inventories of radon parents that radon is very unlikely to produce significant doses. Second, radon doses are negligible compared to ingestion doses at early times, and are overwhelmingly large compared to ingestion doses at long times in the future. Including the doses therefore masks the importance of the various pathways. Third, radon exposures can be calculated only for the bronchial epithelium (and weighted into the effective dose equivalent). The radon therefore affects a different critical organ than do the remaining radionuclides.

3.0 Off-site Exposures to Contaminated Ground Water

The purpose of this analysis is to perform a "generic" ground-water analysis to evaluate potential off-site impacts from disposal of large amounts of depleted uranium as Class A low-level waste. Ground-water analyses cannot in general be performed on a generic basis, since generic hydrological, geological, and geochemical conditions do not exist. Consequently, the analysis must be done for a particular set of conditions, with the assumption that these conditions are representative in some way of an important site-specific case. It is important in evaluating generic conditions that "screening" models should be

used; more complex, less conservative approaches are unjustified [IAEA, 1989]. However, in this report we present a range of possible conditions are used to provide alternative possible modeling approaches.

It is important to note that the types of modeling approaches used in this report are currently accepted models used in low-level waste performance assessment [Kozak *et al.*, 1990]. Projected low-level waste disposal facilities are currently being evaluated using these models. Therefore, the models used in this report should not be presumed to be unreasonably or exceptionally conservative.

3.1 Source-Term Analysis

We consider two conditions for the source term in this report. The first condition is the disposal (as proposed) of UF_4. However, as discussed above, the reactions of UF_4 with air and water introduce large uncertainties into the performance assessment. Most of the uncertainties related to the reactions tend to increase release rates for offsite exposures. The second condition considered here is the alternative of converting the waste to U_3O_8 prior to disposal. Under these conditions, the releases will be treated as being controlled by the solubility limit of U_3O_8 under disposal conditions.

We begin the source-term analysis by considering the volume required of the disposal facility. As described above, the UF_4 waste is expected to occupy 3.16×10^4 to 7.1×10^4 m^3, depending on the assumed bulk density of the waste, and the emplacement efficiency is expected to range 0.5 to 0.75. Consequently, the required volume of disposal capacity ranges 4.1×10^4 to 1.4×10^5 m^3, where the lower number relates to a dense waste that is efficiently emplaced, and the upper number is for low density waste that is mixed in a 1:1 ratio with backfill material.

We have assumed a 30 foot high tumulus, in which the waste is overlain by a 4 foot clay cover. We further assume that the waste is disposed of in a rectangular mass, as shown in Figure 1. The height of the waste is 26 feet (8 meters); the remaining two dimensions of the waste mass may be chosen arbitrarily, providing the product of the dimensions LW, provides the appropriate volume. We choose initially to examine a square facility such that L = W = 71 meters to 133 meters for the high density and low density wastes, respectively.

Solubility-limited release rates from this volume are calculated as

$$Q = S_0 KLW, \tag{14}$$

where Q is the overall release rate (Ci/yr), S_0 is the solubility limit of the compound (Ci/m^3), K is the hydraulic conductivity of the clay layer if the cover is intact, or the natural infiltration rate if the cover is disrupted (m/yr). Several assumptions are implicit in these interpretations of K. When the cover is intact, it is assumed that the only barrier to infiltration is the clay cover, that the clay is saturated with water, and that unit gradient conditions exist in the soil. For this report it is assumed that the cover material as emplaced in the field has a saturated conductivity of 10^{-7} cm/s. After some indefinite time, the cover

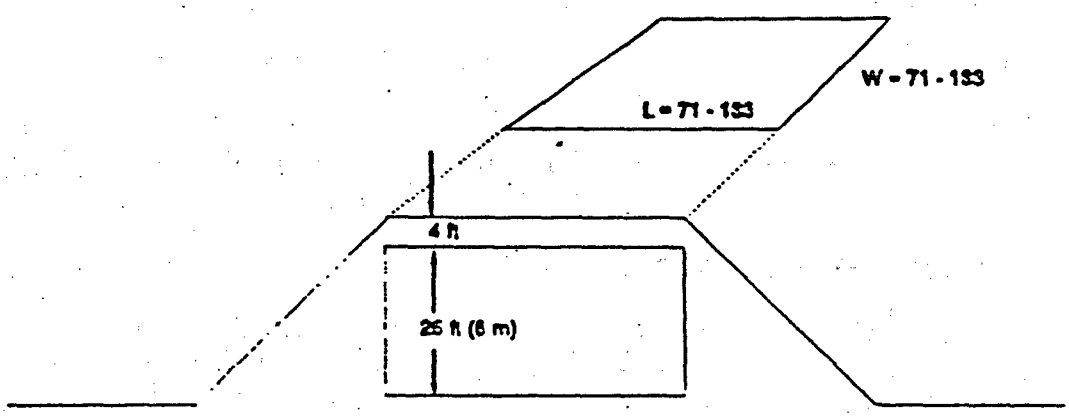

Figure 1: Design basis for the waste disposal cell.

will degrade by erosion, root and animal intrusion, or subsidence of the underlying materials; at some point the conductivity increases to the natural infiltration rate, and the clay cover no longer provides an inhibition to flow (note that this also includes an assumption that subsidence is not bad enough to cause increase infiltration over the natural local value). This increase in conductivity is assumed to occur as a step function at 100 years after closure of the facility. No credit is taken for performance of concrete vaults, if any are used at the facility.

It is interesting to note that assuming the facility fails after a short period of time is not necessarily conservative for depleted uranium wastes. If the waste is disposed of in vaults that exclude water for a long time before failing, the only effect will be to *increase* the radiological content of the waste, leading to increased offsite exposures when the releases eventually do begin. Delaying the onset of releases can only provide equal or greater doses when compared to the case when releases begin immediately.

We consider the following cases for evaluating the release rate from the waste

1. The reaction rate of UF_4 shall be assumed to be slow relative to the transport time scale between the disposal unit and the well. This case seems unlikely based on the discussion in Section 1.2 on UF_4 reactivity, but is considered a "best case" analysis of

UF_4 disposal. The UF_4 shall be assumed to be released according to its reported solubility limit of 0.1 g/liter [Leone *et al.*, 1978]. This solubility limit may potentially be different under disposal conditions, either higher or lower, but these differences cannot be evaluated on a generic basis.

2. UF_4 shall be assumed to react to produce a highly soluble reaction product. The waste will be assumed to be flushed out of the disposal unit by infiltrating water without allowing for a solubility limit. This analysis is considered a "worst case" analysis. However, we shall not account for the potential of subsidence and concomitant increased infiltration resulting from severe HF reactions with the disposal facility. In this sense this case is not a true "worst case" analysis.

3. The release rates for U_3O_8 and other oxide wastes shall be evaluated based on simple solubility limit considerations.

4. A more elaborate reaction pathway model is used to identify solubility limits based on some site-specific information.

3.2 Ground-Water Transport Analysis

The disposal site has been assumed to have the hydrological characteristics of the southeast reference site described in Appendix E of the DEIS. These characteristics are assumed to remain constant indefinitely, even though the analyses will be carried out to time periods in which this assumption is dubious, at best. Important characteristics of the site are shown in Figure 2. The waste site resides on a moderately permeable soil, which is underlain by high permeability limestone formations. The water table is about 12 to 17 meters deep at the site. The top of the limestone formation begins at about 25 meters below the surface. The depth to the clay aquitard (low-permeability layer) is about 40 meters. The reader is directed to the DEIS for more details of the site characteristics, including a more detailed stratigraphy. The ground-water velocity, porosity, and dispersivities were not identified in the DEIS, but Oztunali and Roles [1986], in their description of the southeast reference site, suggested parameter values for use in a simple transport model. The values suggested by Oztunali and Roles [1986] and the DEIS are shown in Table 22, and are adopted here as a base case analysis.

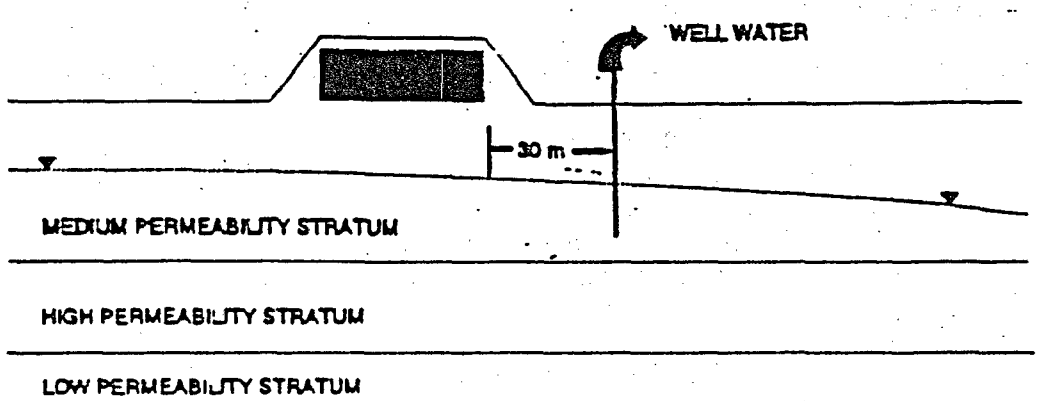

Figure 2: Characteristics of the disposal site described in NRC [1981].

Table 22 Base case parameter values used in the ground-water transport analysis [NRC, 1981; Oztunali and Roles, 1986].

Parameter	Value
Transport Velocity	1.25 m/yr
Porosity	0.25
Longitudinal Dispersivity	0.6 m
Transverse Dispersivity	0.06 m
Infiltration Rate	18 cm/yr
Moisture Content *	0.20
Aquifer Thickness **	18 m
Depth to Water Table **	12 m

* Value not identified in the references.
** Approximated from the stratigraphy given in the DEIS.

Transport through the unsaturated zone is assumed to take place without dispersion, in which case the unsaturated zone serves simply as a delay time prior to the onset of releases into the aquifer.

A boundary well is assumed to be drilled 100 feet (30 meters) from the edge of the waste volume. Concentrations are calculated at the well using two approaches. The first approach is to use the computer code PAGAN [Chu *et al*, 1991], which is a part of the current methodology for conducting performance assessments of low-level waste disposal facilities. The mathematics embodied in PAGAN have been discussed in detail by Kozak *et al* [1990a]; the assumptions are briefly reiterated here. PAGAN solves the convective-dispersion equation for constant Darcy velocity in a homogeneous, isotropic aquifer by performing a numerical integration in time of an analytical Green's function solution. The code has the following capabilities:

- rectangular volume source of arbitrary dimensions; this is projected to an area source at the water table,
- aquifer of cor[illegible] thickness,
- delay time in the unsaturated zone can be accounted for, along with the decay that occurs during that time,
- dispersion in the disposal unit treated using the mixing-cell cascade model,
- either a surface-wash or constant-rate leach model can be specified,
- simp[illegible] radionuclide decay (no chains) in the aquifer and source,
- radio[illegible]clide retardation in the aquifer,
- different dispersion coefficients in transverse and lateral directions,
- either well concentrations or surface-water concentrations can be evaluated,
- dose due to ingestion of contaminated water, and
- simple menu-driven input and on-screen graphics output.

The well concentration calculated using PAGAN is the plume centerline concentration at the water table. [illegible]s, it is the maximum concentration in the aquifer at the specified distance of the well; no credit is taken for dilution of water in the well by uncontaminated water. Furthermore, well drawdown is not analyzed. We c[illegible]ider this approach to modeling the well to be generally conservative, and to be appro[illegible]ate for the purpose of regulatory analysis. Kozak [1991] benchmarked PAGAN and VAM2D for a confined aquifer transport analysis, which provides verification that the codes have accurately solved the convective dispersion equation.

The second approach to calculating the radionuclide concentrations in the well is a deliberate extreme in nonconservatism. We assume that the entire water budget between the waste and the well dilutes the releases from the facility. This approach is depicted in Figure 3. The flow velocity through the top end of the box is 0.18 m/yr after failure of the cover at 100 years. The total volumetric flow rate is therefore 0.18WL, where W is the width of the waste, and L is the length of the waste plus the distance to the well (L = W + 30 for a square facility). The flow rate entering the left plane of the box in the aquifer is the design-basis Darcy velocity, 0.31 m/yr [Oztunali and Roles, 1986], times the cross-sectional area of the aquifer, which is 18 m deep. If the release rate is constant and solubility limited over a long time, and the contaminant is long lived, peak concentrati[illegible] leaving the well-mixed box are given by the peak release rate over the total volumetric flow rate leaving the box:

$$C_{well} = \frac{KS_0W^2}{V_{total}} = \frac{KS_0W}{11.0 + 0.18W}. \tag{15}$$

Note that for long-term constant release rates, the output concentration is independent of retardation. The retardation factor influences the time of arrival of the concentration, but not the magnitude of the concentration. Estimates of the retardation are only needed to estimate the ingrowth of daughter radionuclides, which increase the dose from the well.

This approach has been used for two main reasons. First, it provides a "best case" bound on the analysis. Given the source-term assumptions, it is unlikely that ground-water concentrations can be any *better* than those produced by this model. Second, some might argue that a one-dimensional aquifer transport model (such as PAGAN) is "overly" conservative, since the large infiltration rate is not accounted for in using one-dimensional flow. Use of the box model therefore provides an alternative viewpoint for assessing the conservatism of PAGAN for this case.

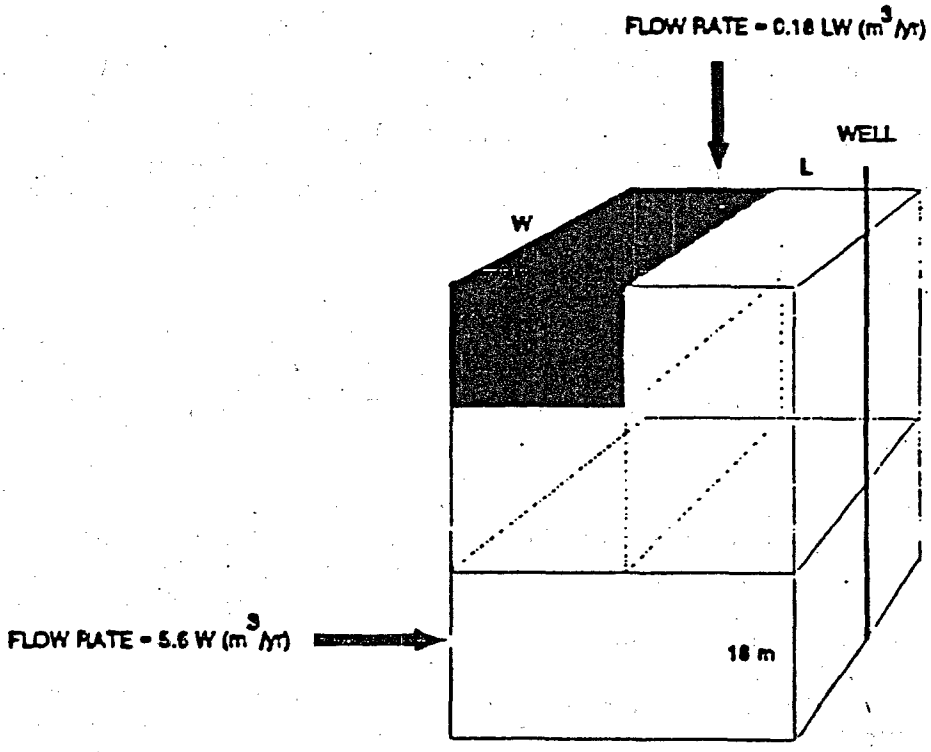

Figure 3: Nonconservative conceptual model for transport to the well.

It is not possible to specify retardation factors with confidence for generic conditions. Values for actinide sorption coefficients, K_d, cited in the literature range from zero to

thousands for differing conditions and assumptions, and there does not appear to be any way to reduce this range for a generic site. One can begin with an analysis of the parent radionuclides alone, neglecting contributions of daughters. This assumption is radiologically optimistic, since any contribution of the daughters will increase doses, and these contributions grow with increasing time.

If desired, one could progress to an assumption that equal retardation factors apply to parents and daughters. This assumption greatly reduces the difficulty of the analysis, and is presumed to be generally conservative [Codell *et al.*, 1982]; furthermore, data are not available to justify any other assumption. Given the assumption of equal sorption for all daughters, higher retardation factors will lead to higher doses for this depleted uranium waste, since higher retardation factors allow more time to pass before arrival at the well, which produces greater ingrowth of daughters.

Doses are calculated only for drinking well water. Adding other pathways that were included in the DEIS well scenarios can only increase calculated doses.

3.3 Calculated Doses for the Boundary Well

In this section we present results from the calculation of doses at a boundary well, assumed to be 30 meters downgradient from the edge of the disposal facility. The disposal facility is assumed to be well packed, such that its dimensions are 71 meters x 71 meters. The individual is assumed to consume 2 liters/day (0.73 m^3/yr) of water [NRC, 1977]. We have not included additional pathways, such as irrigation of a garden followed by ingestion of the crops. Including such pathways would tend to increase the doses reported here.

3.3.1 Disposal of Non-Reactive UF_4

In this section we describe the calculated doses assuming that the reaction rate of UF_4 is very slow relative to the travel time from the disposal facility. Consequently, we are evaluating the release, transport, and consumption of UF_4 and daughter products as fluorides.

The release rate of UF_4 is assumed to be limited by its solubility limit of 100 g/m^3, as discussed above. As discussed above, UF_4 can be metastably dissolved in water, but its subsequent reaction is very likely. We are assuming for this case that the reaction is very slow compared to the transport time. Applying Equation 13 and the isotopic mass fractions given in Section 1.1 leads to the release rates shown in Table 23.

Table 23 Solubility-limited release rates of UF_4 from the disposal facility

Isotope	Release rate prior to cover failure (Ci/yr)	Release rate after cover failure (Ci/yr)
U-234	2.0×10^{-3}	1.1×10^{-2}
U-235	8.6×10^{-5}	4.9×10^{-4}
U-238	5.4×10	3.1×10^{-2}

Given the low release rates after cover failure and the large overall inventory in the disposal unit, we can estimate that following failure of the cover, the releases would remain constant for about 1.2 million years until the inventory is exhausted. (This evaluation does not account for potential changes at the site over such a long time frame). Peak doses will be associated with this larger release rate; the cover failure time serves only to change the shape of the well concentration -vs.- time curve as it approaches the maximum concentration. We therefore take credit for zero release during the first 100 years, and only analyze the releases under failed conditions.

The mean travel time from the bottom center of the disposal facility to the well is given by the sum of the travel time in the unsaturated zone and the saturated zone. This is expressed as

$$T_{av} = \frac{x_u \theta R}{P} + \frac{x_s \phi R}{v}, \tag{16}$$

where x_u and x_s are the distances travelled in unsaturated and saturated zones, R is the retardation factor (assumed the same for both zones), P is the percolation rate, θ is the moisture content, ϕ is the porosity, and v is the Darcy velocity in the aquifer. Using the parameters specified above, the unretarded average travel time from the bottom of the waste to the well is 66 years. We have only evaluated the 71 x 71 meter disposal facility.

We begin with an analysis, using PAGAN, assuming the UF_4 to be unretarded (R = 1). Peak concentrations resulting from this analysis are greater than the solubility limit of UF_4 assumed in this report. The reason for this is the neglect of recharge in PAGAN; the release rates produce more mass than can be accommodated by the flow rate in the aquifer. We interpret these results to mean that there is negligible dilution in the aquifer, and evaluate the doses at the solubility limit of UF_4. Doses from drinking water at the solubility limit are shown in Table 24 for the initial isotopic concentrations.

Table 24 Doses calculated from PAGAN (concentrations at the solubility limit of UF_4 and initial isotopic concentration)

Isotope	Concentration (Ci/m^3)	Bone Surface Dose (mrem/yr)	Effective Dose Equivalent (mrem/yr)
U-234	1.25×10^{-5}	3.8×10^{4}	2.6×10^{3}
U-235	5.40×10^{-7}	1.5×10^{3}	105
U-238	3.35×10^{-5}	9.1×10^{4}	6.2×10^{3}
Total		1.3×10^{5}	8.9×10^{3}

Our second analysis uses the box model discussed above. The concentrations vary depending on the assumed dimensions of the disposal unit, which is assumed to be a square

of 71 m to 133 m on a side. As discussed above, only the smaller disposal unit is evaluated here. (Note that concentrations calculated from Equation 14 for the 133 m facility are higher than for the 71 m facility, so we are once again applying a nonconservative assumption). The volumetric flow rate leaving the box is therefore 1690 m^3/yr, which includes dilution between the disposal unit and the well. Combining this flow rate with the solubility-limited release rates using Equation 14 leads to the dose figures shown in Table 25.

Table 25 Doses from UF_4 calculated using the box model. Ingrowth of daughters is neglected.

Isotope	Bone Surface Dose (mrem/yr)	Effective Dose Equivalent (mrem/yr)
U-234	$2x10^4$	$1.4x10^3$
U-235	821	59
U-238	$5x10^4$	$3.6x10^3$
Total	$7x10^4$	$5.1x10^3$

The reader should bear in mind that these dose results assume (1) UF_4 does not react to produce high solubility conditions, (2) very large dilution in the aquifer, (3) no retardation, and (4) no contributions from daughter radionuclides. These results are therefore optimistic dose estimates. As an example, if a retardation factor of 100 were applied to the same analysis, the travel time to the well would be between 6,600 and 9,000 years, significant daughter ingrowth would apply, and the doses would increase.

3.3.2 Disposal of Reactive UF_4

In this section we describe the calculated doses assuming that the reaction rate of UF_4 is fast relative to the travel time from the disposal facility. This conditions appears to be the most likely. Evaluation of this case is complicated by the pH dependence of solubility of the uranium oxides formed by the reactions discussed above. We therefore consider the possibility of the waste being highly soluble in HF solution. In this case, the release rate is not solubility limited, but is only limited by the flow rate of water and the retardation factor associated with the surrounding soil. The reader is directed to Section 3.3.3 below for a discussion of the credibility of high solubilities at low pH. We will therefore analyze the release by a surface-wash model, as described previously by us in Kozak *et al.* [1990a]. The equation describing release from the disposal unit is

$$Q(t) = \frac{m}{T} e^{-Nt/T-\lambda} \sum_{n=1}^{N} \frac{(Nt/T)^{n-1}}{(n-1)!}. \qquad (17)$$

where m is the initial inventory of waste, λ is the radionuclide decay factor, N is the number

of mixing cells, $T = \theta DR/v$ is the contaminant space time in the disposal unit, D is the vertical dimension of the waste (8 meters), v is the percolation rate through the waste, θ is the moisture content, and $R = 1 + (1-\epsilon)\rho K_d/\theta$ is the retardation factor in the unit.

Prior to failure of the cover, the travel time of water through the waste disposal unit, T/R, is 51 years; this means that all of the waste is flushed out of the disposal unit while the cover is still intact. The travel time in the unsaturated zone under these conditions is 76 years; this means that the waste is entirely flushed out of the disposal unit and enters the aquifer during the first 127 years, assuming the cover remains intact during that time. For the sake of simplicity of the analysis, we allow the cover to last for 130 years in this analysis. We used N = 50 for all analyses reported in this report, which corresponds to little dispersion in the disposal unit.

The potential exists for the oxides to reach solubility limits and precipitate out upon leaving the disposal unit, since the disposal unit effluent will mix with surrounding waters. This leads to the possibility of increased pH outside of the disposal unit, with attendant lower solubility limits of oxides. However, we note that if the waste reacts prior to or during release, four moles of HF is released with every mole of uranium compound. Given the initial inventory assumed in this report of 1.08×10^{11} g (2.4×10^{8} lb) of uranium, we can expect the release of 1.8×10^{9} gram-moles (1.1×10^{8} lb) of HF. In this calculation we are assuming a fast reaction to completion (fast meaning on the order of days to a few months). This means that very large amounts of HF are being released at the same time as the uranium oxide, and the entire locality may be acidified, producing high solubility and mobility in the entire region between the disposal unit and the well. If we take a generous dilution factor from the box model of 1690 m^3/yr diluting the disposal facility effluent, we find that 1.7×10^{4} gram-moles/yr of HF is needed to produce pH = 1 in the water at the well (assuming no buffering capacity in the ground-water system). That is, even if the total amount of HF is released uniformly over 10,000 years rather than the 51 years calculated above, significant acidification of the aquifer can result. We therefore discount the potential for reprecipitation of the waste in the aquifer.

Doses resulting from this calculation are extremely large, and result from the reactions in the waste producing conditions associated with high mobility and solubility. It is important to note that a person could not actually receive these doses because the water would be unpotable. That is, the performance assessment analysis shows the potential for such severe ground-water contamination that one could not inadvertently drink significant amounts of the water without adverse health effects. If the ground-water system has enough buffering capacity to neutralize the released acid, the actinides would tend to become less soluble, and lower doses would result. An evaluation of the influence of pH on solubility is given in Section 3.3.3, and an evaluation of a lower solubility form of uranium is given in section 3.3.3.

3.3.3 Disposal of U_3O_8

In this section we consider the impacts related to disposal of the waste as U_3O_8. One important point to make is that U_3O_8 does not exist in solution, but rather speciates to other oxide, hydroxide, and complex forms, all of which are soluble to some extent. In addition,

U_3O_8 is thermodynamically unstable in ground water. U_3O_8 is therefore expected to convert to other oxide forms; the favored form under oxidizing conditions is schoepite, but other complexes may be favored depending on site-specific conditions. As an example, Chu and Bernard [1991] showed that uranium complexes with silicates are important to the solubility of uranium at the Nevada Test Site. Uraninite is the favored form under reducing conditions, but we expect oxidizing conditions to dominate in a disposal unit in the unsaturated zone. We therefore consider the behavior of schoepite under disposal conditions.

The solubility limits of radionuclides in ground water are affected by the ability of the compound to form complexes with other species in and near the disposal unit. Solubilities are a function of the chemical properties of the element and the chemical composition and temperature of the water [Chu and Bernard, 1991]. Site-specific conditions can produce a wide range of solubility behavior for uranium oxides, and the potential exists for U_3O_8 to react to form other oxides, hydroxides, or complexes with soil minerals under some conditions. Therefore, on a generic basis, we cannot specify a solubility limit for U_3O_8 with much confidence. Furthermore, the details of the ground-water chemistry needed to perform the detailed analyses used to estimate solubilities are not available in the site description of the southeast reference site [NRC, 1981].

We therefore adopt a design basis for disposal conditions. We neglect the presence of other mineral species that may influence the solubility of the uranium, and only consider the solubility of uranium in water that is in equilibrium with air. A solubility diagram is shown in Figure 4 for water in equilibrium with air (0.21 atm partial pressure oxygen); the figure shows the activity (concentration in moles/liter) of the primary dissolved complexes of schoepite vs. pH. A comparable solubility diagram is shown in Figure 5, which includes equilibrium with a typical CO_2 concentration in water (produced by dissolving airborne CO_2). In both cases the minimum solubility limit is of order 10^{-6} gram-moles/liter (2.4×10^{-4} g/liter), and this minimum occurs in a narrow pH range. Over $4 < pH < 9$, a liberal range for ground-water pH at the Southeast reference site, we can have confidence that the solubility limit is less than 10^{-5} moles/liter (2.4×10^{-3} g/liter).

These solubility diagrams lend credibility to the assumptions made in Section 3.3.2 about potential high solubility of the waste if the reaction to produce HF is rapid. At low pH, the solubility of schoepite becomes very large, and rapid conversion of UF_4 to HF would clearly produce enough HF to lower the pH into the high solubility range. Projections of possible values of pH were discussed in Section 3.3.2.
Consumption of well water at a dissolved concentration of 1.25×10^{-4} Ci/m^3 (2.6×10^{-5} g/liter) of the waste at its initial isotopic ratio produces an annual dose of 25 mrem to the bone surface. Any acceptable analysis of off-site concentrations for initial conditions must therefore produce less than these concentrations. As discussed above, analyses using PAGAN suggest negligible dilution of the releases in the aquifer, which in turn suggests that the solubility limit in the source that would initially produce 25 mrem/yr would be [illegible] $\times 10^{-5}$ g/liter. Using large amounts of dilution from the box model discussed above suggests that solubility limits less than 5×10^{-5} g/liter would be initially acceptable. We therefore have an approximate range of acceptable solubility limits at the time of disposal of 2.6×10^{-5} to 5×10^{-5} g/liter. These solubility limits are lower than the lowest solubility limit for schoepite in

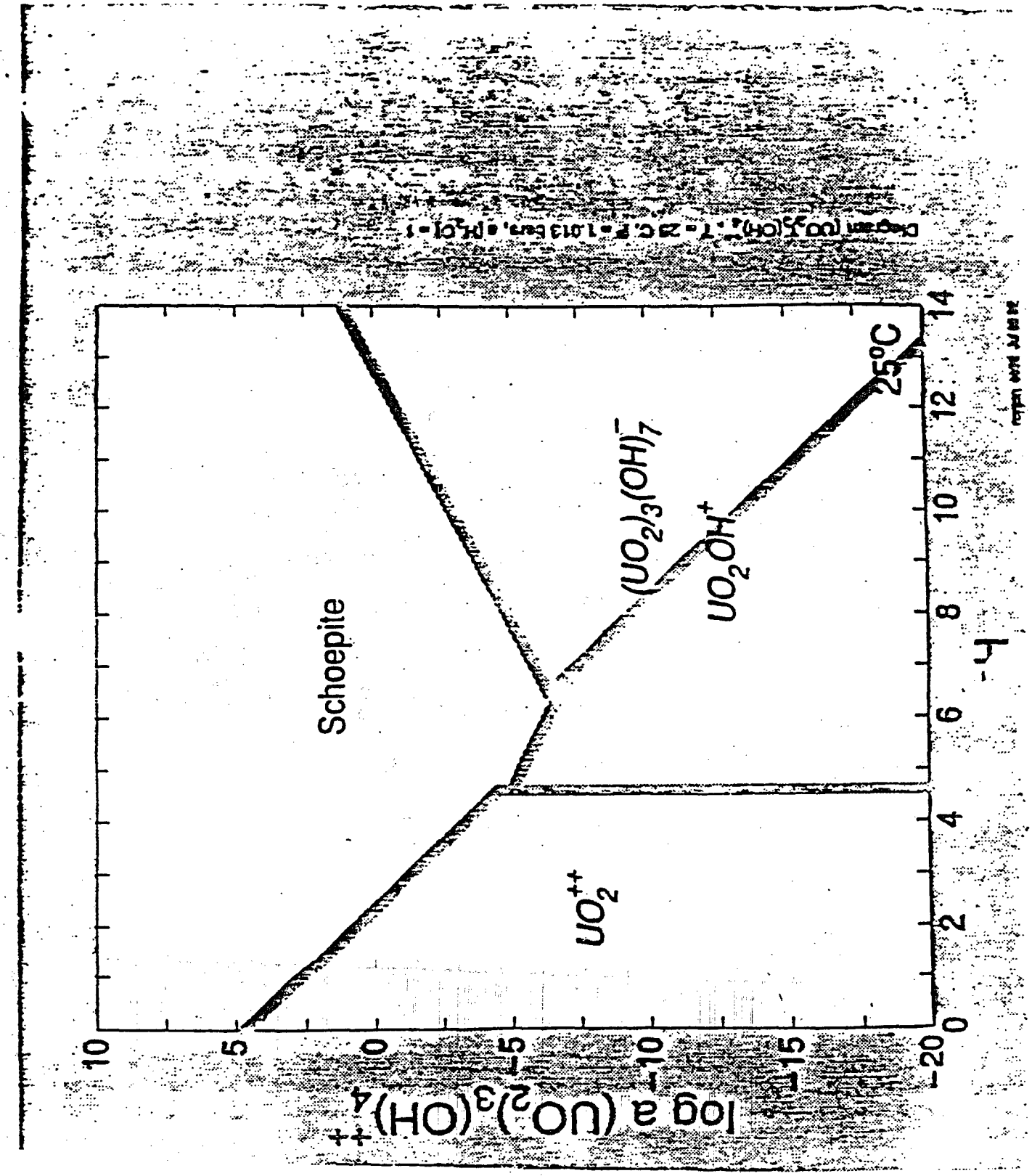

Figure 4: Solubility limit of schoepite in CO_2-free water in equilibrium with air.

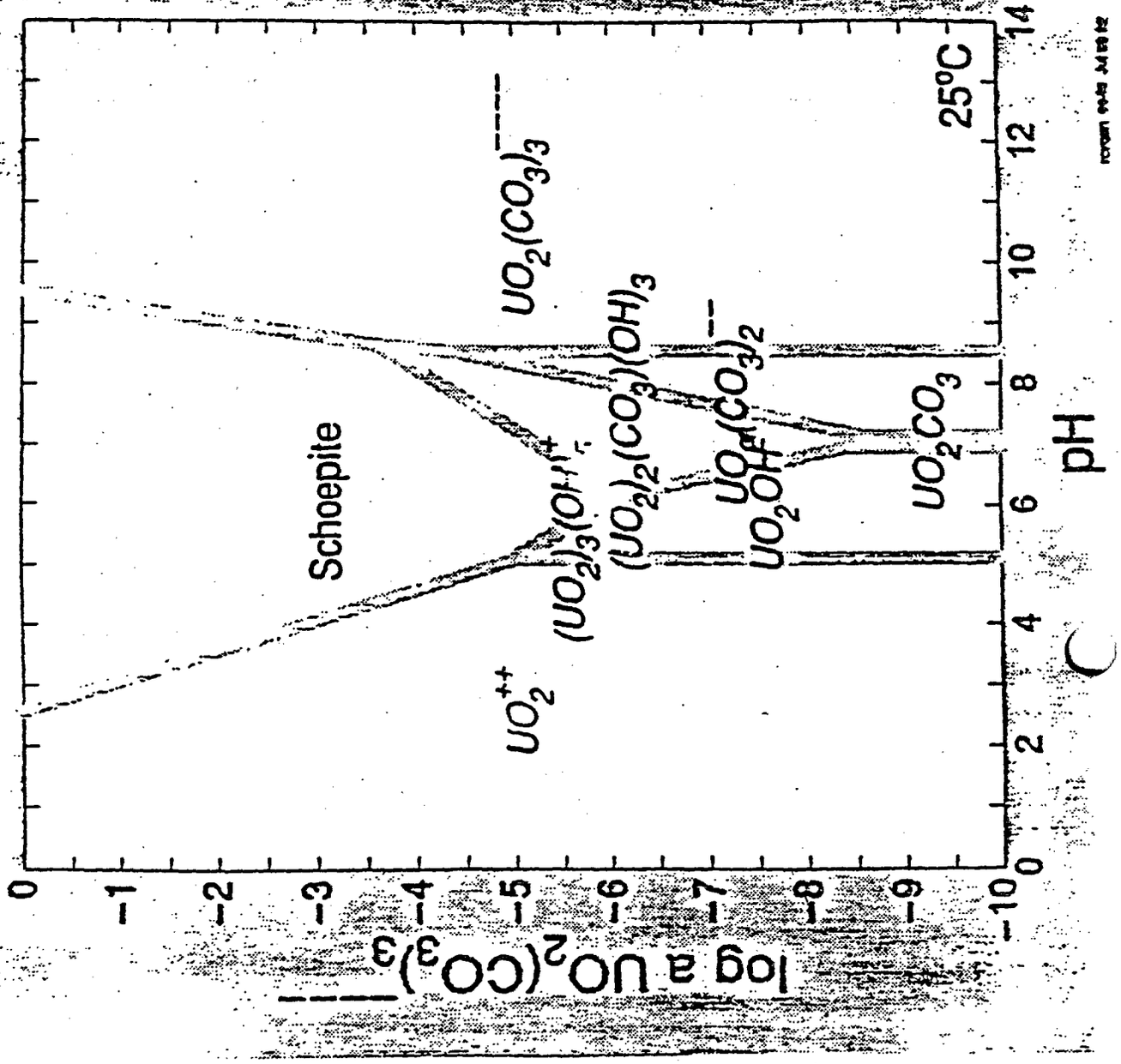

Figure 5: Solubility limits of schoepite in equilibrium with CO_2-containing water.

water, and significantly lower than value associated with a range of pH values. This means that given the assumptions in the source-term calculation (releases at the solubility limit) and given the assumptions in the transport calculation (which are representative of the Southeast reference site), it is not possible for uranium oxides to produce doses less than 25 mrem/yr.

This conclusion is made with several extremely important qualifications. First, the solubility of uranium compounds can be much less than the schoepite in water values, since uranium can form very insoluble complexes with minerals. The potential for these lower solubilities can only be evaluated for specific geochemical conditions. Second, other sites may produce greater dilution than the southeast site, which would tend to reduce well concentrations. Third, alternative waste forms may be proposed that would reduce the release rates of the waste or its solubility limit, and this may significantly decrease off-site doses. For instance, if the schoepite were vitrified, the release rate into water would be reduced, and the large amounts of silica used in the vitrification may well decrease solubility limits by orders of magnitude.

It should be understood that these analyse have neglected the contributions of daughter radionuclides. The peak doses actually gradually increase in time owing to ingrowth of daughters. Daughter contributions can be calculated easily if equal retardation factors apply to all parents and daughters. Daughter concentrations can be calculated from the parent concentration, and appropriate dose conversion factors can be applied. Including daughter contributions to bone surface dose from a 10^{-5} g/liter drinking water concentration, which initially produces 10 mrem/yr from uranium alone, produces 25 mrem/yr at 10,000 years. At 2 million years (equilibrium) the bone surface dose rises to about 320 mrem/yr. It should be noted that given these low solubility limits and a perpetuation of current infiltration rates, only a tiny fraction of the initial inventory leaches out into the ground water over 2 million years. Consequently, these larger ground-water doses can potentially be reached at long times.

3.3.4 Reaction-Path Modeling

Simple analyses of the solubility of U_3O_8 in water that is in equilibrium with air (discussed in Section 3.3.3) indicate a solubility limit for uranium on the order of 10^{-6} gram-mole/liter. The water considered in Section 3.3.3 contained dissolved $O_2(g)$ and dissolved $CO_2(g)$, but the presence of buffering minerals was not taken into account. The solid uranium form under these conditions was schoepite. The question remains however of the behavior of dissolved uranium as it moves from the disposal cavity into the flow path given the chemical condition of the ground water at the site.

In this section, we report geochemical analyses of the solubility of uranium given a ground water composition for a specific site. A description of the geochemical conditions used in these analyses is given in Appendix A. These data have been adopted from the draft problem description used by the NRC in analyses related to the Branch Technical Position on low-level waste performance assessment during 1992. Data are from an actual site in the southeastern United States. However, the site does not necessarily represent the same site analyzed for the DEIS for 10 CFR Part 61 [NRC, 1981].

The approach taken here to obtain a solubility limit for uranium in the geological system described in Appendix A is the following. First, calculations are performed to obtain an analytical system that matches the mineralogy and pH range given by the empirical data. The reader should note that a number of scenarios can be constructed that could produce the empirical conditions reported in Appendix A. The key is to construct a scenario (a set of reactions involving the key components of the system) based on known geochemical processes that results in a final state similar to the empirical conditions specified. Second, uranium is introduced into the analytical system in concentrations high enough to allow precipitation to a solid phase. At equilibrium, the solubility of uranium for the analytical system is obtained. Third, factors that are known to affect uranium solubility are varied to determine the effect that they have on uranium solubility in the analytical system. The *React* code [Bethke, 1992] was used for this analysis.

The mineralogical composition given in Appendix A consists primarily of Quartz and Kaolinite. A small percentage of other minerals like Illite are also present. The pH range specified in Table A.1 is 4.5 to 7.3. Performing a computer experiment where Kaolinite and Quartz are mixed in water containing the cations Ca^{2+}, Na^{+}, K^{+} (with concentrations like that given by the empirical data), dissolved $CO_2(g)$ (log f = -3.5) and HPO_4^{-} produces a groundwater with a pH of 8.68. The pH obtained is higher (more basic) than the measured pH for the groundwater. The silica concentration obtained is 10^{-4} gram-moles/kg H_2O. The reported silica concentration in Table A.1 is 6 ppm or 10^{-4} gram-moles/kg H_2O.

While the resulting silica concentration from the computer experiment described above matches the empirical value, the pH obtained is out of the range of the reported pH values. Lower pH values can be caused by the presence of other minerals, higher concentrations of dissolved carbon dioxide and/or higher concentrations of dissolved oxygen. The reader should note that dissolved oxygen was not included in the computer experiment described above.

To drive the pH to lower values, the mineral Illite was added to the system. With Illite present, the pH obtained (pH = 7.84) was still higher than that given in Table A.1.

To change the concentration of dissolved carbon dioxide in the system, the fugacity of $CO_2(g)$ in equilibrium with the water was varied from $10^{-3.5}$ to 1. The lowest pH obtained (for log f_{CO2} = 0) was 5.63. The dissolved CO_2 content is not given in the empirical data. A range of f = $10^{-3.5}$ to f = 10^{-2} is considered reasonable by the authors for this system.

Dissolved oxygen also has an affect on the pH. To check the effect of dissolved oxygen on the system, oxygen was added with fugacity values varying between 10^{-100} (almost no oxygen) to $10^{-0.7}$ (the oxygen content of air). The $CO_2(g)$ fugacity was set to $10^{-3.5}$ value. The resulting pH range was 6.65 to 7.93. With such a large variation in the $O_2(g)$ fugacity, it appears that dissolved oxygen has a relatively small effect on the pH.

It is not clear what mechanism is driving the pH to the lowest values (pH = 4.5) reported in Table A.1. A system with Kaolinite, Quartz, Illite, dissolved carbon dioxide (f = $10^{-2.35}$) and miscellaneous cations and anions as reported in Table A.1 equilibrates at a pH value of 7.55. Next, the solubility of uranium in an equilibrated system with the characteristics

described above is examined. Once the solubility in this system is established, we will force the pH to lower values by adding HCl to determine the behavior of the uranium solubility at lower pH.

Figure 6 shows the state of the analytical system when uranium is added. Figure 1a shows the elemental fluid composition. The concentration of uranium in the fluid is $10^{-5.5}$ gram-moles/kg H_2O (10^{-5} gram-moles/liter) when the $CO_2(g)$ fugacity is $10^{-2.35}$. The uranium concentration is 10^{-6} gram-moles/liter when the $CO_2(g)$ fugacity is $10^{-3.5}$ and remains at 10^{-6} gram-moles/liter when the $CO_2(g)$ fugacity is lowered to 10^{-6}. Based on this calculation, it appears that the uranium solubility is unchanged due to the presence of Quartz and Kaolinite and has a lower limit of 10^{-6} gram-moles/liter as $CO_2(g)$ is removed from the system. Figure 6b shows the major minerals that are present. Quartz is most abundant followed by Kaolinite and Muscovite (an alteration mineral with Illite). The solid uranium phase is Uranophane (a uranium silicate mineral). Figure 6c shows the primary soluble uranium species. For this pH (pH = 7.55), uranium carbonate species account for most of the uranium solubility.

Figure 7 shows the uranium solubility as HCl is added to the high $CO_2(g)$ ($f = 10^{-2.35}$) system (lowering the pH). The pH range shown in Figure 2 corresponds to the range given in Table A.1. The maximum uranium solubility is $10^{-5.2}$ gram-moles/liter at a pH of 4.5. The lowest uranium solubility is at a pH of 5.3 where the solubility is about $10^{-5.9}$. At the high pH value (pH = 7.5), the solubility of uranium is about $10^{-5.5}$. Figure 8 shows the soluble uranium species as a function of pH. At higher pH, the carbonate speci $UO_2(CO_3)_2^{-2}$ dominates the solubility. At lower pH, uranium phosphate species dominate solubility.

The minerals present as a function of pH are shown in Figure 9. Quartz and Kaolinite are stable throughout the pH range. Muscovite alters to Illite around a pH of 5.25. Uranophane is the solid uranium phase present from pH of 4.5 to pH of 7.5. When the dissolved carbon dioxide in the system is decreased ($f_{CO2} = 10^{-3.5}$), the uranium solubility changes slightly as shown in Figure 10. The maximum solubility in this pH range is still $10^{-5.2}$. However, the solubility does not increase with increasing pH as shown in Figure 2. Justification for this behavior is seen in the decreased formation of uranium carbonate species as shown in Figure 11.

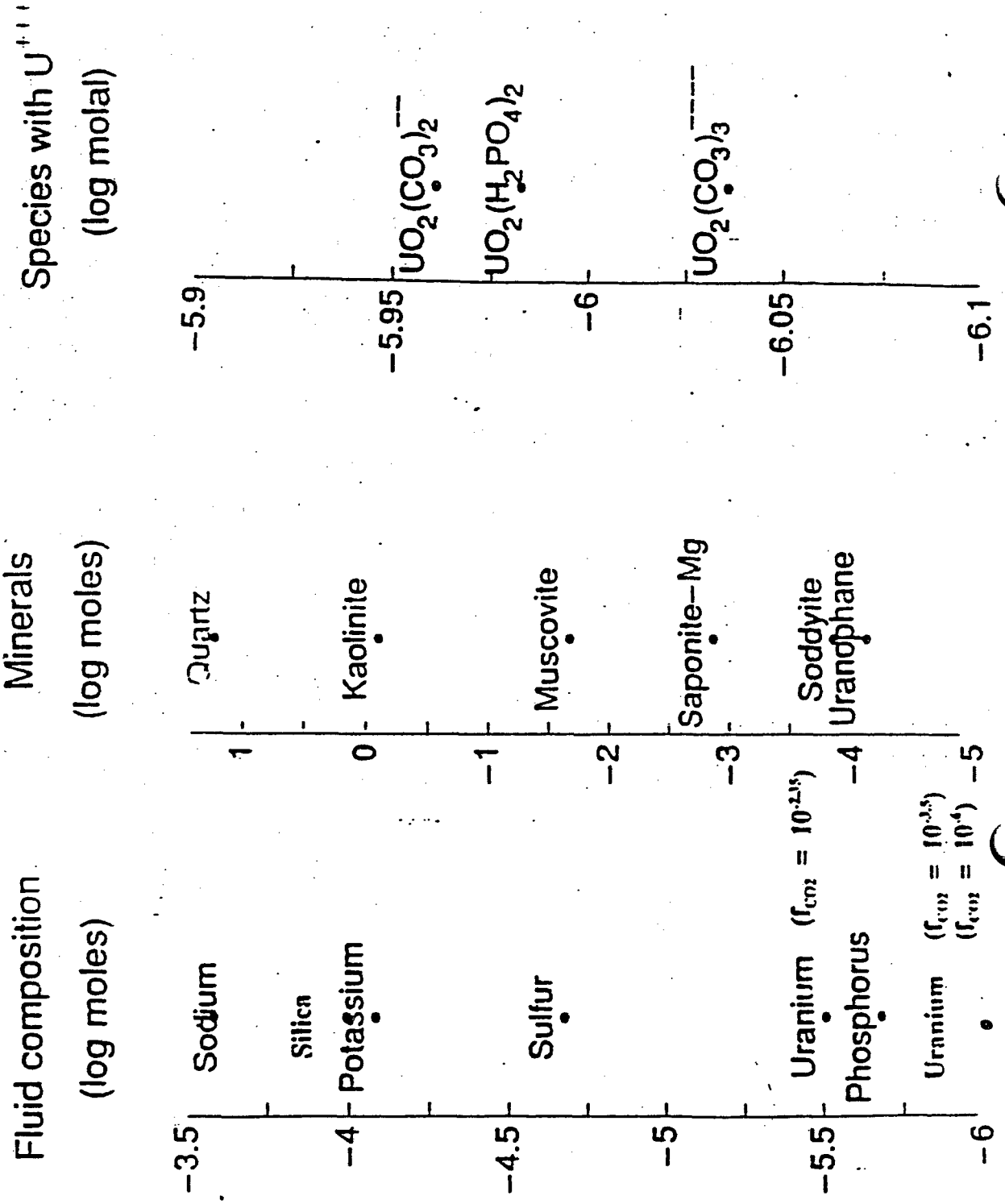

Figure 6 Uranium species and minerals present in a groundwater representative of the Southeastern United States.

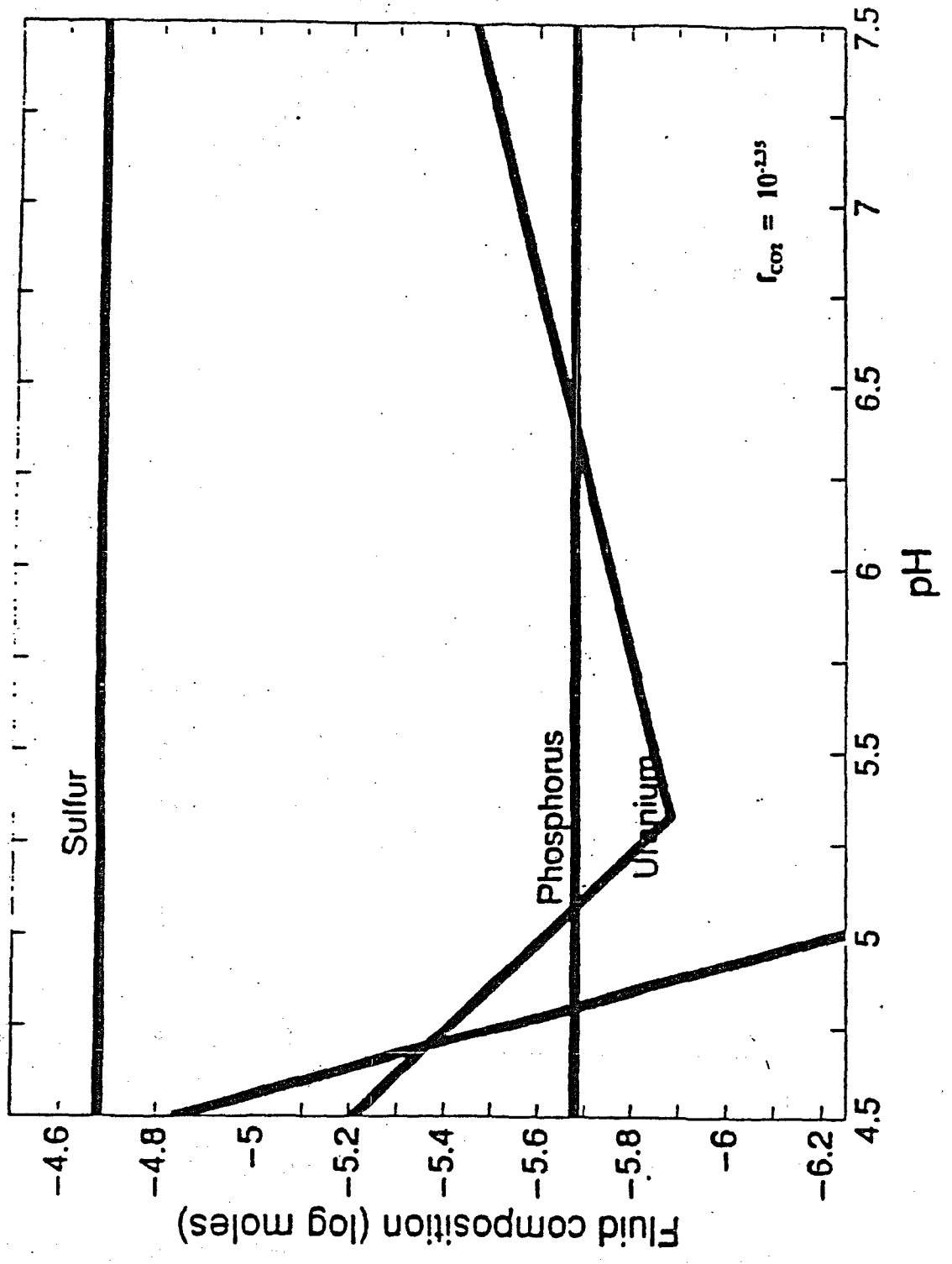

Figure 7 Uranium solubility for a high carbon dioxide system as a function of pH.

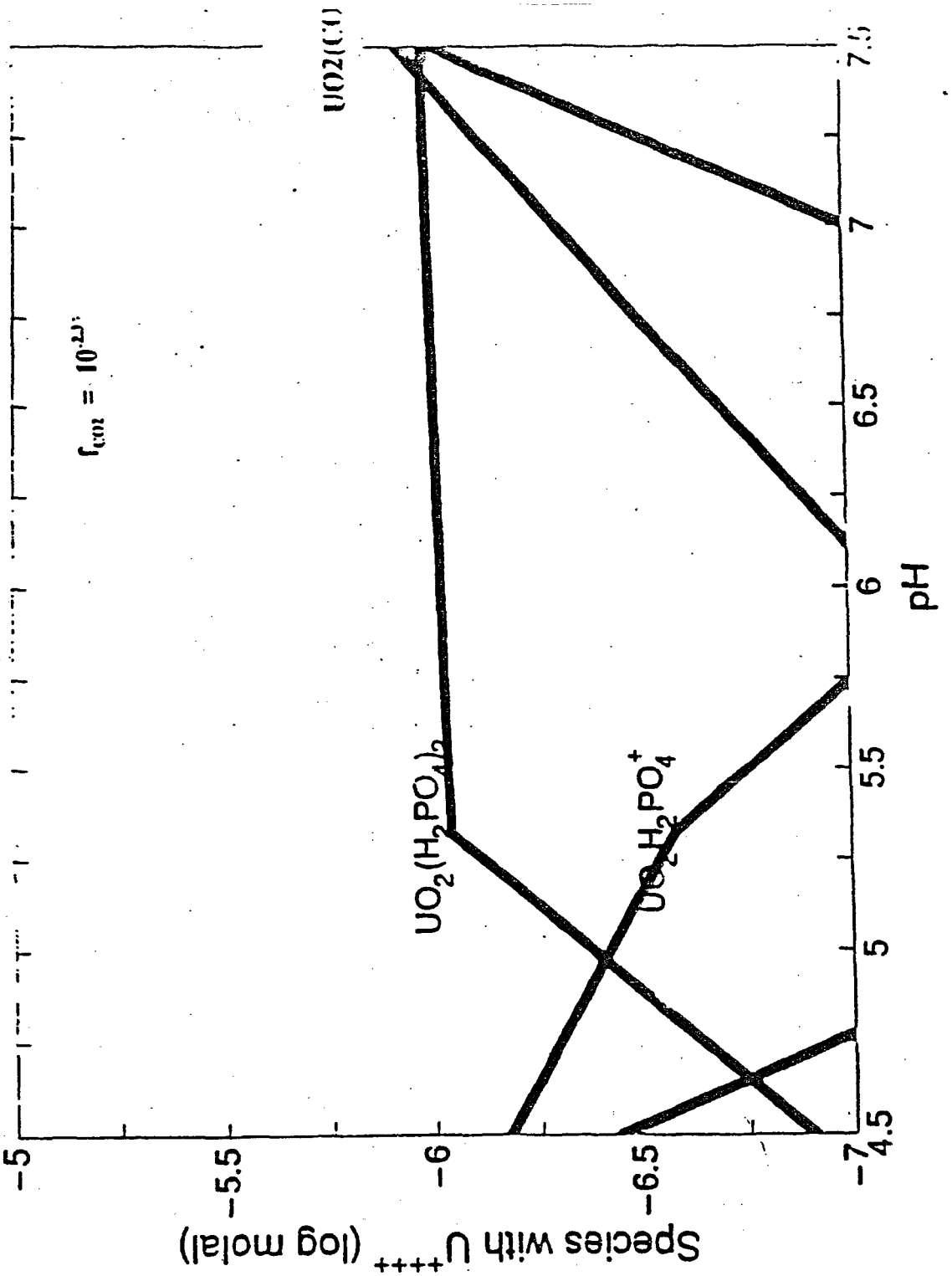

Figure 8 Uranium species present in a high carbon dioxide system as a function of pH.

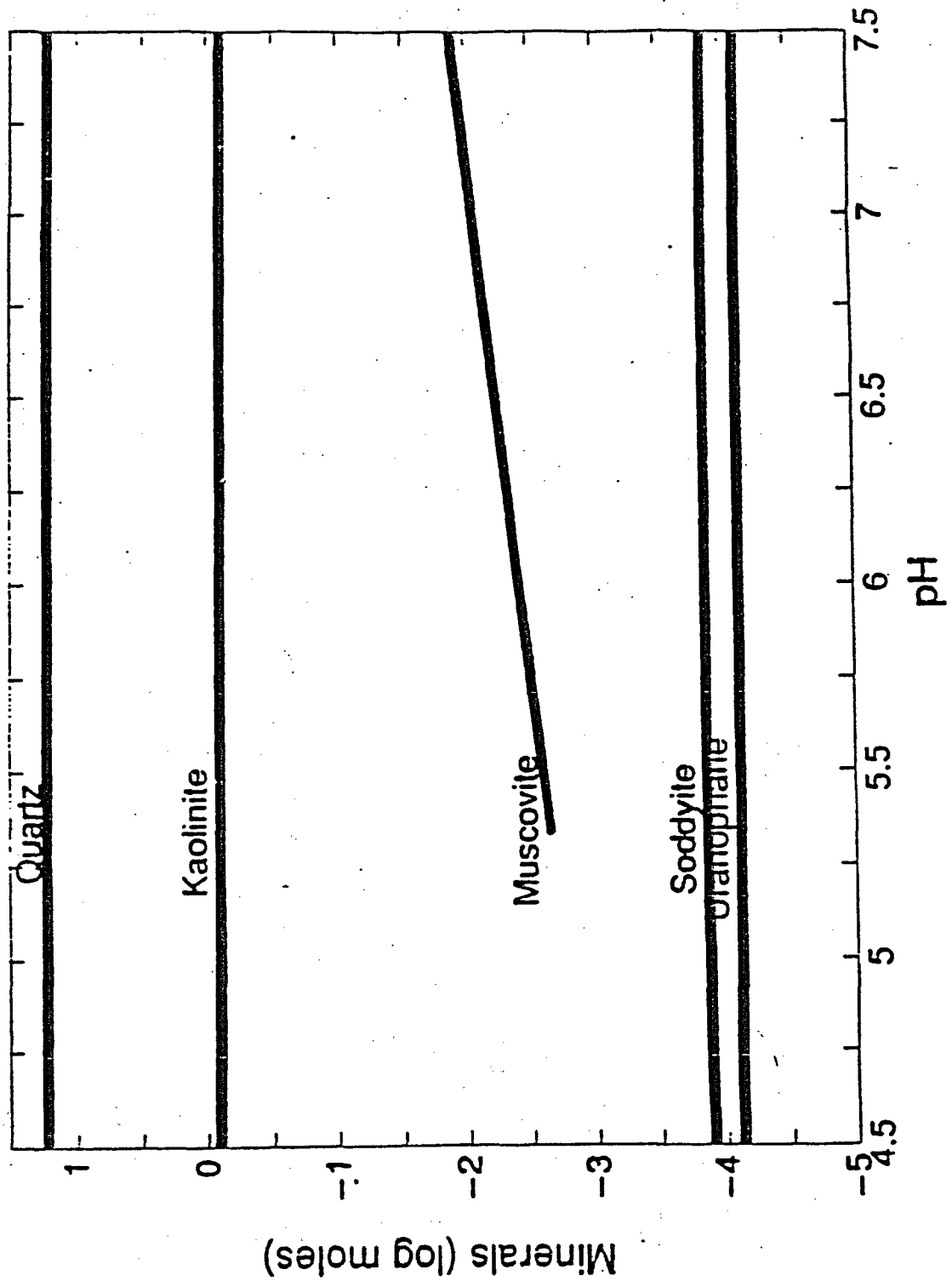

Figure 9 Minerals present in a Southeastern United States groundwater as a function of pH.

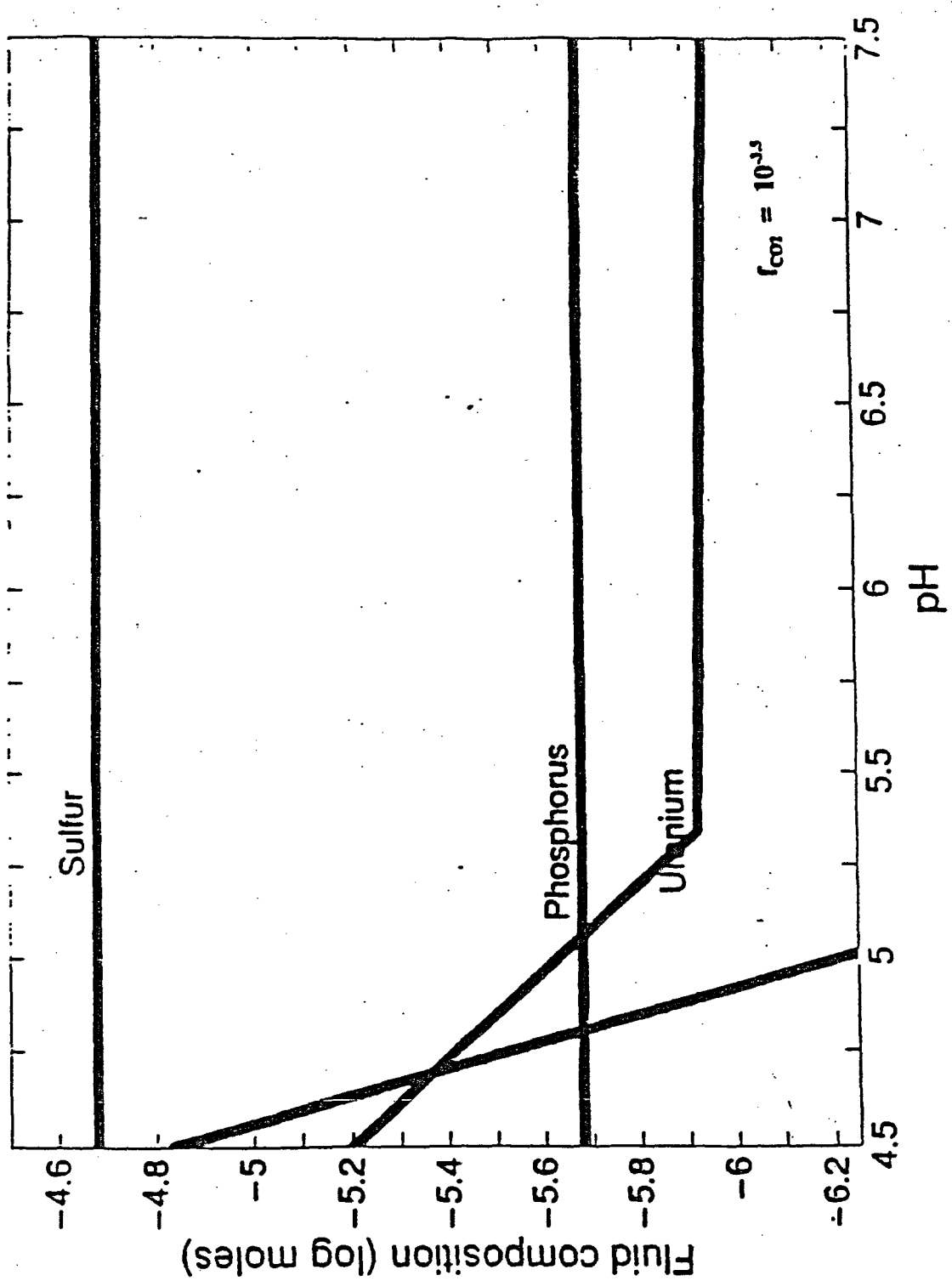

Figure 10 Uranium solubility for a low carbon dioxide system as a function of pH.

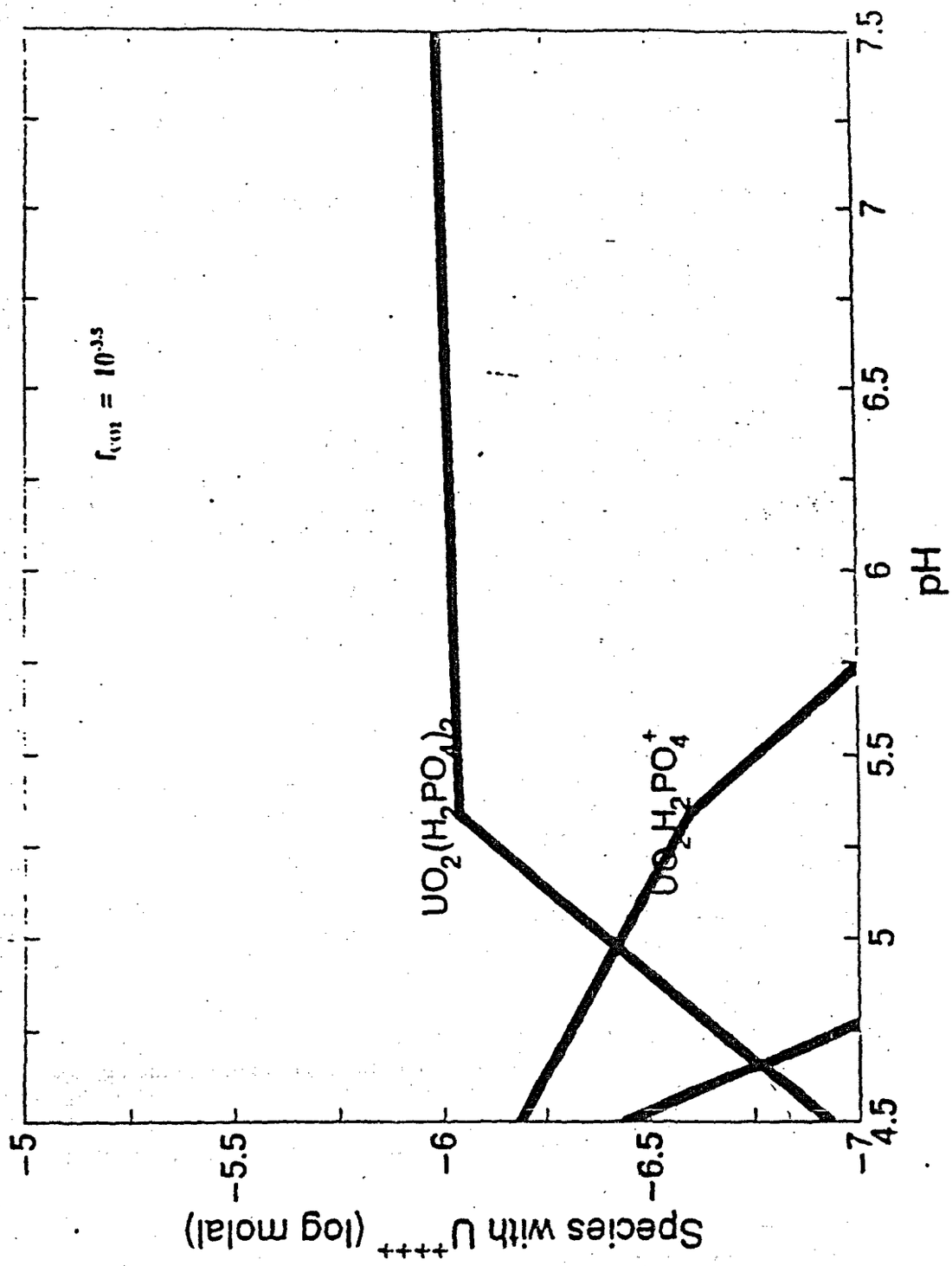

Figure 11 Uranium species present in a low carbon dioxide system as a function of pH.

Based on the information given above, it appears that the solubility of uranium moving from the disposal cavity into the first transport leg varies only slightly. Including interactions with the soil specified in Appendix A does not reduce the solubility to a level that would result in doses less than 25 mrem/yr. As in the previous section, we make this conclusion about the uranium alone, without including daughter radionuclides. Including the daughters can only increase offsite impacts.

The question arises then about what will make the uranium less soluble. In general, uranium ore deposits (low solubility U^{4+}) are found under strongly reducing conditions when there is either insufficient oxygen to maintain a high oxidation potential or a strongly reducing element like organic carbon that causes uranium to reduce from U^{6+} to U^{4+}. The fact that burial is proposed in the vadose zone nearly eliminates strongly reducing conditions as a possibility. The reader may note that all of the soluble uranium species shown in Figures 1 through 6 involve U^{6+}. An Eh-pH diagram is shown in Figure 7. At Eh = 500 mV (the site value given in Table A.1), the uranium is in the U^{+6} regime for all pH values of interest; hence the relatively large solubilities. As a point of general interest, in Class A low-level waste streams containing more typical inventories than those examined here, uranium compounds are present in the waste in small quantities. Much of the remainder of Class A waste is organic material that produced reducing conditions in the waste as it biodegrades. Consequently, during the period (perhaps the first few hundred years) in which organic materials are actively biodegrading, conditions in a low-level waste vault can be expected to be consistent with low solubilities, as discussed above. It is not clear what conditions will occur following the time period of active biodegradation. However, the resolution of this issue is expected to be site specific, and specific to each disposal vault design.

4.0 Off-site Exposures from Releases of Radon-222

The high inhalation doses from radon exposure calculated in the intruder-agriculture scenario suggest that radon might be released in large enough amounts to produce a radiologically significant air-transport pathway for off-site exposures. These exposures will be analyzed in this section.

As in the intruder-agriculture scenario, we model the releases from the intact tumulus in two parts: below-ground transport to the surface, followed by airborne transport, which includes disequilibria of radon daughter products. The below-ground transport can be treated in the same fashion as in the intruder-agriculture scenario: it is assumed that transport occurs by diffusion through the cover. Again, we adopt this approach with the caution that it is more likely that transport will be strongly influenced by barometric pumping, causing convective transport to the surface [Nazaroff, 1992]. Adopting diffusion as the only transport mechanism of importance may tend to underestimate releases somewhat. However, it is not clear in the literature how strong an influence barometric pumping has on long-term average exposures.

Above-ground transport can be treated in performance assessment by the Gaussian-plume modeling approach suggested by Chu *et al.* [1990], which we briefly summarize here. The diffusive release at the ground surface is assumed to be constant in time over the time

frames of the exposure analyses. The release only varies as the Ra-226 concentration in the waste increases. In the absence of terrain information, we assume that both release and receptor are at ground level. Airborne concentrations at the facility boundary are calculated by assuming a constant wind speed, direction, and atmospheric stability class. This approach is obviously conservative, since at any actual site these conditions will be variable, and that variability will tend to reduce either concentrations or the duration of exposure. Accounting for variability in wind direction is likely to reduce doses by less than an order of magnitude. We shall analyze different wind stability classes to evaluate that uncertainty. Following NRC recommendations [NRC, 1977b], we shall use a wind speed of 1 m/s. A person is assumed to be at the site boundary breathing the plume for half of the year. The release is assumed to occur over the entire tumulus; it is assumed that there is not a preferential subsurface path leading to a point release into the atmosphere. This assumption is not conservative; assuming a point release can produce much larger calculated doses than does assuming an area release.

The model for airborne concentrations of radon is the Gaussian plume model for these assumptions

$$\chi/Q = \frac{e^{-\lambda x/u}}{\pi u \sigma_y \sigma_z}, \tag{18}$$

where χ is the air concentration of radon (Ci/m^3), Q is the release rate from the soil (Ci/yr), u is the wind speed (m/yr), and σ_y and σ_z are the lateral and vertical dispersion coefficients, respectively. This equation represents a point release in space. To approximate a spatially distributed source, the virtual point method is used [Turner, 1970; Chu *et al.*, 1990]. In the virtual point method, the point source is moved upwind far enough that twice the lateral dispersion coefficient equals the width of the area source, as shown in Figure 12.

The dispersion coefficients are calculated from the Pasquill-Gifford equations:

$$\sigma_y(x) = x[a_1 \ln(x) + a_2], \tag{19}$$

and

$$\sigma_z(x) = \frac{1}{2.15}\exp[b_1 + b_2 \ln(x) + b_3 \ln^2(x)], \tag{20}$$

where the constants have been determined empirically from field observations [Vogt, 1977]. For Class A and Class F stability classes, the values for the constants are given in Table 26.

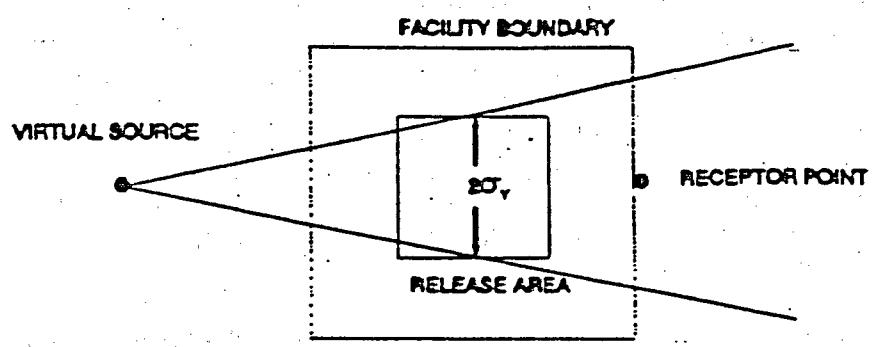

Figure 12: The virtual point method for evaluating area sources.

Table 26 Pasquill-Gifford constants for dispersion coefficients [Vogt, 1977].

Constant	Class A Value	Class F Value
a_1	-0.0234	-0.0029
a_2	0.3500	0.0540
b_1	0.8800	-3.8000
b_2	-0.1520	1.4190
b_3	0.1475	-0.0550

Ap; ng these constants to Equation 19 and solving iteratively for the virtual point distance, the ding in the half width of the tumulus and the distance to the receptor, produces the dis.. between the virtual source and the receptor: 1115.5 meters for Class F and 218.5 meter: .or Class A. Applying these distances to the dispersion coefficient equations, the values for χ/Q are 5.8×10^{-4} s/m^3 (1.84×10^{-11} yr/m^3) for Class F, and 1.8×10^{-4} s/m^3 (5.77×10^{-12} yr/m^3) for Class A. These values represent the amount of dilution (by atmospheric dispersion) of the radon source release rate given very broad differences in atmospheric stability. If we also evaluate the more conservative case, in which all of the released radon emanates from a single point, we find that χ/Q for Class F stability is 0.077 s/m^3 (2.4×10^{-9}

yr/m^3). This χ/Q represents the physical situation in which the radon is released from a fracture in the clay cover or concrete vault. Physically, this mechanism is believed to be dominant in radon emissions from the subsurface [Nazaroff, 1992]. Thus, the range of χ/Q used in this report is 1.8×10^{-4} to 7.7×10^{-2} s/m^3.

The dose that results from this release and transport to an off-site person is given by

$$Dose = DCF_{equilib} F \frac{\chi}{Q} I A [Ra] \epsilon (\lambda D/p)^{1/2}, \tag{21}$$

where $DCF_{equilib}$ is the dose conversion for an equilibrium mixture of radon daughters (1.04×10^8 mrem/Ci for lung doses), I is the inhalation rate for the assumed half year (4000 m^3/yr), A is the area of the release (71 m x 71 m), F is the equilibrium factor, and the remainder of the terms are, as in the intruder-agriculture analysis, related to the diffusional release. Outdoor equilibria of radon daughters tend to be higher than indoor equilibria, since there are fewer surfaces onto which the daughters can plate out. Values for F outdoors typically range 0.4 to 0.9, with some values reported outside of this range [NCRP, 1988].

We shall assume that the release flux (Ci/m^2 yr) is the same as in the intruder-agriculture scenario. The reader will recall that this flux was based on diffusion through a concrete slab into a house, which may be expected to have lower diffusion coefficients than natural soil, and that diffusion mechanisms generally underpredict radon fluxes. Therefore, these estimates of the release may not be conservative. The results of this dose calculation are shown in Table 27. The differences between the low estimates and the high estimates represent the range of values for χ/Q (which includes uncertainties in release area and stability class) and the range of daughter disequilibrium F. The optimistic doses are for continuous Class A wind stability and F = 0.4; the pessimistic values are for continuous Class F wind stability and F = 0.9.

Table 27 Off-site doses from inhalation of Rn-222 daughters.

Time	Ra-226 Concentration (Ci/m^3)	Optimistic Lung Dose (mrem/yr)	Pessimistic Lung Dose (mrem/yr)
1000	1.90×10^{-6}	0.05	45.7
5000	1.64×10^{-4}	4.0	3.95×10^3
10,000	9.12×10^{-4}	22	2.19×10^4
50,000	2.78×10^{-2}	676	6.69×10^5
equilibrium	1.14	2.8×10^4	2.74×10^7

Based on the assumptions used in this analysis, it appears that transport of Rn-222 can produce significant off-site doses. At a specific site, data would be available to modify some of the assumptions used in this analysis, such as the frequency and duration of prevailing wind direction changes. Site-specific analyses may show either better or worse dose calculations than these, since some of the models and parameters used here are probably conservative, and some are probably not conservative.

5.0 Chemical Toxicity Considerations

In this section we consider potential health effects resulting from the chemical toxicity of UF_4 and its possible reaction products.

The most important uranium toxic effect of uranium is damage to the kidney; permanent renal damage can be expected to occur from a 40 mg intake of uranium by a 70 kg person [McGuire, 1991]. This translates to an intake of 1.3×10^{-8} Ci of U-238. By contrast, ingestion of this amount of U-238 would produce a 3.4 mrem effective dose equivalent and 48.6 mrem bone surface dose. Since these doses are much smaller than can be expected to produce observable health effects, it appears that the chemical toxicity of U-238 is more significant than the radiological toxicity. McGuire also states that an intake of 230 mg may produce 50 percent lethality in a 70 kg person, which corresponds to 7.7×10^{-8} Ci of U-238. Ingestion of this amount of U-238 in soluble form would produce 210 mrem bone surface or 19.6 mrem effective dose equivalent. We note that these dose levels would be considered acceptable radiological intruder doses, but would produce 50 percent lethality from renal failure resulting from chemical toxicity.

As discussed above, the inventory associated with 1.2×10^6 ft^3 of UF_6 waste may potentially produce 1.8×10^9 gram-moles of HF that can enter the ground water. This is an enormous potential release, and may have a number of important consequences. The magnitude of these consequences will depend on the rate at which the HF is produced: that is, the reaction rate of UF_4 under disposal conditions. If the reaction is relatively fast, as assumed in Section 3.3.2, very high ground-water concentrations may result. This can potentially lead to toxic exposures, dissolution of the vault or surrounding soils, and enhanced releases of uranium compounds at low pH conditions.

We were unable to find toxicity data for ingestion of HF solutions in the time available to generate this report. Most available data relates to HF and HF solution toxicity via the inhalation route [Sax and Lewis, 1989]. HF has a high vapor pressure (0.53 atm at 20°C), and would tend to partition significantly into the gas phase. HF concentrations in air are "immediately dangerous to life or health" above 30 ppm (25.4 mg/m^3); this is the maximum allowable concentration of HF for 30 minute exposure [McGuire, 1991]. If we assume thermodynamic equilibrium between the ground-water phase and the breathing air above it, this means that any ground-water concentration above 6×10^{-5} mole fraction (67 ppm) leads to an acutely dangerous air concentration. Longer exposure durations have correspondingly lower acceptable air concentrations. According to the "dangerous toxic load" approach discussed by McGuire [1991], 8.9 ppm in air comprises safe 500 hour exposure concentration, and 2.1 ppm air concentrations can be tolerated for a year. This annual value corresponds closely to the NIOSH permissible time-weighted average of 2.5

mg/m^3 in air [Sax and Lewis, 1989]. Again assuming equilibrium between ground water and breathing air, this corresponds to 4 ppm HF in ground water.

Two types of inhalation exposures might be postulated related to ground-water contamination of HF. The first is transport to the surface through the soil, leading to inhalation exposures to a person standing on the surface. Limitations to transport of HF through the ground to the surface, and dilution by moving air above ground will tend to increase the allowable ground-water concentrations for this exposure path. The second path would be inhalation exposures from well water usage for drinking, showering, and other domestic purposes. Analysis of these pathways would require a large number assumptions about the exposures that we have not attempted to address here. Nevertheless, given the large amounts of HF that may potentially be produced and the low permissible annual concentrations, it is probable that unacceptable amounts of HF will be introduced into the ground water.

6.0 Summary

We have conducted a number of analyses to evaluate potential doses that could result from disposal of pure depleted uranium as Class A low-level waste. Two intruder analyses were performed using assumptions and calculations consistent with the Environmental Impact Statement for 10 CFR Part 61. Consideration was given to the possibility of disposing the waste as uranium oxide as well as UF_4, and intruder doses were calculated for each. We have also analyzed potential off-site impacts from the disposal. Several conceptual models and conditions were considered for flow, solubility, and reactivity of the waste. Both conservative and nonconservative models were applied in an effort to produce a spectrum of results.

Intruder radiological doses from the depleted uranium waste stream are large at all times given the assumptions used in the Draft Environmental Impact Statement for 10 CFR Part 61. The doses increase as daughters are produced from the initial uranium waste until about 2 million years. Calculated doses would remain essentially constant for a very long time after 2 million years, until the radiological content begins to decrease from decay of U-238 and U-235.

Off-site doses are large for the UF_4 waste, since UF_4 is moderately soluble and reactive. UF_4 is clearly unstable in ground-water, and reacts to produce uranium oxides and hydrofluoric acid. There is uncertainty about the rate of the reaction under disposal conditions. The reaction proceeds "slowly" on conventional laboratory time scales; however, these time scales are fast in terms of ground-water transport analyses. The potntial therefore exists to have sufficiently rapid reaction in the disposal facility to (1) cause severe ground-water contamination by uranium and acidification, (2) seriously degrade the function of engineered structures or containers, and (3) produce air contamination by HF. Even slow releases of HF (releases over 10,000 years) produced conditions associated with high solubility limits of the waste.

Off-site doses are greatly reduced for oxide wastes. U_3O_8 is not stable in ground water, and consideration should be given to an alternative waste form, such as schoepite. Given the generic assumptions used in this analysis, even schoepite was unable to meet a 25 mrem/yr dose limitation. However, it is possible that this waste form may give acceptable off-site doses for specific site conditions.

Uranium solubilities can vary widely, even under fairly well established ground-water chemical conditions. As an example, a recent performance assessment was performed of an arid site for which substantial site-specific ground-water characterization was available; in this performance assessment the uranium solubility ranged over five orders of magnitude [Chu and Bernard, 1991]. It is clear that on a generic basis little can be done to specify a solubility range with much confidence. However, it should be noted that in this report we have spanned a wide range of solubilities. In the intruder analyses, it was effectively assumed that the waste did not move from its initial location; this situation would be associated with low solubility. We also analyzed the high solubility condition in Sections 3.3.2. Intermediate solubility conditions were evaluated at differing levels of complexity in Sections 3.3.3 and 3.3.4. Quote

The varying conditions illustrate an important point about narrowing the uncertainty in solubility: if we are confident that the solubility is low, high intruder doses will be calculated; if we are confident about a high solubility, off-site doses will be high. Intermediate solubilities are likely to produce relatively high doses in both analyses. Furthermore, if the intrusion analyses take credit for some waste leaching into the ground water, the analysis should probably include an on-site well in the evaluation.

The chemical toxicity of the depleted uranium is a greater limitation on the disposal than the radiological doses. Significant toxic effects to the kidney are observed even for contaminant intake levels that pose negligible radiological risk.

The acceptability of near-surface disposal for large quantities of depleted uranium depends upon the regulatory time frame applied to the analysis. Risks associated with the disposal grow for about 2 million years. Truncation of the analysis prior to that time will not capture the potential peak doses, but extrapolation of current conditions to 2 million years is of dubious merit for a near-surface facility. The potential exists for more adverse conditions than present to exist at the site over that long time frame. Quote

7.0 References

Chu, M. S. Y., M. W. Kozak, J. E. Campbell, and B. M. Thompson, A Self-Teaching Curriculum for the NRC/SNL Low-Level Waste Performance Assessment Methodology, NUREG/CR-5539, SAND90-0585, Sandia National Laboratories, 1990.

Chu, M.S.Y, and E. A. Bernard, Waste Inventory and Preliminary Source Term Model for the Greater Confinement Disposal Site at the Nevada Test Site, SAND91-0170, Sandia National Laboratories, 1991.

Codell, R. B., K. T. Key, and G. Whelan, A Collection of Mathematical Models of Dispersion in Surface Water and Ground Water, NUREG-0868, U.S. Nuclear Regulatory Commission, 1982.

Dean, J.A., Lange's Handbook of Chemistry, 12th ed., McGraw-Hill, New York, 1979.

Eckerman, K. F., A. B. Wolbarst, and A. C. B. Richardson, Limiting Values of Radionuclide Intake and Air Concentration and Dose Conversion Factors for Inhalation, Submersion, and Ingestion, EPA-520/1-88-020, Oak Ridge National Laboratory, 1988.

EG&G, HP Manual of Good Practices for Uranium Facilities, EGG-2530, EG&G Idaho, Inc., 1988.

Forstom, J. M., and D. J. Goode, De Minimis Waste Impacts Analysis Methodology, NUREG/CR-3585, U.S. Nuclear Regulatory Commission, 1986.

Gershey, E. L., R. C. Klein, E. Party, and A. Wilkerson, Low-Level Radioactive Waste: From Cradle to Grave, Van Nostrand, New York, 1990.

IAEA, Evaluating the Reliability of Predictions Made Using Environmental Transfer Models, IAEA Safety Series 100, International Atomic Energy Agency, 1989.

Kozak, M. W. "A Comparison Between Simple and Detailed Methods for Analyzing Releases of Radionuclides to Ground Water From Low-Level Waste Facilities," Waste Management '91, Tucson, Feb. 24-28, 1991.

Kozak, M. W., M. S. Y. Chu, P. A. Mattingly, J. D. Johnson, and J. T. McCord, Background Information for the Development of a Low-Level Waste Performance Assessment Methodology: Implementation and Assessment of Computer Codes, NUREG/CR-5453, SAND89-2505, Volume 5, Sandia National Laboratories, 1990a.

Kozak, M. W., M. S. Y. Chu, and P. A. Mattingly, A Performance Assessment Methodology for Low-Level Waste Facilities, NUREG/CR-5532, SAND90-0375, Sandia National Laboratories, 1990b.

Lemons, T. R., C. R. Barlow, J. M. Begovich, F.C. Huffman, P.M. Kannan, J.D. McGaigh, J.H. Pashley, J.J. Staley, and W.J. Spetnagel, The Ultimate Disposition of Depleted Uranium, K/ETO-44, Uranium Enrichment Organization, Oak Ridge, 1990.

Leone, S. M., E. W. Richardson, R. G. Knight, C. P. McGinnis, and J. H. Pashley, Long Term Disposal of Enrichment Plant Tails, K/ET-131, Oak Ridge Gaseous Diffusion Plant, Oak Ridge, TN 1978.

McGuire, S.A., Chemical Toxicity of Uranium Hexafluoride compared to Acute Effects of Radiation, NUREG-1391, U.S. Nuclear Regulatory Commission, 1991.

Nazaroff, W.W., "Radon Transport from Soil to Air," Reviews of Geophysics, 30, 137-160, 1992.

NCRP, Measurement of Radon and Radon Daughters in Air, National Council on Radiation Protection, Publication 97, Bethesda, 1988.

NCRP, Control of Radon in Houses, National Council on Radiation Protection, Publication 103, Bethesda, 1989.

NRC Regulatory Guide 1.109, Calculation of Annual Doses to Man from Routine Releases of Reactor Effluents for the Purpose of Evaluating Compliance with 10 CFR Part 50, Appendix I, U.S. Nuclear Regulatory Commission, October 1977.

NRC Regulatory Guide 1.111, Methods for Estimating Atmospheric Transport and Dispersion of Gaseous Effluents in Routine Releases From Light-Water-Cooled Reactors, U.S. Nuclear Regulatory Commission, July 1977b.

NRC, Final Generic Environmental Impact Statement on Uranium Milling, NUREG-0706, U.S. Nuclear Regulatory Commission, 1980.

NRC, Draft Environmental Impact Statement on 10 CFR Part 61, NUREG-0782, Vol.1, U.S. Nuclear Regulatory Commission, 1981.

O'Neal, B. L., and C. E. Lee, IMPACTS-BRC, Version 2.0, NUREG/CR-5517, SAND89-3060, U. S. Nuclear Regulatory Commission, 1990.

Oztunali, O. I., G. C. Re, P. M. Moskowitz, E. D. Picazo, and C. J. Pitt, Data Base For Radioactive Waste Management, NUREG/CR-1759, 1981.

Oztunali, O. I., and G. W. Roles, De Minimis Waste Impacts Analysis Methodology, NUREG/CR-3585, Volume 1, U.S. Nuclear Regulatory Commission, 1984.

Oztunali, O. I. and G. W. Roles, Update of Part 61 Impacts Analysis Methodology, NUREG/CR-4370, 1986.

Rao, R. R., M. W. Kozak, J. A. Rollstin, C. P. Harlan, S. D. Bensonhaver, and V. Austin, IMPACTS-BRC, Version 2.1: Code and Data Verification, NUREG/CR-5797, SAND91-2226, U.S. Nuclear Regulatory Commission, 1992.

Sax, N. I., and R. J. Lewis, Dangerous Properties of Industrial Materials, 7th ed., Van Nostrand Reinhold, New York, 1989.

Turner, D. B., Workshop of Atmospheric Estimates, Public Health Service Publication No. 999-AP-26, U.S. Department of Health, Education, and Welfare, 1970.

Vogt, K-J "Empirical Investigations of the Diffusion of Waste Air Plumes in the Atmosphere," Nuclear Technology 34, 43 (1977).

APPENDIX A: Geochemical Characteristics

The description given in this appendix has been adopted from the draft problem description used by NRC in analyses related to the Branch Technical Position on low-level waste performance assessment during 1992. Data are from an actual site in the southeastern United States. However, the site does not necessarily represent the same site analyzed for the DEIS [NRC, 1981].

2.6.1 Water Chemistry

Chemical measurements of the ground water from all three hydrologic units, surface water, and rainwater have been completed. Analyses of temperature, pH, Eh, conductivity, carbonate alkalinity, dissolved oxygen, nutrients (NO_3, NO_2, PO_4), silicate, major cations, major anions, trace elements, and dissolved organic carbon compounds were completed on more than 50 different well and stream samples (see Table 3).

The ground water, which on average has a relatively low pH (about 5.8), varies between 4.5 and 7.3. Wells that tap the deeper hydrogeologic unit (unit 3) tend to have water with a higher alkalinity and pH than shallower ground water, but some deep wells show low pH (and low alkalinity). Total dissolved solids (TDS) values are low (10-20 ppm), as are specific conductivity values (~52±51 umho/cm at 25 C). Dissolved oxygen is around 5-10 ppm. Virtually all the water temperatures range from 16-22 °C.

The redox of the fluids is about 500 mV, hence the ground waters are oxidizing relative to NO_3/NH_4, Fe(III/II), SO_4/H_2S, and CO_2/CH_4, but reducing relative to Mn (IV/II) and NO_3/N_2. The redox poise of the ground waters is close enough to the nitrate/ammonia couple that ammonia is detected is some well water. Iodine exists as the iodide species in the system.

The major cations are Na, K, Ca, and Mg, with Ca showing the greatest variability (which determines the alkalinity). The major anions are Cl, NO_3, and SO_4. As reflected in the low TDS and conductivity, none of the major anions exceeds 20 ppm. Silicate ranges from < 1 to 12 ppm, with most values around 6 ppm. Both Fe and Mn tend to be around 30±25 ppb, with a few wells (10-15% of the total of 50 wells) displaying higher values (140 to 1600 ppb Fe and 100-780 ppb Mn). Nitrate and nitrite range from 0.02 - 1 ppm with a few ground water samples (4) being in the 2-4 ppm range. Dissolved carbon (DOC) tends to be around 6 ppm.

Surface waters have a similar chemical composition to the ground water, but the concentrations for major ions and trace elements tend to be in the low range for the ground waters. In addition, pH tends to be somewhat higher than average ground water (6.0 - 6.8). Rainwater has the lowest concentrations of all the different species and ions.

Table A.1: Typical ground water chemistry.

Variable (units)	Average Value	Range
Temperature (°C)	18.0	16 - 22
pH	5.8	4.5 - 7.3
Eh (mV)	500	350 - 700
Conductivity (μmho/cm)	50	10 - 250
Dissolved O_2 (ppm)	6	5 - 10
Total Dissolved Solids	13	10 - 20
(ppm)	6	NA
Dissolved Organic Carbon	6	0.1 - 12
(ppm)		
Silicate (ppm)		
	6	<1 - 17
Cations (ppm)	2	0.2 - 10
Na	3	<0.1 - 40
K	0.4	<0.01 - 3
Ca	0.03	0.01 - 1.6
Mg	0.03	0.005 - 0.78
Fe	0.2	0 - 1.0
Mn	0.1	0 - 0.5
Ba		
Sr		
	0.1	0 - 0.4
Anions (ppm)	4	0.5 - 16.0
F	0.02 - 1	0.02 - 4
Cl	2	0.2 - 20
NO_3 + NO_2	*	0.3 - 2.2
SO_4		
PO_4		

* Too few values to obtain representative average

2.6.2 Geochemistry of Soils and Rock Units

The near surface soils at the site (1st hydrogeologic unit - upper 20 m) are well drained silty-sands, with a grain size distribution of ~ 70% sand and 30% clay. The disposal units are placed in the upper 5 m of this unit. The mineralogical composition, as determined by X-ray diffraction, is mainly Quartz (67%) and Kaolinite (26%), but some Mica (5-10%) also occurs. Other clays, such as Potassium Feldspar, Plagioclase Feldspar, Chlorite, Illite, and mixed-layer clays minerals constitute less than 5% of the total minerals. Typically the moisture content is about 20%, but can range from <10% to saturation. The cation exchange capacity (CEC) of these soils is about 2mEq/100g, which is consistent with its mineralogy. Note that there is no direct correlation of clay (Kaolinite) content with CEC. Hence, variations in clay content down core will not necessarily be reflected in variations

in sorption. In some other surface soil samples higher values have been measured (up to 6mEq/100g). The organic carbon content is low, about 0.03%. Extractable iron is about 2000-3000 ppm. The soils are acidic and pore water that has equilibrated with them as a pH of 4.9-5.0. The soil properties over larger scales (100's of meters) are heterogeneous due to the presence of clay lenses, however the general mineralogical facies appears to be the same within unit 1.

Deeper hydrogeologic units (2-3) at the site (extending from 20 m to 100 m below ground surface) are qualitatively similar to the 1st unit, but the grain sizes and mixtures of sand silt and clay are variable. In addition, clay and silt lenses occur irregularly. The third hydrogeologic unit contains some carbonate and ground water obtained from it tends to have a higher alkalinity. It is a suitable source of municipal drinking water.

Table A.2: Mineralogical analysis of typical soils in borehole.

	Mineralogy.				Grain Size	
Depth (m)	% Quartz	% Kaolinite	Cation Exchange Capacity (mEq/100g soil)	wt% H_2O	% Sand	% Clay
1.52	72	33	1.7	10.8	75	25
3.05	48	36	2.8	16.3	51	49
4.57	60	30	2.6	14.8	66	34
6.10	58	33	3.1	15.4	56	44
7.62	50	40	2.1	20.0	61	39
9.14	58	30	1.5	17.0	63	37
10.67	69	30	1.3	21.3	73	27
12.19	61	33	1.9	20.6	69	31
13.72	69	26	2.7	18.9	71	29
15.24	73	27	2.3	23.7	72	28
16.76	73	26	2.7	23.3	76	24
18.29	80	16	2.3	24.1	83	17
19.81	85	2	2.6	23.4	85	15
21.34	86	7	2.1	29.9	84	16
Mean ± 1 std dev.	67 ± 11	26 ± 11	2.3 ± 0.5	20.0 ± 5.0	70 ± 10	30 ± 10

* = percent minerals determined by X-ray diffraction