Non Proprietary Version

GENE-0000-0045-9761-01
Revision 1
November 2005
Class I

LMS Report
Quad Cities New Design Steam Dryer
Dryer #1, Dryer #2 and Finite Element Model Outer Hood
Frequency Response Functions
Extension to 200 Hz, Revision 3

IMPORTANT NOTICE REGARDING THE CONTENTS OF THIS REPORT

Please Read Carefully

NON-PROPRIETARY NOTICE

This is a non-proprietary version of the document GENE-0000-0045-9761-01-P, Revision 1, which has the proprietary information removed. Portions of the document that have been removed are indicated by an open and closed bracket as shown here [[ ]].

IMPORTANT NOTICE REGARDING THE CONTENTS OF THIS REPORT

Please Read Carefully

The only undertakings of the General Electric Company (GENE) with respect to the information in this document are contained in the contract between EXELON and GENE, and nothing contained in this document shall be construed as changing the contract. The use of this information by anyone other than EXELON or for any purpose other than that for which it is intended, is not authorized; and with respect to any unauthorized use, GENE makes no representation or warranty, express or implied, and assumes no liability as to the completeness, accuracy, or usefulness of the information contained in this document, or that its use may not infringe upon privately owned rights.

Quad Cities New Design Steam Dryer
Dryer #1, Dryer #2 and Finite Element Model Outer Hood
Frequency Response Functions
Extension to 200 Hz, Revision 3

October 27, 2005

Principal Contributors

Tom Boermans – LMS
Eike Brechlin - LMS
Mike Neiheisel – LMS
Bart Vandenplas - LMS

Table of Contents

List of Tables 3
List of Figures 3
Acronyms 4
1.0 Executive Summary 5
2.0 Scope 6
3.0 Background 6
4.0 Purpose 7
5.0 Experimental Discussion 7
5.1 Experimental Setup Dryer #1 7
5.1a Test Configuration 7
5.1b Data Acquisition System and Instrumentation 8
5.1c Sensor Locations 9
5.1d Frequency Response Function Measurement Settings 11
5.2 Experimental Setup Dryer #2 11
5.2a Test Configuration 11
5.2b Data Acquisition System and Instrumentation 12
5.2c Sensor Locations 13
5.2d Frequency Response Function Measurement Settings 15
5.3 Specific Differences Between Dryer #1 Test and Dryer #2 Test and Test Uncertainties Present in Results from Both Dryers 15
6.0 Test Results 18
6.1 90° Hood Component Comparison 18
6.2 270° Hood Component Test Comparison 21
7.0 Correlation 24
7.1 Procedure 24
7.2 Geometric Correlation 24
7.3 FRF Correlation 25
7.3.1 FRF Synthesis using ANSYS 25
7.3.2 FRF synthesis using LMS/Link 27
7.3.3 Validation of results 29
7.3.4 Individual FRFs included in Summations 30
7.4 Changes to As-received model 31
8.0 Correlation of Test Results and FE Results 32
8.1 90° Hood Component Comparison 34
8.2 270° Hood Component Comparison 40
9. 0 Summary and Conclusions 45
10.0 References 46

Appendix A 270° Outer Hood Narrow Frequency Range 47

List of Tables

Table 1: Degrees of Freedom used for Dryer #1, Dryer #2 and Summation FRFs 31
Table 2a: Dryer #2 Hood Damping Results at Low Water Level 33
Table 2b: Dryer #2 Hood Damping Results at Low Water Level 34

List of Figures

Figure 1: Wireframe for Dryer #1 90° Hood 10
Figure 2: Wireframe for Dryer #1 270° Hood 10
Figure 3: Wireframe for Dryer #2 90° Hood 14
Figure 4: Wireframe for Dryer #2 270° Hood 14
Figure 5: Summation FRF for 90° Hood, all 3 directions 19
Figure 6: Summation FRF for 90° Hood, Global X direction (Perpendicular to 90° Skirt Panel Surface) 19
Figure 7: Summation FRF for 90° Hood, Global Y direction (Horizontal Parallel to90° Skirt Panel Surface) 20
Figure 8: Summation FRF for 90° Hood, Global Z direction (Parallel to vertical dryer axis) 20
Figure 9: Summation FRF for 270° Hood, all 3 directions 22
Figure 10: Summation FRF for 270° Hood, Global X direction (Perpendicular to 270° Skirt Panel Surface) 22
Figure 11: Summation FRF for 270° Hood, Global Y direction (Horizontal Parallel to 270° Skirt Panel Surface) 23
Figure 12: Summation FRF for 270° Hood, Global Z direction (Parallel to vertical dryer axis) 23
Figure 13: Overview of Synthesis Process 28
Figure 14: Addition of first 6 partial FRFs for input point "hda:182" and output point "hda:101", in X-direction. 29
Figure 15: comparison of FULL and Mode Superposition calculation method in Ansys (3% damping case) 30
Figure 16: Summation FRF for 90° Hood, all 3 directions 36
Figure 17: Summation FRF for 90° Hood, Global X direction (Perpendicular to 90° Skirt Panel Surface) 36
Figure 18: Summation FRF for 90° Hood, Global Y direction (Horizontal Parallel to 90° Skirt Panel Surface) 37
Figure 19: Summation FRF for 90° Hood, Global Z direction (Parallel to vertical dryer axis) 37
Figure 20: Summation FRF for 90° Hood, all 3 directions 38
Figure 21: Summation FRF for 90° Hood, Global X direction (Perpendicular to 90° Skirt Panel Surface) 38
Figure 22: Summation FRF for 90° Hood, Global Y direction (Horizontal Parallel to 90° Skirt Panel Surface) 39
Figure 23: Summation FRF for 90° Hood, Global Z direction (Parallel to vertical dryer axis) 39
Figure 24: Summation FRF for 270° Hood, all 3 directions 41
Figure 25: Summation FRF for 270° Hood, Global X direction (Perpendicular to 270° Skirt Panel Surface) 41
Figure 26: Summation FRF for 270° Hood, Global Y direction (Horizontal Parallel to 270° Skirt Panel Surface) 42
Figure 27: Summation FRF for 270° Hood, Global Z direction (Parallel to vertical dryer axis 42
Figure 28: Summation FRF for 270° Hood, all 3 directions 43
Figure 29: Summation FRF for 270° Hood, Global X direction (Perpendicular to 270° Skirt Panel Surface) 43
Figure 30: Summation FRF for 270° Hood, Global Y direction (Horizontal Parallel to 270° Skirt Panel Surface) 44
Figure 31: Summation FRF for 270° Hood, Global Z direction (Parallel to vertical dryer axis) 44

Acronyms

EMA	.....	Experimental Modal Analysis
FE	.....	Finite Element
FEA	.....	Finite Element Analysis
FRF	.....	Frequency Response Function
GE	.....	General Electric
GENE	.....	General Electric Nuclear Energy
MAC	.....	Modal Assurance Criterion
MPT	.....	Mode Pair Table
NPT	.....	Node Pair Table
QC1	.....	Quad Cities Unit 1
QC2	.....	Quad Cities Unit 2

1.0 Executive Summary

Experimental modal analyses were performed on new design Dryers #1 and #2, the dryers intended for Quad Cities Units #2 and #1 (QC2 and QC1), respectively, and the results were compared to finite element analysis (FEA) results on a frequency response function basis. Previously, results had been compared to approximately 100 Hz. This comparison extends the frequency range to 200 Hz. Of specific interest is the frequency range of 150 Hz to 160 Hz at operating conditions/150 Hz to 180 Hz for the ambient conditions of the experimental modal analysis.. The frequency range of 150 Hz to 180 Hz is based on 2 factors: 1) the increase in modulus from plant conditions to ambient conditions produces a frequency range of 160 Hz to 172 Hz, and 2) accounting approximately for +/-10% frequency variation of the FE model from the actual structure extends the 160 Hz to 172 Hz range to a range of 150 Hz to 180 Hz. The finite element analysis included a modal analysis and, using those modes from the modal analysis, a mode superposition to obtain FRFs that match the input and response points of the test data.

The correlation between the Dryer #1 test and the Dryer #2 test is considered to be good to very good. The amplitude of the FRFs, the frequency peaks that indicate resonances and the trends of the FRFs are very similar. The correlation between the test and FE results is considered to be good for a structure of this complexity in the frequency range of interest from 100 to 200 Hz. Both the 90° hood and the 270° hood show the FE prediction being very similar to the test results in both amplitude and trend of the curve. This similarity holds true for the overall summation FRF for each hood and for summation FRFs for each direction.

In summary:

1. The dryers are structurally similar. Section 6.0 contains some small differences in FRF responses.
2. The FE adequately represents the actual dryer. The FRF frequency content and amplitudes are very similar in the frequency range of interest. Section 8.0 describes some small differences.

2.0 Scope

This document summarizes the extension to 200 Hz of the comparison of the experimental measurements on Dryers #1 and #2 and finite element results performed to compare the finite element model of the new design steam dryer. The experimental modal analysis on Dryer #1 was conducted during early April 2005, and the experimental modal analysis on Dryer #2 was conducted during early May 2005. The finite element analysis was conducted during April and May 2005 and during September and early October 2005. The following items are included in this document:

1. Description of the testing performed
2. Presentation of experimental data
3. Description of the finite element analysis
4. Comparison of experimental results with finite element results

3.0 Background

This section provides background information intended to help the reader understand the events that precipitated this report.

After the initial correlation between FE results and test results was performed, the steam dryers were installed in Quad Cities Unit 1 (QC1) and Quad Cities Unit 2 (QC2) in June and May, 2005. Dryer #1, the instrumented dryer, was installed in QC2. Data acquired during the power ascension and while operating at a steady-state condition for QC2 show excitation on the dryer of significant amplitude in the 150 Hz to 160 Hz range. Earlier correlation efforts focused on the frequency range below 100 Hz so it was requested that the frequency range of 100 Hz to 200 Hz, and specifically the region around 150 Hz to 160 Hz at operating conditions/150 Hz to 180 Hz for the ambient conditions of the experimental modal analysis, be examined in greater detail. The frequency range of 150 Hz to 180 Hz is based on 2 factors: 1) the increase in modulus from plant conditions to ambient conditions produces a frequency range of 160 Hz to 172 Hz, and 2) accounting approximately for +/-10% frequency variation of the FE model from the actual structure extends the 160 Hz to 172 Hz range to a range of 150 Hz to 180 Hz.

4.0 Purpose

This document has the main objectives of showing the correlation between Dryer #1 and Dryer #2 test measurements on the outer hoods and of showing the correlation between test measurements and finite element results on the outer hood in the frequency range of 100 Hz to 200 Hz and more specifically near 150 Hz to 180 Hz, a range that bounds the equivalent range of 150 Hz to 160 Hz for the dryer at operating conditions

The comparison of the test results between Dryer #1 and Dryer #2 shows good correlation, and the comparison of the test results to FE results shows good correlation as well.

5.0 Experimental Discussion

The following sections describe the experimental modal analyses on Dryer #1, Dryer #2 and differences between the two.

5.1 Experimental Setup Dryer #1

This section describes the test configuration and environment, identifies the instrumentation and data acquisition equipment used, and identifies the sensor locations. The setup and testing follows the requirements outlined in Reference 1, Steam Dryer Hammer Test Specification, GE 26A6380, Revision 1. Reference 2 is the original Dryer #1 test and FE correlation report.

5.1a Test Configuration

Steam Dryer #1, the first dryer with the new design, was tested at J.T. Cullen in Fulton, Illinois, a fabrication facility that served as the location for final assembly, installation of the final modifications and installation of the permanent sensors. For the experimental modal test, the steam dryer was supported in a water tank by 4 tripods with extensions that fit into its main support lug sockets. These tripods were welded to metal plates which were bolted to the concrete floor of the fabrication shop. One item to note is that, partway through the testing, the dryer was removed from its supports and transferred to another location for laser dimensional measurements. When it was removed, 2 of the supports had to be detached where they were

welded at the floor. When it was returned to its supports, a third support had to be detached from its weld at the floor to align the dryer properly. Data taken before and after this move indicates that some of the low frequency (below 10 Hz) suspension modes were not at exactly the same frequency before and after this move, making the effort to match the actual support stiffness in the FE model more difficult. A circular tank with a liner was used to hold water for the testing with water. The tank's inner diameter replicated the inner diameter of the reactor pressure vessel (RPV) at the plant to attempt to match the hydrostatic loading at the plant. Testing was performed at 4 different water levels:

1. Dry – no water
2. LWL – Low Water Level – water up to 32.5 inches above the bottom of the bottom flange of the dryer.
3. NWL – Normal Water Level – water up to 36.5 inches above the bottom of the bottom flange of the dryer.
4. HWL – High Water Level – water up to 40.5 inches above the bottom of the bottom flange of the dryer.

Only Low Water Level results are shown in this report.

All testing was performed at ambient conditions at the test site, with the temperature ranging from 50° F to 75° F

5.1b Data Acquisition System and Instrumentation

The following instrumentation was used to perform the experimental modal analysis and the static test:

1. PCB Model 356A22, 356B08 and 356A15 triaxial accelerometers, and Model 333B30, 333A32, 333B32 and 352C43 single-axis accelerometers

2. PCB Model 086D50 Impact Hammer - after preliminary measurements, the softest hammer tip was selected. At the start of testing on Dryer #1, it was believed that obtaining very good low frequency data was more important than extending the frequency range of the results; however, subsequent review and discussion of the results produced a decision to use the medium tip for Dryer #2.

The following equipment was used to record and analyze the test data:

1. A 116 channel LMS SCADAS III dynamic signal analyzer (2 SCADAS III Model 316 front ends in a Master-Slave configuration) with PQA and PQFA modules was used to provide ICP power to and receive the signal from all of the ICP sensors. The system was controlled by a personal computer using LMS Test.Lab 5A software, specifically the Modal Impact, Modal Analysis and Spectral Acquisition modules of software.

5.1c Sensor Locations

The following items detail the contents of Reference 2, Figures 9 through 25 which are pictures that identify the input and response locations used for the experimental modal analysis and static load test.

- Figure 1 shows the Dryer #1 90° hood test wireframe
- Figure 2 shows the Dryer #1 270° hood test wireframe
- Reference 2, Figures 9 through 17 are the 90° hood
- Reference 2, Figures 18 through 25 are the 270° hood

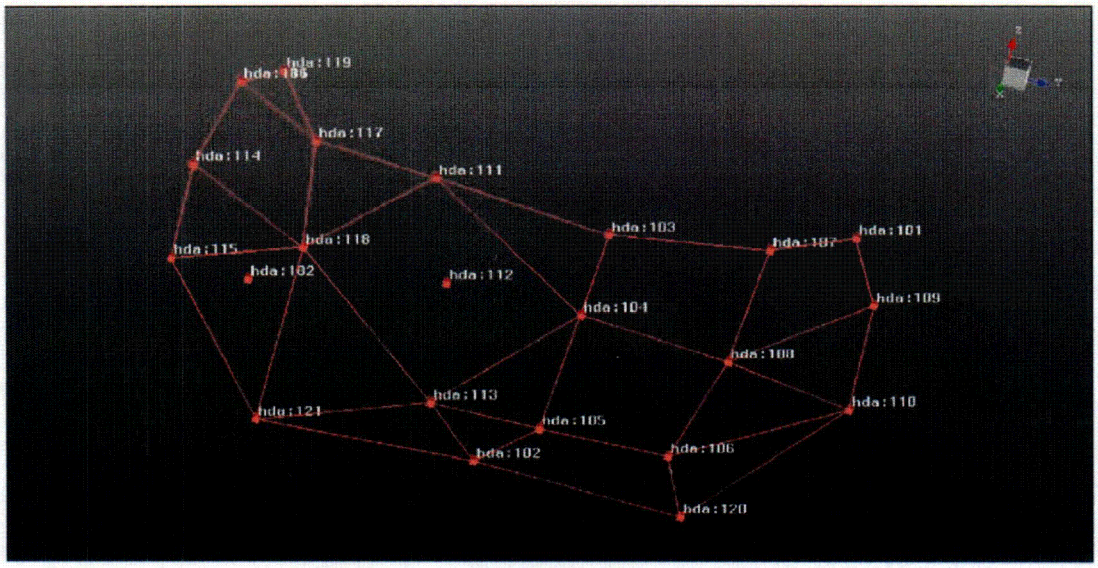

Figure 1: Wireframe for Dryer #1 90° Hood

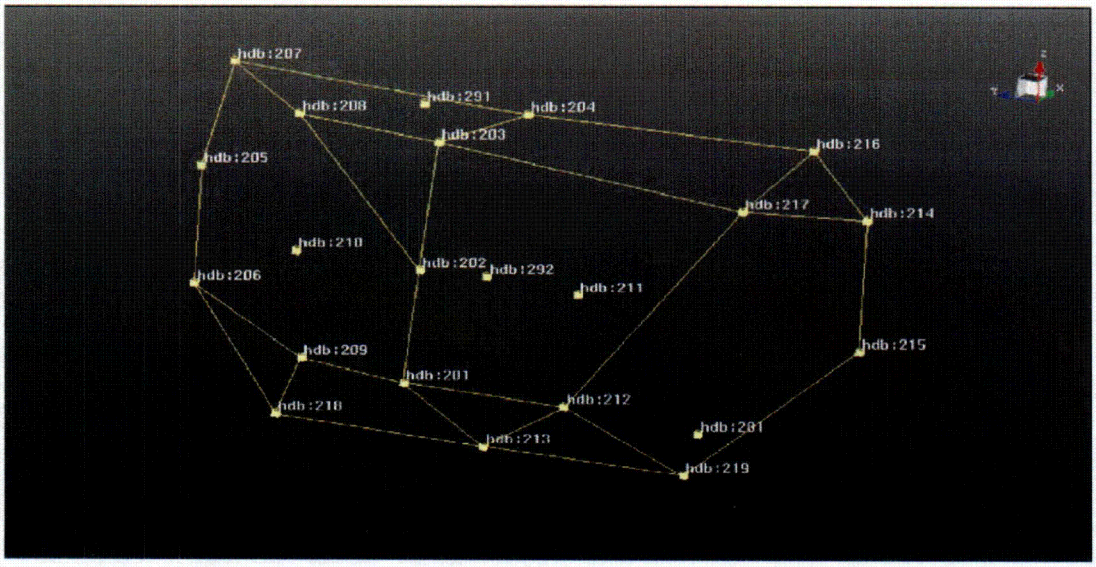

Figure 2: Wireframe for Dryer #1 270° Hood

5.1d Frequency Response Function Measurement Settings

The signal processing parameters used for data acquisition were the following:

- 5, 7 or 10 averages
- Force window of 5% to 20% on the input
- Exponential window of 3% to 20% on the responses
- Effective Frequency bandwidth of 400 Hz (actual bandwidth setting 512 Hz, sampling frequency of 1024 Hz)
- 4096 Spectral lines (0.125 Hz resolution/8.0 second time length)
- 0.1 second pretrigger on the hammer input

For the measurements, the following results were saved:

- Frequency Response Function
- Coherence
- Input Autopower

5.2 Experimental Setup Dryer #2

This section describes the test configuration and environment, identifies the instrumentation and data acquisition equipment used, and identifies the sensor locations. The setup and testing follows the requirements outlined in Reference 1, Steam Dryer Hammer Test Specification, GE 26A6380, Revision 1. Reference 3 is the original Dryer #2 test and FE correlation report.

5.2a Test Configuration

Dryer #2, the second dryer with the new design, was tested at J.T. Cullen in Fulton, Illinois, a fabrication facility that served as the location for the installation of the final modifications and for final assembly. For the experimental modal test, the steam dryer was supported in a water tank by 4 tripods with extensions that fit into its main support lug sockets. These tripods were welded to metal plates which were bolted to the concrete floor of the fabrication shop. The same tripods that were used for Dryer #1 were used for Dryer #2, and they were attached to the facility floor in the same manner; however, the same specific tripods were not necessarily used in the same locations as for Dryer #1. A circular tank with a liner was used to hold water for the testing with water. The tank's inner diameter replicated the inner diameter of the reactor pressure

vessel (RPV) at the plant to attempt to match the hydrostatic loading at the plant. Testing was performed at 2 different water levels:

1. Dry – no water
2. LWL – Low Water Level – water up to 32.5 inches above the bottom of the bottom flange of the dryer.

Only Low Water Level results are shown in this report.

All testing was performed at ambient conditions at the test site, with the temperature ranging from 60° F to 75° F.

5.2b Data Acquisition System and Instrumentation

The following instrumentation was used to perform the experimental modal analysis on Dryer #2:

3. PCB Model 333A65, 356A22, 356B08, 356B18 and 356A15 triaxial accelerometers, and Model 333B30, 333A32, 333B32, 352C43 and 357B11 single-axis accelerometers

4. PCB Model 086D50 Impact Hammer – Based on operating experience from the Dryer #1 experimental modal and review of its results, the medium hammer tip was selected.

5. PCB Model 086C20 Impact Hammer – This impact hammer was used for the additional drain channel and skirt panel measurements where an impact was performed on a skirt panel or drain channel above the tank upper edge, and a response was measured underwater on the specific skirt panel or on a drain channel. The medium tip was used.

The following equipment formed the Data Acquisition System (DAS) and was used to record and analyze the test data:

2. A 116 channel LMS SCADAS III dynamic signal analyzer (2 SCADAS III Model 316 front ends in a Master-Slave configuration) with PQA and PQFA modules was used to provide ICP power to and receive the signal from all of the ICP sensors. The system was

controlled by a personal computer using LMS Test.Lab 5A software, specifically the Modal Impact, Modal Analysis and Spectral Acquisition modules of software.

5.2c Sensor Locations

The following items detail the contents of Reference 3, Figures 6 through 22 which are pictures that identify the input and response locations used for the experimental modal analysis and that show the test wireframe.

- Figure 3 shows the Dryer #2 90° hood test wireframe
- Figure 4 shows the Dryer #2 270° hood test wireframe
- Reference 3, Figures 6 through 13 show the 90° hood
- Reference 3, Figures 14 through 22 are the 270° hood

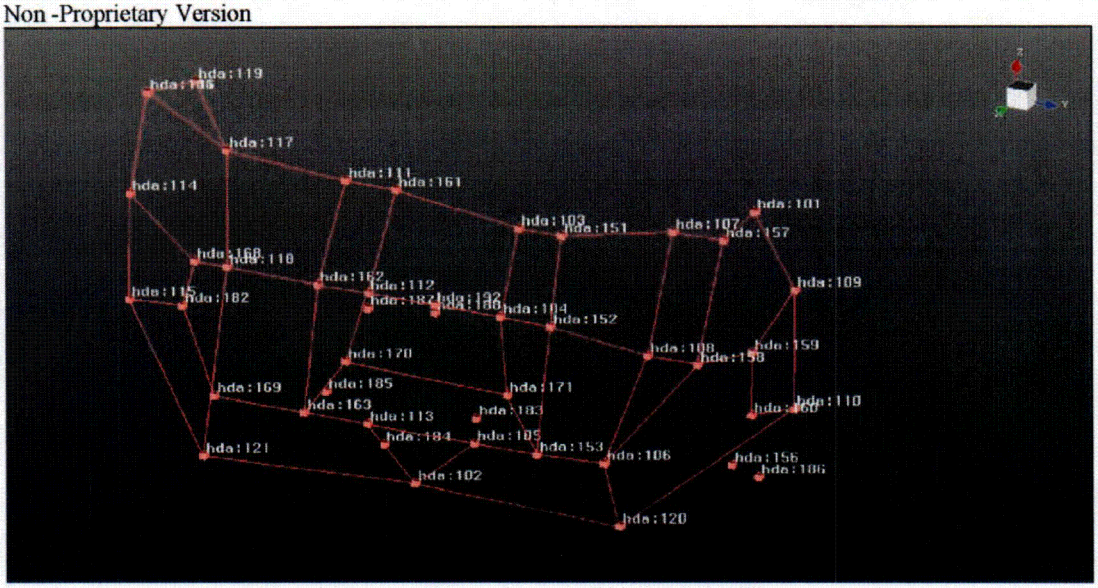

Figure 3: Wireframe for Dryer #2 90° Hood

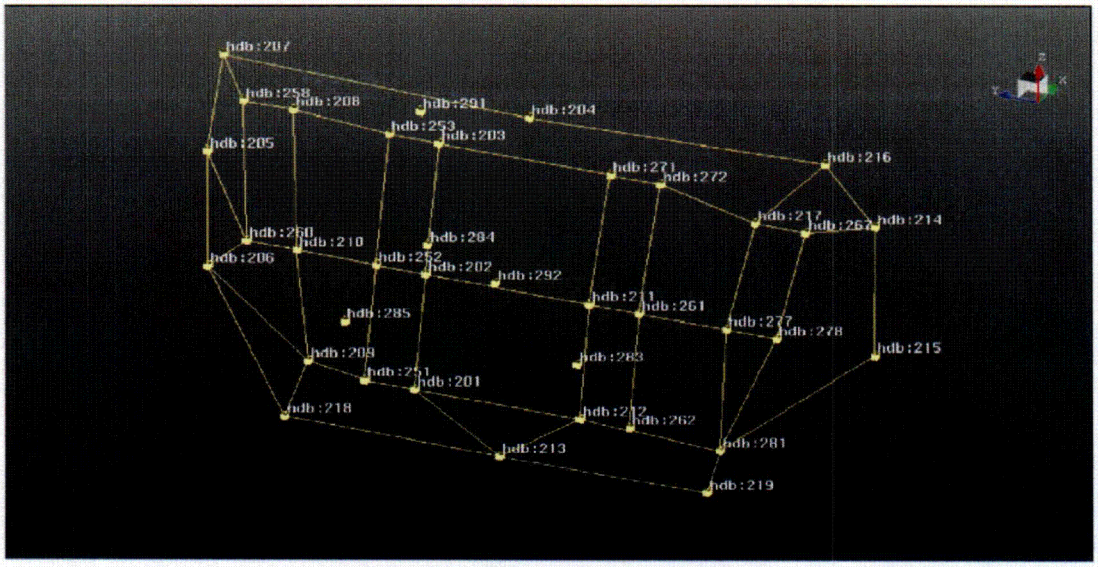

Figure 4: Wireframe for Dryer #2 270° Hood

5.2d Frequency Response Function Measurement Settings

The signal processing parameters used for data acquisition were the following:

- 5 averages
- Force window of 20% on the input
- Exponential window of 3% on the responses
- Effective Frequency bandwidth of 400 Hz (actual bandwidth setting 512 Hz, sampling frequency of 1024 Hz)
- 4096 Spectral lines (0.125 Hz resolution/8.0 second time length) (8192 spectral lines for bandwidth settings of 1024 Hz)
- 0.1 second pretrigger on the hammer input

For the measurements, the following results were saved:

- Frequency Response Function
- Coherence
- Input Autopower
- Response Autopowers

5.3 Specific Differences Between Dryer #1 Test and Dryer #2 Test and Test Uncertainties Present in Results from Both Dryers

This section highlights specific differences between the Dryer #1 Test and the Dryer #2 Test

- Dryer #1 testing obtained more complete data sets at all 4 water levels, while Dryer #2 primarily focused on Low Water Level (LWL)and Dry; however, this report only contains LWL results for both dryers.
- The sequencing of testing differed from Dryer #1 to Dryer #2. The testing for Dryer #1 used accelerometers scattered across the whole dryer for 4 sets or groups of data acquisition while the testing for Dryer #2 used groups that focused on a single component. The measurements on the outer hoods for Dryer #1 were made within the 4 sets, while the measurements on the outer hoods for Dryer #2 were contained in 1 set each for the 90° hood and the 270° hood. In other words, for Dryer #2, the complete outer hood was measured simultaneously. The input levels for the 4 sets of Dryer #1 did

vary, with 3 runs having similar levels and 1 run having an input force level that was lower by a factor of 1.5 to 8 across the frequency range of interest. The difference in sequencing can contribute to variability in amplitude among the FRFs for Dryer #1 that would not occur for Dryer #2.

- Exact measurement locations (hammer input and acceleration response locations) between Dryer #1 and Dryer # 2 differ within the accuracy of measurements made by personnel using tape measures (and for Dryer #2 using pictures of Dryer #1 as references). The measurement locations are expected to be within a radius of 3 inches from dryer to dryer. For the frequency range of interest, 150 Hz to 180 Hz, this location difference is expected to be insignificant as differences from dryer to dryer cancel out and as both dryers display many small amplitude modes in this range, creating a FRF that is flat and increasing slightly in amplitude with frequency, making the general amplitude trend of the FRF more important in comparison. Also, the hammer tip is 2 inches in diameter with a slight convex curvature and was swung as one would swing a sledge hammer, producing some uncertainty of the exact impact point.
- The experimental force input to the dryers was not necessarily normal to the surface. It was normal to the surface being impacted within the tolerances of human judgement of this angle, believed to be approximately 10° in any direction.
- The force input on Dryer #1 was provided using an impact hammer with a soft tip while the force input on Dryer #2 was provided by an impact hammer with a medium tip. Reference 3, the Dryer #2 report, contains some comparison data. The force roll-off versus frequency is greater for the soft tip than the medium tip. The intersection of the 2 curves (where the force is equal) is generally in the 130 Hz to 170 Hz range.
- The Dryer #1 measurements used 5, 7 or 10 averages while the Dryer #2 measurements used 5 averages
- Dryer #1 testing was interrupted to make dimensional measurements. The dryer was actually removed from its test supports and re-installed later. Three of the test supports were detached from the floor so the dryer could be removed and re-installed. There were no changes to the physical setup during the Dryer #2 test. It is believed that, for the purposes of evaluating the hood components in the frequency range of interest of 150 Hz to 180 Hz, this removal and re-installation has little effect.
- Dryer #2 testing contained additional measurement locations compared to Dryer #1; however, for the purposes of this report, the measurement locations on Dryer #2 that were

not on Dryer #1 were not considered. Also, the FE results only consider the measurement locations on Dryer #1 as well. There is no effect from this difference because only the same set of FRF locations were used for Dryer #1, Dryer # 2 and the FE results.

- Dryer #2 testing had consistent window parameters on the input force and the output accelerations, while there was some variation among sets or groups for the window parameters for Dryer #1 testing. The variation of window parameters would have the effect of increasing or decreasing the sharpness of peaks (adding or subtracting damping) for Dryer #1 FRFs compared to Dryer #2.
- An analysis of the uncertainties or tolerances on the instrumentation/data acquisition system sensitivities and their combinations in the FRF calculation show an overall uncertainty of +/- 7.8% on the FRF amplitude for the test measurements. This uncertainty is for repeating the same measurement on the same structure with 2 different sets of equipment. In other words, if Dryer #2 was structurally identical to Dryer #1, the FRF amplitude difference could be +/- 7.8%.

6.0 Test Results

This section presents a test results, a comparison of Dryer #1 versus Dryer #2. Any differences in the plots presented in this report compared to those in the original Dryer #1 and Dryer #2 reports arise from the discovery that earlier Dryer #2 summation FRF plots had additional FRFs compared to those in the Dryer #1 summation FRF plots. Section 7.3.4 includes a table listing the specific FRFs used to present the Dryer #1 and Dryer #2 test results and the FE results.

6.1 90° Hood Component Comparison

The 90° hood test results from Dryer #1 and Dryer #2 were compared. Figure 5 is a comparison of the overall summation FRFs for this component – a comparison of Test Dryer #1 and Test Dryer #2, while Figures 6, 7 and 8 are comparisons for Dryer #1 and Dryer #2 in the individual directions. The test results for Dryer #1 and Dryer #2 exhibit the same general trends in amplitude and slope of the FRF, particularly above 100 Hz in the frequency range of interest for this report. At lower frequencies, the peaks indicating resonances line up well, within +/- 10%, while the amplitude of these peaks shows some difference.

[[

]]

Figure 5: Summation FRF for 90° Hood, all 3 directions

[[

]]

Figure 6: Summation FRF for 90° Hood, Global X direction (Perpendicular to 90° Skirt Panel Surface)

[[

]]

Figure 7: Summation FRF for 90° Hood, Global Y direction (Horizontal Parallel to90° Skirt Panel Surface)

[[

]]

Figure 8: Summation FRF for 90° Hood, Global Z direction (Parallel to vertical dryer axis)

6.2 270° Hood Component Test Comparison

The 270° hood test results from Dryer #1 and Dryer #2 were compared to each other. Figure 9 compares Dryer #1 and Dryer #2 test overall summation FRFs. Figures 21 through 23 are comparisons of the test FRFs for the 270° hood in each of the 3 directions. As with the 90° hood, the test results for Dryer #1 and Dryer #2 exhibit the same general trends, particularly above 100 Hz while at lower frequencies, the amplitudes of some of the peaks indicating resonances show some difference. Above 100 Hz, the Dryer #2 FRFs tend to be slightly higher than the Dryer #1 FRFs, a difference in amplitude generally within the range of variation of the factors discussed in Section 5.4. Also, a significant peak near [[183[3]]] Hz appears in the Dryer #1 results but is not apparent in the Dryer #2 results.

[[

]]

Figure 9: Summation FRF for 270° Hood, all 3 directions

[[

]]

Figure 10: Summation FRF for 270° Hood, Global X direction (Perpendicular to 270° Skirt Panel Surface)

[[

]]

Figure 11: Summation FRF for 270° Hood, Global Y direction (Horizontal Parallel to 270° Skirt Panel Surface)

[[

]]

Figure 12: Summation FRF for 270° Hood, Global Z direction (Parallel to vertical dryer axis)

7.0 Correlation

This section discusses the process of using finite element model results to correlate with experimental test results. The focus of this document is on the outer hoods in the 100 Hz to 200 Hz frequency range, particularly in the 150 to 180 Hz region.

7.1 Procedure

The goal of the correlation is to determine the differences between the FE model and the test object, in this case with the focus on the outer hoods, comparing the measured FRFs.

The procedure to calculate the FRFs based on the FE model (ANSYS 8.1) will be outlined in the following paragraph. The actual correlation between test and FE was performed in LMS/LINK and Test.Lab.

7.2 Geometric Correlation

This is the first step in any correlation task. It will ensure the compatibility between the measured and the calculated data. It includes the following steps:

1. Definition of rational entities/groups in the model, grouping nodes that have common properties or are part of the same panel for example. Those entities are called components.
2. Definition of pairs between TEST measuring points and FE nodes. These pairs are stored in a node pair table (NPT). This table allows the automatic projection of the TEST geometry on the FE geometry.
3. Compatibility between the global and local coordinate systems. This information is also contained in the node pair table and ensures a proper projection of the TEST geometry on the FE geometry.
4. Transformation of the TEST data (modes, FRFs, wireframes) to the verification system (FE model), in order to make the comparison easier. This includes a coordinate system transformation wherever measurement and FE coordinate system do not agree.

All of these steps are performed in LMS/LINK.

7.3 FRF Correlation

Normal modes are an efficient representation of the dynamic behavior of a structure, but only useful for correlation as long as the structure does not have too many local modes. As mentioned above, this structure has a lot of local modes, even at low frequency. Specifically, there are over 10,000 modes between 0 Hz and 500 Hz. Several of the local modes can behave in a similar manner globally, with only minor difference in the local behavior on a specific component. These local modes exist both on the FE and test side, as a consequence all of these modes will correlate based on the global behaviour, although the local behaviour will be different. This makes it very difficult to correlate such a complex model based on modeshapes, except for a couple of well defined global modes.

The dynamic behavior of these complex models is therefore correlated based on an FRF basis. These FRFs can be evaluated over the whole frequency range of interest. In an FRF, the (acceleration) response of one point is plotted as function of a unit (force) input in another point. Modes can be found as peaks in an FRF, and the higher the modal damping, the lower and broader the peak will be. Actually the modes on the test side are estimated based on the measured FRFs. On the FE side these FRFs can be synthesized using different methods, which will be discussed further.

For checking correlation, the synthesized FE FRFs are compared with the corresponding measured test FRFs. More interesting than the exact amplitude is the general shape/trend of a FRF. A good correlation means that important peaks from the test should be found in the synthesized FRFs at a similar frequency, and the general trend of the FE and test FRFs are similar.

On the FE side the FRF can either be directly calculated in ANSYS or synthesized afterwards in LMS/Link based on modeshapes extracted from ANSYS. Both methods are outlined in the following.

7.3.1 FRF Synthesis using ANSYS

A FRF can be calculated in ANSYS with the harmonic response analysis (ANTYPE, HARMIC). The idea is to impose a unitary force at the hitting point in the direction corresponding to the measurement excitation direction and calculate the frequency response in all the DOFs of all the

other points. The obtained response functions can then effectively be seen as displacements or accelerations per unit input force.

Three methods of solution are available in ANSYS to calculate FRFs with the harmonic response analysis:

1. Full (HROPT, FULL)
   This method solves the general equation of motion of a structural system transposed in frequency domain directly.

2. Reduced (HROPT, REDUC)
   The reduced solution method uses reduced structure matrices to solve the equation of motion. This method runs faster than the full harmonic response by several orders of magnitudes, because the technique of matrix reduction is used so that the matrix used to represent the system is reduced to the selected DOFs required to characterize the response of the system. However the response can depend on the level of reduction.

3. Mode superposition (HROPT, MSUP)
   The mode superposition method uses the natural frequencies and mode shapes from a previous modal analysis (ANTYPE, MODAL) to compute the dynamic response to steady harmonic excitation. It converts the equation of motion in its modal form. The advantage of this method is that the computationally expensive matrix algebra can be calculated inexpensively in modal coordinates. The individual modal responses are then superimposed to obtain the actual response.

The Full method is very memory and time-consuming. Moreover it has to be recalculated completely for every excitation point and when one wants to study the effect of damping a new calculation is required for each damping value. Therefore the full method was not used to calculate the complete response of the system. It was only used to calculate a limited set of FRFs to check the modal superposition procedure outlined in 7.3.2. The reduced method can depend on the degree of reduction and was not used for that reason. The Mode Superposition technique is preferred here. This method has as an advantage that the mode shapes only have to be calculated once and can be re-used to calculate FRFs for different input points and different damping values. However for this structure and the frequency range of interest (200Hz) a lot of

modes would have to be taken into account. Not only the modes up to the upper limit of the frequency range of interest are needed, but also some of the higher modes above the frequency range of interest in order to account for modal truncation. Typically the modes are calculated in a frequency range 2.5 times the frequency range of interest (500Hz in this case). The modal extraction of these modes would be very time expensive, if calculated in one pass during the modal superposition calculation in ANSYS. Therefore a slightly different approach was adopted.

7.3.2 FRF synthesis using LMS/Link

The approach is in essence the same as the modal superposition in ANSYS, but to speed up the process the modes are extracted in different batches for the frequency range of interest. As mentioned the modes are calculated up to 500 Hz, to avoid modal truncation (the influence of modes before and beyond the frequency range considered). This frequency range is more than twice the required frequency range, which should be sufficient to avoid the modal truncation errors. In this frequency range the modes are extracted in batches of 400 modes at a time. The advantage is that these calculations can be performed on several separate machines at the same time using ANSYS. These modes will then be used for the actual FRF synthesis inside LMS/Link.

Due to the large complexity and magnitude of the construction, a tremendous number of modes exist between 0 Hz and 500 Hz. A total of 27 batches with 400 modes each were calculated in ANSYS on several machines, meaning that more than 10000 modes will be considered in the actual FRF synthesis. The frequency resolution of the FRF synthesis is 1 Hz. This FRF synthesis will make comparison with the test FRFs possible.

This process is done in LmsLink and visualized in the first step of Figure 13. For every batch of modes (Step 1) the FRFs will be synthesized separately in the frequency range from 0 to 500Hz, taking only into account the modes in that batch (Step2). The FRF synthesis for each batch is performed from every input point (in this case two input points on the hoods) to output points on the total construction and for each damping value under consideration.
The final FRF is obtained by adding the contributions of the different batches over the whole frequency range (up to 500Hz), but at the end of the calculation, only the FRFs up to 200 Hz are stored and used further in the processing (Step 3). During the FRF synthesis a coordinate transformation is done in LmsLink, to obtain agreement between the test and FE-results. This is

executed by using a node pair table in combination with the correct Euler angles for the node coordinate transformation. The final results will be in the local coordinate system of the test results. These results can then be summed by component and/or direction for comparison with test (Steps 4 and 5).

Some of these steps are discussed in more detail below.

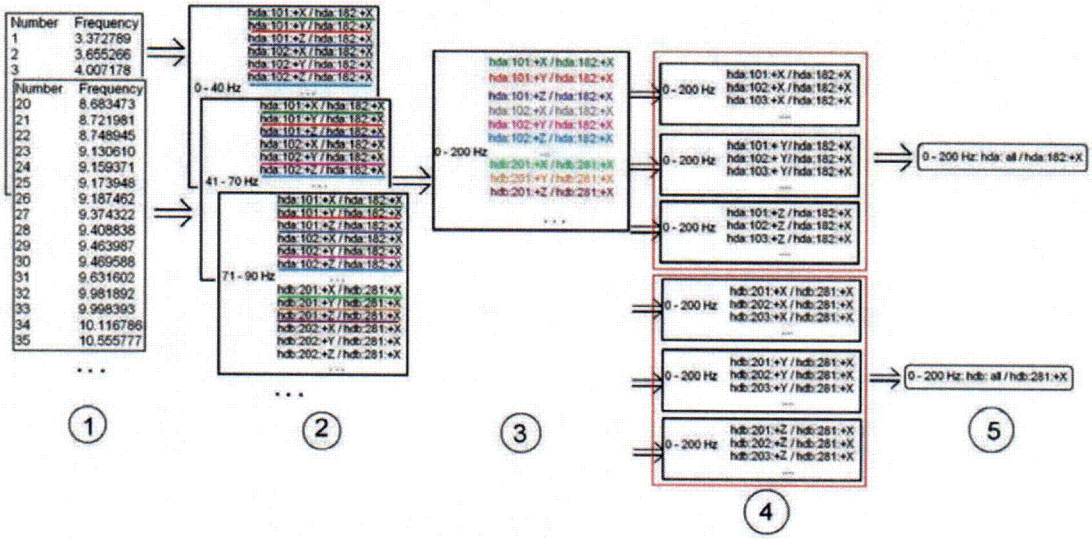

Figure 13: Overview of Synthesis Process

Step 3

As mentioned above the FRFs are calculated for each of the batches of modes and afterwards their contribution is added over the whole frequency range. By adding all the FRFs with the same input/output point combination, and correct direction of the acceleration (X, Y or Z), one obtains a FRF for that respective input/output point (third step of Figure 13) over the total frequency range. An example is given in Figure 14. The dashed lines are the partial FRFs. They all start at 0 Hz and run up to 500 Hz, to account for modal truncation. Only a few of the 27 batches are plotted and only up to 200Hz. The black full line is then the result of adding all the small parts. The FRF obtained with this summation can easily be compared with a measured FRF on the real construction, considering the same input and output points.

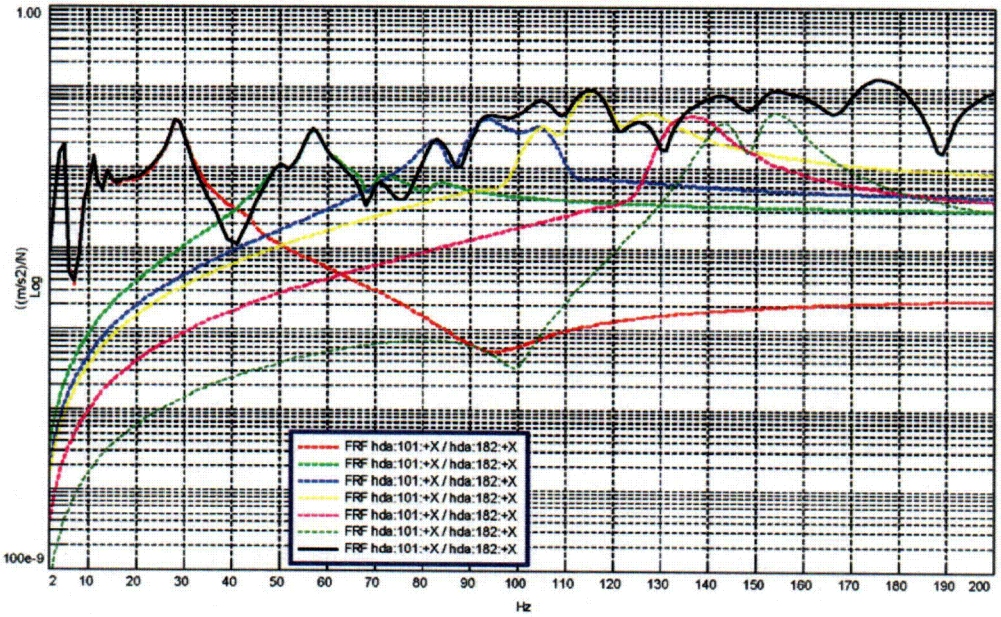

Figure 14: Addition of first 6 partial FRFs for input point "hda:182" and output point "hda:101", in X-direction.

Steps 4 and 5

A more general overview of a component of the dryer can be obtained by adding all the FRFs dealing with the part of interest, in one specific coordinate direction, and averaging the values. This is Step 4 of the process in Figure 13.

A final processing step is the summation of all directions for a specific component of the construction, and averaging the values. See the final step of Figure 13.

When averaging is discussed here, it means that the amplitude portions of the FRFs are summed, and the sum is divided by the number of FRFs used to obtain a linear average.

All the calculations of Steps 3, 4 and 5 of Figure 13 can be performed for the measured FRFs as well as for the synthesized FRFs. The transition from Step 1 to Step 2 is only needed for the synthesis of the FRFs calculated with mode superposition. For this action, LmsLink is used.

7.3.3 Validation of results

The full method in Ansys for calculation of the FRFs is only used as an extra check for some limited input/output points. A limited set is chosen due to the high memory usage and the large amount of time required. The results from these calculations are in the units of

displacement/force. They have to be differentiated twice to obtain acceleration/force. These values can then be compared with those for the mode superposition calculations discussed in Section 7.3.2 and the measurements. A comparison of the results of both methods (FULL and Mode superposition) is given in Figure 15.

[[

]]

Figure 15: comparison of FULL and Mode Superposition calculation method in Ansys (3% damping case)

7.3.4 Individual FRFs included in Summations

To obtain a comparison between the synthesized FRFs and the measured FRFs, and between the measured FRFs for Dryer #1 and Dryer #2, not all FRFs are considered in the summation (Steps 3 and 4 of Figure 13). Some output points were only measured on one of both dryers, and some measurements were not of acceptable quality. In the comparisons, these FRFs (FRFs not measured on both dryers or not of acceptable quality) are left out in both test and synthesis results. An overview of the FRFs that are taken into account is given in the table below, respectively for the 90° hood (hda) and the 270° hood (hdb). Figures 1 through 4 show the wireframe geometry with node locations for the hoods.

[[

Table 1: Degrees of Freedom used for Dryer #1, Dryer #2 and Summation FRFs

]]

7.4 Changes to As-received model

Several changes were made to the model after it was received from GE to more closely replicate the test conditions.

- Elastic modulus and damping changed to ambient conditions from reactor conditions (the lower skirt super element with its loading by water was left unchanged – this condition represented the same condition as Low Water Level for the test)
- Removal of pressure loading (a pressure loading from reactor conditions)
- Addition of grounded springs instead of perfectly rigid constraints at the support locations (the dryer as tested was supported on stands that exhibited flexibility as compared to the completely rigid FE constraints. A complete iteration of these springs to match the test results was not performed.)

8.0 Correlation of Test Results and FE Results

This section presents comparisons between test results and finite element analysis results for the 90° Hood Component and the 270° Hood Component. The comparisons are presented as comparisons of test FRFs to FE FRFs. In reviewing the comparisons, one item to note is that the frequency resolution of the test FRFs is 0.125 Hz while that of the FE FRFs is 1 Hz. This difference in frequency resolution causes no amplitude difference in the FRFs, but the test FRFs appear "grassier" than the FE FRFs which have a "clean" or "smooth" appearance. For the FE results, damping was varied as a function of frequency, [[ ]]. This variation was based on the experimentally derived damping values from the Dryer #2 report, Reference 3, and repeated below as Tables 2a and 2b. Some argument could be made based on these tables to use a lower damping value than 1% for the 270° Hood; however, it was decided to use the same damping distribution by frequency for both hoods. FE results using [[ ]]over the frequency range of 0 Hz to 200 Hz are also shown.

Table 2a: Dryer #2 Hood Damping Results at Low Water Level

[[

]]

Table 2b: Dryer #2 Hood Damping Results at Low Water Level

[[

]]

8.1 90° Hood Component Comparison

The 90° hood test results from Dryer #1 and Dryer #2 were compared to finite element predictions. Figure 16 is the overall summation FRF for this component – a comparison of FE, Test Dryer #1 and Test Dryer #2, while Figures 17, 18 and 19 are comparisons of the same objects for the individual directions. Figures 20 through 23 are comparisons of the test FRFs with FE FRFs that use [[1% and 3% [3]]]damping through the whole frequency range The overall trends (general amplitude and slope) of the test results compare very favorably with the FE predictions; however, [[in the frequency ranges of 90 Hz to 110 Hz, near 155 Hz and of 170 Hz to 185 Hz, the FE FRF is generally higher than the corresponding test FRFs, and, at approximately 165 Hz, the FE FRF is slightly lower in amplitude than the test FRFs. [3]]]In other frequency regions, the FE FRF generally runs through the average of the test scatter between the 2 dryers or along the upper amplitude or lower amplitude edge of the test scatter. In

reviewing the different directions, the differences are not limited to only one direction. It appears in all 3 directions; however, in the Z direction, the FE FRF tends to be slightly higher than the test FRFs.

[[

]]

Figure 16: Summation FRF for 90° Hood, all 3 directions

[[

]]

Figure 17: Summation FRF for 90° Hood, Global X direction (Perpendicular to 90° Skirt Panel Surface)

[[

]]

Figure 18: Summation FRF for 90° Hood, Global Y direction (Horizontal Parallel to 90° Skirt Panel Surface)
[[

]]

Figure 19: Summation FRF for 90° Hood, Global Z direction (Parallel to vertical dryer axis)

[[

]]

Figure 20: Summation FRF for 90° Hood, all 3 directions

[[

]]

Figure 21: Summation FRF for 90° Hood, Global X direction (Perpendicular to 90° Skirt Panel Surface)

[[

]]

Figure 22: Summation FRF for 90° Hood, Global Y direction (Horizontal Parallel to 90° Skirt Panel Surface)

[[

]]

Figure 23: Summation FRF for 90° Hood, Global Z direction (Parallel to vertical dryer axis)

8.2 270° Hood Component Comparison

The 270° hood test results from Dryer #1 and Dryer #2 were compared to finite element results. Figure 24 compares Dryer #1 and Dryer #2 test overall summation FRFs with an FE overall summation FRF. Figures 25 through 27 are comparisons of the test FRFs for the 270° hood in each of the 3 directions to the corresponding FE FRFs. Figures 28 through 31 are comparisons of the test FRFs with FE FRFs that use [[ ]]damping through the whole frequency range. The FE FRF trends versus frequency are very similar to those of the test FRFs, with the FE FRF being slightly higher in amplitude than the test FRF from [[ ]]Hz. The FE FRF is slightly lower than the test FRFs near [[ ]]Hz. In the Z direction, the [[ ]]Hz difference can be seen as extending down to [[ ]] Hz. The amplitude differences appear in all 3 directions; however, in the Z direction, the FE FRF tends to be slightly higher than the test FRFs relative to the other 2 directions.

[[

]]

Figure 24: Summation FRF for 270° Hood, all 3 directions

[[

]]

Figure 25: Summation FRF for 270° Hood, Global X direction (Perpendicular to 270° Skirt Panel Surface)

[[

]]

Figure 26: Summation FRF for 270° Hood, Global Y direction (Horizontal Parallel to 270° Skirt Panel Surface)

[[

]]

Figure 27: Summation FRF for 270° Hood, Global Z direction (Parallel to vertical dryer axis

[[

]]

Figure 28: Summation FRF for 270° Hood, all 3 directions

[[

]]

Figure 29: Summation FRF for 270° Hood, Global X direction (Perpendicular to 270° Skirt Panel Surface)

[[

]]

Figure 30: Summation FRF for 270° Hood, Global Y direction (Horizontal Parallel to 270° Skirt Panel Surface)

[[

]]

Figure 31: Summation FRF for 270° Hood, Global Z direction (Parallel to vertical dryer axis)

9.0 Summary and Conclusions

An experimental modal analysis was performed on new design Dryer #1 and Dryer #2, the dryers intended for QC2 and QC1, respectively, and the results were compared to finite element analysis results on a FRF basis to focus on a higher frequency range than was covered in the original Dryer #1 and Dryer #2 reports. The FEA involved using the modes from a modal analysis in a mode superposition to obtain FRFs that match the input and response points of the test data.

The correlation between the 90° hood and the 270° hood for the Dryer #1 test and the Dryer #2 test is considered to be good to very good. The amplitude of the FRFs, the frequency peaks that indicate resonances and the trends of the FRFs are very similar. The correlation between the test and FE results for the hoods is considered to be good for a structure of this complexity in the frequency range of interest from 100 to 200 Hz. Both the 90° hood and the 270° hood show the FE prediction being very similar to the test results in both amplitude and trend of the curve. For the 90° hood, the FE results slightly [[

]] Also, for both hoods, the Z direction FE FRF tends to run slightly higher in amplitude relative to the test FRFs than the other directions.

In summary:

1. The dryers are structurally similar. Section 6.0 contains some small differences in FRF responses.
2. The FE adequately represents the actual dryer. The FRF frequency content and amplitudes are very similar in the frequency range of interest. Section 8.0 describes some small differences.

10.0 References

1. Ramani, Venkat "Steam Dryer Hammer Test Specification." GE 26A6380, Revision 1. GENE. San Jose, CA. April 2005.
2. De Brabandere, Tom, et al. "Test and Analysis Report Quad Cities New Design Steam Dryer #1 Experimental Modal Analysis and Correlation with Finite Element Results, Revision 1." LMS, Troy, MI. May 2005
3. De Brabandere, Tom, et al. "Test and Analysis Report Quad Cities New Design Steam Dryer #2 Experimental Modal Analysis and Correlation with Finite Element Results, Revision 2." LMS, Troy, MI. June 2005

Quad Cities New Design Steam Dryer
Dryer #1, Dryer #2 and Finite Element Model Outer Hood
Frequency Response Functions
Extension to 200 Hz

Attachment A
270° Outer Hood Narrow Frequency Range

November 17, 2005

Table of Contents

List of Figures 49
Acronyms 50
A- 1.0 Background 51
A- 2.0 Test and Finite Element Results 52
A- 2.1 270° Hood Component Comparison 52
A- 3.0 Discussion and Conclusions 55
A-4.0 References 56

List of Figures

Figure A-1: Summation FRF for 270° Hood, all 3 directions 53
Figure A-2: Summation FRF for 270° Hood, X direction (Perpendicular to 270° Hood Panel Surface) 53
Figure A-3: Summation FRF for 270° Hood, Global Y direction (Horizontal Parallel to 270° Hood Panel Surface) 54
Figure A-4: Summation FRF for 270° Hood, Global Z direction (Parallel to vertical dryer axis) 54

Acronyms

AISI	.....	American Iron and Steel Institute
FE	.....	Finite Element
FEA	.....	Finite Element Analysis
FRF	.....	Frequency Response Function
QC1	.....	Quad Cities Unit 1
QC2	.....	Quad Cities Unit 2

A- 1.0 Background

After the initial correlation between FE results and test results was performed, the steam dryers were installed in Quad Cities Unit 1 (QC1) and Quad Cities Unit 2 (QC2) in June and May, 2005. Dryer #1, the instrumented dryer, was installed in QC2. Data acquired during the power ascension and while operating at a steady-state condition for QC2 show excitation on the dryer of significant amplitude in the [[ ]]. Earlier correlation efforts focused on the frequency range below 100 Hz so it was requested that the frequency range of 100 Hz to 200 Hz, and specifically the region around [[ ]] at operating conditions. After review of the main body of the report, a more detailed examination in a narrow frequency range for the 270° outer hood was requested.

The frequency range of interest for operating conditions is [[ ]] and is based on the pressures seen by the dryer and the response of the dryer during operation. At the ambient conditions of the experimental modal analysis, the natural frequencies of the dryer shift to a higher range due to an increase in modulus of elasticity from plant conditions to ambient conditions. The modulus of elasticity used for ambient conditions is 28e6 pounds per square inch (psi) while that used for the operating conditions is 25.5e6 psi. The value of 25.5e6 psi was in the model as received, while the value of 28e6 psi is the modulus of elasticity in tension for AISI 316/316L at ambient conditions. For density, 0.288 pounds per cubic inch (lb/in^3) was the value used for operating conditions while 0.29 lb/in^3 was used for ambient conditions. The net effect of these two changes is a 5.1% increase in frequency from the FE model at operating conditions to the FE model at ambient conditions. The density difference accounts for only 0.34% of the change. The frequency range of interest for operating conditions of [[ ]] at ambient conditions for the experimental modal analysis. All of the results presented are for ambient conditions. The measurements were performed at ambient conditions, and the FE analysis used material properties for ambient conditions. The main body of the report had discussed a wider frequency range of interest based on the potential variation of frequency between the FE model results and the test results.

A- 2.0 Test and Finite Element Results

This section presents a comparison of results from Dryer #1, Dryer #2, and the FE model for the 270° outer hood in the frequency range of interest. Section 7.3.4 of the main body of the report includes a table listing the specific frequency response functions (FRFs) used to present the Dryer #1 and Dryer #2 test results and the FE results.

A- 2.1 270° Hood Component Comparison

The 270° hood test results from Dryer #1 and Dryer #2 were compared to each other and to the FE results. Figure A-1 compares Dryer #1 and Dryer #2 test overall summation FRFs. Figures A-2 through A-4 are comparisons of the test FRFs for the 270° hood in each of the 3 directions. The frequency range of interest at ambient conditions, [[ ]], is bounded on the plots by vertical orange lines. All of the plots show data from ambient conditions. For this frequency range, the FE results display a higher amplitude at the lower end of the frequency range of interest than both the Dryer #1 and Dryer #2 results. The direction perpendicular to the outer hood surface dominates the overall summation; however, all 3 directions show similar trends although the amplitude of Dryer #2 in the horizontal direction parallel to the hood surface is nearly the same as the FE result for the lower half of the frequency range of interest rather than the Dryer # 2 amplitude being less than the FE result. For the overall summation, the FE result is higher, by more than a factor of 2 for part of the range, than the Dryer #1 result for the lower half of the frequency range of interest. It is higher by 50% than Dryer #2 at the [[ ]]. The FE result is slightly lower than the test results for both dryers at the upper edge of the frequency range of interest. The frequency range of interest is small enough that the time step variations performed for the load input to the stress analysis covers the whole range.

[[

]]

Figure A-1: Summation FRF for 270° Hood, all 3 directions

[[

]]

Figure A-2: Summation FRF for 270° Hood, X direction (Perpendicular to 270° Hood Panel Surface)

[[

]]

Figure A-3: Summation FRF for 270° Hood, Global Y direction (Horizontal Parallel to 270° Hood Panel Surface)

[[

]]

Figure A-4: Summation FRF for 270° Hood, Global Z direction (Parallel to vertical dryer axis)

A- 3.0 Discussion and Conclusions

This section presents a discussion of the comparison of results from Dryer #1, Dryer #2, and the FE model in the ambient equivalent of the [[ ]]frequency range under operating conditions for the 270° outer hood.

- The test results from Dryer #1 and Dryer #2 and the FE results show that Dryer #1, Dryer #2 and the FE model are dynamically similar in the frequency range of interest and that the FE results overpredict the test results for both dryers for part of the frequency range of interest.
- The difference in amplitudes of the FRFs indicates that at the lower end of the frequency range of interest, particularly normal to the surface and in the vertical direction, the finite element model is more responsive than Dryer #2 which is more responsive than Dryer #1.
- The amplitude difference in the acceleration per force FRFs shown cannot be simply scaled to an amplitude difference in stress or strain. The amplitude difference in acceleration/force FRFs does not predict the amplitude difference in strain.
- The amplitude differences between Dryer #1 and Dryer # 2 are attributable to both structure-to-structure variation (it is known that the weld sequence varied between the 2 dryers) and test-to-test variation (items discussed in Section 5.3 of the main body of the report).
- The stress analysis uses the finite element model not the test results. The finite element model has higher FRF amplitudes than both Dryer #1 and Dryer #2 at the lower end of the frequency range of interest, specifically from [[ ]] at ambient conditions. The FE FRF amplitudes are higher than Dryer #1 up to [[ ]]. The details of the stress analysis are contained in Reference 1.
- The stress analysis discussed in Reference 1 varies the time step of the input loads by ±2.5%, ±5%, ±7.5%, and ±10%. This time step variation of the input load varies the frequency of the peak amplitude signal in the input load. The peak in the load signal is at 158 Hz at operating conditions for the nominal case, the case with no time step variation. The frequency in the FE FRF results where the amplitude of the FE results is higher than both dryers is [[ ]] at ambient conditions, or [[ ]] at operating conditions. The nominal+5% time step variation places the [[ ]],

so the load peak would coincide with the highest amplitude in the FE model FRF results (converting the ambient FE FRF results to the frequency scale at operating conditions). Therefore, the time step variation of the stress analysis passes the frequency of the highest component of the load signal through the frequency range where the FE model shows higher FRF amplitudes than either of the test dryers – matching the extremes of the load and of the structure in frequency.

A-4.0 References

4. "Quad Cities Units 1 and 2 Replacement Steam Dryer Analysis Stress, Dynamic, and Fatigue Supplementary Analyses for EPU Conditions", GE-NE-0000-0046-5358-01-P, Class III, October 2005.

Enclosure 9

GENE-0000-0046-8129-02, "Quad Cities New Design Steam Dryer - Methodology for Stress Scaling Factors Based on Extrapolation from 2885 MWt to 2957 MWt of Unit #2/Dryer #1 Data," Revision 2 (Proprietary and Non-Proprietary)