U.S. EPR Pre-Application Review Meeting: Safety Analysis Methodologies and Severe Accident Mitigation and Analytical Methods

Framatome ANP and the NRC
November 2, 2005

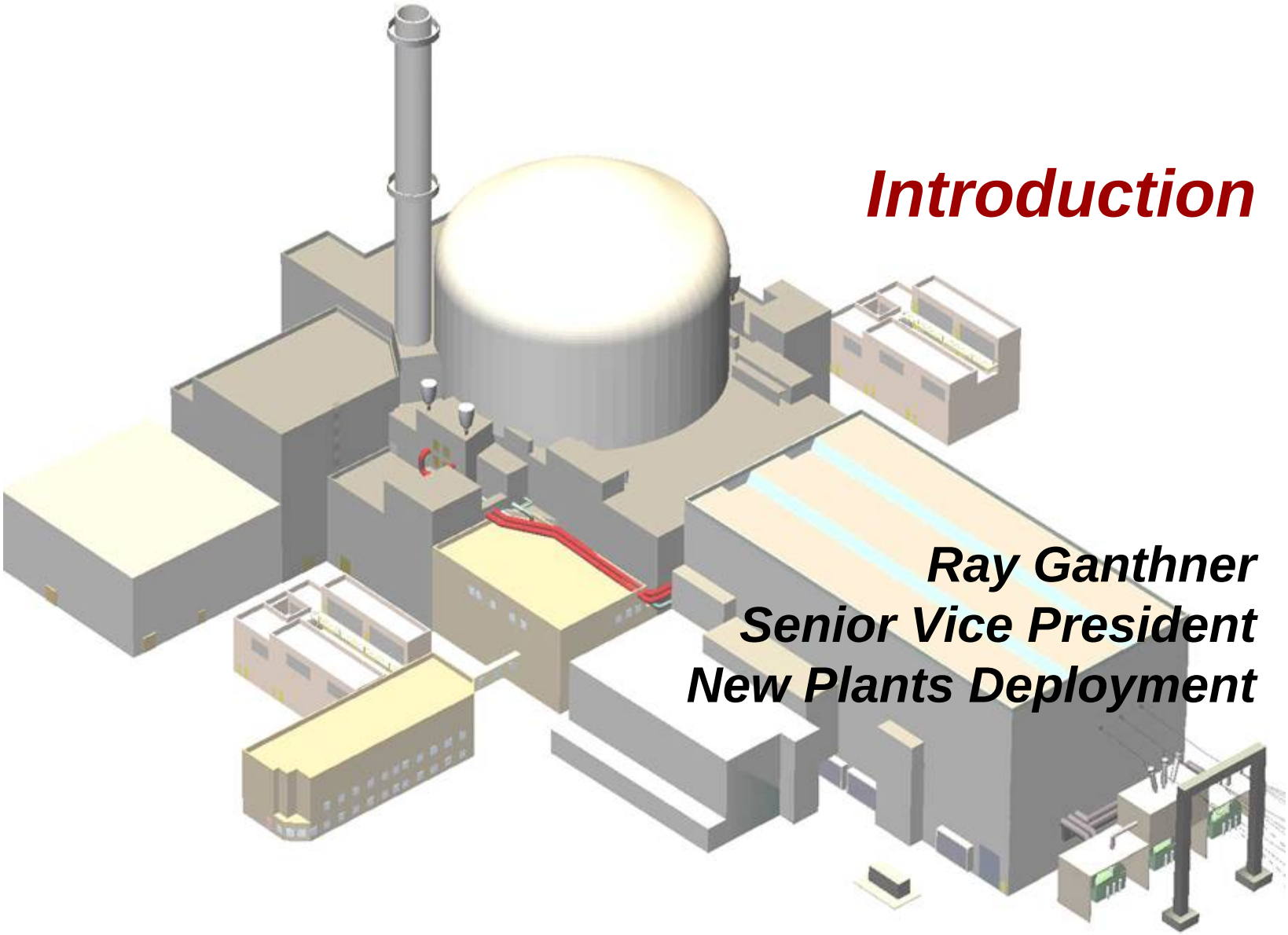

Introduction

Ray Ganthner
Senior Vice President
New Plants Deployment

Meeting Objectives

- Provide a global update on the EPR deployment
- Describe the suite of analytical methodologies to be used for U.S. EPR safety analyses and the topical report for 3Q of CY2006
- Describe the severe accident mitigation features of the U.S. EPR
- Discuss the planned severe accident evaluations and analytical methods for the U.S. EPR and the topical report to be submitted in 4Q CY2006

Outline

- Overview of Safety Analysis Methodologies for U.S. EPR Design Certification (Jerry Holm)
- Severe Accident Mitigation and Analytical Methodology (Eric Williams)
- Summary and Next Steps (Sandra Sloan)

Update on the Status of the EPR

- **U.S. design conversion process proceeding according to plan**
- **Continued U.S. utility support for U.S. EPR design certification**
- **Formation of UniStar Nuclear: Joint venture of Constellation Energy and AREVA, Inc. to design, license, build, and operate first 4 U.S. EPRs**
- **International EPR licensing activities continue (Finland, France, Canada, China)**

Olkiluoto 3: August 2005

Concrete pouring for the base slab of the Fuel Building

Olkiluoto 3: October 2005

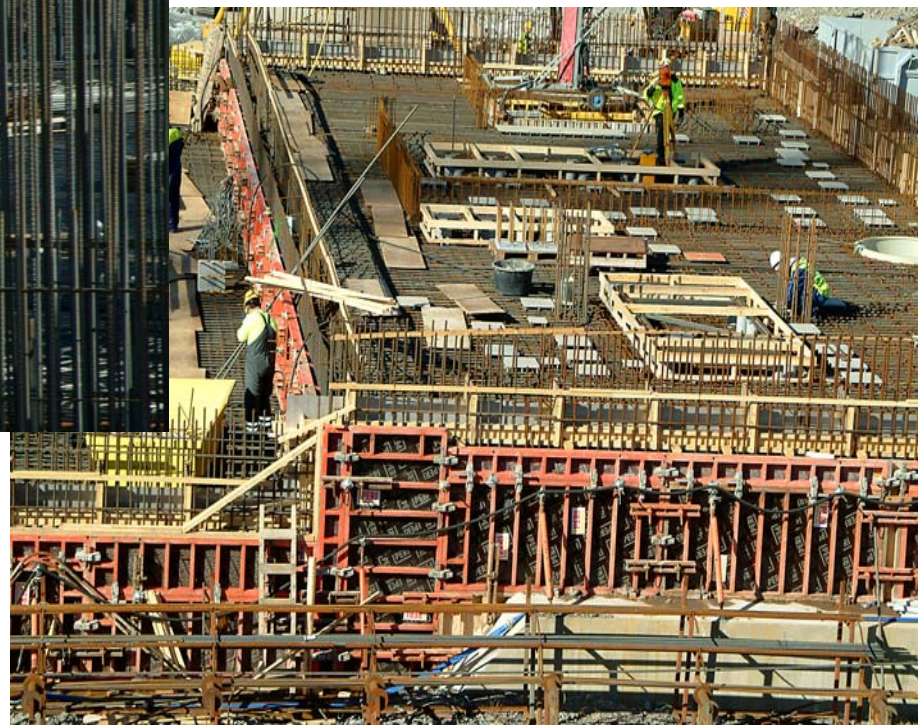

Concrete pouring for the base slab of the Reactor Building and Safeguard Buildings 1 & 4 (completed)

Olkiluoto 3: October 2005

Bottom section of containment liner assembled and placed on staging pad

Overview of Safety Analysis Methodologies for U.S. EPR Design Certification

Jerry S. Holm
FANP Licensing Manager

Objectives

- Familiarize the NRC with methodologies to be used for U.S. EPR fuel and safety analyses
- Describe the code applicability topical report—content and approach—to be submitted third quarter 2006
- Obtain NRC feedback on planned approach

Topics

- U.S. EPR Design Overview
- Methods Applicability Topical Report
- Fuel Analysis Methods
  - Neutronics
  - Thermal-Hydraulics
  - Mechanical
- Safety Analysis Methods
  - Large Break LOCA
  - Small Break LOCA
  - Non-LOCA Transients
- Conclusions

Primary System Features

- **Conventional 4-loop design proven by decades of design, licensing and operating experience**

- **Main components enlarged as compared with existing designs to increase grace period in many transients and accidents**

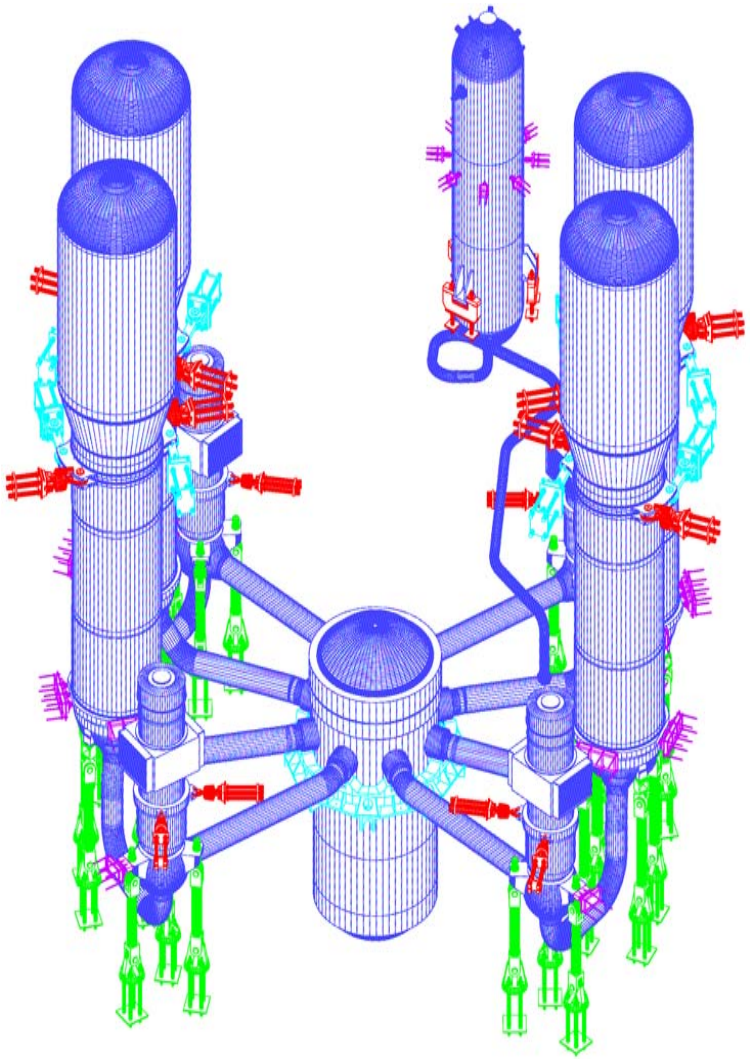

Fuel Design Proven By Operation

- 17x17
- Typical pitch-to-diameter ratio
- M5 cladding
- Heated length similar to STP
- M5 HTP mixing grids
- Anti-Debris lower end fitting
- Significant design margins

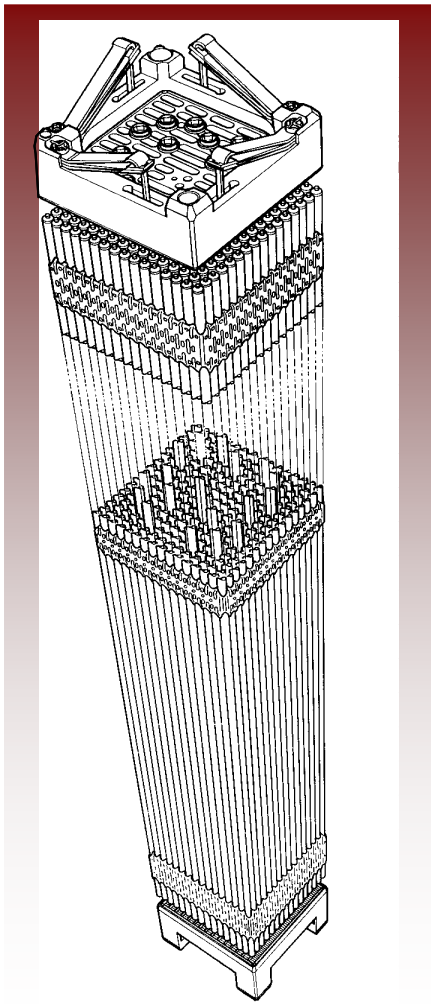

Primary Topical Reports

- **Neutronics**
  - **EMF-96-029PA, CASMO3 and PRISM**
- **Thermal-Hydraulics**
  - **BAW-10156PA, LYNXT**
- **Mechanical**
  - **BAW-10231PA Rev 0, COPERNIC**
- **Non-LOCA**
  - **EMF-2310PA Rev 1, S-RELAP5**
- **Large Break LOCA**
  - **EMF-2103PA, S-RELAP5 Realistic**
- **Small Break LOCA**
  - **EMF-2328PA, S-RELAP5 Appendix K**

Methods to be Addressed with Design Certification Application

- **Setpoints**
  - **U.S. EPR setpoints differ from current generation plants**
  - **EMF-92-018PA, Westinghouse plants**
  - **EMF-1961PA, CE plants**
- **Containment**
  - **BAW-10252PA, GOTHIC**
- **Control Rod Ejection**
  - **Use NEMO-K, LYNXT, S-RELAP5**
  - **BAW-10221PA**

Contents of Methods Applicability Topical Report

- U.S. EPR Design Overview
- Summary of Codes and Methods for U.S. EPR
- Fuel Related Methodologies for U.S. EPR Analyses – Neutronic, Thermal-Hydraulic, Mechanical
- S-RELAP5 Methodology for U.S. EPR Large Break LOCA Analysis
- S-RELAP5 Methodology for U.S. EPR Small Break LOCA Analysis
- S-RELAP5 Methodology for U.S. EPR Non-LOCA Transients
- APPENDICES – Sample Problems

Bases for Methods Applicability Evaluation

- **Comparison of physical characteristics of plants and fuel designs for which methods are currently approved and U.S. EPR**
- **Comparison of phenomena and conditions in currently approved plants and U.S. EPR**
- **Changes to methods will be documented and supported in the topical report**
  - **Minimal changes expected**
  - **None for most topical reports**

Neutronics

- EMF-96-029PA
- Cross section code - CASMO3
  - Applicable to 17x17 square fuel lattice
  - Applicable up to 5 w/o U-235
- Core physics code – PRISM
  - Applicable to Westinghouse 2-, 3-, and 4-loop and CE plants
  - Address U.S. EPR core configuration
  - Address U.S. EPR incore instrumentation

Thermal-Hydraulics

- BAW-10156PA
- LYNXT - core transient thermal-hydraulic program
  - Applicable to 17x17 square lattice
  - Applicable to Westinghouse 3- and 4-loop plants
  - Calculates DNBR in conjunction with CHF correlation
  - Full core modeling capability
- Applications
  - Core hydraulics – core pressure drop, hydraulic lift force, axial and lateral flow velocities, bypass flow
  - DNB evaluations – normal operation and accident conditions
  - Setpoint verifications
  - Control component cooling, guide tube boiling

Mechanical

- BAW-10231PA Revision 0
- COPERNIC fuel rod design computer code
  - Applicable to PWR fuel rods
  - Applicable up to 62 GWD/MTU
  - Current state of art models
- Applications
  - Rod internal pressure
  - Centerline fuel melt (kW/ft)
  - Transient strain
  - Fatigue
  - Clad corrosion

Large Break LOCA

> **EMF-2103PA**

- **S-RELAP5 Realistic Large Break LOCA**
- **RODEX3 for fuel conditions**
- **Developed following the Code Scaling, Applicability and Uncertainty (CSAU) process, NUREG/CR-5249**
- **Extensively benchmarked – integral and separate effects tests**
- **Approved for application to Westinghouse 3- and 4-loop and CE PWRs**

Small Break LOCA

> **EMF-2328PA**

- **S-RELAP5 Small Break LOCA**
- **Deterministic Appendix K model**
- **RODEX2 for fuel conditions**
- **Benchmarked to integral and separate effects tests**
- **Approved for application to Westinghouse 3- and 4-loop and CE PWRs**

Non-LOCA Transients

> **EMF-2310PA Revision 1**

- **S-RELAP5 non-LOCA deterministic model**
- **Complies with NUREG-0800**
- **Calculates system wide response to transients and accidents**
- **Provides system inputs to DNB, fuel centerline melt, and radiological**
- **Approved for application to Westinghouse 3- and 4-loop and CE PWRs**
- **Address use of COPERNIC for fuel conditions**

Bases for Methods Applicability

- **Comparison with physical characteristics of plants and fuel designs for which methods are currently approved**
- **Comparison with phenomena and conditions of currently approved plants**

EPR Fuel Assembly Comparison

	17x17 HTP	U.S. EPR HTP
Lower tie plate (LTP)	FUELGUARD™	Same
Fuel pin array	17 x 17	Same
Fuel pin pitch (in)	0.496	Same
Fuel rod OD (in)	0.376	0.374
Fuel rod ID (in)	0.328	0.329
Fuel pellet OD (in)	0.3215	0.3225
Fuel pellet TD (%)	95	96
Active fuel length (ft)	12	13.78
Fuel cladding	Zr-4	M5
Spacer grid in active fuel	HTP	Same
Fuel rods/assembly	264	265
Guide tubes/assembly	24	Same
Instrument tubes/assembly	1	0
Guide tube OD (in)	0.48	0.49

Reactor Coolant System: U.S. EPR vs. Current U.S. 4-Loop Plants

> **RCS configuration**

- **Four separate loops – similar arrangement**
- **Pressurizer - similar arrangement**
- **Recirculating steam generators – with axial economizer**
- **Centrifugal reactor coolant pumps**
- **Safety systems - similar type, locations**
  - **Emergency Feedwater**
  - **ECC Accumulators**
  - **ECC pumped injection (Medium and Low Head)**
- **Large dry containment with liner**

Reactor Coolant System: Parametrics

Parameter	EPR	Typical Current U.S. 4-Loop Design
Thermal power (MW)	4,500	3,411
Hot leg temp (°F)	624	617-620
Cold leg temp (°F)	564	558-560
RCS flow per loop (gpm)	125,000	98,000
Primary system pressure (psia)	2,250	2,250
Total RCS volume (ft3)	16,245	12,600
PZR volume (ft3)	2,650	1,800
SG inventory (lbm)	182,000	106,000
Number of fuel assemblies	241	193
Average linear heat rate (kW/ft)	5.01	5.58
Peak linear heat rate (kW/ft)	13.72	13.95
Primary volume/power (ft3/MW)	3.61	3.69
Secondary mass/power (lbm/MW/SG)	40.4	31.1
PZR steam-to-RCS liquid volume	0.070	0.061
LOCA break area/system volume (ft-1)	3.17 (E-04)	3.27 (E-04)
Accumulator volume/RCS volume	0.35	0.30

U.S. EPR vs. Current U.S. 4-Loop Designs

- Higher thermal power, lower average LHR
- Larger primary and secondary volumes
- Longer active core, comparable to STP
- RCS volume/power ratio essentially same
- Comparable cold leg mass flux (flows and flow areas increase with volume and power)

U.S. EPR vs. Current U.S. 4-Loop Designs (cont.)

- **Medium head SI with safety grade SG cooldown**
  - **Improves SBLOCA performance**
  - **Improves SG tube rupture performance**
- **Elevations**
  - **Top of active core ~6 ft below cold leg nozzle (vs ~4 ft on current plants)**
  - **Loop seal elevation at top of active core**
  - **Improves LBLOCA reflooding and SBLOCA loop seal clearing**
- **Volumes**
  - **Pressurizer and SG volumes increased on a relative basis – improves transient response**

Status of Code Applicability Review

- Reviewing methodologies vs. U.S. EPR for the Chapter 15 events
- Differences between U.S. EPR and current 4-loop plants are within variations allowed by methodologies
- Review to date indicates methodologies are applicable to U.S. EPR
  - No code modifications identified
  - Correlations/ranges of applicability remain valid
  - No new phenomena introduced by U.S. EPR design

Conclusions

- **U.S. EPR is similar to current U.S. 4-loop plants**
  - **Configuration is the same as those modeled in currently approved methods**
  - **Geometries and flow areas are consistent with volume and power**
  - **Elevation differences are favorable**
  - **Volume differences in components are favorable**
  - **Lower average LHR**

- **Event sequences and phenomena**
  - **Event sequences are the same as for current 4-loop designs**
  - **U.S. EPR introduces no new phenomena beyond those modeled in currently approved methods**

Severe Accident Mitigation And Analytical Methodology

Eric Williams
New Plants Deployment

Objectives

- Describe the role of severe accidents in the U.S. EPR safety basis
- Describe U.S. EPR severe accident design features
- Explain the R&D basis for relevant U.S. EPR design features
- Explain the proposed analytical approach
- Discuss future NRC submittals
- Solicit feedback from the NRC

U.S. EPR Severe Accident Mitigation

Regulatory Basis

- Severe accidents represent an area of residual risk
- SECY 93-087 (April 2, 1993) and associated SRM (July 21, 1993)
  - Core Debris Coolability
  - High-pressure Core Melt Ejection (HPME)
  - Fuel Coolant Interactions (FCI)
  - Hydrogen Control
  - Containment Performance
  - Equipment Survivability
- Revision of 10CFR50.44 (September 16, 2003)
  - Capability of ensuring a mixed atmosphere
  - Global concentration of hydrogen below 10% by volume
  - Maintain containment integrity in the event of a deflagration

U.S. EPR will be consistent with NRC guidance

U.S. EPR Safety Basis

- **Safety philosophy includes deterministic consideration of defense-in-depth complemented by probabilistic analyses**
  - **Prevent deviations from normal operation**
  - **Detect deviations and prevent escalation to DBA conditions**
  - **Control DBAs and prevent escalation into a severe accident**
  - **<u>Mitigate the consequences of a severe accident</u>**

- **Features included to limit radiological consequences**
  - **Design objective to minimize the need for countermeasures**

Robust U.S. EPR design basis for severe accidents

U.S. EPR Severe Accident Philosophy

- **The U.S. EPR is designed to account for a broad spectrum of severe accident phenomena**
  - **High Pressure RCS Failure**
  - **Fuel Coolant Interactions**
  - **Molten Core Concrete Interaction (MCCI)**
  - **Hydrogen Generation**
  - **Containment Pressurization**

- **Robust design of severe accident mitigative features demonstrated through bounding sequences**

Severe accident mitigation philosophy is focused on maintaining containment integrity

U.S. EPR Severe Accident Design Features

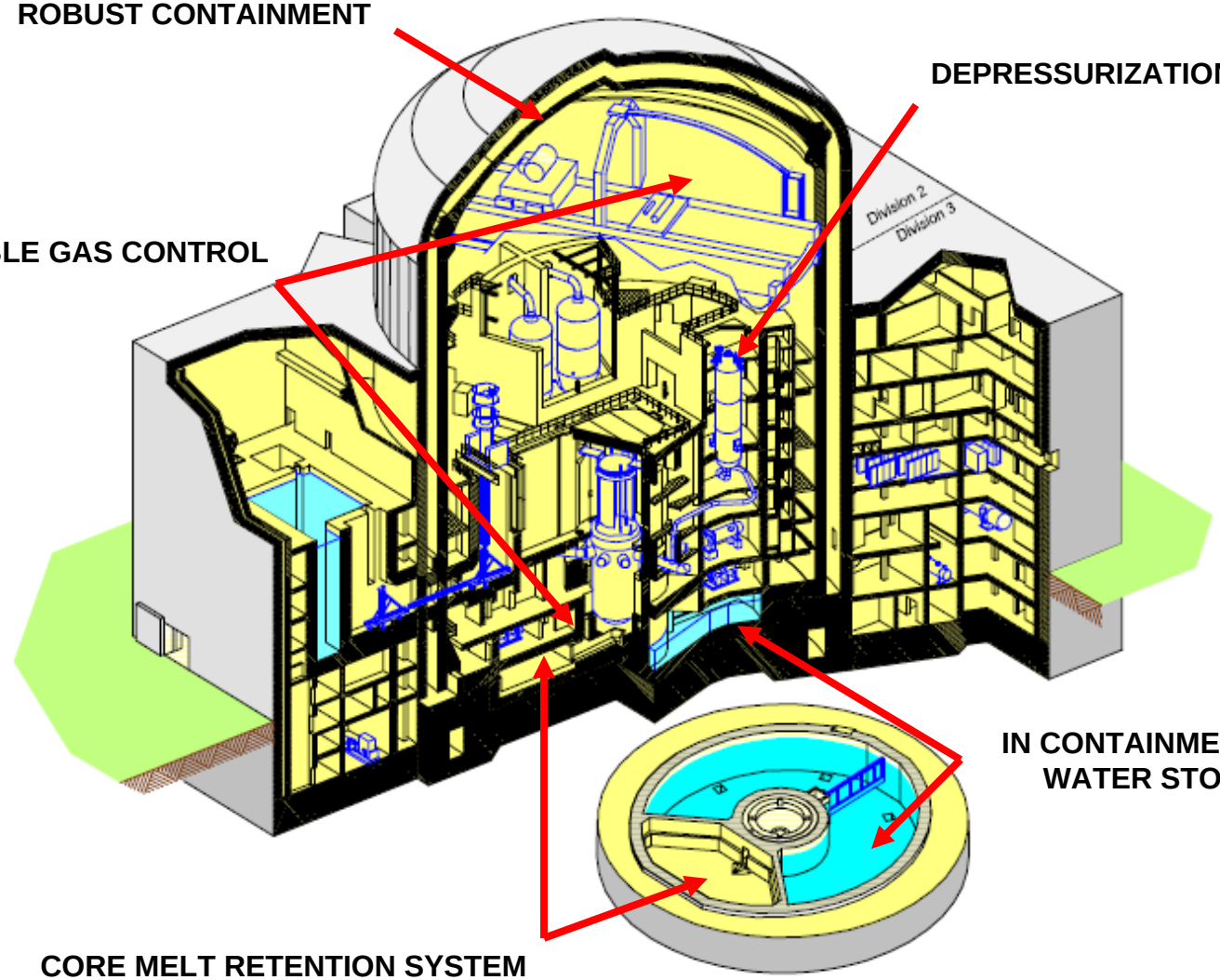

Severe Accident Depressurization Valves

- Dedicated valves address high pressure RCS failure concerns
- Valve sizing ensures rapid depressurization of RCS
- Reactor cavity design limits DCH in case of RPV failure at elevated pressure

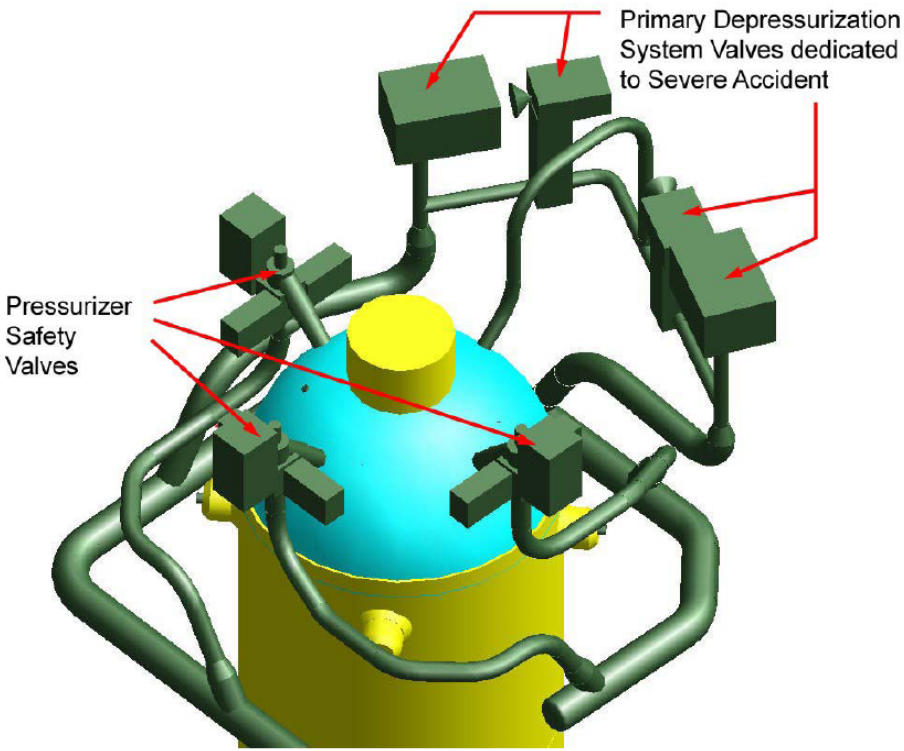

Core Melt Retention System (CMRS)

- CMRS designed to passively stabilize molten core debris
- CMRS features address staged melt progression
  - In-vessel melt progression
  - RPV failure
  - Melt retention and conditioning
  - Melt relocation and quenching
  - Long-term melt stabilization
- The CMRS protects the integrity of the containment basemat

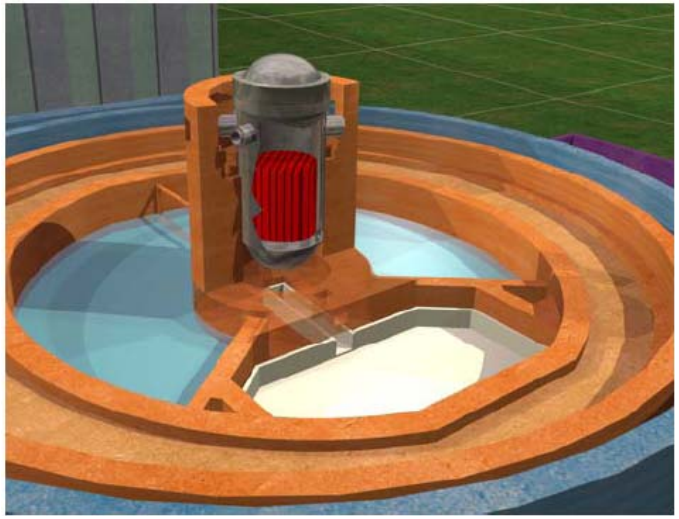

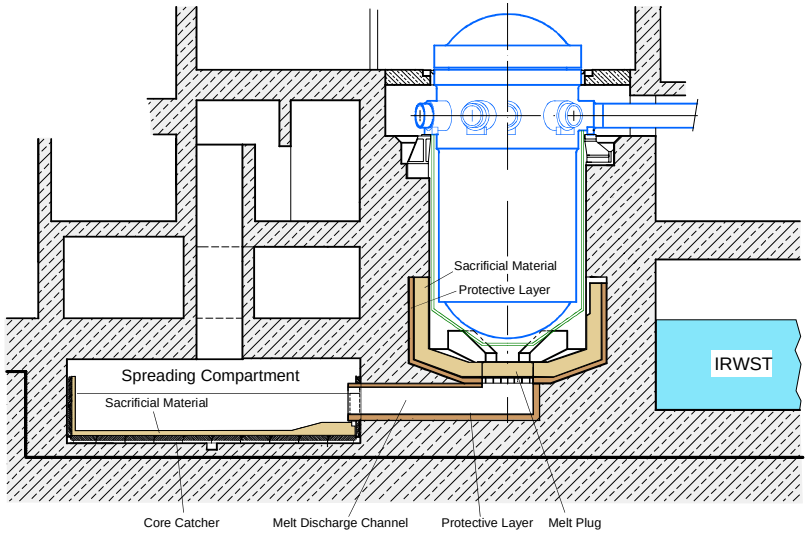

In-Vessel Melt Progression

- In-vessel melt progression is a function of the reactor internals
- Corium will accumulate in the lower RPV plenum as the melt progresses
- Accumulation in the lower head can lead to RPV failure and relocation into the cavity
- Accumulation in the cavity will accelerate a gross failure of the lower head and residual core

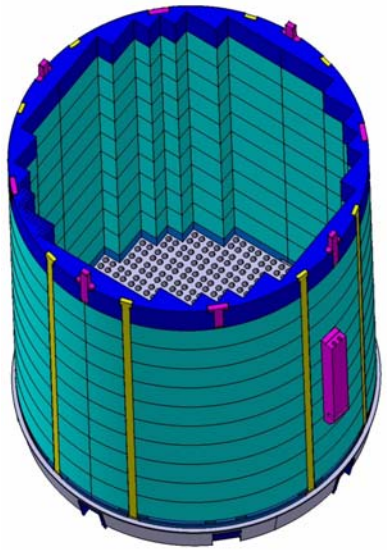

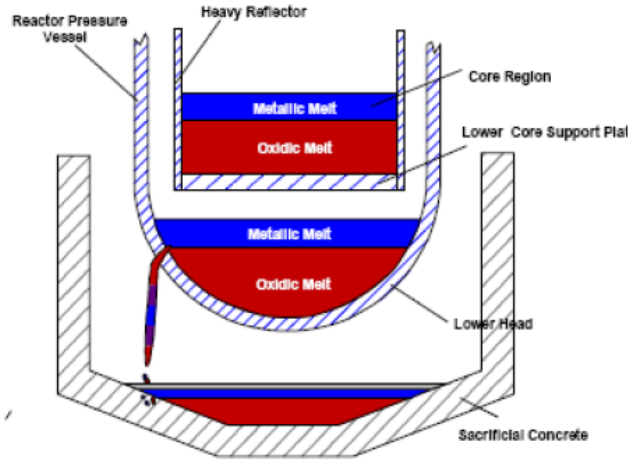

Melt Conditioning

- Reactor cavity is designed to temporarily retain the molten core debris prior to spreading and stabilization processes
- Melt accumulation and conditioning is an integral part of the melt stabilization strategy
  - Limits uncertainty associated with RPV release states
  - MCCI lowers melting temperature of corium and promotes its ability to spread

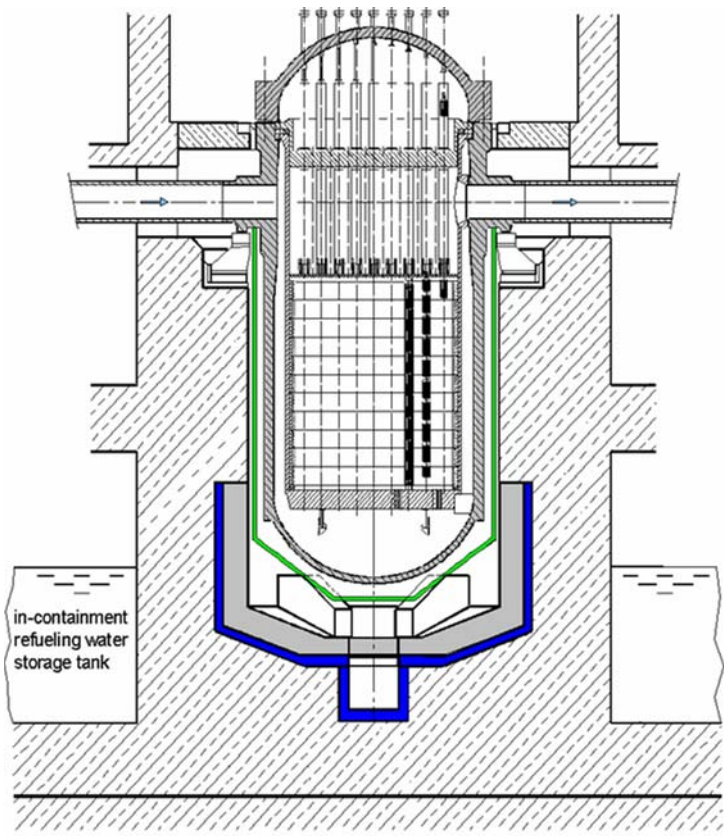

Melt Spreading

- After gate failure the melt will relocate into the spreading area
- Melt spreading phenomena have been extensively investigated
- The large mass and low viscosity of the conditioned melt promotes spreading
- Melt spreading aids in subsequent stabilization processes
- Spreading area is dry at the time of melt relocation

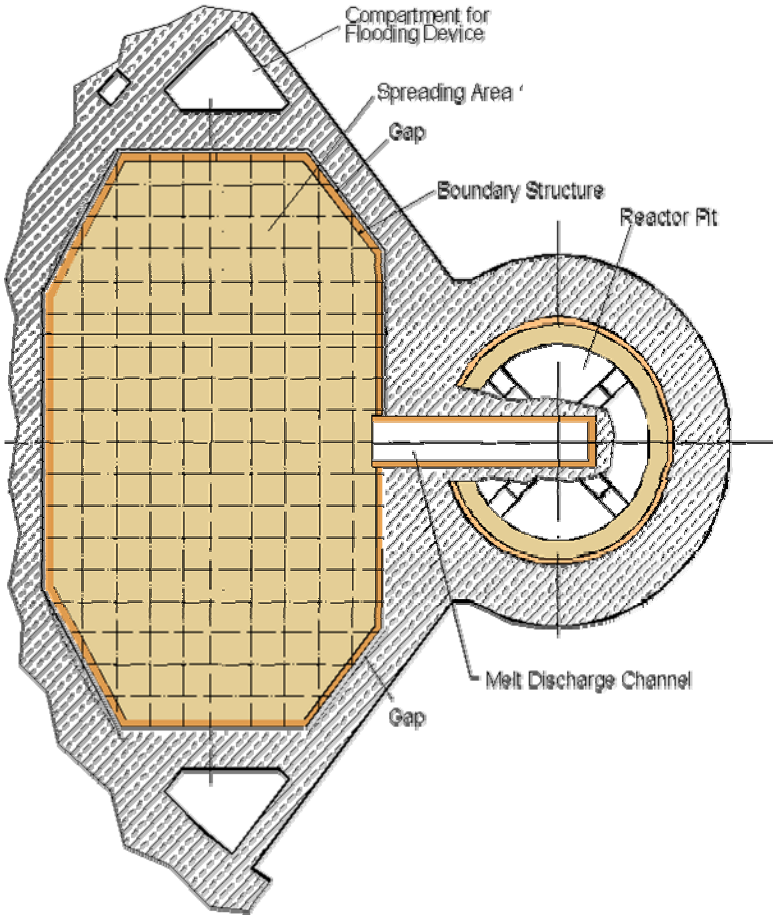

Spreading Area and Cooling Structure

- The core melt is retained within the spreading area and passively cooled on all sides
- The cooling structure is assembled from finned iron elements protected with concrete
- Melt flooding is passively actuated by thermally sensitive initiators
- Water from the IRWST will fill the cooling channels and overflow onto the melt surface

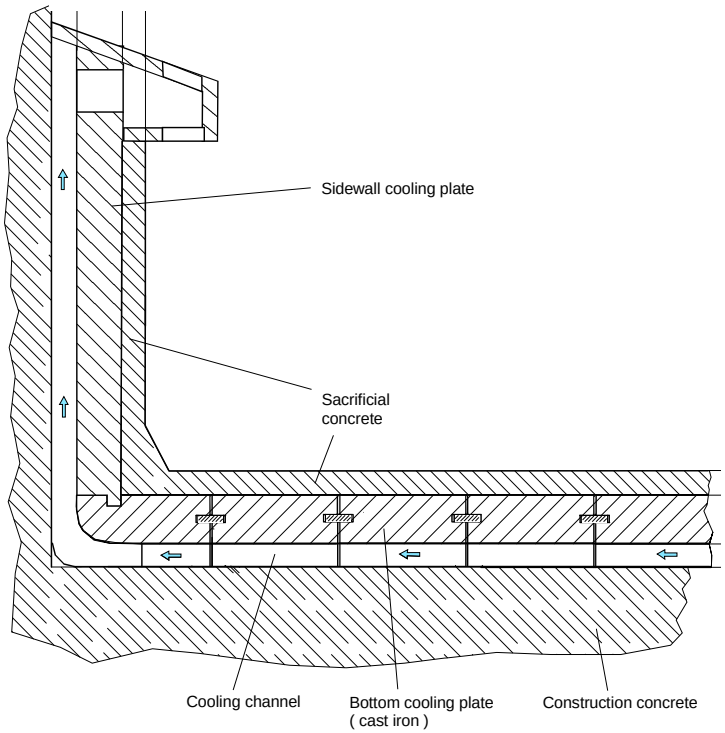

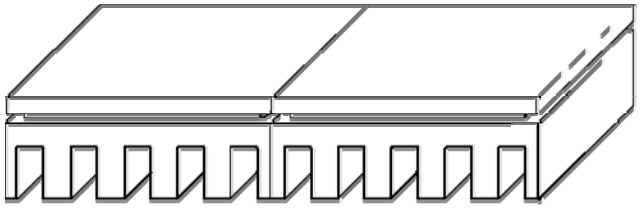

Melt Stabilization and Cooling

Passive Melt Cooling

- Gravity-driven overflow of water from the IRWST
- At equilibrium water level, cooling is established also for debris remaining within transfer channel and lower pit

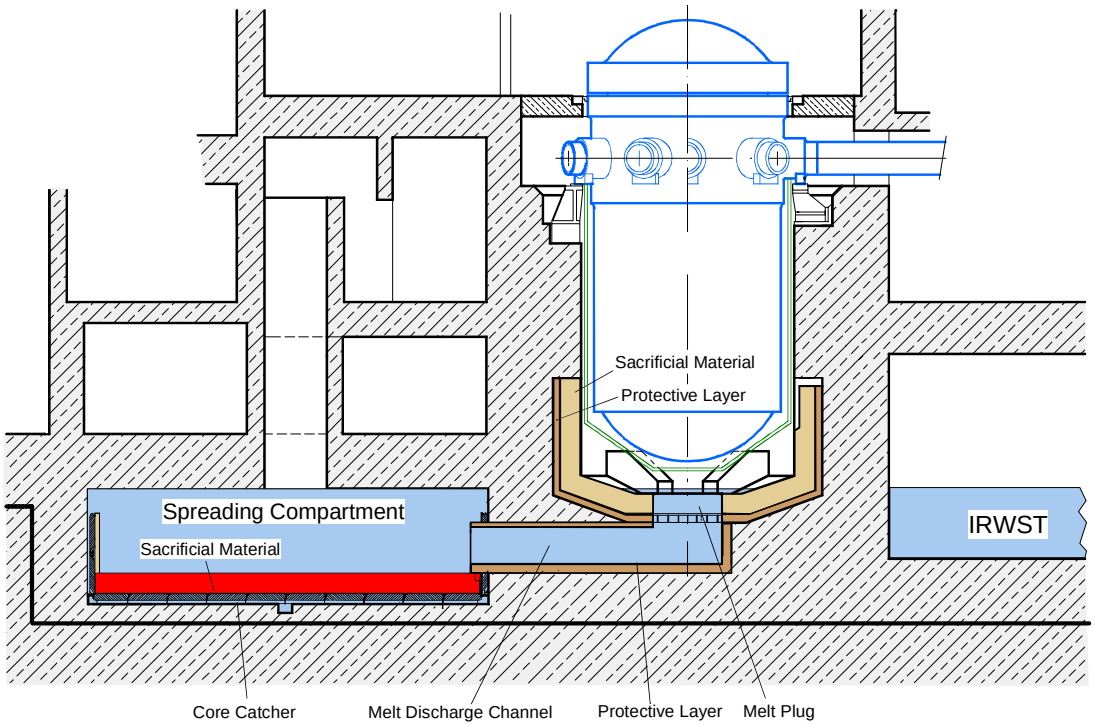

No actions necessary for ~12 hours to maintain containment pressure within design limits

Severe Accident Heat Removal System

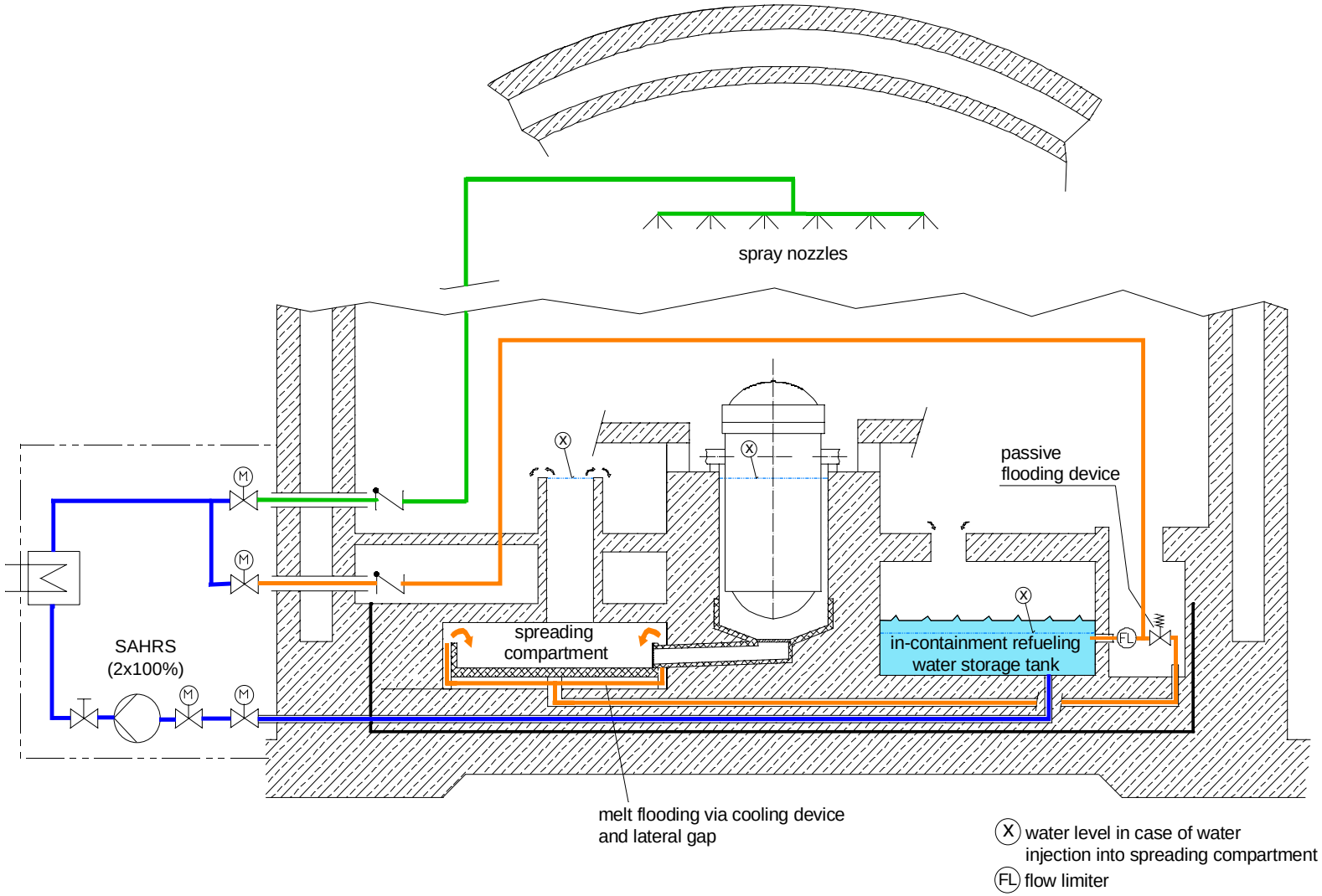

Long-Term Containment Heat Removal

Active Melt Cooling

- Water injection by the SAHRS into the core catcher with overflow into the IRWST
- The elevated water level establishes long-term cooling for all debris that potentially remained in either the transfer channel, the pit, or the RPV

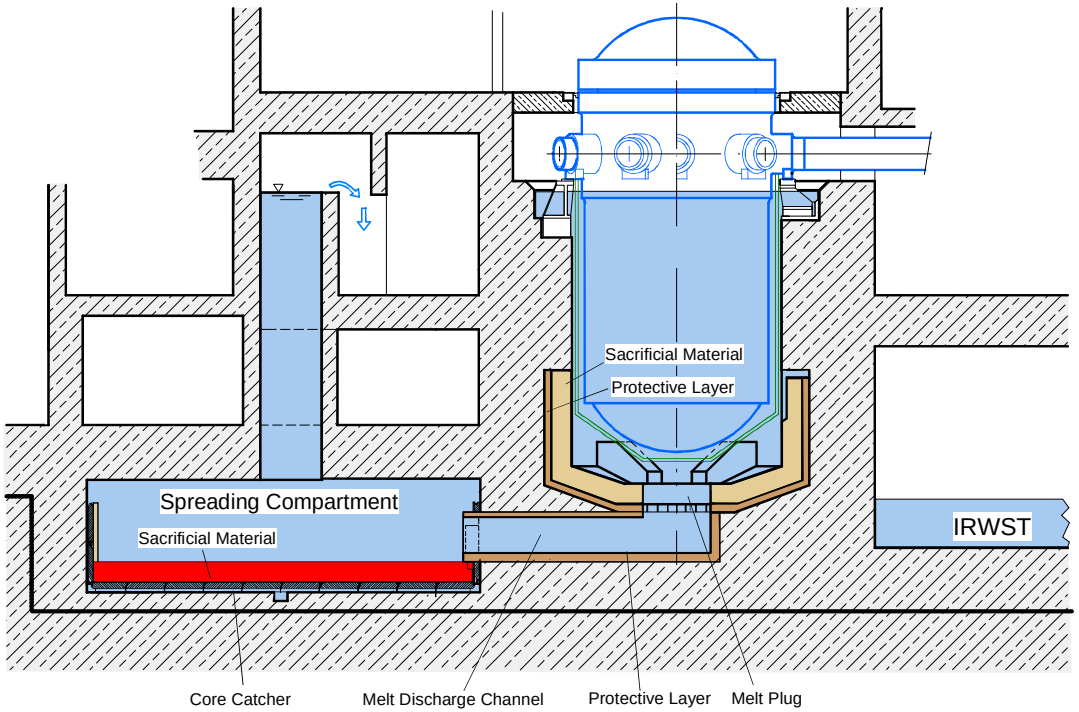

Formation of a sub-cooled water pool above the melt avoids the need for further containment spraying (atmospheric pressure)

Combustible Gas Control System (CGCS)

- **The CGCS is a dedicated system to manage hydrogen risk**
- **Maintains the average concentration of hydrogen in the containment atmosphere from complete clad oxidation below 10% (by volume)**
- **Reduces atmospheric concentrations of hydrogen below ignition limits (4%) prior to containment spray actuation**
- **Adiabatic isochoric complete combustion (AICC) pressure from global combustion is below the containment design pressure for representative sequences**

Combustible Gas Control System

- HRS includes passive autocatalytic recombiners (PARs)
- PARs distributed throughout containment
- FANP PARs have increased efficiency, even in a steam saturated atmosphere
- Effectiveness demonstrated through testing programs

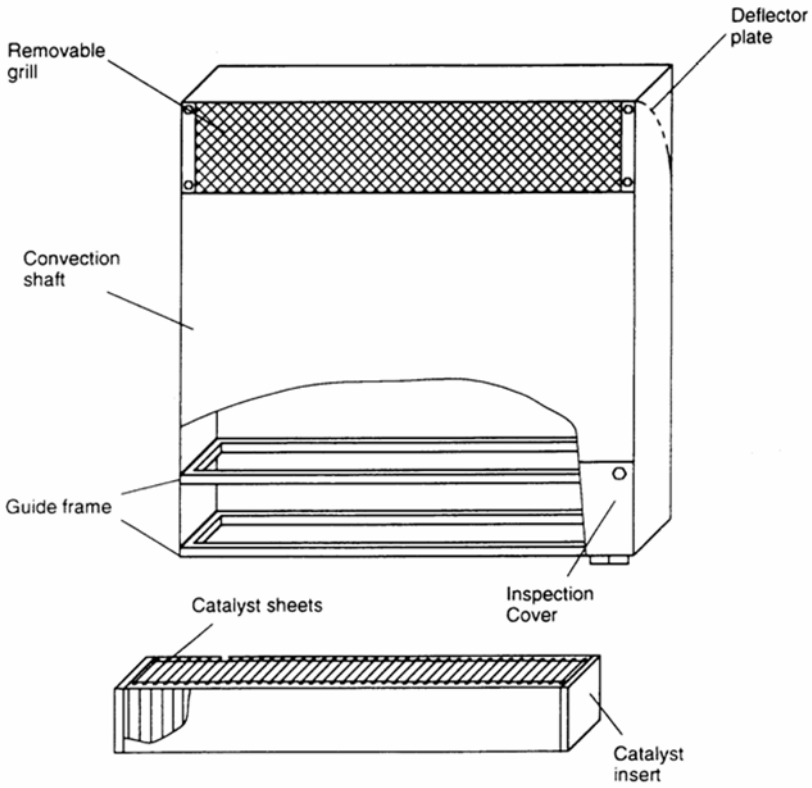

R&D Basis for U.S. EPR Severe Accident Features

- U.S. EPR features build upon the results of testing programs, for example:
  - ACE, MACE, OECD-MCCI programs at ANL
  - CORESA, KALI, H2PAR, KATS programs in Europe
  - FANP-CHF program at FANP
- R&D basis supports deterministic design conclusions and validation of analytical codes
- Details of testing programs will be addressed in the topical report and can be discussed in a later meeting

U.S. EPR Licensing Basis

- Consideration of severe accidents is an integral part of an NRC licensing review but it is not part of the "design basis"

- NRC guidance for severe accident mitigation
  - Non-safety related systems
  - Not seismically qualified
  - Equipment survivability, not qualification
  - Consideration of single failure not required

Analytical Approach for U.S. EPR Severe Accident Evaluation

Proposed Analytical Approach

- Establish a fully supported U.S. licensing basis
  - Demonstrate plant robustness using codes familiar to NRC
  - Facilitate licensing review
- Build upon reference plant methodology to support DC
  - Use of bounding sequences to address uncertainty
  - Use reference plant analyses for guidance in U.S. analyses
  - Demonstrate consistency with reference plant results
- Analytical approach
  - Use MAAP4.07 as primary integral code
  - Supplement with separate effect codes as needed
  - Benchmark analytical results with MELCOR 1.8.6

MAAP4 Applicability to U.S. EPR

- Primary integral code to support design verification and PRA
  - In-vessel sequences
  - Melt retention in reactor cavity
  - Cooling of melt in spreading room
  - Containment response
  - Hydrogen distribution
  - Source terms
- MAAP4 requires certain modifications to support U.S. EPR, for example:
  - Heavy reflector
  - Highly efficient PARs
- MAAP4.07 modifications will be validated based on relevant experimental results

Separate Effects Codes

- **MELTSPREAD-1: Evaluation of transient spreading process**
  - **Originally developed by Argonne National Laboratory**
  - **Used to support previous licensing efforts with the NRC**

- **WALTER: Evaluation of time-dependent temperature profiles within the melt, cooling structure and basemat**
  - **Developed by Framatome ANP**
  - **Used to model gate failure and melt stabilization**
  - **Validation of melting/freezing processes with simultaneous volumetric heat generation by known analytical solutions**

Summary of Analytical Approach

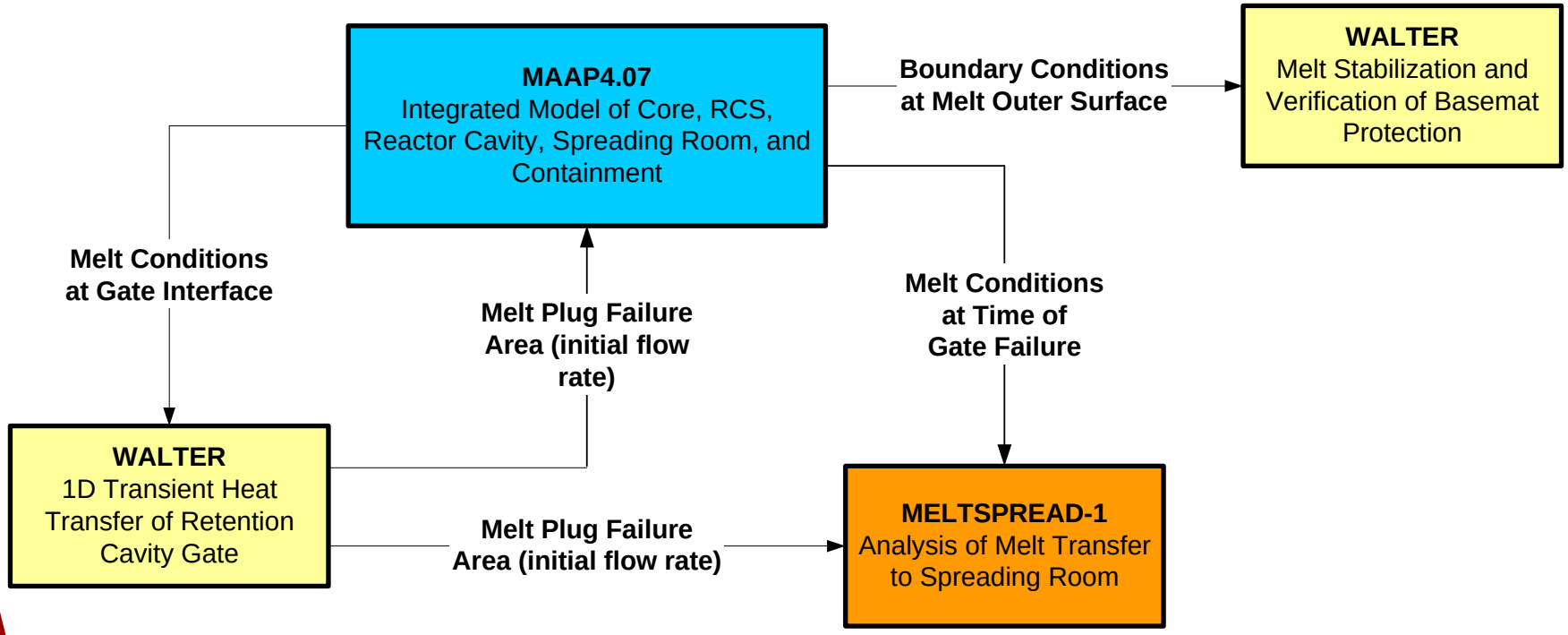

MELCOR 1.8.6

- **MELCOR will be used to support DC analyses**
  - **Enhances understanding via integral code comparisons**
  - **Provides added flexibility in modeling**
  - **Takes advantage of recent code advancements**

- **MELCOR has been used to facilitate STUK review of EPR**
  - **Representative analyses performed by VTT for STUK**

Future NRC Submittals

- Severe accident topical report to be submitted in late 2006
  - Demonstrate applicability of analytical approach
  - EPR severe accident mitigation bases and approach
  - Description of MAAP4.07 development
  - Verification/validation of analysis codes
  - Summary of applicable experimental programs
  - Representative results of integral analyses
  - Benchmark results with MELCOR 1.8.6

- DCD to be submitted by the end of 2007
  - Demonstrate compliance with relevant regulatory guidance
  - DCD will reference topical report for analytical basis
  - Contents consistent with previous licensing submittals
  - Document analytical results of severe accident evaluations

Summary

- The U.S. EPR includes features to manage a broad spectrum of severe accidents
- Severe accident management strategy is based on domestic and international research
- Features provide a robust basis to ensure the health and safety of the public

Summary and Next Steps

Sandra M. Sloan
Manager, Regulatory Affairs
New Plants Deployment

Summary

- The safety analysis for the U.S. EPR will be performed using methodologies previously approved by the NRC
- Changes to approved methodologies are expected to be very limited and will be explained and supported in the code applicability topical report
- The U.S. EPR provides robust severe accident mitigation features that improve performance for beyond-design-basis events
- A recognized analytical method will be used as the primary tool for severe accident evaluations
- The severe accident topical report will describe the analytical methods, the supporting testing, and the results of representative analytical evaluations

Next Steps

- **Next meeting**
  - **December 2005, Planning for Phase 2 of the pre-application review**
- **Continue development of resource estimate and schedule for Phase 2 activities**
  - **NRC estimate requested by January 2006**