Maria Korsnick
Site Vice President

R.E. Ginna Nuclear Power Plant, LLC
1503 Lake Road
Ontario, New York 14519-9364
585.771.3494
585.771.3943 Fax
maria.korsnick@constellation.com

Constellation Energy
Generation Group

December 19, 2005

U.S. Nuclear Regulatory Commission
Washington, D.C. 20555-0001

ATTENTION: Document Control Desk

SUBJECT: **R.E. Ginna Nuclear Power Plant**
Docket No. 50-244

Response to Requests for Additional Information Regarding Topics Described by Letter Dated November 3, 2005

By letter dated July 7, 2005, as supplemented by letters dated August 15 and September 30, 2005, R.E. Ginna Nuclear Power Plant, LLC (the licensee) submitted an application requesting authorization to increase the maximum steady-state thermal power level at the R.E. Ginna Nuclear Power Plant from 1520 megawatts thermal (MWt) to 1775 MWt. To complete its review, by letter dated November 3, 2005, (TAC NO. MC7382), the Nuclear Regulatory Commission (NRC) staff requested additional information.

Please note that the some information contained within this submittal is considered Proprietary to our design vendor Westinghouse. Accordingly, two versions of our response for additional information (RAI) have been prepared.

Attachment I contains the "Application for Withholding Proprietary Information from Public Disclosure". As Attachment 2 contains information proprietary to Westinghouse Electric Company LLC, it is supported by an affidavit signed by Westinghouse, the owner of the information. The affidavit sets forth the basis on which the information may be withheld from public disclosure by the Commission and addresses with specificity the considerations listed in paragraph (b) (4)of Section 2.390 of the Commission's' regulations. Accordingly, it is respectfully requested that the information which is proprietary to Westinghouse be withheld from public disclosure in accordance with10 CFR Section 2.390 of the Commission's regulations. Correspondence with respect to the copyright or proprietary aspects of the items listed above or the supporting Westinghouse affidavit should reference CAW-05-2077 and should be addressed to B.F. Maurer, Acting Manager, Regulatory Compliance and Plant Licensing, Westinghouse Electric Company LLC, P.O. Box 355, Pittsburgh, Pennsylvania 15230-0355.

AP01

1001450

Attachment 2 contains a proprietary version of the NRC's questions and Ginna's response. Attachment 3 contains a non-proprietary version of the NRC's questions and Ginna's response.

In addition to the information requested, the last section of attachments contains an errata page. This page describes typographical errors in our original submittal identified during the preparation of these responses.

The responses do not include any new regulatory commitments.

If you have any questions, please contact George Wrobel at (585) 771-3535 or george.wrobel@constellation.com.

Very truly yours,

Mary G. Korsnick

Mary G. Korsnick

STATE OF NEW YORK :
: **TO WIT:**
COUNTY OF WAYNE :

I, Mary G. Korsnick, being duly sworn, state that I am Vice President – R.E. Ginna Nuclear Power Plant, LLC (Ginna LLC), and that I am duly authorized to execute and file this response on behalf of Ginna LLC. To the best of my knowledge and belief, the statements contained in this document are true and correct. To the extent that these statements are not based on my personal knowledge, they are based upon information provided by other Ginna LLC employees and/or consultants. Such information has been reviewed in accordance with company practice and I believe it to be reliable.

Mary G. Korsnick

Subscribed and sworn before me, a Notary Public in and for the State of New York and County of Monroe, this 19 day of December, 2005.

WITNESS my Hand and Notarial Seal:

Sharon L Miller
Notary Public

My Commission Expires:

SHARON L. MILLER
Notary Public, State of New York
Registration No. 01MI6017755
Monroe County
Commission Expires December 21, 2006

Attachments

Cc: S. J. Collins, NRC
P. D. Milano, NRC
Resident Inspector, NRC

Mr. Peter R. Smith
New York State Energy, Research, and Development Authority
17 Columbia Circle
Albany, NY 12203-6399

Mr. Paul Eddy
NYS Department of Public Service
3 Empire State Plaza, 10th Floor
Albany, NY 12223-1350

Attachment 1
Application for withholding Proprietary Information

Westinghouse

Westinghouse Electric Company
Nuclear Services
P.O. Box 355
Pittsburgh, Pennsylvania 15230-0355
USA

U.S. Nuclear Regulatory Commission
Document Control Desk
Washington, DC 20555-0001

Direct tel: (412) 374-4419
Direct fax: (412) 374-4011
e-mail: maurerbf@westinghouse.com

Our ref: CAW-05-2077

December 14, 2005

APPLICATION FOR WITHHOLDING PROPRIETARY INFORMATION FROM PUBLIC DISCLOSURE

Subject: "Responses to NRC Requests for Additional Information (RAIs) RE: Extended Power Uprate License Amendment (TAC No. MC7382) Transmitted by Letter dated November 3, 2005 from Milano (NRC) to Korsnick (Ginna)"

The proprietary information for which withholding is being requested in the above-referenced report is further identified in Affidavit CAW-05-2077 signed by the owner of the proprietary information, Westinghouse Electric Company LLC. The affidavit, which accompanies this letter, sets forth the basis on which the information may be withheld from public disclosure by the Commission and addresses with specificity the considerations listed in paragraph (b)(4) of 10 CFR Section 2.390 of the Commission's regulations.

Accordingly, this letter authorizes the utilization of the accompanying affidavit by Ginna Nuclear Power Plant, LLC.

Correspondence with respect to the proprietary aspects of the application for withholding or the Westinghouse affidavit should reference this letter, CAW-05-2077, and should be addressed to B. F. Maurer, Acting Manager, Regulatory Compliance and Plant Licensing, Westinghouse Electric Company LLC, P.O. Box 355, Pittsburgh, Pennsylvania 15230-0355.

Very truly yours,

B. F. Maurer, Acting Manager
Regulatory Compliance and Plant Licensing

Enclosures

cc: B. Benney
L. Feizollahi

bcc: B. F. Maurer (ECE 4-7A) 1L
R. Bastien, 1L (Nivelles, Belgium)
C. Brinkman, 1L (Westinghouse Electric Co., 12300 Twinbrook Parkway, Suite 330, Rockville, MD 20852)
RCPL Administrative Aide (ECE 4-7A) 1L, 1A (letter and affidavit only)

CAW-05-2077

AFFIDAVIT

COMMONWEALTH OF PENNSYLVANIA:

ss

COUNTY OF ALLEGHENY:

Before me, the undersigned authority, personally appeared B. F. Maurer , who, being by me duly sworn according to law, deposes and says that he is authorized to execute this Affidavit on behalf of Westinghouse Electric Company LLC (Westinghouse), and that the averments of fact set forth in this Affidavit are true and correct to the best of his knowledge, information, and belief:

B. F. Maurer, Acting Manager
Regulatory Compliance and Plant Licensing

Sworn to and subscribed
before me this 14th day
of December, 2005

Sharon L. Fiori
Notary Public

Notarial Seal
Sharon L. Fiori, Notary Public
Monroeville Boro, Allegheny County
My Commission Expires January 29, 2007
Member, Pennsylvania Association Of Notaries

(1) I am Acting Manager, Regulatory Compliance and Plant Licensing, in Nuclear Services, Westinghouse Electric Company LLC (Westinghouse), and as such, I have been specifically delegated the function of reviewing the proprietary information sought to be withheld from public disclosure in connection with nuclear power plant licensing and rule making proceedings, and am authorized to apply for its withholding on behalf of Westinghouse.

(2) I am making this Affidavit in conformance with the provisions of 10 CFR Section 2.390 of the Commission's regulations and in conjunction with the Westinghouse "Application for Withholding" accompanying this Affidavit.

(3) I have personal knowledge of the criteria and procedures utilized by Westinghouse in designating information as a trade secret, privileged or as confidential commercial or financial information.

(4) Pursuant to the provisions of paragraph (b)(4) of Section 2.390 of the Commission's regulations, the following is furnished for consideration by the Commission in determining whether the information sought to be withheld from public disclosure should be withheld.

(i) The information sought to be withheld from public disclosure is owned and has been held in confidence by Westinghouse.

(ii) The information is of a type customarily held in confidence by Westinghouse and not customarily disclosed to the public. Westinghouse has a rational basis for determining the types of information customarily held in confidence by it and, in that connection, utilizes a system to determine when and whether to hold certain types of information in confidence. The application of that system and the substance of that system constitutes Westinghouse policy and provides the rational basis required.

Under that system, information is held in confidence if it falls in one or more of several types, the release of which might result in the loss of an existing or potential competitive advantage, as follows:

(a) The information reveals the distinguishing aspects of a process (or component, structure, tool, method, etc.) where prevention of its use by any of Westinghouse's

competitors without license from Westinghouse constitutes a competitive economic advantage over other companies.

(b) It consists of supporting data, including test data, relative to a process (or component, structure, tool, method, etc.), the application of which data secures a competitive economic advantage, e.g., by optimization or improved marketability.

(c) Its use by a competitor would reduce his expenditure of resources or improve his competitive position in the design, manufacture, shipment, installation, assurance of quality, or licensing a similar product.

(d) It reveals cost or price information, production capacities, budget levels, or commercial strategies of Westinghouse, its customers or suppliers.

(e) It reveals aspects of past, present, or future Westinghouse or customer funded development plans and programs of potential commercial value to Westinghouse.

(f) It contains patentable ideas, for which patent protection may be desirable.

There are sound policy reasons behind the Westinghouse system which include the following:

(a) The use of such information by Westinghouse gives Westinghouse a competitive advantage over its competitors. It is, therefore, withheld from disclosure to protect the Westinghouse competitive position.

(b) It is information that is marketable in many ways. The extent to which such information is available to competitors diminishes the Westinghouse ability to sell products and services involving the use of the information.

(c) Use by our competitor would put Westinghouse at a competitive disadvantage by reducing his expenditure of resources at our expense.

(d) Each component of proprietary information pertinent to a particular competitive advantage is potentially as valuable as the total competitive advantage. If competitors acquire components of proprietary information, any one component may be the key to the entire puzzle, thereby depriving Westinghouse of a competitive advantage.

(e) Unrestricted disclosure would jeopardize the position of prominence of Westinghouse in the world market, and thereby give a market advantage to the competition of those countries.

(f) The Westinghouse capacity to invest corporate assets in research and development depends upon the success in obtaining and maintaining a competitive advantage.

(iii) The information is being transmitted to the Commission in confidence and, under the provisions of 10 CFR Section 2.390, it is to be received in confidence by the Commission.

(iv) The information sought to be protected is not available in public sources or available information has not been previously employed in the same original manner or method to the best of our knowledge and belief.

(v) The proprietary information sought to be withheld in this submittal is that which is appropriately marked in "Responses to NRC Requests for Additional Information (RAIs) RE: Extended Power Uprate License Amendment (TAC No. MC7382) Transmitted by Letter dated November 3, 2005 from Milano (NRC) to Korsnick (Ginna)," being transmitted by the Ginna Nuclear Power Plant, LLC letter and Application for Withholding Proprietary Information from Public Disclosure, to the Document Control Desk. The proprietary information as submitted by Westinghouse for the Ginna Station Extended Power Uprate is expected to be applicable for other licensee submittals in response to certain NRC requirements for justification of power plant uprating.

This information is part of that which will enable Westinghouse to:

(a) Provide information in support of plant power uprate licensing submittals.

(b) Provide plant specific calculations.

(c) Provide licensing documentation support for customer submittals.

Further, this information has substantial commercial value as follows:

(a) Westinghouse plans to sell the use of similar information to its customers for purposes of meeting NRC requirements for licensing documentation associated with power uprate licensing submittals.

(b) Westinghouse can sell support and defense of the technology to its customers in the licensing process.

(c) The information requested to be withheld reveals specific aspects of a methodology which was developed by Westinghouse.

Public disclosure of this proprietary information is likely to cause substantial harm to the competitive position of Westinghouse because it would enhance the ability of competitors to provide similar calculations, evaluations, analysis, and licensing defense services for commercial power reactors without commensurate expenses. Also, public disclosure of the information would enable others to use the information to meet NRC requirements for licensing documentation without purchasing the right to use the information.

The development of the technology described in part by the information is the result of applying the results of many years of experience in an intensive Westinghouse effort and the expenditure of a considerable sum of money.

In order for competitors of Westinghouse to duplicate this information, similar technical programs would have to be performed and a significant manpower effort, having the requisite talent and experience, would have to be expended.

Further the deponent sayeth not.

PROPRIETARY INFORMATION NOTICE

Transmitted herewith are proprietary and/or non-proprietary versions of documents furnished to the NRC in connection with requests for generic and/or plant-specific review and approval.

In order to conform to the requirements of 10 CFR 2.390 of the Commission's regulations concerning the protection of proprietary information so submitted to the NRC, the information which is proprietary in the proprietary versions is contained within brackets, and where the proprietary information has been deleted in the non-proprietary versions, only the brackets remain (the information that was contained within the brackets in the proprietary versions having been deleted). The justification for claiming the information so designated as proprietary is indicated in both versions by means of lower case letters (a) through (f) located as a superscript immediately following the brackets enclosing each item of information being identified as proprietary or in the margin opposite such information. These lower case letters refer to the types of information Westinghouse customarily holds in confidence identified in Sections (4)(ii)(a) through (4)(ii)(f) of the affidavit accompanying this transmittal pursuant to 10 CFR 2.390(b)(1).

COPYRIGHT NOTICE

By letter to the Nuclear Regulatory Commission (NRC) dated July 7, 2005 (Agencywide Documents Access and Management System (ADAMS) Accession No. ML051950123), as supplemented by letters dated August 15 and September 30, 2005 (ADAMS Nos. ML052310155 and ML052800223, respectively), R.E. Ginna Nuclear Power Plant, LLC (the licensee) submitted an application requesting authorization to increase the maximum steady-state thermal power level at the R.E. Ginna Nuclear Power Plant (Ginna) from 1520 megawatts thermal (MWt)to 1775 MWt, which is a 16.8 percent increase. This requested change is commonly referred to as an extended power uprate (EPU). To complete its review, by letter dated November 3, 2005, the NRC staff requests the following information:

METEOROLOGICAL INFORMATION

1. In Table 2.9.2-2 of the EPU Licensing Report (see Attachments 5 and 7 for non-proprietary and proprietary versions, respectively, to the July 7 application), the value for the 0-1 minute exclusion area boundary (EAB) tornado missile accident atmospheric dispersion factor (χ/Q value) was listed as 1.87 x 10^{-6} s/m^3. Table 3 of the NRC staff safety evaluation (SE) that supported Amendment No. 87, dated February 25, 2005 (ML050320491), approved the tornado missile accident χ/Q value as 2.17 x 10^{-6} s/m^3. In the footnote to Table 3, the NRC staff noted that the tornado missile accident x/Q value of 2.17 x 10^{-6} s/m^3 was provided in a response to a request for additional information (RAI) dated December 3, 2004. In its response to this RAI, the licensee explained that the value of 2.17 x 10^{-6} s/m^3 was based upon the shortest EAB distance (450 meters) mentioned in the Ginna Updated Final Safety Analysis Report (UFSAR), rather than an EAB distance of 503 meters that had been used by the NRC staff in a prior χ/Q calculation.

   a. Explain why the χ/Q value of 1.87 x 10^{-6} s/m^3 should be used in the dose assessment supporting the EPU amendment application when the shortest EAB distance is 450 meters and the associated χ/Q value is 2.17 x 10^{-6} s/m^3.

   b. Was a 0-1 minute χ/Q value used for the low population zone (LPZ) tornado missile accident dose assessment? If so, what was the 0-1 minute χ/Q value used? If a 0-1 minute χ/Q value was not used, was the 0-8 hour LPZ χ/Q value of 2.51 x 10^{-5} s/m^3 used for the entire 0-8 hour time period?

Response

a. The licensing report inadvertently used the χ/Q value, which was based on an EAB distance of 503 meters. The tornado missile accident dose analysis used the 0-1 minute EAB χ/Q value of 2.17E-6 sec/m^3. This χ/Q value is based on a 450 meter EAB distance.

b. The 0-1 minute tornado χ/Q value, used for the LPZ, is 4.14E-7 sec/m^3. The 1 min. to 8 hour value is 2.51E-5 sec/m^3, and is based on normal accident meteorology.

RADIOLOGICAL CONSEQUENCES OF DESIGN-BASIS ACCIDENTS INFORMATION

1. In Section 2.9.2.2.3 of the Licensing Report, the radiological consequences analysis for the locked rotor accident was described. The discussion does not indicate if a radial peaking factor was applied in determining the source term for this design-basis accident (DBA) analysis. Was a radial peaking factor applied, and if so, what value was applied? Provide the basis to support the value used.

   Response

   The radiological consequence analysis for the locked rotor accident assumes that rods producing 50% of the core power have failed. As such, the peaking factor equals 1.

2. In Section 2.9.2.2.4 of the Licensing Report, the radiological consequences analysis for the rod ejection accident was described. The release to the environment is assumed to occur through both containment atmosphere and reactor coolant system (RCS) inventory via primary-to-secondary leakage through the steam generators (SGs). What is the primary-to-secondary leakage rate assumed for each SG?

   Response

   The radiological consequence analysis for the rod ejection accident conservatively assumes a primary-to-secondary leak rate of 500 gallons per day per generator.

3. Table 2.9.2-6 of the Licensing Report indicates that the containment net free volume is 106 ft^3. This appears to be a misprint. Verify this parameter as used in the DBA dose analyses.

Response

The indicated containment volume of 106 ft^3 is a typographical error. The correct value is 1E6 ft^3. The correct value was used in all applicable dose analyses.

ELECTRICAL

1. Identify the nature and quantity of the megavolt amperes reactive (MVAR) necessary to maintain post-trip loads and minimum voltage levels as a result of the EPU.

   Response

   Two station auxiliary transformers, 12A and 12B provide offsite power to the Station. When Ginna is on-line, station unit transformer 11 provides power to non-safety related plant auxiliary loads. In the event of a Plant trip, transformer 11 is de-energized and necessary loads are transferred to the station auxiliary transformers. Each transformer has been reviewed to ensure its capability is not exceed in the event that it is the only source of offsite power to the Station.

   Transformers 12A and 12B, in their normal alignment, would supply approximately half the onsite loads each; however, for worst case loading conditions they have been evaluated independently, assuming each is required to supply all the load. To determine the impact of EPU conditions special load flow cases were run and compared to existing loading levels to ensure the capability of the transformers was not exceeded. The results of the load flow cases are documented in the EPU Engineering Report section 8.5.2. For transformer 12A the worst case EPU loading is 28.28 MVA (26.03 MW and 11.06 MVAR). This represents an increase of 1.78 MVA over the existing worst case loading and is below the transformer nameplate rating (37.3 MVA/41.8 MVA @ 55/65 degrees-C). For transformer 12B the worst case EPU loading is 28.30 MVA (26.03 MW and 11.10 MVAR). This represents an increase of 1.78 MVA over the existing worst case loading and is below the transformer nameplate rating (37.3 MVA/41.8 MVA @ 55/65 degrees-C).

   The 4KV and 480V motors represent the majority of the load on the station auxiliary transformers. This results in an inductive load on the transformers.

   The minimum voltage levels for EPU conditions have been evaluated in the EPU Engineering Report section 8.5.1. The degraded voltage at Ginna has been evaluated for EPU similar to the existing analysis. Load flow cases have been created to demonstrate that transient voltages do not fall below the maximum dropout voltage (377.2 V) for the 480 V loss of voltage relays and that continuous voltages do not fall below the maximum reset voltage (430.5 V) for the 480 V degraded voltage relays.

   The load flow cases have verified that continuous voltages do not drop below the degraded voltage relay settings.

The short term cases have indicated that the bus voltages could drop below the loss of voltage relays for the scenario with all offsite power being supplied via transformer 12A. Ginna correct this prior to EPU.

2. Identify the MVAR contributions that Ginna will be credited for providing to the grid following implementation of the EPU.

Response

Ginna Station has an agreement with Rochester Gas & Electric (RG&E) for the Station to provide grid support up to +/-100 MVAR at the grid connection (Station 13A).

EPU modifications will result in the Ginna main generator nameplate rating increasing to 667 MVA at 0.92 power factor lagging (+261 MVAR) and 0.975 power factor leading (-140 MVAR). After accounting for station loads, transformer losses, and voltage regulator setpoints the net MVAR capability to the grid at Station 13A is approximately +192 MVAR's lagging and -152 MVAR's leading.

Ginna's main generator is capable of providing both leading and lagging VARS in excess of the +/-100 MVAR stipulated in the Substation Operating Agreement with RG&E. MVAR output is limited based on contingency analysis of grid voltage for a trip of Ginna. When Ginna is absorbing large quantities of VARS the grid voltage will rise after a trip of Ginna. Conversely, when Ginna is exporting large quantities of VARS grid voltage will decrease after a trip of Ginna. Therefore the offsite power voltage immediately following a trip of Ginna Station is largely dependent on the Plant net generation being provided to the grid prior to the trip.

Ginna's Offsite Power Load Flow Study has established the minimum grid voltage on a Plant trip to be 111.8 KV, which is based on a review of actual Plant trip data. The worst case grid voltage is based on the trip which occurred on 3/7/1996 when Ginna was producing 100% power, exporting 112 MVARs to the grid. Utilizing this data, Ginna and RG&E produced Offsite Operability curves which provide operating limits in terms of pre-trip voltages and MVARS that will result in acceptable post-trip voltages.

Prior to escalating power to EPU levels, Ginna will re-evaluate the Offsite Operability Curves based on the configuration of offsite power circuits 751 and 767 and grid modeling data provided by RG&E. Ginna is currently working on a modification of offsite power circuit 751 which is expected to be implemented prior to escalating power to EPU levels.

3. After the implementation of the EPU, identify any anticipated changes in MVAR associated with Items 1 and 2 above.

Response

Questions 1 and 2 have been submitted with discussion of EPU capabilities and changes from existing design. Please refer to Questions 1 and 2 for discussions which pertain to this question.

4. Address the compensatory measures that the licensee would take to compensate for the depletion of the Ginna unit MVAR capability on a grid-wide basis. As a result of the implementation of the EPU, evaluate the impact of any MVAR shortfall on the ability of the offsite power system to maintain minimum post-trip voltage levels and to supply power to safety buses during peak electrical demand periods. The subject evaluation should document information exchanges with the transmission system operator.

Response

EPU will not result in a decrease in Ginna's capability to provide MVAR'S to the grid. The re-rating of the main generator and the changes being implemented to the main generator voltage regulator will actually increase the capability of Ginna to supply MVAR's to the grid.

Given the existing design of the offsite power system, Ginna has determined that the most limiting condition occurs when all power to the Station is supplied through circuit 751. Ginna's Offsite Power Operability Curves ensure that post trip grid voltages will remain above 111.8KV, which is necessary to maintain transient voltages above the loss of voltage relay settings and continuous voltages above the degraded voltage relay settings.

To ensure offsite power voltage will remain above 111.8 KV, the Transmission Operator (RG&E) takes immediate corrective action if post trip contingency analysis indicates the Station 13A 115 KV bus voltage would drop below 111.8 KV. These actions are described in the Substation Operating Agreement between Ginna and RG&E. Ginna's Operators have been provided Offsite Operability Curves which provide operating limits in terms of pre-trip voltages and MVARs that will result in acceptable post-trip voltages.

The limiting condition of 111.8 KV is based on the present design of the offsite power system, in which circuit 751 in fed from Station 204 and circuit 767 is fed from Station 13A. Ginna and RG&E are currently performing a modification of the offsite power system, such that both circuits 751 and 767 will be fed from

Station 13A. In addition to increasing the reliability of circuit 751, this modification will have an overall benefit of increasing the worst case voltages at the station since the most limiting cases are when 100% offsite power is fed through circuit 751. Implementation of this modification will also allow Ginna to expand its MVAR support agreement with RG&E beyond the existing limit of +/- 100 MVARS without challenging the undervoltage and loss of voltage relaying at Ginna.

RG&E's contingency monitor is being modified in 2006, prior to Ginna increasing its maximum power level per the EPU project. This will provide RG&E's system operations personnel real-time contingency monitoring with data collection directly at Station 13A.

5. Address whether the Station Blackout coping duration has changed as a result of the implementation of the EPU.

Response

The four hour Station blackout coping capability has not been changed as a result of the EPU at Ginna. The evaluation of station blackout is contained in Engineering Report section 8.10.12.

MATERIALS

1. In its evaluation of the effects of the 8.6 °F increase in temperature due to the EPU, the licensee listed the inspection requirements under First Revised NRC Order EA-03-009, Electric Power Research Institute Materials Reliability Program 117 (EPRI-MRP-117), and a potential American Society of Mechanical Engineers Boiler and Pressure Vessel Code (ASME Code) Case as requirements to manage the effects of primary water stress-corrosion cracking (PWSCC) on Alloy 690/52/152 materials. The licensee also stated that Ginna will continue to monitor the Industry programs and recommendations to manage the issue for the new vessel head and take appropriate actions as necessary. Provide more specific information as to what requirements will be followed at Ginna, or reference the pertinent commitment(s) that were accepted by the NRC staff under your license renewal application, to assure the effects of PWSCC will be managed.

2. Under its evaluation of the effects of the 3.2°F decrease in bottom mounted instrument (BMI) penetrations temperature due to the EPU, the licensee listed the inspection requirements that may apply such as Materials Reliability Program (MRP) guidance and NRC Bulletin 2003-02. Provide more specific information as to what requirements will be followed at Ginna, or reference the pertinent commitment(s) that were accepted by the staff under the Ginna license renewal application, to assure the effects of PWSCC on the BMI penetrations will be managed.

   Response to RAI 1 and 2

   Ginna Station has actively participated in the Alloy 600 Issue Industry response since its first discovery in the PWR community at Bugey Station in the early 1990's. Through its participation in the early US industry efforts through NUMARC (NEI) ADHOC committees formed in 1992, and later the EPRI MRP ITG, Ginna Station has remained at the forefront of the Alloy 600 Issue. Participation in the industry response group allowed Ginna to take a proactive response to the Alloy 600 head penetration issue by first performing owner elected exploratory examinations of the upper head conditions; and later being one of the first PWR's to order a replacement Reactor Vessel Closure Head using Alloy 690 penetration material.

   The Ginna response to the NRC bulletin 2003-02, issued on August 21, 2003, is contained in RG&E letter dated September 19, 2003. The 60 day post-inspection response to Bulletin 2003-02 is provided in RG&E letter dated December 9, 2003. NRC review and acceptance of the Bulletin 2003-02 is documented in NRC letter of November 8, 2004.

In the September 19, 2003 letter, Ginna committed to perform bare metal visual inspections of the lower Reactor Vessel Head penetrations beginning with the 2003 RFO. These inspections would continue each outage until revisions to the ASME code or industry recommendations justified a change to examination frequency.

The NRC letter February 20, 2004 issued the first revised order EA-0-009, establishing inspection requirements for reactor pressure vessel heads. Ginna evaluated the requirements contained within Section IV of the revised order and determined that it would comply as specified. In the March 8 2004 response, Ginna summarized the list of regulatory commitments. Ginna would calculate the susceptibility of the vessel head, perform visual inspections of the head (first inspection completed during the 2005 RFO), and perform visual inspections each RFO to identify potential boric acid leaks from pressure-retaining components above the vessel head.

Details of the results of the of examinations performed on the upper and lower reactor vessel heads are documented in a June 10, 2005 letter to the NRC from Mary G. Korsnick, entitled "Response to First Revised Order EA-03-009 and Bulletin 2003-02". It was concluded that both heads and penetrations had maintained their integrity and that subsequent inspections would continue in accordance with the above bulletin and revised order commitments. Also, a follow-up VT-1 examination at the upper head penetration 27 area would be conducted in 2006.

Commitments for the Ginna License Renewal effort associated with Reactor Vessel Lower Head penetrations are documented in the Safety Evaluation Report, related to the license renewal of R.E. Ginna Nuclear Power Plant, NUREG-1786. These commitments were to:

1) continue inspection of thimble tubes for wear
2) initiate inspection of thimble tubes for stress corrosion cracking beginning in 2009 and
3) perform VT-1 quality inspections at the SS fillet welds and BMI nozzle to safe end welds. (this commitment was modified to a combination of VT-1 and VT-3 examination per an April 8, 2005 response).

Going forward, Ginna station continues to actively participate in the EPRI Alloy 600 Issues Task Group (ITG) through representation at most Alloy 600 MRP ITG meetings. Ginna is also following current developments associated with the NEI 03-08 Initiative and is currently reviewing programs in order to align with the NEI-03-08 initiative. The NEI 03-08 initiative goal is to take a proactive approach in identifying and minimizing material degradation issues in advance of actual degradation mechanism presenting themselves in the field.

In summary, Ginna has been at the forefront of material degradation issues as demonstrated by being one of the first head PWR's to replace the Reactor Vessel Closure head. Ginna will continue to meet its commitments to Bulletin 2003-02, Revised Order EA-03-009, and License Renewal. Ginna will also continue to monitor industry developments on materials issues as the NEI 03-08 initiative as it evolves over time and take appropriate corrective actions as warranted.

3. Under its assessment for the effects of thermal aging of cast austenitic stainless steel (CASS), the licensee indicated that programs were proposed in Westinghouse Report WCAP-1 4575-A to manage the effects of thermal aging of CASS components. Furthermore, the licensee stated that a reconciliation of the subject WCAP lists applicant action items in Table 3.2.0-1.2 of the Licensing Report. Finally, the licensee stated that the 8.6°F increase in the hot leg temperature was assessed due to the EPU and that the effect of this change in the service temperature on the thermal aging was considered. Discuss in detail the applicant action items for the subject WCAP and why the 8.6°F increase in temperature due to the EPU is acceptable since there are action items associated with the WCAP that was referenced as the basis for acceptability. The discussion should include why the programs under the subject WCAP will adequately manage any increased thermal aging (if any) due to the 8.6°F temperature increase.

Response

The action item specified in Table 3.2.0-1.2 of the Ginna Station Licensing Renewal Report related to the assessment of effects of thermal aging of cast austenitic stainless steel (CASS) included an analysis of potential loss of fracture toughness during the period of extended operation (60 years). This is described in Section B2.1.34 of Appendix B to the Licensing Renewal Application.

A Ginna specific flaw evaluation (leak-before-break) considering the effects of the CASS RCS primary loop piping elbows was conducted by Westinghouse and documented in WCAP-15837, "Technical Justification for Eliminating Large Primary Loop Pipe Rupture as the Structural Design Basis for the R. E. Ginna Power Plant for the License Renewal Program," April 2002. The evaluation considered thermal aging degradation of the CASS RCS primary loop piping elbows utilizing correlations that were developed by Argonne National Laboratory (ANL) after doing research on thermal embrittlement of CASS (NUREG/CR-6177 & 4513 Revision 1). It was shown in WCAP-15837 that there is a large margin available considering the saturation fracture toughness values for the RCS including CASS elbows during the period of extended operation (60 years). The WCAP -15837 was approved by the NRC (see Section 4.7.7 of the Ginna License Renewal Safety Evaluation Report, NUREG-1786).

To support the EPU at the Ginna Station, the existing LBB analyses documented in WCAP-15837 were evaluated to address the proposed EPU conditions. The maximum stresses at the critical locations were impacted by less than 1% and the material tensile properties were also impacted by less than 1%. It was concluded that an increase of the hot leg temperature of 8.6° F due to EPU has negligible effects on flaw stability analysis documented in WCAP-15837 for the primary loop piping. There is also an insignificant impact on the fracture toughness values due to thermal aging as a result of an increase of the hot leg temperature by 8.6° F.

Assessment of CASS thermal aging degradation in this discussion, concentrated on its effects on the hot leg, since this section of the RCS pressure boundary with CASS components, is exposed to the highest temperature during plant operation. In the cold leg where CASS components are also present (elbows and pump casing), thermal aging degradation is also insignificant.

CIVIL AND MECHANICAL ENGINEERING

1. The licensee stated on Page 2.2.2.2-5 of Licensing Report that, "[d]uring the review of the present piping stress analysis design bases for the Service Water and Component Cooling Water Systems, some inconsistencies were identified between the operating temperatures assumed in the analyses and the maximum possible operating temperatures. The impact of these differences in operating `temperature upon the piping thermal stresses has been evaluated. The evaluations have determined that the existing piping design is acceptable due to the flexibility of the piping systems and high thermal stress margins available in the existing analyses." Provide a summary of the evaluation methodology, including acceptance criteria and results identifying the specific margins available in the existing analysis. In addition, provide the specific inconsistencies that were identified between the assumed operating temperature and maximum possible operating temperature.

   Response

   Component Cooling Water

   It was discovered that the operating temperature assumed in the CCW original pipe stress analyses was 105°F. Higher temperatures due to normal plant cooldown were not considered. The maximum operating temperature, as a result of EPU operating conditions, due to an increase in decay heat during normal plant cooldown, is limited to 170°F on the hot side and to 120°F on the cold side.

   The original stress analyses, using Residual Heat Removal rejecting RCS heat to CCW, did not consider CCW temperatures during plant cooldown. In order to address the above identified inconsistencies, the CCW system piping was re-analyzed using the temperature limits defined above for EPU operating conditions.

   Summary of Evaluation

   The original analyses (32 line segments) followed a conservative approach although non-conservative temperatures were used. (as described above).
   Note: Upon identification this issue was entered into the plant's corrective action process.

   In order to reconcile this deficiency identified above further review was performed.

   The methodology used for reconciliation is as follows:

- Stresses from the original calculations were increased by a thermal factor consisting of the ratio of the revised EPU temperature over the temperature used in the analysis, (i.e. factor = 2.86 for 170°F; factor = 1.42 for 120°F)

- Where revised stresses, identified in a) above, were found to be below the B31.1 allowable thermal stress value, the piping for those line segments was considered adequate.

- Where revised stresses, identified in a) above, were found to be above the B31.1 allowable thermal stress value, the piping for those line segment was modeled, using actual Stress Intensification Factors and pipe support stiffness values, and analyzed using the computer program PS+CAEPIPE. The analyses were performed in accordance with Ginna's current licensing bases (design criteria for Ginna's Seismic Upgrade Program, EWR-2512 as described in UFSAR section 3.9.2.1). Revised pipe stresses for all the re-analyzed segments were found to be within B31.1 allowable thermal stress values.

Support loads due to the revised thermal loadings were combined with support loads due to deadweight and seismic loads. Where appropriate, code case N411 damping was utilized to run OBE and SSE seismic cases. Pipe supports were found acceptable. Hence, no modifications to the CCW piping or supports were required.

Service Water

The inconsistency identified affecting the SW system is limited to the segment from the SW Return Line from CCW Heat Exchanger to a Wall Penetration. (Note: Upon identification this issue was entered into the plant's corrective action process.) This segment was analyzed for a temperature of 100°F. The temperature under EPU operating conditions is 101.3°F. This increase in temperature has no detrimental impact in the adequacy of this segment since the maximum thermal stress is 1466 psi compared to an allowable stress of 22500 psi.

2. On Page 2.2.2.2.-5, the licensee stated "[f]or piping systems which will experience plant modifications (e.g., MSR [moisture separator reheater] piping and relief valve modification) to address EPU conditions, the piping and support evaluations will be performed as part of the overall design change package associated with the specific plant modification." Provide a description of the modifications, including the location in the piping system and the EPU condition which necessitated the modification. Also, indicate when these evaluations would be available for staff review.

Response

Table 1.0 of the EPU Licensing Report provides the list of the Ginna Power Uprate planned modifications. The following modifications which impact the plant piping systems are provided below. The reason for the modification, the location in the plant and the piping system, and a description of the modification is provided. The PCR packages and associated analyses will be available in April 2006.

Modification Number 4: MSR Relief Valve Modification

There are four Moisture Separator Reheaters (MSRs) installed on the mezzanine level of the Turbine Building. The MSR relief piping extends from the MSR shell to outside the Turbine Building. The MSRs are ASME VIII qualified pressure vessels and are currently protected from over pressurization via six code required / qualified safety valves. Each safety valve discharges into its own vertical 20 inch exhaust stack in an "umbrella type" arrangement (i.e., the stack is not a hard connection to the safety valve discharge nozzle).

Following EPU, the existing six MSR safety valves will be undersized and the existing stacks with open junctions are not large enough to prevent blow back.

To provide overpressure protection for the MSRs at the increased operating parameters resulting from the EPU, the following changes will be made to the MSR safety valves and associated piping:

- One safety valve (SV) is to be reset to open at a pressure of 175 psig.
- The remaining five SVs are to be removed and replaced with rupture disks. The rupture disks will be designed to have a burst pressure that meets the ASME Section VIII over pressure protection requirements.
- The discharge piping from the rupture disks, as well as the piping downstream of the SV will be rerouted and include the installation of expansion joints and thermal expansion loops and a hard piped or closed connection to the existing 20 inch exhaust stacks.
- Seven new pipe supports will be installed to accommodate safety relief valve discharge loads in the new discharge piping.
- Supports upstream of the MSR relief valves are currently under evaluation. With respect to this upstream piping, it is anticipated that new supports may be required in the turbine building.

Modification Number 8: Miscellaneous BOP System Vents and Drains Modification

The MSR, 4th Pass Level Control Tank, Heater Drain Tank Dump to Condenser, and the 2nd Pass Level Control Tank are all located in the Turbine Building.

The following three modifications will be implemented:

1. The MSR drain lines to the 4th Pass Level Control Tanks are self-venting at pre-EPU conditions, but will be non-self-venting at EPU conditions. The scope of this modification is to add 1 inch vent lines from each MSRs' 4th Pass Level Control Tank to each MSRs' reheater (RH) excess steam line. Four new spring hangers are required to be installed to support these new vent lines.
2. The existing Heater Drain Tank Dump Valve to the condenser is not sized to pass adequate flow at uprate conditions at its present design basis of ½ the Heater Drain Tank Flow. The valve will be replaced with a larger capacity valve capable of passing the required EPU flows. One new spring hanger is to be added to accommodate the additional weight of the new, heavier, valve.
3. The MSR's 6 inch drain lines to the 2nd Pass Level Control Tank will not be self-venting at EPU conditions. A modification is required to replace a portion of each MSRs 2nd Pass Level Control Tanks' 6 inch drain line with 10 inch diameter piping. Three existing spring hangers cans will be replaced with larger capacity cans to accommodate the loads associated with his piping replacement. In addition, there is a 1 inch vent line to be installed from the high point of the new 10 inch pipe segment to the existing 3 inch vent line from the 2nd Pass Level Control Tank for each MSR. No supports are required to be modified for these new vent lines.

Additionally it was determined that the Condensate Heaters normal vent system orifice hole sizes are not adequate to meet the flow requirements of passing a minimum of 0.5% of the entering steam flow rate at EPU conditions. The scope of this modification will be to remove the existing orifice plates, enlarge the hole size and re-install the plates. No support modifications are required.

Modification Number 11: Install Actuator for Feed Isolation Valve

The existing manual Feedwater Isolation Valves (FWIVs) are located in the Intermediate Building just outside the containment in the feedwater piping to the steam generators. To mitigate the containment response to a postulated steam line break inside containment at EPU conditions, it is necessary to install an automatic isolation feature on the existing manual Feedwater Isolation Valves. Presently, the containment response analysis assumes a single failure of a Feedwater Regulating Valve to close and credits the Feedwater Pump Discharge Valves for isolation of the feedwater system. Moving the isolation boundary and changing the analysis-credited isolation stroke time from 80 seconds to 30 seconds, ensures

that the containment response will remain within design parameters.

The proposed change will install a pneumatic actuator on each valve such that the valves are maintained normally open and fail closed, and close following a loss of power. There is a potential that two existing pipe supports will be modified by adding higher strength parts to accommodate the load increases associated with the additional weight of the new FWIV actuators.

Modification Number 14: Feed Regulating Valve Replacement and Bypass Valve Trim Changes

The main feedwater regulating valve (MFRV) and main feedwater bypass valve (MFBPV) are located on mezzanine level of the turbine building and are in the feedwater supply piping to the steam generators. The feedwater system operating parameters associated will change following implementation of the uprate. As a result, the MFRVs and the MFBPVs will experience an increase in volumetric flow, a decrease in the inlet pressure, and an increase in outlet pressure. The overall result is an increase in flow through the valves with a decrease in available pressure drop across the valves. Since the existing MFRVs are not capable of providing necessary flow and pressure at the EPU conditions and the valves can not be modified by trim changes to provide necessary flow and pressure, the valves will be replaced.

In addition, the MFBPVs must be modified to meet new flow requirements. This requires modification of the valves by implementation of a trim change. No modifications are required to the existing pipe supports to accommodate the slight load increase due to the MFRV replacement.

Modification Number 20: Raise CST Overfill Line

The Condensate Storage Tanks (CSTs) are located in the basement of the Service Building and are the source of water for the preferred auxiliary feedwater pumps.

The CSTs do not have sufficient single tank water volume to support the calculated EPU Decay Heat Removal inventory requirements for the technical specification surveillance requirement SR 3.7.6.1. A modification is being implemented to raise the elevation of the tank overflow approximately 6 inches to the vendor specified maximum fill elevation of the tank (23 feet above tank bottom).

Since there are no load increases, there are no modifications required to the existing pipe supports to accommodate the modification to the CSTs.

Modification Number 21: Replace Various Snubbers and Rods on Main Steam and Feedwater Supports

Main Steam

Modification to the Main Steam (MS) system is a result of evaluating two hydraulic cases not considered in the original Ginna design bases, but considered for EPU operating conditions; Turbine Stop Valves (TSV) closure and Turbine Bypass Valves (TBV) opening,.

There are nine supports that need to be upgraded and one support that needs to be added. All these supports are located in the TB in the non safety related portion of the MS piping.

Upgraded supports:

- Five of the supports are hangers that need either standard components or structural steel upgraded, to be able to have larger carrying capacity.

  These supports are located in the TB on the 12" steam dump piping, off the common 36" MS header.

- Four are snubbers that need to be upgraded to withstand higher loading

  These snubbers are located on the 24" piping, between the common 36" MS header and the Turbine Stop Valves.

Added support

- One snubber

  This snubber is located on the common 36" MS header, between the Main Steam Isolation Valves and the 24" pipe branches.

More details are found in the response to RAI 3.

Main Feedwater

Modification to the Main Feedwater (MF) system results from an increase in load due to hydraulic transient associated with MFW regulator valve closure at EPU full power conditions.

There is one support that needs to be upgraded. It is a rod hanger located in the Turbine Building (TB) between the main Feedwater (FW) pump "B" and FW heater "5B"

More details are found in the response to RAI 3.

Modification Number 28: Install Air Tanks for Backup air Supply to Charging Pumps

The A charging pump speed controller does not have enough instrument air to allow operation above minimum speed for 1 hour or longer. A supply of compressed air will be installed in the auxiliary building basement. It is intended to provide a large enough volume of air to allow for speed control for charging pump A during a loss of all instrument and service air from Appendix R fire events.

The compressed air supply will be able to supply the auto and manual/local speed controllers for the A charging pump with no additional manual operator action other than selecting local for charging pump speed control.

The compressed air supply will have a large enough volume to allow operation of the A charging pump speed controller, using maximum air, for a minimum time period of one hour. The compressed air system will be set to provide backup air if the normal instrument air supply pressure falls below 80 psig.

The system will consist of a seismically wall-mounted air bottle rack that will hold four 310 ft3 air bottles. The header and tubing will be seismically supported to the wall and the outlet tubing will be routed to the A charging pump and local control station via a pre-existing air tubing tray.

Modification Number 30: Modify Turbine Gland Sealing Steam Spillover

The existing Ginna GSS design does not include a spillover line to dump any excess gland steam to the condenser. Based on the EPU operating condition, the high pressure turbine gland steam leakage at full power will increase as compared to the present gland leakage. Due to this increased leakage, the Turbine OEM recommended that a turbine gland steam spillover flow path be installed. The modification to the GSS provides a spillover path at EPU by replacing four existing 1" drain lines from the GSS header to the condenser (each having ~8 feet of piping) with four 1-1/2" drain line. Additionally, each 1-1/2" line will have a globe valve installed that can be manually throttled as needed to maintain the proper operating pressure in the gland steam supply piping to the low pressure turbine glands.

3. On Page 2.2.2.2-9, the licensee stated "[t]he results of the pipe support evaluations for systems impacted by EPU concluded that all supports remain acceptable, except for certain main steam and feedwater system pipe supports that require modification to accommodate the revised loads related to EPU conditions. The main steam and feedwater pipe support modifications are required to mitigate the larger flow induced fluid transient loads that resulted due to EPU conditions. The majority of these support modifications are required to mitigate the larger loads resulting from a turbine stop valve closure transient event. Also, one new snubber will also be installed on the main steam piping system. These pipe support modifications will be installed before the implementation of the EPU." Provide the following:

   a. Specific location and description of the main stream and feedwater system pipe supports that require modification to accommodate the revised loads related to EPU.
   b. Description of the modification to supports to accommodate the larger flow reduced transient loads, inducing the magnitude and nature of the existing and EPU loadings.
   c. Description of the analytical evaluation of the new snubbers in the main steam piping system.

Response a.

<u>Main Feedwater (MFW) system</u>

There is one support that needs to be upgraded. It is a rod hanger located in the Turbine Building (TB) between the main Feedwater (FW) pump "B" and FW heater "5B"

<u>Main steam (MS) system</u>

There are nine supports that need to be upgraded and one support that needs to be added. All these supports are located in the TB in the non safety related portion of the MS piping.

Upgraded supports:

- Five of the supports are hangers that need either standard components or structural steel upgraded, to be able to have larger carrying capacity.

  These supports are located in the TB on the 12" steam dump piping, off the common 36" MS header.

- Four are snubbers that need to be upgraded to withstand higher loading

  These snubbers are located on the 24" piping, between the common 36" MS header and the Turbine Stop Valves.

Added support

- One snubber

  This snubber is located on the common 36" MS header, between the Main Steam Isolation Valves and the 24" pipe branches.

Response b

Description of the modification to supports to accommodate the larger flow (reduced) **induced** transient loads, (inducing) **including** the magnitude and nature of the existing and EPU loadings.

Main steam

The five supports need to have their standard components and/or structural members upgraded. The revised EPU loads affecting these supports have increased about 50% over the existing loads

The four existing snubbers need to be replaced with larger size snubbers. The revised EPU loads have increased by 35 - 50 kips. as compared to loads for the existing snubbers.

One new snubber needs to be added to the piping system. This new load is 53 kips.

These loads result from the hydraulic analysis of two cases, Turbine Stop Valves (TSV) closure and Turbine Bypass Valves (TBV) opening, at operating conditions.

Feedwater

One support needs to have its standard support components replaced. The revised support load, due to EPU conditions, exceeds the present support load carrying capacity by 20%, the increase in load is due to hydraulic transient results associated with MFW regulator valve closure at EPU full power conditions.

Response c

Description of the analytical evaluation of the new snubber in the main steam system.

Stone and Webster performed a NUPIPE-SWPC computer analysis that generated piping stresses and loads. It used as input the time history forcing functions developed for the TSV closure and TBV opening conditions

Hand calculations and snubber catalogs were used to size the snubber, in addition the computer program STRUDL was used to design the structural frame to house the snubber.

4. Identify all piping systems that would experience high flow rates resulting from the EPU. Also, discuss the potential vibration issues that are likely to occur as well as the mitigating measures and corrective actions which would be adopted. Clarify whether or not the proposed vibration testing and verification program subsequent to the implementation of the EPU will conform with the requirement of ASME OM Code, Part 3, "Requirements for Preoperational and Start-up Vibration Testing of Nuclear Plant Piping System" and OM Code, Part 7, "Requirements for Thermal Expansion Testing of Nuclear Power Plant Piping Systems."

Response

Licensing Report Section 2.1.8 "Flow-Accelerated Corrosion" describes the BOP systems that would experience higher flow rates as a result of the EPU. These systems include:

- Main Steam System
- Extraction Steam System
- Heater Drains System, including Moisture Separator Reheater Drains
- Condensate and Feedwater System
- Gland Steam System

The vibration monitoring program for Ginna following EPU will utilize guidance provided in ASME OM Code Part 3. Based on an evaluation of the Ginna piping systems where increased flow rate may increase the possibility of potential vibration issues, it was determined that the initial classification of these systems, per OM Part 3, would be Vibration Monitoring Group 3 (VMG 3). This classification allows for the use of visual observation methods. This classification is consistent with conclusions drawn in accordance with OM Part 3 Section 3.1.1.3 (b) which allows for utilizing past experience with similar systems or system operating conditions as a basis for classifying piping system vibrations.

The guidance provided in OM Part 3 Section 3.2.3 for acceptance criteria for VMG 3 is being utilized for the Ginna Vibration Monitoring program.

The Visual Inspection Method being utilized at Ginna is consistent with OM Part 3 Section 4 and paragraph A1 of Non-Mandatory Appendix A. That is, guidance provided in OM 3 related to evaluation techniques, use of simple measuring devices, and precautions related to vents and drains, branch piping, multiple pump operation, sensitive equipment and welded attachments will be considered.
The systems which will be included in the vibration monitoring program are those systems where increased flow rate due to EPU occurs. The vibration monitoring program will include a review of Adverse Condition Reports (CRs) to identify any areas in the plant where historically vibration has been a concern. In addition, a review of vibration issues identified for similar plants will be performed and factored into the vibration monitoring program.

For systems that are not accessible for routine monitoring, isometric drawings will be used to locate items such as; vents, drains, branch piping, etc. A determination will be made based on the specific configuration of each item to evaluate how susceptible they may be to damage by vibration and to determine whether monitoring is required or not.

Accessible portions of these systems identified above will be walked down prior to EPU implementation to establish a baseline vibration state. This baseline vibration assessment walkdown will establish a list of locations that warrant continued observation during power ascension during implementation of EPU. This list of locations that warrant continued observation will include any identified historical areas of vibration concern and any location which exhibits vibration displacements of approximately 1/8 inch or greater as noted by visual observation aided by the use of simple tools such as rulers, optical wedge, spring hanger scale, etc. At locations requiring more precise displacement instrumentation such as, but not limited to, piezoelectric accelerometers will be used. Any locations selected to have data recorded with the use of instruments as part of the baseline vibration walkdown will continue to be monitored with instruments throughout power ascension during EPU implementation.

During power ascension at the time of EPU implementation, visual observations and instrumented data recording will be performed at the 85%, 88%, 91%, 94%, 97% and 100% EPU power levels. At each power level plateau there will be a hold for sufficient time to perform visual observations and data recording, if required, to assess the vibration response in the piping systems and at the locations identified to be of potential vibration concern. The observations and data obtained will be assessed to determine if the vibration response meets the acceptance criteria of OM Code, Part 3. Any instances of vibrations that are determined to be unacceptable will be addressed by making a plant modification.

Due to the small change in temperature and the associated small change in thermal displacement in these piping systems due to EPU, specific thermal expansion testing as outlined in OM Code, Part 7 is not required. However, during the hold points at the power level plateaus during EPU implementation, the experienced engineers responsible for the vibration monitoring walkdowns will also be observant of any thermal expansion problems such as crushed insulation or piping in contact with adjacent equipment.

5. The licensee provided a summary of the piping analysis results at EPU conditions in Table 2.2.2.2-1 of the Licensing Report. For some of the piping systems (e.g., main steam outside containment, feedwater inside loop B), the EPU stresses are very close to allowable values. Provide detailed calculations, including description of the service loading conditions operating temperatures transient, and flow induces vibration, for those cases where design margin have been determined to be 0.90 or greater.

Response

Table 2.2.2.2-1 of the Licensing Report currently provides the loading condition, existing and EPU stress levels, allowable stress levels, and a design margin (defined as the ratio of the EPU stress divided by the allowable stress) for applicable piping analyses.

The column titled "Loading Condition" indicates the applicable pipe stress loading condition being reported in the Table 2.2.2.2-1. The various "Loading Conditions" contained in the Table 2.2.2.2-1 are as follows:

- Thermal (Equation 13) which includes stresses related to thermal expansion.
- Occasional (Equation 12U and 12F) which includes stresses related "deadweight + pressure + seismic + fluid transients", as applicable.
- Thermal + Sustained (Equation 14) which includes stresses related to "deadweight + pressure + thermal expansion".

With respect to piping analyses containing design margins greater the 0.90 for EPU conditions, it should be noted that the existing design margins for all these piping analyses, with the single exception of MS-400 (main steam outside containment), are currently greater than 0.90. For example, the MS-300 Main Steam Outside Containment piping has a reported design margin for EPU conditions of 0.97 (for Occasional Equation 12U) based on the ratio of 16,008 (EPU stress) divided by 16,444 (allowable stress). The existing design margin for this piping is 0.94 based on the ratio of 15,447 (existing stress) divided by 16,444 (allowable stress). Hence, for this piping system, the actual stress increase resulting from the EPU is not significant. Note that the increased stress at EPU

conditions is primarily due to hydraulic transient loading increases. Ginna had not planned to submit the calculations to the NRC. However the calculations are available at the site for review

6. The licensee provided the maximum ranges of stress intensity and maximum cumulative fatigue usage factors from the analytical evaluation of the reactor vessel in Table 2.2.2.3-1 of the Licensing Report. In some instances, the calculated maximum range of stress intensity exceeded the limiting value. A simplified elastic-plastic analysis per Section NB3228.5 of the ASME Code was performed for these locations and shown to satisfy all applicable requirements. Provide a more detailed summary of the analysis results for the following locations where the calculated values are close to limiting values.

- Closure Studs
- Control Rod Drive Mechanism (CRDM) Nozzle
- Inlet Nozzle to Shelf Function
- External Support Brackets

Response

It should be noted that, in the discussions below, the reported results are based on the use of conservative concepts when modeling the transients during evaluation of stress range values when determining cumulative fatigue usage requirements by the code. In license renewal, the stress values and severity of plant transients were ascertained in a realistic fashion utilizing plant operating data. The purpose of the conservative design methodology evaluation is to ensure that EPU conditions do not invalidate the original fatigue design basis methodology.

<u>Methodology and Summary of Evaluation of Closure Studs and CRDM Nozzle</u>

The stresses and fatigue usage factors for the closure head, CRDM and vent nozzles, vessel flange, and closure studs were uprated based on the Babcock & Wilcox Canada (BWC) report for the Ginna replacement head. Since the transients in the BWC report are based on the replacement steam generator (RSG) program, graphical transient comparisons and transient comparisons using one-dimensional heat transfer analyses were performed to compare the RSG transients to the EPU transients. For those EPU temperature and pressure transients that proved to be more severe than their RSG counterparts, linear scaling factors were conservatively developed based on the results of the graphical and analytical transient comparisons and were applied in the stress and fatigue evaluations.

Closure Studs

For the closure studs, the BWC report reported a maximum stress intensity range of 94.8 ksi and a fatigue usage factor of 0.810. These are the pre-EPU values reported in Table 2.2.2.3-1 of the Licensing Report. As stated previously, these values are based on the transients and conditions from the RSG program. Since none of the RSG transients and conditions that produced the stress intensity range of 94.8 ksi is made more severe by the EPU, the stress intensity range of 94.8 ksi is not changed for the EPU and is therefore below the $3S_m$ limit of 103.4 ksi.

For the fatigue usage factor, approximately 2/3 of the usage factor of 0.810 is produced by RSG transients that are unaffected by the EPU. The transient most significantly affected by the EPU is the Loading/Unloading transient. The change to the peak stress intensity caused by the Loading/Unloading transient is based on a more severe EPU temperature transient and results in an increase in the usage factor from 0.810 to 0.963 for the EPU, which is still below the limit of 1.0.

CRDM Nozzles

For the CRDM nozzles, the BWC report reported a maximum stress intensity range of 72.2 ksi and a fatigue usage factor of 0.323. These are the pre-EPU values reported in Table 2.2.2.3-1 of the Licensing Report. Although the stress intensity range of 72.2 ksi exceeds the $3S_m$ limit of 69.9 ksi, the BWC report performed a simplified elastic-plastic analysis per Section NB-3228.5 of the ASME Code and showed that this location fulfilled all the requirements of NB-3228.5.

Two transients used in the evaluation of stress intensity range were found to be more severe for the EPU than for the RSG program. The changes to the stress intensities caused by the Loading/Unloading and Loss of Load transients are based on more severe EPU temperature transients and result in an increase in the stress intensity range from 72.2 ksi to 79.0 ksi for the EPU. Since this range exceeds the $3S_m$ limit of 69.9 ksi, a simplified elastic-plastic analysis per Section NB-3228.5 was performed by scaling the results of the elastic-plastic analysis in the BWC report. The BWC report indicated a stress intensity range, excluding thermal bending, of 32.4 ksi. The more severe EPU temperature transients listed above resulted in an increase in the stress intensity range, excluding thermal bending, to 35.6 ksi, which is still well below the limit of 69.9 ksi. This meets the requirement of NB-3228.5(a). The thermal ratcheting, temperature, and material requirements of NB-3228.5 (d), (e), and (f) that were shown to be met in the BWC report were unaffected by the EPU. Therefore, the simplified elastic-plastic analysis in the BWC report, as it pertains to those requirements, is still valid. Finally, the fatigue requirements of NB-3228.5(b) and (c) were shown to be met by the EPU fatigue evaluation, which is summarized in the next paragraph.

Four transients used in the fatigue usage factor evaluation were found to be more severe for the EPU than for the RSG program. The changes to the peak stress intensities caused by the Loss of Load, Step load Rejection, and Reactor Trip transients are based on more severe EPU temperature transients and the change to the peak stress intensity caused by the Step Load Decrease transient is based on a more severe EPU pressure transient. These changes result in an increase in the usage factor from 0.323 to 0.580 for the EPU, which is still below the limit of 1.0.

Methodology and Summary of Evaluation of Inlet Nozzle and External Support Brackets

The following is in response to the reviewer's request for a more detailed summary of the analysis results for the inlet nozzle and the external support brackets.

For most of the vessel components below the vessel flange, a vessel stress report for a similar plant was used as the baseline instead of the original Ginna stress reports. The evaluations of the inlet nozzle and the external support brackets were performed using this approach. The "similar plant" approach was used for the following reasons:

- The lumped transient approach used in the Ginna stress report is generally very conservative and compounding the conservatism by using lumped transients for the EPU would eventually lead to little or no stress or fatigue margins for future programs.
- The stress report for the "similar plant" evaluates the effects of transients on an individual basis, therefore stresses and fatigue could be evaluated on a transient-by-transient basis.
- Components of the "similar plant" are essentially identical to their Ginna counterparts with respect to geometry and material properties.

Since the transients and conditions in the "similar plant" stress report are based on conditions for the similar plant, graphical transient comparisons were performed to compare "similar plant" transients with Ginna RSG and EPU transients. External support load comparisons were also performed to compare "similar plant" loads with Ginna RSG and EPU loads. For those Ginna temperature and pressure transients and external loads that proved to be more severe than their "similar plant" counterparts, linear scaling factors were conservatively developed based on the results of the graphical transient and load comparisons and were applied in the stress and fatigue evaluations.

Inlet Nozzle

The original B&W stress reports did not report a maximum stress intensity range or fatigue usage factor for the inlet nozzles. Therefore, the pre-EPU values were indicated in Table 2.2.2.3-1 of the Licensing Report as "not reported". However, the "similar plant" stress report, which was used as the baseline for the EPU evaluations, reports a maximum stress intensity range of 38.8 ksi for the inlet nozzle to shell junction, and a maximum range of 30.8 ksi for the inlet nozzle safe end. The inlet nozzle at the support pad is a peak stress location and consequently is not evaluated for stress intensity range. With regard to fatigue, the "similar plant" report indicates a fatigue usage factor of 0.0179 for the inlet nozzle to shell junction, and a usage factor of 0.0282 for the inlet nozzle at the support pad location. A fatigue usage factor was not reported for the safe end because it was determined to be significantly lower than that for the nozzle to shell junction. These "similar plant" stress ranges and usage factors are based on the "similar plant" transients and conditions.

For the inlet nozzle to shell junction, none of the Ginna transients or external support loads was found to be more severe than the "similar plant" transients or external support loads that produced the maximum stress intensity range of 38.8 ksi. As a result, the stress intensity range of 38.8 ksi reported in the "similar plant" stress report remains valid for the EPU and is well below the $3S_m$ limit of 80.1 ksi. Three transients used in the fatigue usage factor evaluation of nozzle to shell junction were found to be more severe for Ginna than for the similar plant. The changes to the peak stress intensities caused by the Loss of Load and Step Load Rejection transients are based on more severe temperature and pressure transients for Ginna than for the similar plant. The change to the peak stress intensity caused by the Reactor Trip transient is based on a more severe temperature transient for Ginna than for the similar plant. These changes result in an increase in the similar plant fatigue usage factor from 0.0179 to 0.0329, which is still well below the limit of 1.0.

For the inlet nozzle at the safe end, the Ginna pressure and temperature transients for the Loss of Load condition were found to be more severe than those for the similar plant and, as a result, the maximum stress intensity range of 30.8 ksi reported for the similar plant increased to 35.8 ksi for the EPU. This stress range is still well below the limit of 49.2 ksi.

For the inlet nozzle at the support pad, the Ginna temperature transient for the Loss of Load condition was found to be more severe than that of the similar plant. As a result, the usage factor of 0.0282 reported for the similar plant increased to 0.0607 for the EPU.

External Support Brackets

The original B&W stress reports reported a maximum stress intensity range of 24.9 ksi and a fatigue usage factor of 0.020 for the external support brackets. Therefore, these values were reported as the pre-EPU values in Table 2.2.2.3-1 of the Licensing Report. However, the "similar plant" stress report, which was used as the baseline for the EPU evaluations, reports a maximum stress intensity range of 41.2 ksi and a fatigue usage factor of 0.715 for the external support brackets based on the "similar plant" transients and conditions. The large discrepancy between the fatigue usage factor in the B&W report and the usage factor in the "similar plant" stress report is mostly due to the fact that the "similar plant" report considered the large difference in temperature between the inside and outside of the vessel at the bracket and the B&W report did not consider this temperature difference. As a result, thermal stress was a major contributor to the fatigue usage factor calculated in the "similar plant" report but was considered to have no effect in the B&W report.

None of the Ginna transients or external support loads is more severe than the "similar plant" transients or external support loads that produced the maximum stress intensity range of 41.2 ksi. As a result, the stress intensity range of 41.2 ksi reported in the "similar plant" stress report remains valid for the EPU and is well below the $3S_m$ limit of 80.1 ksi.

Only one transient used in the fatigue usage factor evaluation was found to be more severe for Ginna than for the similar plant. The change to the peak stress intensity caused by the Loss of Load transient is based on a more severe pressure transient for Ginna than for the similar plant. This change results in an increase in the similar plant fatigue usage factor from 0.715 to 0.979, which is still below the limit of 1.0.

7. The licensee provided a comparison of the calculated vessel support loads in Tables 2.2.2.3-3 and 2.2.2.3-4 of the Licensing Report. Discuss, and justify the basis for, the limiting loads determined by Gilbert Associates for the normal/operating and faulted conditions.

Response

Gilbert Associates designed the reactor vessel support pedestals using design loads in the late 60's. Later in the 70's/ early 80's timeframe Westinghouse independently calculated load capacities for the vessel supports for comparison with faulted loads. These same load capacities were later used for justification of loading calculated for a snubber replacement program. While reviewing the historical loads and load capacities for the current EPU program, it was determined that the loads used by Gilbert Associates in the original design of the

pedestals were more limiting than the load capacities calculated in the late 70's/ early 80's. The calculation performed for the EPU reconciles the loads predicted for the EPU, as well as the snubber replacement program, with the design loads used by Gilbert Associates. It was shown that the EPU loads and snubber replacement loads are acceptable.

(It should be noted that all of the structural calculations performed for the vessel supports were hand calculations. FEA models were only used to determine the loads on the supports.)

8. The licensee stated on Page 2.2.2.3-2 of the Licensing Report" [a}nalysis of flow induced vibration is not included in the licensing basis for Ginna. However, it was considered for more susceptible components that would experience a significant flow increase under EPU conditions. Reactor vessel components were evaluated and deemed unaffected by EPU conditions due to their heavy construction and small increase in flow, if any." Identify the components which were considered more susceptible to flow induces vibration. Also, provide justification to demonstrate their structural adequacy.

Response

The only components that are susceptible to flow induced vibration and wear in the steam generators are the U-tubes. An analysis of the U-tubes for flow induced vibration and wear was performed for the Power Uprate conditions and it is summarized in Section 2.2.2.2.4 of the EPU Licensing Report.

9. The licensee provided the EPU evaluation summary at critical locations of primary and secondary side pressure boundary components in Table 2.2.2.5.2-1. The results indicated that, at several critical locations, the fatigue limit was determined to be very close to the allowable value 1.0. Provide a detailed summary of the analytical evaluation in the following locations:

- Cone-to-lower-shell juncture
- Lower-shell at ring girder
- Secondary manway studs
- Primary head at support
- Tubesheet blowdown and manway drain holes
- Lower Shell at Tubesheet
- Lower shell handholes and studs
- Seal Skirt

In addition, discuss the fatigue monitoring and/or other mitigating measures relative to the primary manway studs and other locations where the calculated fatigue limit does not meet the 40-years design life limit. Also, provide a detailed discussion regarding the decrease in cumulative usage factors (CUFs) in the lower shell handholes and the seal skirt for the EPU condition.

Response
Cone-to-lower-shell juncture

Non-Power Uprate Analysis

Prior to the EPU, the cone-to-lower-shell juncture was analyzed using a 2D axi-symmetric finite element model of the conical shell and portions of the adjoining lower shell and steam drum shell. The model was created using the ANSYS finite element program. The fluid temperature ramps for the Level A and B transients were used as input to ANSYS to determine the metal temperature variation with time. Heat transfer coefficients were derived based on formulations for forced convection, natural convection and boiling heat transfer based on flow velocities and the properties of water at the secondary side temperatures.

Instead of evaluating all thermal transients, a bounding scheme (transient lumping) was used whereby the less severe transients were omitted from the thermal evaluation and

their cycles were assigned to the more severe transients during the fatigue evaluation. In this regard, only the Plant Heatup (200 cycles), Plant Cooldown (200 cycles) and Loss of Power (40 cycles) transients were individually evaluated. All other thermal transients (Plant Loading, Plant Unloading, 10% Step Increase, 10% Step Decrease, 50% Step Reduction, Reactor Trip, Loss of Flow and Loss of Load) were lumped into a single bounding transient having 17,460 cycles. This was conservative since the lumped transient had bounding thermal and pressure variations combined with a large number of cycles. Of the analyzed transients, the dominant transient for the cone-to-lower-shell juncture was the Loss of Power transient where a prescribed drop in feedwater temperature from 425°F to 50°F in 5 seconds was analyzed by conservatively considering the feedwater to be the film temperature for the juncture and lower shell. In reality, mixing of the feedwater with the secondary side fluid would occur and this would significantly reduce the thermal shock considered in the analysis. As a result of the conservative representation of the Loss of Power transient, severe thermal stresses at the juncture were obtained.

The thermal analysis results from ANSYS were reviewed to determine the appropriate times during the transients for subsequent analysis of total and linearized stress levels that include both thermal and pressure stresses. The critical times were chosen by monitoring component through thickness temperature differences, between components temperature differences, and skin temperature differences. The time-temperature histories of these differences were plotted and the times for which they reached extremes were tabulated. These times formed the basis upon which subsequent analysis of total and linearized stress levels were performed. The temperature distribution and the corresponding pressure at each critical time were used in ANSYS to determine the pressure plus thermal loading stresses in static analyses.

The pressure test transients were considered using a bounding scheme whereby the more severe Secondary Side Hydrostatic Tests (10 cycles) were conservatively considered to represent the Secondary Pressure Tests (40 cycles) and Secondary Side Leak Tests (200 cycles). Therefore, 250 cycles of the Secondary Side Hydrostatic Tests were analyzed.

Linearized and total stress intensities were obtained through various sections of the model using the ANSYS stress linearization option. These locations are referred to as Structural Class Lines (SCLs). In-house post-processing programs developed at Babcock & Wilcox Canada were used to calculate the linearized stress intensity ranges and fatigue usage factors for all SCLs.

Due to the severe thermal stresses from the Loss of Power transient, the cone-to-lower-shell juncture was found to the most highly stressed location in the analysis with a stress intensity range of 99.7 ksi. Since this result exceeded the 3Sm limit, a Simplified Elastic-Plastic Analysis was performed per 1986 ASME B&PV Section III, Sub-Section NB-3228 and the fatigue usage factor was calculated with a penalty factor to account for plastic strain. The cumulative usage factor was calculated to be 0.196.

It should be stated that the above stress intensity range included stresses from the OBE earthquake loading of the nearby ring-girder (3.6 ksi) and added discontinuity stress from the nearby upper handhole (0.5 ksi). The ring-girder stresses were calculated from a 3D finite element model of the secondary shell and attached ring-girder subjected to prescribed OBE external loading. The handhole discontinuity stresses were calculated from a 2D axi-symmetric model of the handhole under pressure and thermal transient loading.

Power Uprate Analysis

The new stress intensity range under the EPU conditions at the cone-to-lower-shell juncture was calculated by multiplying the original range by the ratio of the secondary side temperature (Tsat) ranges occurring during the Power Uprate and Non-Power Uprate condition. This ratio was 1.3 and it conservatively bounded the ratio of feedwater temperature ranges for Power Uprate versus Non-Power Uprate (1.03) specified for the Loss of Power transient. Although the latter pro-rating factor would have been more appropriate to use since the stress intensity range was produced by variations in feedwater temperature instead of steam temperature, the higher factor of 1.3 was conservatively chosen. The resulting stress intensity range was 128.4 ksi and, after performing a Simplified Elastic-Plastic Analysis per 1986 ASME B&PV Section III, Sub-Section NB-3228, the cumulative usage factor was calculated to be 0.98.

Lower-shell at ring girder

Non-Power Uprate Analysis

The stresses in the lower-shell at the ring-girder location were calculated using the same methodology described above for the cone-to-lower-shell juncture.

The stress intensity range was found to be 82.7 ksi. Like the cone-to-lower-shell juncture, this range was dominated by the conservative representation of the Loss of Power transient. The ring-girder stresses in the shell at this location were determined to be 9.6 ksi. Since the combined stress intensity range was 82.7 ksi + 9.6 ksi = 92.3 ksi and was lower than that at the cone-to-lower-shell juncture, a fatigue usage factor was not calculated since it would be bounded. Instead, the fatigue usage factor at the cone-to-lower-shell juncture was reported.

Power Uprate Analysis

The new stress intensity range under the EPU conditions in the lower-shell at the ring girder was calculated by multiplying the original range by the ratio of the steam temperature ranges occurring during the Power Uprate and Non-Power Uprate condition. This ratio was 1.3 and conservatively bounded the ratio of feedwater temperature ranges for Power Uprate versus Non-Power Uprate (1.03) specified for the Loss of Power transient. Although the latter pro-rating factor would have been more appropriate to use

since the stress intensity range was produced by variations in feedwater temperature instead of steam temperature, the higher factor of 1.3 was conservatively chosen. The resulting stress intensity range was 117.1 ksi. The usage factor was considered to be the same as that at the cone-to-lower-shell juncture.

Tubesheet blowdown and (shell) drain holes

Non-Power Uprate Analysis

Prior to the EPU, the stresses at the tubesheet blowdown and shell drain holes were analyzed using a 2D axi-symmetric finite element model of the tubesheet, primary head, and a portion of the adjoining lower shell. The tubesheet was modeled using an equivalent solid plate concept per 1986 ASME B&PV Section III, Appendix A-8000. The model omitted the divider plate from the model so it conservatively over-estimated the strains/stresses in the tubesheet. The model was created using the ANSYS finite element program. The fluid temperature ramps for the Level A and B transients were used as input to ANSYS to determine the metal temperature variation with time. Heat transfer coefficients were derived based on formulations for forced convection, natural convection and boiling heat transfer based on flow velocities and the properties of water at the secondary side temperatures.

Instead of evaluating all thermal transients, a bounding scheme was used whereby the less severe transients were omitted from the thermal evaluation and their cycles were assigned to the more severe transients during the fatigue evaluation. In this regard, only the Plant Heatup (200 cycles), Plant Cooldown (200 cycles), Plant Loading (14,500 cycles), Plant Unloading (14,500 cycles), 10% Step Increase (2,000 cycles), and 10% Step Decrease (2,000 cycles) transients were individually evaluated. All other thermal transients (50% Step Reduction, Reactor Trip, Loss of Flow, Loss of Power and Loss of Load) were conservatively lumped into two separate bounding transients having 880 cycles and 120 cycles.

The thermal analysis results from ANSYS were reviewed to determine the appropriate times during the transients for subsequent analysis of total and linearized stress levels that include both thermal and pressure stresses. The critical times were chosen by monitoring component through thickness temperature differences, between components temperature differences, and skin temperature differences. The time-temperature histories of these differences were plotted and the times for which they reached extremes were tabulated. These times formed the basis upon which subsequent analysis of total and linearized stress levels were performed. The temperature distribution and the corresponding pressure at each critical time were used in ANSYS to determine the pressure plus thermal loading stresses in static analyses.

The Primary and Secondary Side Pressure Tests (40 cycles each) and Primary and Secondary Side Leakage Tests (100 cycles and 200 cycles respectively) were also analyzed in static analyses.

Linearized and total stress intensities were obtained through various sections of the model using the ANSYS stress linearization option. These locations are referred to as Structural Class Lines (SCLs). In-house post-processing programs developed at Babcock & Wilcox Canada were used to calculate the linearized stress intensity ranges and fatigue usage factors for all SCLs.

To account for the presence of the blowdown and shell drain holes in fatigue, the linearized stress intensity is conservatively multiplied by a Stress Concentration Factor (SCF). The blowdown holes are located at the outside edge of the perforated pattern of tube holes in the tubesheet where the principal stresses have negative biaxiality (i.e. the in-plane principal stresses have opposite signs). An SCF of 4.0 was used in the analysis since it bounds all negative biaxiality (i.e. an SCF of 4.0 is applicable for the maximum negative biaxiality of –1.0). In reality, the negative biaxiality is greater than –1.0 so the choice of 4.0 for the SCF is conservative. The cumulative usage factor was calculated to be 0.60 (NOTE: a typographical error in Table 2.2.2.2.5.2-1 of the EPULR lists this as 0.90).

Power Uprate Analysis

When calculating a fatigue usage factor, a fatigue pass table is created. This table lists for each pass, in descending order of magnitude, the maximum alternating stress between a pair of transients, the corresponding number of cycles for that alternating stress, the number of allowed cycles, and a usage factor. Fatigue passes are created until no cycles are left between transients to form a pass. The sum of these individual usage factors for each pass determines the cumulative usage factor. To re-calculate the usage factor for the EPU conditions, the fatigue pass table that was used to derive the original usage factor was re-created and the alternating stresses in each pass were pro-rated by a factor that quantified the temperature/pressure variation, and thus, alternating stress increase for Power Uprate. To quantify the change in the range of stress occurring during each transient for Power Uprate versus Non-Power Uprate, an approximate method is to determine the ratios between the pressure and temperature variations and to pro-rate the range of stresses by these ratios. Variations were compared for the primary side inlet and outlet temperatures, secondary side temperatures, primary side pressures, secondary side pressures, and primary to secondary side pressure differentials. The bounding variation ratio for each transient was used when pro-rating a fatigue pass that involved that transient.

An example of this methodology is provided as follows:

The Loading and Unloading transients were found to have temperature or pressure

variations that were 32% greater in magnitude for the Power Uprate conditions when compared with the Non-Power Uprate conditions. Therefore, the alternating stress between the Loading and Unloading transients was pro-rated by 1.32 before calculating the fatigue usage factor. If the maximum alternating stress was between Loading and Plant Heatup, the alternating stress was still pro-rated by 1.32 even though the Plant Heatup transient was unchanged for the Power Uprate. In this regard, this methodology can be concluded to be conservative. However, it still resulted in a fatigue usage factor less than 1.0 for the tubesheet blowdown and shell drain holes. The cumulative usage factor was calculated to be 0.99. The actual fatigue usage factor is expected to be much lower than the calculated value of 0.99.

Lower Shell at Tubesheet

Non-Power Uprate Analysis

Prior to the EPU, the stresses in the lower shell at the tubesheet were calculated using the same methodology described above for the tubesheet drain holes. To account for the nearby lower shell handhole, the discontinuity stresses were added to the stress results on stress intensity basis. The discontinuity stresses were obtained from a 2D axi-symmetric finite element model of the lower handhole created using ANSYS (see response below for Lower Shell Handholes and Studs for more detail). A comparison was performed in that analysis between the stresses in a remote portion of the shell for all transients with those at the tubesheet location. The difference between these stress results was considered to be the discontinuity stresses. The cumulative usage factor was calculated to be 0.52.

Power Uprate Analysis

To re-calculate the fatigue usage factor for Power Uprate conditions, the original fatigue pass table was re-created and individual fatigue passes were pro-rated in the same manner as described above for the Power Uprate analysis of the tubesheet drain holes. As mentioned for the tubesheet drain hole analysis, conservatism is introduced by multiplying each fatigue pass by the bounding pro-rating factor for either of the transients forming that fatigue pass. Therefore, almost all fatigue passes were pro-rated by factors of 1.29 to 1.38 even if one of the transients was not impacted by the power uprate; namely Plant Heatup, Plant Cooldown, and the Pressure Tests. The resulting cumulative usage factor of 0.97 still satisfied the allowable usage factor of 1.0. The actual fatigue usage factor is expected to be much lower than the calculated value of 0.97.

Lower shell handholes and studs

Non-Power Uprate Analysis

Prior to the EPU, the stresses in the lower shell handholes were calculated from a 2D axi-symmetric finite element model of the lower handhole created using ANSYS that included the handhole forging, cover, bolting and a portion of the secondary shell. Equivalent properties were assigned to the studs, washers, nuts, and stud holes in the cover and forging to account for the fact that they were represented as axi-symmetric rings. The flexibility of the initial thread engagement at the first few threads between the stud/nut and stud/forging was accounted for by artificially lengthening the stud. This had the effect of reducing stud stresses since a longer, more flexible stud responds to given displacements imposed by the cover with lower stresses. The model was also assigned a shell radius approximately twice that of the actual radius to account for the fact that the axi-symmetric representation of the curved shell resulted in it being a sphere instead of a cylinder where longitudinal stresses are twice those in a sphere.

The thermal and pressure transients were considered in the same manner as described for the tubesheet blowdown holes, including the bounding scheme for the transients.

The most highly stressed components were found to be the studs. This was due to the fact that they were loaded when the cover lead or lagged the handhole forging in temperature or when it deformed due to the variations in internal pressure. The studs were also penalized in fatigue by the use of a SCF of 4.0 to account for the fact that they have threads. The cumulative usage factor was calculated to be 0.86 for a reduced life of 32 years.

Another highly stressed region was the handhole forging to shell juncture where a cumulative usage factor of 0.91 was calculated. The stresses in this region were calculated from the stresses in the lower shell at the tubesheet from the 2D axi-symmetric analysis of the tubesheet and primary head (see Tubesheet blowdown and (shell) drain holes for more details). The discontinuity stresses from the lower handhole model at the forging to shell juncture were then added to these stresses and an SCF of 2.0 was used to account for the fillet radius.

Power Uprate Analysis

To analyze the lower handhole for Power Uprate conditions, the finite element model of the lower handhole was re-created and the Power Uprate transients were applied to this model in the same methodology used for the original analysis. The new usage factor for the studs was higher and required the fatigue life to be reduced to 27 years. This fatigue life accounted for the fact that the first 9 years of plant operation was under the Non-Power Uprate conditions. The cumulative usage factor for the studs was 0.98. The fatigue analysis is conservative from an analytical standpoint and extensions to the operating life

of the studs can be achieved by performing fatigue tests in accordance with the ASME B&PV Code. Babcock & Wilcox Canada have performed such tests and have found that the fatigue life of studs can be as much as four times greater than that calculated analytically. This is due to manufacturing technique to make the threads since they are rolled threads and this reduces the concentration of stress.

At other locations in the lower handhole assembly the stresses and fatigue usage factors were slightly higher but comparable to those for Non-Power Uprate. However, at the forging to shell juncture, a lower fatigue usage factor was calculated for Power Uprate conditions due to the removal of a conservative assumption in the original analysis. In the fatigue pass table from the original analysis for this location, it was noted that the discontinuity stresses that were added represented the maximum range of stresses occurring across all transients. It was also noted that the highest fatigue pass corresponded to the Loading transient combined with the Unloading transient. Although the alternating stress for this pass was fairly small, this fatigue pass had the highest usage factor because of the large number of cycles prescribed for the Loading/Unloading transients. It was too conservative to add the maximum discontinuity stresses occurring across all transients to the fatigue pass for these two transients when considering Power Uprate conditions. This conservatism was removed and a substantial reduction in the fatigue usage factor was calculated. The cumulative usage factor was found to be 0.36 for Power Uprate conditions.

Primary Head at support

Non-Power Uprate Analysis

Prior to the EPU, the primary head at the support pas was analyzed using a 3D finite element model that was a half-symmetry representation of the primary and support pad. The model was conservative from a geometrical standpoint with smaller fillet radii between the pad and head than in reality in order to facilitate model creation. The model was created using the ANSYS finite element program. The fluid temperature ramps for the Level A and B transients were used as input to ANSYS to determine the metal temperature variation with time. Heat transfer coefficients were derived based on formulations for forced convection heat transfer based on flow velocities and the properties of water at the primary side temperatures.

Instead of evaluating all thermal transients, a bounding scheme was used whereby the less severe transients were omitted from the thermal evaluation and their cycles were assigned to the more severe transients during the fatigue evaluation. In this regard, only the Plant Heatup (200 cycles), Plant Cooldown (200 cycles), Plant Loading (14,500 cycles), and Plant Unloading (14,500 cycles) transients were individually evaluated. All other thermal transients (10% Step Increase, 10% Step Decrease , 50% Step Reduction, Reactor Trip, Loss of Flow, Loss of Power and Loss of Load) were conservatively lumped into two bounding transients having 2400 cycles and 600 cycles.

The thermal analysis results from ANSYS were reviewed to determine the appropriate times during the transients for subsequent analysis of total and linearized stress levels that include both thermal and pressure stresses. The critical times were chosen by monitoring component through thickness temperature differences, between components temperature differences, and skin temperature differences. The time-temperature histories of these differences were plotted and the times for which they reached extremes were tabulated. These times formed the basis upon which subsequent analysis of total and linearized stress levels were performed. The temperature distribution and the corresponding pressure at each critical time were used in ANSYS to determine the pressure plus thermal loading stresses in static analyses.

The Primary Side Pressure Tests (40 cycles) and Primary Side Leakage Tests (100 cycles) were also analyzed in static analyses.

Linearized and total stress intensities were obtained through various sections of the model using the ANSYS stress linearization option. These locations are referred to as Structural Class Lines (SCLs). In-house post-processing programs developed at Babcock & Wilcox Canada were used to calculate the linearized stress intensity ranges and fatigue usage factors for all SCLs.

External loading of the support pad from OBE earthquake, pressure, and thermal loading was considered by applying external forces and moments to the model in the worst possible combination of directions.

Since the support pads are adjacent to the primary nozzles, discontinuity stresses from the nozzle and the stresses from the loading of the nozzle were considered. These stresses were obtained from a 2D axi-symmetric finite element analysis of the primary nozzles. The stresses from the nozzles were obtained as stress intensities and these were directly added to the stress intensities in the support pad analysis. This is conservative since it ignores the directions of the stresses and any possible reductions in overall stress intensity by adding stresses on an individual component basis. For fatigue, the nozzle stresses were multiplied by a SCF of 1.5 to account for the presence of the fillet radius around the support pad.

The final stress intensity range results included the thermal and pressure transient stress plus the external load stresses plus the primary nozzle discontinuity and external load stresses. The maximum usage factor occurred on the outside surface of the primary head at the fillet radius between the support pad and head. The cumulative usage factor was 0.65 (NOTE: a typographical error in Table 2.2.2.2.5.2-1 of the EPULR lists this as 0.38).

<u>Power Uprate Analysis</u>

To re-calculate the fatigue usage factor for Power Uprate conditions, the original fatigue pass table was re-created and individual fatigue passes were pro-rated in the same manner as described above for the Power Uprate analysis of the tubesheet drain holes. As

mentioned for the tubesheet drain hole analysis, conservatism is introduced by multiplying each fatigue pass by the bounding pro-rating factor for either of the transients forming that fatigue pass. Therefore, almost all fatigue passes were pro-rated by factors of 1.10 to 1.53 even if one of the transients was not impacted by the power uprate; namely Plant Heatup, Plant Cooldown, and the Pressure Tests. The resulting cumulative usage factor of 0.998 still satisfied the allowable usage factor of 1.0.

Seal Skirt

Non-Power Uprate Analysis

Prior to the EPU, the stresses in the seal skit were analyzed using a 2D axi-symmetric finite element model created using ANSYS. The model included the seal skirt, steam drum shell, and secondary head. The fluid temperature ramps for the Level A and B transients were used as input to ANSYS to determine the metal temperature variation with time. Heat transfer coefficients were derived based on formulations for heat transfer in air during Plant Heatup and steam condensation during Plant Cooldown.

Instead of evaluating all thermal transients, a bounding scheme was used whereby the less severe transients were omitted from the thermal evaluation and their cycles were assigned to the more severe transients during the fatigue evaluation. In this regard, only the Plant Heatup (200 cycles), and Plant Cooldown (200 cycles) transients were individually evaluated. All other thermal transients (Plant Loading, Plant Unloading, 10% Step Increase, and 10% Step Decrease, 50% Step Reduction, Reactor Trip, Loss of Flow, Loss of Power and Loss of Load) were conservatively lumped into a single bounding transient having 17,500 cycles.

The thermal analysis results from ANSYS were reviewed to determine the appropriate times during the transients for subsequent analysis of total and linearized stress levels that include both thermal and pressure stresses. The critical times were chosen by monitoring component through thickness temperature differences, between components temperature differences, and skin temperature differences. The time-temperature histories of these differences were plotted and the times for which they reached extremes were tabulated. These times formed the basis upon which subsequent analysis of total and linearized stress levels were performed. The temperature distribution and the corresponding pressure at each critical time were used in ANSYS to determine the pressure plus thermal loading stresses in static analyses.

The pressure test transients were considered using a bounding scheme whereby the more severe Secondary Side Pressure Tests (40 cycles) were conservatively considered to represent the Secondary Leak Tests (200 cycles). Therefore, 240 cycles of the Secondary Side Pressure Tests were analyzed.

Linearized and total stress intensities were obtained through various sections of the model using the ANSYS stress linearization option. These locations are referred to as Structural Class Lines (SCLs). In-house post-processing programs developed at Babcock & Wilcox Canada were used to calculate the linearized stress intensity ranges and fatigue usage factors for all SCLs.

The seal skirt provides a seal between the top of the secondary separator deck and the surrounding steam drum shell. Therefore, it is loaded during periods of thermal mismatch between the internals and the shell. The highest stresses in the seal skirt occurred at the transition between the thin seal skirt cylinder to the thicker seal skirt forging due to the high bending moment there. The stress intensity range was 93.2 ksi (NOTE: a typographical error in Table 2.2.2.2.5.2-1 of the EPULR lists this as 95.0 ksi). This range was caused by the Plant Heatup and Plant Cooldown transients since temperature differences are greater following those transients than any other transient. The maximum fatigue usage factor occurred at the closest weld to the high stress location since a SCF of 2.0 was used per 1986 ASME B&PV Section III, NB-3352.2 for a Category B weld. The cumulative usage factor was 0.94.

Power Uprate Analysis

Since the transients causing the highest stress intensity range were Plant Heatup and Plant Cooldown and these are unchanged for the Power Uprate, no change in the stress intensity range was calculated. Although the other transients did change, it was found that, after pro-rating their stresses by appropriate pro-rating factors, they did not cause this stress range to increase. Therefore, the maximum stress intensity range was unchanged at 93.2 ksi.

To re-calculate the fatigue usage factor, it was recognized that the bounding scheme for the transients was very conservative. Although the Loading and Unloading transients would produce stresses in the seal skirt in the same manner as the Plant Heatup and Cooldown (i.e. through slow temperature ramps), the magnitude of these stresses are approximately 10% those of Heatup and Cooldown. Since this is small, lumping the high number of loading and unloading cycles with a bounding transient with much greater thermal loading is conservative. Therefore, the fatigue pass table from the original analysis was re-created except that the Loading/Unloading transient was removed from the bounding transient and assigned it's own fatigue pass. After pro-rating the alternating stresses for all passes to account for the Power Uprate and removing this conservatism, the cumulative usage factor was lower than the original value. The cumulative usage factor was 0.62.

Secondary manway studs

Non-Power Uprate Analysis

Prior to the EPU, the stresses in the secondary manway were calculated from a 2D axi-symmetric finite element model of the manway created using ANSYS that included the manway forging, cover, studs, washers, nuts and a portion of the secondary head. Equivalent properties were assigned to the studs, washers, nuts, and stud holes in the cover and forging to account for the fact that they were represented as axi-symmetric rings.

Instead of evaluating all thermal transients, a bounding scheme was used whereby the less severe transients were omitted from the thermal evaluation and their cycles were assigned to the more severe transients during the fatigue evaluation. In this regard, only the Plant Heatup (200 cycles), and Plant Cooldown (200 cycles), Plant Loading (14,500 cycles), and Plant Unloading (14,500 cycles) transients were individually evaluated. All other thermal transients (10% Step Increase, and 10% Step Decrease, 50% Step Reduction, Reactor Trip, Loss of Flow, Loss of Power and Loss of Load) were conservatively lumped into a single bounding transient having 3000 cycles. The Secondary Side Pressure Tests (40 cycles) and Secondary Leak Tests (200 cycles) were also considered in static analyses.

The remainder of the analysis was performed in the same manner as described for the lower shell handholes.

The most highly stressed components were found to be the studs. This was due to the fact that they were loaded when the cover lead or lagged the manway forging in temperature or when it deformed due to the variations in internal pressure. The studs were also penalized in fatigue by the use of a SCF of 4.0 to account for the fact that they have threads. The maximum stress range for the studs was calculated to be 82.4 ksi. Since this satisfied the 1986 ASME B&PV Section III, NB-3232 allowable of 2.7 Sm (84.8 ksi), a fatigue analysis was performed using the 2.7 Sm bolting curve from 1986 ASME B&PV Section III, Appendix I. The cumulative usage factor was calculated to be 0.67.

Power Uprate Analysis

The stresses in the secondary manway were re-calculated for the Power Uprate conditions by performing a benchmark study of the relative effect of the Power Uprate versus Non-Power Uprate transients on a similar bolted opening. The lower handhole finite element model was chosen for use in this study (see Lower Shell Handholes and Studs for more details about this model). Both the Power Uprate and Non-Power Uprate transients were applied to the lower shell handhole model. The same bounding scheme of transients selected in the original analysis of the secondary manway was used. The transient thermal

and pressure analysis was performed using the same methodology described previously.

Linearized and total stress intensities were obtained through various sections of the model using the ANSYS stress linearization option. In-house post-processing programs developed at Babcock & Wilcox Canada were used to calculate the linearized stress intensity ranges and fatigue usage factors for all SCLs. Two sets of results were obtained: Power Uprate results and Non-Power Uprate results. From a comparison of the linearized stress intensity and fatigue usage factors from the two sets of results, it was concluded that, for the studs, the Power Uprate transients produced stresses that were at most 4% more severe than those for Non-Power Uprate and fatigue usage factors that were at most 60% more severe than those for Non-Power Uprate. Multiplying the original stud maximum stress result by 4% gave 85.7 ksi. Since this exceeded the 2.7 Sm value (84.8 ksi) but satisfied the 3 Sm value (94.2 ksi), the original fatigue usage factor was re-calculated using the 3 Sm bolting curve from 1986 ASME B&PV Section III, Appendix I before increasing the result by 60% to account for the impact of the Power Uprate transients. The original cumulative usage factor was re-calculated to be 0.79. Multiplying this by 60% gave 1.262. Reducing the fatigue life to 31 years resulted in an acceptable cumulative usage factor of 0.98. It should be stated that this is conservative since it ignores the fact that the first 9 years of plant operation was under the Non-Power Uprate conditions.

10. The licensee provided the calculated stresses and fatigue usage factors for the reactor internal component in Table 2.2.3-3 of the Licensing Report. For several components, the stress intensity exceeds the 3Sm limit and a simplified elastic-plastic analysis was performed to calculate fatigue strength, as allowed by ASME Code, Section III, Subsection NB 3228.5. Provide a detailed summary of the evaluation for the following components: lower support plate, lower core plate, core barrel assembly outlet nozzle, thermal shield flexure bolts, and lower radial inserts.

Response

1.0 CORE BARREL ASSEMBLY

1.1 Upper Girth Weld Analysis

Summary of Load Conditions and Stresses

Load Condition	σ_r (psi)	σ_z (psi)	σ_y (psi)	Classification
Deadweight	-	-	[ ]a,c	P_m
CB Deflection	-	-	[ ]a,c	Q_b
Pressure Diff.	[ ]a,c	[ ]a,c	[ ]a,c	P_m
FIV	-	-	[ ]a,c	P_m
OBE	-	-	[ ]a,c	P_b
Thermal	-	[ ]a,c	[ ]a,c	Q

Summary of Fatigue Usage

Load Combination	S_a (ksi)	Total Cycles (Umbrella)	Allowable Cycles	Fatigue Usage
Mech. + Thermal	[ ]a,c	[ ]a,c	[ ]a,c	[ ]a,c

Notes:

1. Note that the girth welds are full-penetration, Type I welds as per ASME Code Table NG-3352-1; fatigue factor f = 1.
2. S_a is adjusted for temperature effects (E_c/E_h) for the S-N curve.

1.2 Lower Girth Weld

Summary of Load Conditions and Stresses

Load Condition	σ_r (psi)	σ_z (psi)	σ_y (psi)	Classification
Deadweight	-	-	[ ]a,c	P_m
CB Deflection	-	-	[ ]a,c	Q_b
Pressure Diff.	[ ]a,c	[ ]a,c	[ ]a,c	P_m
FIV	-	-	[ ]a,c	P_m
OBE	-	-	[ ]a,c	P_b
Thermal	-	[ ]a,c	[ ]a,c	Q

Summary of Fatigue Usage

Load Combination	S_a (ksi)	Total Cycles (Umbrella)	Allowable Cycles	Fatigue Usage
Mech. + Thermal	[ ]a,c	[ ]a,c	[ ]a,c	[ ]a,c

Notes:

1. Note that the girth welds are full-penetration, Type I welds as per ASME Code Table NG-3352-1; fatigue factor f = 1.
2. S_a is adjusted for temperature effects (E_c/E_h) for the S-N curve.

1.3 Core Barrel Outlet Nozzle

From the detailed finite element model, thermal and mechanical stress components for all the applicable transients at the critical section of the nozzle weldment were calculated. The stress range and alternating stress for each load combination are given below.

Transient			Cycles Available								Cycles Remaining			
J	K	I	J	K	I	S_R (ksi)	S_a (1) (ksi)	N(2)	n		J	K	I	$U_i = n/N$
OBE	UU	UD	[ ]a,c			[ ]a,c	[ ]a,c	[ ]a,c	[ ]a,c		[ ]a,c			[ ]a,c
	UU	UD	[ ]a,c			[ ]a,c	[ ]a,c	[ ]a,c	[ ]a,c		[ ]a,c			[ ]a,c
	NU	UD	[ ]a,c			[ ]a,c	[ ]a,c	[ ]a,c	[ ]a,c		[ ]a,c			[ ]a,c
	NU	RCS	[ ]a,c			[ ]a,c	[ ]a,c	[ ]a,c	[ ]a,c		[ ]a,c			[ ]a,c
	NU	Ex. FW	[ ]a,c			[ ]a,c	[ ]a,c	[ ]a,c	[ ]a,c		[ ]a,c			[ ]a,c
	Turb.	NU	[ ]a,c			[ ]a,c	[ ]a,c	[ ]a,c	[ ]a,c		[ ]a,c			[ ]a,c
	Heat Up	NU	[ ]a,c			[ ]a,c	[ ]a,c	[ ]a,c	[ ]a,c		[ ]a,c			[ ]a,c
	NU	ND	[ ]a,c			[ ]a,c	[ ]a,c	[ ]a,c	[ ]a,c		[ ]a,c			[ ]a,c

Total usage factor [ ]a,c

Notes:

Transients are defined as: UU = Upset Up; UD = Upset Down; NU = Normal Up; ND = Normal Down; Turb. = Turbine Roll; Ex. FW = Excessive Feedwater Flow; RCS = Inadvertent RCS Depressurization

1. $S_a = ½ K_e f S_R (E_c/E)$; f = 4.0, $(E_c/E) = 26.0/25.4$, $K_e = 1.343$

2. From Figure I-9.2 of ASME Code.

3. Including all other transients not calculated here.

2.0 THERMAL SHIELD FLEXURES

Summary of Stresses

Load Condition	Stress (ksi)			
	$P_m + P_b$	Q	$P_m + P_b + Q$	$(\sigma)_{peak}$
FIV + OBE	[ ]a,c	-	-	-
Thermal	-	[ ]a,c	[ ]a,c	-
FIV + OBE + Thermal	-	-	[ ]a,c	[ ]a,c
FIV + Thermal	-	-	-	[ ]a,c

Summary of Fatigue Usage Factor

Combination	Combination Description	S_a (ksi)	N	n	$U_i = n/N$
1	FIV + OBE + Thermal	[ ]a,c	[ ]a,c	[ ]a,c	[ ]a,c
2	FIV + Thermal	[ ]a,c	[ ]a,c	[ ]a,c	[ ]a,c

Thus, total fatigue usage factor = [ ]a,c

Notes:

1. $S_a = ½ K_e (\sigma)_{peak} (E_c/E)$; $(E_c/E) = 26.0.0/25.4$, $K_e = 2.665$
2. $S_a = ½ K_e (\sigma)_{peak} (E_c/E)$; $(E_c/E) = 26.0.0/25.4$, $K_e = 1.450$

3.0 LOWER SUPPORT PLATE

From the detailed finite element model, thermal and mechanical stress components for all the applicable transients were calculated. The stress range and alternating stress for each load combination are given below.

Summary of Stress and Fatigue Usage Factor

Combination Number	Combination Description	$(\sigma)_{peak}$ (ksi)	$S_a^{(1)}$ (ksi)	N	n	$U_i = n/N$
1	Ex. FW, FIV, UU, OBE, Mech.	[ ]^{a,c}	[ ]^{a,c}	[ ]^{a,c}	[ ]^{a,c}	[ ]^{a,c}
2	Refueling, OBE, UP, Mech.	[ ]^{a,c}	[ ]^{a,c}	[ ]^{a,c}	[ ]^{a,c}	[ ]^{a,c}

Total fatigue usage [ ]^{a,c}

Notes:

1. $S_a = ½ (\sigma)_{peak} (E_c/E)$; $(E_c/E) = 26.0.0/25.4$

2. For conservatism, all other remaining cycles including that of load-follow transients are considered.

The transients are defined as: Ex. FW = Excessive Feedwater; FIV = Flow-Induced Vibrations; UU = Upset Up; OBE = Operating Basis Earthquake

4.0 LOWER RADIAL RESTRAINTS

From the detailed finite element model, thermal and mechanical stress components for all the applicable transients were calculated. The stress range and alternating stress for each load combination are given below.

Summary of Stress and Fatigue Usage Factor

Combination Number	Combination Description	$S_a^{(1)}$ (ksi)	N	n	$U_i = n/N$
1	Refueling, Turb., Ex. FW, UU, OBE	[ ]^{a,c}	[ ]^{a,c}	[ ]^{a,c}	[ ]^{a,c}
2	UD, ND, OBE	[ ]^{a,c}	[ ]^{a,c}	[ ]^{a,c}	[ ]^{a,c}
3	UD, ND, NU, OBE, Friction	[ ]^{a,c}	[ ]^{a,c}	[ ]^{a,c}	[ ]^{a,c}
4	UP, ND, NU, Friction, OBE	[ ]^{a,c}	[ ]^{a,c}	[ ]^{a,c}	[ ]^{a,c}

Total fatigue usage factor [ ]^{a,c}

Note:

1. $S_a = ½ (\sigma)_{peak} (E_c/E)$; $(E_c/E) = 26.0.0/25.4$

5.0 LOWER CORE PLATE

Summary of Peak Stress, Load Combination, and Number of Cycles

Combination Number	Combination Description	Peak Stress (ksi)	Cycles
1	Mech. + ST – Zero Load	[ ]a,c	[ ]a,c
2	ST – Zero Load	[ ]a,c	[ ]a,c
3	LT(OP18%) – Zero Load	[ ]a,c	[ ]a,c
4	LT(OP12%) – Zero Load	[ ]a,c	[ ]a,c
5	LT – Zero Load	[ ]a,c	[ ]a,c

Summary of Usage Factors

Combination Number	Actual Cycles	S_a (ksi)	Allowable Cycles	Usage Factor
1	[ ]a,c	[ ]a,c	[ ]a,c	[ ]a,c
2	[ ]a,c	[ ]a,c	[ ]a,c	[ ]a,c
3	[ ]a,c	[ ]a,c	[ ]a,c	[ ]a,c
4	[ ]a,c	[ ]a,c	[ ]a,c	[ ]a,c
5	[ ]a,c	[ ]a,c	[ ]a,c	[ ]a,c
Total				[ ]a,c

Notes:

1. "Mech." indicates stresses from mechanical loads.
2. "ST" indicates stresses from short term heat generation rates.
3. "LT" indicates stresses from long term heat generation rates.
4. "OP" indicates over power condition.
5. S_a includes temperature effects for S-N curve.

11. On Page 2.2.4-10 of the Licensing Report, the licensee stated that "[d]ue to the increase in main feedwater system flow at EPU conditions, a modification to the main feedwater regulating valves to allow for proper flow control of these valves will be implemented (refer to LR Section 2.5.5.4. Condensate and Feedwater). The EPU does not affect the Technical Specification (TS) requirement for these valves to close in less than or equal to 10 seconds. The design specification associated with the main feedwater regulating valve modification includes the requirement that the modified valves close in less than or equal to 10 seconds. Any required changes to inservice Testing Program requirements for the modified main feedwater regulating valves will be developed as part of the plant change process." Provide a more detailed discussion of the required changes to the inservice testing program requirements for the proposed modification.

Response

The only change required will be a rebaseline of the main and bypass feed regulating valves reference, action, and limiting values for stoke time CLOSED, the Ginna IST program direction of concern for these four valves. This is not a requirement change to the IST program. It is merely an update to the associated program document which tracks all IST program power-operated valve current stroke times. In addition, the surveillance test procedure which measures the actual stroke time of each of the four valves to ensure they are in compliance with the Technical Specification limit of less than or equal to 10 seconds, will need to be revised to reflect any newly calculated administrative limits on stroke time.

The affected procedures will be revised before resuming power operation following RFO 2006. The current procedure revisions will continue to be used for periodic or forced outage surveillance tests between now and then. Thus the program will not be revised until the plant is brought below the Mode of applicability for the main feed water system for EPU related equipment modifications.

12. On Page 2.2.4-11, the licensee stated that "[t]he required standby auxiliary accident analysis flow rate will increase from 200 gprn at current conditions to 235 gpm at EPU conditions. The Inservice Testing program analysis/procedures for the standby auxiliary feedwater pumps will be revised to address testing the standby auxiliary feedwater pumps at EPU conditions." Discuss the changes in program analysis and procedures that are likely to occur as a result of the proposed modification. Indicate when the modification would be available for review by the NRC staff.

Response

The IST program implementing procedure and the associated standby auxiliary feed water (SBAFW) pump surveillance test procedures will be revised to reflect the new accident analysis flow rate of 235 gpm as well as the new pump performance reference and required action limit values when initially established at the new flow rate.

The existing Ginna pump performance analysis will be evaluated and revised as deemed appropriate to determine the minimum required differential test pressure performance at the new accident mitigation flow rate of 235 gpm. Any effects on pump performance that may result due to plant uprate changes in RCS Tavg, loop delta T's, Steam Generator pressure and required SBAFW accident mitigation flow, will be accounted for as part of the performance analysis evaluation.

The affected procedures will be revised before resuming power operation following RFO 2006. The current procedure revisions will continue to be used for periodic or forced outage surveillance tests between now and then and can not be revised until the plant is below the Mode of applicability for the standby auxiliary feed water system for EPU related equipment modifications.

13. On Page 2.2.4-11, the licensee stated that, "[a]s addressed in the design analysis which determines check valve safeguards flow rates, the check valves in the standby auxiliary feedwater pump suction and discharge lines have an open position safety function to pass 200 gallons per minute (gpm) from the standby auxiliary feedwater pumps to the steam generators. The Inservice Testing program analysis / procedures for the standby auxiliary feedwater pump suction and discharge check valves will be required to be revised to address testing the standby auxiliary feedwater pump suction and discharge check valves at EPU flow conditions." Discuss more specifically what revisions in the standby auxiliary feedwater pump suction and discharge check valves testing program are likely to occur as a result of operation at EPU conditions. Also, indicate when these proposed revisions would be available for staff review and approval.

Response

The IST program document which contains all required program check valve full-flow rates will be revised to reflect the new accident mitigation flow rate of 235 gpm as the acceptance criteria for all applicable suction and discharge check valves associated with the C and D standby auxiliary feed water pumps. Testing at the new 235 gpm accident mitigating flow rate will be performed to ensure that the check valve is capable of opening sufficiently to ensure passage of that flow rate during quarterly SBAFW pump testing. The surveillance test procedures for the C and D standby auxiliary feed water pumps will be revised to reflect the new full-flow rate value of 235 gpm.

The affected procedures will be revised before resuming power operation following RFO 2006. The current procedure revisions will continue to be used for periodic or forced outage surveillance tests between now and then and can not be revised until the plant is below the Mode of applicability for the standby auxiliary feed water system for EPU related equipment modifications. The detailed IST program changes are maintained internally, but are always available for NRC review and audit on site.

14. On Page 2.2.4-11, the licensee stated that the Inservice Testing analysis and procedures for the standby auxiliary feedwater (AFW) pumps and their suction and discharge check valves will need to be revised to reflect EPU conditions. Discuss the change in operating conditions for these components from original licensed thermal power (OLTP) to EPU power levels, and the status of the completion of the revision to the 1ST analysis and procedures.

Response

The IST program document which contains all required program check valve full-flow rates will be revised to reflect the new accident mitigation flow rate of 235 gpm as the

acceptance criteria for all applicable suction and discharge check valves associated with the C and D standby auxiliary feed water pumps. Any effects on pump and associated in-line check valve performance that may result due to plant uprate changes in RCS Tavg, loop delta T's, Steam Generator pressure and required SBAFW accident mitigation flow, will be accounted for as part of the pump performance analysis evaluation. During quarterly SBAFW pump and check valve testing the accident flow delivery function of these components will be verified as being acceptable. The surveillance test procedures for the C and D standby auxiliary feed water pumps, will be revised to reflect the new full-flow rate value of 235 gpm.

The affected procedures will be revised before resuming power operation following RFO 2006. The current procedure revisions will continue to be used for periodic or forced outage surveillance tests between now and then and can not be revised until the plant is below the Mode of applicability for the standby auxiliary feed water system for EPU related equipment modifications.

15. In Table 2.2.4-2 of the Licensing Report, the licensee stated that residual heat removal (RHR) cross-connect pump section motor-operated valves (MOVs) 704A and B have certain performance parameters calculated for EPU conditions. Discuss the impact of these parameters on the capability of MOV5 704A and B to perform their safety functions under EPU conditions.

Response

The only parameter that changes for these MOVs as a result of EPU is the upstream pressure during closing. This pressure is based on a maximum containment pressure at switchover to sump recirculation and maximum containment water level. Containment post-LOCA pressure/temperature response changes as a result of EPU. Maximum containment water level does not change. The sources of water into containment are essentially unaffected by EPU (RWST volume, Accumulator water volume, RCS volume, and Containment physical dimensions have negligible changes due to EPU). EPU does change the containment pressure at switchover to sump recirculation. The containment pressure is calculated to increase from 38 psia to 54 psia. Therefore the closing pressure has increased by = 16 psi. This is well within the margins available for the MOVs to perform their safety functions under EPU conditions.

16. In Section 2.2.4, the licensee discussed the potential impact of EPU conditions on the performance of safety-related MOVs at Ginna. Discuss, with examples, the potential impact of EPU conditions on other safety-related power-operated valves at Ginna (such as air-operated and solenoid-operated valves).

Response

Ginna has in place an Air Operated Valve (AOV) Program for testing, inspection and maintenance of valve air operators. The Ginna AOV program is consistent with the

"Joint Owners Group Air Operated Valve Program". Per the AOV Program, valves are categorized as follows:

- Category 1: AOVs that are safety-related with respect to flow control, are active, and have high risk significance.
- Category 2SR: AOVs that are safety-related with respect to flow control, are active, and do not have high risk significance.
- Category 2NS: AOVs that are nonsafety-related with respect to flow control, are active, and have high risk significance.
- Category 3: AOVs that are passive, have high risk significance, and increasing system pressure unseats valves.

Ginna has a design analysis document that provides the process for identifying and categorizing the equipment that is included in the AOV Program. This document identifies Category 1 and Category 2SR AOVs. There are currently no AOVs which meet the screening requirements for Category 2NS or Category 3 AOVs.

The Reactor Coolant System Pressurizer PORVs (AOVs 430 & 431C) and Chemical & Volume Control System RCP Seal Outlet Valves (AOVs 270A & 270B) are the only valves designated as Category 1 safety-related AOVs. The operating parameters that affect the maximum expected differential pressure across the valves are not impacted by the EPU. Therefore, the Category 1 AOVs are not impacted by the EPU.

The remaining safety related AOVs are categorized as Category 2SR. Licensing Report Section 2.2.4 "Safety Related Valves and Pumps" evaluates the impact of the EPU, by system, on safety related valves. The valves discussed included both MOVs and AOVs. The following identifies the Category 2SR AOVs that are discussed.

- Main Steam Isolation Valves
- Main Steam Atmospheric Relief Valves
- Main Feedwater Regulating Valves
- Main Feedwater Bypass Valves
- Main Feedwater Isolation Valves
- Safety Related Valves in the NSSS Systems

Except for the valves being modified, the results of the evaluations demonstrate that the EPU does not affect the AOVs. Note that the existing manual main feedwater isolation valve which will be modified to incorporate an automatic operator will be included in the AOV program as part of the plant change process.

Since the safety-related AOVs are not impacted by the EPU, solenoid-operated valves that provide controls for the AOVs are also not impacted.

17. Discuss whether any safety valves or safety relief valves might need to operate with liquid flow to perform their safety functions following EPU implementation, and the justification for such reliance on those valves to perform their safety functions.

Response

The only non-LOCA analysis which assumes pressurizer power operated relief valves (PORVs) or pressurizer safety valves (PSVs) operate with liquid flow is the Feedwater Line Break (FWLB) Analysis. The acceptance criteria for a FWLB analysis is that the core remain covered and geometrically intact. In order to conservatively meet this acceptance criteria, Westinghouse has adopted the criterion that there is no bulk boiling in the hot leg prior to the time when the heat removal capability of the intact steam generator exceeds the heat generation. Modeling the PORVs and the PSVs for this event reduces the pressure in the primary which reduces the saturation temperature in the primary which reduces the margin to boiling. As such, the PORVs and PSVs are assumed to operate with liquid flow in the FWLB analysis in order to obtain more conservative results. The PORVs and PSVs are not assumed to limit pressure under liquid flow conditions for the purpose of demonstrating that overpressurization does not occur for any non-LOCA event. It should be noted that FWLB analyses are not performed to demonstrate that primary pressure limits are met because the FWLB event is bounded by the Loss of Load/Turbine Trip (LOL/TT) event in terms of overpressurization.

The Ginna PSVs were evaluated for liquid discharge following a feedwater line break as part of the Ginna response to Item II.D.1 of NUREG-0737. As discussed in the NRC SER (dated 8-20-1987) that closed out Item II.D.1, PSVs similar to the Ginna PSVs were successfully tested for liquid temperature that were close to the bounding temperature for the Ginna feedwater line break. The SER concluded that the PSVs would operate in a stable manner under the various fluid conditions that it would be exposed. Since the fluid conditions for the feedwater line break at EPU are similar to those for the existing power level, the PSVs would still operate at EPU conditions to limit RCS over-pressurization.

18. In Section 2.5.5.4 of the Licensing Report, the licensee discussed the evaluation of the feedwater and condensate systems and components for EPU conditions. Discuss the evaluation of potential adverse flow effects, such as flow-induced vibration, on the feedwater and condensate piping and components (including sample probes) as a result of EPU operation.

Response

The feedwater and condensate systems (i.e., piping and components) were evaluated for the EPU conditions in Licensing Report Section 2.5.5.4 "Condensate and Feedwater." The feedwater and condensate components were acceptable for the EPU conditions. Flow velocities through the condensate and feedwater system were calculated at current and EPU conditions. The flow velocities in the main piping flow paths increased approximately 17% primarily due to the increased flow to the steam generators required by the EPU power level. Flow rates in piping branches to auxiliary components generally were affected to a much lesser degree since the EPU did not significantly affect the service requirements for these components. For piping, EPU velocities remain below the industry standard guidelines for most services although there are some pipes whose

velocities exceed the guidelines. These individual pipes are evaluated as part of the erosion / corrosion program as described in Licensing Report Section Number 2.1.8, "Flow Accelerated Corrosion."

For feedwater and condensate components, such as the feedwater heaters, the increased flow velocities in the tubes and shell were evaluated against the industry standards, such as HEI, which govern the design of these components. Although nozzle velocities for some feedwater heaters exceeded HEI recommended values, in all cases, the existing designs were judged acceptable. All nozzles which exceeded HEI recommended values have been included in the Flow Accelerated Corrosion Program for long term monitoring as discussed in Licensing Report Section number 2.1.8. Similar to the feedwater nozzles, the erosion / corrosion effects on the internal subcomponents, such as feedwater heater tubes, were evaluated as part of the Flow Accelerated Corrosion Program. See Licensing Report Section Number 2.1.8 for a discussion of the monitoring program.

A vibration monitoring program is being established to ensure that any steady state flow induced piping vibration following EPU implementation are not detrimental to the plant, piping, pipe supports or connected equipment. Refer to Licensing Report Section 2.12.1.2.3.4 "Vibration Monitoring" for discussion of the program.

Ginna does not have sample probes in either the Condensate or Feedwater Systems which extend into the flow stream. Flow measuring devices in these systems include Leading Edge Flow Transducer (feedwater only), orifice plates and flow nozzles. None of these devices have probes which extend into the flow stream.

Thermowells do extend into the flow stream and are used throughout the Condensate and Feedwater Systems for temperature measurement. However, maximum piping velocities for all thermowells are less than 26 fps at current and uprate conditions. These EPU piping velocities are bounded by the maximum velocities which thermowells are designed.

19. In Table 2.12-1, the licensee listed vibration monitoring to be conducted at 85, 88, 91, 94, 97, and 100% of EPU power level as part of the Ginna EPU Power Ascension Test Plan. Discuss the activities to be performed during these hold points, including: (a) vibration monitoring of the reactor, steam, feedwater, and condensate systems and components, and (b) plant walkdowns and inspections of plant systems and equipment. Discuss the acceptance criteria to be applied to the vibration data, walkdowns, and inspections and the actions to be taken if the acceptance criteria are not satisfied.

Response

Please refer to the response to RAI question 4.

20. As referenced in Section 2.2.2.1.5.4, "Tube Vibration," the Ginna SG tubes were evaluated by calculating the most limiting fluid-elastic stability ratio and the maximum

turbulent induced bending stresses on the limiting tube. Provide a summary of evaluation regarding the vortex induced vibration stresses on the limiting SG tubes for the EPU condition.

Response

Based on empirical data, vortex-shedding resonance is assumed to be possible only in single-phase flow and only for the tubes near the bundle periphery or near the tube-free lane. The vortex shedding resonance has never been observed to occur in two-phase flow. The periodic wake shedding is generally not a problem in two-phase flow except at very low void fraction (Ref. 1). It is considered as a potential FIV mechanism only for the bundle entrance region. This means that no vortex shedding amplitude is required to be evaluated at the U-bend region.

Periodic wake shedding resonance may be a concern in liquid cross flow where the flow is relatively uniform. It is not normally a problem at the entrance region of steam generators because the flow is very non-uniform and quite turbulent.

To calculate the tube vibration amplitude at a possible vortex shedding resonance, the EasyFIV computer code assumes a vortex shedding frequency equal to each tube natural frequency and then calculates the corresponding tube vibration amplitude. The EasyFIV results show that the maximum vibration amplitude at the vortex shedding resonance is 0.016342in and this occurs at the midpoint of the tube first span above the tubesheet. It is noted that the acceptance criteria for maximum vortex shedding amplitude is 3% of tube outer diameter (15mils), Reference 1, page 498. The maximum vortex shedding amplitude of 16.34mils has been justified in Reference 2.

To calculate the induced stress in the tube due to vortex shedding resonance, a tube is represented as a single span beam fixed at one end, that represents the clamped boundary condition at the face of tubesheet, and pinned-axially free at the other end, which represents the tube boundary condition at the first tube support plate. The pinned-axially free allows the tube to rotate about any axis and constrains the in-plane translation but permits the tube to move in its own axial direction. The tube is loaded in such a way that results in the same deflection at its mid-span, and then the maximum bending stress occurring in the tube due to applied load is determined.

However, it is seen that a vibration amplitude of 0.016342in (even if the vortex shedding resonance occurs) results in a very low bending stress in the tube.

Table 1 lists the stress level and the stress amplitude along with the corresponding stress from the fatigue curve.

Table 1: Stress level of the tube due to the vortex shedding resonance (1.968×10^{11})

Tube Frequency (Hz) [2]	Number of Cycles over 40 Years	Maximum Vortex Shedding Amplitude (rms mils) [2]	Stress Level (Induced Stress due to VS Resonance) (ksi)	Stress Amplitude(1) in the Tube	Code Design Stress for the Vibration Cycles (Fatigue Curve) [3]
156.028	1.968×10^{11}	16.342	6.705	3.353	23.7

1. The induced stress in the tube due to vortex shedding resonance is adjusted using the elasticity modulus of the fatigue curve (Ref. 3)

References

1. M. J. Pettigrew and C.E. Taylor, "Vibration analysis of shell-and-tube heat exchangers: an overview: Part-2: vibration response, fretting-wear, guidelines", Journal of Fluids and Structures, 18 (2003), pp. 485-500.
2. BWC Report, 143O-FIV-01, Rev. 01, "R.E. Ginna Nuclear Power Plant: Flow-Induced Vibration and Wear Analysis of Replacement Steam Generators at Power Uprate Conditions", May 2005.
4. ASME Boiler and Pressure Vessel Code, Section IID, 1989 Edition

21. As referenced in Section 2.2.2.5, provide a summary of the evaluation for the SG internals (baffle, feedwater sparger, steam dryer, flow reflector, tubes) and their supports with respect to the maximum stress and fatigue usage factor for the EPU condition. Also, identify the Code, and Code edition for the evaluation of the proposed EPU. If different from the Code of record, provide the justification. Also, provide an evaluation of flow induced vibration of the steam dryer, dryer supports and flow-reflector with respect to the fluid-elastic instability, acoustic loads and vortex shedding due to steam flow for the EPU.

Response

Summary of the evaluation for the SG internals and their supports for the EPU condition
Non-Power Uprate Analyses of SG Internals other than U-tubes and Feedwater Header

Except for the U-tubes, the SG internal components are not governed by the ASME B&PV Code since these components are not pressure boundary. However, the ASME Code Section III was adopted as a guideline for performing the structural analysis of the steam generator internal structures.

The loading considered for the internals was classified into two categories: Design loading included differential pressure and differential thermal expansion loads during operating conditions (Level A and B) together with OBE loads and deadweight. This loading also bounded Level C condition loading. Level D loading included accident loads due to pipe rupture/LOCA, SSE and deadweight.

The SG internals were analyzed using finite element and classical analysis techniques. Finite element models of the U-tubes and their supports, steam separator assemblies, feedwater header assembly, and steam outlet nozzle flow restrictor were created using ANSYS 3D beam and shell elements. These models were used to determine thermal expansion stresses from imposed thermal conditions, deadweight stresses from an imposed body acceleration load of 1G, flow and burst pipe stresses from applied surface and line loads, OBE and SSE stresses from response spectrum analyses, and LOCA stresses from applied loading that represents U-tube loading of supports.

The resulting primary stresses were compared with allowables that were based on the 1986 ASME B&PV Code acceptance criteria for Design and Level D conditions.

Power Uprate Analysis of SG Internals other than U-tubes and Feedwater Header

Only the differential pressures occurring during normal operation were affected by the Power Uprate conditions. The original analyses for the SG internals were reviewed to determine the impact of these increased pressure differentials. Most components were not significantly loaded by pressure differentials and their stresses were unchanged. However, the tube support lattice grids, shroud lug to shroud weld, and primary and

secondary decks were affected by the Power Uprate since their large surface areas are oriented towards the direction of flow loading or, in the case of the shroud lug welds, connect these components to the shell. The stresses for these components are listed in Table 1 for Power Uprate and Non-Power Uprate. All stresses remain below the corresponding allowables.

Table 1 - SG Internals Affected by EPU

Component	Load Condition	Stress Category	Pre-EPU Stress (ksi)	EPU Stress (ksi)	Allow. Stress	Comments
SG Internal Components						
Span Breaker Bar	Design	Pm Pm + Pb	0 12.6	0 16.3	28.4 42.7	
Peanut Bolt	Design	Pm Pm + Pb	0.7 0.7	0.9 0.9	24.2 36.3	
Tube Free Lane Bar	Design	Pm Pm + Pb	0.0 10.5	0 12.1	19.5 29.2	
Tube Free Lane Bolt	Design	Pm Pm + Pb	8.8 8.8	11.0 11.0	24.2 36.3	
Support Ring	Design	Pm Pm + Pb	6.0 9.3	7.1 10.6	19.5 29.2	
Shroud Lug Weld to Shroud	Design	Pm Pm + Pb	11.7 11.7	11.8 11.8	12.7 19.0	
Secondary Deck Stiffener	Design	Pm Pm + Pb	0.0 7.7	0.8 9.3	19.5 29.3	
Secondary Deck Panel	Design	Pm Pm + Pb	0.0 3.7	0.7 4.4	19.5 29.3	
Secondary Deck Stiffener Weld	Design	Pm Pm + Pb	3.9 3.9	4.3 4.3	9.8 14.6	
Primary Deck Access Door	Design	Pm Pm + Pb	0.0 4.8	0.2 6.6	19.5 49.0	
Secondary Deck Access Door	Design	Pm Pm + Pb	0.0 3.4	0.1 4.3	19.5 49.0	

Non-Power Uprate Analysis of Feedwater Header

The feedwater distribution header assembly is the most critical component for fatigue considerations since it is subjected to large temperature gradients during periods of rapid feedwater temperature changes. Because of this, it was the only component amongst the SG internals that was evaluated for fatigue. The loading considered was the Level A and B thermal transients and OBE loading. The header and J-tubes were analyzed using finite element analysis with 2D axi-symmetric models. A model of a straight section of pipe was used to derive stresses in the header tee, elbows and reducers by the use of stress indices for these components given in 1986 ASME B&PV Code Section III, NB-3600. Heat transfer coefficients were derived based on formulations for forced convection, natural convection and a combination of the two using the velocities and properties of the feedwater.

The thermal analysis results from ANSYS were reviewed to determine the appropriate times during the transients for subsequent analysis of total and linearized stress levels that include both thermal and pressure stresses. The critical times were chosen by monitoring component through thickness temperature differences, between components temperature differences, and skin temperature differences. The time-temperature histories of these differences were plotted and the times for which they reached extremes were tabulated. These times formed the basis upon which subsequent analysis of total and linearized stress levels were performed. The temperature distributions at each critical time were used in ANSYS to determine the thermal loading stresses in static analyses.

Linearized and total stress intensities were obtained through various sections of the model using the ANSYS stress linearization option. These locations are referred to as Structural Class Lines (SCLs). In-house post-processing programs developed at Babcock & Wilcox Canada were used to calculate the linearized stress intensity ranges and fatigue usage factors for all SCLs. OBE stresses were added to these stresses to determine the overall stress. The maximum stress intensity range of 69.89 ksi and the maximum cumulative usage factor of 0.80 occurred in the J-tubes. The transients forming the range of stress intensity were the Heatup/Cooldown and 50% Step Reduction.

Power Uprate Analysis of Feedwater Header

Since the transients causing the highest stress intensity range were Plant Heatup/Cooldown and 50% Step Reduction and these are unchanged for the Power Uprate for feedwater temperature, no change in the stress intensity range was calculated. Only the Loading/Unloading and 10% Step Increase/Decrease transients were found to have a greater range of feedwater temperature for Power Uprate when compared with Non-Power Uprate. After pro-rating the stresses for these transients by appropriate pro-rating factors, they did not cause this stress range to increase. Therefore, the maximum stress intensity range was unchanged at 68.89 ksi.

To re-calculate the fatigue usage factor for Power Uprate conditions, the original fatigue pass table was re-created and individual fatigue passes were pro-rated in the same manner as described above (see B&W Response to RAI # 9 for the Power Uprate analysis of the tubesheet drain holes). Conservatism is introduced by multiplying each fatigue pass by the bounding pro-rating factor for either of the transients forming that fatigue pass. The resulting cumulative usage factor of 0.85 still satisfied the allowable usage factor of 1.0.

The same pro-rating procedure was applied for all classlines in the original feedwater header analysis. It was found that the maximum cumulative usage factor was 0.93 and it occurred in the header itself.

Non-Power Uprate Analysis of U-tubes

The U-tubes are pressure boundary components. Therefore, their evaluation was governed by the 1986 ASME B&PV Code Section III, NB-3200. The U-tubes were analyzed using both finite element and classical methods. Finite element models using 3D beam elements were used to determine deadweight stresses in the U-tubes from the U-bend support assembly, stresses from OBE and SSE response spectrum loading, and stresses from LOCA loading. Finite element models using 3D beam elements were also used to derive formulations for the stresses in the U-tubes versus temperature caused by differential temperatures from the hot to cold legs, and stresses versus temperature caused by the differential thermal growth of the lattice grids and tubesheet. Classical analysis was used to derive formulations for stresses versus temperature caused by thermal transient gradients through the tube wall thickness, stresses versus pressure caused by differentials in pressure between the primary and secondary sides of the SG, and stresses versus temperature and pressure caused by the restraint of a tube in a tubesheet hole.

The temperature and pressure excursions during all thermal and pressure transients were determined and stresses were calculated and combined with the deadweight, OBE, SSE, and LOCA stress in various combinations to derive overall stresses for Design, Level A, B, C and D conditions.

For Level A&B conditions, the maximum stress intensity range was 73.6 ksi and it occurred at the inside surface of a U-tube where it made contact with the tubesheet. This maximum range was caused by the Primary Side Leak Test and the Secondary Side Pressure Test. The fatigue usage factor was negligibly small.

Power Uprate Analysis of U-tubes

Since the transients causing the highest stress intensity range were the Primary Side Leakage Test and Secondary Side Pressure Test and these are unchanged for the Power Uprate, no change in the maximum stress intensity range was calculated. Changes to the other transients did not cause this stress range to increase. Therefore, the maximum stress intensity range was unchanged at 73.6 ksi.

Since the impact on the Power Uprate on the stresses was considered to be small and the original usage factor was negligible, it was considered that the new usage factor would also be negligible.

Flow induced vibration of the steam dryer, dryer supports and flow-reflector

Flow induced vibration of the steam dryer, dryer supports and flow-reflectors is not an issue in B&W Canada (BWC) supplied steam generators that utilize Curved Arm (CAP) primary steam separators. Flow reflectors are not used in BWC supplied steam generators. Table 2 lists the plants utilizing CAP separators. None of these plants have reported signs of fatigue or flow induced vibration in any of the SG internals or supports.

Table 2 – BWC Steam Generators with CAP Type Steam Separators

Plant Name	No. of Steam Generators	Plant Name	No. of Steam Generators
Darlington 1-4 (Canada)	16	Millstone 2	2
Cernavoda 1, 2 (Romania)	8	McGuire 1, 2	8
Wolsong 2, 3, 4 (Korea)	12	Catawba 1	4
Qinshan 1,2 (China)	8	R. E. Ginna	2
		St. Lucie 1	2
		Braidwood 1	4
		Byron 1	4
		D. C. Cook 1	4
		Calvert Cliffs 1, 2	4
Total CANDU RSGs	44	Total PWR RSGs	34
TOTAL 78			

The CAP primary separators used in the R. E. Ginna RSG's consist of three main components, the riser tube, curved arm separator head and a return cylinder.

The primary separators are supported at the lower end of the riser tube by the primary deck, which forms the top of the tube bundle region. The return cylinder is welded directly to the riser tube via two guide plates at the lower end. Two sets of four alignment bolts keep the riser tube centered within the return cylinder. Separator ties, which are welded between adjacent separators, increase the overall rigidity to the separator bundle and subsequently provide lateral support to the separators.

The secondary separators are welded between an upper and lower deck plate. These separators dry the steam by a centrifugal action imparted to the steam due to flow through tangential inlet vanes. The inner chamber wall in the main body has three slots which skim off the liquid as it passes over the inner surface of the chamber.

Figure 1 illustrates the separator arrangement used in the Ginna RSG's. Figure 2 shows the details of the primary and secondary separators used in the Ginna RSG's.

The design of the steam separators and the supports are such that fatigue or flow induced vibration cannot occur since there is no cross flow velocity and the structures are sufficiently rigid so they will not respond to any acoustic forces with large amplitudes.

The steam flow within primary and secondary steam separators is either internal flow, parallel to the component axis, or has a rotating component that does not subject the components to FIV loadings with respect to fluid-elastic instability or vortex shedding. The steam conditions within

the separators are two phase which are not prone to any acoustic wave generation or propagation. After passing through the secondary separators, the dry steam flows through a steam nozzle with seven venturies. The steam velocities through the flow restrictor after the power uprate (EPU) are lower than the steam velocities at similarly designed nozzles at Byron, Braidwood, McGuire and Catawba Nuclear Power Stations. Catawba has been in operation since October1996 with no detrimental effects on the secondary dryer deck plates. In can be stated that any possible acoustic waves generated at the flow restrictor are relatively small in comparison to the reinforced secondary deck. The deck was reinforced to take the accident loads during the MSLB.

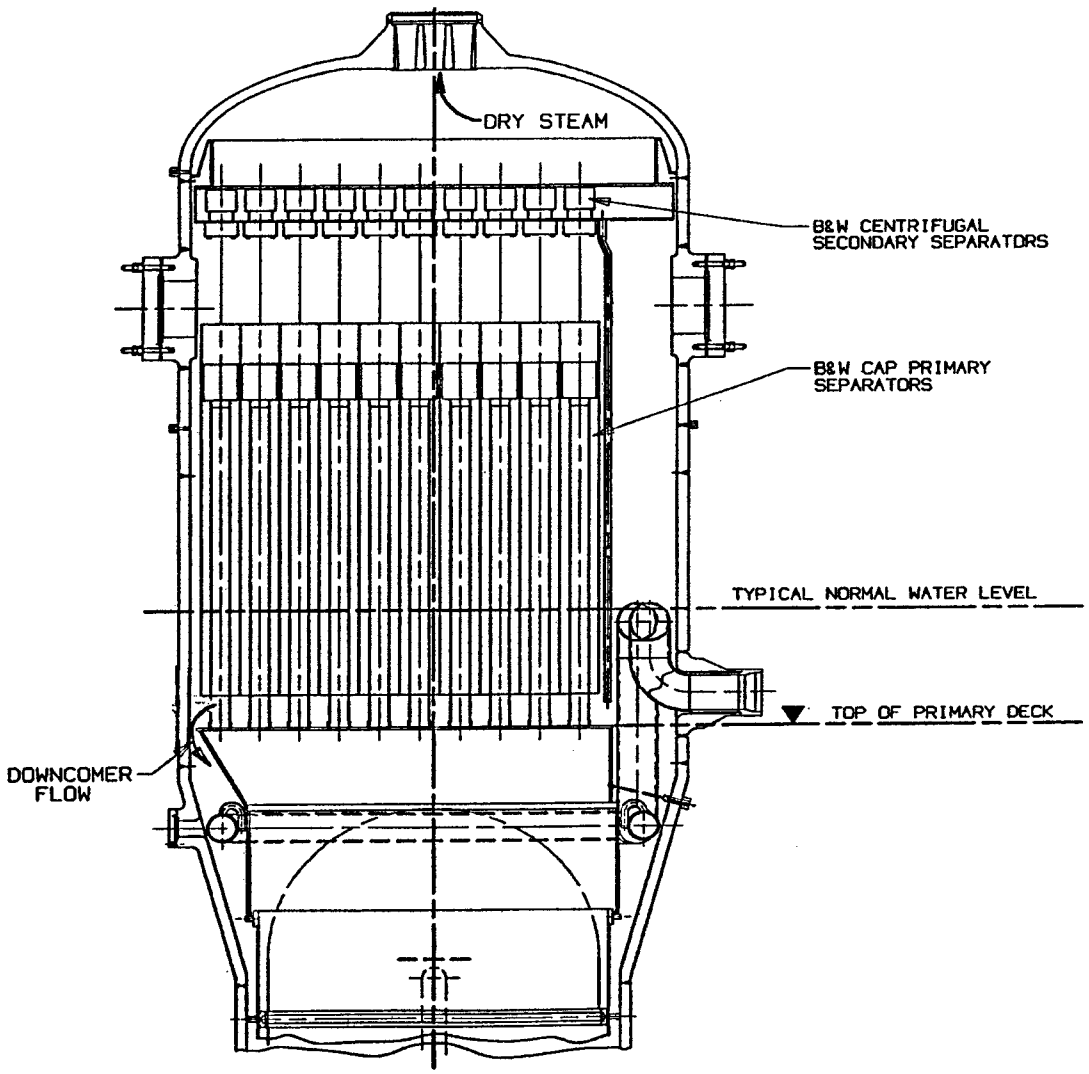

Figure 1 – Typical BWC Steam Drum Arrangement

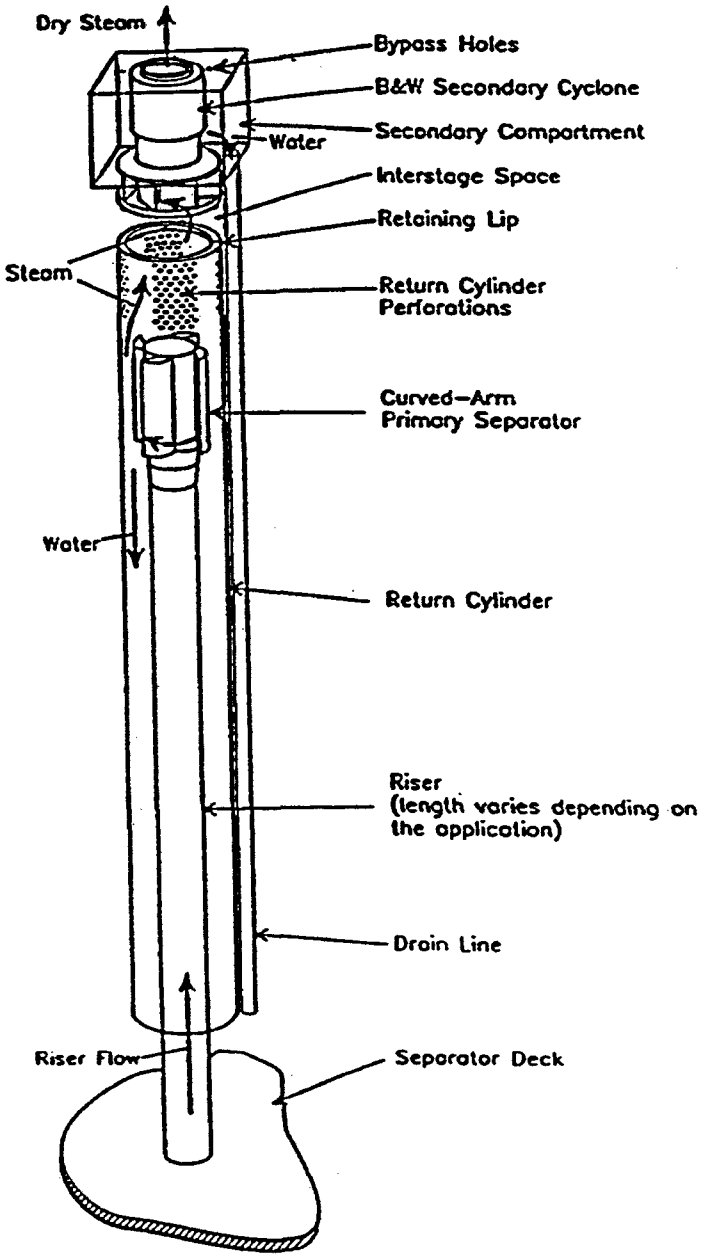

Figure 2 - BWC Primary and Secondary Separators

22. In Section 2.2.2.3 of the Licensing Report, the licensee indicated that the 40-year design transient sets have been shown to be bounding for 60 years of operation, and the fatigue evaluations performed for the EPU program demonstrate that the current design is

acceptable to support EPU conditions for 60 years of plant operation. Confirm whether the EPU evaluation was performed for 60 years of plant operation at EPU condition. Explain how the 40-year design transient sets have been shown to be bounding for 60 years of operation.

Response

EPU evaluations were performed accounting for a 60 year plant life with the EPU operating parameters invoked within the analysis spanning the period from September 2006 (projected EPU refueling outage) to September 2029 (end of current license). With respect to design transient sets: Transient cycle projections to 60 years of plant operation have been made using both a conservative linear cycle projection and a more realistic weighted projection, which assumes that the more recent plant operating history is more representative of future operation than earlier plant history. This assessment of the frequency and severity of actual plant transients demonstrates that there is sufficient conservatism in the original design basis transient set, based on either method of projection (linear or weighted), to adequately bound 60 year operating license. Thus it can be concluded that the 40-year design transient sets remain bounding for 60 years of operation.

PLANT SYSTEMS

Spent Fuel Pool Cooling System

1. Because the alternate spent fuel pool (SFP) makeup capability is not quite adequate for the worst-case boil-off rate of 52.8 gpm, the licensee indicated that the off-load time can be delayed until the boil-off rate is reduced to less than 50 gpm. Confirm that the criteria in the Ginna Technical Requirements Manual (TRM) and in the UFSAR for performing normal and full-core offloads will be revised to include verification that both the normal and the alternate SFP makeup capability will exceed the maximum SFP boil-off rate that could occur should there be a complete loss of SFP cooling.

   Response

   The worst case boil-off rate of 52.8 gpm is associated with the bounding full core off-load scenario. For normal refueling outage core off-load scenarios, the boil-off rate from the SFP following a loss of all SFP cooling is always well below the 50 gpm make-up capability due to the fewer fuel assemblies being off-loaded to the SFP. Therefore, there is no need to place any criteria in the Ginna TRM to verify that the SFP make-up capacity exceeds the boil-off rate for a normal core off load.

   The 52.8 gpm represents the maximum boil-off rate for a full core off-load scenario where a loss of SFP cooling occurs at the earliest possible off-load time. The reactor off-load time for the bounding analysis is 100 hours following reactor shutdown. This is the minimum time a core-off load can occur based on the assumptions used for the fuel handling accident radiological analysis. At this time the SFP water temperature is conservatively assumed to be at its maximum allowed value of 150°F. No credit for the transient heat-up of the SFP during the core off-load is assumed. Additionally, the maximum boil-off rate is calculated based on the SFP heat load that exists at the time the loss of SFP cooling occurs. The time required to heat the SFP to 212°F was conservatively ignored in the calculation of the 52.8 gpm boil-off rate.

   In reality, the time required to heat the SFP from 150°F to 212°F based on the thermal inertia of the SFP following a complete loss of SFP cooling is ~5 hours. The corresponding SFP boil-off rate at the time when the SFP reaches 212°F is ~52 gpm. Therefore, the maximum loss of SFP inventory with 50 gpm make-up capacity is ~2gpm. Assuming that the SFP make-up rate is limited to 50 gpm, it would require an additional 14 hours before the SFP boil-off rate would decrease to 50 gpm. During this time the integrated loss of SFP inventory would be approximately 1000 gallons of water. This would result in a decrease in SFP water level of less than 2 inches. Since Ginna Technical Specification 3.7.11 requires that the SFP water level above the top of irradiated fuel assemblies be greater than 23 feet, the loss of less than 2 inches of water due to pool boil-off following a loss of SFP cooling is considered negligible. Additionally, the calculation of the boil-off rate conservatively ignored the cooling of the SFP that occurs due to the addition of make-up water. This cooling would decrease the actual boil-off rate and

further reduce the loss of water inventory beyond that described above. Therefore, because this limiting analysis does not result in a loss of SFP inventory concern, Ginna does not consider changes to the existing Ginna TRM to be required.

2. The evaluation discussed in the Licensing Report is based on the worst-case decay heat load that is generated from 1321 fuel assemblies. Ginna TS 4.3.3 currently permits up to 1879 fuel assemblies to be stored in the SFP. Explain why the worst-case decay heat load analysis is not consistent with the current TSs.

Response

Ginna Technical Specification 4.3.3 states the spent fuel pool (SFP) is designed and shall be maintained with a storage capacity limited to no more than 1879 fuel assemblies and 1369 storage locations. This specification was based on the analysis performed for the Ginna SFP Re-rack modification that was approved by the NRC in an SER dated July 30, 1998. The analysis performed for the SFP re-rack in the mid 1990s assumed that all Ginna fuel assemblies off-loaded from initial criticality in 1969 up through a plant shutdown in 2029 would be stored in the SFP. The resulting number of fuel assemblies was estimated to be 1879. To accommodate this number of spent fuel assemblies in the existing SFP, the 1997 analysis assumed that fuel consolidation would be performed so that fuel rods from two fuel assemblies could be stored in one consolidated canister. This would essential double the number of number of fuel assemblies that could be stored in the existing SFP.

Today, Ginna does not plan on using consolidated assemblies to extend the number of spent fuel assemblies that can be stored in the SFP. As discussed in Section 2.5.4.1.2.2 (Cooling Capacity – Full Core Off-Load) of the EPU Licensing Report, Ginna plans on using dry cask storage beginning around 2009 to store old spent fuel assemblies on-site until such time as the Federal Repository for spent fuel becomes available to accept spent fuel assemblies. Therefore, fuel rod consolidation to store up to 1879 fuel assemblies in the existing SFP is no longer believed to be credible for assessing maximum SFP heat load.

Additionally, although T.S 4.3.3 states that the Ginna SFP is designed for 1369 storage locations, the existing Ginna SFP only contains 1321 storage locations. The 1369 locations is based on allowing Ginna to install an addition 48 SFP wall mounted racks at a later time. Ginna no longer believes that installing these additional wall mounted racks is a storage option that will be implemented. Therefore, the maximum number of fuel assemblies that would be stored in the existing Ginna SFP after EPU is limited to the 1321 existing storage locations.

<u>Service Water System</u>

1. Confirm that the results of heat exchanger performance monitoring per Generic Letter (GL) 89-13 recommendations demonstrate acceptable performance for EPU conditions.

Response

The Ginna Service Water System Reliability Optimization Program (SWSROP) documents the actions performed at Ginna Station to comply with NRC Generic Letter 89-13. This includes the commitments related to heat exchanger performance monitoring. Since the functional requirements of the various safety-related heat exchangers (e.g. Containment Re-circulation Fan Coolers, Component Cooling Water Heat Exchangers, Emergency Diesel Generator coolers) included within the scope of the Ginna SWSROP are not changing as a result of the EPU, the performance monitoring requirements presently included in the SWSROP will still apply after EPU. No additional monitoring activities are needed due to EPU to ensure that heat exchanger performance is being maintained within its design basis requirements.

Component Cooling Water (CCW) System

1. The Licensing Report indicated that administrative controls will be used to limit the CCW outlet temperature from the RHR heat exchangers during normal plant cooldown evolutions following EPU operation to 170 °F. Explain why it is necessary to impose this new temperature limit for EPU operation, and discuss how it will be implemented and managed.

   Response

   The EPU results in increased decay heat during a normal plant cooldown. Consequently, analyses were performed for EPU decay heat to assess the cooldown capability of the RHR/CCW System for various cooldown scenarios. The results of these analyses determined that for cooldown scenarios with early entry into RHR shutdown cooling (four to six hours after reactor shutdown) with a maximum RCS cooldown rate, the CCW temperature leaving the RHR heat exchanger could exceed 170°F which is the present maximum temperature assumed in the thermal stress analysis of CCW piping at the RHR heat exchanger outlet. Since the cooldown analyses are based on a bounding assessment of both decay heat and time of initiation of RHR cooling when compared to actual plant operating experiences, the results are believed to be conservative. Therefore, in lieu of analyzing the CCW piping to a higher temperature limit, the Ginna Operations Procedure O-2.2 (Plant Shutdown from Hot Shutdown Conditions to Cold Conditions) will be modified to include a note that Operations should monitor the CCW temperature when entering RHR shutdown cooling and control the RCS cooldown rate to prevent the CCW temperature leaving the RHR heat exchangers from exceeding 170°F. Training will be provided to the plant operators on this issue as part of the overall training for impact of EPU on plant operations.

2. Explain what impact the proposed EPU will have on the flow-induced vibration considerations discussed in Section 9.2.2.4.1.6 of the Ginna UFSAR, including a discussion of any additional limitations that must be relied upon.

Response

The EPU will not have any impact on the flow-induced vibration considerations discussed in Section 9.2.2.4.1.6 of the Ginna UFSAR. The flow-induced vibration issues relate to Component Cooling Water (CCW) shell side flow limits for both the CCW and Residual Heat Removal (RHR) heat exchangers. There are no changes to the CCW flows to both of these heat exchangers due to EPU. Therefore, the existing limits on CCW flows to these heat exchangers discussed in Ginna UFSAR Section 9.2.2.4.1.6 are still applicable and will still be satisfied for the EPU.

3. Section 9.2.2.4.3 of the Ginna UFSAR indicates that following a loss-of-coolant accident (LOCA), one CCW pump and one CCW heat exchanger are capable of accommodating the heat loads. However, the Licensing Report indicates that both CCW heat exchangers are relied upon for decay heat removal during the recirculation mode following a LOCA. Explain this apparent inconsistency.

Response

The long term containment cooldown analysis performed for EPU assumed that only one train of the Residual Heat Removal (RHR) System would be available due to a limiting single active failure of an Emergency Diesel Generator. Consistent with this single active failure it also assumed that only one CCW Pump would be available for cooling of one RHR heat exchanger. Due to the design of the Ginna CCW System which includes a common CCW header for CCW flow to the two CCW Heat Exchangers, one CCW Pump would supply water to both CCW heat exchangers. The CCW heat exchangers are cooled by the SW Pumps. The Ginna SW System design also includes a common SW header design feature which allows any operating SW Pumps to provided SW flow to both CCW heat. exchangers. As part of the transfer to the LOCA re-circulation phase, Ginna Emergency Operation Procedure (EOP) ES-1.3 directs Operations to supply SW flow to both CCW heat exchangers with two operating SW Pumps available. At EPU conditions, a minimum of two SW Pumps (out of 4 SW Pumps available) would be operating for the transfer to the re-circulation phase. Therefore, per the Ginna EOPs, both CCW heat exchangers would be receiving both SW and CCW flow and therefore would be functional for performing cooling of a single train of RHR during the re-circulation phase of a design basis LOCA

4. Explain what impact the proposed EPU will have on the capability of the CCW system to cool the plant to cold shutdown conditions within 72 hours in accordance with Appendix R requirements, as described in Section 9.2.2.4.3 of the Ginna UFSAR.

Response

Due to the increase in decay heat associated with the EPU, the time required to cool the plant to cold shutdown conditions following a fire is expected to increase. Therefore, as part of the EPU, an analysis was performed to determine if the CCW System was still

capable to cool the plant to cold shutdown conditions within 72 hours as required by Appendix R. Using EPU decay heat and assuming only one train of RHR with one CCW Pump and one CCW heat exchanger available, it was determined that the ability to reach cold shutdown conditions within 72 hours was still satisfied as long as the initiation of RHR cooling occurred no later than 60 hours following initial plant shutdown. Therefore, it is concluded that the EPU does not impact the ability of the Ginna CCW System to cool the plant to a cold shutdown condition with 72 hours for those Appendix R events where the CCW System is relied upon for achieving cold shutdown.

REACTOR SYSTEMS

General

1. Confirm that only safety grade systems and components are credited in the re-analyses of all transients and accidents in Licensing Report.

   Response

   The re-analysis of accidents in the Licensing Report generally credits safety only grade systems for mitigation. However, certain components with augmented quality, testing, and maintenance are credited for mitigation of a steam line break (e.g., turbine stop valves). This is consistent with the guidance provided by NUREG-0138, issue 1.

   The re-analysis of transients (vs. accidents) generally credits non safety grade control systems to ensure Ginna performs properly for the design base transients. Of course some transient inducing off normal events are required to be mitigated by non safety related equipment (e.g. ATWS) while others, such as Station Blackout, are evaluated using non-safety grad sources of water or non-safety related equipment to establish a heat sink.

Thermal and Hydraulic Design

1. Provide an evaluation that shows the P-7 setpoint (8.5% RTP), the P-8 setpoint (< 49% rated thermal power), and the P-9 setpoint (> 50%) will continue to perform their intended functions after the EPU.

   Response

   As part of the efforts performed for the Extended Power Uprate, a reanalysis of the P-9 setpoint was performed as part of the Plant Operability Analyses. This was done for the lowest full power Tavg value and for the 10% steam generator tube plugging condition to result in the minimum steam pressure and lowest steam dump capacity. The results showed that a turbine trip without reactor trip from the P-9 setpoint of 50% could be successfully accomplished without actuating a pressurizer PORV. Detailed analyses were not performed for the P-7 setpoint as the impact of the uprating was minor on the effect of the setpoint (changing from about 8.5% to 10.2% of present power level).

   Also, a Loss of Flow analysis with no credit for reactor trip was performed at the P-8 setpoint and a DNB evaluation was performed in order to demonstrate that a single loop loss of flow initiated at the P-8 setpoint would not violate the DNB design basis. The P-8 setpoint for EPU will need to change to <35% power.

2. Provide a core limits and protection line diagram, equivalent to UFSAR Figure 15.0-1 for the EPU.

Response

Figure 2.8.5.0-2 in the LAR is the replacement figure for UFSAR Figure 15.0-1.

3. Provide a tabulation of the thermal design parameters and compare them to values assumed in safety analyses to demonstrate that the safety analyses assumptions are conservative.

Response

The thermal design parameters associated with the Extended Power Uprate are given in Table 1-1 of the LAR. A range of operating conditions have been defined which include 0% to 10% steam generator tube plugging, a vessel average temperature range of 564.6°F to 576.0°F and a feedwater temperature range of 390°F to 435°F. The values assumed in the non-LOCA safety analyses are given in Table 2.8.5.0-2 of the LAR. The following table lists the thermal design parameters from Table 1.1 along with the analysis values:

Parameter	Design Value (from Table 1.1)	Analysis Value for RTDP Events (from Table 2.8.5.0-2	Analysis Value for non-RTDP Events (from Table 2.8.5.0-2)
NSSS Power (MWt)	1817.0	1817.0	1817.0
Core Power (MWt)	1811.0	1811.0	1811.0
Max. Full Power Vessel Tavg (°F)	576.0	576.0	576.0±4.
Min. Full Power Vessel Tavg (°F)	564.6	564.6	564.6±4.
No-Load RCS Temperature (°F)	547.0	547.0	547.0
Pressurizer Pressure (psia)	2250.0	2250.0	2250.0±60.
Minimum Measured Flow (gpm)	177300.	177300.**	Not Applicable
Thermal Design Flow (gpm)	170200.	Not Applicable	170200. *

* From Section 2.8.5.0.3
** This value is not given in the analysis section of the LAR. The TDF is given as 170200 gpm in Section 2.8.5.0.3 and Section 2.8.5.0.3 further notes that "the RCS flow allowance is represented by the difference between TDF and MMF. The flow uncertainty is equivalent to 4%." The MMF value assumed in the analyses is 177300 gpm.

Rupture of a Steam Pipe — Hot, Zero Power (HZP) Core Response and Hot, Full Power (HFP) Core Response

1. Provide a graph of SG mass versus time.

Response

Figure 1 – Steam Generator Mass vs. Time – HZP SLB

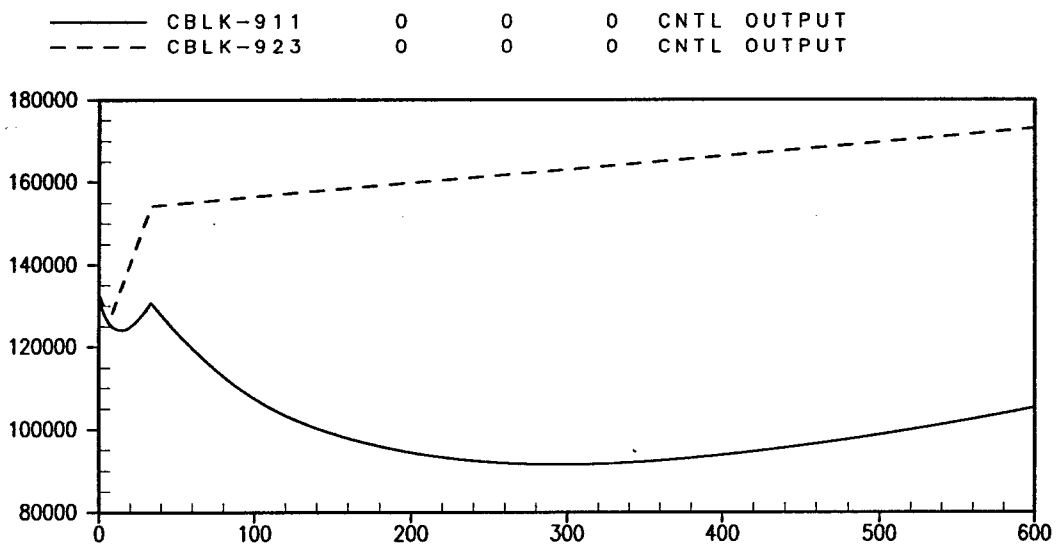

Figure 2 – Steam Generator Mass vs. Time – HFP SLB

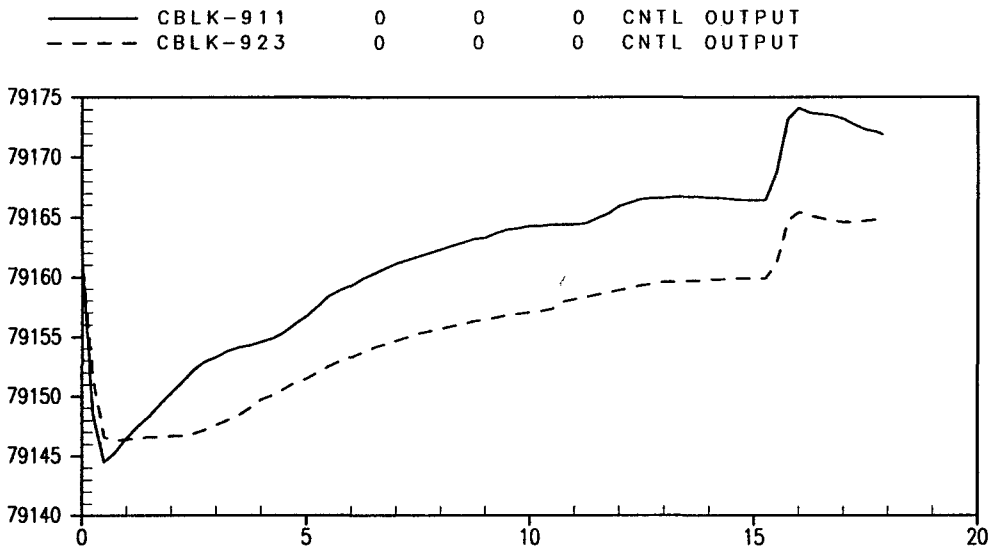

2. The graph of core average temperature vs. time on Page 2.8.5.1.2-11 of the Licensing Report only goes up to 550 °F; discuss whether it should go to at least 557 °F (e.g., the no-load average coolant temperature)?

Response

The no-load average coolant temperature for R. E. Ginna is 547°F. It's not easy to read because of the scale on the plot, but the initial average coolant temperature assumed in the Hot Zero Power Steamline Break analysis is 547°F.

3. Justify the 10-minute assumption for operators to manually close the main steam isolation valves (MSIV5) (see Page 2.8.5.1.2-7 of the Licensing Report) for the smallest break that does not actuate protection.

Response

For Steam Breaks, given a small steam line break downstream of the MSIVs that does not actuate Steam Line Isolation (SLI), the operator would be provided adequate indications to diagnose the break (RCS temperature and pressure decreasing, pressurizer level decreasing toward letdown isolation and audible verification of break). Safety Injection would be actuated on low PRZR pressure and the Operator would enter E-0, Reactor Trip or Safety Injection. The visual indications and alarms coupled with significant audible input should prompt immediate anticipatory closure of the MSIVs to terminate the RCS cooldown. However, disregarding anticipatory actions, implementation of the E-0 procedure step sequence would provide an initial opportunity to close MSIVs in step 8 where a check of conditions requiring SLI is performed. Time studies on performance of

E-0 on the simulator indicated that step 8 would be completed within ~3.8 minutes. Subsequent to step 8, the operator is directed to close MSIVs at step 20 if RCS cooldown has not been terminated. The time study indicated that step 20, for current plant response, would be performed at ~9.5 minutes. As indicated in LR 2.11.1 page 3, the E-0 automatic action verification steps are being streamlined to expedite the diagnostic and plant stabilization steps which will enhance the operators' ability to meet required timelines. This enhancement is being implemented in accordance with the guidance provided by the response to the Westinghouse Owners Group direct work request DW-96-038.

4. Verify that the break analyzed on Page 2.8.5.1.2-7 is the smallest break that does not actuate protection.

Response

The case analyzed is the smallest break that *reaches* the revised High Steam Flow setpoint but no credit is taken for steamline isolation on that signal. Thus, breaks larger than that break will all generate a steamline isolation signal.

5. On Page 2.8.5.1.2-14, the first paragraph, the third sentence of Section 2.8.5.1.2.2.2.2 (Input Parameters, Assumptions and Acceptance Criteria) states that "[w]hen RTDP is not applicable, uncertainties are included in the initial conditions or are conservatively applied to the limiting transient condition in the calculation of the minimum DNBR." What is meant by the portion which states "or are conservatively applied to the limiting transient condition in the calculation of the minimum DNBR."?

Response

There are three ways of including the uncertainties in the non-LOCA analyses. For RTDP applications, the uncertainties are statistically combined into the DNBR limit per the approved RTDP methodology (WCAP-11397-P-A). For non-RTDP applications, the uncertainties are explicitly included in the initial conditions of the analysis. When statepoints are generated and the statepoints are to be used for both an RTDP application (i.e., DNBR calculation) and a non-RTDP application (i.e. peak kw/ft calculation), the uncertainties are not included in the analysis. In this case, the uncertainties are, as described above, in the DNBR limit for the DNBR calculation and are conservatively added to the statepoint for the kw/ft calculation in order to ensure conservative kw/ft results.

6. On Page 2.8.5.1.2-14, Section 2.8.5.1.2.2.2.2 (Input Parameters, Assumptions and Acceptance Criteria), the fourth bullet (Feedwater Temperature), the last sentence asserts that "Sensitivity studies have shown that HFP SLB results are not influenced by the assumed initial feedwater temperature." Does the phrase "not influenced" mean that the initial feedwater temperature has no effect on the results? If so, what is the reason for this phenomenon?

Response

Generic sensitivity studies performed assumed feedwater temperatures of 430°F, 462°F and 460°F. All three cases resulted in the same minimum DNBR and the same peak heat flux. The steady state steam flow is a function of the initial feedwater temperature but the break flow is a function of the break size (critical Moody flow). Thus, the total flow and the resulting primary system transient are slightly different for different feedwater temperatures for the same break area. However, the methodology searches for the limiting break area as defined by the minimum DNBR and peak heat flux. The limiting break area changes very slightly with the feedwater temperature assumption but the results do not change. Hense, the statement in the licensing report that the "HFP SLB *results* are not influenced by the assumed initial feedwater temperature." A lower feedwater temperature would have a slightly larger "limiting" break size but the same resulting minimum DNBR and maximum heat flux.

7. In the nuclear power versus time graph on Page 2.8.5.1.2-1 8, power seems to turn and increase again before decreasing drastically at the time of 14 seconds. What is the cause of this slight upturn?

Response

The slight upturn in the plot is due to an overly conservative trip shape (reactivity vs. rod position) and overly conservative reactivity feedback coefficients assumed in the analysis. The characteristics of the reactivity insertion of the control rods following reactor trip is provided by a table (set of x-y coordinate points). The power transient can be sensitive to the slope changes in this table. At the point in the transient where the "slight upturn" occurs, the trip reactivity from this table is at a point where the trip reactivity addition has become less significant (the slope is reduced) than the density feedback from the water conditions in the core. These combine to cause the transient seen in the plot.

8. In Table 2.8.5.1.2.2.1-1 on Page 2.8.5.1.2-9 (the Sequence of Events for the HZP case), the MSIV5 close 7 seconds after the safety injection (SI) system actuation signal is generated at 8.4 seconds. The low steam pressure SI system actuation setpoint is reached at 1.4 seconds. This implies that there is no processing time between when the low steam pressure SI system actuation setpoint is reached and the SI system actuation signal is produced. Verify if this is correct.

Response

No. The MSIV stroke time is 5 seconds. There are 2 seconds included to allow for signal processing.

9. In Table 2.8.5.1.2.2.1-1, the licensee stated that the high-head SI pump reaches rated

speed at 12 seconds after the SI system actuation signal is generated at 15.4 seconds, which implies that the SI system actuation signal is generated at 3.4 seconds. Verify if this is correct.

Response

No. The dynamically compensated low steam pressure setpoint is reached at 1.4 seconds. There is a 2 second delay for signal processing. A low steam pressure signal starts SI and isolates the steamlines and the feedlines. There is a 12 second delay for starting the SI pumps, a 5 second stroke time on the MSIVs and a 30 second stroke time on the MFIVs. Each of these delays starts after the 2 seconds for signal processing. Table 2.8.5.1.2.2.1-1 is inconsistent in that the stated delay times on MSIV and MFIV closure time include the signal processing delay and the SI pump start time does not.

Loss of External Load

1. The licensee indicated that the allowable peak RCS pressure during an anticipated operational occurrences (AOO) is 2485 psig (100% of the RCS design pressure). Confirm that this value is the licensing basis for Ginna.

Response

The correct limit is 110% of design or 2748.5 psia which is given later Section 2.8.5.2.1.2.2 Input Parameters, Assumptions and Acceptance Criteria and in Table 2.8.5.2.1-2 Loss of External Electrical Load and/or Turbine Trip – Results and Comparison to Previous Results.

2. In Section 2.8.5.2.1.2.1, the licensee indicated that Ginna is designed to accept a 50% rapid decrease (200% per minute) in electrical load while operating at full power without actuating a reactor trip. Describe the capacity of the steam dump system, and confirm that the operation of the steam bypass valves are fast enough to handle this transient given EPU conditions

   Response

   As part of the efforts performed for the Extended Power Uprate, a reanalysis of the Large Load Rejection transient was performed as part of the Plant Operability Analyses. This was done for the lowest full power Tavg value and for the 10% steam generator tube plugging condition to result in the minimum steam pressure and lowest steam dump capacity. The results showed that a load rejection from 100% to 50% power at the maximum turbine unloading rate of 200%/minute was able to be successfully accommodated without challenging any reactor trip setpoints or steam generator PORV setpoints.

3. Provide a quantitative discussion regarding instrumentation uncertainties to support the use of nominal values for RCS temperature and pressure in the analysis as initial plant conditions while the revised thermal design procedure is used

   Response

   With the Revised Thermal Design Procedure (RTDP), nominal parameter values are used in the DNBR calculations. Relevant instrumentation uncertainties are included in the Design Limit (DL) DNBR calculations. For Ginna power uprate program, the RCS pressure uncertainty of 60 psi and the RCS temperature uncertainty of 4 °F are used in the DL DNBR calculations.

4. The limiting single failure assumed in the analysis for loss of load transient is the failure of one train of the reactor trip system (RTS). This assumption would not affect the transient scenario at all. Discuss the process used for selecting the limiting single failure in the safety analysis that could cause negative effects to the transient.

   Response

   There is no single failure which yields more limiting analysis results. The Westinghouse non-LOCA analysis philosophy is that control systems are assumed to operate as designed if their operation yields more limiting analysis results. Control systems are not assumed to operate abnormally during a transient except as an initial condition (e.g., a Rod Withdrawal event). Thus, a failure of a control system is not applicable as a limiting single failure. Feedwater isolation (redundant valves with different closure times), auxiliary feedwater (multiple pumps) and safety injection (multiple pumps) are

susceptible to a single failure. However, none of these systems provide any mitigation for a Loss of Load event. Thus, these systems are not applicable as a limiting single failure. Furthermore, the protection system is designed to be single failure proof.

Loss of Normal Feedwater

1. Provide the transient data for departure from nucleate boiling ration (DNBR), peak RCS pressure and peak main steam system pressure to support the licensee's conclusion that the acceptance criteria for this event are met.

Response

With respect to DNBR and peak primary and secondary pressure, a Loss of Normal Feedwater transient (LONF) is bounded by the Loss of Load / Turbine Trip (LOL/TT) transient. This is due to the assumption of turbine trip occurring for a LONF after reactor trip. For a LOL/TT event, the turbine trip is the initiating fault. Thus, the primary-to-secondary power mismatch and RCS and MSS heat ups and pressurizations are more severe for a LOL/TT event. Because of this, assumptions are made in the LONF analysis to maximize pressurizer filling and not necessarily to penalize the DNBR or pressure results. Transient plots of primary pressure and secondary pressure are included in the Licensing Amendment Request as Figures 2.8.5.2.3-3 and 2.8.5.2.3-2. These plots are of a LONF transient analyzed to penalize pressurizer filling and not necessarily primary and secondary pressure. No transient plot of the DNBR is available because DNBR is not an acceptance criteria looked at for a LONF event with the Westinghouse methodology.

2. Provide a discussion of the limiting single failures assumed in the analyses.

Response

The limiting single failure assumption is a failure of the Turbine Driven Auxiliary Feedwater pump. Of the three AFW pumps, the TDP has the largest capacity making it the most limiting failure.

3. Discuss the provisions made in plant emergency operating procedures (EOPs) for controlling AFW at the beginning of the event to prevent excess cooldown during this event.

Response

For loss of normal feedwater, Step 19 of E-0 directs the operator to stop the TDAFW pump if both MDAFW pumps are running. Step 20 of E-0 checks RCS Tavg stable at no-load temperature. If temperature is decreasing the operator is directed to control total feed flow to greater than 200gpm until narrow range level is onscale in 1 S/G. The

background for the step and operator training reinforce that Total flow should be reduced to maintain just greater than 200 gpm to mitigate the cooldown. Step 20 guidance is being modified to effectively indicate that flow should be reduced to establish between 200 and 230 gpm total AFW flow until narrow range level is onscale in 1 S/G. Total flow is defined and trained as flow to both S/Gs. These steps coupled with the streamlining of the E-0 steps discussed in LR 2.11.1 page 3 should ensure that AFW flow is controlled in a timely manner.

Feedwater System Pipe Breaks

1. What is the physical basis for the 1.418 sq. ft. break size? Is this the feed line pipe size, the equivalent flow area through the feed ring, or is it something else?

   Response

   The 1.418 sq ft break size is conservatively based on the diameter of the feedwater inlet nozzle, excluding the sleeve. A sensitivity study was performed to determine that a 1.418 sq ft break size resulted in more limiting results with respect to margin to hot leg saturation than that of the feedwater nozzle sleeve inside diameter of 1.12 sq ft, which is the largest effective break size that the generator could experience.

2. Justify crediting closure of the check valve to isolate the faulted SG.

   Response

   The statement in Section 2.8.5.2.4.2.1 should say that the check valve in the steamline was assumed to close and not the check valve in the feedline. The steamline check valve would be expected to close following a turbine trip due to the backflow in the steamline. Should the check valve fail to close, the resulting condition potentially would be a cooldown of the RCS. As stated in Section 2.8.5.2.4.2.1, the potential cooldown effects of a secondary pipe rupture are evaluated in the steamline break analysis.

3. In Table 2.8.5.2.4-1, explain the statement that the steamline check valves close on turbine trip.

   Response

   See response to FLB RAI # 2 above.

4. How is SG water level determined during a feedline break?

   Response

   The limiting cases (i.e., the minimum reactivity feedback cases) use a detailed plant-specific steam generator model developed using the methods described in Section 3 of

WCAP-14882-S1-P-A to obtain a secondary side SG mass at the safety analysis low-low SG level trip setpoint. The steam generator mass is then used as the basis for the reactor trip condition in RETRAN. To determine feedring and tube uncovery the steam generator water level modeling is consistent with that described in WCAP-14882-S1-P-A.

5. What operator actions were credited for the feedline break analysis, and when were they assumed to occur?

Response

The standby auxiliary feedwater system, may be required for a break in the intermediate building. The turbine driven auxiliary feedwater pump realignment is required for a break in the containment building when the failure is to the (preferred) motor driven auxiliary feedwater to the intact steam generator.

The operator is required to realign the auxiliary feedwater system or put the standby auxiliary feedwater system into operation 870 seconds after the receipt of the low-low steam generator level signal for a feedwater line break inside containment or in the intermediate building downstream of the check valve.

6. What is the transient break flow quality? How is that determined?

Response
The transient break flow quality is calculated by RETRAN as a function of temperature and pressure with respect to time. The break flow quality calculated by RETRAN was demonstrated to be nearly identical to that calculated by NOTRUMP before the feedring uncovers. Following feedring uncovery and reactor trip, the RETRAN-calculated break flow quality is more conservative than NOTRUMP since the RETRAN-calculated break flow quality is lower. This maximizes the mass discharge out of the break and thereby maximizes the RCS heatup. The break quality as a function of time is shown in Figure 3.

<u>Loss of Forced Reactor Coolant Flow</u>

1. Discuss the single failure modeled in the analysis. Also, provide the input parameters used in the analysis as described in UFSAR Section 15.3.1.4.1, and state why these values are conservative.

Response

The Westinghouse non-LOCA analysis philosophy is that control systems are assumed to operate as designed if their operation yields more limiting analysis results. Control systems are not assumed to operate abnormally during a transient except as an initial condition (e.g., a Rod Withdrawal event). Thus, a failure of a control system is not applicable as a limiting single failure. Feedwater isolation (redundant valves with

different closure times), auxiliary feedwater (multiple pumps) and safety injection (multiple pumps) are susceptible to a single failure. However, none of these systems provide any mitigation for a Loss of Reactor Coolant Flow event. Thus, these systems are not applicable as a limiting single failure. Furthermore, the protection system is designed to be single failure proof. As such, there is no single failure which yields more limiting analysis results.

The Loss of Flow analyses are performed with the Revised Thermal Design Procedure. Thus, key assumptions are the minimum measured flow of 177300 gpm, high initial Tavg of 576.0, initial pressure of 2250 psia and 100% power (1817 MWt). Initial condition uncertainties are included in the DNBR limit per the Revised Thermal Design Procedure. Reactor trip is assumed to occur from the undervoltage, underfrequency or low flow trips.

2. Provide the technical justification explaining why the results of the partial loss of flow event were non-limiting compared to the complete loss of flow event and why the complete loss of flow is the most limiting event between the two.

Response

Two complete loss of flow events are analyzed. The first represents both pumps tripped at the beginning of the transient with the flow rate governed by the momentum/inertia of the RCP flywheels. The second complete loss of flow event is a frequency decay where it is assumed that the line frequency decreases by 5 hz /minute which drives the flow down. The frequency decay case is the more limiting complete loss of flow event. The complete and partial loss of flow events are both initiated at hot full power conditions. The total core flow for the complete loss of flow event decreases more rapidly than in the partial loss of flow event for two reasons – both loops are affected vs. only one loop and the complete LOF case is a frequency decay where the flow in the partial loss of flow case is held up by the inertia of the flywheel. The most limiting point in the transient is the point where the power to flow ratio is the largest. The complete loss of flow event always has a larger power-to-flow ratio than the partial loss of flow event, due to the lower flow.

3. Provide the transient data and values for DNBR, peak RCS pressure, and peak main steam system pressure to support the licensee's conclusion that the acceptance criteria for this event are met.

Response

Transient plots of RCS pressure and DNBR are already provided via Figure 2.8.5.3.1-3. A plot of steam pressure is not available. Steam pressure stays constant until the reactor and turbine trips occur. Steam pressure then increases steadily towards the secondary safety valve setpoint. If the transient is allowed to run long enough, the safety valves would lift and the pressure increase terminates.

Reactor Coolant Pump Rotor Seizure and Reactor Coolant Pump Shaft Break

1. In Section 2.8.5.3.2, the licensee only provided the results for the locked rotor event. Clarify whether the locked rotor or reactor coolant pump shaft break event is more limiting, and provide the basis for this conclusion.

   Response

   The analysis performed is a combination Locked Rotor and Sheared Shaft and represents a more limiting transient than either a Locked Rotor or a Sheared Shaft performed independently. For the early part of the transient, a Locked Rotor is modeled which allows for an abrupt decrease in RCS flow. Then the sheared shaft is modeled because it allows the rotor to spin backwards resulting in reverse flow in the faulted loop and a lower core flow. This reverse flow is evident in Figure 2.8.5.3.2-1.

2. In Section 2.8.5.3.2.3, the licensee stated that the previous analyses are more limiting than the EPU analyses because the previous analyses assumed an overly conservative rod drop time. This additional unnecessary conservatism has been removed from the EPU analysis. Provide the technical justification that shows it is acceptable to remove this time from the current licensing basis.

   Response

   The Technical Specification rod drop time is 1.8 seconds. The EPU analysis is consistent with the R. E. Ginna Technical Specifications. The previous analyses assumed a drop time in excess of the Technical Specification drop time.

3. In Section 2.8.5.3.2.3, the licensee stated with respect to secondary overpressurization, that there are other transients that demonstrate that the secondary pressure limit is met for this event. Provide the technical justification that explains how these transients are more limiting and how the secondary side pressure acceptance criteria continues to be met.

   Response

   The loss of load / turbine trip event is the most limiting primary and secondary pressure event. This is due to the assumption of turbine trip occurring for other events after reactor trip. For a LOL/TT event, the turbine trip is the initiating fault. Thus, the primary-to-secondary power mismatch and RCS and MSS heat ups and pressurizations are more severe for a LOL/TT event.

4. State the single failure modeled in the analysis and justify why this is the worst case modeled. Was a loss of offsite power considered? Explain why or why not.

   Response

   The Westinghouse non-LOCA analysis philosophy is that control systems are assumed to

operate as designed if their operation yields more limiting analysis results. Control systems are not assumed to operate abnormally during a transient except as an initial condition (e.g., a Rod Withdrawal event). Thus, a failure of a control system is not applicable as a limiting single failure. Feedwater isolation (redundant valves with different closure times), auxiliary feedwater (multiple pumps) and safety injection (multiple pumps) are susceptible to a single failure. However, none of these systems provide any mitigation for a RCP Rotor Seizure or Shaft Break event. Thus, these systems are not applicable as a limiting single failure. Furthermore, the protection system is designed to be single failure proof. As such, there is no single failure which yields more limiting analysis results.

A loss of offsite power is assumed in the analysis. The loss of offsite power coincident with reactor trip results in a coast down of the intact reactor coolant pump.

5. Provide the DNBR value for this event and quantify the fuel failed if the DNBR limit was exceeded.

Response

DNBR calculations were not performed for the EPU for Locked Rotor and have never been performed for Ginna for Locked Rotor. The dose evaluation assumes fuel rods producing 50% or more core power fail. Ginna core power parameters were compared to those of other 2-loop plants. The parameters include core power, F_Q and $F\Delta H$. The values for Ginna EPU and Kewaunee V+ are comparable. Kewaunee concluded <50% failed fuel, Ginna is using 50%. Note that this value represents rods producing 50% of the core power, rather than 50% of the number of rods.

<u>Overpressure Protection during Power Operation</u>

1. In the Licensing Report, the licensee included descriptions of provisions to address overpressure protection for Ginna operating at the uprated power. This information addresses only the change in the pressurizer safety valve upper lift setting; not the adequacy of the safety valve capacity. Although UFSAR Table 5.2-1 refers to the ASME Code, Section III, Nuclear Vessels, 1965, it does not detail the analyses that were performed assuming the uprated power to demonstrate the adequacy of the safety valve capacity and to quantify the sufficiency of the design margin of the safety valve(s).

   Note that WCAP-7769, Revision 1, provides a demonstration of compliance for Ginna, based upon ASME Code, Section III, Articles NB-7300 and NC-7300, "Protection Against Overpressure," 1971. However, this demonstration was for Ginna operating at 1518.5 MWt.

   Provide the results of analyses based upon methods consistent with those of WCAP-7769 (including credit for the second (or later) safety grade trip from the reactor protection system) to show continued sufficiency of margin of design capacity for the Ginna

pressurizer and steam line safety valves, with Ginna operating at the uprated power of 1775 MWt.

Response

The Ginna EPU overpressure analyses are consistent with the requirements of SRP 5.2.2. SRP 5.2.2 requires that the second safety grade reactor trip signal be credited for safety valve sizing calculations. This is consistent with the safety valve sizing procedure discussed in Section 2 of WCAP-7769. WCAP-7769 states, "For the sizing, main feedwater flow is maintained and no credit for reactor trip is taken." This analysis is typically performed prior to construction of the plant to provide a basis for the capacity requirements for the safety valves and the requirement of SRP 5.2.2 provides a conservative basis for the number and design of the valves.

However, WCAP-7769 goes on to say, "After determining the required safety valve relief capacities, as described above, the loss of load transient is again analyzed for the case where main feedwater flow is lost when steam flow to the turbine is lost... For this case, the bases for analysis are the same as described above except that credit is taken for Doppler feedback and appropriate reactor trip, other than direct reactor trip on turbine trip." This describes the analysis performed in Chapter 15 of the UFSAR which verifies that the overpressure limits are satisfied with the current/latest design.

The analyses performed in support of the Ginna EPU Program are not safety valve sizing calculations - no changes are being made to the safety valves as a result of this uprating. The Loss of External Electrical Load / Turbine Trip analysis performed for the EPU Program, presented in Section 2.8.5.2.1, demonstrates that the safety valves have adequate capacity to maintain peak primary pressure below 110% of design which satisfies the requirements of GDC-15. GDC-15 applies to "any condition of normal operation, including anticipated operational occurrences" which does not include a common mode failure of the first safety grade reactor trip signal.

The Loss of External Load / Turbine Trip RCS overpressure analysis is performed to demonstrate that, in the event of a sudden loss of the secondary heat sink, the associated increase in reactor coolant system temperature does not result in overpressurization of the RCS system.

<u>Chemical and Volume Control System (CVCS) Malfunction and Boron Dilution</u>

1. Three positive displacement charging pumps can deliver a maximum of 180 gpm (charging flow is normally maintained at 46 gpm). The nominal steam volume in the pressurizer is 333 cu. ft., at the uprated power level (reduced from 397 cu. ft.). Dividing the steam volume by the maximum charging flow indicates that it would take less than 14 minutes to fill this volume. Tripping the reactor could delay the filling of the pressurizer. Perform a transient analysis to better estimate the pressurizer fill time, and provide information, such as simulator test results and emergency operating procedures, to confirm that the operator would have adequate time and indication to terminate the transient.

Response

Procedurally, the operators run only 2 charging pumps, 1 in auto and 1 in manual. The only time that 3 pumps would be running is for RCS/CVCS leak mitigation or possibly, momentarily, while swapping running pumps. For leak mitigation, flow would be increased or the third pump started only to maintain pressurizer level at program while investigating and/or isolating the leak. This evolution would be carefully controlled by the operator.

The charging pumps must be started manually; there is no auto start feature. There is a charging pump speed alarm that would actuate any time that all 3 pumps are running in manual or if any pump were running in auto at greater that 60% of controller output. This charging pump speed alarm would warn the operator that charging flow is increasing. If 180 gpm is established, the CVCS makeup system in auto cannot provide adequate makeup flow and VCT level would decrease to the low level alarm point and subsequently to the swapover point to the RWST. With injection of RWST water and associated negative reactivity into the RCS, Tavg would begin to decrease and control rods would begin stepping out to maintain temperature alerting the operator. The unexpected VCT auto makeup would also provide indication to the operator that a problem existed. At maximum charging flow the seal injection filter high D/P alarm would probably actuate. There is also a pressurizer high level alarm at 70% level and a high level reactor trip at 87% level, both of which would warn the operator that pressurizer level is increasing. As discussed above, there are many diverse indications that would alert the operator to check RCS/CVCS conditions and to identify this event in a timely manner.

A better estimate of pressurizer fill time can be obtained by taking into account the charging line pressure drop and associated relief valves. If all 3 charging pumps were running at maximum speed with the RCS at normal pressure, the D/P required to force 180 gpm into the RCS would raise charging pump discharge pressure above the setpoint of the charging pump relief valves and a portion of the total 180 gpm charging flow would be directed back to the VCT. Additionally, as the RCS pressurized due to the compression of the pressurizer gas bubble resulting from the CVCS malfunction, the amount of the charging flow that would be added to the RCS would decrease. Prior to a reactor trip, maximum deliverable flow to the RCS via the charging flow path and the RCP seal injection flow path is estimated to be less than 150 gpm. At this rate it would take approximately 6 min. to fill the pressurizer to the high level reactor trip setpoint. Following the reactor trip the RCS cools down and depressurizes slightly. The cool down causes an increase in the pressurizer steam space. The small depressurization is assumed to increase charging flow. A conservative value of 180 gpm is assumed (maximum flow from three charging pumps). Following reactor trip it would take 12 min. to fill the pressurizer at 180 gpm. The total time to fill the pressurizer is therefore 18 min. Based on the above alarms and indications this is considered sufficient time for the operator to terminate the event.

2. Explain why Mode 3 and 4 inadvertent Boron Dilution events are not included in Ginna's

EPU application.

Response

The Ginna licensing basis for Boron Dilution is Modes 1, 2 and 6. This is consistent with other plants licensed prior to the issuance of Reg. Guide 1.70, Revision 2 (~1980). Plants in this category were not required to backfit Mode 3 and 4 into their licensing basis.

3. Provide a description of the analysis which shows that the inadvertent Boron Dilution event requirements continue to be met, and include all inputs, assumptions, limitations, and results of that analysis. Identify any controls necessary to ensure the analysis remains bounding. Include the justification for the inputs and assumptions.

Response

Explicit analyses are performed in Modes 1, 2 and 6. The Mode 1 analysis assumes a 127 gpm dilution rate, an active RCS volume of 5123 ft^3, an initial boron concentration of 2100 ppm and a critical boron concentration of 1800 ppm. The Mode 2 analysis assumes a 120 gpm dilution rate, an active RCS volume of 5123 ft^3, an initial boron concentration of 2000 ppm and a critical boron concentration of 1800 ppm. The Mode 6 analysis assumes a 120 gpm dilution rate, an active RCS volume of 2042 ft^3, and an initial boron concentration to critical boron concentration ratio of 1.2914. The assumed boron concentrations are confirmed to be conservative during the reload evaluation performed prior to each cycle start-up. The active RCS volumes assumed are conservative in that no credit is taken for thermal expansion, maximum (10%) steam generator tube plugging is assumed, the Modes 1 and 2 volumes do not include the pressurizer or surge line, the Mode 6 volume includes only the reactor vessel (without the upper head) and the RHR volume.
The results of the analysis demonstrate that there is over 30 minutes in Mode 1 between the initiation of the event and a loss of shutdown margin, over 25 minutes in Mode 2 and 32 minutes in Mode 6. The acceptance criteria applied (15 minutes in Modes 1 and 2 and 30 minutes in Mode 6) is consistent with other plants licensed prior to the issuance of Reg. Guide 1.70, Revision 2 (~1980).

The only controls necessary to ensure the analysis remains bounding is to review each reload to ensure the assumed boron concentrations are bounding. The assumed dilution rate and RCS volumes can not change without a major plant modification which would evaluate the effect of the change on the boron dilution accidents.

4. Confirm that the Ginna TS 3.9.1 requirement for the refueling boron concentration to be greater than 2300 parts per million (ppm) continues to provide sufficient shutdown margin under EPU conditions, include transition and steady state cycles.

Response

A submittal has already been made to increase the refueling boron concentration to 2600 ppm. The adequacy of the revised refueling boron concentration will be verified during the reload evaluation prior to each cycle start-up.

New Fuel and Spent Fuel Storage

1. In its License Report, the licensee described the current licensing bases for the new and spent fuel storage systems. In Section 2.8.6.2, "Spent Fuel Storage," the licensee stated that the acceptance criteria for the spent fuel criticality analysis is based on maintaining the effective multiplication factor (keff), including all biases and uncertainties, less than 1.0 with full density unborated water and less than 0.95 with credit for borated water. Additionally, in Section 2.8.6.1, "New Fuel Storage," the licensee stated that it operated the new fuel storage racks under a 10 CFR 70.24 exemption for criticality monitors.

   The NRC staff reviewed the Ginna new and spent fuel storage licensing bases, including any previously NRC-approved licensing actions, to determine the appropriate regulatory criteria for reviewing the proposed EPU. On July 16, 1997, the NRC issued Ginna an exemption to the requirements of 10 CFR 70.24 for criticality monitors in the spent fuel pool. Subsequently, on July 30, 1998, the NRC issued Amendment No. 72 to the Ginna operating license to revise the criticality licensing basis of the Ginna spent fuel pool. The TS changes approved in that amendment were based on maintaining the keff less than 0.95 (not 1.0) with full density unborated water. The 1998 amendment invalidated the previous 10 CFR 70.24 exemption because it resulted in a change to the licensing basis.

   On November 12, 1998, the NRC issued 10 CFR 50.68, "Criticality accident requirements." 10 CFR 50.68(a) requires that "Each holder of a construction permit or operating license for a nuclear power reactor issued under this part,...shall comply with either 10 CFR 70.24 of this chapter or the requirements of paragraph (b) of this section." The NRC staff requests that the licensee describe how it complies with either 10 CFR 70.24 or 10 CFR 50.68.

   In Section 2.8.6.2.2.3, "Description of Analyses and Evaluations [for Spent Fuel Storage]", the licensee stated that the EPU core power level would not change the limiting axial burnup profile that was assumed in the UFSAR analysis. However, the licensee did not provide a technical justification for this conclusion. The NRC staff is concerned that to achieve the uprated power levels, fuel assemblies will be both burned harder and with different burnable poison loadings than was assumed in the current licensing basis criticality analyses. This could affect the axial burnup profiles of the irradiated assemblies. Describe the analysis performed to determine that under uprated conditions, the axial burnup profile assumed in the current spent fuel storage licensing basis remains bounding.

   Response

   The eight provisions of 10 CFR 50.68 are presented below, along with an assessment of

Ginna compliance:

1. Plant procedures shall prohibit the handling and storage at any one time of more fuel assemblies than have been determined to be safely subcritical under the most adverse moderation conditions feasible by unborated water.

Compliance – As noted in the NRC's June 16, 1997 SER which issued the exemption from 10 CFR 70.24, Ginna's June 15, 1997 submittal adequately described those procedures. Such procedures are still in effect.

2. The estimated ratio of neutron production to neutron absorption and leakage (k-effective) of the fresh fuel in the fresh fuel storage racks shall be calculated assuming the racks are loaded with fuel of the maximum fuel assembly reactivity and flooded with unborated water and must not exceed 0.95, at a 95 percent probability, 95 percent confidence level. This evaluation need not be performed if administrative controls and/or design features prevent such flooding or if fresh fuel storage racks are not used.

Compliance – Amendment 79, approved December 7, 2000, Section 4.3.1.2.b, states that "the new fuel storage racks are designed and shall be maintained with k eff $\leq$ 0.95 if fully flooded with unborated water which includes an allowance for uncertainties..."

3. If optimum moderation of fresh fuel in the fresh fuel storage racks occurs when the racks are assumed to be loaded with fuel of the maximum fuel assembly reactivity and filled with low-density hydrogenous fluid, the k-effective corresponding to this optimum must not exceed 0.98, at a 95 percent probability, 95 percent confidence level. This evaluation need not be performed if administrative controls and/or design features prevent such moderation or if fresh fuel storage racks are not used.

Compliance – Amendment 79, approved December 7, 2000, Section 4.3.1.2.c, states that "the new fuel storage racks are designed and shall be maintained with k eff $\leq$ 0.98 if moderated by aqueous foam which includes an allowance for uncertainties..."

4. If no credit for soluble boron is taken, the k-effective of the spent fuel storage racks loaded with fuel of the maximum fuel assembly reactivity must not exceed 0.95, at a 95 percent probability, 95 percent confidence level, if flooded with unborated water. If credit is taken for soluble boron, the k-effective of the spent fuel storage racks loaded with fuel of the maximum fuel assembly reactivity must not exceed 0.95, at a 95 percent probability, 95 percent confidence level, if flooded with borated water, and the k-effective must remain below 1.0 (subcritical) at a 95 percent probability, 95 percent confidence level, if flooded with unborated water.

Compliance – Ginna does credit soluble boron. Ginna Technical Specification sections 4.3.1.1.b and c. state "the spent fuel storage racks are designed and shall be maintained

with k eff < 1.0 if fully flooded with unborated water, and k eff ≤ 0.95 if fully flooded with borated water to ≥ 975 ppm, which includes an allowance for uncertainties..."

5. The quantity of SNM, other than nuclear fuel stored onsite, is less than the quantity necessary for a critical mass.

Compliance – As noted in the June 16, 1997 SER related to issuance of the 10 CFR 70.24 exemption, the non-fuel SNM at Ginna is in the form of fissile material incorporated into incore defectors and sources. This small quantity, and the form in which it is stored and used, precludes an inadvertent criticality.

6. Radiation monitors are provided in storage and associated handling areas when fuel is present to detect excessive radiation levels and to initiate appropriate safety actions.

Compliance – As noted in the June 16, 1997 SER, Ginna had (and continues to have) radiation monitors in accordance with GDC63, in fuel storage and handling areas that would alert personnel to excessive radiation levels and allow them to initiate appropriate safety actions.

7. The maximum nominal U-235 enrichment of the fresh fuel assemblies is limited to five (5.0) percent by weight.

Compliance – Ginna Technical Specification Section 4.3.1.1.a states that "the spent fuel storage racks are designed and shall be maintained with fuel assemblies having a maximum nominal U-235 enrichment of 5.0 weight percent". A comparable section 4.3.1.2.a exists for new fuel storage racks.

8. The FSAR is amended not later than the next update which 10CFR50.71 (e) of this part requires, indicating that the licensee has chosen to comply with 10CFR50.68 (b).

Compliance - A UFSAR Change Notice has been initiated to incorporate compliance with 10 CFR 50.68 into the UFSAR in accordance with 10 CFR 50.71(e).

With respect to the request "Describe the analysis performed to determine that under uprated conditions, the axial burnup profile assumed in the current spent fuel storage licensing basis remains bounding":

The limiting axial burnup shape is not dependant upon the core power level. The time required to achieve an assembly-averaged burnup is decreased with a higher average power per assembly due to the uprate conditions. The distribution of axial burnup, normalized to the assembly average burnup, is not affected by the power uprate conditions. The choice of the limiting "DOE axial burnup shape" was intended to conservatively bound calculated 3D results for discharged fuel assemblies. It is therefore a conservative assumption such that the criticality analysis results are bounded by the

most limiting axial burnup shape as recommended in Reference 1.

Note also that the use of higher burnable poison levels in fuel assembly designs for EPU typically employ a "cut-back" region at the top and bottom of the fuel assembly. The purpose of the "cut-back" region is to flatten the axial power shape which leads to a more uniform axial burnup shape. This effect would tend to make the limiting axial burnup shape (employed in the analysis) even more conservative compared to realistic axial burnup shapes for these fuel assembly designs. Also note the fuel assembly design employed for the spent fuel pool criticality analysis did not credit any burnable poisons.

Reference 1: "Topical Report on Actinide-Only Burnup Credit for PWR Spent Fuel Packages", DOE/RW-0472 Rev. 1, May 1997

2. A major component of the licensee's current spent fuel storage licensing basis was the incorporation of a reactivity equivalencing methodology for performing criticality analyses. The NRC and nuclear industry have determined that the potential exists for this type of methodology to provide nonconservative results unless special care is taken to ensure that other parameters used in the analyses, such as soluble boron concentration, are not varied. Since it does not appear that the licensee has performed new criticality analyses to demonstrate that the new fuel design will meet NRC regulations, describe how the potential nonconservative effects of reactivity equivalencing have been evaluated under the proposed uprated conditions.

Response

Westinghouse is aware of the issues surrounding reactivity equivalencing. The Ginna spent fuel pool criticality analysis contains directly calculated 3D results without any "reactivity equivalence". All assembly burnup/initial enrichment combinations were calculated directly with KENO. In addition, the soluble boron calculations were performed assuming the storage configurations which are least sensitive to soluble boron. The fuel mishandling accident scenarios were consistently calculated in the most conservative manner. In summary, reactivity equivalence was not employed in the Ginna spent fuel pool criticality analysis of record.

3. The licensee stated that the Westinghouse 14 x 14 422V+ fuel assemblies to be used under uprated conditions differ slightly in two important parameters from the Westinghouse fuel assemblies currently in use at Ginna. Based on its review of the licensee's EPU request, the NRC staff is unclear of all the differences between the new 422V+ fuel assemblies and the design basis fuel assemblies used in the new and spent fuel storage criticality analyses. Therefore, provide a detailed table showing all of the design parameters for the 422V+ and design basis fuel assemblies, including the allowed tolerances. Additionally, for any parameters where the new 422V+ fuel assembly design is not bounded by the design basis fuel assembly design, describe any evaluations or analyses performed to demonstrate that NRC regulations and safety limits are met.

Response

The design basis fuel assembly employed for discharged fuel assemblies in the spent fuel pool criticality analysis is based upon the parameters of the Westinghouse Standard fuel assembly design. The design basis fuel assembly employed for the new fuel storage vault criticality analysis is based upon the parameters of the Westinghouse OFA design. The following table supplies the key parameters (pellet diameter, fuel length, and enrichment) employed for the criticality analysis for the spent fuel pool, new fuel storage vault, and the values associated with the 422V+ fuel assembly design.

	Spent Fuel Pool	New Fuel Storage Vault	422V+ Fuel Assembly
Pellet Diameter, in.	0.3659	0.3444	0.3659 (+/- 0.0008)
Fuel Length, in	144	141.4	143.25 (+0.5 / -0.6)
Max. Enrichment, w/o	5.0	5.0	4.95 (+/- 0.05)

* The fuel stack height of 143.25 inches is a reference dimension for the 422V+ design. The tolerance values listed above represent approximate tolerances for the stack height, determined based on the actual tolerances for the plenum length and the fuel rod overall length.

The two parameters which are not bounding relative to the 422V+ fuel assembly design are the pellet diameter and fuel length employed for the criticality analysis of the new fuel storage vault. The fuel length affects the axial leakage and the difference in fuel length (value assumed in the analysis versus 422V+ value) will produce a very small change in the calculated multiplication factor. This is attributed to the fact that the axial leakage is inversely proportional to the square of the fuel height. The other parameter which does not bound the value associated with the 422V+ value is the pellet diameter employed for the new fuel storage vault. As already stated, the spacing of the new fuel storage vault is such that fuel assemblies are neutronically decoupled at full water density conditions and either the Westinghouse OFA or Westinghouse 422V+ fuel assembly designs would meet the 0.95 k-effective criteria. For optimum water density conditions, the analysis of record demonstrates that OFA design meets the 0.98 k-effective criteria. Based upon the amount of margin to the k-effective criteria, both the Westinghouse OFA and 422V+ fuel assembly designs would meet the 0.98 k-effective criteria.

The above table contains the tolerances associated with the pellet diameter, enrichment, and fuel length of the 422V+ fuel assembly design. Note that the nominal enrichment employed for the spent fuel pool and new fuel storage vault conservatively bounds the maximum enrichment expected for the 422V+ fuel assembly design.

LOCA Analysis

1. In order to show that the referenced, generically approved LOCA analysis methodologies apply specifically to the Ginna plant, provide a statement that the applicant and vendor have ongoing processes that assure that the ranges and values of the input parameters for the Ginna LOCA analysis conservatively bound the ranges and values of the as-operated plant parameters. Furthermore, if the Ginna plant-specific analyses are based on the model and or analyses of any other plant, then justify that the model or analyses apply to Ginna (e.g., the model wouldn't apply to Ginna, if the other design has a different vessel internals design).

   Response

   Both Ginna LLC and its analysis vendor (Westinghouse) have ongoing processes which ensure that the values and ranges of the Best Estimate Large Break LOCA analysis inputs for peak cladding temperature and oxidation-sensitive parameters bound the values and ranges of the as-operated plant for those parameters.

2. Provide a justification that the 1.5, 2, and 3-inch break sizes are sufficient to determine the limiting small-break LOCA (SBLOCA). If the SBLOCA is limiting for peak clad temperature, local oxidation, or core wide oxidation, present the limiting information requested above for the limiting SBLOCA break size if other than 1.5, 2, or 3 inches.

   Response

   Table 2-1 below shows the limiting peak cladding temperature, maximum local oxidation and core wide oxidation results for the Small Break LOCA (SBLOCA) and Large Break LOCA (LBLOCA) analyses performed for the R. E. Ginna Extended Power Uprate program. It can be seen from Table 2-1 that the LBLOCA results are much more limiting than the SBLOCA results; specifically, the LBLOCA PCT is greater than the SBLOCA PCT by 703°F.

   Based on the margin between the SBLOCA and LBLOCA results, it is judged that R. E. Ginna is clearly LBLOCA-limited, and the break spectrum used in the SBLOCA analysis (i.e., 1.5-, 2- and 3-inches) is sufficient to conclude that the "most severe postulated loss-of-coolant accidents are calculated" for the R. E. Ginna EPU, thus complying with 10 CFR 50.46.

Table 2-1; Results for R. E. Ginna EPU LOCA Analyses

10 CFR 50.46 Criterion	LBLOCA Result	SBLOCA Result
Peak Cladding Temperature (°F)	1870	1167
Maximum Local Oxidation (%)	3.4	0.07
Core Wide Oxidation (%)	0.30	0.01

Errata

The following typographical errors were discovered in Table 2.2.2.2.5.2-1 of the EPULR:

- The results for 'Tubesheet Blowdown and Shell Drain Holes' should instead be labeled 'Tubesheet Outer Most Tube Hole' and the EPU fatigue result should be 0.32 instead of 0.99.
- A new row should be added for 'Tubesheet Blowdown and Shell Drain Holes' with corresponding Pre-EPU results of 29.8 ksi and usage factor of 0.60, corresponding EPU results of 37.3 ksi and usage factor of 0.99, and corresponding allowables of 80.1 ksi and usage factor of 1.0.
- The two rows of results for 'Tubesheet Gutter' should be split up with the second row labeled as 'Primary Head / Tubesheet Weld'. The Pre-EPU fatigue usage factor for "Tubesheet Gutter' should be 0.16 instead of 0.30.
- The Pre-EPU fatigue usage factor for 'Primary Head at Support Pads' should be 0.65 instead of 0.38.
- The Pre-EPU result for 'Seal Skirt' should be 93.2 instead of 95.0.

In addition, please note a typo correction to the Licensing Report for Section 2.6.1.2.3.1 Loss-of-Coolant Accident, Boundary Conditions, LOCA Mass and Energy Release, for the sentence beginning with, "LR section 2.6.3.1, M&E Release Analysis for Postulated Loss-of-Coolant Accidents, describes the LOCA long-term M&E release methodology (Reference 2)," (Reference 2) should be (Reference 8).