Exelon Generation
4300 Winfield Road
Warrenville, IL 60555

www.exeloncorp.com

Exelon. Nuclear

10 CFR 50.90

RS-05-164

November 28, 2005

U.S. Nuclear Regulatory Commission
ATTN: Document Control Desk
Washington, DC 20555-0001

Braidwood Station, Units 1 and 2
Facility Operating License Nos. NPF-72 and NPF-77
NRC Docket Nos. STN 50-456 and STN 50-457

Byron Station, Units 1 and 2
Facility Operating License Nos. NPF-37 and NPF-66
NRC Docket Nos. STN 50-454 and STN 50-455

Subject: Response to NRC Request for Additional Information With Respect to Request for License Amendment Related to Application of Alternative Radiological Source Term

References:
(1) Letter from K. R. Jury (Exelon Generation Company, LLC) to NRC, "Request for License Amendment Related to Application of Alternative Radiological Source Term," dated February 15, 2005

(2) Letter from J. B. Hopkins (NRC) to C. M. Crane (Exelon Generation Company, LLC), "Braidwood Units 1 and 2, and Byron Units 1 and 2 – Request for Additional Information," dated July 29, 2005

In Reference 1, Exelon Generation Company, LLC (EGC) requested an amendment to Appendix A Technical Specifications (TS), of Facility Operating License Nos. NPF-72, NPF-77, NPF-37, and NPF-66 for Braidwood Station, Units 1 and 2, and Byron Station, Units 1 and 2, respectively. The proposed amendment was requested to support application of an alternative source term methodology in accordance with 10 CFR 50.67, "Accident Source Term." In Reference 2, the NRC informed EGC that additional information was required to support the review of the amendment request. The NRC requested that the response be provided within 120 days from the date of Reference 2. Attachment 1 to this letter provides the EGC responses to the NRC request for information.

This proposed revision does not affect the supporting analysis for the original license amendment request as described in Reference 1. No other information submitted with Reference 1 is affected by this additional information. The No Significant Hazards Consideration and the Environmental Consideration provided in Attachment 1 of Reference 1 are not affected by this additional information.

A001

EGC is providing the State of Illinois with a copy of this letter and its attachments to the designated State Official.

If you have any questions about this letter, please contact J. A. Bauer at (630) 657-2801.

I declare under penalty of perjury that the foregoing is true and correct. Executed on the 28th day of November 2005.

Respectfully,

Joseph A. Bauer
Manager – Licensing

Attachments:

Attachment 1: Response to NRC Request for Additional Information
Attachment 2: Calculation ATD-0356, "Post LOCA Containment Sump pH," Revision 5
Attachment 3: Simplified Diagrams (For Information Only)

Attachment 1

BRAIDWOOD STATION
UNITS 1 AND 2

Docket Nos. STN 50-456 and STN 50-457
License Nos. NPF-72 and NPF-77

and

BYRON STATION
UNITS 1 AND 2

Docket Nos. STN 50-454 and STN 50-455
License Nos. NPF-37 and NPF-66

Response to NRC Request for Additional Information

Attachment 1

Response to NRC Request for Additional Information

A. Iodine Leakage

After a loss-of-coolant accident (LOCA), a significant portion of the inventory of core iodine is released to the containment and some of this iodine leaks to the outside. In the submittal, two release paths are identified: containment leakage and emergency core cooling systems (ECCS) leakage.

Containment Leakage Path

(1) The iodine from the damaged core is released to the containment as 95% cesium iodide (CsI) and 5% as iodine (I_2) and hydriodic acid (HI). CsI and HI are soluble in sump water but I_2 is scarcely soluble. If the sump water is acidic some of the ionic iodine from CsI is converted to I_2 and because of its low solubility it is released into containment atmosphere and some of it will leak to the outside. To prevent this from happening the pH of the sump water has to be maintained at the pH value of ≥ 7. Describe your program for controlling sump pH to maintain it basic. The description should include: (a) chemicals used for sump pH control; (b) the procedure and corresponding calculations for determining the amount of chemicals needed for neutralizing the effect of acidic chemicals in the containment such as boric, hydrochloric or nitric acids.

Response

The Byron/Braidwood Updated Final Safety Analysis Report (UFSAR), Section 6.1.3.3, "Loss-of-Coolant Accident," describes the process for controlling sump pH. In the event of a large-break Loss-of-Coolant Accident (LOCA), both safety injection (SI) and containment spray (CS) will be initiated. The pH of the final sump solution is independent of the number of trains of ECCS and CS pumps in operation. The final sump pH is determined by the quantity of water and concentration of boron in the Refueling Water Storage Tank (RWST), the Reactor Coolant System (RCS), and the SI accumulators and the quantity of water and concentration of sodium hydroxide (NaOH) educted from the containment spray additive tank (CSAT). The pH of the spray solution is determined by the CS pump suction source and the quantity of NaOH educted from the CSAT. The systems function in the same manner regardless of whether one or two ECCS/CS trains are in operation. The residual heat removal (RHR) pumps will be transferred to the recirculation mode when the RWST reaches the Lo-2 level setpoint. The charging and SI pumps are then manually aligned for the recirculation mode. The CS pumps will continue to operate with suction from the RWST until the RWST reaches the Lo-3 level setpoint. The operator will then manually align the CS pump suction from the RWST to the recirculation sump. NaOH addition will continue until the CSAT reaches the Lo-2 level regardless of CS pump suction source (i.e., RWST or recirculation sump) and the NaOH addition has continued for a minimum of two hours.

The minimum final sump pH following a LOCA for Byron and Braidwood is established by Calculation ATD-0356, "Post LOCA Containment Sump pH," Revision 5, provided as Attachment 2 to this submittal. Calculation ATD-0356 determines the minimum post-LOCA sump pH based on the NaOH quantity, the borated water quantity, and boron concentration in the sump. The calculation differs

for Unit 1 and Unit 2 because Unit 1 is equipped with replacement steam generators and Unit 2 has its original steam generators.

The sump pH is calculated by determining the equilibrium quantities of the boron ionic species and sodium ionic species in the sump. These are calculated based on the amount of boric acid and sodium hydroxide added to the sump, the sump pH, the total water volume in the sump, and the temperature of the sump. Also, the equilibrium quantities of hydronium ion (H_3O^+) and hydroxyl ion (OH^-) are determined based on the temperature-dependent ionic activity product constant of water and the sump pH. The equilibrium pH is determined when the sum of ionic charges of all species pertinent to the boron and water in the solution and the ionic charge of sodium reduces to zero, defined as when the difference is <1E-7.

Calculation ATD-0356 establishes three equations to describe the concentrations of all ionic species. The equilibrium pH is obtained analytically by solving the three equations simultaneously, using the Math Solver in MathCAD 5.0. The pH is verified if the sum of all ionic species reduces to zero (i.e., when the difference is <1E-7). Calculation ATD-0356 determined that a minimum pH of 8.0 would be established by the addition of a minimum of 2500 gallons of 30 wt% NaOH from the CSAT.

Following the initial chemical addition and stabilization of pH, the sump pH would only be impacted by the nitric acid (HNO_3) produced by irradiation of water and air and the hydrochloric acid (HCl) produced by irradiation of electrical cable insulation. The plant-specific application of the guidelines for formation of HNO_3 and HCl provided in NUREG/CR-5950, "Iodine Evolution and pH Control," (Reference 1) is discussed as follows:

The Executive Summary provided in Reference 1 indicates that during a LOCA, the most important acids in the containment will be HNO_3 produced by irradiation of water and air and HCl produced by irradiation or heating of electrical cable insulation. The most important bases in the containment will be cesium hydroxide, cesium borate, and pH additives, such as NaOH. Some aspects of the timing of pH change during an accident can be obtained from the fission product release into containment. Initially, the sump water pH becomes basic because of cesium entering the sump water pool as hydroxide, borate, or carbonate. Once the fission products enter the sump water pool, the radiation dose rate is established, and HNO_3 begins to form and neutralize the basic solutes. A high concentration of fission products that contain basic solutes brings about a high initial pH but also a high radiation dose rate, which results in a relatively high production of HNO_3. For a typical pressurized water reactor (PWR) plant, the maximum duration that a basic pH may be maintained in the absence of pH control additives is approximately 100 hours. This time can be further reduced if boric acid or HCl becomes prominent in the water pool.

Reference 1, Appendix B, provides the total HCl generation rate (g-mol/s) from gamma and beta radiolysis of Hypalon (i.e., electrical cable insulation) as follows:

$$R = R_{\gamma H} + R_{\beta H}$$

Where:

$$R_{\gamma H} = 1.32 \times 10^{-15} \times \frac{E_\gamma \times N}{V}$$

and

$$R_{\beta H} = 8.70 \times 10^{-16} \times \frac{E_\beta \times N}{V}$$

Where:

$E\gamma$ = total gamma energy release rate (Mev/s)
$E\beta$ = total beta energy release rate (Mev/s)
N = total mass of Hypalon cable insulation (lbs)
V = containment free air volume (cc)

For the given mass of Hypalon and containment free air volume, the HCl generation rate is directly proportional to the post-LOCA gamma and beta radiation in the containment.

A review of post-LOCA pH analyses prepared for previously approved alternative source term (AST) license amendments for comparable PWR Stations, including the Seabrook Station, indicates that the reduction in the initial pH of the sump water due to acidic sources such as HNO_3, HI, and HCl is considerably small because of pH control additives and the increased pH resulting from cesium entering the sump water providing a stronger base to neutralize the effect on the acidic sources produced during a LOCA. The Seabrook Station is comparable to the Braidwood and Byron Stations with respect to key parameters that directly impact the sump pH such as:

- thermal power level (i.e., core activity, the primary source of radiation);
- containment size (i.e., gamma air borne dose causing radiolysis of air for HNO3 and cable insulation (HCl)); and
- containment sump (i.e., gamma sump water dose causing radiolysis of water (HNO_3)).

Seabrook performed the 30-day containment sump water pH analysis with and without acids produced from irradiation of water, air, and electric cable insulation. The analysis concluded that the additional acids formed during a LOCA would reduce the initial pH by less than 0.1 pH units (i.e., Reference 2). The NRC staff independently determined that the production of HCl and HNO_3 resulted in a change in pH of less than 0.1 after 30-days (i.e., Reference 3).

Because a sump water pH analysis has not been performed to establish the effect of the post-LOCA acidic sources on the initial sump pH of 8 at the Braidwood and Byron Stations, the following assessment is provided to establish the potential reduction of the sump water pH due to the effect of post-LOCA acids.

A comparison of the critical parameters used in determining the initial sump pH is provided in Table 1, "Comparison of Critical Parameters Determining Initial Sump

Water pH," for Byron, Braidwood and Seabrook. Note that the initial Braidwood and Byron sump water pH is 8, which is less than the Seabrook pH value of 8.6.

Table 1
Comparison of Critical Parameters Determining Initial Sump Water pH

Description of Parameter Determining Initial Sump Water pH	Seabrook Unit 1 *	Braidwood Byron Unit 1	Braidwood Byron Unit 2
Refueling Water Storage Tank Volume Released (Maximum Value) (gal)	428,000	457,904	457,904
Refueling Water Storage Tank Boron Concentration (Maximum Value) (ppm)	2900	2500	2500
Spray Additive Tank Volume Release (Minimum Value) (gal)	8520	2500	2500
Spray Additive Tank Sodium Hydroxide Concentration (Minimum Value) (wt%)	19	30	30
Reactor Coolant System Mass (lbm)	492,200	620,800	562,457
Reactor Coolant System Boron Concentration (Maximum value) (ppm)	4000	2300	2300
Accumulator Volume (Maximum Value) (gal in each of four accumulators)	6596	7217	7217
Accumulator Boron Concentration (Maximum Value) (ppm)	2900	2400	2400
Calculated Sump Water Initial pH	8.6	8.0	8.0

* Values taken from Reference 2

Since the post-LOCA gamma and beta radiations are very important for the irradiation of the sump water, containment air, and cable insulation that cause the acidic source, the parameters that determine the post-LOCA radiation are investigated and compared in Table 2, "Comparison of Design Parameters Determining Post-LOCA Radiation." The core thermal power levels of Seabrook, Braidwood and Byron are the same (i.e., 3,659 MWt). Therefore, the post-LOCA isotopic core inventories in Curie/MWt for these stations will be similar. The post-LOCA core activity release fractions are provided in the Regulatory Guide (RG) 1.183 (i.e., Reference 5), Table 2, "PWR Core Inventory Fraction Released Into Containment," which should be the same for these stations. The parameters that determine the post-LOCA gamma and beta doses that irradiate the containment air, sump water, and cable insulation, include:

- the size of the containment and sump;

- the activity removal mechanisms (mainly of the containment spray and containment/ECCS leakage);
- the spray removal coefficients for elemental iodine and particulates; and
- containment and ECCS leak rates.

The similarity in the major key parameters for these stations, for which small variations are considered insignificant, will produce approximately the same post-LOCA gamma and beta integrated dose in the containment air and sump water. This produces similar quantities of acidic sources, which tend to neutralize the initial sump water pH in the same manner as analyzed for the Seabrook Station. The relatively larger containment dilutes the source and the higher containment leakage rate removes the airborne activity faster at the Braidwood and Byron Stations. This results in a slight reduction in the gamma and beta irradiation of the containment air and cable insulation, and thereby produces a correspondingly slightly smaller amount of nitrogen ions and HCl. The smaller sump volume concentrates the source at the Braidwood and Byron Stations slightly increasing the gamma and beta irradiation of the sump water and thereby produces a correspondingly slightly larger amount of hydrogen ions which combines with the nitrogen ions generated by irradiation of the containment air to produce the HNO_3.

Table 2
Comparison of Design Parameters Determining Post-LOCA Radiation

Description of Parameters Determining Post-LOCA Radiation	Seabrook Unit 1 *	Braidwood Byron Unit 1	Braidwood Byron Unit 2
Core Thermal Power Level (MW_t)	3659	3658	3658
Total Containment Volume (ft^3)	2.704E+06	2.850E+06	2.850E+06
Sprayed Containment Volume (ft^3)	2.309E+06	2.350E+06	2.350E+06
Un-sprayed Containment Volume (ft^3)	3.950E+05	5.000E+05	5.000E+05
Air Transfer Rate Between Containment Regions (cfm)	26,000	130,000	130,000
Containment Spray Removal Rates Before DF is Reached (1/hr) Elemental Iodine Particulate	 20 5.75	 20 6.0	 20 6.0
Containment Leak Rate (%/day) 0-24 hrs >24 hrs	 0.15 0.075	 0.2 0.1	 0.2 0.1
Containment Sump Volume (ft^3)	69,159	58,506	58,506
ECCS Leak rate (gpm)	0.033	1.215	1.215

* Values taken from Reference 3

Using the similarity of the parameters contributing to the post-LOCA gamma and beta doses, the parameters for the acidic sources (including the quantity of

uncovered cable insulation outside of conduit) are compared in Table 3, "Comparison of Critical Parameters for Post-LOCA Acidic Sources." The radiation exposure to covered cable insulation is reduced due to the shielding associated with the steel conduit. The resulting HCl will be confined inside the conduit thereby preventing its intrusion to the sump water due to the sealed conduit, conduit trays, and multi-layer arrangement.

Table 3
Comparison of Critical Parameters for Post-LOCA Acidic Sources

Description of Parameters for Post-LOCA Acidic Sources	Seabrook Unit 1 *	Braidwood Byron Unit 1	Braidwood Byron Unit 2
Mass of Uncovered Electrical Cable Insulation (lbm)	50,000	11,359	11,359
Post-LOCA 30-Day Gamma and Beta Integrated Dose in Containment Sump Water (rads)	3.3E+07	3.3E+07	3.3E+07
Post-LOCA 30-Day Gamma and Beta Integrated Dose in Containment Air (rads)	7.1E+07	7.1E+07	7.1E+07

* Values taken from Reference 2

Based on the similarity of the key parameters in Tables 1, 2, and 3 that control the sump pH, the conclusions of the Seabrook Station pH analysis and the NRC staff determination of sump pH, it is concluded that the 30-day post-LOCA containment sump water pH change due to the acidic source at the Braidwood and Byron Stations would be less than 0.1 pH units and that the final sump water pH would be approximately 7.9, which is considerably higher than the pH of 7 required by the RG 1.183 to eliminate any ionic I_2 conversion of CsI.

<u>ECCS Recirculation Leakage Path:</u>

(2) Provide the basis for assuming the value of 276,000 cc/hr for the ECCS recirculation leakage rate used in the AST LOCA analysis. (NO ANSWER REQUIRED)

The NRC determined that question A.2 does not need to be answered because sufficient detail was provided in Reference 4.

(3) In the ECCS leakage path leading to the Borated Water Storage Tank (BWST), the sump water will mix with the remaining borated water in the tank. Since the BWST water contains between 2300 and 2500 ppm of boron in the form of boric acid, the pH of the mixture of sump and BWST water will have lower pH (most probably well below 7). Lowering the pH of the sump water will cause the conversion of ionic iodine into the elemental form and its corresponding release to the reactor water storage tank (RWST) air space. This effect will increase the total release of radioactive iodine from engineering safety features and cause correspondingly higher radiation doses.

Was this effect included in the licensee's analysis? If it was included, provide its description and the analyses for determining its significance to the overall release of radioactivity in the ECCS recirculation leakage path.

Response

For the purposes of this response, the BWST is referred to as the RWST at Byron and Braidwood Stations. Sump leakage back to the RWST was not considered based on the design and operation of the ECCS. The ECCS is depicted in simplified diagrams ECCS-1, "ECCS System," and ECCS-2, "ECCS Ring," provided as Attachment 3 to this submittal. During the injection phase of the LOCA, water is injected from the RWST into the RCS cold legs. When the RWST Lo-2 level is reached, Emergency Operating Procedure 1/2B(w)EP ES-1.3 is entered to align the ECCS for the recirculation mode of operation, i.e., suction is switched to the containment sump. The steps for aligning the ECCS for the recirculation mode are summarized below (refer to simplified Diagram ECCS-1):

1. The containment sump isolation valves, 1/2SI8811A/B, automatically open on the RWST Lo-2 level signal.
2. Adequate containment sump water level to support ECCS pump operation is verified.
3. The containment sump isolation valves, 1/2SI8811A/B, are verified open.
4. The residual heat removal (RHR) pump suction isolation valves from the RWST (1/2SI8812A/B) are manually closed.
5. The centrifugal charging (CV) pump recirculation valves, 1/2CV8111/8114 and 1/2CV8110/8116, are isolated. It should be noted that the CV pump recirculation valves return to the pump suction and not the RWST.
6. The recirculation flow path to the RWST for the safety injection (SI) pumps is then isolated by closing 1/2SI8814, 1/2SI8920, and 1/2SI8813. At this time, the SI pumps suction is still aligned to the RWST. If RCS pressure is above the shutoff head of the SI pumps, the SI pumps will be shut down.
7. The discharge of the RHR trains is then split by closing 1/2RH8716A/B
8. The suction header for the CV and SI pumps is then cross-tied by opening 1/2SI8807A/B, and 1/2SI8924. The RWST is still the suction source to the CV and SI pumps.
9. The CV and SI pump suction is then aligned to the discharge of the RHR pumps by opening 1/2CV8804A and 1/2SI8804B. At this time, back flow into the RWST is prevented by check valve 1/2SI8926 (on SI pump suction side of 1/2SI8806) and check valve 1/2CV8546 (on CV pump suction side of 1/2CV112D and 1/2CV112E). The check valves are held closed by RHR pump discharge pressure.
10. The RWST is then isolated from the CV and SI pump suctions by closing 1/2CV112D, 1/2CV112E, and 1/2SI8806.

When the above steps are completed, the ECCS system is isolated from the RWST on both the suction side and the SI pump recirculation. The CS pumps are still running with suction aligned to the RWST. The realignment of the CS pumps to the containment sump is performed when the RWST reaches the Lo-3 level setpoint by performing the following steps (refer to simplified Diagram ECCS-2):

1. The CS pump suction from the containment sump isolation valves, 1/2CS009A/B are opened.
2. The CS pump isolation valves from the RWST, 1/2CS001A/B, are closed.

Note that in this lineup the CS pumps do not have a recirculation flow path back to the RWST. A portion of the CS pump discharge flow is directed through the CS pump eductor back to the pump suction in order to inject NaOH.

As described above, once the ECCS has been realigned for the recirculation mode of operation, potential leakage paths back to the RWST are isolated utilizing at least two valves in series, typically a check valve in combination with a motor operated valve (MOV). For a short period of time during realignment of the RHR pump suctions from the RWST to the containment sump, leakage back to the RWST is prevented by a single check valve (i.e., 1/2SI8958A/B) until the RHR pump suction isolation valves from the RWST (i.e., 1/2SI8812A/B) are closed. The ECCS valves are tested in accordance with the Inservice Testing (IST) Program required by Technical Specification 5.5.8, "Inservice Testing Program," to ensure meeting their specified engineered safety position. During testing, check valves 1/2SI8926 and 1/2CV8546, preventing back flow to the RWST, are verified closed utilizing one of the following methods: 1) ultrasonic testing, 2) acoustic testing, or 3) pressure testing. The IST of check valve 1/2SI8958A/B requires a pressure test be performed. The MOVs used to isolate flow paths back to the RWST are also stroke tested to the closed position in accordance with the IST Program. Additionally, MOVs are tested in accordance with the MOV Program used to satisfy the recommendations in Generic Letter (GL) 89-10, "Safety-Related Motor-Operated Valve Testing and Surveillance," dated June 28, 1989, and GL 96-05, "Periodic Verification of Design Basis Capability of Safety-Related Power-Operated Valves," dated September 18, 1996.

Based on the discussion above, back leakage to the RWST is not considered in the analysis, consistent with the current analysis of record.

B. <u>Iodine Removal</u>

(4) Provide the reason why natural deposition of elemental iodine was not considered in your analysis.

<u>Response</u>

RG 1.183, Appendix A, "Assumptions for Evaluating the Radiological Consequences of a LWR Loss-of-Coolant Accident," assumption 3.2 states: "*Reduction in airborne radioactivity in the containment by natural deposition within the containment may be credited. Acceptable models for removal of iodine and aerosols are described in Chapter 6.5.2, 'Containment Spray as a Fission Product Cleanup System,' of the Standard Review Plan (SRP), NUREG-0800 (Ref. A-1) and in NUREG/CR-6189, 'A Simplified Model of Aerosol Removal by Natural Containment' (Ref A.2). The latter model is incorporated into the analysis code RADTRAD (Ref. A-3). The prior practice of deterministically assuming that a 50% plateout of iodine is released from the fuel is no longer acceptable to the NRC staff as it is inconsistent with the characteristics of the revised source term.*"

Table B, "Conformance with Regulatory Guide 1.183 Appendix A (Loss-of-Coolant Accident)," of Attachment 7, "Regulatory Guide Conformance Tables," included in Reference 4 provided the following comment: "*For B/B, the RADTRAD computer program, including the Powers Natural Deposition algorithm based on NUREG/CR-6189, is used for modeling aerosol deposition in Containment. No natural deposition is assumed for elemental or organic iodine. The lower bound (10%) level of deposition credit is used.*"

RG 1.183, Appendix A, assumption 3.2 does not require crediting natural deposition for elemental iodine. RG 1.183 states that natural deposition of airborne radioactivity may be credited. EGC did not choose to credit natural deposition of elemental iodine because elemental iodine only makes up approximately 4.85% of the total iodine released. Neglecting credit for deposition of elemental iodine results in a more conservative estimate of onsite and offsite dose consequences because more iodine is available to be released.

References

(1) NUREG/CR-5950, Iodine Evolution and pH Control," December 1992

(2) Letter from M. E. Warner (FPL Energy Seabrook, LLC) to NRC, "Seabrook Station Response to Request for Additional Information Regarding License Amendment Request 03-02," dated May 24, 2004

(3) Letter from V. Nerses (NRC) to M. E. Warner (FPL Energy Seabrook, LLC), "Seabrook Station, Unit No. 1 – Issuance of Amendment Re: Alternative Source Term," dated February 24, 2005

(4) Letter from K. R. Jury (Exelon Generation Company, LLC), to NRC, "Request for License Amendment Related to Application of alternative Source Term," dated February 15, 2005,

(5) Regulatory Guide (RG) 1.183, "Alternative Radiological Source Terms for Evaluating Design Basis Accidents at Nuclear Power Plants," dated July 2000

Attachment 2

Response to NRC Request for Additional Information

BRAIDWOOD STATION
UNITS 1 AND 2

Docket Nos. STN 50-456 and STN 50-457
License Nos. NPF-72 and NPF-77

and

BYRON STATION
UNITS 1 AND 2

Docket Nos. STN 50-454 and STN 50-455
License Nos. NPF-37 and NPF-66

Calculation ATD-0356, "Post LOCA Containment Sump pH," Revision 5

COMMONWEALTH EDISON COMPANY
CALCULATION TABLE OF CONTENTS

	PROJECT NO. *9135-198*	
CALCULATION NO. *ATD-0356*	REV. NO. 5	PAGE NO. 5
DESCRIPTION	PAGE NO.	SUB-PAGE NO.

TITLE PAGE	*T1, 1*	
REVISION SUMMARY	*2-4*	
TABLE OF CONTENTS	*5*	
1.0 PURPOSE/OBJECTIVE	*6*	
2.0 METHODOLOGY AND ACCEPTANCE CRITERIA	*6*	
3.0 ASSUMPTIONS	*6-7*	
4.0 DESIGN INPUT	*7-9*	
5.0 REFERENCES	*10-11*	
6.0 CALCULATIONS	*11, 13-40*	
7.0 SUMMARY AND CONCLUSIONS	*12*	
ATTACHMENTS	*n/a*	
APPENDIX	*A1-A5*	

COMMONWEALTH EDISON COMPANY

1.0 PURPOSE/OBJECTIVE

The purpose of this calculation is to determine the minimum final containment recirculation sump pH following a LOCA. The result of the calculation will be used to update the design basis for the Byron/Braidwood post LOCA containment sump pH for Units 1 and 2. The Unit 1 results address the impact of the replacement steam generator (RSG) project.

2.0 METHODOLOGY and ACCEPTANCE CRITERIA

The minimum post LOCA containment recirculation sump pH is determined based on the sodium hydroxide (NaOH) quantity, the borated water quantity, and boron concentration in the sump for both Units 1 and 2. The calculation differs for each unit because Unit 1 is equipped with a new steam generator and Unit 2 has its original steam generator.

The sump pH will be calculated by determining the equilibrium quantities of the boron ionic species and sodium ionic species in the sump. These can be calculated based on the amount of boric acid and sodium hydroxide added to the sump, the sump pH, the total water volume in the sump, and the temperature of the sump. Also, the equilibrium quantities of hydronium ion (H_3O^+) and hydroxyl ion (OH^-) can be determined based on the temperature-dependent ionic activity product constant of water and the sump pH. The equilibrium pH is determined when the sum of ionic charges of all species pertinent to the boron and water in the solution and the ionic charge of sodium reduces to zero (defined when the difference is < 1E-7).

This calculation will establish three equations to describe the concentrations of all the ionic species. The equilibrium pH will be obtained analytically by solving the three equations simultaneously, using the Math Solver in MathCAD 5.0. The pH is verified if the sum of all ionic species reduces to zero (defined when the difference is < 1E-7).

The purpose of this calculation is to determine the minimum containment recirculation sump pH. Technical Specification 3/4.6.2.2 Bases states that the post LOCA sump pH shall be 8.0 to 11.0. This will be used as the acceptance criteria for this calculation.

3.0 ASSUMPTIONS

1) The safety injection accumulator water temperature is assumed to be at 90°F. This is a conservative estimate of the minimum temperature of this water and will result in a higher density of water (thus the mass of boron).

2) All RCS, RWST, CSAT, and SI accumulator volumes are conservatively assumed to reach the containment recirculation sump.

COMMONWEALTH EDISON COMPANY

3.0 ASSUMPTIONS, cont'd

3) The extended form of the Debye-Huckel equation is applicable to the range of ionic strength considered in this calculation.

4) The equation for the molal equilibrium quotient, Q_{11}, is based on ionic strength derived from molality. The ionic strength determined in this calculation is based on molarity. In dilute solutions, molality and molarity are approximately equal. Because this calculation deals with dilute solutions, molality and molarity are assumed to be equal.

5) The approximate ionic radii used in this calculation are those at 25°C. The effect of temperature on the approximate ionic radii is assumed to be negligible.

6) All species and ions in solution are assumed to be in equilibrium; therefore, the results are based on steady state analysis.

7) Not used.

8) Not used.

9) The density of the solution in the containment recirculation sump (containing both borated water and NaOH) is assumed to be the density of pure water at the applicable sump temperature stated in Design Input 15. Increasing the solution from a specific gravity of 1.00 to 1.01 (conservative maximum based on level of boron and caustic in the sump) yielded a negligible difference in the sump pH.

4.0 DESIGN INPUTS

1) The density of water at atmospheric pressure and various temperatures used in the calculation for the areas noted is as follows (interpolated as necessary from Ref. 1, page 4-4):

Use	Temperature, °F	ρ, lb/ft^3
Units1,2 containment recirculation sump	185 (Design Input 15)	60.45
SI accumulator	90 (Assumption 1)	62.12
RWST	35 (Design Input 5)	62.42

COMMONWEALTH EDISON COMPANY

4.0 DESIGN INPUTS cont'd

2) The pressure, temperature, and density of water used in the RCS mass determination are shown below. The RCS nominal pressure and temperature conditions are used and the density is interpolated from Ref. 2, based on these conditions.

	Pressure, psig	Temperature, °F	ρ, lb/ft^3
Unit 1	2,235 (Ref. 3)	569.1 (Ref. 25)	45.58
Unit 2	2,235 (Ref. 3)	569.1 (Ref. 25)	45.58

3) The maximum boron concentration in the RWST is 2,500 ppm (Ref. 6 with clarification on fuel cycle being at or greater than 6 for both units at each station from Ref. 7).

4) The maximum RWST volume is 457,904 gal (Ref. 8). This is the full capacity of the RWST defined as 100% top of overflow pipe.

5) The RWST water temperature is at its Technical Specification minimum of 35°F (Ref. 6). This is conservative because the density of water (thus the mass of boron) is higher at lower temperatures.

6) The maximum boron concentration in the SI accumulators is 2,400 ppm (Ref. 9 with clarification on fuel cycle being at or greater than 6 for both units at each station from Ref. 7).

7) The maximum SI accumulator volume is 7,217 gal per each of the four SI accumulators (Ref. 10).

8) Per Ref. 11, a 30-36 wt% NaOH solution can be used in the CSAT. A 30 wt% NaOH solution is used in this calculation because it is conservative; resulting in a smaller mass of NaOH addition to the sump, and therefore, a lower sump pH.

9) The minimum NaOH solution addition from the CSAT is 2,500 gallons per Appendix A. Appendix A calculates where the CSAT LO-2 level alarm must actuate to assure a minimum of 2500 gallons of NaOH is delivered to the containment spray system. Reference A.5.14 determines the CSAT LO-2 level setpoint necessary for alarm actuation at the level calculated in Appendix A.

10) The maximum boron concentration in the RCS is 2,300 ppm (Ref. 12).

11) The maximum RCS volume of Unit 2 is 12,340 ft^3 (Ref. 26). The maximum volume is defined as hot, 0% tubes plugging and includes the steam generator pressurizer steam volume.

COMMONWEALTH EDISON COMPANY

4.0 DESIGN INPUTS cont'd

12) The maximum RCS volume of Unit 1 is 13,620 ft^3 (Ref. 26). The maximum volume is defined as hot, 0% tubes plugging and includes the steam generator pressurizer steam volume.

13) The steam generator pressurizer volume for Units 1 and 2 is 1,800 ft^3 (Ref. 15). The steam generator pressurizer volume increases 1.6% from cold to hot conditions (Ref. 27). This yields a hot steam generator pressurizer volume of 1,828.8 ft^3 (1.016 x 1,800 ft^3).

14) The maximum steam generator pressurizer water volume for Units 1 and 2 is 1,656 ft^3 (Ref. 16). The steam generator pressurizer water volume increases 1.6% from cold to hot conditions (Ref. 27). This yields a hot steam generator pressurizer water volume of 1,682.5 ft^3 (1.016 x 1,656 ft^3).

15) A range of containment recirculation sump temperatures from the data and curves in Ref. 27 was examined. The sump temperatures in Ref. 27 are maximum values, and lower temperatures are also possible post-LOCA. The total temperature range for the three scenarios in Ref. 27 over the time period required to drain the minimum CSAT volume were reviewed (approximately 165 - 260°F), down to a temperature of 150°F (to account for lower temperatures). (Note that the time period to drain the minimum CSAT tank volume ranges from: a) 2,500 gal, or the minimum CSAT volume ÷ 120 gpm, or 2 eductors at maximum flow, = 21 min to b) 2,500 gal ÷ 55 gpm, or 1 eductor at minimum flow, = 45 min.) Through sample runs, it was determined that a temperature of approximately 185°F minimizes the sump pH. Also, the sump pH throughout the temperature range of 150 - 260°F did not differ from the pH results at 185°F by more than +0.04. A sump temperature of 185°F was, therefore, selected.

16) The approximate effective ionic radii of H+ and OH- in aqueous solutions at 25°C are 9.0 and 3.5 respectively (Ref. 18, p. 8.4).

17) The Debye-Huckel constants for Units 1 and 2 at the containment recirculation sump temperature of 185°F (see Design Input 15) are A = 0.5842 and B = 0.3440 (Ref. 18).

18) The molecular weight of boron is 10.81 lb/lbmol (Ref. 19). The molecular weight of NaOH is 39.997 lb/lbmol (Ref. 19). The molecular weight of boric acid is 61.84 lb/lbmol (Ref. 19).

19) The temperature of the NaOH solution in the CSAT is 130°F. This is the maximum temperature for the area that the CSAT is located in per the EQ design basis document (Ref. 20). This is conservative because the density of NaOH solution (thus the mass of NaOH) is lower at higher temperatures.

20) The density of the 30% NaOH solution at 130°F is 10.898 lb/gal (calculated / interpolated from Ref. 19 using 8.345 lb/gal per 1 gm/cm^3 conversion factor).

COMMONWEALTH EDISON COMPANY

CALCULATION NO. : ATD-0356	PROJECT NO. 9135-198	PAGE NO. 10

5.0 REFERENCES

1) "Cameron Hydraulic Data", C. C. Heald, Ingersoll Rand, Seventeenth Edition, 1988.

2) "Steam Tables", American Society of Mechanical Engineers, Sixth Edition, 1993.

3) Calculation 222-7720-A19, Revision 3.

4) Deleted.

5) Deleted.

6) Braidwood Technical Specification 3/4.5.5, Amendment No. 55 - Unit 2, 56 - Unit 1; Byron Technical Specification 3/4.5.5, Amendment No. 65.

7) "5 Year Nuclear Division Planned Outage Schedule", Revision 34, 9/26/96.

8) NDIT 960009, Revision 0, verified 10/23/96 in "Status Change for NDIT 960009" letter from H. Kim to R. Peterson (NDIT references calculation ATD-0111 Revision 2).

9) Braidwood Technical Specification 3/4.5.1, Amendment No. 55 - Unit 2, 56 - Unit 1; Byron Technical Specification 3/4.5.1, Amendment No. 65.

10) Braidwood Technical Specification Bases 3/4.5.1, Amendment No. 25; Byron Technical Specification Bases 3/4.5.1, Amendment No. 38.

11) Braidwood Technical Specification 3/4.6.2.2, Amendment No. 4; Byron Technical Specification 3/4.6.2.2, Amendment No. 14.

12) NDIT 960181, Revision 0 (NDIT references "Safety Parameter Interaction List for ComEd Braidwood Cycle 7" dated 10/96).

13) Deleted.

14) Deleted.

15) NDIT 950028, Revision 1 (NDIT references USFAR Table 5.4-9 and Westinghouse calc note CN-TA-93-182 Rev. 0, p. 12).

16) Braidwood Technical Specification Bases 3/4.4.3, Amendment No. 33; Byron Technical Specification Bases 3/4.4.3, Amendment No. 44.

17) Deleted.

COMMONWEALTH EDISON COMPANY

CALCULATION NO. : ATD-0356	PROJECT NO. 9135-198	PAGE NO. 11

5.0 REFERENCES cont'd

18) "Lange's Handbook of Chemistry", J. A. Dean, McGraw-Hill Company, Fourteenth Edition, 1992.

19) "Perry's Chemical Engineering Handbook", Sixth Edition, McGraw-Hill Company.

20) EQ Design Basis Document PMED-P-BB-EQ-DBD-00.

21) "Basic for Instrument Scaling Methodology", TID-E/I&C-21, Rev. 0, 11/5/93.

22) "Acidity Measurements in Elevated Temperatures. VI. Boric Acid Equilibria", R. E. Mesmer, C. F. Baes, Jr. and F. H. Sweeton, Inorganic Chemistry, Vol. 11, No. 3, 1972.

23) "Chemistry of Natural Waters", S. D. Faust and O. M. Aly, Ann Arbor Science Publishers, Inc., 1981.

24) "Aquatic Chemistry", W. Stumm and J. J. Morgan, John Wiley & Sons, 1970.

25) NDIT 960119, Revision 3 (NDIT References NFS NDIT 960206, Revision 2 "Revised Braidwood Unit 1 Cycle 7 Reload Design Key Parameter Checklist").

26) NDIT 970196, Revision 0 (NDIT calculates hot RCS volumes based on cold RCS volumes).

27) NDIT 960159, Revision 5 (NDIT references WCAP-10326-A and Framatome calculation "Containment LBLOCA Analysis-Long Term Cooling" document number 32-1266155-02 dated 11/19/97).

6.0 CALCULATIONS

The detailed calculations for the minimum post-LOCA containment recirculation sump pH for Unit 2 (with its original steam generator) are shown first (pages 13-26). The detailed calculations for the minimum post-LOCA containment recirculation sump pH for Unit 1 (with its replacement steam generator) are shown second (pages 27-40).

The rest of this page is intentionally left blank.

COMMONWEALTH EDISON COMPANY

CALCULATION NO. : ATD-0356	PROJECT NO. 9135-198	PAGE NO. 12

7.0 SUMMARY AND CONCLUSIONS

1) Based on the minimum NaOH quantity and the maximum borated water quantity and boron concentration in the recirculation sump, the post LOCA minimum containment recirculation sump equilibrium pH for Unit 2 (with original steam generator) is 8.0.

2) Based on the minimum NaOH quantity and the maximum borated water quantity and boron concentration in the recirculation sump, the post LOCA minimum containment recirculation sump equilibrium pH for Unit 1 (with replacement steam generator) is 8.0.

The rest of this page is intentionally left blank.

6.0 CALCULATIONS - UNIT 2

$V_{RCStot} := 12340 \cdot ft^3$ Maximum Total RCS volume (Design Input 11)

$V_{PRES} := 1828.8 \cdot ft^3$ Steam generator pressurizer volume (Design Input 13)

$V_{PRESwat} := 1682.5 \cdot ft^3$ Maximum steam generator pressurizer water volume (Design Input 14)

$T_{RCSavg} := 569.1$ Average RCS temperature, F (Design Input 2)

$P_{PRES} := 2235$ Steam generator pressurizer pressure, psig (Design Input 2)

$V_{PRESstm} := V_{PRES} - V_{PRESwat}$

$V_{PRESstm} = 146.3 \cdot ft^3$ Minimum pressurizer steam volume

$V_{RCSwat} := V_{RCStot} - V_{PRESstm}$

$V_{RCSwat} = 1.21937 \cdot 10^4 \cdot ft^3$ Maximum RCS borated water volume

$\rho_{RCSwat} := 45.58 \cdot \frac{lb}{ft^3}$ RCS water density at nominal pressure and temperature shown above (Design Input 2)

$a_H := 9.0$ Ionic radius of H^+ (Design Input 16)

$a_{OH} := 3.5$ Ionic radius of OH- (Design Input 16)

$Mwt_B := \frac{10.81}{mole}$ Molecular weight of boron, B (Design Input 18)

$Mwt_{NaOH} := \frac{39.997}{mole}$ Molecular weight of sodium hydroxide, NaOH (Design Input 18)

$V_{rwst} := 457904 \cdot gal$ Maximum RWST borated water volume (Design Input 4)

$V_{accu} := 28868 \cdot gal$ Max. borated water quantity in accumulators, 4 x 7,217 gal each (Design Input 7)

$\rho_{NaOH} := 10.898 \cdot \frac{lb}{gal}$ NaOH solution density at 130F and 30 wt % NaOH (Design Input 20)

$V_{NaOH} := 2500 \cdot gal$ Minimum NaOH solution volume in spray additive tank (Design Input 9)

6.0 CALCULATIONS - UNIT 2 cont'd

$B_{rwst} := \frac{2500}{1 \cdot 10^6}$ RWST boron concentration (Design Input 3)

$B_{rcs} := \frac{2300}{1 \cdot 10^6}$ RCS boron concentration (Design Input 10)

$B_{accu} := \frac{2400}{1 \cdot 10^6}$ Accumulator boron concentration (Design Input 6)

$\rho_{w185} := 60.45 \cdot \frac{lb}{ft^3}$ Density of water @ 185 °F (Design Input 1)

μ Ionic strength in sump solution

γ_H activity coefficient of H^+ ion

γ_{OH} activity coefficient of OH- ion

k_w ionic activity product of water

$T := 358.15$ K Sump temperature in Kelvin (or 185°F) (Design Input 15)

$A := 0.5842$ $B := 0.3440$ Debye-Huckel Constants (Design Input 17)

CBEB borated water charge balance error

CBEN sodium charge balance error

z_i Ionic charge of species i

$Mwt_{H3BO3} := \frac{61.84}{mole}$ Molecular weight of boric acid (Design Input 18)

Calculate SI Accumulator borated water density at 90°F and a boron conc. of 2400 ppm

From Eq. D-10 of Reference 21, calculate the mass fraction of the boric acid solution (expressed as ppm w/o the 10^6 factor):

$$ppm_{H3BO3accu} := B_{accu} \cdot \frac{Mwt_{H3BO3}}{Mwt_B}$$

$$ppm_{H3BO3accu} = 0.01372951$$

6.0 CALCULATIONS - UNIT 2 cont'd

From Eq. D-11 of Reference 21, calculate the weight % of boric acid within the solution

$\%C_{baccu} := ppm_{H3BO3accu} \cdot 100$

$\%C_{baccu} = 1.37295097$

From Eq. D-12 of Reference 21, calculate the weight density of the solution, ρ_{BAaccu}

$\rho_{w90} := 62.12 \cdot \frac{lb}{ft^3}$ Density of water @ 90 °F (Design Input 1)

$\rho_{BAaccu} := \rho_{w90} \cdot \left[1 + \left(0.0035 \cdot \%C_{baccu}\right)\right]$

$\rho_{BAaccu} = 62.418507 \cdot \frac{lb}{ft^3}$

Calculate borated water quantity in Accumulators, M_{accu}, based on accumulator volume of 28,868 gallons

$M_{accu} := V_{accu} \cdot \rho_{BAaccu}$

$M_{accu} = 2.40878657 \cdot 10^5 \cdot lb$ (Based on the conversion $1 \cdot gal = 0.13368056 \cdot ft^3$)

Calculate RCS borated water density at 569.1°F and 2235 psig and a boron conc. of 2300 ppm

$ppm_{H3BO3rcs} := B_{rcs} \cdot \frac{Mwt_{H3BO3}}{Mwt_B}$

$ppm_{H3BO3rcs} = 0.01315745$

$\%C_{brcs} := ppm_{H3BO3rcs} \cdot 100$

$\%C_{brcs} = 1.31574468$

$\rho_{BArcs} := \rho_{RCSwat} \cdot \left[1 + \left(0.0035 \cdot \%C_{brcs}\right)\right]$

$\rho_{BArcs} = 45.78990075 \cdot \frac{lb}{ft^3}$

6.0 CALCULATIONS - UNIT 2 cont'd

Calculate borated water quantity in RCS, M_{rcs}

$M_{rcs} := V_{RCSwat} \cdot \rho_{BArcs}$

$M_{rcs} = 5.58348313 \cdot 10^5 \cdot lb$ (Based on the conversion $1 \cdot gal = 0.13368056 \cdot ft^3$)

Calculate RWST borated water density at 35°F and a boron conc. of 2500 ppm

$ppm_{H3BO3rwst} := B_{rwst} \cdot \frac{Mwt_{H3BO3}}{Mwt_B}$

$ppm_{H3BO3rwst} = 0.01430157$

$\%C_{brwst} := ppm_{H3BO3rwst} \cdot 100$

$\%C_{brwst} = 1.43015726$

$\rho_{w35} := 62.42 \cdot \frac{lb}{ft^3}$ Density of water @ 35 °F (Design Input 1)

$\rho_{BArwst} := \rho_{w35} \cdot \left[1 + \left(0.0035 \cdot \%C_{brwst}\right)\right]$

$\rho_{BArwst} = 62.73244646 \cdot \frac{lb}{ft^3}$

Calculate borated water quantity in RWST, M_{rwst} , based on RWST volume of 457,904 gallons

$M_{rwst} := V_{rwst} \cdot \rho_{BArwst}$

$M_{rwst} = 3.84003259 \cdot 10^6 \cdot lb$ (Based on the conversion $1 \cdot gal = 0.13368056 \cdot ft^3$)

Calculate Boron mass, M_B, in RWST, Accumulators, RCS :

$M_B := M_{rwst} \cdot B_{rwst} + M_{accu} \cdot B_{accu} + B_{rcs} \cdot M_{rcs}$

$M_B = 1.14623914 \cdot 10^4 \cdot lb$

6.0 CALCULATIONS - UNIT 2 cont'd

Calculate NaOH mass, M_{NaOH}, in 30% solution (Design Input 8)

$M_{NaOHsln} := V_{NaOH} \rho_{NaOH}$

$M_{NaOH} := M_{NaOHsln} \cdot 0.3$

$M_{NaOH} = 8.1735 \cdot 10^3 \cdot lb$

Calculate net water mass inside containment, M_{H20}

$M_{H20} := (M_{rwst} + M_{accu} + M_{rcs} + M_{NaOHsln}) - M_B - M_{NaOH}$

$M_{H20} = 4.64686867 \cdot 10^6 \cdot lb$

Calculate water Volume, V_w inside containment (at 185°F per Design Input 15):

$V_w := \frac{M_{H20}}{\rho_{w185}}$

$V_w = 2.17675215 \cdot 10^6 \cdot liter$ Based on the conversion ($1 \cdot ft^3 = 28.31684659 \cdot liter$)

Calculate Molar concentration of boron, Mol_B, and NaOH, Mol_{NaOH}

$Mol_B := \frac{M_B}{V_w \cdot Mwt_B}$ $Mol_{NaOH} := \frac{M_{NaOH}}{V_w \cdot Mwt_{NaOH}}$

$Mol_B = 0.22095625 \cdot \frac{gm \cdot mole}{liter}$ $Mol_{NaOH} = 0.04258311 \cdot \frac{gm \cdot mole}{liter}$

6.0 CALCULATIONS - UNIT 2 cont'd

Set up three equations to solve for equilibrium sump pH :

NOTE: For MathCAD purposes, the concentrations of various species are denoted as follows in all of the following equations:

$[H_3BO_3]$ = H3BO3
$[B(OH)_4^-]$ = BOH_4
$[B_2(OH)_7^-]$ = $B2OH_7$
$[B_3(OH)_{10}^-]$ = $B3OH_{10}$
$[B_4(OH)_{14}^-]$ = $B4OH_{14}$
$[H^+]$ = H
$[OH^-]$ = OH
$[Na^+]$ = Na

Condition 1: The sum of the molar concentration for all the boron ionic species should be equal to the molar concentration of boron, Mol_B, in the sump. This yields Equation 1 below.

$$Mol_B = H3BO3 + BOH_4 + 2 \cdot B2OH_7 + 3 \cdot B3OH_{10} + 4 \cdot B4OH_{14} \quad \text{Eq. 1}$$

Condition 2 : The borated water charge balance error, CBEB, represents the sum of the ionic charges of all species pertinent to boron and water in solution. The ionic charge of H^+ is 1. The ionic charge of OH^-, $B(OH)_4^-$, $B_2(OH)_7^-$, and $B_3(OH)_{10}^-$ is -1. The ionic charge of $B_4(OH)_{14}^-$ is -2. Ionic charge values are from Ref. 22. CBEB is then defined as follows:

$$CBEB = H - OH - BOH_4 - B2OH_7 - B3OH_{10} - 2 \cdot B4OH_{14}$$

The sodium charge balance error, CBEN, represents the ionic charge of sodium (defined as +1 per Ref. 18) and is defined as follows:

$$CBEN = Na$$

Electroneutrality requires that the sum of $c_i z_i$ (c is molarity and z is ionic charge) of all species and ions in solution equals 0, thus the sum of CBEB and CBEN equals 0. This yields Equation 2 below.

$$-Na = H - OH - BOH_4 - B2OH_7 - B3OH_{10} - 2 \cdot B4OH_{14} \quad \text{Eq. 2}$$

6.0 CALCULATIONS - UNIT 2 cont'd

Condition 3 : The ionic strength, I, of solution is calculated as follows:

$I = 0.5(c_1z_1^2 + c_2z_2^2 + \cdots\cdots + c_nz_n^2)$ (Ref. 18)

where c is molarity and z is ionic charge. Utilizing the ionic charges defined in the Condition 2 section with the above equation yields Equation 3 below.

$$2 \cdot I = Na + H + OH + BOH_4 + B2OH_7 + B3OH_{10} + (B4OH_{14}) \cdot 4 \qquad \text{Eq. 3}$$

All the variables in Eqs. 1, 2 and 3 will be defined in terms of pH, H_3BO_3, and I.

Per Ref. 22, the boron ionic species can be defined from equilibrium quotients as follows:

$$BOH_4 = Q_{11} \cdot H3BO3 \cdot OH$$

$$B2OH_7 = Q_{21} \cdot H3BO3^2 \cdot OH$$

$$B3OH_{10} = Q_{31} \cdot H3BO3^3 \cdot OH$$

$$B4OH_{14} = Q_{42} \cdot H3BO3^4 \cdot OH^2$$

Per Ref. 22, the molal equilibrium quotients, Q_{11}, Q_{21}, Q_{31} and Q_{42} are defined as follows and can be reduced , given: $T = 358.15$ K

$$Q_{11} = 10^{\left[\frac{1573.21}{T} + 28.6059 + 0.012078 \cdot T - 13.2258 \cdot \log(T) + (0.3250 - 0.00033 \cdot T) \cdot I - 0.0912 \cdot I^{1.5}\right]}$$

$$Q_{11} = 10^{\left[3.544684 + (0.206811) \cdot I - 0.0912 \cdot I^{1.5}\right]}$$

$$Q_{21} := 10^{\left(\frac{2756.1}{T} - 18.966 + 5.835 \cdot \log(T)\right)}$$

$$Q_{21} = 4.288921 \cdot 10^3$$

6.0 CALCULATIONS - UNIT 2 cont'd

$$Q_{31} := 10^{\left(\frac{3339.5}{T} - 8.084 + 1.497 \cdot \log(T)\right)}$$

$$Q_{31} = 1.15808569 \cdot 10^{5}$$

$$Q_{42} := 10^{\left(\frac{12820.0}{T} - 134.56 + 42.105 \cdot \log(T)\right)}$$

$$Q_{42} = 5.94241376 \cdot 10^{8}$$

Per Ref. 23, the equilibrium quantities of the H and OH ions are defined as follows:

$\gamma_H[H^+]\gamma_{OH}[OH^-] = k_w$ and $\gamma_H[H^+] = 10^{-pH}$

yielding:

$$H = \frac{10^{-pH}}{\gamma_H} \qquad OH = \frac{k_w}{H \cdot \gamma_H \gamma_{OH}}$$

Per Ref. 18, individual activity coefficient, γ_i, may be estimated using the following equation of the Debye-Huckel theory:

$$-\log \gamma_i = \frac{A \cdot z_i^2 \cdot I^{0.5}}{1 + B \cdot a_i \cdot I^{0.5}}$$

yielding:

$$\gamma_H = 10^{-\left[\frac{A \cdot 1^2 \cdot I^{0.5}}{\left(1 + B \cdot a_H \cdot I^{0.5}\right)}\right]} \qquad \gamma_{OH} = 10^{-\left[\frac{A \cdot (-1)^2 \cdot I^{0.5}}{\left(1 + B \cdot a_{OH} \cdot I^{0.5}\right)}\right]}$$

Per Ref. 24, the ionic activity product constant of water, k_w, is calculated as follows:

$$pk_w = -\log k_w = \frac{4470.99}{T} - 6.0875 + 0.01706 \cdot T$$

6.0 CALCULATIONS - UNIT 2 cont'd

yielding:

$$k_w := 10^{-\left(\frac{4470.99}{T} - 6.0875 + 0.01706 \cdot T\right)}$$

Given : $T = 358.15$ $a_H = 9$ $a_{OH} = 3.5$ $A = 0.5842$ $B = 0.344$

$$\gamma_H = 10^{-\left[\frac{(0.5842) \cdot I^{0.5}}{\left[1 + (0.3440) \cdot 9.0 \cdot I^{0.5}\right]}\right]} \qquad \gamma_{OH} = 10^{-\left[\frac{(0.5842) \cdot I^{0.5}}{\left[1 + (0.3440) \cdot 3.5 \cdot I^{0.5}\right]}\right]}$$

$$k_w = 3.11811884 \cdot 10^{-13}$$

Substitute γ_H, γ_{OH} and k_w into the expressions for H and OH to obtain :

$$H = \frac{10^{-pH}}{\gamma_H} = \frac{10^{-pH}}{10^{-\left[\frac{(0.5842) \cdot I^{0.5}}{\left[1 + (0.3440) \cdot 9.0 \cdot I^{0.5}\right]}\right]}}$$

$$OH = \frac{k_w}{H \cdot \gamma_H \gamma_{OH}} = \frac{k_w}{\frac{10^{-pH}}{\gamma_H} \cdot \gamma_H \gamma_{OH}} = \frac{k_w}{10^{-pH} \cdot \gamma_{OH}} = \frac{3.11811884 \cdot 10^{-13}}{10^{-pH} \cdot 10^{-\left[\frac{(0.5842) \cdot I^{0.5}}{\left[1 + (0.3440) \cdot 3.5 \cdot I^{0.5}\right]}\right]}}$$

Using the expressions and values developed for $Q_{11}, Q_{21}, Q_{31}, Q_{42}$, H and OH with Equations 1, 2 and 3, and given the following, all unknowns can be determined.

$$Mol_B = 0.22095625 \cdot \frac{gm \cdot mole}{liter} \qquad Mol_{NaOH} = 0.04258311 \cdot \frac{gm \cdot mole}{liter}$$

$$Na := Mol_{NaOH} \qquad Na = 0.04258311 \cdot \frac{gm \cdot mole}{liter}$$

Also for simplicity, define a variable V for H_3BO_3. Equations 1, 2, and 3 can be rewritten in terms of three variables (namely pH, I and V). With three equations and three variables, the variables can be solved simultaneously.

The forms of the equations to be solved are shown on the next page. The Math Solver in MathCAD 5.0 ; used to solve the equations.

6.0 CALCULATIONS - UNIT 2 cont'd

Guess values:

$I := 0.045200 \qquad V := 0.1426000 \qquad pH := 8.05$

Given

Equation 1

$$0.22095625 = V + 10^{\left[3.544684 + (0.206811)\cdot I - 0.0912\cdot I^{1.5}\right]}\cdot V\cdot\frac{k_w}{10^{-pH}\cdot 10^{-\left[\frac{A\cdot I^{0.5}}{\left[1+\left(B\cdot 3.5\cdot I^{0.5}\right)\right]}\right]}} + \left(2\cdot Q_{21}\right)\cdot V^2\cdot\frac{k_w}{10^{-pH}\cdot 10^{-\left[\frac{A\cdot I^{0.5}}{\left[1+\left(B\cdot 3.5\cdot I^{0.5}\right)\right]}\right]}} + \left(3\cdot Q_{31}\right)\cdot V^3\cdot\frac{k_w}{10^{-pH}\cdot 10^{-\left[\frac{A\cdot I^{0.5}}{\left[1+\left(B\cdot 3.5\cdot I^{0.5}\right)\right]}\right]}} + \left(4\cdot Q_{42}\right)\cdot V^4\cdot\left[\frac{k_w}{10^{-pH}\cdot 10^{-\left[\frac{A\cdot I^{0.5}}{\left[1+\left(B\cdot 3.5\cdot I^{0.5}\right)\right]}\right]}}\right]^2$$

Equation 2

$$0.04258311 = \frac{10^{-pH}}{10^{-\left[\frac{A\cdot I^{0.5}}{\left[1+\left(B\cdot 9.0\cdot I^{0.5}\right)\right]}\right]}} - \left[\frac{k_w}{10^{-pH}\cdot 10^{-\left[\frac{A\cdot I^{0.5}}{\left[1+\left(B\cdot 3.5\cdot I^{0.5}\right)\right]}\right]}}\right] - \left[10^{\left[3.544684 + (0.206811)\cdot I - 0.0912\cdot I^{1.5}\right]}\cdot V\cdot\frac{k_w}{10^{-pH}\cdot 10^{-\left[\frac{A\cdot I^{0.5}}{\left[1+\left(B\cdot 3.5\cdot I^{0.5}\right)\right]}\right]}}\right] - \left[Q_{21}\cdot V^2\cdot\frac{k_w}{10^{-pH}\cdot 10^{-\left[\frac{A\cdot I^{0.5}}{\left[1+\left(B\cdot 3.5\cdot I^{0.5}\right)\right]}\right]}}\right] - \left[Q_{31}\cdot V^3\cdot\frac{k_w}{10^{-pH}\cdot 10^{-\left[\frac{A\cdot I^{0.5}}{\left[1+\left(B\cdot 3.5\cdot I^{0.5}\right)\right]}\right]}}\right] - \left[\left(2\cdot Q_{42}\right)\cdot V^4\cdot\left[\frac{k_w}{10^{-pH}\cdot 10^{-\left[\frac{A\cdot I^{0.5}}{\left[1+\left(B\cdot 3.5\cdot I^{0.5}\right)\right]}\right]}}\right]^2\right]$$

Equation 3

$$2\cdot I = 0.04258311 + \frac{10^{-pH}}{10^{-\left[\frac{A\cdot I^{0.5}}{\left[1+\left(B\cdot 9.0\cdot I^{0.5}\right)\right]}\right]}} + \left[\frac{k_w}{10^{-pH}\cdot 10^{-\left[\frac{A\cdot I^{0.5}}{\left[1+\left(B\cdot 3.5\cdot I^{0.5}\right)\right]}\right]}}\right] + \left[10^{\left[3.544684 + (0.206811)\cdot I - 0.0912\cdot I^{1.5}\right]}\cdot V\cdot\frac{k_w}{10^{-pH}\cdot 10^{-\left[\frac{A\cdot I^{0.5}}{\left[1+\left(B\cdot 3.5\cdot I^{0.5}\right)\right]}\right]}}\right] + \left[\left(Q_{21}\right)\cdot V^2\cdot\frac{k_w}{10^{-pH}\cdot 10^{-\left[\frac{A\cdot I^{0.5}}{\left[1+\left(B\cdot 3.5\cdot I^{0.5}\right)\right]}\right]}}\right] + \left[\left(Q_{31}\right)\cdot V^3\cdot\frac{k_w}{10^{-pH}\cdot 10^{-\left[\frac{A\cdot I^{0.5}}{\left[1+\left(B\cdot 3.5\cdot I^{0.5}\right)\right]}\right]}}\right] + \left[\left(4\cdot Q_{42}\right)\cdot V^4\cdot\left[\frac{k_w}{10^{-pH}\cdot 10^{-\left[\frac{A\cdot I^{0.5}}{\left[1+\left(B\cdot 3.5\cdot I^{0.5}\right)\right]}\right]}}\right]^2\right]$$

$$\mathrm{Find}(I, V, pH) = \begin{pmatrix} 0.04307249 \\ 0.14340439 \\ 8.05381635 \end{pmatrix}$$

6.0 CALCULATIONS - UNIT 2 cont'd

To verify the equilibrium sump pH; the pH, H_3BO_3, and the ionic strength (I) that were calculated on the previous page are put into the following calculations. The pH is verified when three conditions are met:

1) the absolute difference between the concentration of boron used to develop the equations on the previous page and the concentration of boron resulting from the following calculations is < 1E-7.
2) the sum of ionic charges of all species pertinent to boron and water in solution and the ionic charge of sodium reduces to zero (defined when the absolute difference is < 1E-7).
3) the absolute difference between the ionic strength calculated on the previous page and the the ionic strength resulting from the following calculations is < 1E-7.

(a) Assume the solution ionic strength, $I := 0.04307249$

The activity coefficient of H^+, γ_H, is :

$$\gamma_H := 10^{-\left[\frac{A \cdot 1^2 \cdot I^{0.5}}{\left(1 + B \cdot a_H \cdot I^{0.5}\right)}\right]}$$

$\gamma_H = 0.84369386$

The activity coefficient of OH^-, γ_{OH}, is :

$$\gamma_{OH} := 10^{-\left[\frac{A \cdot 1^2 \cdot I^{0.5}}{\left(1 + B \cdot a_{OH} \cdot I^{0.5}\right)}\right]}$$

$\gamma_{OH} = 0.799825$

(b) Assume an equilibrium sump pH: $pH := 8.05381635$

The ionic activity product constant of water, k_w, at 185 °F (358.15 Kelvin) is:

$T = 358.15$

$$k_w := 10^{-\left(\frac{4470.99}{T} - 6.0875 + 0.01706 \cdot T\right)}$$

$k_w = 3.11811884 \cdot 10^{-13}$

The equilbrium quantity of H^+ is :

$$H := \frac{10^{-pH}}{\gamma_H}$$

$H = 1.04712556 \cdot 10^{-8}$

6.0 CALCULATIONS - UNIT 2 cont'd

The equilbrium quantity of OH^- is :

$$OH := \frac{k_w}{H \cdot \gamma_H \cdot \gamma_{OH}}$$

$$OH = 4.41279789 \cdot 10^{-5}$$

(c) Assume H_3BO_3 molality of 0.14340439:

$$H3BO3 := 0.14340439$$

The Molal equilibrium quotients of boric acid are:

$$Q_{11} := 10^{\left[\frac{1573.21}{T} + 28.6059 + 0.012078 \cdot T - 13.2258 \cdot \log(T) + (0.3250 - 0.00033 \cdot T) \cdot I - 0.0912 \cdot I^{1.5}\right]}$$

$$Q_{11} = 3.57089321 \cdot 10^{3}$$

$$Q_{21} := 10^{\left(\frac{2756.1}{T} - 18.966 + 5.835 \cdot \log(T)\right)}$$

$$Q_{21} = 4.288921 \cdot 10^{3}$$

$$Q_{31} := 10^{\left(\frac{3339.5}{T} - 8.084 + 1.497 \cdot \log(T)\right)}$$

$$Q_{31} = 1.15808569 \cdot 10^{5}$$

$$Q_{42} := 10^{\left(\frac{12820.0}{T} - 134.56 + 42.105 \cdot \log(T)\right)}$$

$$Q_{42} = 5.94241376 \cdot 10^{8}$$

COMMONWEALTH EDISON COMPANY

6.0 CALCULATIONS - UNIT 2 cont'd

The equilibrium quantities of boric acid species are :

$BOH_4 := Q_{11} \cdot H3BO3 \cdot OH$ $\qquad BOH_4 = 0.02259713$

$B2OH_7 := Q_{21} \cdot H3BO3^2 \cdot OH$ $\qquad B2OH_7 = 0.00389213$

$B3OH_{10} := Q_{31} \cdot H3BO3^3 \cdot OH$ $\qquad B3OH_{10} = 0.015071$

$B4OH_{14} := Q_{42} \cdot H3BO3^4 \cdot OH^2$ $\qquad B4OH_{14} = 4.89373837 \cdot 10^{-4}$

Concentration of boron, based on the above equilibrium quantities, is:

$$Conc_B := H3BO3 + BOH_4 + 2 \cdot B2OH_7 + 3 \cdot B3OH_{10} + 4 \cdot B4OH_{14}$$

$Conc_B = 0.22095627$ which is the same as $Mol_B = 0.22095625 \cdot \frac{gm \cdot mole}{liter}$

$Conc_B - .22095625 = 2 \cdot 10^{-8}$ (Condition 1 is met)

Check Borated water charge balance error, CBEB, is

$$CBEB := H - OH - BOH_4 - B2OH_7 - B3OH_{10} - 2 \cdot B4OH_{14}$$

$CBEB = -0.04258313$

Sodium charge balance error, CBEN, is

$$CBEN := \frac{Mol_{NaOH}}{gm \cdot \frac{mole}{liter}}$$ (divide by unit to eliminate dimensions)

$CBEN = 0.04258311$

$CBEB + CBEN = -1 \cdot 10^{-8}$ (Condition 2 is met)

6.0 CALCULATIONS - UNIT 2 cont'd

$Na := CBEN$

Verify ionic strength of the solution :

$$I_{sol} := \frac{Na + H + OH + BOH_4 + B2OH_7 + B3OH_{10} + (B4OH_{14}) \cdot 2^2}{2}$$

$I_{sol} = 0.0430725$ which is the same as assumption (a) $I = 0.04307249$

$I_{sol} - I = 1 \cdot 10^{-8}$ (Condition 3 is met)

Since conditions 1, 2 and 3 are met, the equilibrium sump $pH = 8.05381635$

The rest of this page is intentionally left blank.

6.0 CALCULATIONS - UNIT 1

$V_{RCStot} := 13620 \cdot ft^3$ Maximum Total RCS volume (Design Input 12)

$V_{PRES} := 1828.8 \cdot ft^3$ Steam generator pressurizer volume (Design Input 13)

$V_{PRESwat} := 1682.5 \cdot ft^3$ Maximum steam generator pressurizer water volume (Design Input 14)

$T_{RCSavg} := 569.1$ Average RCS temperature, F (Design Input 2)

$P_{PRES} := 2235$ Steam generator pressurizer pressure, psig (Design Input 2)

$V_{PRESstm} := V_{PRES} - V_{PRESwat}$

$V_{PRESstm} = 146.3 \cdot ft^3$ Minimum pressurizer steam volume

$V_{RCSwat} := V_{RCStot} - V_{PRESstm}$

$V_{RCSwat} = 1.34737 \cdot 10^4 \cdot ft^3$ Maximum RCS borated water volume

$\rho_{RCSwat} := 45.58 \cdot \frac{lb}{ft^3}$ RCS water density at nominal pressure and temperature shown above (Design Input 2)

$a_H := 9.0$ Ionic radius of H^+ (Design Input 16)

$a_{OH} := 3.5$ Ionic radius of OH- (Design Input 16)

$Mwt_B := \frac{10.81}{mole}$ Molecular weight of boron, B (Design Input 18)

$Mwt_{NaOH} := \frac{39.997}{mole}$ Molecular weight of sodium hydroxide, NaOH (Design Input 18)

$V_{rwst} := 457904 \cdot gal$ Maximum RWST borated water volume (Design Input 4)

$V_{accu} := 28868 \cdot gal$ Max. borated water quantity in accumulators, 4 x 7,217 gal each (Design Input 7)

$\rho_{NaOH} := 10.898 \cdot \frac{lb}{gal}$ NaOH solution density at 130F and 30 wt % NaOH (Design Input 20)

$V_{NaOH} := 2500 \cdot gal$ Minimum NaOH solution volume in spray additive tank (Design Input 9)

6.0 CALCULATIONS - UNIT 1 cont'd

$B_{rwst} := \frac{2500}{1 \cdot 10^6}$ RWST boron concentration (Design Input 3)

$B_{rcs} := \frac{2300}{1 \cdot 10^6}$ RCS boron concentration (Design Input 10)

$B_{accu} := \frac{2400}{1 \cdot 10^6}$ Accumulator boron concentration (Design Input 6)

$\rho_{w185} := 60.45 \cdot \frac{lb}{ft^3}$ Density of water @ 185 °F (Design Input 1)

μ Ionic strength in sump solution

γ_H activity coefficient of H^+ ion

γ_{OH} activity coefficient of OH- ion

k_w ionic activity product of water

$T := 358.15$ K Sump temperature in Kelvin (or 185°F) (Design Input 15)

$A := 0.5842$ $B := 0.3440$ Debye-Huckel Constants (Design Input 17)

CBEB borated water charge balance error

CBEN sodium charge balance error

z_i Ionic charge of species i

$Mwt_{H3BO3} := \frac{61.84}{mole}$ Molecular weight of boric acid (Design Input 18)

Calculate SI Accumulator borated water density at 90°F and a boron conc. of 2400 ppm

From Eq. D-10 of Reference 21, calculate the mass fraction of the boric acid solution (expressed as ppm w/o the 10^6 factor):

$$ppm_{H3BO3accu} := B_{accu} \cdot \frac{Mwt_{H3BO3}}{Mwt_B}$$

$$ppm_{H3BO3accu} = 0.01372951$$

6.0 CALCULATIONS - UNIT 1 cont'd

From Eq. D-11 of Reference 21, calculate the weight % of boric acid within the solution

$\%C_{baccu} := ppm_{H3BO3accu} \cdot 100$

$\%C_{baccu} = 1.37295097$

From Eq. D-12 of Reference 21, calculate the weight density of the solution, ρ_{BAaccu}

$\rho_{w90} := 62.12 \cdot \frac{lb}{ft^3}$ Density of water @ 90 °F (Design Input 1)

$\rho_{BAaccu} := \rho_{w90} \cdot \left[1 + \left(0.0035 \cdot \%C_{baccu}\right)\right]$

$\rho_{BAaccu} = 62.418507 \cdot \frac{lb}{ft^3}$

Calculate borated water quantity in Accumulators, M_{accu}, based on accumulator volume of 28,868 gallons

$M_{accu} := V_{accu} \cdot \rho_{BAaccu}$

$M_{accu} = 2.40878657 \cdot 10^5 \cdot lb$ (Based on the conversion $1 \cdot gal = 0.13368056 \cdot ft^3$)

Calculate RCS borated water density at 569.1°F and 2235 psig and a boron conc. of 2300 ppm

$ppm_{H3BO3rcs} := B_{rcs} \cdot \frac{Mwt_{H3BO3}}{Mwt_B}$

$ppm_{H3BO3rcs} = 0.01315745$

$\%C_{brcs} := ppm_{H3BO3rcs} \cdot 100$

$\%C_{brcs} = 1.31574468$

$\rho_{BArcs} := \rho_{RCSwat} \cdot \left[1 + \left(0.0035 \cdot \%C_{brcs}\right)\right]$

$\rho_{BArcs} = 45.78990075 \cdot \frac{lb}{ft^3}$

6.0 CALCULATIONS - UNIT 1 cont'd

Calculate borated water quantity in RCS, M_{rcs}

$M_{rcs} := V_{RCSwat} \cdot \rho_{BArcs}$

$M_{rcs} = 6.16959386 \cdot 10^5 \cdot lb$ (Based on the conversion $1 \cdot gal = 0.13368056 \cdot ft^3$)

Calculate RWST borated water density at 35°F and a boron conc. of 2500 ppm

$ppm_{H3BO3rwst} := B_{rwst} \cdot \frac{Mwt_{H3BO3}}{Mwt_B}$

$ppm_{H3BO3rwst} = 0.01430157$

$\%C_{brwst} := ppm_{H3BO3rwst} \cdot 100$

$\%C_{brwst} = 1.43015726$

$\rho_{w35} := 62.42 \cdot \frac{lb}{ft^3}$ Density of water @ 35 °F (Design Input 1)

$\rho_{BArwst} := \rho_{w35} \cdot \left[1 + \left(0.0035 \cdot \%C_{brwst}\right)\right]$

$\rho_{BArwst} = 62.73244646 \cdot \frac{lb}{ft^3}$

Calculate borated water quantity in RWST, M_{rwst}, based on RWST volume of 457,904 gallons

$M_{rwst} := V_{rwst} \cdot \rho_{BArwst}$

$M_{rwst} = 3.84003259 \cdot 10^6 \cdot lb$ (Based on the conversion $1 \cdot gal = 0.13368056 \cdot ft^3$)

Calculate Boron mass, M_B, in RWST, Accumulators, RCS :

$M_B := M_{rwst} \cdot B_{rwst} + M_{accu} \cdot B_{accu} + B_{rcs} \cdot M_{rcs}$

$M_B = 1.15971968 \cdot 10^4 \cdot lb$

6.0 CALCULATIONS - UNIT 1 cont'd

Calculate NaOH mass, M_{NaOH}, in 30% solution (Design Input 8)

$M_{NaOHsln} := V_{NaOH} \cdot \rho_{NaOH}$

$M_{NaOH} := M_{NaOHsln} \cdot 0.3$

$M_{NaOH} = 8.1735 \cdot 10^3 \cdot lb$

Calculate net water mass inside containment, M_{H20}

$M_{H20} := (M_{rwst} + M_{accu} + M_{rcs} + M_{NaOHsln}) - M_B - M_{NaOH}$

$M_{H20} = 4.70534493 \cdot 10^6 \cdot lb$

Calculate water Volume, V_w inside containment (at 185°F per Design Input 15):

$V_w := \frac{M_{H20}}{\rho_{w185}}$

$V_w = 2.20414443 \cdot 10^6 \cdot liter$ Based on the conversion ($1 \cdot ft^3 = 28.31684659 \cdot liter$)

Calculate Molar concentration of boron, Mol_B, and NaOH, Mol_{NaOH}

$Mol_B := \frac{M_B}{V_w \cdot Mwt_B}$ $Mol_{NaOH} := \frac{M_{NaOH}}{V_w \cdot Mwt_{NaOH}}$

$Mol_B = 0.22077659 \cdot \frac{gm \cdot mole}{liter}$ $Mol_{NaOH} = 0.04205391 \cdot \frac{gm \cdot mole}{liter}$

6.0 CALCULATIONS - UNIT 1 cont'd

Set up three equations to solve for equilibrium sump pH :

NOTE: For MathCAD purposes, the concentrations of various species are denoted as follows in all of the following equations:

$[H_3BO_3]$ = H3BO3
$[B(OH)_4^-]$ = BOH_4
$[B_2(OH)_7^-]$ = $B2OH_7$
$[B_3(OH)_{10}^-]$ = $B3OH_{10}$
$[B_4(OH)_{14}^-]$ = $B4OH_{14}$
$[H^+]$ = H
$[OH^-]$ = OH
$[Na^+]$ = Na

Condition 1: The sum of the molar concentration for all the boron ionic species should be equal to the molar concentration of boron, Mol_B, in the sump. This yields Equation 1 below.

$$Mol_B = H3BO3 + BOH_4 + 2 \cdot B2OH_7 + 3 \cdot B3OH_{10} + 4 \cdot B4OH_{14} \quad \text{Eq. 1}$$

Condition 2 : The borated water charge balance error, CBEB, represents the sum of the ionic charges of all species pertinent to boron and water in solution. The ionic charge of H^+ is 1. The ionic charge of OH^-, $B(OH)_4^-$, $B_2(OH)_7^-$, and $B_3(OH)_{10}^-$ is -1. The ionic charge of $B_4(OH)_{14}^-$ is -2. Ionic charge values are from Ref. 22. CBEB is then defined as follows:

$$CBEB = H - OH - BOH_4 - B2OH_7 - B3OH_{10} - 2 \cdot B4OH_{14}$$

The sodium charge balance error, CBEN, represents the ionic charge of sodium (defined as +1 per Ref. 18) and is defined as follows:

$$CBEN = Na$$

Electroneutrality requires that the sum of $c_i z_i$ (c is molarity and z is ionic charge) of all species and ions in solution equals 0, thus the sum of CBEB and CBEN equals 0. This yields Equation 2 below.

$$-Na = H - OH - BOH_4 - B2OH_7 - B3OH_{10} - 2 \cdot B4OH_{14} \quad \text{Eq. 2}$$

6.0 CALCULATIONS - UNIT 1 cont'd

Condition 3 : The ionic strength, I, of solution is calculated as follows:

$I = 0.5(c_1z_1^2 + c_2z_2^2 + \cdots\cdots + c_nz_n^2)$ (Ref. 18)

where c is molarity and z is ionic charge. Utilizing the ionic charges defined in the Condition 2 section with the above equation yields Equation 3 below.

$$2 \cdot I = Na + H + OH + BOH_4 + B2OH_7 + B3OH_{10} + (B4OH_{14}) \cdot 4 \qquad \text{Eq. 3}$$

All the variables in Eqs. 1, 2 and 3 will be defined in terms of pH, H_3BO_3, and I.

Per Ref. 22, the boron ionic species can be defined from equilibrium quotients as follows:

$BOH_4 = Q_{11} \cdot H3BO3 \cdot OH$

$B2OH_7 = Q_{21} \cdot H3BO3^2 \cdot OH$

$B3OH_{10} = Q_{31} \cdot H3BO3^3 \cdot OH$

$B4OH_{14} = Q_{42} \cdot H3BO3^4 \cdot OH^2$

Per Ref. 22, the molal equilibrium quotients, Q_{11}, Q_{21}, Q_{31} and Q_{42} are defined as follows and can be reduced , given: $T = 358.15$ K

$$Q_{11} = 10^{\left[\frac{1573.21}{T} + 28.6059 + 0.012078 \cdot T - 13.2258 \cdot \log(T) + (0.3250 - 0.00033 \cdot T) \cdot I - 0.0912 \cdot I^{1.5}\right]}$$

$$Q_{11} = 10^{\left[3.544684 + (0.206811) \cdot I - 0.0912 \cdot I^{1.5}\right]}$$

$$Q_{21} := 10^{\left(\frac{2756.1}{T} - 18.966 + 5.835 \cdot \log(T)\right)}$$

$$Q_{21} = 4.288921 \cdot 10^3$$

6.0 CALCULATIONS - UNIT 1 cont'd

$$Q_{31} := 10^{\left(\frac{3339.5}{T} - 8.084 + 1.497 \cdot \log(T)\right)}$$

$$Q_{31} = 1.15808569 \cdot 10^{5}$$

$$Q_{42} := 10^{\left(\frac{12820.0}{T} - 134.56 + 42.105 \cdot \log(T)\right)}$$

$$Q_{42} = 5.94241376 \cdot 10^{8}$$

Per Ref. 23, the equilibrium quantities of the H and OH ions are defined as follows:

$\gamma_H[H^+]\gamma_{OH}[OH^-] = k_w$ and $\gamma_H[H^+] = 10^{-pH}$

yielding:

$$H = \frac{10^{-pH}}{\gamma_H} \qquad OH = \frac{k_w}{H \cdot \gamma_H \gamma_{OH}}$$

Per Ref. 18, individual activity coefficient, γ_i, may be estimated using the following equation of the Debye-Huckel theory:

$$-\log \gamma_i = \frac{A \cdot z_i^2 \cdot I^{0.5}}{1 + B \cdot a_i \cdot I^{0.5}}$$

yielding:

$$\gamma_H = 10^{-\left[\frac{A \cdot 1^2 \cdot I^{0.5}}{\left(1 + B \cdot a_H \cdot I^{0.5}\right)}\right]} \qquad \gamma_{OH} = 10^{-\left[\frac{A \cdot (-1)^2 \cdot I^{0.5}}{\left(1 + B \cdot a_{OH} \cdot I^{0.5}\right)}\right]}$$

Per Ref. 24, the ionic activity product constant of water, k_w, is calculated as follows:

$$pk_w = -\log k_w = \frac{4470.99}{T} - 6.0875 + 0.01706 \cdot T$$

6.0 CALCULATIONS - UNIT 1 cont'd

yielding:

$$k_w := 10^{-\left(\frac{4470.99}{T} - 6.0875 + 0.01706 \cdot T\right)}$$

Given : $T = 358.15$ $a_H = 9$ $a_{OH} = 3.5$ $A = 0.5842$ $B = 0.344$

$$\gamma_H = 10^{-\left[\frac{(0.5842) \cdot I^{0.5}}{\left[1 + (0.3440) \cdot 9.0 \cdot I^{0.5}\right]}\right]} \qquad \gamma_{OH} = 10^{-\left[\frac{(0.5842) \cdot I^{0.5}}{\left[1 + (0.3440) \cdot 3.5 \cdot I^{0.5}\right]}\right]}$$

$$k_w = 3.11811884 \cdot 10^{-13}$$

Substitute γ_H , γ_{OH} and k_w into the expressions for H and OH to obtain :

$$H = \frac{10^{-pH}}{\gamma_H} = \frac{10^{-pH}}{10^{-\left[\frac{(0.5842) \cdot I^{0.5}}{\left[1 + (0.3440) \cdot 9.0 \cdot I^{0.5}\right]}\right]}}$$

$$OH = \frac{k_w}{H \cdot \gamma_H \gamma_{OH}} = \frac{k_w}{\frac{10^{-pH}}{\gamma_H} \cdot \gamma_H \gamma_{OH}} = \frac{k_w}{10^{-pH} \cdot \gamma_{OH}} = \frac{3.11811884 \cdot 10^{-13}}{10^{-pH} \cdot 10^{-\left[\frac{(0.5842) \cdot I^{0.5}}{\left[1 + (0.3440) \cdot 3.5 \cdot I^{0.5}\right]}\right]}}$$

Using the expressions and values developed for $Q_{11}, Q_{21}, Q_{31}, Q_{42}$, H and OH with Equations 1, 2 and 3, and given the following, all unknowns can be determined.

$$Mol_B = 0.22077659 \cdot \frac{gm \cdot mole}{liter} \qquad Mol_{NaOH} = 0.04205391 \cdot \frac{gm \cdot mole}{liter}$$

$$Na := Mol_{NaOH} \qquad Na = 0.04205391 \cdot \frac{gm \cdot mole}{liter}$$

Also for simplicity, define a variable V for H_3BO_3, Equations 1, 2, and 3 can be rewritten in terms of three variables (namely pH, I and V). With three equations and three variables, the variables can be solved simultaneously.

The forms of the equations to be solved are shown on the next page. The Math Solver in MathCAD 5.0 is used to solve the equations.

6.0 CALCULATIONS - UNIT 1 cont'd

Guess values:

$I := 0.045200 \qquad V := 0.1426000 \qquad pH := 8.05$

Given

Equation 1

$$0.22077659 = V + 10^{\left[3.544684 + (0.206811)\cdot I - 0.0912\cdot I^{1.5}\right]}\cdot V\cdot\frac{k_w}{10^{-pH}\cdot 10^{-\left[\frac{A\cdot I^{0.5}}{\left[1+\left(B\cdot 3.5\cdot I^{0.5}\right)\right]}\right]}} + \left(2\cdot Q_{21}\right)\cdot V^2\cdot\frac{k_w}{10^{-pH}\cdot 10^{-\left[\frac{A\cdot I^{0.5}}{\left[1+\left(B\cdot 3.5\cdot I^{0.5}\right)\right]}\right]}} + \left(3\cdot Q_{31}\right)\cdot V^3\cdot\frac{k_w}{10^{-pH}\cdot 10^{-\left[\frac{A\cdot I^{0.5}}{\left[1+\left(B\cdot 3.5\cdot I^{0.5}\right)\right]}\right]}} + \left(4\cdot Q_{42}\right)\cdot V^4\cdot\left[\frac{k_w}{10^{-pH}\cdot 10^{-\left[\frac{A\cdot I^{0.5}}{\left[1+\left(B\cdot 3.5\cdot I^{0.5}\right)\right]}\right]}}\right]^2$$

Equation 2

$$0.04205391 = \frac{10^{-pH}}{10^{-\left[\frac{A\cdot I^{0.5}}{\left[1+\left(B\cdot 9.0\cdot I^{0.5}\right)\right]}\right]}} - \left[\frac{k_w}{10^{-pH}\cdot 10^{-\left[\frac{A\cdot I^{0.5}}{\left[1+\left(B\cdot 3.5\cdot I^{0.5}\right)\right]}\right]}}\right] - \left[10^{\left[3.544684 + (0.206811)\cdot I - 0.0912\cdot I^{1.5}\right]}\cdot V\cdot\frac{k_w}{10^{-pH}\cdot 10^{-\left[\frac{A\cdot I^{0.5}}{\left[1+\left(B\cdot 3.5\cdot I^{0.5}\right)\right]}\right]}}\right] - \left[Q_{21}\cdot V^2\cdot\frac{k_w}{10^{-pH}\cdot 10^{-\left[\frac{A\cdot I^{0.5}}{\left[1+\left(B\cdot 3.5\cdot I^{0.5}\right)\right]}\right]}}\right] - \left[Q_{31}\cdot V^3\cdot\frac{k_w}{10^{-pH}\cdot 10^{-\left[\frac{A\cdot I^{0.5}}{\left[1+\left(B\cdot 3.5\cdot I^{0.5}\right)\right]}\right]}}\right] - \left[\left(2\cdot Q_{42}\right)\cdot V^4\cdot\left[\frac{k_w}{10^{-pH}\cdot 10^{-\left[\frac{A\cdot I^{0.5}}{\left[1+\left(B\cdot 3.5\cdot I^{0.5}\right)\right]}\right]}}\right]^2\right]$$

Equation 3

$$2\cdot I = 0.04205391 + \frac{10^{-pH}}{10^{-\left[\frac{A\cdot I^{0.5}}{\left[1+\left(B\cdot 9.0\cdot I^{0.5}\right)\right]}\right]}} + \left[\frac{k_w}{10^{-pH}\cdot 10^{-\left[\frac{A\cdot I^{0.5}}{\left[1+\left(B\cdot 3.5\cdot I^{0.5}\right)\right]}\right]}}\right] + \left[10^{\left[3.544684 + (0.206811)\cdot I - 0.0912\cdot I^{1.5}\right]}\cdot V\cdot\frac{k_w}{10^{-pH}\cdot 10^{-\left[\frac{A\cdot I^{0.5}}{\left[1+\left(B\cdot 3.5\cdot I^{0.5}\right)\right]}\right]}}\right] + \left[\left(Q_{21}\right)\cdot V^2\cdot\frac{k_w}{10^{-pH}\cdot 10^{-\left[\frac{A\cdot I^{0.5}}{\left[1+\left(B\cdot 3.5\cdot I^{0.5}\right)\right]}\right]}}\right] + \left[\left(Q_{31}\right)\cdot V^3\cdot\frac{k_w}{10^{-pH}\cdot 10^{-\left[\frac{A\cdot I^{0.5}}{\left[1+\left(B\cdot 3.5\cdot I^{0.5}\right)\right]}\right]}}\right] + \left[\left(4\cdot Q_{42}\right)\cdot V^4\cdot\left[\frac{k_w}{10^{-pH}\cdot 10^{-\left[\frac{A\cdot I^{0.5}}{\left[1+\left(B\cdot 3.5\cdot I^{0.5}\right)\right]}\right]}}\right]^2\right]$$

$$\mathrm{Find}(I, V, pH) = \begin{pmatrix} 0.0425323 \\ 0.14402951 \\ 8.0455942 \end{pmatrix}$$

6.0 CALCULATIONS - UNIT 1 cont'd

To verify the equilibrium sump pH; the pH, H_3BO_3, and the ionic strength (I) that were calculated on the previous page are put into the following calculations. The pH is verified when three conditions are met:
1) the absolute difference between the concentration of boron used to develop the equations on the previous page and the concentration of boron resulting from the following calculations is < 1E-7.
2) the sum of ionic charges of all species pertinent to boron and water in solution and the ionic charge of sodium reduces to zero (defined when the absolute difference is < 1E-7).
3) the absolute difference between the ionic strength calculated on the previous page and the the ionic strength resulting from the following calculations is < 1E-7.

(a) Assume the solution ionic strength, $I := 0.0425323$

The activity coefficient of H^+, γ_H, is :

$$\gamma_H := 10^{-\left[\frac{A \cdot 1^2 \cdot I^{0.5}}{\left(1 + B \cdot a_H \cdot I^{0.5}\right)}\right]}$$

$\gamma_H = 0.84424457$

The activity coefficient of OH^-, γ_{OH}, is :

$$\gamma_{OH} := 10^{-\left[\frac{A \cdot 1^2 \cdot I^{0.5}}{\left(1 + B \cdot a_{OH} \cdot I^{0.5}\right)}\right]}$$

$\gamma_{OH} = 0.80072577$

(b) Assume an equilibrium sump pH: $pH := 8.0455942$

The ionic activity product constant of water, k_w, at 185 °F (358.15 Kelvin) is:

$T = 358.15$

$$k_w := 10^{-\left(\frac{4470.99}{T} - 6.0875 + 0.01706 \cdot T\right)}$$

$k_w = 3.11811884 \cdot 10^{-13}$

The equilbrium quantity of H^+ is :

$$H := \frac{10^{-pH}}{\gamma_H}$$

$H = 1.06644269 \cdot 10^{-8}$

6.0 CALCULATIONS - UNIT 1 cont'd

The equilbrium quantity of OH^- is :

$$OH := \frac{k_w}{H \cdot \gamma_H \gamma_{OH}}$$

$$OH = 4.32516875 \cdot 10^{-5}$$

(c) Assume H_3BO_3 molality of 0.14402951:

$$H3BO3 := 0.14402951$$

The Molal equilibrium quotients of boric acid are:

$$Q_{11} := 10^{\left[\frac{1573.21}{T} + 28.6059 + 0.012078 \cdot T - 13.2258 \cdot \log(T) + (0.3250 - 0.00033 \cdot T) \cdot I - 0.0912 \cdot I^{1.5}\right]}$$

$$Q_{11} = 3.57010044 \cdot 10^3$$

$$Q_{21} := 10^{\left(\frac{2756.1}{T} - 18.966 + 5.835 \cdot \log(T)\right)}$$

$$Q_{21} = 4.288921 \cdot 10^3$$

$$Q_{31} := 10^{\left(\frac{3339.5}{T} - 8.084 + 1.497 \cdot \log(T)\right)}$$

$$Q_{31} = 1.15808569 \cdot 10^5$$

$$Q_{42} := 10^{\left(\frac{12820.0}{T} - 134.56 + 42.105 \cdot \log(T)\right)}$$

$$Q_{42} = 5.94241376 \cdot 10^8$$

6.0 CALCULATIONS - UNIT 1 cont'd

The equilibrium quantities of boric acid species are :

$BOH_4 := Q_{11} \cdot H3BO3 \cdot OH$ $\qquad BOH_4 = 0.02224001$

$B2OH_7 := Q_{21} \cdot H3BO3^2 \cdot OH$ $\qquad B2OH_7 = 0.00384817$

$B3OH_{10} := Q_{31} \cdot H3BO3^3 \cdot OH$ $\qquad B3OH_{10} = 0.01496574$

$B4OH_{14} := Q_{42} \cdot H3BO3^4 \cdot OH^2$ $\qquad B4OH_{14} = 4.78382113 \cdot 10^{-4}$

Concentration of boron, based on the above equilibrium quantities, is:

$Conc_B := H3BO3 + BOH_4 + 2 \cdot B2OH_7 + 3 \cdot B3OH_{10} + 4 \cdot B4OH_{14}$

$Conc_B = 0.22077661$ which is the same as $Mol_B = 0.22077659 \cdot \frac{gm \cdot mole}{liter}$

$Conc_B - 0.22077659 = 2 \cdot 10^{-8}$ (Condition 1 is met)

Check Borated water charge balance error, CBEB, is

$CBEB := H - OH - BOH_4 - B2OH_7 - B3OH_{10} - 2 \cdot B4OH_{14}$

$CBEB = -0.04205392$

Sodium charge balance error, CBEN, is

$CBEN := \frac{Mol_{NaOH}}{gm \cdot \frac{mole}{liter}}$ (divide by unit to eliminate dimensions)

$CBEN = 0.04205391$

$CBEB + CBEN = -2 \cdot 10^{-8}$ (Condition 2 is met)

6.0 CALCULATIONS - UNIT 1 cont'd

$Na := CBEN$

Verify ionic strength of the solution :

$$I_{sol} := \frac{Na + H + OH + BOH_4 + B2OH_7 + B3OH_{10} + (B4OH_{14}) \cdot 2^2}{2}$$

$I_{sol} = 0.04253231$ which is the same as assumption (a) $I = 0.0425323$

$I_{sol} - I = 8 \cdot 10^{-9}$ (Condition 3 is met)

Since conditions 1, 2 and 3 are met, the equilibrium sump $pH = 8.0455942$

The rest of this page is intentionally left blank.

Exhibit E
NEP-12-02
Revision 5

COMMONWEALTH EDISON COMPANY

CALCULATION NO. : ATD-0356	PROJECT NO. 9135-196	PAGE NO. A1

Appendix A

Byron/Braidwood Unit 1 and Unit 2
Determination of Minimum Delivered Volume of NaOH

Prepared By/Date: David Neidich / David Neidich / 11/17/97

Reviewed By/Date: E.A. KACZMARSKI / EA Kaczmarski / 11-18-97

Approved By/Date: M.S. LEUTLOFF / MS Leutloff / 11-18-97

POOR QUALITY ORIGINAL

REVISION NO.: 04 5

AMSB
12/01/1997

COMMONWEALTH EDISON COMPANY

A.1 Purpose/Objective

The purpose of this appendix is to determine the highest final Containment Spray Additive Tank (CSAT) level, based on the lowest initial CSAT level, required to deliver a minimum of 2500 gallons of NaOH to the Containment Spray System. Past revisions of this calculation have demonstrated that delivering a minimum of 2500 gallons of NaOH (30 wt% at 130°F) will satisfy recirculation sump minimum pH requirements. The highest final CSAT level required to supply 2500 gallons is used as the System Safety Limit for calculating the CSAT LO-2 level alarm setpoint per Reference A.5.14. Therefore, minimum recirculation sump pH will be calculated based on a minimum volume of 2500 gallons NaOH delivered to the Containment Spray System.

A.2 Methodology/Acceptance Criteria

The tank is a right circular cylinder with flanged and dished heads (Reference A.5.3 and A.5.4). This calculation is only concerned with the cylindrical portion of the tank since the heads are outside the span of the level measuring instruments. The volume of a right circular cylinder is:

$$V = \pi \frac{D_{inner}^2}{4} \Delta h$$

The highest final CSAT level is based upon the lowest initial CSAT level minus the change in level corresponding to 2500 gallons. Initial CSAT level is based on the lowest permissible fill level of the tank minus (2)1LI-CS021 instrument uncertainty

Minimum sump pH is calculated assuming 30% NaOH concentration at 130°F (Design Inputs 8 and 20). These assumptions result in the lowest allowable NaOH specific gravity and the lowest NaOH mass available to the Containment Spray System, which is conservative. Level transmitter (2)1LT-CS021 scaling is based on higher NaOH specific gravity (per Byron/Braidwood EWCS Equipment/Component Engineering Data), therefore, actual CSAT level would be higher than indicated level based on these specific gravity conditions. By assuming the lowest specific gravity NaOH solution, the total mass of NaOH delivered to the Containment Spray System is conservative (lowest) regardless of level measurement uncertainty associated with variation in NaOH specific gravity. Therefore, allowances for variation in NaOH concentration or temperature are not necessary in determining (2)1LI-CS021 level indicator uncertainty. Furthermore, the CSAT LO-2 level alarm setpoint calculated in Reference A.5.14 accounts for the maximum potential change in NaOH specific gravity from calibrated conditions. Therefore, level measurement uncertainty associated with changes in NaOH specific gravity is bounded for determination of recirculation sump minimum pH.

The results of this calculation are used as input for other calculations. There are no direct acceptance criteria for the results of this calculation.

A.3 Assumptions

A.3.1 Deleted.

A.3.2 Deleted.

A.3.3 It is assumed that the operator closes the CS eductor additive valves (2)1CS019A/B immediately after the Spray Additive Tank LO-2 level alarm is received, and that spray

POOR QUALITY ORIGINAL

AMSB
12/01/1997

COMMONWEALTH EDISON COMPANY

additive flow ceases immediately. This is conservative, since it will minimize the amount of spray additive delivered to the containment.

A.3.4 The volume displaced by the pipe wall of the fill line is assumed to be negligible. (Per Reference A.5.12, the area of metal in 4" Schedule 40 pipe is 3.174 in², which equals approximately 0.16 gal/ft of pipe.)

A.4 Design Input

A.4.1 Tank Dimensions per Reference A.5.3 and A.5.4:

Diameter:	8 ft
Wall Thickness:	0.41 in
Distance Between Instrument Taps:	2 x (6'6½" - 3¾")
Distance from Tap to Center Line:	6'6½" – 3¾"
Fill Pipe:	4" Schedule 40

A.4.2 The minimum fill level for the CSAT is 78.6% per References A.5.13, A.5.9 and A.5.10.

A.4.3 Deleted.

A.4.4 Deleted.

POOR QUALITY ORIGINAL

A.4.5 The maximum uncertainty (excluding changes in NaOH concentration) of (2)1LI-CS021 is ± 5.0% per Reference A.5.11.

A.5 References

A.5.1 Calculation SM-CS046A, Revision A, "Containment Spray Additive Tank Level Switch (2)1LS-CS046A." (Byron & Braidwood)

A.5.2 Calculation SM-CS046B, Revision A, "Containment Spray Additive Tank Level Switch (2)1LS-CS046B." (Byron & Braidwood)

A.5.3 Vendor Drawing NL-10753, Revision 15, "8'-0" O.D. x 13'-4" High (Tan. To Tan.) Spray Additive Tank." (Byron)

A.5.4 Vendor Drawing NL-10756, Revision 15, "8'-0" O.D. x 13'-4" High (Tan. To Tan.) Spray Additive Tank." (Braidwood)

A5.5 1BwEP-1, Revision 1A "Loss of Reactor or Secondary Coolant Unit 1." (Braidwood)

A.5.6 2BwEP-1, Revision 1A, "Loss of Reactor or Secondary Coolant Unit 2." (Braidwood)

A.5.7 1BEP-1, Revision 1, "Loss of Reactor or Secondary Coolant Unit 1." (Byron)

A.5.8 2BEP-1, Revision 1, "Loss of Reactor or Secondary Coolant Unit 2." (Byron)

A.5.9 BWOP CS-8, Revision 4 "Filling the Containment Spray Additive Tank." (Braidwood)

A5.10 BOP CS-6, Revision 6, "Filling the Containment Spray Additive Tank." (Byron)

AMSB
12/01/1997

COMMONWEALTH EDISON COMPANY

A.5.11 NDIT-BB-EXT-1216, 12/18/96, "CSAT Level Indicator Loop Inaccuracies." (Byron & Braidwood)

A.5.12 Crane Technical Paper Number 410, "Flow of Fluids Through Valves, Fittings, and Pipe," 1988.

A.5.13 Braidwood 1&2 Technical Specifications, Amendment 76 and Byron 1&2 Technical Specifications, Amendment 83, Section LCO 3.6.2.2.

A.5.14 Calculation BRW-97-0274/BYR97-168 Revision 1, "Containment Spray Additive Tank Level Switch Lo-Lo Setpoint Analysis" (Byron & Braidwood)

A.5.15 NDIT RSG-97-019, dated 6/20/97, Subject: Transmittal of design assumptions for the S&L calculation revisions dealing with the CSAT level setpoints.

A.6 Calculations

A.6.1 Minimum Initial CSAT Level

Per References A.5.13, A.5.9, and A.5.10, the lowest CSAT fill level is 78.6% per level indicator (2)1LI-CS021. (Note that the (2)1LT-CS021 upper and lower instrument taps are at the same elevation as the CSAT upper and lower tank taps per Reference A.5.14 reference drawings). This tank level converted to distance above the (2)1LT-CS021 and CSAT instrument lower tap is:

$$h_{initial} = \frac{\%\ Level}{100} \times Distance\ Between\ Taps$$

$$= 0.786(2(6'6\tfrac{1}{2}" - 3\tfrac{3}{4}"))$$

$$= 9.792\ ft$$

Per Reference A.5.11, the uncertainty of (2)1LI-CS021 is equal to ±5%. Based on the (2)1LT-CS021 instrument span of 149.5" (distance between instrument taps per Design Input A.4.1), the associated level uncertainty is:

$$149.5" \times 0.05 = 7.475"$$

The minimum initial CSAT level is equal to the total height above the (2)1LT-CS021 instrument and CSAT lower tap corresponding to 78.6% indicated level minus allowance for instrument uncertainty:

$$h_{initial,minimum} = h_{initial} - Uncertainty$$

$$= 9.792\ ft - \frac{7.475}{12}\ ft$$

$$= 9.169\ ft$$

POOR QUALITY ORIGINAL

AMSB
12/01/1997

COMMONWEALTH EDISON COMPANY

A.6.2 CSAT Final Level Required to Deliver 2500 gallons NaOH

Based on previous revisions of this calculation, it is known that minimum sump pH requirements are satisfied if a minimum of 2500 gallons of NaOH are supplied to the Containment Spray system. The following calculation determines the highest level ($h_{final\ maximum}$) above the CSAT lower tap to assure 2500 gallons of NaOH are supplied:

2500 gallons x (ft^3/7.48 gal) = 334.225 ft^3

$$V_{minimum} = \pi \frac{D^2_{inner}}{4} \Delta h_{minimum}$$

$$= \pi \frac{(8\ ft - 2\ (0.41/12)ft)^2}{4} (9.169\ ft - h_{final,maximum}) = 334.225\ ft^3$$

$$h_{final\ maximum} = 2.40\ ft$$

A.7 Summary and Conclusions

The CSAT LO-2 level alarm must actuate at a maximum of 2.40 feet above the CSAT lower tap to assure a minimum volume of 2500 gallons NaOH is delivered to the Containment Spray System. Reference A.5.14 determines the CSAT LO-2 level setpoint necessary for alarm actuation at or below 2.40 feet above the CSAT lower tap including allowances for (2)1LS-CS046A/B instrument uncertainty, NaOH specific gravity uncertainty, and differences in tap elevation for the CSAT, level transmitters (2)1LT-CS021, and level transmitters (2)1LS-CS046A/B.

Per References A.5.5 through A.5.8, the CS eductor spray additive valves are closed when the CSAT LO-2 level is reached. Assuming that the operator closes the valves immediately and the system responds instantaneously (Assumption A.3.3), the final level in the CSAT will be at the LO-2 level. This is conservative since this results in a smaller delivered NaOH volume.

In conclusion, calculation of sump minimum pH will be based on delivering a minimum of 2500 gallons of NaOH (30 wt% at 130), which is assured by the CSAT LO-2 level setpoint per Reference A.5.14 occuring at or below 2.40 ft above the CSAT lower instrument tap.

POOR QUALITY ORIGINAL

AMSB
12/01/1997

Attachment 3

Response to NRC Request for Additional Information

BRAIDWOOD STATION
UNITS 1 AND 2

Docket Nos. STN 50-456 and STN 50-457
License Nos. NPF-72 and NPF-77

and

BYRON STATION
UNITS 1 AND 2

Docket Nos. STN 50-454 and STN 50-455
License Nos. NPF-37 and NPF-66

Simplified Diagrams (Provided for Information Only)

ECCS-1, ECCS System, Revision 6
ECCS-2, ECCS Ring, Revision 6

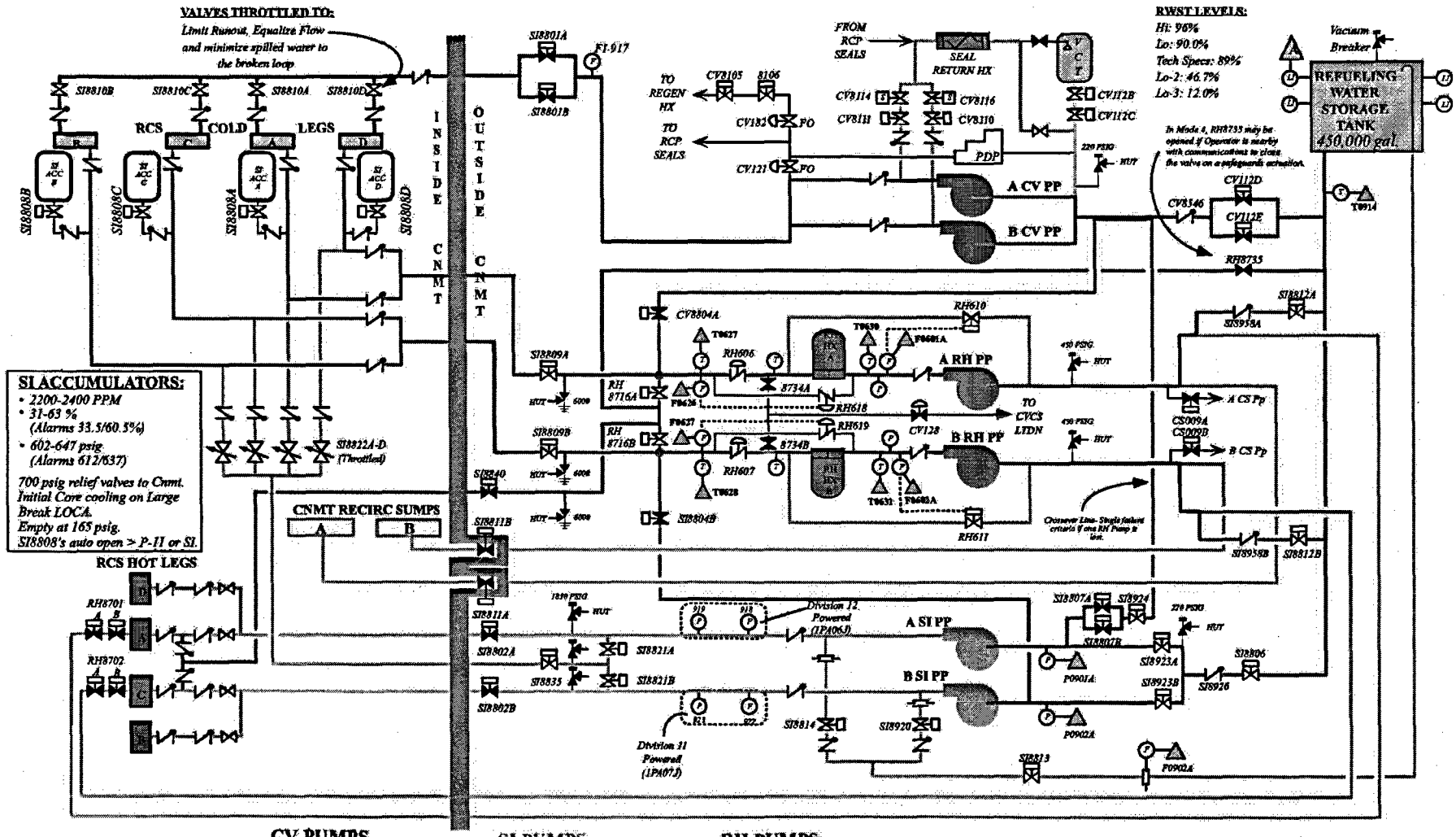

CV PUMPS
2600 psid Shutoff
2500 psid @ 150 gpm
600 psid @ 550 gpm
381KW at 63 amps

Modes 1-3: *Cannot close RH8716's (will only inject into 2 cold legs)*

Mode 4: *Must close 1 of the RH8716's (prevent lifting non-running RH train relief), but power must be available & capable of opening from the MCB.*

SI PUMPS
1500 psid Shutoff
1200 psid @ 400 gpm
800 psid @ 650 gpm

CV8110/8111
Close RWST LO-2 (46.7%)
2/4 Channels
(with SI Signal)

RH PUMPS
200 psid Shutoff
165 psid @ 3000 gpm
125 psid @ 5000 gpm

CV8114 / 8116
Close 1448 psig and
Open 1643 psig
2/4 WR RCS Pressure (with SI Signal)
- If 2 Pressure switches are > 1643#, and 2 are < 1448 #, with an SI signal, CV8114 & CV8116 will fail Open (ETC)

SI SIGNALS:
1. *Manual (1/2 switches)*
2. *Low PZR Press < 1829 psig (2/4) **
3. *Low Steamline Press < 640 psig (2/3 on 1/4 S/G's) *#*
4. *Cnmt Hi-1 > 3.4 psig (2/3)*

** Manually Blocked < P-11*
 # Rate Sensitive

UFSAR: 6.3

ECCS-1, ECCS SYSTEM
SEP 11, 2002, REV. 6
FOR TRAINING USE ONLY

Back to Index

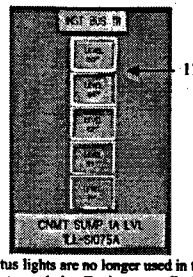

114" Cnmt Floor (377')

Status lights are no longer used in the EPs due to not being Environmentally Qualified.

COLD LEG RECIRCULATION (EP ES-1.3):

Need SI with RWST Lo-2 (46.7%)

1. SI8811A & B Auto open (RWST Lvl & SI)
2. Establish CC flow to RH HX's
3. Check adequate floor water level, close SI8812A & B
4. All pumps discharge to cold legs
   A. CV8110, 8111, 8114 & 8116 closed
   B. SI8813, 8814 & 8920 (SI recircs) manually closed (Prevents radioactive water to RWST)
   C. RH8716A & B (RH train xtie) Manually closed (Prevents fault on one train starving both trains)
   D. SI8807A, B & 8924 (CV to SI) manually opened (Single RH train can supply all ECCS Pumps)
   E. Open CV8804A & SI8804B (RH to CV & SI Pp's)
5. Reset SI signal to reposition valves
6. CV112D, E & SI8806 manually closed (Isolates all flowpaths from RWST to ECCS pumps
7. At RWST Level Lo-3 alarm:
   Open CS009A/B (Sump suctions), and
   Close CS001A/B (RWST suctions)

HOT LEG RECIRCULATION (EP ES-1.4):

[Between 5 hours and 50 minutes and 6 hours and 10 minutes after SI, prepare for hot leg recirc 4 hours and 50 minutes after SI]

'A' RH to A & C Hot Legs, 'B' RH to SI & CV Pp's, SI to Hot Legs, CV to Cold Legs

(May not be sure of where the break is located at)

1. Close SI8809A & B
2. Open RH8716A
3. Open SI8840 for RH to A & C Hot Legs
4. Stop A SI Pump, close SI8821A and open SI8802A
5. Restart A SI pump to A & D Hot Legs
6. Perform same step for B SI Pump
7. Close SI8835

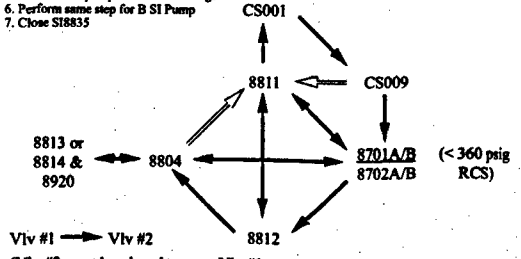

Vlv #1 → Vlv #2

(Vlv #2 must be *closed* to open Vlv #1

Vlv #1 ⇒ Vlv #2

(Vlv #2 must be *open* to open Vlv #1

Vlv #1 ↔ Vlv #2

(To open *either* vlv, the other must be *closed*)

INJECTION PHASE:

RWST & Accumulators go to Cold Legs

1. CV Pumps start
2. CV112D & E open, then CV112B & C close
3. SI8801A & B open
4. SI Pumps start injecting through SI8821A, B & SI8835
5. RH Pumps start injecting through SI8809A & B
6. CV Charging (CV8105 & 8106) close
7. CV8110 & 8111 close w/ RWST Lo-2
8. CV8114 & 8116 close @ 1448#, open 1643#
9. SI Accum valves SI8808's get redundant signal to open

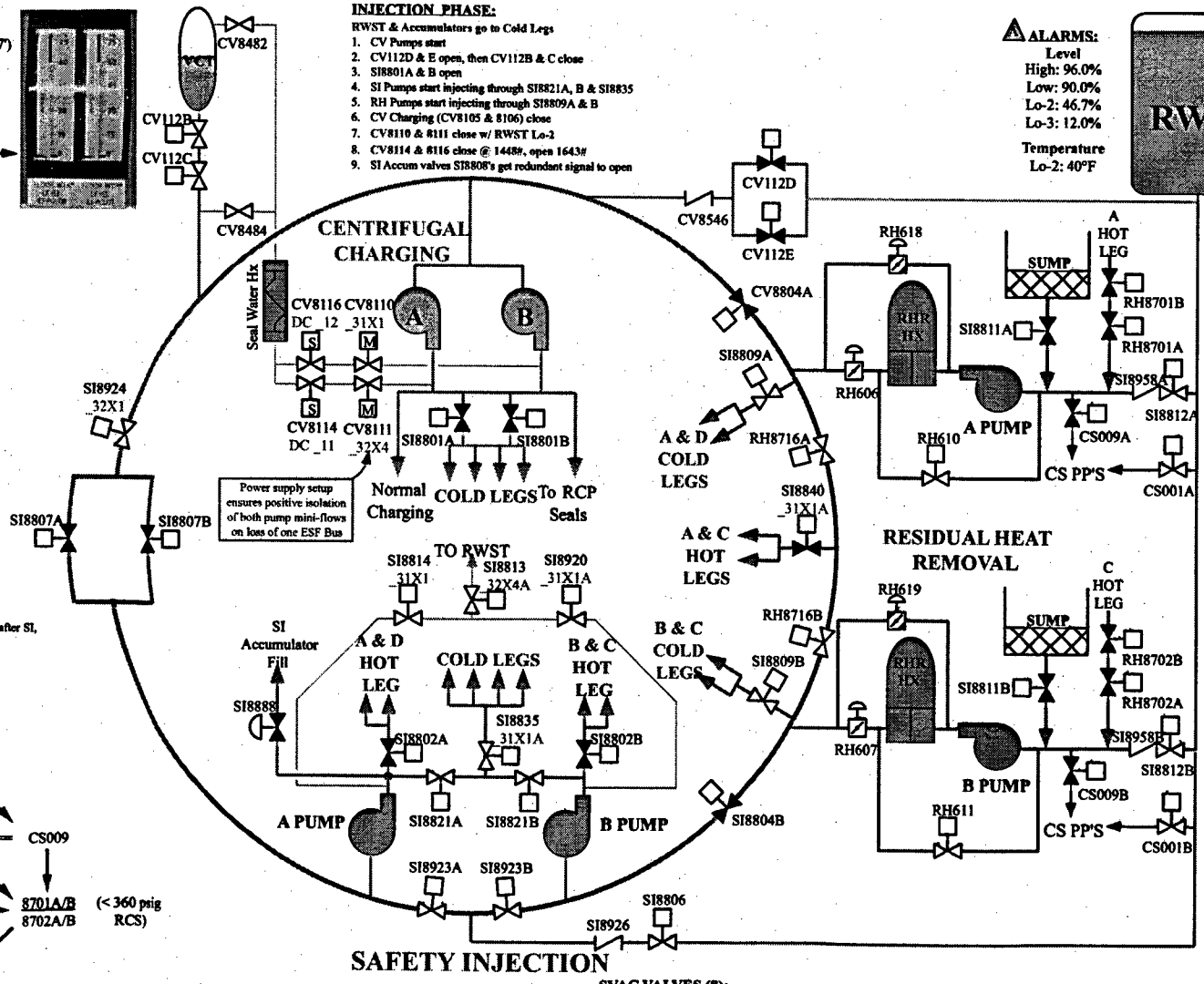

ALARMS:

Level
High: 96.0%
Low: 90.0%
Lo-2: 46.7%
Lo-3: 12.0%

Temperature
Lo-2: 40°F

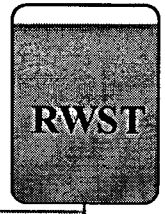

REASONS FOR HOT LEG RECIRC:

1. Increases Core flow (assuming Cold Leg break)
2. Prevent plating out (due to boiling) which would:
   a. Block flow Channels
   b. Reduce heat transfer.

SVAG VALVES (8):

(De-energize per Tech Specs)

Modes 1-3

1. SI8806 Open
2. SI8835 Open
3. SI8813 Open
4. SI8802A, B Closed

Modes 1-4 (H.L. Injections)

1. SI8809A, B Open
2. SI8840 Closed

ECCS-2, ECCS RING

MAR 8, 2004, REV. 6

FOR TRAINING USE ONLY