MANUAL HARD COPY DISTRIBUTION
DOCUMENT TRANSMITTAL 2005-51584

USER INFORMATION:

GERLACH*ROSE M EMPL#:028401 CA#: 0363

Address: NUCSA2

Phone#: 254-3194

TRANSMITTAL INFORMATION:

TO: [redacted] 11/23/2005

LOCATION: [redacted]

FROM: NUCLEAR RECORDS DOCUMENT CONTROL CENTER (NUCSA-2)

THE FOLLOWING CHANGES HAVE OCCURRED TO THE HARDCOPY OR ELECTRONIC MANUAL ASSIGNED TO YOU. HARDCOPY USERS MUST ENSURE THE DOCUMENTS PROVIDED MATCH THE INFORMATION ON THIS TRANSMITTAL. WHEN REPLACING THIS MATERIAL IN YOUR HARDCOPY MANUAL, ENSURE THE UPDATE DOCUMENT ID IS THE SAME DOCUMENT ID YOU'RE REMOVING FROM YOUR MANUAL. TOOLS FROM THE HUMAN PERFORMANCE TOOL BAG SHOULD BE UTILIZED TO ELIMINATE THE CHANCE OF ERRORS.

ATTENTION: "REPLACE" directions do not affect the Table of Contents, Therefore no TOC will be issued with the updated material.

TRM1 - TECHNICAL REQUIREMENTS MANUAL UNIT 1

REMOVE MANUAL TABLE OF CONTENTS DATE: 11/05/2005

ADD MANUAL TABLE OF CONTENTS DATE: 11/22/2005

CATEGORY: DOCUMENTS TYPE: TRM1

A001

ID: TEXT 2.2
REMOVE: REV:3

ADD: REV: 4

CATEGORY: DOCUMENTS TYPE: TRM1
ID: TEXT 3.1.3
REMOVE: REV:1

ADD: REV: 2

CATEGORY: DOCUMENTS TYPE: TRM1
ID: TEXT B3.1.3
REMOVE: REV:1

ADD: REV: 2

CATEGORY: DOCUMENTS TYPE: TRM1
ID: TEXT LOES
REMOVE: REV:23

ADD: REV: 24

ANY DISCREPANCIES WITH THE MATERIAL PROVIDED, CONTACT DCS @ X3107 OR X3136 FOR ASSISTANCE. UPDATES FOR HARDCOPY MANUALS WILL BE DISTRIBUTED WITHIN 5 DAYS IN ACCORDANCE WITH DEPARTMENT PROCEDURES. PLEASE MAKE ALL CHANGES AND ACKNOWLEDGE COMPLETE IN YOUR NIMS INBOX UPON COMPLETION OF UPDATES. FOR ELECTRONIC MANUAL USERS, ELECTRONICALLY REVIEW THE APPROPRIATE DOCUMENTS AND ACKNOWLEDGE COMPLETE IN YOUR NIMS INBOX.

Manual Name: TRM1

Manual Title: TECHNICAL REQUIREMENTS MANUAL UNIT 1

Table Of Contents

Issue Date: 11/22/2005

Procedure Name	Rev	Issue Date	Change ID	Change Number
TEXT LOES	24	11/22/2005		
Title: LIST OF EFFECTIVE SECTIONS				
TEXT TOC	5	02/04/2005		
Title: TABLE OF CONTENTS				
TEXT 1.1	0	11/18/2002		
Title: USE AND APPLICATION DEFINITIONS				
TEXT 2.1	1	02/04/2005		
Title: PLANT PROGRAMS AND SETPOINTS PLANT PROGRAMS				
TEXT 2.2	4	11/22/2005		
Title: PLANT PROGRAMS AND SETPOINTS INSTRUMENT TRIP SETPOINT TABLE				
TEXT 3.0	0	11/18/2002		
Title: TECHNICAL REQUIREMENT FOR OPERATION (TRO) APPLICABILITY & SURVEILLANCE (TRS) APPLICABILITY				
TEXT 3.1.1	0	11/18/2002		
Title: REACTIVITY CONTROL SYSTEMS ANTICIPATED TRANSIENT WITHOUT SCRAM ALTERNATE ROD INJECTION (ATWS-ARI) INSTRUMENTATION				
TEXT 3.1.2	0	11/18/2002		
Title: REACTIVITY CONTROL SYSTEMS CONTROL ROD DRIVE (CRD) HOUSING SUPPORT				
TEXT 3.1.3	2	11/22/2005		
Title: REACTIVITY CONTROL SYSTEMS CONTROL ROD BLOCK INSTRUMENTATION				
TEXT 3.1.4	0	11/18/2002		
Title: REACTIVITY CONTROL SYSTEMS CONTROL ROD SCRAM ACCUMULATORS INSTRUMENTATION & CHECK VALVE				
TEXT 3.2.1	5	11/04/2005		
Title: CORE OPERATING LIMITS REPORT (COLR)				

CONTROLLED

SSES MANUAL

Manual Name: TRM1

Manual Title: TECHNICAL REOUIREMENTS MANUAL UNIT 1

Manual Name: TRM1

Manual Title: TECHNICAL REQUIREMENTS MANUAL UNIT 1

TEXT 3.4.2 0 11/18/2002
Title: REACTOR COOLANT SYSTEM STRUCTURAL INTEGRITY

TEXT 3.4.3 0 11/18/2002
Title: REACTOR COOLANT SYSTEM HIGH/LOW PRESSURE INTERFACE LEAKAGE MONITORS

TEXT 3.4.4 1 12/14/2004
Title: REACTOR COOLANT SYSTEM REACTOR RECIRCULATION FLOW AND ROD LINE LIMIT

TEXT 3.4.5 0 11/18/2002
Title: REACTOR COOLANT SYSTEM REACTOR VESSEL MATERIALS

TEXT 3.5.1 1 02/04/2005
Title: EMERGENCY CORE COOLING AND RCIC ADS MANUAL INHIBIT

TEXT 3.5.2 0 11/18/2002
Title: EMERGENCY CORE COOLING AND RCIC ECCS AND RCIC SYSTEM MONITORING INSTRUMENTATION

TEXT 3.5.3 0 11/18/2002
Title: EMERGENCY CORE COOLING AND RCIC LONG TERM NITROGEN SUPPLY TO ADS

TEXT 3.6.1 0 11/18/2002
Title: CONTAINMENT VENTING OR PURGING

TEXT 3.6.2 0 11/18/2002
Title: CONTAINMENT SUPPRESSION CHAMBER-TO-DRYWELL VACUUM BREAKER POSITION INDICATION

TEXT 3.6.3 0 11/18/2002
Title: CONTAINMENT SUPPRESSION POOL ALARM INSTRUMENTATION

TEXT 3.6.4 0 11/18/2002
Title: CONTAINMENT PRIMARY CONTAINMENT CLOSED SYSTEM BOUNDARIES

TEXT 3.7.1 0 11/18/2002
Title: PLANT SYSTEMS EMERGENCY SERVICE WATER SYSTEM (ESW) SHUTDOWN

Manual Name: TRM1

Manual Title: TECHNICAL REQUIREMENTS MANUAL UNIT 1

TEXT 3.7.2 0 11/18/2002
Title: PLANT SYSTEMS ULTIMATE HEAT SINK (UHS) AND GROUND WATER LEVEL

TEXT 3.7.3.1 0 11/18/2002
Title: PLANT SYSTEMS FIRE SUPPRESSION WATER SUPPLY SYSTEM

TEXT 3.7.3.2 1 08/24/2005
Title: PLANT SYSTEMS SPRAY AND SPRINKLER SYSTEMS

TEXT 3.7.3.3 2 08/18/2005
Title: PLANT SYSTEMS CO2 SYSTEMS

TEXT 3.7.3.4 0 11/18/2002
Title: PLANT SYSTEMS HALON SYSTEMS

TEXT 3.7.3.5 0 11/18/2002
Title: PLANT SYSTEMS FIRE HOSE STATIONS

TEXT 3.7.3.6 0 11/18/2002
Title: PLANT SYSTEMS YARD FIRE HYDRANTS AND HYDRANT HOSE HOUSES

TEXT 3.7.3.7 0 11/18/2002
Title: PLANT SYSTEMS FIRE RATED ASSEMBLIES

TEXT 3.7.3.8 4 09/08/2005
Title: PLANT SYSTEMS FIRE DETECTION INSTRUMENTATION

TEXT 3.7.4 0 11/18/2002
Title: PLANT SYSTEMS SOLID RADWASTE SYSTEM

TEXT 3.7.5.1 0 11/18/2002
Title: PLANT SYSTEMS MAIN CONDENSER OFFGAS HYDROGEN MONITOR

TEXT 3.7.5.2 0 11/18/2002
Title: PLANT SYSTEMS MAIN CONDENSER OFFGAS EXPLOSIVE GAS MIXTURE

Manual Name: TRM1

Manual Title: TECHNICAL REQUIREMENTS MANUAL UNIT 1

TEXT 3.7.5.3 0 11/18/2002
Title: PLANT SYSTEMS LIQUID HOLDUP TANKS

TEXT 3.7.6 1 03/01/2005
Title: PLANT SYSTEMS ESSW PUMPHOUSE VENTILATION

TEXT 3.7.7 0 11/18/2002
Title: PLANT SYSTEMS MAIN CONDENSER OFFGAS PRETREATMENT LOGARITHMIC RADIATION MONITORING

TEXT 3.7.8 1 12/14/2004
Title: PLANT SYSTEMS SNUBBERS

TEXT 3.7.9 0 11/18/2002
Title: PLANT SYSTEMS CONTROL STRUCTURE HVAC

TEXT 3.7.10 1 12/14/2004
Title: PLANT SYSTEMS SPENT FUEL STORAGE POOLS (SFSPS)

TEXT 3.8.1 1 02/04/2005
Title: ELECTRICAL POWER PRIMARY CONTAINMENT PENETRATION CONDUCTOR OVERCURRENT PROTECTIVE DEVICES

TEXT 3.8.2.1 1 12/14/2004
Title: ELECTRICAL POWER MOTOR OPERATED VALVES (MOV) THERMAL OVERLOAD PROTECTION - CONTINUOUS

TEXT 3.8.2.2 2 12/14/2004
Title: ELECTRICAL POWER MOTOR OPERATED VALVES (MOV) THERMAL OVERLOAD PROTECTION - AUTOMATIC

TEXT 3.8.3 0 11/18/2002
Title: ELECTRICAL POWER DIESEL GENERATOR (DG) MAINTENANCE ACTIVITIES

TEXT 3.8.4 0 11/18/2002
Title: ELECTRICAL POWER 24 VDC ELECTRICAL POWER SUBSYSTEM

TEXT 3.8.5 0 11/18/2002
Title: ELECTRICAL POWER DEGRADED VOLTAGE PROTECTION

Manual Name: TRM1

Manual Title: TECHNICAL REQUIREMENTS MANUAL UNIT 1

TEXT 3.8.6 0 11/18/2002
Title: ELECTRICAL POWER EMERGENCY SWITCHGEAR ROOM COOLING

TEXT 3.9.1 0 11/18/2002
Title: REFUELING OPERATIONS DECAY TIME

TEXT 3.9.2 0 11/18/2002
Title: REFUELING OPERATIONS COMMUNICATIONS

TEXT 3.9.3 0 11/18/2002
Title: REFUELING OPERATIONS REFUELING PLATFORM

TEXT 3.10.1 0 11/18/2002
Title: MISCELLANEOUS SEAL SOURCE CONTAMINATION

TEXT 3.10.2 0 11/18/2002
Title: MISCELLANEOUS SHUTDOWN MARGIN TEST RPS INSTRUMENTATION

TEXT 3.10.3 0 11/18/2002
Title: MISCELLANEOUS INDEPENDENT SPENT FUEL STORAGE INSTALLATION (ISFSI)

TEXT 3.10.4 0 11/18/2002
Title: MISCELLANEOUS LEADING EDGE FLOW METER (LEFM)

TEXT 3.11.1.1 0 11/18/2002
Title: RADIOACTIVE EFFLUENTS LIQUID EFFLUENTS CONCENTRATION

TEXT 3.11.1.2 0 11/18/2002
Title: RADIOACTIVE EFFLUENTS LIQUID EFFLUENTS DOSE

TEXT 3.11.1.3 0 11/18/2002
Title: RADIOACTIVE EFFLUENTS LIQUID WASTE TREATMENT SYSTEM

TEXT 3.11.1.4 1 12/14/2004
Title: RADIOACTIVE EFFLUENTS LIQUID RADWASTE EFFLUENT MONITORING INSTRUMENTATION

Manual Name: TRM1

Manual Title: TECHNICAL REQUIREMENTS MANUAL UNIT 1

TEXT 3.11.1.5 1 12/14/2004
Title: RADIOACTIVE EFFLUENTS RADIOACTIVE LIQUID PROCESS MONITORING INSTRUMENTATION

TEXT 3.11.2.1 2 08/24/2005
Title: RADIOACTIVE EFFLUENTS DOSE RATE

TEXT 3.11.2.2 0 11/18/2002
Title: RADIOACTIVE EFFLUENTS DOSE - NOBLE GASES

TEXT 3.11.2.3 0 11/18/2002
Title: RADIOACTIVE EFFLUENTS DOSE - IODINE, TRITIUM, AND RADIONUCLIDES IN PARTICULATE FORM

TEXT 3.11.2.4 0 11/18/2002
Title: RADIOACTIVE EFFLUENTS GASEOUS RADWASTE TREATMENT SYSTEM

TEXT 3.11.2.5 1 05/20/2005
Title: RADIOACTIVE EFFLUENTS VENTILATION EXHAUST TREATMENT SYSTEM

TEXT 3.11.2.6 2 12/14/2004
Title: RADIOACTIVE EFFLUENTS RADIOACTIVE GASEOUS EFFLUENT MONITORING INSTRUMENTATION

TEXT 3.11.3 0 11/18/2002
Title: RADIOACTIVE EFFLUENTS TOTAL DOSE

TEXT 3.11.4.1 1 12/14/2004
Title: RADIOACTIVE EFFLUENTS MONITORING PROGRAM

TEXT 3.11.4.2 1 12/14/2004
Title: RADIOACTIVE EFFLUENTS LAND USE CENSUS

TEXT 3.11.4.3 0 11/18/2002
Title: RADIOACTIVE EFFLUENTS INTERLABORATORY COMPARISON PROGRAM

TEXT 3.12.1 0 11/19/2002
Title: LOADS CONTROL PROGRAM CRANE TRAVEL-SPENT FUEL POOL STORAGE POOL

Manual Name: TRM1

Manual Title: TECHNICAL REQUIREMENTS MANUAL UNIT 1

TEXT 3.12.2 0 11/19/2002
Title: LOADS CONTROL PROGRAM HEAVY LOADS REQUIREMENTS

TEXT 3.12.3 0 11/19/2002
Title: LOADS CONTROL PROGRAM LIGHT LOADS REQUIREMENT

TEXT B3.0 0 11/19/2002
Title: APPLICABILITY BASES TECHNICAL REQUIREMENT FOR OPERATION (TRO) APPLICABILITY

TEXT B3.1.1 0 11/19/2002
Title: REACTIVITY CONTROL SYSTEMS BASES ANTICIPATED TRANSIENT WITHOUT SCRAM ALTERNATE ROD INJECTION (ATWS-ARI) INSTRUMENTATION

TEXT B3.1.2 0 11/19/2002
Title: REACTIVITY CONTROL SYSTEMS BASES CONTROL ROD DRIVE (CRD) HOUSING SUPPORT

TEXT B3.1.3 2 11/22/2005
Title: REACTIVITY CONTROL SYSTEMS BASES CONTROL ROD BLOCK INSTRUMENTATION

TEXT B3.1.4 0 11/19/2002
Title: REACTIVITY CONTROL SYSTEMS BASES CONTROL ROD SCRAM ACCUMULATORS INSTRUMENTATION AND CHECK VALVE

TEXT B3.2.1 0 11/19/2002
Title: CORE OPERATING LIMITS BASES CORE OPERATING LIMITS REPORT (COLR)

TEXT B3.3.1 0 11/19/2002
Title: INSTRUMENTATION BASES RADIATION MONITORING INSTRUMENTATION

TEXT B3.3.2 0 11/19/2002
Title: INSTRUMENTATION BASES SEISMIC MONITORING INSTRUMENTATION

TEXT B3.3.3 1 02/04/2005
Title: INSTRUMENTATION BASES METEOROLOGICAL MONITORING INSTRUMENTATION

TEXT B3.3.4 1 07/06/2005
Title: INSTRUMENTATION BASES TRM POST ACCIDENT MONITORING (PAM) INSTRUMENTATION

Manual Name: TRM1

Manual Title: TECHNICAL REQUIREMENTS MANUAL UNIT 1

TEXT B3.3.5 0 11/19/2002
Title: INSTRUMENTATION BASES THIS PAGE INTENTIONALLY LEFT BLANK

TEXT B3.3.6 3 10/19/2005
Title: INSTRUMENTATION BASES TRM ISOLATION ACTUATION INSTRUMENTATION

TEXT B3.3.7 0 11/19/2002
Title: INSTRUMENTATION BASES MAIN TURBINE OVERSPEED PROTECTION SYSTEM

TEXT B3.3.8 1 10/22/2003
Title: INSTRUMENTATION BASES TRM REACTOR PROTECTION SYSTEM (RPS) INSTRUMENTATION

TEXT B3.3.9 1 11/22/2004
Title: INSTRUMENTATION BASES LPRM UPSCALE ALARM INSTRUMENTATION

TEXT B3.3.10 0 11/19/2002
Title: INSTRUMENTATION BASES REACTOR RECIRCULATION PUMP MG SET STOPS

TEXT B3.3.11 1 10/22/2003
Title: INSTRUMENTATION BASES MVP ISOLATION INSTRUMENTATION

TEXT B3.4.1 0 11/19/2002
Title: REACTOR COOLANT SYSTEM BASES REACTOR COOLANT SYSTEM CHEMISTRY

TEXT B3.4.2 0 11/19/2002
Title: REACTOR COOLANT SYSTEM BASES STRUCTURAL INTEGRITY

TEXT B3.4.3 0 11/19/2002
Title: REACTOR COOLANT SYSTEM BASES HIGH/LOW PRESSURE INTERFACE LEAKAGE MONITOR

TEXT B3.4.4 0 11/19/2002
Title: REACTOR COOLANT SYSTEM BASES REACTOR RECIRCULATION FLOW AND ROD LINE LIMIT

TEXT B3.4.5 0 11/19/2002
Title: REACTOR COOLANT SYSTEM BASES REACTOR VESSEL MATERIALS

Manual Name: TRM1

Manual Title: TECHNICAL REQUIREMENTS MANUAL UNIT 1

TEXT B3.5.1 0 11/19/2002
Title: ECCS AND RCIC BASES ADS MANUAL INHIBIT

TEXT B3.5.2 0 11/19/2002
Title: ECCS AND RCIC BASES ECCS AND RCIC SYSTEM MONITORING INSTRUMENTATION

TEXT B3.5.3 0 11/19/2002
Title: ECCS AND RCIC BASES LONG TERM NITROGEN SUPPLY TO ADS

TEXT B3.6.1 0 11/19/2002
Title: CONTAINMENT BASES VENTING OR PURGING

TEXT B3.6.2 0 11/19/2002
Title: CONTAINMENT BASES SUPPRESSION CHAMBER-TO-DRYWELL VACUUM BREAKER POSITION INDICATION

TEXT B3.6.3 0 11/19/2002
Title: CONTAINMENT BASES SUPPRESSION POOL ALARM INSTRUMENTATION

TEXT B3.6.4 1 12/14/2004
Title: CONTAINMENT BASES PRIMARY CONTAINMENT CLOSED SYSTEM BOUNDARIES

TEXT B3.7.1 0 11/19/2002
Title: PLANT SYSTEMS BASES EMERGENCY SERVICE WATER SYSTEM (SHUTDOWN)

TEXT B3.7.2 0 11/19/2002
Title: PLANT SYSTEMS BASES ULTIMATE HEAT SINK (UHS) GROUND WATER LEVEL

TEXT B3.7.3.1 0 11/19/2002
Title: PLANT SYSTEMS BASES FIRE SUPPRESSION WATER SUPPLY SYSTEM

TEXT B3.7.3.2 1 08/24/2005
Title: PLANT SYSTEMS BASES SPRAY AND SPRINKLER SYSTEMS

TEXT B3.7.3.3 0 11/19/2002
Title: PLANT SYSTEMS BASES CO2 SYSTEMS

Manual Name: TRM1

Manual Title: TECHNICAL REQUIREMENTS MANUAL UNIT 1

TEXT B3.7.3.4 0 11/19/2002
Title: PLANT SYSTEMS BASES HALON SYSTEMS

TEXT B3.7.3.5 0 11/19/2002
Title: PLANT SYSTEMS BASES FIRE HOSE STATIONS

TEXT B3.7.3.6 0 11/19/2002
Title: PLANT SYSTEMS BASES YARD FIRE HYDRANTS AND HYDRANT HOSE HOUSES

TEXT B3.7.3.7 0 11/19/2002
Title: PLANT SYSTEMS BASES FIRE RATED ASSEMBLIES

TEXT B3.7.3.8 1 01/12/2004
Title: PLANT SYSTEMS BASES FIRE DETECTION INSTRUMENTATION

TEXT B3.7.4 0 11/19/2002
Title: PLANT SYSTEMS BASES SOLID RADWASTE SYSTEM

TEXT B3.7.5.1 0 11/19/2002
Title: PLANT SYSTEMS BASES MAIN CONDENSER OFFGAS HYDROGEN MONITOR

TEXT B3.7.5.2 0 11/19/2002
Title: PLANT SYSTEMS BASES MAIN CONDENSER OFFGAS EXPLOSIVE GAS MIXTURE

TEXT B3.7.5.3 0 11/19/2002
Title: PLANT SYSTEMS BASES LIQUID HOLDUP TANKS

TEXT B3.7.6 1 03/01/2005
Title: PLANT SYSTEMS BASES ESSW PUMPHOUSE VENTILATION

TEXT B3.7.7 0 11/19/2002
Title: PLANT SYSTEMS BASES MAIN CONDENSER OFFGAS PRETREATMENT LOGARITHMIC RADIATION MONITORING INSTRUMENTATION

TEXT B3.7.8 1 12/14/2004
Title: PLANT SYSTEMS BASES SNUBBERS

Manual Name: TRM1

Manual Title: TECHNICAL REQUIREMENTS MANUAL UNIT 1

TEXT B3.7.9 1 12/14/2004
Title: PLANT SYSTEMS BASES CONTROL STRUCTURE HVAC

TEXT B3.7.10 1 12/14/2004
Title: PLANT SYSTEMS BASES SPENT FUEL STORAGE POOLS

TEXT B3.8.1 1 02/04/2005
Title: ELECTRICAL POWER BASES PRIMARY CONTAINMENT PENETRATION CONDUCTOR OVERCURRENT PROTECTIVE DEVICES

TEXT B3.8.2.1 0 11/19/2002
Title: ELECTRICAL POWER BASES MOTOR OPERATED VALVES (MOV) THERMAL OVERLOAD PROTECTION - CONTINUOUS

TEXT B3.8.2.2 1 09/17/2004
Title: ELECTRICAL POWER BASES MOTOR OPERATED VALVES (MOV) THERMAL OVERLOAD PROTECTION - AUTOMATIC

TEXT B3.8.3 0 11/19/2002
Title: ELECTRICAL POWER BASES DIESEL GENERATOR (DG) MAINTENANCE ACTIVITIES

TEXT B3.8.4 0 11/19/2002
Title: ELECTRICAL POWER BASES 24 VDC ELECTRICAL POWER SUBSYSTEM

TEXT B3.8.5 0 11/19/2002
Title: ELECTRICAL POWER BASES DEGRADED VOLTAGE PROTECTION

TEXT B3.8.6 1 02/04/2005
Title: ELECTRICAL POWER BASES EMERGENCY SWITCHGEAR ROOM COOLING

TEXT B3.9.1 0 11/19/2002
Title: REFUELING OPERATIONS BASES DECAY TIME

TEXT B3.9.2 0 11/19/2002
Title: REFUELING OPERATIONS BASES COMMUNICATIONS

TEXT B3.9.3 0 11/19/2002
Title: REFUELING OPERATIONS BASES REFUELING PLATFORM

Manual Name: TRM1

Manual Title: TECHNICAL REQUIREMENTS MANUAL UNIT 1

TEXT B3.10.1 0 11/19/2002
Title: MISCELLANEOUS BASES SEALED SOURCE CONTAMINATION

TEXT B3.10.2 0 11/19/2002
Title: MISCELLANEOUS BASES SHUTDOWN MARGIN TEST RPS INSTRUMENTATION

TEXT B3.10.3 0 11/19/2002
Title: MISCELLANEOUS BASES INDEPENDENT SPENT FUEL STORAGE INSTALLATION (ISFSI)

TEXT B3.10.4 0 11/19/2002
Title: MISCELLANEOUS BASES LEADING EDGE FLOW METER (LEFM)

TEXT B3.11.1.1 0 11/19/2002
Title: RADIOACTIVE EFFLUENTS BASES LIQUID EFFLUENTS CONCENTRATION

TEXT B3.11.1.2 0 11/19/2002
Title: RADIOACTIVE EFFLUENTS BASES LIQUID EFFLUENTS DOSE

TEXT B3.11.1.3 0 11/19/2002
Title: RADIOACTIVE EFFLUENTS BASES LIQUID WASTE TREATMENT SYSTEM

TEXT B3.11.1.4 0 11/19/2002
Title: RADIOACTIVE EFFLUENTS BASES LIQUID RADWASTE EFFLUENT MONITORING INSTRUMENTATION

TEXT B3.11.1.5 0 11/19/2002
Title: RADIOACTIVE EFFLUENTS BASES RADIOACTIVE LIQUID PROCESS MONITORING INSTRUMENTATION

TEXT B3.11.2.1 1 12/14/2004
Title: RADIOACTIVE EFFLUENTS BASES DOSE RATE

TEXT B3.11.2.2 0 11/19/2002
Title: RADIOACTIVE EFFLUENTS BASES DOSE - NOBLE GASES

TEXT B3.11.2.3 0 11/19/2002
Title: RADIOACTIVE EFFLUENTS BASES DOSE - IODINE, TRITIUM, AND RADIONUCLIDES IN PARTICULATES FORM

Manual Name: TRM1

Manual Title: TECHNICAL REQUIREMENTS MANUAL UNIT 1

TEXT B3.11.2.4 0 11/19/2002
Title: RADIOACTIVE EFFLUENTS BASES GASEOUS RADWASTE TREATMENT SYSTEM

TEXT B3.11.2.5 3 05/20/2005
Title: RADIOACTIVE EFFLUENTS BASES VENTILATION EXHAUST TREATMENT SYSTEM

TEXT B3.11.2.6 1 01/27/2004
Title: RADIOACTIVE EFFLUENTS BASES RADIOACTIVE GASEOUS EFFLUENT MONITORING INSTRUMENTATION

TEXT B3.11.3 0 11/19/2002
Title: RADIOACTIVE EFFLUENTS BASES TOTAL DOSE

TEXT B3.11.4.1 1 12/14/2004
Title: RADIOACTIVE EFFLUENTS BASES MONITORING PROGRAM

TEXT B3.11.4.2 0 11/19/2002
Title: RADIOACTIVE EFFLUENTS BASES LAND USE CENSUS

TEXT B3.11.4.3 0 11/19/2002
Title: RADIOACTIVE EFFLUENTS BASES INTERLABORATORY COMPARISON PROGRAM

TEXT B3.12.1 0 11/19/2002
Title: LOADS CONTROL PROGRAM BASES CRANE TRAVEL-SPENT FUEL STORAGE POOL

TEXT B3.12.2 0 11/19/2002
Title: LOADS CONTROL PROGRAM BASES HEAVY LOADS REQUIREMENTS

TEXT B3.12.3 0 11/19/2002
Title: LOADS CONTROL PROGRAM BASES LIGHT LOADS REQUIREMENTS

TEXT 4.1 0 08/31/1998
Title: ADMINISTRATIVE CONTROLS ORGANIZATION

TEXT 4.2 0 08/31/1998
Title: ADMINISTRATIVE CONTROLS REPORTABLE EVENT ACTION

Manual Name: TRM1

Manual Title: TECHNICAL REQUIREMENTS MANUAL UNIT 1

TEXT 4.3 0 08/31/1998
Title: ADMINISTRATIVE CONTROLS SAFETY LIMIT VIOLATION

TEXT 4.4 0 08/31/1998
Title: ADMINISTRATIVE CONTROLS PROCEDURES & PROGRAMS

TEXT 4.5 0 08/31/1998
Title: ADMINISTRATIVE CONTROLS REPORTING REQUIREMENTS

TEXT 4.6 0 08/31/1998
Title: ADMINISTRATIVE CONTROLS RADIATION PROTECTION PROGRAM

TEXT 4.7 0 08/31/1998
Title: ADMINISTRATIVE CONTROLS TRAINING

Section	Title	Effective Date
TOC	TABLE OF CONTENTS	01/28/2005
1.0	USE AND APPLICATION	
	Pages TRM / 1.0-1 through TRM / 1.0-3	10/04/2002
2.0	PLANT PROGRAMS	
	Page 2.0-1	08/31/1998
	Pages TRM / 2.0-2 and TRM / 2.0-3	01/28/2005
	Page TRM / 2.0-4	06/25/2002
	Page TRM / 2.0-5	04/02/1999
	Pages TRM / 2.0-6 and TRM / 2.0-7	11/15/2004
	Page TRM / 2.0-8	12/03/2004
	Pages TRM / 2.0-9 through TRM / 2.0-11	11/15/2004
	Pages TRM / 2.0-12 through TRM / 2.0-15	11/15/2005
3.0	APPLICABILITY	
	Pages TRM / 3.0-1 and TRM / 3.0-2	04/08/1999
	Pages TRM / 3.0-3	03/15/2002
	Page TRM / 3.0-4	04/08/1999
3.1	REACTIVITY CONTROL SYSTEMS	
	Pages 3.1-1 through 3.1-6	08/31/1998
	Pages TRM / 3.1-7 and TRM / 3.1-8	11/15/2005
	Pages TRM / 3.1-9 and TRM / 3.1-9a	02/18/1999
	Page TRM / 3.1-10	02/18/1999
3.2	CORE OPERATING LIMITS REPORT	
	Page TRM / 3.2-1	07/07/1999
	Pages TRM / 3.2-2 through TRM / 3.2-38	10/31/2005
3.3	INSTRUMENTATION	
	Pages TRM / 3.3-1 through TRM / 3.3-3	07/16/1999
	Page TRM / 3.3-4	11/28/2000
	Pages 3.3-5 through 3.3-8	08/31/1998
	Pages TRM / 3.3-9 and TRM / 3.3-9a	12/17/1998
	Page TRM / 3.3-10	12/17/1998
	Pages TRM / 3.3-11 and TRM / 3.3-11a	06/02/2005
	Page TRM / 3.3-12	03/30/2001
	Page TRM / 3.3-13	09/13/2005
	Page TRM / 3.3-14	12/14/1998
	Page TRM / 3.3-15	10/22/2003
	Page TRM / 3.3-16	06/27/2001
	Pages TRM / 3.3-17 and TRM / 3.3-18	06/14/2002
	Pages TRM / 3.3-19 through TRM / 3.3-21	10/22/2003
	Page TRM / 3.3-22	11/15/2004
	Pages TRM / 3.3-22a through TRM / 3.3-22d	11/15/2004
	Page TRM / 3.3-23	12/03/2004

CONTROLLED

Section	Title	Effective Date
	Pages TRM / 3.3-24 and TRM / 3.3-25	05/16/2003
	Page TRM / 3.3-26	10/22/2003
3.4	REACTOR COOLANT SYSTEM	
	Pages 3.4-1 through 3.4-5	10/23/1998
	Pages 3.4-6 through 3.4-11	08/31/1998
	Page TRM / 3.4-12	12/03/2004
	Page 3.4-13	08/31/1998
3.5	EMERGENCY CORE COOLING AND RCIC	
	Page TRM / 3.5-1	01/28/2005
	Pages 3.5-2 and 3.5-3	08/31/1998
	Page TRM / 3.5-4	04/17/2000
	Pages 3.5-5 through 3.5-7	08/31/1998
3.6	CONTAINMENT	
	Pages 3.6-1 through 3.6-3	08/31/1998
	Page TRM / 3.6-4	01/07/2002
	Page 3.6-5	08/31/1998
	Pages TRM / 3.6-6 through TRM / 3.6-8	12/31/2002
3.7	PLANT SYSTEMS	
	Pages 3.7-1 through 3.7-3	08/31/1998
	Pages TRM / 3.7-4 through TRM / 3.7-8	08/02/1999
	Pages TRM / 3.7-9 and TRM / 3.7-10	08/16/2005
	Page TRM / 3.7-11	12/29/1999
	Pages TRM / 3.7-12 and TRM / 3.7.13	08/02/1999
	Page TRM / 3.7-14	08/09/2005
	Pages TRM / 3.7-15 through TRM / 3.7-27	08/02/1999
	Pages TRM / 3.7-28 and TRM / 3.7-29	08/09/2005
	Page TRM / 3.7-30	08/25/2005
	Pages TRM / 3.7-31 and TRM 3.7-32	11/16/2001
	Page TRM / 3.7-33	01/09/2004
	Page TRM / 3.7-34	11/16/2001
	Page TRM / 3.7-34a	10/05/2002
	Pages TRM / 3.7-35 through TRM / 3.7-37	02/01/1999
	Pages 3.7-38 through 3.7-40	08/31/1998
	Pages TRM / 3.7-41 and TRM / 3.7-41a	02/14/2005
	Pages 3.7-42 and 3.7-43	08/31/1998
	Page TRM / 3.7-44	12/03/2004
	Pages 3.7-45 through 3.7-48	10/13/1998
	Page TRM / 3.7-49	03/08/2003
	Pages TRM / 3.7-50 and TRM / 3.7-51	03/09/2001
	Pages TRM / 3.7-52	12/03/2004
	Page TRM / 3.7-53	04/15/2003
	Page TRM / 3.7-54	07/29/1999

Section	Title	Effective Date
3.8	ELECTRICAL POWER	
	Page TRM / 3.8-1	04/02/2002
	Pages TRM / 3.8-2 through TRM / 3.8-4	01/28/2005
	Pages TRM / 3.8-5 and TRM / 3.8-6	04/02/2002
	Pages TRM / 3.8-7 through TRM / 3.8-10	12/03/2004
	Page TRM / 3.8-11	08/10/2004
	Page TRM / 3.8-12	12/03/2004
	Pages 3.8-13 and 3.8-14	08/31/1998
	Pages TRM / 3.8-15 through TRM / 3.8-17	04/02/2002
	Page 3.8-18	08/31/1998
	Page TRM / 3.8-19	04/02/2002
	Page 3.8-20	08/31/1998
	Pages TRM / 3.8-21 through TRM / 3.8-23	06/06/1999
	Pages 3.8-24 and 3.8-25	08/31/1998
3.9	REFUELING OPERATIONS	
	Pages 3.9-1 through 3.9-3	08/31/1998
3.10	MISCELLANEOUS	
	Pages 3.10-1 through 3.10-4	08/31/1998
	Page TRM / 3.10-5	03/08/2003
	Page TRM / 3.10-6	06/05/2002
	Page TRM / 3.10-7	04/07/2000
	Page TRM / 3.10-8	04/17/2002
3.11	RADIOACTIVE EFFLUENTS	
	Pages 3.11-1 through 3.11-9	08/31/1998
	Page TRM / 3.11-10	12/03/2004
	Pages 3.11-11 and 3.11-12	08/31/1998
	Page 3.11-13	09/011998
	Page TRM / 3.11-14	12/03/2004
	Pages 3.11-15 and 3.11-16	09/01/1998
	Pages 3.11-17 and 3.11-18	08/31/1998
	Page TRM / 3.11-19	08/15/2005
	Pages 3.11-20 and 3.11-21	08/31/1998
	Page TRM / 3.11-22	04/02/2002
	Pages TRM / 3.11-23 and TRM / 3.11-24	05/13/2005
	Page 3.11-25	09/01/1998
	Pages TRM / 3.11-26 through TRM / 3.11-28	01/21/2004
	Page TRM / 3.11-29	12/03/2004
	Pages TRM / 3.11.30 through TRM / 3.11.32	01/21/2004
	Pages 3.11-33 through 3.11-37	08/31/1998
	Page TRM / 3.11-38	12/03/2004
	Pages 3.11-39 through 3.11-44	08/31/1998
	Page TRM / 3.11-45	12/03/2004
	Pages 3.11-46 and 3.11-47	08/31/1998

Section	Title	Effective Date
3.12	LOADS CONTROL PROGRAM Pages TRM / 3.12-1 through TRM / 3.12-5	02/05/1999
4.0	ADMINISTRATIVE CONTROLS Pages 4.0-1 through 4.0-8	08/31/199

Section	Title	Effective Date
B 3.0	APPLICABILITY BASES	
	Pages B 3.0-1 through B 3.0-10	08/31/1998
	Pages TRM / B 3.0-11 through TRM / B 3.0-15	03/15/2002
B 3.1	REACTIVITY CONTROL SYSTEMS BASES	
	Pages TRM / B 3.1-1 through TRM / B 3.1-3	07/13/1999
	Page B 3.1-4	08/31/1998
	Pages TRM / B 3.1-5 through TRM / B 3.1-7	11/15/2005
	Page TRM / B 3.1-8	02/18/1999
B 3.2	CORE OPERATING LIMITS BASES	
	Page B 3.2-1	08/31/1998
B 3.3	INSTRUMENTATION BASES	
	Page TRM / B 3.3-1	04/07/2000
	Page B 3.3-2	08/31/1998
	Pages TRM / B 3.3-3 and TRM / B 3.3-3A	01/31/2005
	Pages TRM / B 3.3-4 through TRM / B 3.3-6	06/02/2005
	Pages TRM / B 3.3-7 through TRM / B 3.3-9	03/30/2001
	Page B 3.3-10	08/31/1998
	Pages TRM / B 3.3-11 and TRM / B 3.3-12	09/13/2005
	Page TRM / B 3.3-13	12/03/2004
	Page TRM / B 3.3-14	06/25/2002
	Page TRM / B 3.3-14a	06/14/2002
	Page TRM / B 3.3-14b	06/14/2002
	Pages TRM / B 3.3-15 and TRM / B 3.3-16	10/22/2003
	Page TRM / B 3.3-17	11/15/2004
	Pages TRM / B 3.3-17a through TRM / B 3.3-17f	11/15/2004
	Pages TRM / B3.3-18 and TRM / B 3.3-19	05/16/2003
	Page TRM / B 3.3-20	10/22/2003
	Page TRM / B 3.3-21	05/16/2003
B 3.4	REACTOR COOLANT SYSTEM BASES	
	Pages B 3.4-1 through B 3.4-4	08/31/1998
	Page TRM / B 3.4-5	10/15/1999
	Page B 3.4-6	08/31/1998
B 3.5	ECCS AND RCIC BASES	
	Pages B 3.5-1 through B 3.5-5	08/31/1998
B 3.6	CONTAINMENT BASES	
	Page TRM / B 3.6-1	07/26/2001
	Page TRM / B 3.6-2	02/01/1999
	Page B 3.6-3	08/31/1998
	Page TRM / B 3.6-4	09/23/1999
	Page TRM / B 3.6-5	01/07/2002

Section	Title	Effective Date
	Pages TRM / B 3.6-6	12/03/2004
	Pages B.3.6-7 through TRM / B 3.6-11	12/31/2002
B 3.7	PLANT SYSTEMS BASES	
	Pages B 3.7-1 and B 3.7-2	08/31/1998
	Pages TRM / B 3.7-3 through TRM / B 3.7-5	08/02/1999
	Page TRM / B 3.7-6	08/16/2005
	Pages TRM / B 3.7-7 and TRM / B 3.7-7a	08/02/1999
	Pages TRM / B 3.7-8 through TRM / B 3.7-10	08/02/1999
	Page TRM / B 3.7-10a	08/02/1999
	Pages TRM / B 3.7-11 and TRM / B 3.7-11a	08/02/1999
	Pages TRM / B 3.7-12 through TRM / B 3.7-14	08/02/1999
	Page TRM / B 3.7-14a	08/02/1999
	Page TRM / B 3.7-14b	01/09/2004
	Pages TRM / B 3.7-15 and TRM / B 3.7-16	02/01/1999
	Pages B 3.7-17 through B 3.7-20	08/31/1998
	Pages TRM/B 3.7-21 and TRM/B 3.7-21a	02/14/2005
	Pages TRM/B 3.7-22 and TRM/B 3.7-23	04/07/2000
	Page B 3.7-24	08/31/1998
	Page TRM / B 3.7-25	12/03/2004
	Pages B 3.7-26 through B 3.7-30	08/31/1998
	Page TRM / B 3.7-31	12/03/2004
	Page TRM / B 3.7-32	03/09/2001
	Page TRM / B 3.7-33	04/15/2003
	Page TRM / B 3.7-34	12/03/2004
	Page TRM / B 3.7-35	07/05/2000
B 3.8	ELECTRICAL POWER BASES	
	Page TRM / B 3.8-1	04/02/2002
	Pages TRM / B 3.8-2 and TRM / B 3.8-2a	01/28/2005
	Page TRM / B 3.8-3	04/02/2002
	Page TRM / B 3.8-3a	04/02/2002
	Page TRM / B 3.8-4	08/10/2004
	Page TRM / B 3.8-4a	04/02/2002
	Page TRM / B 3.8-5	08/31/1998
	Pages TRM / B 3.8-6 through TRM / B 3.8-16	04/02/2002
	Page TRM / B 3.8-17	01/28/2005
B.3.9	REFUELING OPERATIONS BASES	
	Pages B 3.9-1 through B 3.9-7	08/31/1998
B 3.10	MISCELLANEOUS BASES	
	Pages B 3.10-1 through B 3.10-2	08/31/1998
	Page TRM / B 3.10-3	03/08/2003
	Pages TRM / B 3.10-4 and TRM / B 3.10-5	08/23/1999
	Pages TRM / B 3.10-6 and TRM / B 3.10-7	04/17/2002

Section	Title	Effective Date
B 3.11	RADIOACTIVE EFFLUENTS BASES	
	Pages B 3.11-1 through B 3.11-9	08/30/1998
	Page TRM / B 3.11-10	02/01/1999
	Pages TRM/B 3.11-11 and TRM/B 3.11-11a	04/07/2000
	Pages TRM/B 3.11-12 and TRM/B 3.11-13	02/01/1999
	Page TRM / B 3.11-14	12/03/2004
	Page TRM / B 3.11-15	02/01/1999
	Pages B 3.11-16 through B 3.11-19	08/30/1998
	Page TRM / B 3.11-20	04/02/2002
	Page TRM / B 3.11-20a	04/02/2002
	Pages TRM / B 3.11-21 through TRM / B 3.11.23a	05/13/2005
	Pages TRM / B 3.11-24 and TRM /B 3.11-25	01/21/2004
	Pages B 3.11-26 through B 3.11-28	08/30/1998
	Page TRM / B 3.11-29 and TRM / B 3.11-30	12/03/2004
	Pages B 3.7-31 through B 3.7-35	8/30/19998
	Page TRM / B 3.11-36	02/12/1999
B.3.12	LOADS CONTROL PROGRAM BASES	
	Pages TRM / B 3.12-1 through TRM / B 3.12-3	02/05/1999

TRM1 text LOES
11/9/05

2.0 PLANT PROGRAMS AND SETPOINTS

2.2 Instrument Trip Setpoint Table

The Instrument Trip Setpoint Limits in Table 2.2-1 are the Trip Setpoint value limits that were contained in the Instrumentation Setpoint tables for protection systems and other functions important to safety that were included in the scope of the original Standard Technical Specifications. Actual instrument setpoints are established utilizing the Allowable Values specified in the Technical Specifications and Technical Requirements. Allowable Values are established in the Reference LCOs and TROs identified in this Table. TRO references are enclosed in square brackets.

Instrumentation process setpoints for the listed subsystems and trip functions are set consistent with the Trip Setpoint Limit Column of Table 2.2-1. Actual setpoints are established in accordance with engineering procedures.

Alarm setpoints and other non-protection system trip settings as may be found in the Technical Specifications or in the Technical Requirements are not included in this table.

Reference NDAP-QA-1104 Setpoint Change Control

TABLE 2.2-1 (Page 1 of 8)
INSTRUMENTATION SETPOINTS

	SYSTEM/REFERENCE	LCO [TRO]	TRIP FUNCTION	TRIP SETPOINT
2.2.1	Reactor Protection			
2.2.1.1		3.3.1.1	Intermediate Range Monitor, Neutron Flux - High	≤ 120/125 divisions of full scale
2.2.1.2		3.3.1.1	Average Power Range Monitor, Neutron Flux - High Setdown	≤ 15% of RATED THERMAL POWER
2.2.1.3		3.3.1.1	Average Power Range Monitor, Flow Biased Simulated Thermal Power - High Two Loop Operation	See COLR - TRO 3.2
2.2.1.4		3.3.1.1	Average Power Range Monitor, Flow Biased Simulated Thermal Power - High Single Loop Operation	See COLR - TRO 3.2
2.2.1.5		3.3.1.1	Average Power Range Monitor, Flow Biased Simulated Thermal Power - High Flow Clamped	≤ 113.5% of RATED THERMAL POWER
2.2.1.6		3.3.1.1	Average Power Range Monitor, Fixed Neutron Flux - High	≤ 118% of RATED THERMAL POWER
2.2.1.7		3.3.1.1	Reactor Vessel Steam Dome Pressure - High	≤ 1087 psig
2.2.1.8		3.3.1.1	Reactor Vessel Water Level - Low, Level 3	≥ 13.0 inches [a]
2.2.1.9		3.3.1.1	Main Steam Isolation Valve - Closure	≤ 10% closed
2.2.1.10			This Section Not Used	
2.2.1.11		3.3.1.1	Drywell Pressure - High	≤ 1.72 psig
2.2.1.12		3.3.1.1	Scram Discharge Volume Water Level - High - Level Transmitter	≤ 65 gallons
2.2.1.13		3.3.1.1	Scram Discharge Volume Water Level - High - Float Switch	≤ 61 gallons
2.2.1.14		3.3.1.1	Turbine Stop Valve - Closure	≤ 5.5% closed
2.2.1.15		3.3.1.1	Turbine Control Valve Fast Closure, Trip Oil Pressure - Low	≥ 500 psig

(continued)

[a] See Figure 2.2-1

TABLE 2.2-1 (Page 2 of 8)
INSTRUMENTATION SETPOINTS

	SYSTEM/REFERENCE LCO [TRO]	TRIP FUNCTION	TRIP SETPOINT
2.2.1.16 OPRM Instrumentation			
2.2.1.16.1	3.3.1.3	Sp Cell Signal Amplitude	See COLR – TRO 3.2
2.2.1.16.2	3.3.1.3	N2 Confirmation Count Permissive	See COLR – TRO 3.2
2.2.1.16.3	[3.3.9]	TOL Period Confirmation Tolerance	0.10 sec
2.2.1.16.4	[3.3.9]	Ta Averaging Filter	5 sec
2.2.1.16.5	[3.3.9]	Fc Conditioning Filter Cutoff Frequency	1.5 Hz
2.2.1.16.6	[3.3.9]	Tmin Minimum Oscillation Period	1.0 sec
2.2.1.16.7	[3.3.9]	Tmax Maximum Oscillation Period	3.5 sec
2.2.1.16.8	[3.3.9]	Noise Floor Peak Discrimination Threshold	1
2.2.1.16.9	[3.3.9]	Minimum LPRM/Cell Cell Operability Requirement	2
2.2.1.16.10	[3.3.9]	S1 Peak Threshold Setpoint	1.20
2.2.1.16.11	[3.3.9]	S2 Valley Threshold Setpoint	0.85
2.2.1.16.12	[3.3.9]	Smax Max. Amplitude Trip Setpoint	1.50
2.2.1.16.13	[3.3.9]	DR3 Growth Rate Factor Setpoint	1.60
2.2.1.16.14	[3.3.9]	T1 lo S1 to S2 Timer Range	0.5 sec
2.2.1.16.15	[3.3.9]	T1 hi S1 to S2 Timer Range	1.75 sec
2.2.1.16.16	[3.3.9]	T2 lo S2 to (S3 or Smax) Timer Range	0.5 sec
2.2.1.16.17	[3.3.9]	T2 hi S2 to (S3 or Smax) Timer Range	1.75 sec
2.2.2 Isolation Actuation Instrumentation			
2.2.2.1 Primary Containment Isolation			
2.2.2.1.1	3.3.6.1	Reactor Vessel Water Level Low, Level 3	≥ 13.0 inches[a]
2.2.2.1.2	3.3.6.1	Reactor Vessel Water Level Low Low, Level 2	≥ -38.0 inches[a]
2.2.2.1.3	3.3.6.1	Reactor Vessel Water Level Low Low Low, Level 1	≥ -129 inches[a]
2.2.2.1.4	3.3.6.1	Drywell Pressure - High	≤ 1.72 psig
2.2.2.1.5	3.3.6.1/[3.3.6]	SGTS Exhaust Radiation - High	≤ 23.0 mR/hr
2.2.2.1.6	[3.3.6]	Main Steam Line Radiation – High High	≤ 15 x full power background without hydrogen injection

(continued)

[a] See Figure 2.2-1

TABLE 2.2-1 (Page 3 of 8)
INSTRUMENTATION SETPOINTS

	SYSTEM/REFERENCE LCO [TRO]	TRIP FUNCTION	TRIP SETPOINT
2.2.2.2	Secondary Containment Isolation		
2.2.2.2.1	3.3.6.2	Reactor Vessel Water Level - Low Low, Level 2	≥ -38.0 inches[a]
2.2.2.2.2	3.3.6.2	Drywell Pressure - High	≤ 1.72 psig
2.2.2.2.3	3.3.6.2	Refuel Floor High Exhaust Duct Radiation - High	≤ 18 mR/hr
2.2.2.2.4	3.3.6.2	Railroad Access Shaft Exhaust Duct Radiation - High	≤ 5 mR/hr
2.2.2.2.5	3.3.6.2	Refuel Floor Wall Exhaust Duct Radiation - High	≤ 21 mR/hr
2.2.2.3	Main Steam Line Isolation		
2.2.2.3.1	3.3.6.1	Reactor Vessel Water Level - Low Low Low, Level 1	≥ -129 inches[a]
2.2.2.3.2	3.3.6.1	Main Steam Line Pressure - Low	≥ 861 psig
2.2.2.3.3	3.3.6.1	Main Steam Line Flow - High	≤ 113 psid
2.2.2.3.4	3.3.6.1	Condenser Vacuum - Low	≥ 9.0 inches Hg vacuum
2.2.2.3.5	3.3.6.1	Reactor Building Main Steam Line Tunnel Temperature - High	≤ 177°F
2.2.2.3.6		This Section Not Used	
2.2.2.3.7	[3.3.6]	Reactor Building Main Steam Line Tunnel Δ Temperature - High	≤ 99°F
2.2.2.3.8	[3.3.6]	Turbine Building Main Steam Tunnel Temperature - High	≤ 197°F
2.2.2.4	Reactor Water Cleanup System Isolation		
2.2.2.4.1	3.3.6.1	Reactor Vessel Water Level - Low Low, Level 2	≥ -38 inches[a]
2.2.2.4.2	3.3.6.1	RWCU Δ Flow - High	≤ 59 gpm
2.2.2.4.3	3.3.6.1	RWCU Flow - High	≤ 462 gpm
2.2.2.4.4	3.3.6.1	RWCU Penetration Area Temperature - High	≤ 131°F
2.2.2.4.5	[3.3.6]	RWCU Penetration Room Area Δ Temperature - High	≤ 69°F
2.2.2.4.6	3.3.6.1	RWCU Pump Area Temperature - High	≤ 147°F
2.2.2.4.7	[3.3.6]	RWCU Pump Room Area Δ Temperature - High	≤ 69°F
2.2.2.4.8	3.3.6.1	RWCU Heat Exchanger Area Temperature - High	≤ 147°F
2.2.2.4.9	[3.3.6]	RWCU Heat Exchanger Room Area Δ Temperature – High	≤ 69°F

(continued)

[a] See Figure 2.2-1

TABLE 2.2-1 (Page 4 of 8)
INSTRUMENTATION SETPOINTS

	SYSTEM/REFERENCE LCO [TRO]	TRIP FUNCTION	TRIP SETPOINT
2.2.2.5	Reactor Core Isolation Cooling System Isolation		
2.2.2.5.1	3.3.6.1	RCIC Steam Line Δ Pressure - High	≤ 188 inches H_2O
2.2.2.5.2	3.3.6.1	RCIC Steam Supply Line Pressure - Low	≥ 60 psig
2.2.2.5.3	3.3.6.1	RCIC Turbine Exhaust Diaphragm Pressure - High	≤ 10.0 psig
2.2.2.5.4	3.3.6.1	RCIC Equipment Room Temperature - High	≤ 167°F
2.2.2.5.5	3.3.6.1	RCIC Pipe Routing Area Temperature - High	≤ 167°F
2.2.2.5.6	3.3.6.1	RCIC Emergency Area Cooler Temperature - High	≤ 167°F
2.2.2.5.7	3.3.6.1	Drywell Pressure - High	≤ 1.72 psig
2.2.2.5.8	[3.3.6]	RCIC Equipment Room Δ Temperature - High	≤ 89°F
2.2.2.5.9	[3.3.6]	RCIC Pipe Routing Area Δ Temperature - High	≤ 89°F
2.2.2.6	High Pressure Coolant Injection System Isolation		
2.2.2.6.1	3.3.6.1	HPCI Steam Line Δ Pressure - High	≤ 370 inches H_2O
2.2.2.6.2	3.3.6.1	HPCI Steam Supply Line Pressure - Low	≥ 104 psig
2.2.2.6.3	3.3.6.1	HPCI Turbine Exhaust Diaphragm Pressure - High	≤ 10 psig
2.2.2.6.4	3.3.6.1	HPCI Equipment Room Temperature - High	≤ 167°F
2.2.2.6.5	3.3.6.1	HPCI Emergency Area Cooler Temperature - High	≤ 167°F
2.2.2.6.6	3.3.6.1	HPCI Pipe Routing Area Temperature - High	≤ 167°F
2.2.2.6.7	3.3.6.1	Drywell Pressure - High	≤ 1.72 psig
2.2.2.6.8	[3.3.6]	HPCI Equipment Room Δ Temperature - High	≤ 89°F
2.2.2.6.9	[3.3.6]	HPCI Pipe Routing Area Δ Temperature - High	≤ 89°F
2.2.2.7	Shutdown Cooling/System Isolation		
2.2.2.7.1	3.3.6.1	Reactor Vessel Water Level - Low, Level 3	≥ 13.0 inches[a]
2.2.2.7.2	3.3.6.1	Reactor Vessel Steam Dome Pressure - High	≤ 98 psig
2.2.2.7.3	[3.3.6]	RHR Flow - High	≤ 25,000 gpm
2.2.3	ECCS Actuation		
2.2.3.1	Core Spray System		
2.2.3.1.1	3.3.5.1	Reactor Vessel Water Level - Low Low Low, Level 1	≥ -129 inches[a]
2.2.3.1.2	3.3.5.1	Drywell Pressure - High	≤ 1.72 psig
2.2.3.1.3	3.3.5.1	Reactor Vessel Steam Dome Pressure - Low injection permissive	≥ 413, ≤ 427 psig

(continued)

[a] See Figure 2.2-1

TABLE 2.2-1 (Page 5 of 8)
INSTRUMENTATION SETPOINTS

	SYSTEM/REFERENCE LCO [TRO]	TRIP FUNCTION	TRIP SETPOINT
2.2.3.2	LPCI Mode of RHR System		
2.2.3.2.1	3.3.5.1	Reactor Vessel Water Level - Low Low Low, Level 1	≥ -129 inches[a]
2.2.3.2.2	3.3.5.1	Drywell Pressure - High	≤ 1.72 psig
2.2.3.2.3	3.3.5.1	Reactor Vessel Steam Dome Pressure - Low, injection permissive	≥ 413, ≤ 427 psig
2.2.3.2.4	3.3.5.1	Reactor Vessel Steam Dome Pressure - Low, Recirculation Discharge Valve permissive	≥ 236 psig, decreasing
2.2.3.3	HPCI System		
2.2.3.3.1	3.3.5.1	Reactor Vessel Water Level - Low Low, Level 2	≥ -38 inches[a]
2.2.3.3.2	3.3.5.1	Drywell Pressure - High	≤ 1.72 psig
2.2.3.3.3	3.3.5.1	Condensate Storage Tank Level - Low	≥ 36.0 inches above tank bottom
2.2.3.3.4	3.3.5.1	Reactor Vessel Water Level - High, Level 8	≤ 54 inches
2.2.3.4	Automatic Depressurization System (ADS)		
2.2.3.4.1	3.3.5.1	Reactor Vessel Water Level - Low Low Low, Level 1	≥ -129 inches
2.2.3.4.2	3.3.5.1	Drywell Pressure - High	≤ 1.72 psig
2.2.3.4.3	3.3.5.1	ADS Timer	≤ 102 seconds
2.2.3.4.4	3.3.5.1	Core Spray Pump Discharge Pressure - High	≥ 135, ≤ 155 psig
2.2.3.4.5	3.3.5.1	Low Pressure Coolant Injection Pump Discharge Pressure - High	≥ 121, ≤ 129 psig
2.2.3.4.6	3.3.5.1	Reactor Vessel Water Level - Low, Level 3 Confirmatory	≥ 13 inches
2.2.3.4.7	3.3.5.1	ADS Drywell Pressure Bypass Timer	≤ 420 seconds
2.2.3.5	Loss of Power - ECCS Actuation		
2.2.3.5.1	4.16kv ESS Bus Undervoltage (Loss of Voltage < 20%)		
2.2.3.5.1.1	3.3.8.1	Bus Undervoltage	≥ 823.2, ≤ 856.8 Volts
2.2.3.5.1.2	3.3.8.1	Time delay	≥ 0.4, ≤ 0.6 seconds

(continued)

[a] See Figure 2.2-1

TABLE 2.2-1 (Page 6 of 8)
INSTRUMENTATION SETPOINTS

	SYSTEM/REFERENCE LCO [TRO]	TRIP FUNCTION	TRIP SETPOINT
2.2.3.5.2	4.16kV ESS Bus Undervoltage (Degraded Voltage < 65%)		
2.2.3.5.2.1	3.3.8.1	Bus Undervoltage	≥ 2641.1, ≤ 2748.9 Volts
2.2.3.5.2.2	3.3.8.1	Time delay	≥ 2.7, ≤ 3.3 seconds
2.2.3.5.3	4.16kV ESS Bus Undervoltage (Degraded Voltage, < 93%)		
2.2.3.5.3.1	3.3.8.1	Bus Undervoltage	≥ 3829.3, ≤ 3906.7 Volts
2.2.3.5.3.2	3.3.8.1	Time Delay (Non-LOCA)	≥ 4 minute, 30 seconds ≤ 5 minute, 30 seconds
2.2.3.5.3.4	3.3.8.1	Time Delay (LOCA)	≥ 9, ≤ 11 seconds
2.2.3.5.4	480V ESS Bus 0B565 Undervoltage (Degraded Voltage, < 65%)		
2.2.3.5.4.1	[3.8.5]	480V Basis	≥ 308.9, ≤ 315.1 Volts
2.2.3.5.4.2	[3.8.5]	Time Delay	≥ 4.5, ≤ 5.5 seconds
2.2.3.5.5	480V ESS Bus 0B565 Undervoltage (Degraded Voltage, < 92%)		
2.2.3.5.5.1	[3.8.5]	480V Basis	≥ 437.6, ≤ 446.4 Volts
2.2.3.5.5.2	[3.8.5]	Time Delay	≥ 9, ≤ 11 seconds
2.2.4	ATWS Alternate Rod Injection and Recirculation Pump Trip		
2.2.4.1	3.3.4.2/[3.1.1]	Reactor Vessel, Water Level - Low Low, Level 2	≥ -38 inches[a]
2.2.4.1	3.3.4.2/[3.1.1]	Reactor Vessel Steam Dome Pressure – High	≤ 1135 psig
2.2.5	End of Cycle Recirculation Pump Trip		
2.2.5.1	3.3.4.1	Turbine Stop Valve-Closure	≤ 5.5% closed
2.2.5.2	3.3.4.1	Turbine Control Valve - Fast Closure	≥ 500 psig
2.2.6	Reactor Core Isolation Cooling System Actuation		
2.2.6.1	3.3.5.2	Reactor Vessel Water Level - Low Low, Level 2	≥ -38 inches[a]
2.2.6.2	3.3.5.2	Reactor Vessel Water Level - High, Level 8	≤ 54 inches[a]
2.2.6.3	3.3.5.2	Condensate Storage Tank Level – Low	≥ 36.0 inches above tank bottom

(continued)

[a] See Figure 2.2-1

TABLE 2.2-1 (Page 7 of 8)
INSTRUMENTATION SETPOINTS

	SYSTEM/REFERENCE LCO [TRO]	TRIP FUNCTION	TRIP SETPOINT
2.2.7	Control Rod Block		
2.2.7.1	Rod Block Monitor		
2.2.7.1.1	3.3.2	Low Power Range Upscale - Two Loop Operation	≤ 0.58W + 52%
2.2.7.1.2	3.3.2	Low Power Range Upscale - Single Loop Operation	≤ 0.58W + 47%
2.2.7.1.3		Downscale	5%
2.2.7.2	APRM		
2.2.7.2.1	[3.1.3]	Flow Biased Simulated Thermal Power-High - Two Loop Operation	See COLR - TRO 3.2
2.2.7.2.2	[3.1.3]	Flow Biased Simulated Thermal Power High - Single Loop Operation	See COLR - TRO 3.2
2.2.7.2.3	[3.1.3]	Flow Biased Simulated Thermal Power High - High Flow Clamped	≤ 108% of RATED THERMAL POWER
2.2.7.2.4	[3.1.3]	Downscale	≥ 5% of RATED THERMAL POWER
2.2.7.2.5	[3.1.3]	Neutron Flux - High Setdown	≤ 12% of RATED THERMAL POWER
2.2.7.3	Source Range Monitors		
2.2.7.3.1	[3.1.3]	Upscale	≤ 2E5 cps
2.2.7.3.2	[3.1.3]	Downscale	≥ 3.0 cps[b]
2.2.7.4	Intermediate Range Monitors		
2.2.7.4.1	[3.1.3]	Upscale	≤ 108/125 divisions of full scale
2.2.7.4.2	[3.1.3]	Downscale	≥ 5/125 divisions of full scale
2.2.7.5	Scram Discharge Volume		
2.2.7.5.1	[3.1.3]	Water Level – High	≤ 35.9 gallons
2.2.7.6	Reactor Coolant System Recirculation Flow		
2.2.7.6.1	[3.1.3]	Upscale	114%
2.2.7.6.2	[3.1.3]	Comparator	≤ 10% flow deviation

(continued)

[b] With a signal-to-noise ratio ≥ 2, or within the limits of Figure 2.2-2.

TABLE 2.2-1 (Page 8 of 8)
INSTRUMENTATION SETPOINTS

	SYSTEM/REFERENCE LCO [TRO]	TRIP FUNCTION	TRIP SETPOINT
2.2.8	CREOASS		
2.2.8.1	3.3.7.1	Main Control Room Outside Air Intake Radiation Monitor	≤ 5 mR/hr
2.2.8.1.1	3.3.7.1	Reactor Vessel Water Level - Low Low, Level 2	≥ -38.0 inches[a]
2.2.8.1.2	3.3.7.1	Drywell Pressure – High	≤ 1.72 psig
2.2.8.1.3	3.3.7.1	Refuel Floor High Exhaust Duct Radiation - High	≤ 18 mR/hr
2.2.8.1.4	3.3.7.1	Railroad Access Shaft Exhaust Duct Radiation – High	≤ 5 mR/hr
2.2.8.1.5	3.3.7.1	Refuel Floor Wall Exhaust Duct Radiation - High	≤ 21 mR/hr
2.2.9	Feedwater/Main Turbine Trip System Actuation		
2.2.9.1	3.3.2.2	Reactor Vessel Level – High	≤ 54.0 inches[a]
2.2.10	MVP Isolation		
2.2.10.1	[3.3.11]	Main Steam Line Radiation – High High	≤ 15 x full power background without hydrogen injection

[a] See Figure 2.2-1

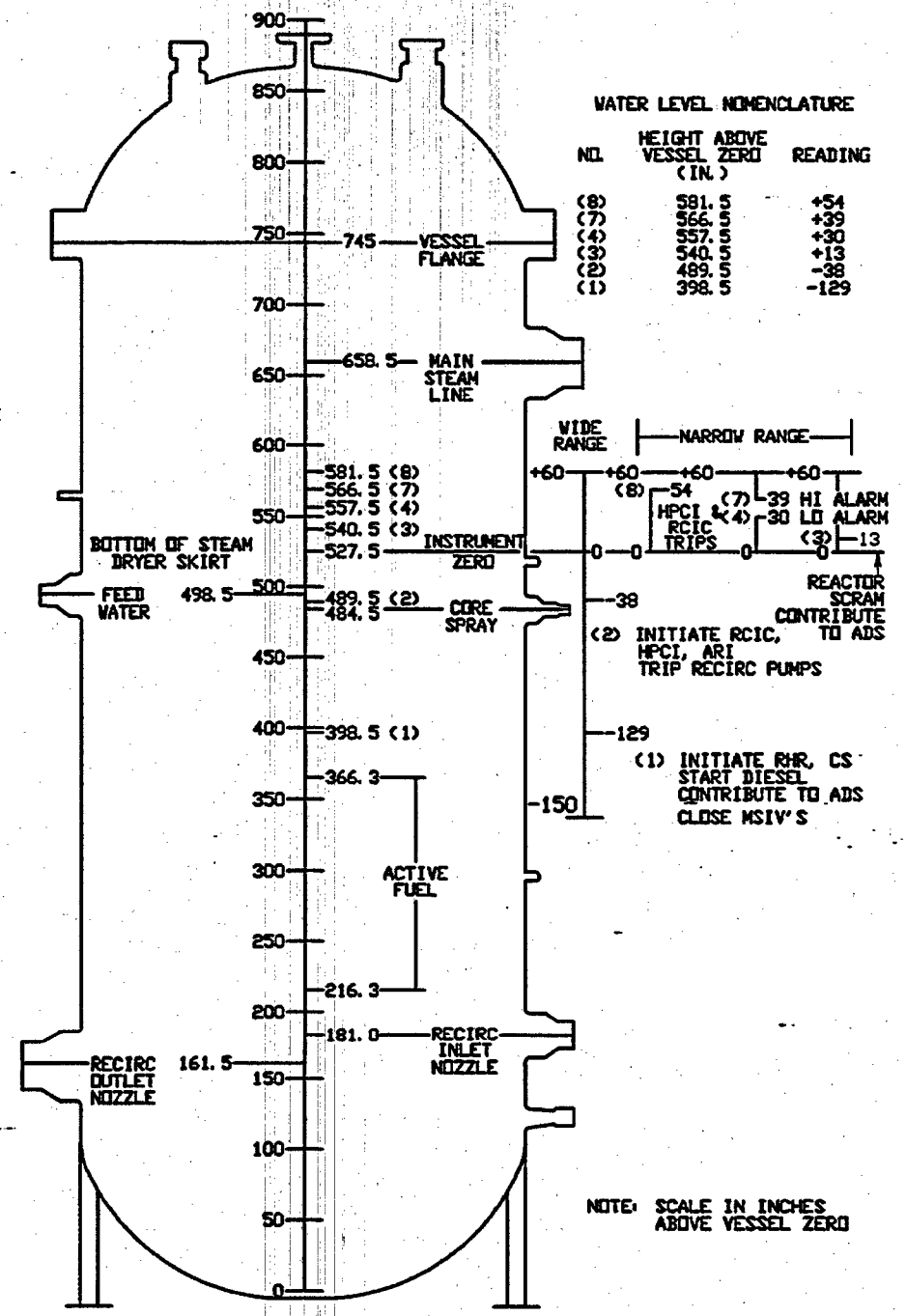

FIGURE 2.2-1
REACTOR VESSEL WATER LEVEL

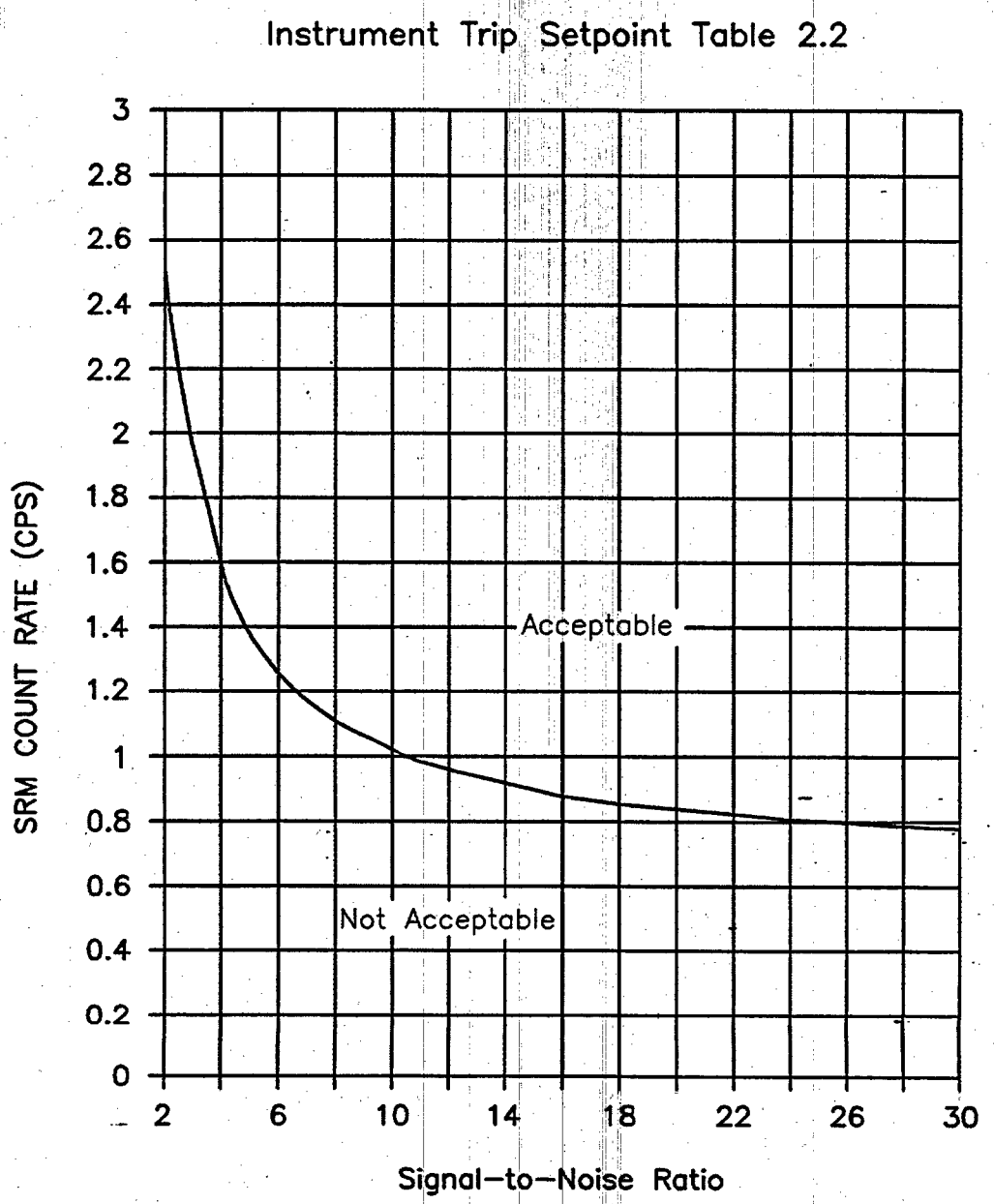

Figure 2.2–2
Minimum SRM Trip Setpoint Versus Signal–to–Noise Ratio

3.1 Reactivity Control Systems

3.1.3 Control Rod Block Instrumentation

TRO 3.1.3 The control rod block instrumentation for each function in Table 3.1.3-1 shall be OPERABLE.

APPLICABILITY: According to Table 3.1.3-1

ACTIONS

NOTE
Separate condition entry is allowed for each channel

CONDITION	REQUIRED ACTION	COMPLETION TIME
A. One or more required channels inoperable.	A.1 Enter the Condition referenced in Table 3.1.3-1for the channel.	Immediately
B. As required by Required Action A.1 and referenced in Table 3.1.3-1.	B.1 Place at least one inoperable channel in the tripped condition. AND B.2 Place the inoperable channel in the tripped condition.	1 hour from discovery of loss of trip capability 7 days
C. As required by Required Action A.1 and referenced in Table 3.1.3-1.	C.1 Place the inoperable channel in the tripped condition.	12 hours
D. Required Actions and Completion Time of Conditions B or C not met.	D.1 Suspend Control Rod withdrawal.	Immediately

TECHNICAL REQUIREMENT SURVEILLANCE

NOTES

1. Refer to Table 3.1.3-1 to determine which TRSs apply for each Control Rod Block Function.

2. Neutron detectors may be excluded from CHANNEL CALIBRATION.

3. When a channel is placed in an inoperable status solely for performance of required Surveillances, entry into associated Conditions and Required Actions may be delayed for up to 6 hours provided at least one other OPERABLE channel in the same trip system is monitoring that parameter.

SURVEILLANCE		FREQUENCY
TRS 3.1.3.1	Perform CHANNEL CHECK	12 hours
TRS 3.1.3.2	NOTE Only required to be performed when MLFPD is greater then FRTP. (ITS LCO 3.2.4 "APRM gain and setpoints" Required Action A.1) Verify APRM Setpoints or gains are adjusted for the calculated MFLPD.	12 hours
TRS 3.1.3.3	Perform CHANNEL FUNCTIONAL TEST	7 days
TRS 3.1.3.4	Perform CHANNEL FUNCTIONAL TEST	92 days
TRS 3.1.3.5	Perform CHANNEL CALIBRATION	184 days
TRS 3.1.3.6	Perform CHANNEL CALIBRATION	24 months
TRS 3.1.3.7	Perform LOGIC SYSTEM FUNCTIONAL TEST	24 months

TABLE 3.1.3-1 (Page 1 of 2)
CONTROL ROD BLOCK INSTRUMENTATION

FUNCTION	APPLICABLE MODES OR OTHER SPECIFIED CONDITIONS	REQUIRED CHANNELS PER TRIP FUNCTION	CONDITIONS REFERENCED FROM REQUIRED ACTION A.1	SURVEILLANCE REQUIREMENTS	ALLOWABLE VALUE
1. APRM					
a. Neutron Flux - High Setdown	2, 5[a]	4	B	TRS 3.1.3.1 TRS 3.1.3.4 TRS 3.1.3.5	≤ 14% RTP
b. Flow Biased Simulated Thermal Power - High	1	4	B	TRS 3.1.3.1 TRS 3.1.3.2 TRS 3.1.3.4 TRS 3.1.3.5	See COLR TRO 3.2[b]
c. Fixed Neutron Flux - High	1	4	B	TRS 3.1.3.1 TRS 3.1.3.4 TRS 3.1.3.5	≤ 111% RTP
d. Downscale	1	4	B	TRS 3.1.3.1 TRS 3.1.3.4 TRS 3.1.3.5	≥ 3% RTP
e. Inop	1, 2	4	B	TRS 3.1.3.4	NA
	5[a]	4	B	TRS 3.1.3.4	NA
2. Source Range Monitors					
a. Detector not full in	2[c]	3	B	TRS 3.1.3.3 TRS 3.1.3.7	NA
	5[i]	2	B	TRS 3.1.3.3 TRS 3.1.3.7	NA
b. Upscale	2[d]	3	B	TRS 3.1.3.3 TRS 3.1.3.6 TRS 3.1.3.7	≤ 3.3E5 cps
	5[i]	2	B	TRS 3.1.3.3 TRS 3.1.3.6 TRS 3.1.3.7	≤ 3.3E5 cps
c. Inop	2[d]	3	B	TRS 3.1.3.3 TRS 3.1.3.7	NA
	5[i]	2	B	TRS 3.1.3.3 TRS 3.1.3.7	NA

(continued)

(a) When performing Shutdown Margin Demonstration per Technical Specification 3.10.8.
(b) See COLR for single loop operation per Technical Specification 3.4.1, Recirculation Loops Operating
(c) When not automatically bypassed with SRM counts ≥ 100 cps or the IRM channels on range 3 or higher.
(d) When not automatically bypassed with IRM channels on range 8 or higher.
(i) With any control rod withdrawn from a core cell containing one or more fuel assemblies.

TABLE 3.1.3-1 (Page 2 of 2)
CONTROL ROD BLOCK INSTRUMENTATION

FUNCTION	APPLICABLE MODES OR OTHER SPECIFIED CONDITIONS	REQUIRED CHANNELS PER TRIP FUNCTION	CONDITIONS REFERENCED FROM REQUIRED ACTION A.1	SURVEILLANCE REQUIREMENTS	ALLOWABLE VALUE
d. Downscale	2[e]	3	B	TRS 3.1.3.3 TRS 3.1.3.6 TRS 3.1.3.7	≥ 1.8 cps[f]
	5[i] [j]	2	B	TRS 3.1.3.3 TRS 3.1.3.6 TRS 3.1.3.7	≥ 1.8 cps[f]
3. Intermediate Range Monitors					
a. Detector not full in	2, 5[j]	6	B	TRS 3.1.3.3 TRS 3.1.3.7	NA
b. Neutron Flux - High	2, 5[j]	6	B	TRS 3.1.3.1 TRS 3.1.3.3 TRS 3.1.3.5 TRS 3.1.3.7	≤ 110/125 divisions of full scale
c. Inop	2, 5[j]	6	B	TRS 3.1.3.3 TRS 3.1.3.7	NA
d. Downscale	2[g] 5[j]	6	B	TRS 3.1.3.1 TRS 3.1.3.3 TRS 3.1.3.5 TRS 3.1.3.7	3/125 divisions of full scale
4. Scram Discharge Volume Water Level - High	1, 2, 5[h]	2	C	TRS 3.1.3.4 TRS 3.1.3.6	≤ 36.5 gallons
5. Reactor Coolant System Recirculation Flow					
a. Upscale	1	2	C	TRS 3.1.3.4 TRS 3.1.3.5	≤ 117/125 divisions of full scale
b. Inop	1	2	C	TRS 3.1.3.4	NA
c. Comparator	1	2	C	TRS 3.1.3.4 TRS 3.1.3.5	≤ 11% flow deviation

(e) When not automatically bypassed with IRMs on range 3 or higher.
(f) With a signal-to-noise ratio ≥ 2, or within the limits of TS Figure 3.3.1.2-1.
(g) When not automatically bypassed with IRM channels on range 1.
(h) When more than one control rod is withdrawn. Not applicable to control rods removed per Technical Specification 3.10.5 or 3.10.6.
(i) Not required when eight or fewer fuel assemblies (adjacent to the SRMs) are in the core.
(j) With any control rod withdrawn from a core cell containing one or more fuel assemblies.

B 3.1.3 Control Rod Block Instrumentation

BASES

TRO

The Control Rod Block Instrumentation is a portion of the Reactor Manual Control System (RMCS), which upon receipt of input signals from other systems and subsystems, inhibits movement or selection of control rods (Reference 1). The purpose of the Control Rod Block function is to avoid conditions that would require Reactor Protection System (RPS) action if allowed to proceed.

The specific Functions associated with the TRM Control Rod Block Instrumentation are identified in Table 3.1.3-1 and are discussed below.

1. Average Power Range Monitors (APRM)
2. Source Range Monitors (SRM)
3. Intermediate Range Monitors (IRM)

The same grouping of neutron monitoring equipment (APRM, SRM, and IRM) that is used in the RPS is also used in the rod block circuitry. Half of the total monitors (APRM, SRM, and IRM) provide inputs to one of the two RMCS rod block logic circuits and the remaining half provide inputs to the other RMCS rod block circuit.

The APRM rod block settings are varied as a function of Reactor Coolant System (RCS) recirculation flow. The settings are selected so that all the neutron monitoring rod blocks are sufficient to avoid an RPS action. Mechanical switches in the SRM and IRM detector drive systems provide the position signals used to indicate that a detector is not fully inserted.

The SRM minimum count rate Allowable Value is discussed in the TS Bases for SR 3.3.1.2.4.

4. Scram Discharge Volume Water Level - High

Scram Discharge Volume Water Level – High signals are provided as inputs into both rod block logic circuits. Both rod block logic circuits sense when the high water level scram trip for the Scram Discharge Volume is bypassed. The rod block from Scram Discharge Volume Water Level – High comes from one of two float type level switches installed in each of two scram discharge instrument volumes. The second float switch in each instrument volume provides a control room annunciation of increasing level below the level at which a rod block occurs.

(continued)

B 3.1.3 Control Rod Block Instrumentation

BASES

TRO (continued)

5. RCS Recirculation Flow

RCS Recirculation Flow units A and C provide upscale, inoperable, and comparator rod block trip signals to one of the two RMCS rod block logic systems, and RCS Recirculation Flow units B and D provide these same trip signals to the other rod block logic system.

The RCS Recirculation Flow converter upscale or inoperative alarm assures that no control rod is withdrawn unless the recirculation flow converters, which are necessary for the power operation of the Rod Block Monitors, are OPERABLE. The recirculation flow comparator alarm or inoperative Functions assure that no control rod is withdrawn unless the difference between the outputs of the flow converters is within limits and the comparator is in service.

ACTIONS

The ACTIONS are defined to ensure proper corrective measures are taken in response to the inoperable components.

TRS

The TRSs are performed at the specified Frequency to ensure that the Control Rod Block Function is maintained OPERABLE.

TRS 3.1.3.1, TRS 3.1.3.3, TRS 3.1.3.4, TRS 3.1.3.5, TRS 3.1.3.6, and TRS 3.1.3.7

Control Rod Block Instrumentation surveillances are performed consistent with the Bases for the comparable channels in LCO 3.3.1.1 and LCO 3.3.1.2.

TRS 3.1.3.2

TRS 3.1.3.2 is necessary to ensure the APRM Flow Biased Simulated Thermal Power-High Rod Block is properly adjusted for MFLPD. The MFLPD is required to be calculated and compared to Fraction of Rated Thermal Power (FRTP) or APRM gain or setpoints to ensure the reactor is operating within the assumptions of the safety analysis (LCO 3.2.4, "APRM Gain and Setpoints"). This TRS is only required when MFLPD is greater than FRTP. The 12-hour Frequency is required because more rapid changes in power distribution are typically expected.

(continued)

B 3.1.3 Control Rod Block Instrumentation

BASES (continued)

REFERENCE 1. FSAR Section 7.7.1

MANUAL HARD COPY DISTRIBUTION
DOCUMENT TRANSMITTAL 2005-51680

USER INFORMATION:

GERLACH*ROSE M EMPL#:028401 CA#: 0363

Address: NUCSA2

Phone#: 254-3194

TRANSMITTAL INFORMATION:

TO: [redacted] 11/23/2005

LOCATION: [redacted]

FROM: NUCLEAR RECORDS DOCUMENT CONTROL CENTER (NUCSA-2)

THE FOLLOWING CHANGES HAVE OCCURRED TO THE HARDCOPY OR ELECTRONIC MANUAL ASSIGNED TO YOU. HARDCOPY USERS MUST ENSURE THE DOCUMENTS PROVIDED MATCH THE INFORMATION ON THIS TRANSMITTAL. WHEN REPLACING THIS MATERIAL IN YOUR HARDCOPY MANUAL, ENSURE THE UPDATE DOCUMENT ID IS THE SAME DOCUMENT ID YOU'RE REMOVING FROM YOUR MANUAL. TOOLS FROM THE HUMAN PERFORMANCE TOOL BAG SHOULD BE UTILIZED TO ELIMINATE THE CHANCE OF ERRORS.

ATTENTION: "REPLACE" directions do not affect the Table of Contents, Therefore no TOC will be issued with the updated material.

TRM2 - TECHNICAL REQUIREMENTS MANUAL UNIT 2

REMOVE MANUAL TABLE OF CONTENTS DATE: 11/07/2005

ADD MANUAL TABLE OF CONTENTS DATE: 11/22/2005

CATEGORY: DOCUMENTS TYPE: TRM2

ID: TEXT 2.2
REMOVE: REV:4

ADD: REV: 5

CATEGORY: DOCUMENTS TYPE: TRM2
ID: TEXT 3.1.1
REMOVE: REV:0

ADD: REV: 2

REMOVE: REV:2

CATEGORY: DOCUMENTS TYPE: TRM2
ID: TEXT 3.1.3
REMOVE: REV:1

ADD: REV: 2

CATEGORY: DOCUMENTS TYPE: TRM2
ID: TEXT B3.1.1
REMOVE: REV:0

ADD: REV: 2

REMOVE: REV:2

CATEGORY: DOCUMENTS TYPE: TRM2
ID: TEXT B3.1.3
REMOVE: REV:1

ADD: REV: 2

CATEGORY: DOCUMENTS TYPE: TRM2
ID: TEXT LOES
REMOVE: REV:21

ADD: REV: 22

ANY DISCREPANCIES WITH THE MATERIAL PROVIDED, CONTACT DCS @ X3107 OR X3136 FOR ASSISTANCE. UPDATES FOR HARDCOPY MANUALS WILL BE DISTRIBUTED WITHIN 5 DAYS IN ACCORDANCE WITH DEPARTMENT PROCEDURES. PLEASE MAKE ALL CHANGES AND ACKNOWLEDGE COMPLETE IN YOUR NIMS INBOX UPON COMPLETION OF UPDATES. FOR ELECTRONIC MANUAL USERS, ELECTRONICALLY REVIEW THE APPROPRIATE DOCUMENTS AND ACKNOWLEDGE COMPLETE IN YOUR NIMS INBOX.

Manual Name: TRM2

Manual Title: TECHNICAL REQUIREMENTS MANUAL UNIT 2

Table Of Contents

Issue Date: 11/22/2005

Procedure Name	Rev	Issue Date	Change ID	Change Number
TEXT LOES	22	11/22/2005		
Title: LIST OF EFFECTIVE SECTIONS				
TEXT TOC	5	02/04/2005		
Title: TABLE OF CONTENTS				
TEXT 1.1	0	11/19/2002		
Title: USE AND APPLICATION DEFINITIONS				
TEXT 2.1	1	02/04/2005		
Title: PLANT PROGRAMS AND SETPOINTS PLANT PROGRAMS				
TEXT 2.2	5	11/22/2005		
Title: PLANT PROGRAMS AND SETPOINTS INSTRUMENT TRIP SETPOINT TABLE				
TEXT 3.0	0	11/19/2002		
Title: APPLICABILITY TECHNICAL REQUIREMENT FOR OPERATION (TRO) APPLICABILITY				
TEXT 3.1.1	0	11/19/2002		
Title: REACTIVITY CONTROL SYSTEMS ANTICIPATED TRANSIENT WITHOUT SCRAM ALTERNATE ROD INJECTION (ATWS-ARI) INSTRUMENTATION				
TEXT 3.1.2	0	11/19/2002		
Title: REACTIVITY CONTROL SYSTEMS CONTROL ROD DRIVE (CRD) HOUSING SUPPORT				
TEXT 3.1.3	2	11/22/2005		
Title: REACTIVITY CONTROL SYSTEMS CONTROL ROD BLOCK INSTRUMENTATION				
TEXT 3.1.4	0	11/19/2002		
Title: REACTIVITY CONTROL SYSTEMS CONTROL ROD SCRAM ACCUMULATORS INSTRUMENTATION AND CHECK VALVE				
TEXT 3.2.1	4	04/14/2005		
Title: CORE OPERATING LIMITS CORE OPERATING LIMITS REPORT (COLR)				

CONTROLLED

Manual Name: TRM2

Manual Title: TECHNICAL REQUIREMENTS MANUAL UNIT 2

TEXT 3.3.1 0 11/19/2002
Title: INSTRUMENTATION RADIATION MONITORING INSTRUMENTATION

TEXT 3.3.2 0 11/19/2002
Title: INSTRUMENTATION SEISMIC MONITORING INSTRUMENTATION

TEXT 3.3.3 0 11/19/2002
Title: INSTRUMENTATION METEOROLOGICAL MONITORING INSTRUMENTATION

TEXT 3.3.4 1 07/06/2005
Title: INSTRUMENTATION TRM POST-ACCIDENT MONITORING INSTRUMENTATION

TEXT 3.3.5 0 11/19/2002
Title: INSTRUMENTATION THIS PAGE INTENTIONALLY LEFT BLANK

TEXT 3.3.6 2 10/19/2005
Title: INSTRUMENTATION TRM ISOLATION ACTUATION INSTRUMENTATION

TEXT 3.3.7 0 11/19/2002
Title: INSTRUMENTATION MAIN TURBINE OVERSPEED PROTECTION SYSTEM

TEXT 3.3.8 1 10/22/2003
Title: INSTRUMENTATION TRM RPS INSTRUMENTATION

TEXT 3.3.9 1 11/22/2004
Title: INSTRUMENTATION LPRM UPSCALE ALARM INSTRUMENTATION

TEXT 3.3.10 1 12/14/2004
Title: INSTRUMENTATION REACTOR RECIRCULATION PUMP MG SET STOPS

TEXT 3.3.11 1 10/22/2003
Title: INSTRUMENTATION MVP ISOLATION INSTRUMENTATION

TEXT 3.4.1 0 11/19/2002
Title: REACTOR COOLANT SYSTEM REACTOR COOLANT SYSTEM CHEMISTRY

Manual Name: TRM2

Manual Title: TECHNICAL REQUIREMENTS MANUAL UNIT 2

TEXT 3.4.2 0 11/19/2002
Title: REACTOR COOLANT SYSTEM STRUCTURAL INTEGRITY

TEXT 3.4.3 0 11/19/2002
Title: REACTOR COOLANT SYSTEM REACTOR COOLANT SYSTEM (RCS)

TEXT 3.4.4 1 12/14/2004
Title: REACTOR COOLANT SYSTEM REACTOR RECIRCULATION FLOW AND ROD LINE LIMIT

TEXT 3.4.5 0 11/18/2002
Title: REACTOR COOLANT SYSTEM REACTOR VESSEL MATERIALS

TEXT 3.5.1 1 02/04/2005
Title: ECCS AND RCIC ADS MANUAL INHIBIT

TEXT 3.5.2 0 11/19/2002
Title: ECCS AND RCIC ECCS AND RCIC SYSTEM MONITORING INSTRUMENTATION

TEXT 3.5.3 0 11/19/2002
Title: ECCS AND RCIC LONG TERM NITROGEN SUPPLY TO ADS

TEXT 3.6.1 0 11/19/2002
Title: CONTAINMENT VENTING OR PURGING

TEXT 3.6.2 0 11/19/2002
Title: CONTAINMENT SUPPRESSION CHAMBER-TO-DRYWELL VACUUM BREAKER POSITION INDICATION

TEXT 3.6.3 0 11/19/2002
Title: CONTAINMENT SUPPRESSION POOL ALARM INSTRUMENTATION

TEXT 3.6.4 0 11/19/2002
Title: CONTAINMENT PRIMARY CONTAINMENT CLOSED SYSTEM BOUNDARIES

TEXT 3.7.1 0 11/19/2002
Title: PLANT SYSTEMS EMERGENCY SERVICE WATER SYSTEM (ESW) SHUTDOWN

Manual Name: TRM2

Manual Title: TECHNICAL REQUIREMENTS MANUAL UNIT 2

TEXT 3.7.2 0 11/19/2002
Title: PLANT SYSTEMS ULTIMATE HEAT SINK (UHS) AND GROUND WATER LEVEL

TEXT 3.7.3.1 0 11/19/2002
Title: PLANT SYSTEMS FIRE SUPPRESSION WATER SUPPLY SYSTEM

TEXT 3.7.3.2 1 08/24/2005
Title: PLANT SYSTEMS SPRAY AND SPRINKLER SYSTEMS

TEXT 3.7.3.3 2 08/18/2005
Title: PLANT SYSTEMS CO2 SYSTEMS

TEXT 3.7.3.4 0 11/19/2002
Title: PLANT SYSTEMS HALON SYSTEMS

TEXT 3.7.3.5 0 11/19/2002
Title: PLANT SYSTEMS FIRE HOSE STATIONS

TEXT 3.7.3.6 0 11/19/2002
Title: PLANT SYSTEMS YARD FIRE HYDRANTS AND HYDRANT HOSE HOUSES

TEXT 3.7.3.7 0 11/19/2002
Title: PLANT SYSTEMS FIRE RATED ASSEMBLIES

TEXT 3.7.3.8 4 09/08/2005
Title: PLANT SYSTEMS FIRE DETECTION INSTRUMENTATION

TEXT 3.7.4 0 11/19/2002
Title: PLANT SYSTEMS SOLID RADWASTE SYSTEM

TEXT 3.7.5.1 0 11/19/2002
Title: PLANT SYSTEMS MAIN CONDENSER OFFGAS HYDROGEN MONITOR

TEXT 3.7.5.2 0 11/19/2002
Title: PLANT SYSTEMS MAIN CONDENSER OFFGAS EXPLOSIVE GAS MIXTURE

Manual Name: TRM2

Manual Title: TECHNICAL REQUIREMENTS MANUAL UNIT 2

TEXT 3.7.5.3 0 11/19/2002
Title: PLANT SYSTEMS LIQUID HOLDUP TANKS

TEXT 3.7.6 1 03/01/2005
Title: PLANT SYSTEMS ESSW PUMPHOUSE VENTILATION

TEXT 3.7.7 0 11/19/2002
Title: PLANT SYSTEMS MAIN CONDENSER OFFGAS PRETREATMENT LOGARITHMIC RADIATION MONITORING INSTRUMENTATION

TEXT 3.7.8 2 03/01/2005
Title: PLANT SYSTEMS SNUBBERS

TEXT 3.7.9 0 11/19/2002
Title: PLANT SYSTEMS CONTROL STRUCTURE HVAC

TEXT 3.7.10 1 12/14/2004
Title: PLANT SYSTEMS SPENT FUEL STORAGE POOLS (SFSPS)

TEXT 3.8.1 2 02/04/2005
Title: ELECTRICAL POWER PRIMARY CONTAINMENT PENETRATION CONDUCTOR OVERCURRENT PROTECTIVE DEVICES

TEXT 3.8.2.1 1 12/14/2004
Title: ELECTRICAL POWER MOTOR OPERATED VALVES (MOV) THERMAL OVERLOAD PROTECTION - CONTINUOUS

TEXT 3.8.2.2 2 12/14/2004
Title: ELECTRICAL POWER MOTOR OPERATED VALVES (MOV) THERMAL OVERLOAD PROTECTION - AUTOMATIC

TEXT 3.8.3 0 11/19/2002
Title: ELECTRICAL POWER DIESEL GENERATOR (DG) MAINTENANCE ACTIVITIES

TEXT 3.8.4 1 02/04/2005
Title: ELECTRICAL POWER 24 VDC ELECTRICAL SUBSYSTEM

TEXT 3.8.5 0 11/19/2002
Title: ELECTRICAL POWER DEGRADED VOLTAGE PROTECTION

Manual Name: TRM2

Manual Title: TECHNICAL REQUIREMENTS MANUAL UNIT 2

TEXT 3.8.6 0 11/19/2002
Title: ELECTRICAL POWER EMERGENCY SWITCHGEAR ROOM COOLING

TEXT 3.9.1 0 11/19/2002
Title: REFUELING OPERATIONS DECAY TIME

TEXT 3.9.2 0 11/19/2002
Title: REFUELING OPERATIONS COMMUNICATIONS

TEXT 3.9.3 0 11/19/2002
Title: REFUELING OPERATIONS REFUELING PLATFORM

TEXT 3.10.1 0 11/19/2002
Title: MISCELLANEOUS SEALED SOURCE CONTAMINATION

TEXT 3.10.2 0 11/19/2002
Title: MISCELLANEOUS SHUTDOWN MARGIN TEST RPS INSTRUMENTATION

TEXT 3.10.3 0 11/19/2002
Title: MISCELLANEOUS INDEPENDENT SPENT FUEL STORAGE INSTALLATION (ISFSI)

TEXT 3.10.4 0 11/19/2002
Title: MISCELLANEOUS LEADING EDGE FLOW METER (LEFM)

TEXT 3.11.1.1 0 11/19/2002
Title: RADIOACTIVE EFFLUENTS LIQUID EFFLUENTS CONCENTRATION

TEXT 3.11.1.2 0 11/19/2002
Title: RADIOACTIVE EFFLUENTS LIQUID EFFLUENTS DOSE

TEXT 3.11.1.3 0 11/19/2002
Title: RADIOACTIVE EFFLUENTS LIQUID WASTE TREATMENT SYSTEM

TEXT 3.11.1.4 1 12/14/2004
Title: RADIOACTIVE EFFLUENTS LIQUID RADWASTE EFFLUENT MONITORING INSTRUMENTATION

Manual Name: TRM2

Manual Title: TECHNICAL REQUIREMENTS MANUAL UNIT 2

TEXT 3.11.2.1 2 08/24/2005
Title: RADIOACTIVE EFFLUENTS DOSE RATE

TEXT 3.11.2.6 2 12/14/2004
Title: RADIOACTIVE EFFLUENTS RADIOACTIVE GASEOUS EFFLUENT MONITORING INSTRUMENTATION

TEXT 3.11.4.2 1 12/14/2004
Title: RADIOACTIVE EFFLUENTS LAND USE CENSUS

TEXT 3.11.4.3 0 11/19/2002
Title: RADIOACTIVE EFFLUENTS INTERLABORATORY COMPARISON PROGRAM

TEXT 3.12.1 0 11/19/2002
Title: LOADS CONTROL PROGRAM CRANE TRAVEL-SPENT FUEL STORAGE POOL

TEXT 3.12.2 0 11/19/2002
Title: LOADS CONTROL PROGRAM HEAVY LOADS REQUIREMENTS

TEXT 3.12.3 0 11/19/2002
Title: LOADS CONTROL PROGRAM LIGHT LOADS REQUIREMENTS

TEXT B3.0 0 11/19/2002
Title: APPLICABILITY BASES TECHNICAL REQUIREMENT FOR OPERATION (TRO) APPLICABILITY

TEXT B3.1.1 0 11/19/2002
Title: REACTIVITY CONTROL SYSTEM BASES ANTICIPATED TRANSIENT WITHOUT SCRAM ALTERNATE ROD INJECTION (ATWS-ARI) INSTRUMENTATION

TEXT B3.1.2 0 11/19/2002
Title: REACTIVITY CONTROL SYSTEM BASES CONTROL ROD DRIVE (CRD) HOUSING SUPPORT

TEXT B3.1.3 2 11/22/2005
Title: REACTIVITY CONTROL SYSTEM BASES CONTROL ROD BLOCK INSTRUMENTATION

TEXT B3.1.4 0 11/19/2002
Title: REACTIVITY CONTROL SYSTEM BASES CONTROL ROD SCRAM ACCUMULATORS INSTRUMENTATION AND CHECK VALVE

Manual Name: TRM2

Manual Title: TECHNICAL REQUIREMENTS MANUAL UNIT 2

TEXT B3.2.1 0 11/19/2002
Title: CORE OPERATING LIMITS BASES CORE OPERATING LIMITS REPORT (COLR)

TEXT B3.3.1 0 11/19/2002
Title: INSTRUMENTATION BASES RADIATION MONITORING INSTRUMENTATION

TEXT B3.3.2 0 11/19/2002
Title: INSTRUMENTATION BASES SEISMIC MONITORING INSTRUMENTATION

TEXT B3.3.3 1 02/04/2005
Title: INSTRUMENTATION BASES METEOROLOGICAL MONITORING INSTRUMENTATION

TEXT B3.3.4 1 07/06/2005
Title: INSTRUMENTATION BASES TRM POST ACCIDENT MONITORING (PAM) INSTRUMENTATION

TEXT B3.3.5 0 11/19/2002
Title: INSTRUMENTATION BASES THIS PAGE INTENTIONALLY LEFT BLANK

TEXT B3.3.6 3 10/19/2005
Title: INSTRUMENTATION BASES TRM ISOLATION ACTUATION INSTRUMENTATION

TEXT B3.3.7 0 11/19/2002
Title: INSTRUMENTATION BASES MAIN TURBINE OVERSPEED PROTECTION SYSTEM

TEXT B3.3.8 1 10/22/2003
Title: INSTRUMENTATION BASES TRM RPS INSTRUMENTATION

TEXT B3.3.9 1 11/22/2004
Title: INSTRUMENTATION BASES LPRM UPSCALE ALARM INSTRUMENTATION

TEXT B3.3.10 0 11/19/2002
Title: INSTRUMENTATION BASES REACTOR RECIRCULATION PUMP MG SET STOPS

TEXT B3.3.11 1 10/22/2003
Title: INSTRUMENTATION BASES MVP ISOLATION INSTRUMENTATION

Manual Name: TRM2

Manual Title: TECHNICAL REQUIREMENTS MANUAL UNIT 2

TEXT B3.4.1 0 11/19/2002
Title: REACTOR COOLANT SYSTEM BASES REACTOR COOLANT SYSTEM CHEMISTRY

TEXT B3.4.2 0 11/19/2002
Title: REACTOR COOLANT SYSTEM BASES STRUCTURAL INTEGRITY

TEXT B3.4.3 0 11/19/2002
Title: REACTOR COOLANT SYSTEM BASES HIGH/LOW PRESSURE INTERFACE LEAKAGE MONITOR

TEXT B3.4.4 0 11/19/2002
Title: REACTOR COOLANT SYSTEM BASES REACTOR RECIRCULATION FLOW AND ROD LINE LIMIT

TEXT B3.4.5 0 11/19/2002
Title: REACTOR COOLANT SYSTEM BASES REACTOR VESSEL MATERIALS

TEXT B3.5.1 0 11/19/2002
Title: ECCS AND RCIC BASES ADS MANUAL INHIBIT

TEXT B3.5.2 0 11/19/2002
Title: ECCS AND RCIC BASES ECCS AND RCIC SYSTEM MONITORING INSTRUMENTATION

TEXT B3.5.3 0 11/19/2002
Title: ECCS AND RCIC BASES LONG TERM NITROGEN SUPPLY TO ADS

TEXT B3.6.1 0 11/19/2002
Title: CONTAINMENT BASES VENTING OR PURGING

TEXT B3.6.2 0 11/19/2002
Title: CONTAINMENT BASES SUPPRESSION CHAMBER-TO-DRYWELL VACUUM BREAKER POSITION INDICATION

TEXT B3.6.3 0 11/19/2002
Title: CONTAINMENT BASES SUPPRESSION POOL ALARM INSTRUMENTATION

TEXT B3.6.4 1 12/14/2004
Title: CONTAINMENT BASES PRIMARY CONTAINMENT CLOSED SYSTEM BOUNDARIES

Manual Name: TRM2

Manual Title: TECHNICAL REQUIREMENTS MANUAL UNIT 2

TEXT B3.7.1 0 11/19/2002
Title: PLANT SYSTEMS BASES EMERGENCY SERVICE WATER SYSTEM (SHUTDOWN)

TEXT B3.7.2 0 11/19/2002
Title: PLANT SYSTEMS BASES ULTIMATE HEAT SINK (UHS) GROUND WATER LEVEL

TEXT B3.7.3.1 0 11/19/2002
Title: PLANT SYSTEMS BASES FIRE SUPPRESSION WATER SUPPLY SYSTEM

TEXT B3.7.3.2 1 08/24/2005
Title: PLANT SYSTEMS BASES SPRAY AND SPRINKLER SYSTEMS

TEXT B3.7.3.3 0 11/19/2002
Title: PLANT SYSTEMS BASES CO2 SYSTEMS

TEXT B3.7.3.4 0 11/19/2002
Title: PLANT SYSTEMS BASES HALON SYSTEMS

TEXT B3.7.3.5 0 11/19/2002
Title: PLANT SYSTEMS BASES FIRE HOSE STATIONS

TEXT B3.7.3.6 0 11/19/2002
Title: PLANT SYSTEMS BASES YARD FIRE HYDRANTS AND HYDRANT HOSE HOUSES

TEXT B3.7.3.7 0 11/19/2002
Title: PLANT SYSTEMS BASES FIRE RATED ASSEMBLIES

TEXT B3.7.3.8 1 01/12/2004
Title: PLANT SYSTEMS BASES FIRE DETECTION INSTRUMENTATION

TEXT B3.7.4 0 11/19/2002
Title: PLANT SYSTEMS BASES SOLID RADWASTE SYSTEM

TEXT B3.7.5.1 0 11/19/2002
Title: PLANT SYSTEMS BASES MAIN CONDENSER OFFGAS HYDROGEN MONITOR

Manual Name: TRM2

Manual Title: TECHNICAL REQUIREMENTS MANUAL UNIT 2

TEXT B3.7.5.2 0 11/19/2002
Title: PLANT SYSTEMS BASES MAIN CONDENSER OFFGAS EXPLOSIVE GAS MIXTURE

TEXT B3.7.5.3 0 11/19/2002
Title: PLANT SYSTEMS BASES LIQUID HOLDUP TANKS

TEXT B3.7.6 1 03/01/2005
Title: PLANT SYSTEMS BASES ESSW PUMPHOUSE VENTILATION

TEXT B3.7.7 0 11/19/2002
Title: PLANT SYSTEMS BASES MAIN CONDENSER OFFGAS PRETREATMENT LOGARITHMIC RADIATION MONITORING INSTRUMENTATION

TEXT B3.7.8 1 12/14/2004
Title: PLANT SYSTEMS BASES SNUBBERS

TEXT B3.7.9 1 12/14/2004
Title: PLANT SYSTEMS BASES CONTROL STRUCTURE HVAC

TEXT B3.7.10 1 12/14/2004
Title: PLANT SYSTEMS BASES SPENT FUEL STORAGE POOLS

TEXT B3.8.1 1 02/04/2005
Title: ELECTRICAL POWER BASES PRIMARY CONTAINMENT PENETRATION CONDUCTOR OVERCURRENT PROTECTIVE DEVICES

TEXT B3.8.2.1 0 11/19/2002
Title: ELECTRICAL POWER BASES MOTOR OPERATED VALVES (MOV) THERMAL OVERLOAD PROTECTION - CONTINUOUS

TEXT B3.8.2.2 1 09/17/2004
Title: ELECTRICAL POWER BASES MOTOR OPERATED VALVES (MOV) THERMAL OVERLOAD PROTECTION - AUTOMATIC

TEXT B3.8.3 0 11/19/2002
Title: ELECTRICAL POWER BASES DIESEL GENERATOR (DG) MAINTENANCE ACTIVITIES

TEXT B3.8.4 0 11/19/2002
Title: ELECTRICAL POWER BASES 24 VDC ELECTRICAL POWER SUBSYSTEM

Manual Name: TRM2

Manual Title: TECHNICAL REQUIREMENTS MANUAL UNIT 2

TEXT B3.8.5 0 11/19/2002
Title: ELECTRICAL POWER BASES DEGRADED VOLTAGE PROTECTION

TEXT B3.8.6 1 02/04/2005
Title: ELECTRICAL POWER BASES EMERGENCY SWITCHGEAR ROOM COOLING

TEXT B3.9.1 0 11/19/2002
Title: REFUELING OPERATIONS BASES DECAY TIME

TEXT B3.9.2 0 11/19/2002
Title: REFUELING OPERATIONS BASES COMMUNICATIONS

TEXT B3.9.3 0 11/19/2002
Title: REFUELING OPERATIONS BASES REFUELING PLATFORM

TEXT B3.10.1 0 11/19/2002
Title: MISCELLANEOUS BASES SEALED SOURCE CONTAMINATION

TEXT B3.10.2 0 11/19/2002
Title: MISCELLANEOUS BASES SHUTDOWN MARGIN TEST RPS INSTRUMENTATION

TEXT B3.10.3 0 11/19/2002
Title: MISCELLANEOUS BASES INDEPENDENT SPENT FUEL STORAGE INSTALLATION (ISFSI)

TEXT B3.10.4 0 11/19/2002
Title: MISCELLANEOUS BASES LEADING EDGE FLOW METER (LEFM)

TEXT B3.11.1.1 0 11/19/2002
Title: RADIOACTIVE EFFLUENTS BASES LIQUID EFFLUENTS CONCENTRATION

TEXT B3.11.1.2 0 11/19/2002
Title: RADIOACTIVE EFFLUENTS BASES LIQUID EFFLUENTS DOSE

TEXT B3.11.1.3 0 11/19/2002
Title: RADIOACTIVE EFFLUENTS BASES LIQUID WASTE TREATMENT SYSTEM

Manual Name: TRM2

Manual Title: TECHNICAL REQUIREMENTS MANUAL UNIT 2

TEXT B3.11.1.4 0 11/19/2002
Title: RADIOACTIVE EFFLUENTS BASES LIQUID RADWASTE EFFLUENT MONITORING INSTRUMENTATION

TEXT B3.11.1.5 0 11/19/2002
Title: RADIOACTIVE EFFLUENTS BASES RADIOACTIVE LIQUID PROCESS MONITORING INSTRUMENTATION

TEXT B3.11.2.1 1 12/14/2004
Title: RADIOACTIVE EFFLUENTS BASES DOSE RATE

TEXT B3.11.2.2 0 11/19/2002
Title: RADIOACTIVE EFFLUENTS BASES DOSE - NOBLE GASES

TEXT B3.11.2.3 0 11/19/2002
Title: RADIOACTIVE EFFLUENTS BASES DOSE - IODINE, TRITIUM, AND RADIONUCLIDES IN PARTICULATES FORM

TEXT B3.11.2.4 0 11/19/2002
Title: RADIOACTIVE EFFLUENTS BASES GASEOUS RADWASTE TREATMENT SYSTEM

TEXT B3.11.2.5 3 05/20/2005
Title: RADIOACTIVE EFFLUENTS BASES VENTILATION EXHAUST TREATMENT SYSTEM

TEXT B3.11.2.6 1 01/27/2004
Title: RADIOACTIVE EFFLUENTS BASES RADIOACTIVE GASEOUS EFFLUENT MONITORING INSTRUMENTATION

TEXT B3.11.3 0 11/19/2002
Title: RADIOACTIVE EFFLUENTS BASES TOTAL DOSE

TEXT B3.11.4.1 1 12/14/2004
Title: RADIOACTIVE EFFLUENTS BASES MONITORING PROGRAM

TEXT B3.11.4.2 0 11/19/2002
Title: RADIOACTIVE EFFLUENTS BASES LAND USE CENSUS

TEXT B3.11.4.3 0 11/19/2002
Title: RADIOACTIVE EFFLUENTS BASES INTERLABORATORY COMPARISON PROGRAM

Manual Name: TRM2

Manual Title: TECHNICAL REQUIREMENTS MANUAL UNIT 2

TEXT B3.12.1 0 11/19/2002
Title: LOADS CONTROL PROGRAM BASES CRANE TRAVEL-SPENT FUEL STORAGE POOL

TEXT B3.12.2 0 11/19/2002
Title: LOADS CONTROL PROGRAM BASES HEAVY LOADS REQUIREMENTS

TEXT B3.12.3 0 11/19/2002
Title: LOADS CONTROL PROGRAM BASES LIGHT LOADS REQUIREMENTS

TEXT 3.11.1.5 1 12/14/2004
Title: RADIOACTIVE EFFLUENTS RADIOACTIVE LIQUID PROCESS MONITORING INSTRUMENTATION

TEXT 3.11.2.2 0 11/19/2002
Title: RADIOACTIVE EFFLUENTS DOSE - NOBLE GASES

TEXT 3.11.2.3 0 11/19/2002
Title: RADIOACTIVE EFFLUENTS DOSE - IODINE, TRITIUM, AND RADIONUCLIDES IN PARTICULATE FORM

TEXT 3.11.2.4 0 11/19/2002
Title: RADIOACTIVE EFFLUENTS GASEOUS RADWASTE TREATMENT SYSTEM

TEXT 3.11.2.5 1 05/20/2005
Title: RADIOACTIVE EFFLUENTS VENTILATION EXHAUST TREATMENT SYSTEM

TEXT 3.11.3 0 11/19/2002
Title: RADIOACTIVE EFFLUENTS TOTAL DOSE

TEXT 3.11.4.1 1 12/14/2004
Title: RADIOACTIVE EFFLUENTS MONITORING PROGRAM

TEXT 4.1 0 09/27/2003
Title: ADMINISTRATIVE CONTROLS ORGANIZATION

TEXT 4.2 0 09/27/2003
Title: ADMINISTRATIVE CONTROLS REPORTABLE EVENT ACTION

Manual Name: TRM2

Manual Title: TECHNICAL REQUIREMENTS MANUAL UNIT 2

TEXT 4.3 0 09/27/2003
Title: ADMINISTRATIVE CONTROLS SAFETY LIMIT VIOLATION

TEXT 4.4 0 09/27/2003
Title: ADMINISTRATIVE CONTROLS PROCEDURES & PROGRAMS

TEXT 4.5 0 09/27/2003
Title: ADMINISTRATIVE CONTROLS REPORTING REQUIREMENTS

TEXT 4.6 0 09/27/2003
Title: ADMINISTRATIVE CONTROLS RADIATION PROTECTION PROGRAM

TEXT 4.7 0 09/27/2003
Title: ADMINISTRATIVE CONTROLS TRAINING

Section	Title	Effective Date
TOC	TABLE OF CONTENTS	01/28/2005
1.0	USE AND APPLICATION	
	Page TRM / 1.0-1	08/31/1998
	Page TRM / 1.0-2	10/04/2002
	Page TRM / 1.0-3	08/31/1998
2.0	PLANT PROGRAMS	
	Page 2.0-1	08/31/1998
	Pages TRM / 2.0-2 and TRM 2.0-3	01/28/2005
	Page TRM / 2.0-4	06/25/2002
	Page TRM / 2.0-5	04/12/1999
	Pages TRM / 2.0-6 and TRM / 2.0-7	11/15/2004
	Page TRM / 2.0-8	12/03/2004
	Pages TRM / 2.0-9 through TRM / 2.0-11	11/15/2004
	Pages TRM / 2.0-12 through TRM / 2.0-15	11/15/2005
3.0	APPLICABILITY	
	Pages TRM / 3.0-1 and TRM / 3.0-2	04/08/1999
	Page TRM / 3.0-3	03/15/2002
	Page TRM / 3.0-4	04/08/1999
3.1	REACTIVITY CONTROL SYSTEMS	
	Pages 3.1-1 through 3.1-6	08/31/1998
	Pages TRM / 3.1-7 and TRM / 3.1-8	11/15/2005
	Pages TRM / 3.1-9 and TRM / 3.1-9a	02/18/1999
	Page TRM / 3.1-10	02/18/1999
3.2	CORE OPERATING LIMITS REPORT	
	Page 3.2-1	08/31/1998
	Pages TRM / 3.2-2 through TRM / 3.2-39	03/03/2005
3.3	INSTRUMENTATION	
	Pages TRM / 3.3-1 through TRM / 3.3-3	07/16/1999
	Page TRM / 3.3-4	11/28/2000
	Pages 3.3-5 through 3.3-8	08/31/1998
	Pages TRM / 3.3-9 and TRM / 3.3-9a	12/17/1998
	Page TRM / 3.3-10	12/17/1998
	Pages TRM / 3.3-11 and TRM / 3.3-11a	06/02/2005
	Page TRM / 3.3-12	03/30/2001
	Page TRM / 3.3-13	09/13/2005
	Page TRM / 3.3-14	12/14/1998
	Page TRM / 3.3-15	10/22/2003
	Page TRM / 3.3-16	06/27/2001
	Pages TRM / 3.3-17 and TRM / 3.3-18	06/14/2002
	Pages TRM / 3.3-19 and TRM / 3.3-20	10/22/2003

CONTROLLED

Section	Title	Effective Date
	Page TRM / 3.3-21	11/15/2004
	Pages TRM /3.3-21a through TRM / 3.3-21d	11/15/2004
	Pages TRM / 3.3-22	12/03/2004
	Pages TRM / 3.3-23 and TRM / 3.3-24	05/16/2003
	Page TRM / 3.3-25	10/22/2003
3.4	REACTOR COOLANT SYSTEM	
	Pages 3.4-1 through 3.4-5	10/23/1998
	Pages 3.4-6 through 3.4-11	08/31/1998
	Page TRM / 3.4-12	12/03/2004
	Page 3.4-13	08/31/1998
3.5	EMERGENCY CORE COOLING AND RCIC	
	Page TRM / 3.5-1	01/28/2005
	Pages 3.5-2 and 3.5-3	08/31/1998
	Page TRM / 3.5-4	04/17/2000
	Pages 3.5-5 through 3.5-7	08/31/1998
3.6	CONTAINMENT	
	Pages 3.6-1 through 3.6-4	08/31/1998
	Page TRM / 3.6-5	01/07/2002
	Page 3.6-6	08/31/1998
	Pages TRM / 3.6-7 through TRM / 3.6-9	12/31/2002
3.7	PLANT SYSTEMS	
	Pages TRM / 3.7-1 and TRM / 3.7-2	07/29/1999
	Page 3.7-3	08/31/1998
	Pages TRM / 3.7-4 through TRM / 3.7-8	08/02/1999
	Pages TRM / 3.7-9 and TRM /3 .7-10	08/16/2005
	Page TRM / 3.7-11	01/21/2000
	Pages TRM / 3.7-12 and TRM / 3.7-13	08/02/1999
	Page TRM / 3.7-14	08/09/2005
	Pages TRM / 3.7-15 through TRM / 3.7-27	08/02/1999
	Page TRM / 3.7-28	08/09/2005
	Page TRM / 3.7-29	11/16/2001
	Page TRM / 3.7-30	08/25/2005
	Page TRM / 3.7-31	11/16/2001
	Page TRM / 3.7-32	01/09/2004
	Page TRM / 3.7-33	10/05/2002
	Pages TRM / 3.7-34 through TRM / 3.7-36	02/01/1999
	Pages 3.7-37 through 3.7-39	08/31/1998
	Pages TRM / 3.7-40 and TRM / 3.7-40a	02/14/2005
	Pages 3.7-41 and 3.7-42	08/31/1998
	Page TRM / 3.7-43	12/03/2004
	Pages 3.7-44 through 3.7-47	10/13/1998
	Page TRM / 3.7-48	03/08/2003

Section	Title	Effective Date
	Pages TRM / 3.7-49 and TRM / 3.7-50	03/09/2001
	Page TRM / 3.7-51	12/03/2004
	Page TRM / 3.7-52	04/15/2003
	Page TRM / 3.7-53	07/29/1999
3.8	ELECTRICAL POWER	
	Page TRM / 3.8-1	04/02/2002
	Pages TRM / 3.8-2 and TRM / 3.8-3	01/28/2005
	Page TRM / 3.8-4	01/31/2005
	Pages TRM / 3.8-5 and TRM / 3.8-6	04/02/2002
	Pages TRM / 3.8-7 through TRM / 3.8-10	12/03/2004
	Page TRM / 3.8-11	08/10/2004
	Page TRM / 3.8-12	12/03/2004
	Pages 3.8-13 and 3.8-14	08/31/1998
	Page TRM / 3.8-15	01/28/2005
	Pages TRM / 3.8-16 and TRM / 3.8-17	04/02/2002
	Page 3.8-18	02/01/1999
	Page TRM / 3.8-19	04/02/2002
	Page TRM / 3.8-20	02/01/1999
	Pages TRM / 3.8-21 through TRM / 3.8-23	06/06/1999
	Pages 3.8-24 and 3.8-25	08/31/1998
3.9	REFUELING OPERATIONS	
	Pages 3.9-1 through 3.9-3	08/31/1998
3.10	MISCELLANEOUS	
	Pages 3.10-1 through 3.10-4	08/30/1998
	Page TRM / 3.10-5	03/08/2003
	Page TRM / 3.10-6	06/05/2002
	Page TRM / 3.10-7	04/07/2000
	Page TRM / 3.10-8	04/17/2002
3.11	RADIOACTIVE EFFLUENTS	
	Pages 3.11-1 through 3.11-9	08/31/1998
	Page TRM / 3.11-10	12/03/2004
	Pages 3.11-11 and 3.11-12	08/31/1998
	Page 3.11-13	09/01/1998
	Page TRM / 3.11-14	12/03/1004
	Pages 3.11-15 and 3.11-16	09/01/1998
	Pages 3.11-17 and 3.11-18	08/31/1998
	Page TRM / 3.11-19	08/15/2005
	Pages 3.11-20 and 3.11-21	08/31/1998
	Page TRM / 3.11-22	04/02/2002
	Pages TRM / 3.11-23 and TRM / 3.11-24	05/13/2005
	Page 3.11-25	09/01/1998

Section	Title	Effective Date
	Pages TRM / 3.11-26 through TRM / 3.11-28	01/21/2004
	Page TRM / 3.11-29	12/03/2004
	Pages TRM 3.11-30 through TRM / 3.11-32	01/21/2004
	Pages 3.11-33 through 3.11-37	08/31/1998
	Page TRM / 3.11-38	12/03/2004
	Pages 3.11-39 through 3.11-44	08/31/1998
	Page TRM / 3.11-45	12/03/2004
	Pages 3.11-46 and 3.11-47	08/31/1998
3.12	LOADS CONTROL PROGRAM	
	Pages TRM / 3.12-1 through TRM / 3.12-5	02/05/1999
4.0	ADMINISTRATIVE CONTROLS	
	Pages 4.0-1 through 4.0-8	08/31/1998

Section	Title	Effective Date
B 3.0	APPLICABILITY BASES	
	Pages B 3.0-1 through B 3.0-10	08/31/1998
	Pages TRM / B 3.0-11 through TRM / B 3.0-15	03/15/2002
B 3.1	REACTIVITY CONTROL SYSTEMS BASES	
	Pages TRM / B 3.1-1 through TRM / B 3.1-3	07/13/1999
	Page B 3.1-4	08/31/1998
	Pages TRM / B 3.1-5 through TRM / B 3.1-7	11/15/2005
	Page TRM / B 3.1-8	02/18/1999
B 3.2	CORE OPERATING LIMITS BASES	
	Page B 3.2-1	08/31/1998
B 3.3	INSTRUMENTATION BASES	
	Page TRM / B 3.3-1	04/07/2000
	Page B 3.3-2	08/31/1998
	Pages TRM / B 3.3-3 and TRM / B 3.3-3A	01/31/2005
	Pages TRM / B 3.3-4 through TRM / B 3.3-6	06/02/2005
	Pages TRM / B 3.3-7 through TRM / B 3.3-9	03/30/2001
	Page B 3.3-10	08/31/1998
	Pages TRM / B 3.3-11 and TRM / B 3.3-12	09/13/2005
	Page TRM / B 3.3-13	12/03/2004
	Page TRM / B 3.3-14	06/25/2002
	Page TRM / B 3.3-14a	06/14/2002
	Page TRM / B 3.3-14b	06/14/2002
	Page TRM / B 3.3-15	10/22/2003
	Page TRM / B 3.3-16	10/22/2003
	Page TRM / B 3.3-17	10/22/2003
	Pages TRM / B 3.3-18 and TRM / B 3.3-19	11/15/2004
	Pages TRM / B 3.3-19a through TRM / B 3.3.19e	11/15/2004
	Pages TRM / B 3.3-20 and TRM / B 3.3-21	05/16/2003
	Page TRM / B3.3-22	10/22/2003
	Page TRM / B3.3-23	05/16/2003
B 3.4	REACTOR COOLANT SYSTEM BASES	
	Pages B 3.4-1 through B 3.4-4	08/31/1998
	Page TRM / B 3.4-5	10/15/1999
	Page B 3.4-6	08/31/1998
B 3.5	ECCS AND RCIC BASES	
	Pages B 3.5-1 through B 3.5-5	08/31/1998
B 3.6	CONTAINMENT BASES	
	Page TRM / B 3.6-1	07/26/2001
	Page TRM / B 3.6-2	02/01/1999
	Page B 3.6-3	08/31/1998

Section	Title	Effective Date
	Page TRM / B 3.6-4	09/23/1999
	Page TRM / B 3.6-5	01/07/2002
	Page TRM / B 3.6-6	12/03/2004
	Pages TRM / B 3.6-7 through TRM / B 3.6-11	12/31/2002
B 3.7	PLANT SYSTEMS BASES	
	Pages B 3.7-1 and B 3.7-2	08/31/1998
	Pages TRM / B 3.7-3 through TRM / B 3.7-5	08/02/1999
	Page TRM / B 3.7-6	08/16/2005
	Pages TRM / B 3.7-7 and TRM / B 3.7-7a	08/02/1999
	Pages TRM / B 3.7-8 through TRM / B 3.7-10	08/02/1999
	Page TRM / B 3.7-10a	08/02/1999
	Pages TRM / B 3.7-11 through TRM / B 3.7-14	08/02/1999
	Page TRM / B 3.7-14a and TRM / B 3.7-14b	01/09/2004
	Pages TRM / B 3.7-15 and TRM / B 3.7-16	02/01/1999
	Pages B 3.7-17 through B 3.7-20	08/31/1998
	Pages TRM / B 3.7-21 and TRM / B3.7-21a	02/14/2005
	Pages TRM/B 3.7-22 and TRM/B 3.7-23	04/07/2000
	Page B 3.7-24	08/31/1998
	Page TRM / B 3.7-25	12/03/2004
	Pages B 3.7-26 through B 3.7-30	08/31/1998
	Page TRM / B 3.7-31	12/03/2004
	Page TRM / B 3.7-32	03/09/2001
	Page TRM / B 3.7-33	04/15/2003
	Page TRM / B 3.7-34	12/03/2004
	Page TRM / B 3.7-35	07/05/2000
B 3.8	ELECTRICAL POWER BASES	
	Page TRM / B 3.8-1	04/02/2002
	Pages TRM / B 3.8-2 and TRM / B 3.8-2a	01/28/2005
	Page TRM / B 3.8-3	04/02/2002
	Page TRM / B 3.8-3a	04/02/2002
	Page TRM / B 3.8-4	04/02/2002
	Page TRM / B 3.8-4a	08/10/2004
	Page TRM / B 3.8-5	08/31/1998
	Pages TRM / B 3.8-6 through TRM / B 3.8-16	04/02/2002
	Page TRM / B 3.8-17	01/28/2005
B.3.9	REFUELING OPERATIONS BASES	
	Pages B 3.9-1 and B 3.9-2	08/31/1998
	Pages B 3.9-3 through B 3.9-7	10/23/1998
B 3.10	MISCELLANEOUS BASES	
	Pages B 3.10-1 through B 3.10-2	08/31/1998
	Page TRM / B 3.10-3	03/08/2003

Section	Title	Effective Date
	Pages TRM / B 3.10-4 and TRM / B 3.10-5	08/23/1999
	Pages TRM / B 3.10-6 and TRM / 3.10-7	04/17/2002
B 3.11	RADIOACTIVE EFFLUENTS BASES	
	Pages B 3.11-1 through B 3.11-9	08/31/1998
	Pages TRM / B 3.11-10	02/01/1999
	Pages TRM/B 3.11-11 and TRM/B 3.11-11a	04/07/2000
	Pages TRM/B 3.11-12 and TRM/B 3.11-13	02/01/1999
	Page TRM / B 3.11-14	12/03/2004
	Page TRM / B 3.11-15	02/01/1999
	Pages B 3.11-16 through B 3.11-19	08/31/1998
	Page TRM / B 3.11-20	04/02/2002
	Page TRM / B 3.11-20a	04/02/2002
	Pages TRM / B 3.11-21 through TRM / B 3.11-23a	05/13/2005
	Pages TRM / B 3.11-24 and TRM / B 3.11-25	01/21/2004
	Pages B 3.11-26 through B 3.11-28	08/31/1998
	Page TRM / B 3.11-29 and TRM / B 3.11-30	12/03/2004
	Pages B 3.11-31 through B 3.11-35	08/31/1998
	Page TRM / B 3.11-36	02/12/1999
B.3.12	LOADS CONTROL PROGRAM BASES	
	Pages TRM / B 3.12-1 through TRM / B 3.12-3	02/05/1999

TRM2 text LOES.doc
11/8/05

2.0 PLANT PROGRAMS AND SETPOINTS

2.2 Instrument Trip Setpoint Table

The Instrument Trip Setpoint Limits in Table 2.2-1 are the Trip Setpoint value limits that were contained in the Instrumentation Setpoint tables for protection systems and other functions important to safety that were included in the scope of the original Standard Technical Specifications. Actual instrument setpoints are established utilizing the Allowable Values specified in the Technical Specifications and Technical Requirements. Allowable Values are established in the Reference LCOs and TROs identified in this Table. TRO references are enclosed in square brackets.

Instrumentation process setpoints for the listed subsystems and trip functions are set consistent with the Trip Setpoint Limit Column of Table 2.2-1. Actual setpoints are established in accordance with engineering procedures.

Alarm setpoints and other non-protection system trip settings as may be found in the Technical Specifications or in the Technical Requirements are not included in this table.

Reference NDAP-QA-1104 Setpoint Change Control

TABLE 2.2-1 (Page 1 of 8)
INSTRUMENTATION SETPOINTS

	SYSTEM/REFERENCE LCO [TRO]	TRIP FUNCTION	TRIP SETPOINT
2.2.1	Reactor Protection		
2.2.1.1	3.3.1.1	Intermediate Range Monitor, Neutron Flux - High	≤ 120/125 divisions of full scale
2.2.1.2	3.3.1.1	Average Power Range Monitor, Neutron Flux - High Setdown	≤ 15% of RATED THERMAL POWER
2.2.1.3	3.3.1.1	Average Power Range Monitor, Flow Biased Simulated Thermal Power - High Two Loop Operation	See COLR - TRO 3.2
2.2.1.4	3.3.1.1	Average Power Range Monitor, Flow Biased Simulated Thermal Power - High Single Loop Operation	See COLR - TRO 3.2
2.2.1.5	3.3.1.1	Average Power Range Monitor, Flow Biased Simulated Thermal Power - High Flow Clamped	≤ 113.5% of RATED THERMAL POWER
2.2.1.6	3.3.1.1	Average Power Range Monitor, Fixed Neutron Flux - High	≤ 118% of RATED THERMAL POWER
2.2.1.7	3.3.1.1	Reactor Vessel Steam Dome Pressure - High	≤ 1087 psig
2.2.1.8	3.3.1.1	Reactor Vessel Water Level - Low, Level 3	≥ 13.0 inches[a]
2.2.1.9	3.3.1.1	Main Steam Isolation Valve - Closure	≤ 10% closed
2.2.1.10		This Section Not Used	
2.2.1.11	3.3.1.1	Drywell Pressure - High	≤ 1.72 psig
2.2.1.12	3.3.1.1	Scram Discharge Volume Water Level - High - Level Transmitter	≤ 65 gallons
2.2.1.13	3.3.1.1	Scram Discharge Volume Water Level - High - Float Switch	≤ 61 gallons
2.2.1.14	3.3.1.1	Turbine Stop Valve - Closure	≤ 5.5% closed
2.2.1.15	3.3.1.1	Turbine Control Valve Fast Closure, Trip Oil Pressure - Low	≥ 500 psig

(continued)

[a] See Figure 2.2-1

TABLE 2.2-1 (Page 2 of 8)
INSTRUMENTATION SETPOINTS

	SYSTEM/REFERENCE LCO [TRO]	TRIP FUNCTION	TRIP SETPOINT
2.2.1.16 OPRM Instrumentation			
2.2.1.16.1	3.3.1.3	Sp Cell Signal Amplitude	See COLR – TRO 3.2
2.2.1.16.2	3.3.1.3	N2 Confirmation Count Permissive	See COLR – TRO 3.2
2.2.1.16.3	[3.3.9]	TOL Period Confirmation Tolerance	0.10 sec
2.2.1.16.4	[3.3.9]	Ta Averaging Filter	5 sec
2.2.1.16.5	[3.3.9]	Fc Conditioning Filter Cutoff Frequency	1.5 Hz
2.2.1.16.6	[3.3.9]	Tmin Minimum Oscillation Period	1.0 sec
2.2.1.16.7	[3.3.9]	Tmax Maximum Oscillation Period	3.5 sec
2.2.1.16.8	[3.3.9]	Noise Floor Peak Discrimination Threshold	1
2.2.1.16.9	[3.3.9]	Minimum LPRM/Cell Cell Operability Requirement	2
2.2.1.16.10	[3.3.9]	S1 Peak Threshold Setpoint	1.20
2.2.1.16.11	[3.3.9]	S2 Valley Threshold Setpoint	0.85
2.2.1.16.12	[3.3.9]	Smax Max. Amplitude Trip Setpoint	1.50
2.2.1.16.13	[3.3.9]	DR3 Growth Rate Factor Setpoint	1.60
2.2.1.16.14	[3.3.9]	T1 lo S1 to S2 Timer Range	0.5 sec
2.2.1.16.15	[3.3.9]	T1 hi S1 to S2 Timer Range	1.75 sec
2.2.1.16.16	[3.3.9]	T2 lo S2 to (S3 or Smax) Timer Range	0.5 sec
2.2.1.16.17	[3.3.9]	T2 hi S2 to (S3 or Smax) Timer Range	1.75 sec
2.2.2 Isolation Actuation Instrumentation			
2.2.2.1 Primary Containment Isolation			
2.2.2.1.1	3.3.6.1	Reactor Vessel Water Level Low, Level 3	≥ 13.0 inches[a]
2.2.2.1.2	3.3.6.1	Reactor Vessel Water Level Low Low, Level 2	≥ -38.0 inches[a]
2.2.2.1.3	3.3.6.1	Reactor Vessel Water Level Low Low Low, Level 1	≥ -129 inches[a]
2.2.2.1.4	3.3.6.1	Drywell Pressure - High	≤ 1.72 psig
2.2.2.1.5	3.3.6.1/[3.3.6]	SGTS Exhaust Radiation - High	≤ 23.0 mR/hr
2.2.2.1.6	[3.3.6]	Main Steam Line Radiation – High High	≤ 15 x full power background without hydrogen injection

(continued)

[a] See Figure 2.2-1

TABLE 2.2-1 (Page 3 of 8)
INSTRUMENTATION SETPOINTS

	SYSTEM/REFERENCE LCO [TRO]	TRIP FUNCTION	TRIP SETPOINT
2.2.2.2	Secondary Containment Isolation		
2.2.2.2.1	3.3.6.2	Reactor Vessel Water Level - Low Low, Level 2	≥ -38.0 inches[a]
2.2.2.2.2	3.3.6.2	Drywell Pressure - High	≤ 1.72 psig
2.2.2.2.3	3.3.6.2	Refuel Floor High Exhaust Duct Radiation - High	≤ 18 mR/hr
2.2.2.2.4	3.3.6.2	Railroad Access Shaft Exhaust Duct Radiation - High	≤ 5 mR/hr
2.2.2.2.5	3.3.6.2	Refuel Floor Wall Exhaust Duct Radiation - High	≤ 21 mR/hr
2.2.2.3	Main Steam Line Isolation		
2.2.2.3.1	3.3.6.1	Reactor Vessel Water Level - Low Low Low, Level 1	≥ -129 inches[a]
2.2.2.3.2	3.3.6.1	Main Steam Line Pressure - Low	≥ 861 psig
2.2.2.3.3	3.3.6.1	Main Steam Line Flow - High	≤ 113 psid
2.2.2.3.4	3.3.6.1	Condenser Vacuum - Low	≥ 9.0 inches Hg vacuum
2.2.2.3.5	3.3.6.1	Reactor Building Main Steam Line Tunnel Temperature - High	≤ 177°F
2.2.2.3.6		This Section Not Used	
2.2.2.3.7	[3.3.6]	Reactor Building Main Steam Line Tunnel Δ Temperature - High	≤ 99°F
2.2.2.3.8	[3.3.6]	Turbine Building Main Steam Tunnel Temperature - High	≤ 197°F
2.2.2.4	Reactor Water Cleanup System Isolation		
2.2.2.4.1	3.3.6.1	Reactor Vessel Water Level - Low Low, Level 2	≥ -38 inches[a]
2.2.2.4.2	3.3.6.1	RWCU Δ Flow - High	≤ 59 gpm
2.2.2.4.3	3.3.6.1	RWCU Flow - High	≤ 462 gpm
2.2.2.4.4	3.3.6.1	RWCU Penetration Area Temperature - High	≤ 131°F
2.2.2.4.5	[3.3.6]	RWCU Penetration Room Area Δ Temperature - High	≤ 69°F
2.2.2.4.6	3.3.6.1	RWCU Pump Area Temperature - High	≤ 147°F
2.2.2.4.7	[3.3.6]	RWCU Pump Room Area Δ Temperature - High	≤ 69°F
2.2.2.4.8	3.3.6.1	RWCU Heat Exchanger Area Temperature - High	≤ 147°F
2.2.2.4.9	[3.3.6]	RWCU Heat Exchanger Room Area Δ Temperature – High	≤ 69°F

(continued)

[a] See Figure 2.2-1

TABLE 2.2-1 (Page 4 of 8)
INSTRUMENTATION SETPOINTS

	SYSTEM/REFERENCE LCO [TRO]	TRIP FUNCTION	TRIP SETPOINT
2.2.2.5	Reactor Core Isolation Cooling System Isolation		
2.2.2.5.1	3.3.6.1	RCIC Steam Line Δ Pressure - High	≤ 138 inches H_2O
2.2.2.5.2	3.3.6.1	RCIC Steam Supply Line Pressure - Low	≥ 60 psig
2.2.2.5.3	3.3.6.1	RCIC Turbine Exhaust Diaphragm Pressure - High	≤ 10.0 psig
2.2.2.5.4	3.3.6.1	RCIC Equipment Room Temperature - High	≤ 167°F
2.2.2.5.5	3.3.6.1	RCIC Pipe Routing Area Temperature - High	≤ 167°F
2.2.2.5.6	3.3.6.1	RCIC Emergency Area Cooler Temperature - High	≤ 167°F
2.2.2.5.7	3.3.6.1	Drywell Pressure - High	≤ 1.72 psig
2.2.2.5.8	[3.3.6]	RCIC Equipment Room Δ Temperature - High	≤ 89°F
2.2.2.5.9	[3.3.6]	RCIC Pipe Routing Area Δ Temperature - High	≤ 89°F
2.2.2.6	High Pressure Coolant Injection System Isolation		
2.2.2.6.1	3.3.6.1	HPCI Steam Line Δ Pressure - High	≤ 370 inches H_2O
2.2.2.6.2	3.3.6.1	HPCI Steam Supply Line Pressure - Low	≥ 104 psig
2.2.2.6.3	3.3.6.1	HPCI Turbine Exhaust Diaphragm Pressure - High	≤ 10 psig
2.2.2.6.4	3.3.6.1	HPCI Equipment Room Temperature - High	≤ 167°F
2.2.2.6.5	3.3.6.1	HPCI Emergency Area Cooler Temperature - High	≤ 167°F
2.2.2.6.6	3.3.6.1	HPCI Pipe Routing Area Temperature - High	≤ 167°F
2.2.2.6.7	3.3.6.1	Drywell Pressure - High	≤ 1.72 psig
2.2.2.6.8	[3.3.6]	HPCI Equipment Room Δ Temperature - High	≤ 89°F
2.2.2.6.9	[3.3.6]	HPCI Pipe Routing Area Δ Temperature - High	≤ 89°F
2.2.2.7	Shutdown Cooling/System Isolation		
2.2.2.7.1	3.3.6.1	Reactor Vessel Water Level - Low, Level 3	≥ 13.0 inches[a]
2.2.2.7.2	3.3.6.1	Reactor Vessel Steam Dome Pressure - High	≤ 98 psig
2.2.2.7.3	[3.3.6]	RHR Flow - High	≤ 25,000 gpm
2.2.3	ECCS Actuation		
2.2.3.1	Core Spray System		
2.2.3.1.1	3.3.5.1	Reactor Vessel Water Level - Low Low Low, Level 1	≥ -129 inches[a]
2.2.3.1.2	3.3.5.1	Drywell Pressure - High	≤ 1.72 psig
2.2.3.1.3	3.3.5.1	Reactor Vessel Steam Dome Pressure - Low injection permissive	≥ 413, ≤ 427 psig

(continued)

[a] See Figure 2.2-1

TABLE 2.2-1 (Page 5 of 8)
INSTRUMENTATION SETPOINTS

	SYSTEM/REFERENCE LCO [TRO]	TRIP FUNCTION	TRIP SETPOINT
2.2.3.2	LPCI Mode of RHR System		
2.2.3.2.1	3.3.5.1	Reactor Vessel Water Level - Low Low Low, Level 1	≥ -129 inches[a]
2.2.3.2.2	3.3.5.1	Drywell Pressure - High	≤ 1.72 psig
2.2.3.2.3	3.3.5.1	Reactor Vessel Steam Dome Pressure - Low, injection permissive	≥ 413, ≤ 427 psig
2.2.3.2.4	3.3.5.1	Reactor Vessel Steam Dome Pressure - Low, Recirculation Discharge Valve permissive	≥ 236 psig, decreasing
2.2.3.3	HPCI System		
2.2.3.3.1	3.3.5.1	Reactor Vessel Water Level - Low Low, Level 2	≥ -38 inches[a]
2.2.3.3.2	3.3.5.1	Drywell Pressure - High	≤ 1.72 psig
2.2.3.3.3	3.3.5.1	Condensate Storage Tank Level - Low	≥ 36.0 inches above tank bottom
2.2.3.3.4	3.3.5.1	Reactor Vessel Water Level - High, Level 8	≤ 54 inches
2.2.3.4	Automatic Depressurization System (ADS)		
2.2.3.4.1	3.3.5.1	Reactor Vessel Water Level - Low Low Low, Level 1	≥ -129 inches
2.2.3.4.2	3.3.5.1	Drywell Pressure - High	≤ 1.72 psig
2.2.3.4.3	3.3.5.1	ADS Timer	≤ 102 seconds
2.2.3.4.4	3.3.5.1	Core Spray Pump Discharge Pressure - High	≥ 135, ≤ 155 psig
2.2.3.4.5	3.3.5.1	Low Pressure Coolant Injection Pump Discharge Pressure - High	≥ 121, ≤ 129 psig
2.2.3.4.6	3.3.5.1	Reactor Vessel Water Level - Low, Level 3 Confirmatory	≥ 13 inches
2.2.3.4.7	3.3.5.1	ADS Drywell Pressure Bypass Timer	≤ 420 seconds
2.2.3.5	Loss of Power - ECCS Actuation		
2.2.3.5.1	4.16kv ESS Bus Undervoltage (Loss of Voltage < 20%)		
2.2.3.5.1.1	3.3.8.1	Bus Undervoltage	≥ 823.2, ≤ 856.8 Volts
2.2.3.5.1.2	3.3.8.1	Time delay	≥ 0.4, ≤ 0.6 seconds

(continued)

[a] See Figure 2.2-1

TABLE 2.2-1 (Page 6 of 8)
INSTRUMENTATION SETPOINTS

	SYSTEM/REFERENCE LCO [TRO]	TRIP FUNCTION	TRIP SETPOINT
2.2.3.5.2	4.16kV ESS Bus Undervoltage (Degraded Voltage < 65%)		
2.2.3.5.2.1	3.3.8.1	Bus Undervoltage	≥ 2641.1, ≤ 2748.9 Volts
2.2.3.5.2.2	3.3.8.1	Time delay	≥ 2.7, ≤ 3.3 seconds
2.2.3.5.3	4.16kV ESS Bus Undervoltage (Degraded Voltage, < 93%)		
2.2.3.5.3.1	3.3.8.1	Bus Undervoltage	≥ 3829.3, ≤ 3906.7 Volts
2.2.3.5.3.2	3.3.8.1	Time Delay (Non-LOCA)	≥ 4 minute, 30 seconds ≤ 5 minute, 30 seconds
2.2.3.5.3.4	3.3.8.1	Time Delay (LOCA)	≥ 9, ≤ 11 seconds
2.2.3.5.4	480V ESS Bus 0B565 Undervoltage (Degraded Voltage, < 65%)		
2.2.3.5.4.1	[3.8.5]	480V Basis	≥ 308.9, ≤ 315.1 Volts
2.2.3.5.4.2	[3.8.5]	Time Delay	≥ 4.5, ≤ 5.5 seconds
2.2.3.5.5	480V ESS Bus 0B565 Undervoltage (Degraded Voltage, < 92%)		
2.2.3.5.5.1	[3.8.5]	480V Basis	≥ 437.6, ≤ 446.4 Volts
2.2.3.5.5.2	[3.8.5]	Time Delay	≥ 9, ≤ 11 seconds
2.2.4	ATWS Alternate Rod Injection and Recirculation Pump Trip		
2.2.4.1	3.3.4.2/[3.1.1]	Reactor Vessel, Water Level - Low Low, Level 2	≥ -38 inches[a]
2.2.4.1	3.3.4.2/[3.1.1]	Reactor Vessel Steam Dome Pressure – High	≤ 1135 psig
2.2.5	End of Cycle Recirculation Pump Trip		
2.2.5.1	3.3.4.1	Turbine Stop Valve-Closure	≤ 5.5% closed
2.2.5.2	3.3.4.1	Turbine Control Valve - Fast Closure	≥ 500 psig
2.2.6	Reactor Core Isolation Cooling System Actuation		
2.2.6.1	3.3.5.2	Reactor Vessel Water Level - Low Low, Level 2	≥ -38 inches[a]
2.2.6.2	3.3.5.2	Reactor Vessel Water Level - High, Level 8	≤ 54 inches[a]
2.2.6.3	3.3.5.2	Condensate Storage Tank Level – Low	≥ 36.0 inches above tank bottom

(continued)

[a] See Figure 2.2-1

TABLE 2.2-1 (Page 7 of 8)
INSTRUMENTATION SETPOINTS

	SYSTEM/REFERENCE LCO [TRO]	TRIP FUNCTION	TRIP SETPOINT
2.2.7	Control Rod Block		
2.2.7.1	Rod Block Monitor		
2.2.7.1.1	3.3.2	Low Power Range Upscale - Two Loop Operation	≤ 0.58W + 52%
2.2.7.1.2	3.3.2	Low Power Range Upscale - Single Loop Operation	≤ 0.58W + 47%
2.2.7.1.3		Downscale	5%
2.2.7.2	APRM		
2.2.7.2.1	[3.1.3]	Flow Biased Simulated Thermal Power-High - Two Loop Operation	See COLR - TRO 3.2
2.2.7.2.2	[3.1.3]	Flow Biased Simulated Thermal Power High - Single Loop Operation	See COLR - TRO 3.2
2.2.7.2.3	[3.1.3]	Flow Biased Simulated Thermal Power High - High Flow Clamped	≤ 108% of RATED THERMAL POWER
2.2.7.2.4	[3.1.3]	Downscale	≥ 5% of RATED THERMAL POWER
2.2.7.2.5	[3.1.3]	Neutron Flux - High Setdown	≤ 12% of RATED THERMAL POWER
2.2.7.3	Source Range Monitors		
2.2.7.3.1	[3.1.3]	Upscale	≤ 2E5 cps
2.2.7.3.2	[3.1.3]	Downscale	≥ 3.0 cps[b]
2.2.7.4	Intermediate Range Monitors		
2.2.7.4.1	[3.1.3]	Upscale	≤ 108/125 divisions of full scale
2.2.7.4.2	[3.1.3]	Downscale	≥ 5/125 divisions of full scale
2.2.7.5	Scram Discharge Volume		
2.2.7.5.1	[3.1.3]	Water Level – High	≤ 35.9 gallons
2.2.7.6	Reactor Coolant System Recirculation Flow		
2.2.7.6.1	[3.1.3]	Upscale	114%
2.2.7.6.2	[3.1.3]	Comparator	≤ 10% flow deviation

(continued)

[b] With a signal-to-noise ratio ≥ 2, or within the limits of Figure 2.2-2.

TABLE 2.2-1 (Page 8 of 8)
INSTRUMENTATION SETPOINTS

	SYSTEM/REFERENCE LCO [TRO]	TRIP FUNCTION	TRIP SETPOINT
2.2.8	CREOASS		
2.2.8.1	3.3.7.1	Main Control Room Outside Air Intake Radiation Monitor	≤ 5 mR/hr
2.2.8.1.1	3.3.7.1	Reactor Vessel Water Level - Low Low, Level 2	≥ -38.0 inches[a]
2.2.8.1.2	3.3.7.1	Drywell Pressure – High	≤ 1.72 psig
2.2.8.1.3	3.3.7.1	Refuel Floor High Exhaust Duct Radiation - High	≤ 18 mR/hr
2.2.8.1.4	3.3.7.1	Railroad Access Shaft Exhaust Duct Radiation – High	≤ 5 mR/hr
2.2.8.1.5	3.3.7.1	Refuel Floor Wall Exhaust Duct Radiation - High	≤ 21 mR/hr
2.2.9	Feedwater/Main Turbine Trip System Actuation		
2.2.9.1	3.3.2.2	Reactor Vessel Level – High	≤ 54.0 inches[a]
2.2.10	MVP Isolation		
2.2.10.1	[3.3.11]	Main Steam Line Radiation – High High	≤ 15 x full power background without hydrogen injection

[a] See Figure 2.2-1

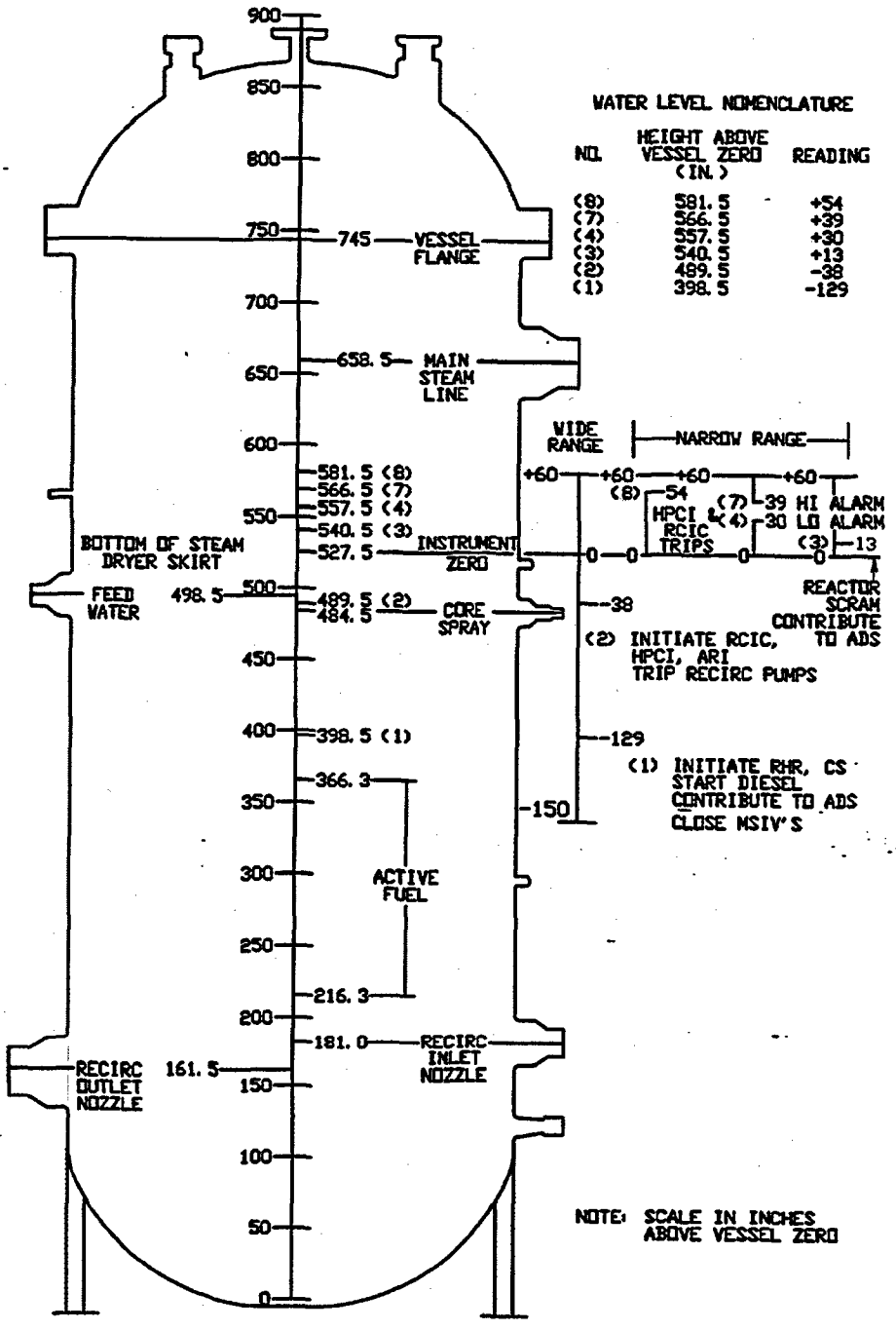

FIGURE 2.2-1
REACTOR VESSEL WATER LEVEL

Instrument Trip Setpoint Table 2.2

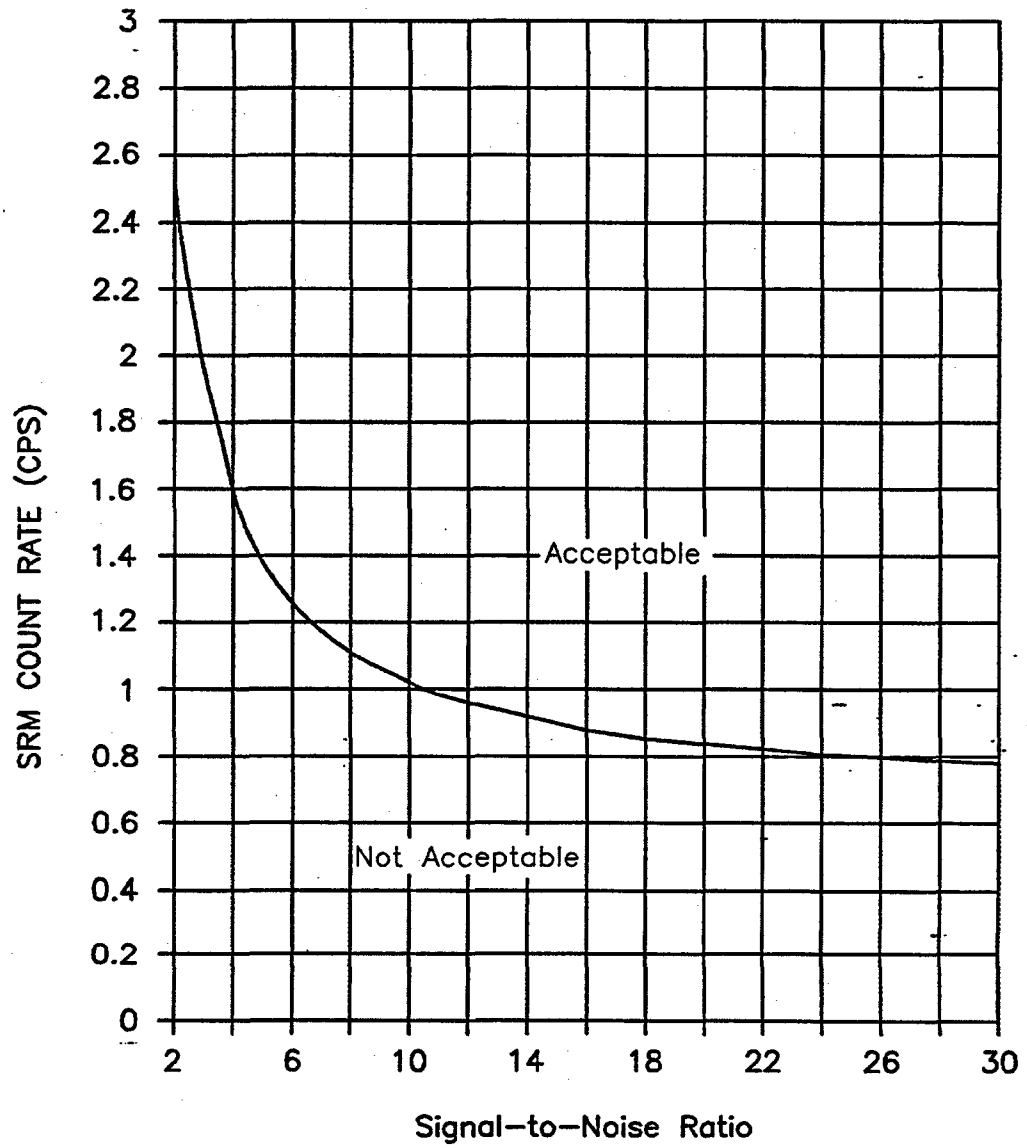

Figure 2.2–2
Minimum SRM Trip Setpoint Versus Signal–to–Noise Ratio

3.1 Reactivity Control Systems

3.1.3 Control Rod Block Instrumentation

TRO 3.1.3 The control rod block instrumentation for each function in Table 3.1.3-1 shall be OPERABLE.

APPLICABILITY: According to Table 3.1.3-1

ACTIONS

NOTE

Separate condition entry is allowed for each channel

CONDITION	REQUIRED ACTION	COMPLETION TIME
A. One or more required channels inoperable.	A.1 Enter the Condition referenced in Table 3.1.3-1 for the channel.	Immediately
B. As required by Required Action A.1 and referenced in Table 3.1.3-1.	B.1 Place at least one inoperable channel in the tripped condition. AND B.2 Place the inoperable channel in the tripped condition.	1 hour from discovery of loss of trip capability 7 days
C. As required by Required Action A.1 and referenced in Table 3.1.3-1.	C.1 Place the inoperable channel in the tripped condition.	12 hours
D. Required Actions and Completion Time of Conditions B or C not met.	D.1 Suspend Control Rod withdrawal.	Immediately

TECHNICAL REQUIREMENT SURVEILLANCE

----------NOTES----------

1. Refer to Table 3.1.3-1 to determine which TRSs apply for each Control Rod Block Function.

2. Neutron detectors may be excluded from CHANNEL CALIBRATION.

3. When a channel is placed in an inoperable status solely for performance of required Surveillances, entry into associated Conditions and Required Actions may be delayed for up to 6 hours provided at least one other OPERABLE channel in the same trip system is monitoring that parameter.

SURVEILLANCE		FREQUENCY
TRS 3.1.3.1	Perform CHANNEL CHECK	12 hours
TRS 3.1.3.2	----------NOTE---------- Only required to be performed when MLFPD is greater then FRTP. (ITS LCO 3.2.4 "APRM gain and setpoints" Required Action A.1) ---------- Verify APRM Setpoints or gains are adjusted for the calculated MFLPD.	12 hours
TRS 3.1.3.3	Perform CHANNEL FUNCTIONAL TEST	7 days
TRS 3.1.3.4	Perform CHANNEL FUNCTIONAL TEST	92 days
TRS 3.1.3.5	Perform CHANNEL CALIBRATION	184 days
TRS 3.1.3.6	Perform CHANNEL CALIBRATION	24 months
TRS 3.1.3.7	Perform LOGIC SYSTEM FUNCTIONAL TEST	24 months

TABLE 3.1.3-1 (Page 1 of 2)
CONTROL ROD BLOCK INSTRUMENTATION

FUNCTION	APPLICABLE MODES OR OTHER SPECIFIED CONDITIONS	REQUIRED CHANNELS PER TRIP FUNCTION	CONDITIONS REFERENCED FROM REQUIRED ACTION A.1	SURVEILLANCE REQUIREMENTS	ALLOWABLE VALUE
1. APRM					
a. Neutron Flux - High Setdown	2, 5[a]	4	B	TRS 3.1.3.1 TRS 3.1.3.4 TRS 3.1.3.5	≤ 14% RTP
b. Flow Biased Simulated Thermal Power - High	1	4	B	TRS 3.1.3.1 TRS 3.1.3.2 TRS 3.1.3.4 TRS 3.1.3.5	See COLR TRO 3.2[b]
c. Fixed Neutron Flux - High	1	4	B	TRS 3.1.3.1 TRS 3.1.3.4 TRS 3.1.3.5	≤ 111% RTP
d. Downscale	1	4	B	TRS 3.1.3.1 TRS 3.1.3.4 TRS 3.1.3.5	≥ 3% RTP
e. Inop	1, 2	4	B	TRS 3.1.3.4	NA
	5[a]	4	B	TRS 3.1.3.4	NA
2. Source Range Monitors					
a. Detector not full in	2[c]	3	B	TRS 3.1.3.3 TRS 3.1.3.7	NA
	5[i]	2	B	TRS 3.1.3.3 TRS 3.1.3.7	NA
b. Upscale	2[d]	3	B	TRS 3.1.3.3 TRS 3.1.3.6 TRS 3.1.3.7	≤ 3.3E5 cps
	5[i]	2	B	TRS 3.1.3.3 TRS 3.1.3.6 TRS 3.1.3.7	≤ 3.3E5 cps
c. Inop	2[d]	3	B	TRS 3.1.3.3 TRS 3.1.3.7	NA
	5[i]	2	B	TRS 3.1.3.3 TRS 3.1.3.7	NA

(continued)

[a] When performing Shutdown Margin Demonstration per Technical Specification 3.10.8.
[b] See COLR for single loop operation per Technical Specification 3.4.1, Recirculation Loops Operating
[c] When not automatically bypassed with SRM counts ≥ 100 cps or the IRM channels on range 3 or higher.
[d] When not automatically bypassed with IRM channels on range 8 or higher.
[i] With any control rod withdrawn from a core cell containing one or more fuel assemblies.

TABLE 3.1.3-1 (Page 2 of 2)
CONTROL ROD BLOCK INSTRUMENTATION

FUNCTION	APPLICABLE MODES OR OTHER SPECIFIED CONDITIONS	REQUIRED CHANNELS PER TRIP FUNCTION	CONDITIONS REFERENCED FROM REQUIRED ACTION A.1	SURVEILLANCE REQUIREMENTS	ALLOWABLE VALUE
d. Downscale	2[e]	3	B	TRS 3.1.3.3 TRS 3.1.3.6 TRS 3.1.3.7	≥ 1.8 cps[f]
	5[i] [j]	2	B	TRS 3.1.3.3 TRS 3.1.3.6 TRS 3.1.3.7	≥ 1.8 cps[f]
3. Intermediate Range Monitors					
a. Detector not full in	2, 5[i]	6	B	TRS 3.1.3.3 TRS 3.1.3.7	NA
b. Neutron Flux - High	2, 5[i]	6	B	TRS 3.1.3.1 TRS 3.1.3.3 TRS 3.1.3.5 TRS 3.1.3.7	≤ 110/125 divisions of full scale
c. Inop	2, 5[i]	6	B	TRS 3.1.3.3 TRS 3.1.3.7	NA
d. Downscale	2[g] 5[i]	6	B	TRS 3.1.3.1 TRS 3.1.3.3 TRS 3.1.3.5 TRS 3.1.3.7	3/125 divisions of full scale
4. Scram Discharge Volume Water Level-High	1, 2, 5[h]	2	C	TRS 3.1.3.4 TRS 3.1.3.6	≤ 36.5 gallons
5. Reactor Coolant System Recirculation Flow					
a. Upscale	1	2	C	TRS 3.1.3.4 TRS 3.1.3.5	≤ 117/125 divisions of full scale
b. Inop	1	2	C	TRS 3.1.3.4	NA
c. Comparator	1	2	C	TRS 3.1.3.4 TRS 3.1.3.5	≤ 11% flow deviation

(e) When not automatically bypassed with IRMs on range 3 or higher.
(f) With a signal-to-noise ratio ≥ 2, or within the limits of TS Figure 3.3.1.2-1.
(g) When not automatically bypassed with IRM channels on range 1.
(h) When more than one control rod is withdrawn. Not applicable to control rods removed per Technical Specification 3.10.5 or 3.10.6.
(i) Not required when eight or fewer fuel assemblies (adjacent to the SRMs) are in the core.
(j) With any control rod withdrawn from a core cell containing one or more fuel assemblies.

B 3.1.3 Control Rod Block Instrumentation

BASES

TRO

The Control Rod Block Instrumentation is a portion of the Reactor Manual Control System (RMCS), which upon receipt of input signals from other systems and subsystems, inhibits movement or selection of control rods (Reference 1). The purpose of the Control Rod Block function is to avoid conditions that would require Reactor Protection System (RPS) action if allowed to proceed.

The specific Functions associated with the TRM Control Rod Block Instrumentation are identified in Table 3.1.3-1 and are discussed below.

1. Average Power Range Monitors (APRM)
2. Source Range Monitors (SRM)
3. Intermediate Range Monitors (IRM)

The same grouping of neutron monitoring equipment (APRM, SRM, and IRM) that is used in the RPS is also used in the rod block circuitry. Half of the total monitors (APRM, SRM, and IRM) provide inputs to one of the two RMCS rod block logic circuits and the remaining half provide inputs to the other RMCS rod block circuit.

The APRM rod block settings are varied as a function of Reactor Coolant System (RCS) recirculation flow. The settings are selected so that all the neutron monitoring rod blocks are sufficient to avoid an RPS action. Mechanical switches in the SRM and IRM detector drive systems provide the position signals used to indicate that a detector is not fully inserted.

The SRM minimum count rate Allowable Value is discussed in the TS Bases for SR 3.3.1.2.4.

4. Scram Discharge Volume Water Level - High

Scram Discharge Volume Water Level – High signals are provided as inputs into both rod block logic circuits. Both rod block logic circuits sense when the high water level scram trip for the Scram Discharge Volume is bypassed. The rod block from Scram Discharge Volume Water Level – High comes from one of two float type level switches installed in each of two scram discharge instrument volumes. The second float switch in each instrument volume provides a control room annunciation of increasing level below the level at which a rod block occurs.

(continued)

B 3.1.3 Control Rod Block Instrumentation

BASES

TRO (continued)

5. RCS Recirculation Flow

RCS Recirculation Flow units A and C provide upscale, inoperable, and comparator rod block trip signals to one of the two RMCS rod block logic systems, and RCS Recirculation Flow units B and D provide these same trip signals to the other rod block logic system.

The RCS Recirculation Flow converter upscale or inoperative alarm assures that no control rod is withdrawn unless the recirculation flow converters, which are necessary for the power operation of the Rod Block Monitors, are OPERABLE. The recirculation flow comparator alarm or inoperative Functions assure that no control rod is withdrawn unless the difference between the outputs of the flow converters is within limits and the comparator is in service.

ACTIONS

The ACTIONS are defined to ensure proper corrective measures are taken in response to the inoperable components.

TRS

The TRSs are performed at the specified Frequency to ensure that the Control Rod Block Function is maintained OPERABLE.

TRS 3.1.3.1, TRS 3.1.3.3, TRS 3.1.3.4, TRS 3.1.3.5, TRS 3.1.3.6, and TRS 3.1.3.7

Control Rod Block Instrumentation surveillances are performed consistent with the Bases for the comparable channels in LCO 3.3.1.1 and LCO 3.3.1.2.

TRS 3.1.3.2

TRS 3.1.3.2 is necessary to ensure the APRM Flow Biased Simulated Thermal Power-High Rod Block is properly adjusted for MFLPD. The MFLPD is required to be calculated and compared to Fraction of Rated Thermal Power (FRTP) or APRM gain or setpoints to ensure the reactor is operating within the assumptions of the safety analysis (LCO 3.2.4, "APRM Gain and Setpoints"). This TRS is only required when MFLPD is greater than FRTP. The 12-hour Frequency is required because more rapid changes in power distribution are typically expected.

(continued)

B 3.1.3 Control Rod Block Instrumentation

BASES (continued)

REFERENCE 1. FSAR Section 7.7.1