AmerGen Energy Company, LLC
200 Exelon Way
Kennett Square, PA 19348

www.exeloncorp.com

AmerGen
An Exelon Company

November 17, 2005
2130-05-20218

U. S. Nuclear Regulatory Commission
Attn: Document Control Desk
Washington, DC 20555-0001

Oyster Creek Generating Station (Oyster Creek)
Facility Operating License No. DPR-16
NRC Docket No. 50-219

Subject: Response To Request For Additional Information – Regarding NRC Generic Letter (GL) 2003-01, "Control Room Habitability," dated June 12, 2003 (TAC NO. MB9832)

Reference: (1) NRC letter from P. S. Tam to C. M. Crane, dated September 14, 2005, Request for Additional Information (RAI) Regarding Generic Letter (GL) 2003-01, "Control Room Habitability" (TAC No. MB9832)

This letter provides the response to the NRC request for additional information (Reference 1) regarding Oyster Creek response to NRC GL 2003-01, "Control Room Habitability," submitted to the NRC on December 9, 2003. The additional information is provided in Enclosure 1 to this letter.

Regulatory commitments established by this submittal are identified in Enclosure 2. If any additional information is needed, please contact David J. Distel at (610) 765-5517.

Respectfully,

Pamela B. Cowan
Director - Licensing & Regulatory Affairs
AmerGen Energy Company, LLC

Enclosures: 1) Response to Request for Additional Information
2) List of Commitments

cc: S. J. Collins, USNRC Administrator, Region I
G. E. Miller, USNRC Project Manager, Oyster Creek
M. S. Ferdas, USNRC Senior Resident Inspector, Oyster Creek
File No. 03093

ENCLOSURE 1

OYSTER CREEK

RESPONSE TO REQUEST FOR ADDITIONAL INFORMATION

REGARDING NRC GENERIC LETTER (GL) 2003-01, "CONTROL ROOM HABITABILITY" DATED JUNE 12, 2003

1. **NRC Question**

Your response to the GL does not confirm your assumptions for the inleakage characteristics of the control room envelope (CRE). For radiological and hazardous chemical events, in accordance with Items 1a and 1b of the GL, please describe the test and measurements you have performed which demonstrated that the inleakage characteristics of the CRE, including its walls, floors and ceilings, are consistent with the OCNGS licensing basis. Also, please describe how you have determined that the byproducts of a fire or the inadvertent actuation of a fire suppression system will not propagate such that reactor control would be unattainable from either the control room and the alternate shutdown panels.

Response

In response to the NRC GL 2003-01, Items 1(a) and 1(b), it was determined that inleakage testing of the Oyster Creek Control Room Envelope (CRE) would not produce results that would impact control room habitability based on the design and operation of the Control Room Heating, Ventilating, and Air Conditioning (HVAC) System, and the conservative assumptions and parameters utilized in the control room operator radiological analysis subsequently submitted to NRC on March 28, 2005.

Control Room Response During Radiological Release

The Oyster Creek Control Room HVAC system contains no HEPA or Charcoal filters. Therefore, all intake air into the control room is unfiltered. As a result, the radionuclide concentration inside the control room reaches equilibrium with the concentration of the plume at the Control Room HVAC System air intake within a short period of time after the postulated release. Equilibrium occurs whether the ventilation system was in purge or partial recirculation mode of operation. In the purge mode (14,000 cfm system flow) the control room volume is changed once every 2 minutes. In the partial recirculation mode (2,000 cfm system intake flow) the control room volume is changed once every 14 minutes. It would require only one hour for the control room to be at radiological equilibrium with the outside environment while in the partial recirculation mode. The dose to control room operators is calculated over a total duration of 720 hours. Oyster Creek LAR No. 315, "Application of Alternative Source Term, submitted to NRC on March 28, 2005 (2130-05-20040), reanalyzed the design basis LOCA radiological dose consequences for Oyster Creek using Alternative Source Term methodology. The control room operator dose consequences are conservatively analyzed using the full Control Room HVAC System flow seen during the purge mode of operation. The design basis control room operator calculated dose is 3.61 REM TEDE assuming the 14,000 cfm full, unfiltered Control Room HVAC purge flow into the control room. It should be noted that the purge mode (14,000 cfm intake) is not expected to be in operation during a radiological event (i.e., LOCA). Therefore, the assumption that the Control Room HVAC system is operating in the purge mode for the duration of the LOCA results in a conservative radiological dose to control room operators. In both modes of operation (purge and partial recirculation) the radiation exposure to personnel in the control room remains within the regulatory limits.

In order to evaluate the impact of potential additional inleakage into the Oyster Creek control room on operator dose, a sensitivity study covering several varying rates of intake were made using RADTRAD. Note that all air intake into the Oyster Creek control room is unfiltered. The sensitivity study evaluated a single pathway, and therefore the dose values listed do not reflect the total control room operator dose. The data below confirms the relationship between unfiltered intake and the point of peak control room dose. This study demonstrates that there is no difference in control room dose between air intake rates from 4,000 to 80,000 cfm. This conclusion is valid for all applicable control room pathways. The value of 14,000 cfm was chosen in the design basis analysis because that is the value for the full purge mode of operation. It is not expected that the control room would be in this mode during a radiological emergency. Rather, it would be in the partial recirculation mode (2,000 cfm), which produces a slightly lower dose. The sensitivity study bounds the range of flow between the 2,000 cfm minimum flow in the partial recirculation mode, and the maximum flow of approximately 30,000 cfm for the unlikely event both fans are operating in the full purge mode. Therefore, since any increase in flow beyond 4,000 cfm does not cause an increase in dose, the amount of unfiltered inleakage does not affect the total calculated control room operator dose of 3.61 REM TEDE (calculated at 14,000 cfm), thereby negating the need for a tracer gas test.

Unfiltered Intake (cfm)	Dose (Rem)
2,000	1.22
4,000	1.23
6,000	1.23
8,000	1.23
10,000	1.23
12,000	1.23
14,000	1.23
20,000	1.23
25,000	1.23
30,000	1.23
40,000	1.23
80,000	1.23

Outside air from the Control Room HVAC System air intake contains the highest radioactivity concentration of any potential inleakage source to the Oyster Creek CRE. Radiological exposure for control room personnel due to inleakage from other sources is highly unlikely as described herein.

AmerGen has evaluated potential inleakage from unsealed ductwork and wall penetrations and determined that potential additional inleakage would not be significant, nor would it contribute significantly to control room operator dose. The majority of the control room ventilation system ductwork under negative pressure is in the Upper Cable Spreading Room adjacent to the CRE. A short run of negative pressure ductwork is located in the Lower Cable Spreading Room, which is within the CRE. Attachments 1 through 4 provide layout drawings of the Lower Cable Spreading Room, Main Control

Room, and Upper Cable Spreading Room. Attachment 5 provides the Control Room HVAC Flow Diagram.

The Control Room and the Lower Cable Spreading Room are serviced by the same ventilation system. Both areas are pressurized in the partial recirculation mode of operation, thereby preventing infiltration from adjacent areas through penetrations and doors. In addition, the walls, floors and ceilings are concrete or concrete block, and all penetrations into adjacent areas have fire rated seals and the conduits through these penetration seals are sealed internally. These penetration seals are included in a surveillance procedure to visually verify their integrity on an annual basis.

The Upper Cable Spreading Room is not part of the CRE and has no ventilation system. Therefore, no outside air is brought into the room. The room should be at atmospheric conditions. The North wall, the East wall, and part of the South wall are adjacent to the outside environment. There are no penetrations on the North and South walls. The East wall contains three ventilation openings that are part of the "A" Control Room ventilation system.

The South wall door is an entrance to a vestibule that has a door to the outside environment and another door that goes to a stairwell to the Main Office Building area. The vestibule wall and part of the stairwell wall adjacent to the Upper Cable Spreading Room contains penetrations that have fire rated seals and the conduits through these penetration seals are sealed internally. The Upper Cable Spreading Room ceiling is reinforced concrete exposed to the outside environment or to adjacent areas such as the chiller building and the cable bridge tunnels that are exposed to the outside environment. The West wall is adjacent to the Turbine Building and is a concrete wall that has seven penetrations, which all have fire rated seals and the conduits through these penetration seals are also sealed internally.

Because the Control Room and Lower Cable Spreading Room are maintained in a pressurized condition by the Control Room HVAC system in partial recirculation mode, the Upper Cable Spreading Room is the only possible source of radioactivity inleakage at concentrations higher than that found in the CRE air intake. The Upper Cable Spreading Room is not considered a credible inleakage path, because the only paths for air other than that outside the plant to enter the area, is to travel around two closed fire doors in the vestibule entrance, or through fire penetrations in the South and West walls. No inleakage is expected from these sources since no differential pressure will exist that will drive inleakage into the Upper Cable Spreading Room. All adjacent areas, other than the Control Room itself, are at atmospheric or negative pressure during accident and non-accident conditions.

Based on the Control Room HVAC System operation described above, and the Oyster Creek CRE and Upper Cable Spreading Room configuration, it has been determined that there are no credible inleakage paths beyond the ventilation system air intake assumed in the control room operator dose analysis. Therefore, it is concluded that inleakage testing of the CRE using a tracer gas would not identify any significant additional inleakage that would adversely affect the calculated control room operator radiation dose.

Control Room Response During Hazardous Chemical Release

Inleakage testing of the CRE is not required with respect to hazardous chemical release. The Oyster Creek design basis hazardous chemical release analysis assumes a limited amount of hazardous chemicals onsite, as described in UFSAR Sections 6.4.4.2.1 and 6.4.7. A maximum of three (3) - 150 lb cylinders of chlorine gas used in the New Radwaste Chlorination System, located at grade elevation about 380 feet west of the Control Room HVAC system air intake, which is about 41 feet above grade with the turbine building as an intervening structure. A chlorine detector located in the chlorination building alarms in the control room. Analysis has shown that there is sufficient time for operators to don self-contained breathing apparatus (SCBA) before the chlorine concentration within the control room reaches incapacitation levels, while in the purge mode of operation (UFSAR sections 6.4.4.2.1 and 6.4.7, reference 4). SCBAs are available in the control room in sufficient quantities for operator use in the event of a release of hazardous materials that could affect plant operation. Spare bottles are available as well as the capability to refill empty bottles with uncontaminated air. Procedures are in place directing operators to use SCBAs, when chlorine is detected in the CRE. Operators are trained and qualified on the use of the SCBAs. Operators are required to have a medical and respirator fit performed and training on the donning and use of respirators and SCBAs. The annual fire brigade training has operators using the SCBAs in an actual fire exercise.

The Control Room HVAC system can be manually placed in the full recirculation mode via the mode selection switch. When the mode selection switch is placed in the full recirculation mode of operation, the system automatically closes the supply and the exhaust dampers and opens the recirculation damper. This isolates the control room ventilation system, thereby preventing the intake and the exhaust of air to and from the CRE. The CRE is not pressurized in the full recirculation mode of operation. Chlorine gas could enter the CRE by inleakage through the supply and exhaust dampers (since they are not bubble tight) and through the unsealed ductwork under negative pressure. This is the same ductwork in the Upper Cable Spreading Room, as described above, for the radiological event. The same description of the boundaries of the CRE and the Upper Cable Spreading Room, and the torturous path the contaminated air must take also apply to the chlorine gas. The system being in full recirculation mode will minimize the amount of chlorine that enters the CRE. Even in the most conservative ventilation mode (i.e., purge mode), operators have sufficient time to don SCBAs prior to levels reaching threshold limits in the control room. Therefore, the affect of potential inleakage through other sources is negligible and will have no additional impact on control room habitability.

Onsite hazardous chemical usage and storage is controlled by approved station procedures. An assessment of offsite hazardous chemicals in stationary facilities within a 5-mile radius of the plant was performed in 2002. Results were found to be acceptable, with no additional hazards for consideration. Offsite mobile sources of hazardous chemicals were evaluated using risk to reflect the probability of a release from such a source. The risk of such accidents was determined to be negligible.

Reactor Control Capability During Smoke Events

The following describes the basis for the determination that the byproducts of a fire or the inadvertent actuation of the fire suppression (halon) system will not prevent operators from maintaining reactor control from either the control room or the alternate shutdown panels.

Control Room

In an event where smoke is generated from within the control room, the Control Room HVAC system will shutdown automatically due to the fire detection system response. The halon fire suppression system will actuate automatically. When the fire is under control and extinguished, a fire detection bypass switch allows manual operation of the Control Room HVAC system in accordance with plant procedures. The system can be placed in the purge mode, which supplies 100% outside air to remove smoke and halon from the area. In the purge mode the control room volume is changed once every 2 minutes and the control room atmosphere will be adequately ventilated to ensure continued habitability. SCBAs are available for use by control room operators if needed.

Smoke originating from areas outside of the control room is prevented from entering the control room by smoke detection in the air supply duct, and a back-draft or gravity type smoke damper in the return air register in the control room. The smoke detector in the supply duct will automatically shut off the Control Room HVAC supply fan thereby, preventing smoke from a fire in an outside area from being drawn into the control room through the ventilation system. The back-draft damper allows airflow out of the control room, but not into the control room. If the supply fan is shut off due to a fire in the Lower Cable Spreading Room, the back-draft damper closes, thereby preventing the intrusion of smoke into the control room.

Inadvertent operation of the halon suppression system in the control room will not have an adverse affect on the control room operators. Halon systems are designed to provide an initial concentration below the 10% threshold for personnel health. The control room halon system is a local application to certain control room panels and does not flood the entire control room. Therefore, the halon concentration in the entire control room will be diluted and remain well below 10%. The discharged halon could activate the ionization detectors in the control room and automatically shutdown the Control Room HVAC supply fan. A bypass switch can be used in accordance with plant procedures to defeat the fan trip function and the Control Room HVAC system can be restarted and placed in the purge mode and the halon will be removed. In the purge mode the control room volume is changed once every 2 minutes.

Alternate Shutdown System

The use of the alternate shutdown system is based on a single fire in the control room requiring the evacuation of the control room. The control room fire area, as defined in the Fire Hazard Analysis Report, consists of the Lower Cable Spreading Room, the Control Room, the Upper Cable Spreading Room, and the cable bridge tunnels. A second fire in another area of the plant is not postulated under Appendix R.

If the control room must be evacuated, the ability to maintain hot shutdown of the reactor and subsequent transition to cold shutdown from locations outside the control room is provided by the alternate shutdown system.

The location of the Alternate Control Stations (ACSs) are as follows: RSP and LSP-1A2 are located in the 480V Switchgear Rooms, LSP-DG2 is located in the Emergency Diesel Generator (EDG) Building, LSP-1B3 and LSP-1B32 are located outside near the intake area, LSP-1D is located in the 4160V Switchgear area and LSP-1AB2 is located in Reactor Building elevation 23'.

The evaluation of the ACS locations remaining free of smoke with respect to a fire in the control room determined that:

1. The ACS panels LSP-DG2 located in the EDG building, LSP-1B3 and LSP-1B32 located outside near the intake area, and LSP-1D located in the "D" 4160V Switchgear Vault are unaffected because of their distance from the control room purge points.

2. The RSP located in the "B" 480V Switchgear Room would be affected but is mitigated by procedural actions (ABN-29) to shutdown the "B" 480V Switchgear Room ventilation system to prevent smoke intrusion into the area. The LSP-1A2 located in the "A" 480V Switchgear Room could be affected. The "A" 480V Switchgear Room ventilation intake is further away from the control room purge points than the "B" 480V Switchgear Room, but close enough where the unpredictability of outside wind conditions could affect it. The "A" 480V Switchgear Room ventilation system could bring control room purge smoke into the area and could actuate the halon system. Operator actions will be incorporated into plant procedures to prevent smoke intrusion into the 480V switchgear room by securing the "A" 480V Switchgear Room ventilation system. Therefore, LSP–1A2 will remain functional and available for operator action.

3. The LSP-1AB2 located in Reactor Building 23' elevation would be affected. The Reactor Building ventilation intake is located close to the control room purge points and could bring smoke into the Reactor Building, and actuate water suppression systems on the Reactor Building 23' elevation. Operator actions will be incorporated into plant procedures to prevent smoke intrusion into the Reactor Building by securing the Reactor Building ventilation system. Therefore, LSP-1AB2 is accessible, functional and will remain available for operator action in the event of smoke intrusion.

Therefore, the byproducts of a fire or the inadvertent actuation of a fire suppression system will not propagate such that reactor control can not be maintained from either the control room or the alternate shutdown panels.

2. **NRC Question**

For Item 1(c), the NRC staff believes that, in addition to a Section 6 program for control room integrity, an additional technical specification to measure control room ventilation system makeup and recirculation flowrates is necessary to confirm compliance with OCNGS's licensing basis.

Response

AmerGen letter to the NRC, dated July 11, 2005 (2130-05-20130), withdrew the proposed Oyster Creek control room envelope integrity program license amendment request and committed to evaluate this Technical Specification change with respect to the elements contained in TSTF traveler-448 (TSTF-448), and resubmit a proposed license amendment request based on this evaluation within 90 days following NRC approval of TSTF-448. The need for additional Technical Specification surveillance requirements to measure control room ventilation system makeup and recirculation flow rates will be addressed at that time.

ATTACHMENT 1

Lower Cable Spreading Room

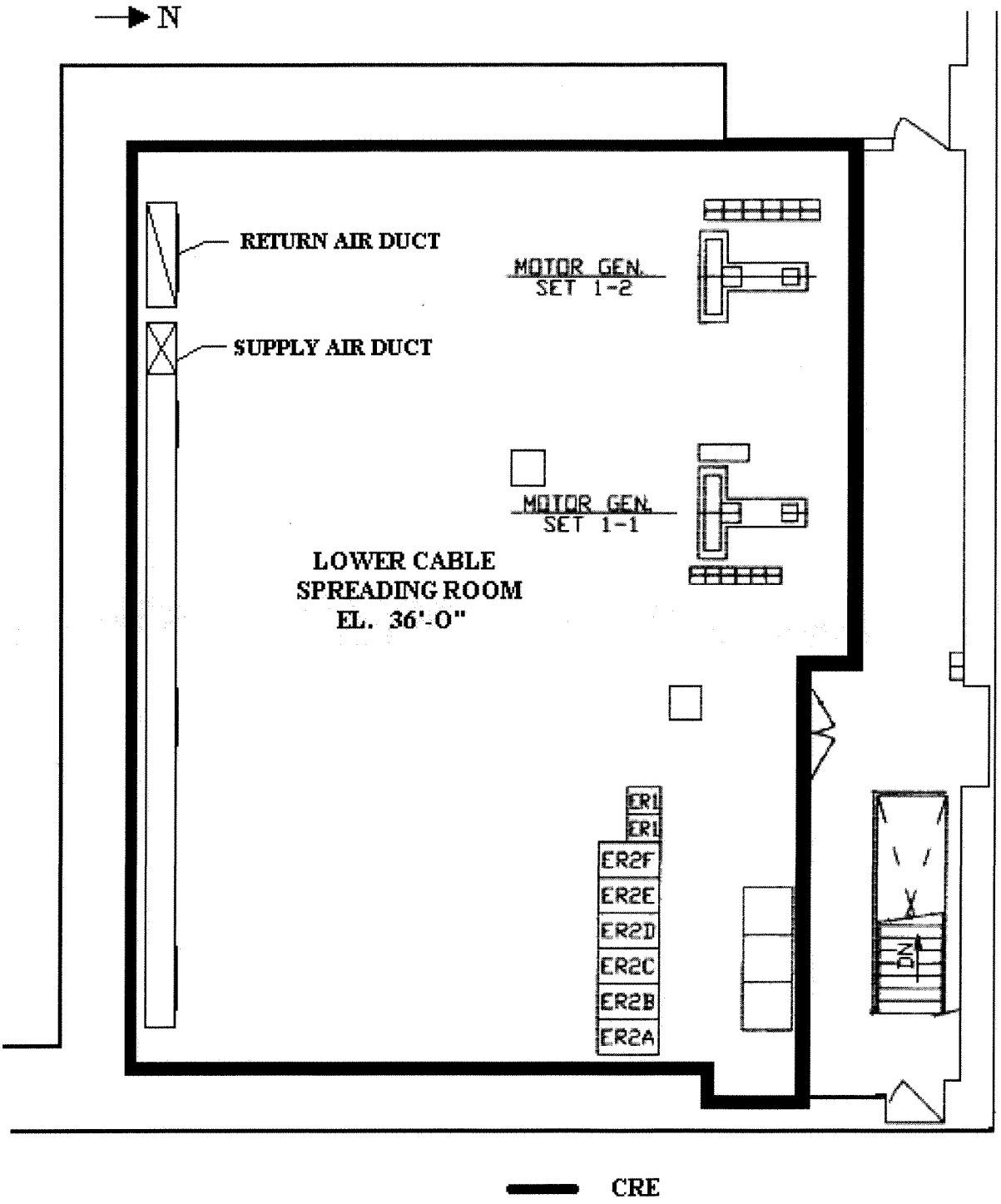

ATTACHMENT 2

Control Room

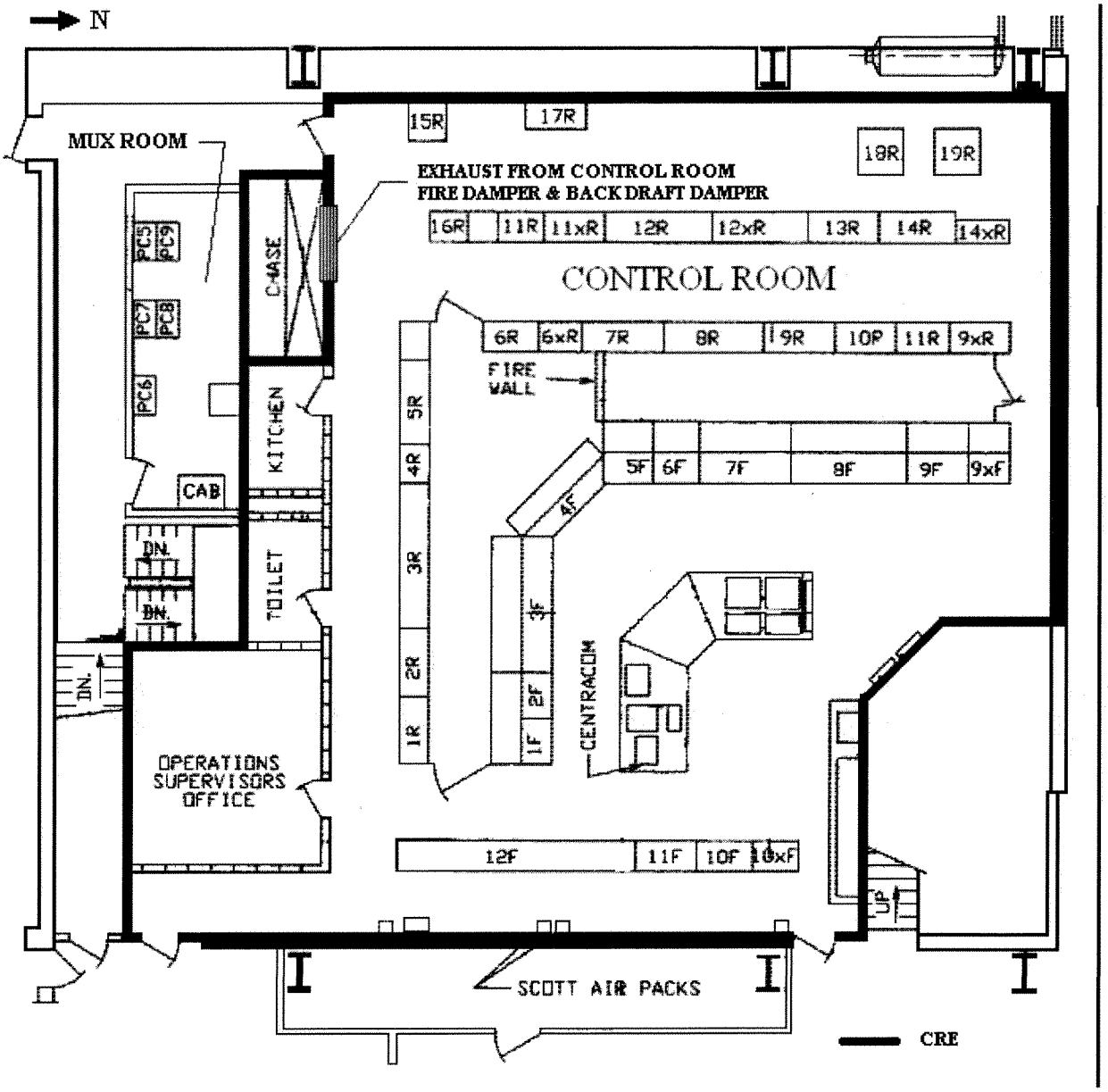

ATTACHMENT 3

Upper Cable Spreading Room

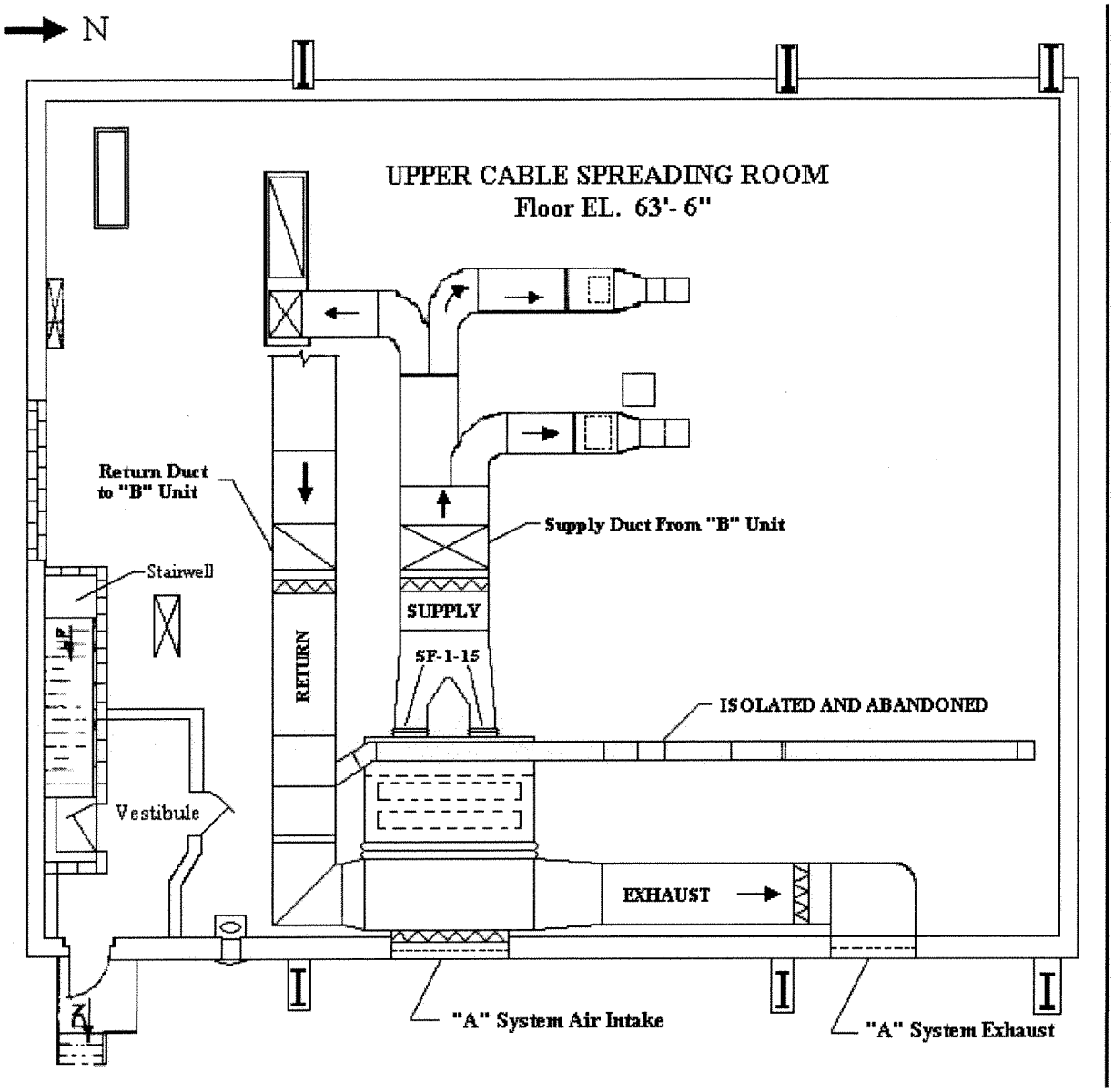

ATTACHMENT 4

Upper Cable Spreading Room

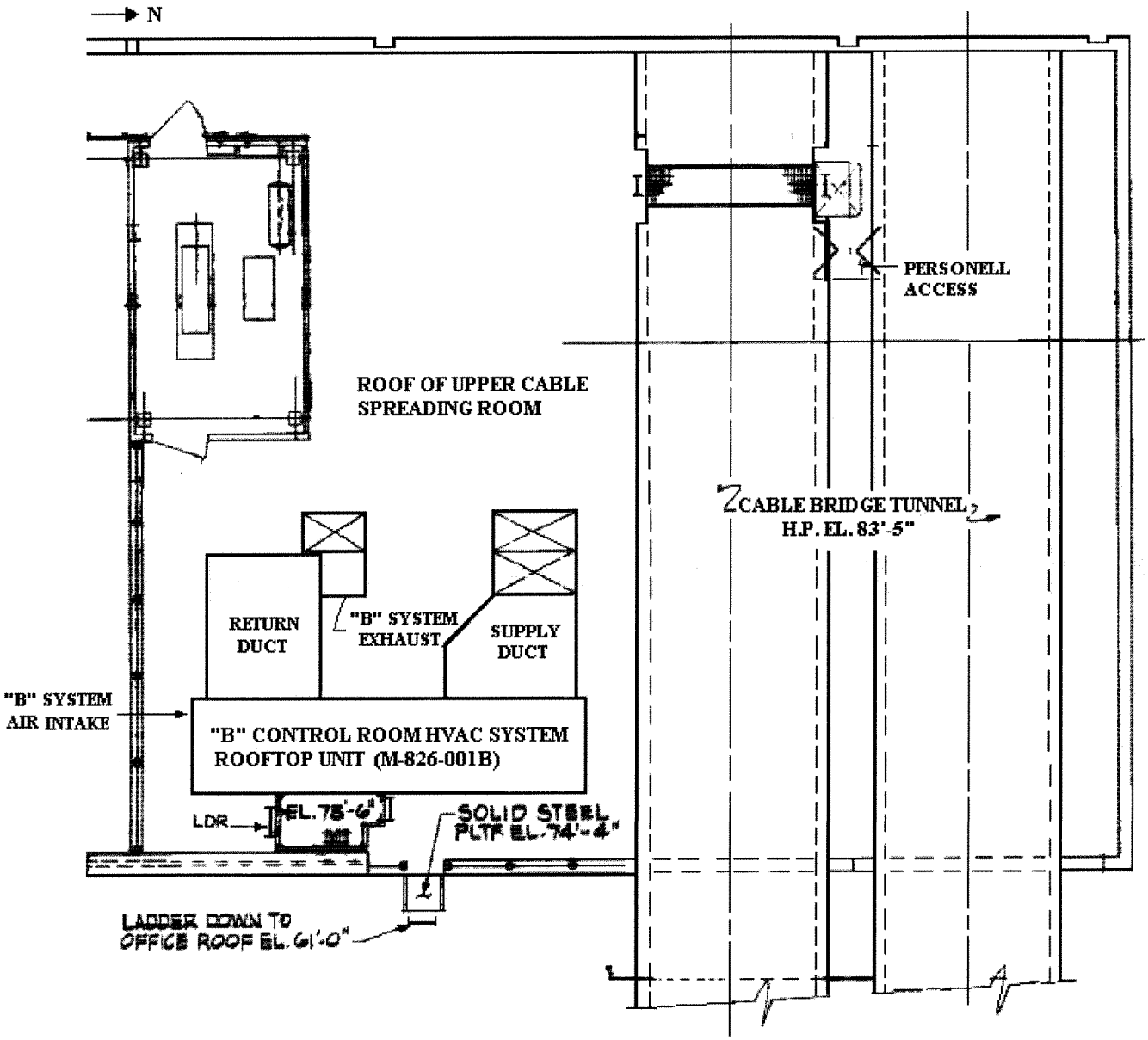

ATTACHMENT 5
CONTROL ROOM HVAC FLOW DIAGRAM

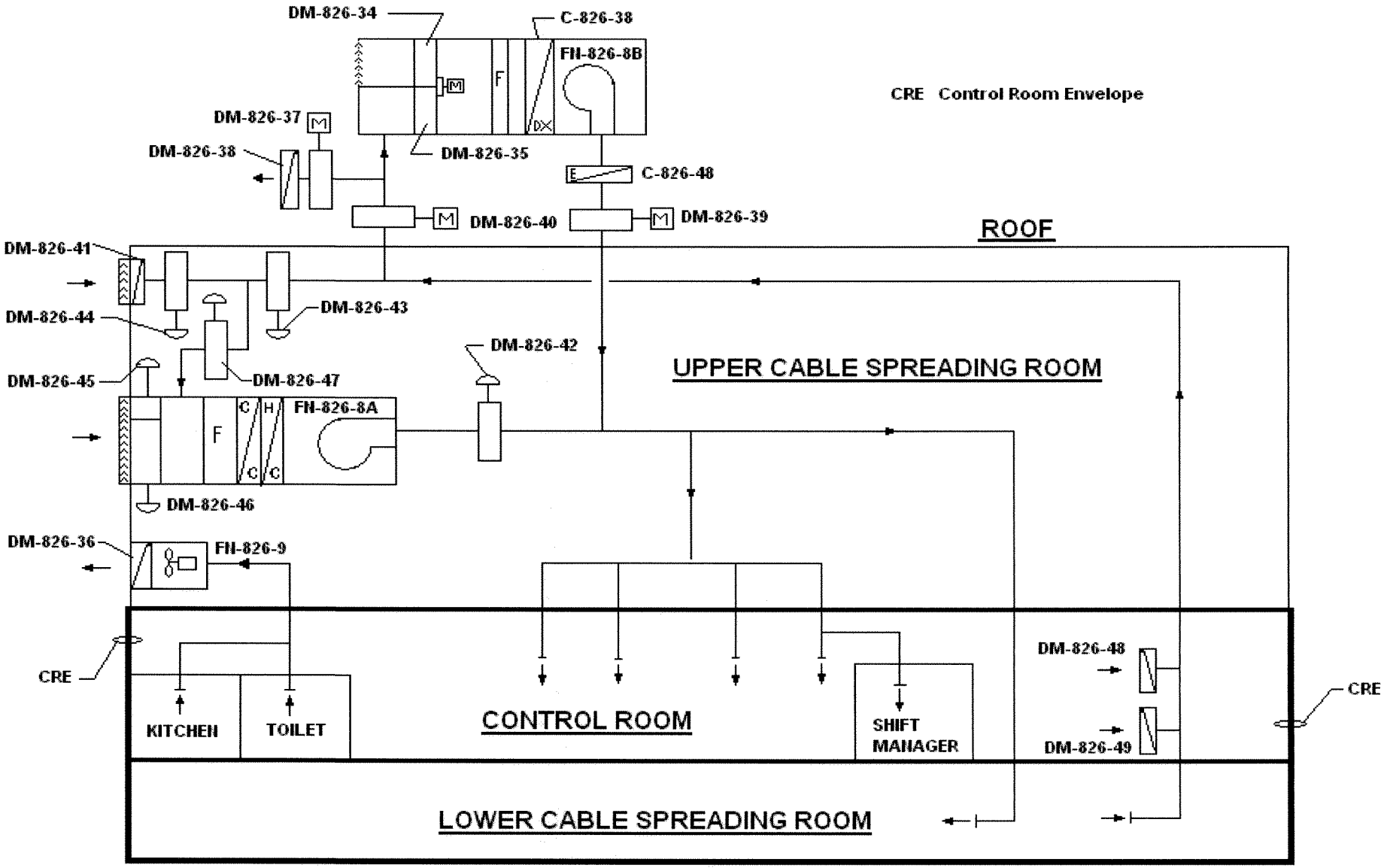

ENCLOSURE 2

LIST OF COMMITMENTS

SUMMARY OF AMERGEN COMMITMENTS

The following table identifies commitments made in this document by AmerGen. (Any other actions discussed in the submittal represent intended or planned actions by AmerGen. They are described to the NRC for the NRC's information and are not regulatory commitments.)

COMMITMENT	COMMITTED DATE OR "OUTAGE"
Operator actions to secure the "A" 480V Switchgear Room Ventilation System and the Reactor Building Ventilation System to prevent smoke intrusion will be incorporated into plant procedures.	December 31, 2005