NUREG-1630
SAFETY EVALUATION REPORT RELATED TO THE ISSUANCE OF A FACILITY OPERATING LICENSE FOR THE RESEARCH REACTOR AT McCLELLAN AIR FORCE BASE

LICENSE NO. R-130
DOCKET NO. 50-607

DATED AUGUST 13, 1998

REDACTED VERSION*
IN ACCORDANCE WITH
10 CFR 2.390(d)(1)

*Redacted text and figures blacked out or denoted by brackets

NUREG-1630

SAFETY EVALUATION REPORT RELATED TO THE ISSUANCE OF A FACILITY OPERATING LICENSE FOR THE RESEARCH REACTOR AT McCLELLAN AIR FORCE BASE (Docket 50-607)

ABSTRACT

This Safety Evaluation Report (SER) summarizes the findings of a safety review conducted by the staff of the U.S. Nuclear Regulatory Commission (NRC), Office of Nuclear Reactor Regulation. The staff conducted this review in response to an application filed by the U.S. Air Force, McClellan Air Force Base (the applicant) for a Facility Operating License to operate the McClellan TRIGA research reactor. The facility is on the McClellan Air Force Base near Sacramento, California. In its safety review, the staff considered information submitted by the applicant, and first-hand on-site observations by the NRC personnel. On the basis of this review, the staff concludes that the McClellan TRIGA reactor can operate in accordance with its application and technical specifications without endangering the health and safety of the public and facility staff.

CONTENTS

ABSTRACT iii

1 INTRODUCTION 1-1
1.1 Overview 1-1
1.2 Summary and Conclusions Regarding the Principal Safety Considerations 1-5
1.3 History 1-6
1.4 Reactor Description 1-7
1.5 Facilities and Equipment 1-7
1.6 Comparison with Similar Facilities 1-8
1.7 Nuclear Waste Policy Act of 1982 1-8
1.8 Conclusions 1-8

2 SITE CHARACTERISTICS 2-1
2.1 Reactor Site 2-1
2.2 Demography 2-1
2.3 Nearby Industrial, Transportation, and Military Facilities 2-1
2.3.1 Industry 2-3
2.3.2 Transportation 2-3
2.3.3 Military Facilities 2-4
2.4 Climatology and Meteorology 2-6
2.4.1 Climatology 2-6
2.4.2 Temperature and Wind Variability 2-6
2.4.3 Precipitation and Humidity 2-7
2.4.4 Severe Weather 2-7
2.5 Geology, Seismology, and Geotechnical Engineering 2-7
2.5.1 Regional Geology and Seismicity 2-7
2.5.2 Site Geology 2-8
2.5.3 Maximum Earthquake Potential 2-8
2.5.4 Vibratory Ground Motion 2-10
2.5.5 Surface Faulting 2-10

2.5.6 Liquefaction Potential 2-10
2.6 Hydrology 2-10
2.7 Conclusions 2-11

3 DESIGN OF STRUCTURES, SYSTEMS, AND COMPONENTS 3-1
3.1 Description of the Reactor Facility 3-1
3.2 Mechanical Systems and Components 3-3
3.3 General Design Criteria 3-3
3.4 Conclusions 3-5

4 REACTOR 4-1
4.1 Introduction 4-1
4.2 Reactor Core 4-1
4.2.1 Fuel-Moderator Element 4-3
4.2.2 Reflector 4-5
4.2.3 Grid Plates 4-5
4.2.4 Moderator Elements 4-6
4.2.5 Neutron Source 4-6
4.2.6 Control Rods 4-6
4.2.7 Reference Cores 4-7
4.3 Reactor Tank 4-12
4.4 Reactor Instrumentation 4-12
4.5 Thermal-Hydraulics Analysis 4-14
4.6 Safety Limits 4-16
4.7 Limiting Safety System Settings 4-18
4.8 Operating Conditions 4-20
4.9 Pulse Mode of Operation 4-20
4.10 Shutdown Margin, Excess Reactivity and Experimental Reactivity Worth 4-21
4.11 Conclusions 4-23

5 REACTOR COOLANT SYSTEMS 5-1
5.1 Systems Summary 5-1
5.2 Conclusions 5-7

6 ENGINEERED SAFETY FEATURES 6-1
6.1 Emergency Core Cooling System 6-1
6.2 Ventilation System 6-3
6.3 Conclusions 6-5

7 INSTRUMENTATION AND CONTROL 7-1
7.1 Introduction 7-1
7.2 Reactor Operating Controls 7-2
7.3 Cathode-ray Tube Displays 7-7
7.4 Evaluation of Instrument and Control System 7-9
7.4.1 Hardware and Systems Assessment 7-9
7.4.1.1 Environmental and Seismic Qualification 7-9
7.4.1.2 Electromagnetic Interference 7-10
7.4.1.3 Power Supplies 7-10
7.4.1.4 Failure Modes and Effects 7-11
7.4.1.5 Independence, Redundancy, and Diversity 7-11
7.4.1.6 Testing and Operating History 7-12
7.4.2 Software Assessment 7-12
7.4.2.1 Criteria 7-12
7.4.2.2 Verification and Validation Plan 7-13
7.4.2.3 Independence 7-14
7.4.2.4 Validation Testing 7-14
7.4.2.5 Discrepancy Resolution 7-14
7.4.2.6 Design Approach 7-15
7.4.2.7 Software Evaluation 7-15
7.4.2.8 Operator Task Analysis 7-15
7.5 Control Rods 7-16
7.6 Control Rod Drive Assemblies 7-16

7.7 Transient Rod Drive Assembly 7-17
7.8 Reactor Interlocks Associated with Bay Shutters and Doors 7-20
7.9 Conclusions 7-20

8 ELECTRICAL POWER 8-1
8.1 Main Power 8-1
8.2 Emergency Power 8-1
8.3 Conclusions 8-2

9 AUXILIARY SYSTEMS 9-1
9.1 Fuel Storage and Handling 9-1
9.2 Auxiliary Makeup Water System 9-4
9.3 Fire Protection 9-6
9.4 Air-Handling System 9-6
9.5 Communications and Closed-Circuit Television Systems 9-10
9.6 Conclusions 9-11

10 EXPERIMENTAL FACILITIES 10-1
10.1 Introduction 10-1
10.2 Experimental Facilities 10-1
10.2.1 Beam Tubes 10-1
10.2.2 In-Core Facilities 10-1
10.2.3 Pneumatic (Rabbit) Systems 10-1
10.2.4 BNCT Facility 10-2
10.3 Experimental Review 10-2
10.4 Conclusions 10-7

11 RADIATION PROTECTION AND WASTE MANAGEMENT 11-1
11.1 Introduction 11-1
11.2 ALARA Commitment 11-1
11.3 Health Physics Staff 11-2
11.3.1 Health Physics Procedures 11-2

11.3.2 Health Physics Training 11-2
11.4 Radiation Sources 11-2
11.4.1 Reactor 11-3
11.4.2 Radiation Sources 11-3
11.4.2.1 Specific Radiation Sources 11-5
11.4.2.2 Airborne Radiation Sources 11-5
11.4.2.3 Ar-41 in the Radiography Bays 11-7
11.4.2.4 Ar-41 in the Reactor Room 11-7
11.4.2.5 Ar-41 from the Pneumatic Transfer System 11-8
11.4.2.6 Ar-41 Release to the Unrestricted Area 11-8
11.4.2.7 N-16 in the Reactor Room 11-9
11.4.2.8 Liquid Radioactive Sources 11-11
11.4.2.9 Radioactivity in the Primary Coolant 11-11
11.4.2.10 Solid Radiation Sources 11-13
11.5 Routine Monitoring 11-13
11.5.1 Health Physics Instrumentation 11-13
11.5.2 Fixed-Position Monitors 11-13
11.5.3 Monitoring for Radiation Levels and Contamination 11-14
11.5.4 Radiation Monitoring Equipment 11-17
11.5.5 Environmental Monitoring 11-20
11.5.6 Personnel Radiation Monitoring 11-21
11.6 Radioactive Waste Management 11-23
11.6.1 Gaseous Waste 11-23
11.6.2 Liquid Waste 11-24
11.6.3 Solid Waste 11-24
11.7 Conclusions 11-24

12 CONDUCT OF OPERATIONS 12-1
12.1 Overall Organization 12-1
12.2 Training 12-1
12.3 Operational Review and Audits 12-5
12.4 Procedures 12-6

12.5 Reporting and Records Requirements 12-8
12.5.1 Reports 12-8
12.5.1.1 Special Reports 12-8
12.5.1.2 Required Actions 12-9
12.5.1.3 Annual Operating Report 12-10
12.5.2 Records 12-13
12.5.2.1 Lifetime Records 12-13
12.5.2.2 Five Year Records 12-14
12.6 Emergency Planning 12-14
12.7 Physical Security Plan 12-14
12.8 Quality Assurance 12-15
12.9 Conclusions 12-16

13 ACCIDENT ANALYSIS 13-1
13.1 Accident Analysis 13-1
13.2 Maximum Hypothetical Accident 13-2
13.3 Insertion of Excess Reactivity 13-4
13.4 Loss-of-Coolant Accident 13-7
13.4.1 Pumping of Water from the Reactor Tank 13-7
13.4.2 Reactor Tank Failure 13-7
13.4.3 Description of ECCS and Assumptions 13-9
13.4.4 Air Cooling 13-10
13.4.5 Assumptions Made for ECCS Operation 13-11
13.4.6 Performance of the ECCS 13-12
13.4.7 Results of ECCS Calculations 13-12
13.4.8 Ground Water Contamination 13-13
13.4.9 Radiation Levels from the Uncovered Core 13-16
13.5 Loss of Coolant Flow 13-19
13.6 Mishandling or Malfunction of Fuel 13-19
13.6.1 Fuel Loading Error 13-20
13.7 Experiment Malfunction (Accident Initiating Events and Scenarios) 13-21
13.8 External Events 13-23

13.9 Mishandling or Malfunction of Equipment 13-24
13.10 Conclusions 13-24

14 TECHNICAL SPECIFICATIONS 14-1
14.1 Summary 14-1
14.2 Conclusion 14-1

15 FINANCIAL QUALIFICATIONS 15-1

16 PRIOR UTILIZATION 16-1

17 CONCLUSIONS 17-1

18 REFERENCES 18-1

FIGURES

1.1 MNRC (Axonometric View) 1-10
1.2 McClellan Nuclear Radiation Center 1-11
2.1 McClellan Air Force Base - General Location Map 2-2
2.2 Map of McClellan Air Force Base 2-5
2.3 Foothills Fault System 2-9
3.1 Reactor 3-2
3.2 Rack-and-Pinion Control Rod Drive (Typical) 3-4
4.1 MNRC TRIGA Reactor 4-2
4.2 Fuel Element Assembly 4-4
4.3 MixJ Reference Core 4-9
4.4 20E Reference Core 4-10
4.5 30B Reference Core 4-11
4.6 Reactor Tank 4-13
4.7 Strength and Applied Stress as a Function of Temperature 4-19
5.1 Reactor Primary Cooling System 5-2
5.2 Purification and Makeup System 5-4
5.3 Reactor Secondary Cooling System 5-6
6.1 Emergency Core Cooling System 6-2
6.2 Reactor Room Air-Handling System 6-4
7.1 Block Diagram of Instrumentation and Control System 7-3
7.2 Typical Mode Control Panel 7-5
7.3 Typical Rod Control Panel 7-6
7.4 Rack-and-Pinion Control Rod Drive (Typical) 7-18
7.5 Adjustable Fast Transient Rod Drive Assembly 7-19
8.1 MNRC Electrical Distribution System - Single Line Diagram 8-3
9.1 Typical In-tank Fuel Storage Rack 9-2
9.2 Fuel Storage Pit/Rack 9-3
9.3 Auxiliary Makeup Water System 9-5
9.4 MNRC Fire Suppression System, Main Floor 9-7

9.5 MNRC Fire Suppression System, Second Floor 9-8
9.6 MNRC Air Handling System 9-9
10.1 Beam Tube Locations 10-3
10.2 In-Core Facilities 10-4
10.3 Pneumatic Transfer System 10-5
10.4 Experiment Review and Approval Process 10-6
11.1 Organizational Structure of the Radiation Protection Program Within MNRC 11-4
11.2 Concrete Biological Shield 11-6
11.3 Radiation Monitoring Equipment - Main Floor 11-18
11.4 Radiation Monitoring Equipment - Second Floor 11-19
12.1 McClellan Air Force Base Nuclear Operations Organization 12-2
12.2 McClellan Nuclear Radiation Center (MNRC) Organization 12-3
12.3 Nuclear Safety and Licensing Organization 12-4
13.1 Maximum and Average Fuel Temperature During Air Cooling Cycle for Various Spray Times 13-14

TABLES

4.1 Heat Transfer and Hydraulic Parameters for Operation at 2.0 MW and 2.3 MW with 101 Fuel Elements 4-17

7.1 Scram Window Display 7-7

7.2 Warning Window Display 7-8

7.3 Status Window Display 7-8

11.1 Concentrations of Ar-41 Released from the MNRC Stack under Different Atmospheric Conditions 11-9

11.2 Predominant Radionuclides and Their Projected Equilibrium Concentrations in the MNRC Reactor Primary Coolant at 2 MW 11-12

11.3 Radiation Monitoring and Related Equipment Used in the MNRC Radiation Protection Program 11-17

11.4 Typical Personnel Monitoring Devices Used at the MNRC 11-22

13.1 Radiation Doses in the MNRC Reactor Room After an MHA (Cladding Failure in Air) Accident 13-3

13.2 Radiation Doses to Members of the General Public Under the Most Conservative Atmospheric Conditions (Pasquill F) at Different Distances from the MNRC after a Fuel Element Cladding Failure in Air with No Decay (MHA) 13-3

13.3 Concentration of Radionuclides to Reach Ground Water 13-15

13.4 Dose Rates on the MNRC Reactor Top After a Loss of Pool Water Accident Following 2 MW Operations 13-17

13.5 Scattered Radiation Dose Rates in the MNRC Reactor Room After a Loss of Pool Water Accident Following 2 MW Operations 13-18

13.6 Scattered Radiation Dose Rates at the MNRC Facility Fence After a Loss of Pool Water Accident Following 2 MW Operations 13-18

13.7 Radiation Doses to Members of the General Public Under Different Atmospheric Conditions and at Different Distances from the MNRC Following Cladding Failure in Water 48 Hours after Reactor Shutdown 13-20

1 INTRODUCTION

1.1 Overview

The U.S. Air Force, McClellan Air Force Base (the applicant), acting for the McClellan Nuclear Radiation Center (MNRC or McClellan), submitted an application to the U.S. Nuclear Regulatory Commission (NRC) for a 20-year, Class 104c Facility Operating License (NRC Docket No. 50-607) by means of a letter and supporting documentation dated October 23, 1996, as supplemented on June 16, September 5, October 7, October 9, November 4, December 7, 1997, and July 16, 1998. These supplements provided additional information, but did not expand the scope of the application. This license would authorize the operation of the McClellan (TRIGA) research reactor as a NRC-licensed facility. Until recently, the applicant has been permitted to operate its TRIGA reactor under the conditions authorized by the U.S. Air Force in accordance with Section 91b of the Atomic Energy Act of 1954, as noted in Title 10 Part 50.11(a) of the *Code of Federal Regulations* (10 CFR Part 50.11(a)). Because of the impending closure of McClellan Air Force Base, the applicant has applied for an NRC license to continue operating the reactor.

Before issuing an NRC operating license, the staff conducted its review on the basis of information contained in the licensing application, supplemental information and applicant responses to staff requests for additional information (RAIs), and staff questions posed during visits to the site. Specifically, the application included financial statements, the safety analysis report (Ref.1), an environmental report, the applicant's operator requalification program, and proposed facility-specific technical specifications (TS). The applicant also requested that the staff consider the McClellan Emergency Plan and Physical Security Plan filed with the NRC as part of the application. The MNRC has continued to update these documents, both in response to RAIs issued by the staff and as part of their routine maintenance of the documents. Except for the McClellan Physical Security Plan, this material is available for review in the Commission's Public Document Room located at 2120 L Street, NW, Washington, D.C. 20037. The facility's security plan is protected from public disclosure under 10 CFR Part 2.790.

In conducting its safety review, the staff evaluated the facility against the requirements of 10 CFR Parts 20, 30, 50, 51, 55, 70, and 73; applicable regulatory guides (RGs); relevant

accepted industry standards, such as the American National Standards Institute/American Nuclear Society (ANSI/ANS) 15 series; and NRC guidance documents, such as NUREG-1537. Because there are no specific accident-related regulations for research reactors, the staff compared calculated dose values for accidents with the standards cited in 10 CFR Part 20. Amendments to 10 CFR Part 20 (paragraphs 20.1001 through 20.2402 and appendices) became effective on January 1, 1994. Among other items, these amendments changed the dose limits for occupationally exposed persons and members of the public, as well as the concentrations of radioactive material allowed in effluents released from licensed facilities. The applicant must follow the requirements of 10 CFR Part 20, as amended, for all McClellan reactor operations.

The purpose of this Safety Evaluation Report (SER) is to summarize the findings of the staff's safety review of the McClellan TRIGA reactor facility and to delineate the technical details considered in evaluating the radiological safety aspects of operation. This SER will serve as part of the bases for issuing an NRC license for operation of the McClellan TRIGA reactor at steady-state thermal power levels up to and including 2300 KW. Nominal power will be limited to 2 MW. The reactor can also be operated in a pulse mode with a pulse reactivity addition of $1.75.

This SER is divided into chapters that discuss the following topics:

- Chapter 1 contains a summary and conclusions regarding the principal safety considerations of the staff review, the history and general description of the reactor facility, information on shared facilities and equipment, comparison with similar facilities, and how the applicant complies with the Nuclear Waste Policy Act of 1982.

- Chapter 2 describes the site and applicable site characteristics, including geography, demography, meteorology, hydrology, geology, and interaction with nearby installations and facilities.

- Chapter 3 describes the design bases of facility structures, systems, and components and the responses to environmental factors at the reactor site.

- Chapter 4 describes the design bases and the functional characteristics of the reactor core and its components. In this chapter, the safety considerations and features of the reactor are discussed.

- Chapter 5 lists the design bases and describes the function of the reactor coolant and associated systems, including the primary and secondary coolant systems, and the coolant makeup and purification systems.

- Chapter 6 lists the design bases and describes the function of engineered safety features (ESFs) that may be required to mitigate consequences of postulated accidents at the facility.

- Chapter 7 lists the design bases and describes the function of instrumentation and control (I&C) systems and subsystems at the facility, placing emphasis on safety-related systems and safe reactor shutdown.

- Chapter 8 lists the design bases and describes the functions of normal and emergency electrical power systems at the facility.

- Chapter 9 lists the design bases and describes functions of auxiliary systems, such as fuel handling and storage, warning and communication, and fire protection.

- Chapter 10 lists the design bases and describes the functions of the experimental facilities. Non-power reactors are designed with irradiation capabilities for use in research, education, and technological development. This chapter discusses the characteristics of experiment and irradiation facilities on the basis of the experimental programs.

- Chapter 11 lists the design bases and describes the functions of the radiation protection and radioactive waste management programs at the facility. The description of the MNRC radiation protection program includes the health physics staffing and procedures,

monitoring programs for personnel exposures and effluent releases, and assessment and control of radiation doses both to workers and the public. The facility program for maintaining radiation exposures and releases as low as reasonably achievable (ALARA) is described in this chapter. The program for radioactive waste management is described, including the control and disposal of radiological waste from both reactor operations and experimental programs.

- Chapter 12 lists the bases and describes the functions of plans and procedures for the conduct of facility operations. These include discussions of the management structure, personnel training and evaluation, provisions for safety review and auditing of operations by the safety committee, and other required functions such as reporting, security, and emergency planning.

- Chapter 13 lists the bases, scenarios, and accident analyses at the reactor facility, and describes the maximum hypothetical accident, which is a fission product release from one fuel element in air. The radiological consequences from analyzed accidents to the facility staff and members of the public are discussed.

- Chapter 14 discusses the TSs, which state the operating limits and conditions and other requirements for the facility to ensure the protection of the health and safety of the public.

- Chapter 15 examines the financial qualifications of the applicant for continuing operations and decommissioning.

- Chapter 16 discusses previous reactor utilization.

- Chapter 17 summarizes the major conclusions of the staff's review of the McClellan license application.

- Chapter 18 contains references used during the staff's review.

This SER was prepared by Warren J. Eresian, Reactor Engineer, from the NRC's Office of Nuclear Reactor Regulation, Division of Reactor Program Management, Non-Power Reactors and Decommissioning Project Directorate. Other major contributors include Alexander Adams Jr., Senior Project Manager, of the NRC, and J. R. Miller and R. E. Carter of the Idaho National Engineering and Environmental Laboratory (INEEL) under contract to the NRC.

1.2 Summary and Conclusions Regarding the Principal Safety Considerations

As part of its evaluation, the staff considered information submitted by the applicant (including past operating history recorded in McClellan's various reports), as well as first-hand onsite observations. On the basis of this evaluation and the resolution of principal issues reviewed for the McClellan TRIGA reactor, the staff reached the following ten conclusions:

(1) The design, testing, and performance of the McClellan TRIGA reactor structure and the systems and components important to safety during normal operation were adequately planned, and safe operation of the facility is reasonably expected to continue.

(2) The MNRC's management organization is adequate to maintain and operate the reactor so that there is no significant radiological risk to facility employees or the public.

(3) The applicant's management organization, training, research activities, and security measures are adequate to ensure safe operation of the facility and protection of its special nuclear material.

(4) The applicant and the staff have considered the expected consequences of several postulated accidents emphasizing those likely to cause a loss of integrity of fuel-element cladding. The staff performed conservative analyses of the most serious, hypothetically credible accidents. As a result, the staff determined that the calculated potential radiation doses outside the reactor site are not likely to exceed the guidelines as specified by 10 CFR Part 20 for doses in unrestricted areas.

(5) Releases of radioactive materials and wastes from the facility are not expected to result in concentrations beyond the limits specified by the Commission's regulations and are ALARA.

(6) The applicant's TSs, which state the operational control limits of the facility, give a high degree of assurance that the facility will be operated in accordance with the assumptions and analyses in the safety analysis report (SAR). There has been no significant degradation of equipment, and the TSs will continue to ensure that there will be no significant degradation of equipment.

(7) The financial data submitted with the application show that the applicant has reasonable access to sufficient revenues to cover operating costs and eventually to decommission the reactor facility.

(8) The applicant's program for physically protecting the facility and its special nuclear materials (SNM) complies with the requirements of 10 CFR Part 73.

(9) The applicant's procedures for training its reactor operators and the plan for operator requalification are adequate; they give reasonable assurance that the reactor will be operated in a competent manner.

(10) The applicant's emergency plan provides reasonable assurance that the applicant is prepared to assess and respond to emergency events.

On the basis of these findings, the staff concludes that the U.S. Air Force, McClellan AFB can operate its TRIGA reactor in accordance with its application without endangering the health and safety of the public.

1.3 History

The McClellan AFB TRIGA reactor was originally designed and constructed to perform neutron radiography and irradiation services for the U.S. Air Force and for other assigned tasks. The first application (to the U.S. Air Force) to construct the TRIGA reactor was made in August 1987, and actual construction began the following month. The U.S. Air Force issued its

authorization to operate the reactor on January 19, 1990, and initial criticality followed immediately on January 20, 1990. Operation at 1 MW began a few days later on January 25, 1990, with power being increased to 2 MW in April 1997. During 1997, construction began on another facility that will provide a neutron beam for tomography and boron neutron capture therapy (BNCT).

McClellan AFB is scheduled to be closed in the year 2002, and the Air Force is seeking to divest itself of the reactor. The NRC licensing of the MNRC is necessary to increase the possibility that other entities, either universities or private companies, will find it attractive to own and operate the reactor facility. The Air Force will retain decommissioning liability when, and if, the license is transferred to another licensee.

1.4 Reactor Description

The McClellan TRIGA is a heterogeneous, tank-type reactor. The core is immersed in highly purified water in an open aluminum tank that holds approximately 7000 gallons (26,500 L) of water. The tank is surrounded by concrete. The core is cooled by natural convection flow. The coolant/moderator is light water, and the reactor core is reflected by light water or graphite. The reactor coolant is circulated through an external heat removal and purification system. The reactor facility includes the space next to the reactor core, a pneumatic transfer system, beam tubes, irradiation bays for larger material, and a new exposure window intended to facilitate BNCT activities.

The McClellan fuel design is similar to that used by other NRC-licensed TRIGA reactors, except that the top and bottom end fittings were modified to enhance coolant flow. The uranium is enriched to less than 20 percent in the U-235 isotope. The reactor exhibits a large prompt negative temperature coefficient typical of all TRIGAs. Reactivity is controlled by six control rods.

1.5 Facilities and Equipment

The McClellan TRIGA reactor building contains the reactor bay, five irradiation bays, the reactor control room, and all piping areas. Offices for reactor personnel and others associated with the reactor program are in the reactor building and adjoining buildings. The McClellan AFB

provides the reactor building with electricity, water, and heating. Air from the reactor building is exhausted through a stack to the unrestricted environment. An axonometric view of the MNRC reactor complex is shown in Figure 1.1. There are no shared facilities or equipment related to the operation of the MNRC reactor. A cutaway view of the MNRC is shown in Figure 1.2.

1.6 Comparison with Similar Facilities

The McClellan TRIGA reactor is similar to 19 other TRIGA research reactors licensed to operate by the NRC. The instruments and controls are similar to the newer non-power TRIGA reactors licensed by the NRC.

1.7 Nuclear Waste Policy Act of 1982

Section 302(1)(B) of the Nuclear Waste Policy Act of 1982 specifies that the NRC may require, as a precondition to issuing or renewing an operating license for a research or test reactor, that the applicant shall have entered an agreement with the U.S. Department of Energy (DOE) for the disposal of high-level radioactive wastes and spent nuclear fuel. In a letter dated May 3, 1983, R. L. Morgan, DOE, informed H. Denton, NRC, that DOE had determined that universities and other government agencies operating non-power reactors have entered into contracts with the DOE, providing that DOE retains title to the fuel and is obligated to take the spent fuel and/or high-level waste for storage or reprocessing. By entering into such a contract with the DOE, the U.S. Air Force has satisfied the requirements of the Waste Policy Act of 1982 as they apply to the McClellan TRIGA reactor.

1.8 Conclusions

On the basis of an evaluation of the information presented in the applicant's SAR, the staff concludes as follows:

- The applicant has compared the design bases and safety considerations of the MNRC facility with those non-power reactors using similar fuel type, thermal power level, and siting considerations. The history of these facilities shows consistently safe operation that is acceptable to the staff.

- The applicant's design does not differ in any substantive way from similar facilities that have been found acceptable to the NRC, and thus should be expected to perform in a similar manner.

- The applicant has used test data from similar reactor facilities in designing components. The applicant cited the actual facilities in association with the components. These data provide assurance that the facility can operate safely as designed.

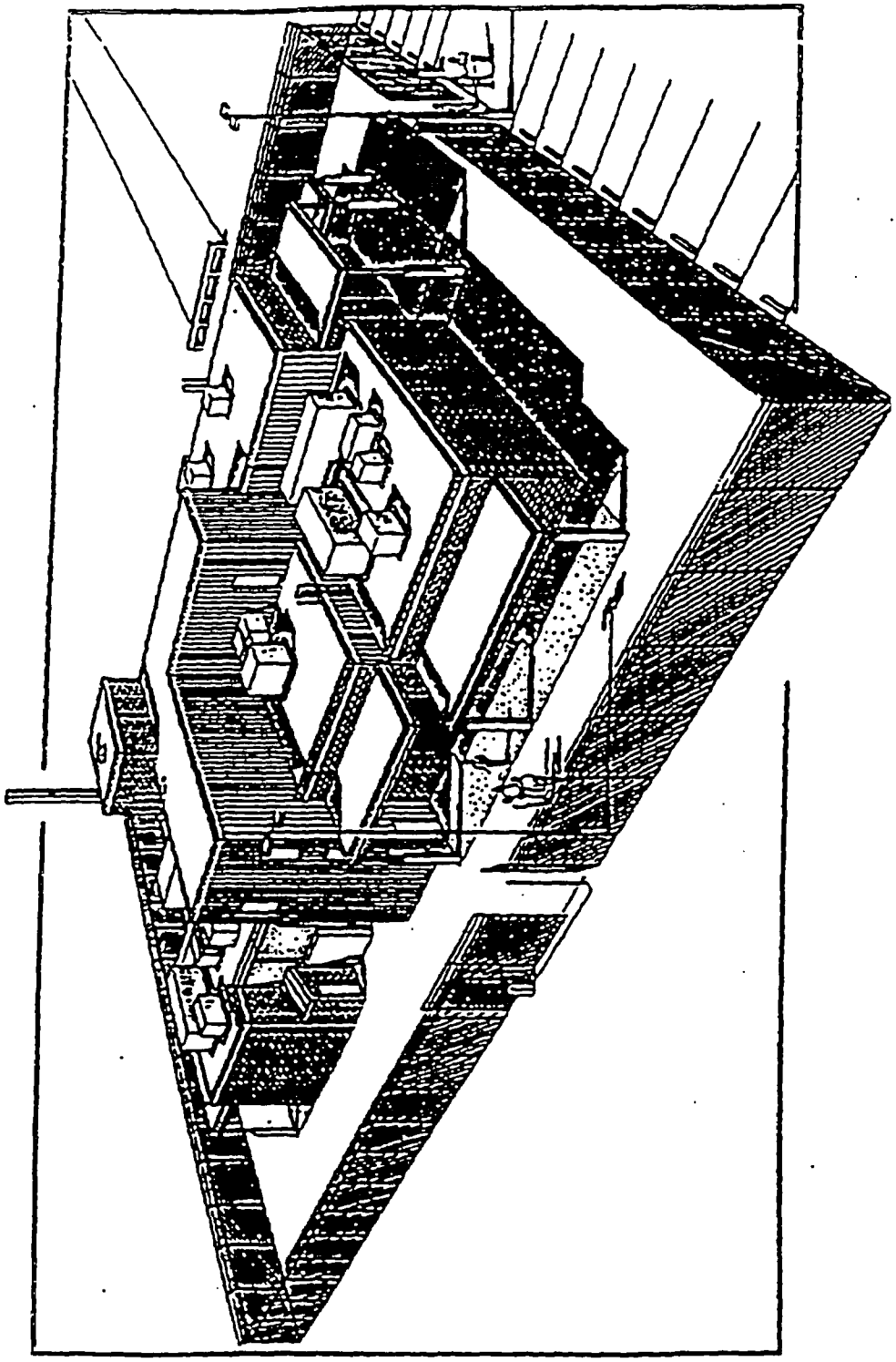

Figure 1.1

MNRC (Axonometric View)

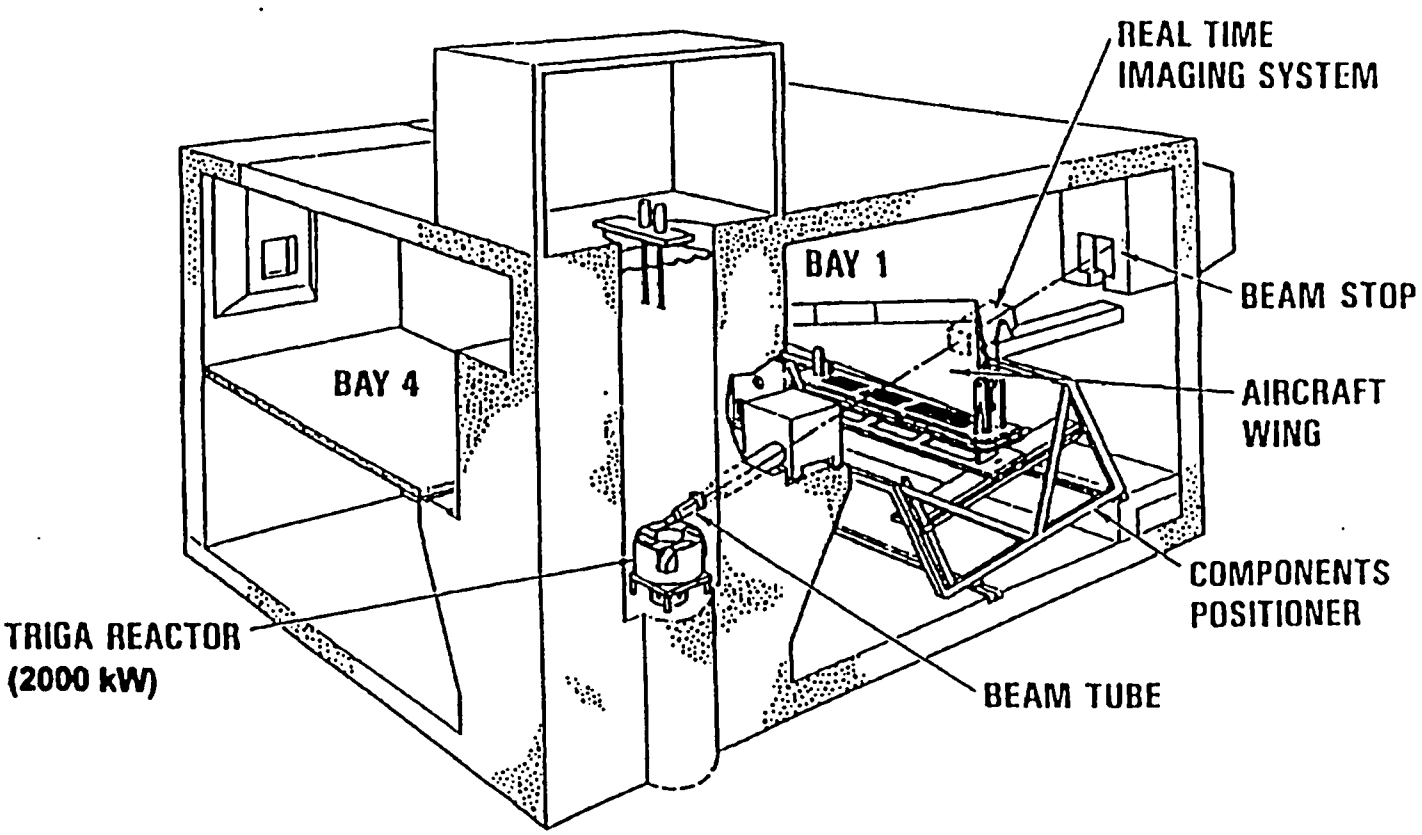

Figure 1.2

McClellan Nuclear Radiation Center

2 SITE CHARACTERISTICS

2.1 Reactor Site

The McClellan TRIGA reactor is in the McClellan Nuclear Radiation Center building on the property of the McClellan AFB, about 13 km (8 miles) northeast of downtown Sacramento, California. The area is composed primarily of residential communities with some small businesses. Sacramento is in the Central Valley of California, between the coastal and the Sierra Nevada ranges. The elevation ranges from 15.2 m (50 ft) to 22.8 m (75 ft) above mean sea level. The McClellan AFB consists of about 1050 hectares (2600 acres) of government-owned and -controlled land. The general site location is shown in Figure 2.1.

2.2 Demography

The area within 13 km (8 mi) of McClellan AFB supports a population that, to the southwest, includes downtown Sacramento. Metropolitan Sacramento has a population of about 1,093,000 (1992-census), an increase of about 26 percent since 1970. The major population center lays south-by-southwest of the base. The population of McClellan AFB is approximately 7500.

McClellan AFB is surrounded by several smaller communities. To the east and northeast is North Highlands; to the northwest is Rio Linda; to the southwest is the city of Sacramento; and to the south is Arden-Arcade. The highest density developments are directly to the east, in North Highlands; to the southwest, in the Del Paso Heights area of the city of Sacramento, and to the south, in Sacramento County.

No significant population variations as a result of transient population or transient land use occur in the area surrounding the base. Although there are some recreational areas within 16 km (10 mi) of the base, none attract many people and most are used by local residents.

2.3 Nearby Industrial, Transportation, and Military Facilities

Major industrial, transportation, and military facilities near the MNRC TRIGA site are addressed in the following sections.

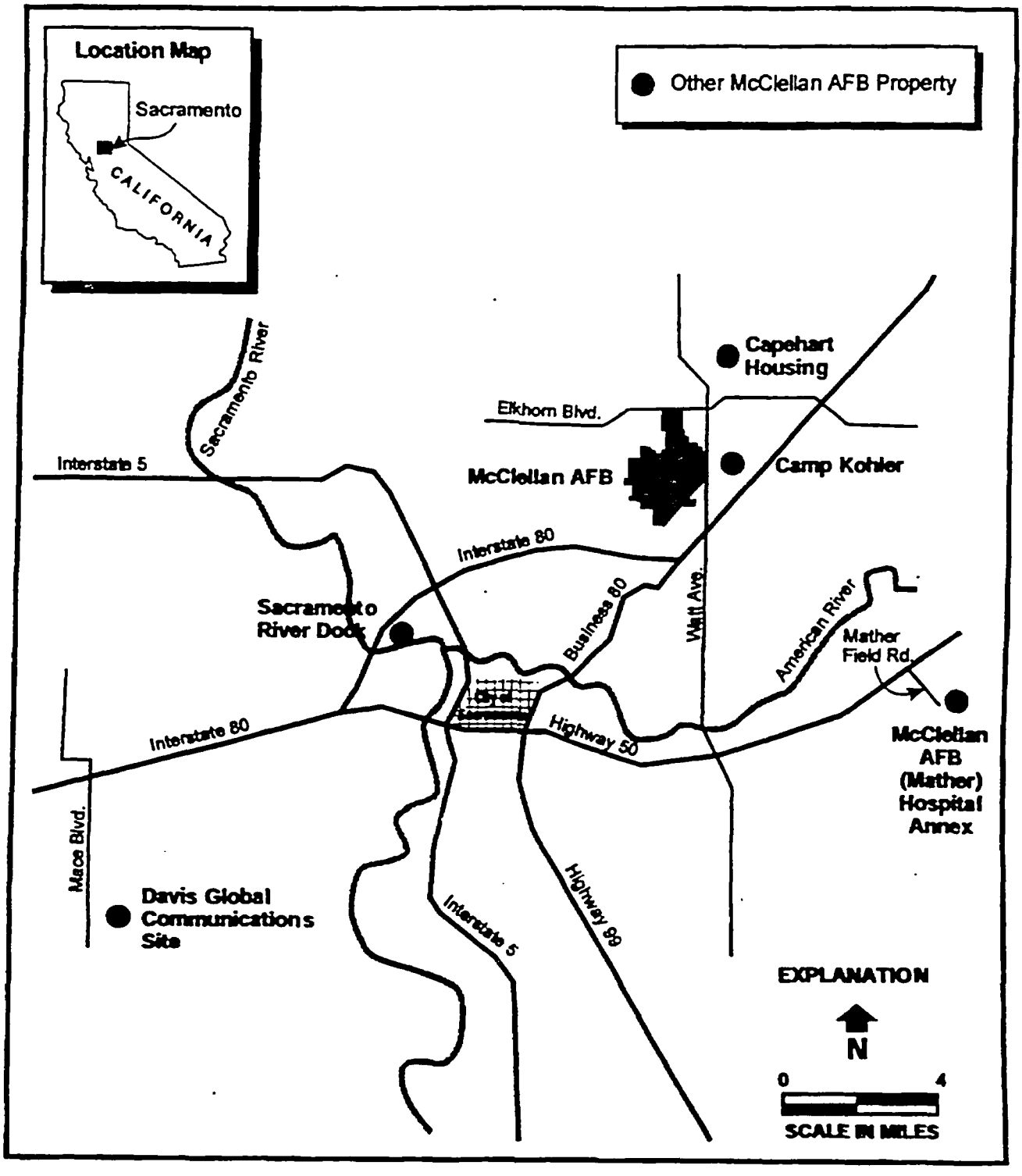

Figure 2.1
McClellan Air Force Base - General Location Map

2.3.1 Industry

There are no major industrial facilities in the Sacramento area. The primary drivers of the local economy are agriculture and government, with much smaller contributions made by mining, manufacturing of durable goods, lumber and wood products, and metal fabrication. The closest oil refinery is at Martinez, California, approximately 137 km (85 mi) to the southwest.

2.3.2 Transportation

This section includes information on major highway systems, airports, water transportation, and rail transportation:

- Highway Transportation. The Sacramento area is at the crossroads of two interstate highways (I-80 and I-5). I-80 leads to San Francisco (west) and Reno (east), and I-5 is a major north-south route. McClellan's three main gates are on Watt Avenue, about a mile north of the I-80/Watt Avenue intersection.

- Airports. There are 71 airports within the Sacramento Area Council of Governments (SACOG), the entity by which records are kept. Of those, 16 are public, 53 are private, and two (including McClellan AFB) are military. In the future, aircraft runways at the McClellan AFB site will involve military and/or commercial traffic only at a level projected to be less than the current military usage. Other private landing strips are used so infrequently that no records are maintained for them.

- Water Transportation. Sacramento has the largest river system in California. The ship channel between Rio Vista and Sacramento, which was dredged by the Army Corps of Engineers, follows a previously existing lake. The resulting Port of Sacramento, operated by the Sacramento-Yolo Port authority, lies 146 km (79 nautical mi) from the Pacific Ocean and approximately 18 km (11 mi) from McClellan AFB. Because of the distance from the port, shipping accidents are not expected to affect the McClellan reactor.

- Rail Transportation. Union Pacific operates the tracks that parallel Roseville Road and along the southeast corner of McClellan AFB. The closest approach to the reactor facility is approximately 1064 m (3500 ft). Union Pacific connects Sacramento with 21

western, central, and southern states. Nine AMTRACK passenger trains and 14 freight trains make daily, scheduled use of the tracks just southeast of the reactor. All shipments aboard these trains meet requirements stipulated in Title 49 of the *Code of Federal Regulations* (Transportation). Normal rail shipments are not expected to threaten the reactor facilities. The California State Office of Emergency Services has listed the MNRC as a critical facility to be notified whenever plans are being developed that involve hazardous material shipments along this route.

2.3.3 Military Facilities

There are two military facilities near Sacramento; (1) Beale AFB and (2) McClellan AFB. Beale AFB is in Yuba County, approximately 21 km (13 mi) east of Marysville and 121 km (75 mi) from McClellan AFB.

McClellan AFB has one active runway (3230 m [10,600 ft] long and 60 m [200 ft] wide) constructed of concrete. The runway has a 335-m (1100-ft) asphalt overrun at the south end and a 300-m (1000-ft) overrun at the north end. (Figure 2.2 shows the relationship of this runway to the MNRC.) The Air Force maintains a 300-m (1000-ft) safety zone to each side of the runway centerline, 900 × 900-m (3000 × 3000-ft) clear zones at the ends of the runway, a 60-m (200-ft) safety zone from the center of each taxiway, and a 38-m (125-ft) minimum safety zone from the outer boundary of each apron. Hazardous cargo pads are located at the base, with a 380-m (1250-ft) required safety distance between hazardous cargos and inhabited structures. MNRC is about 500 m (1800 ft) east of this active runway. Because the McClellan reactor is along side an active runway, air traffic that could cause potential accidents affecting the McClellan TRIGA reactor is addressed in the SAR, and the probability of such an accident was calculated at 5×10^{-8} per reactor year. The staff performed its own calculation on the basis of DOE-STD-3014-96 (Ref. 2) and concurred with the applicant's probability values, if McClellan AFB is not used for general aviation aircraft. This will be discussed in further detail in Chapter 13. Navigational aids include high-intensity runway lights, high-intensity approach lighting, visual approach slope indicator (VASI) lights, solid-state instrument landing system (SSILS), area surveillance radar (ASR), very high frequency (VHF) omni-range and tactical navigation station (VORTAC), and ultra high frequency (UHF) transmitters and receivers.

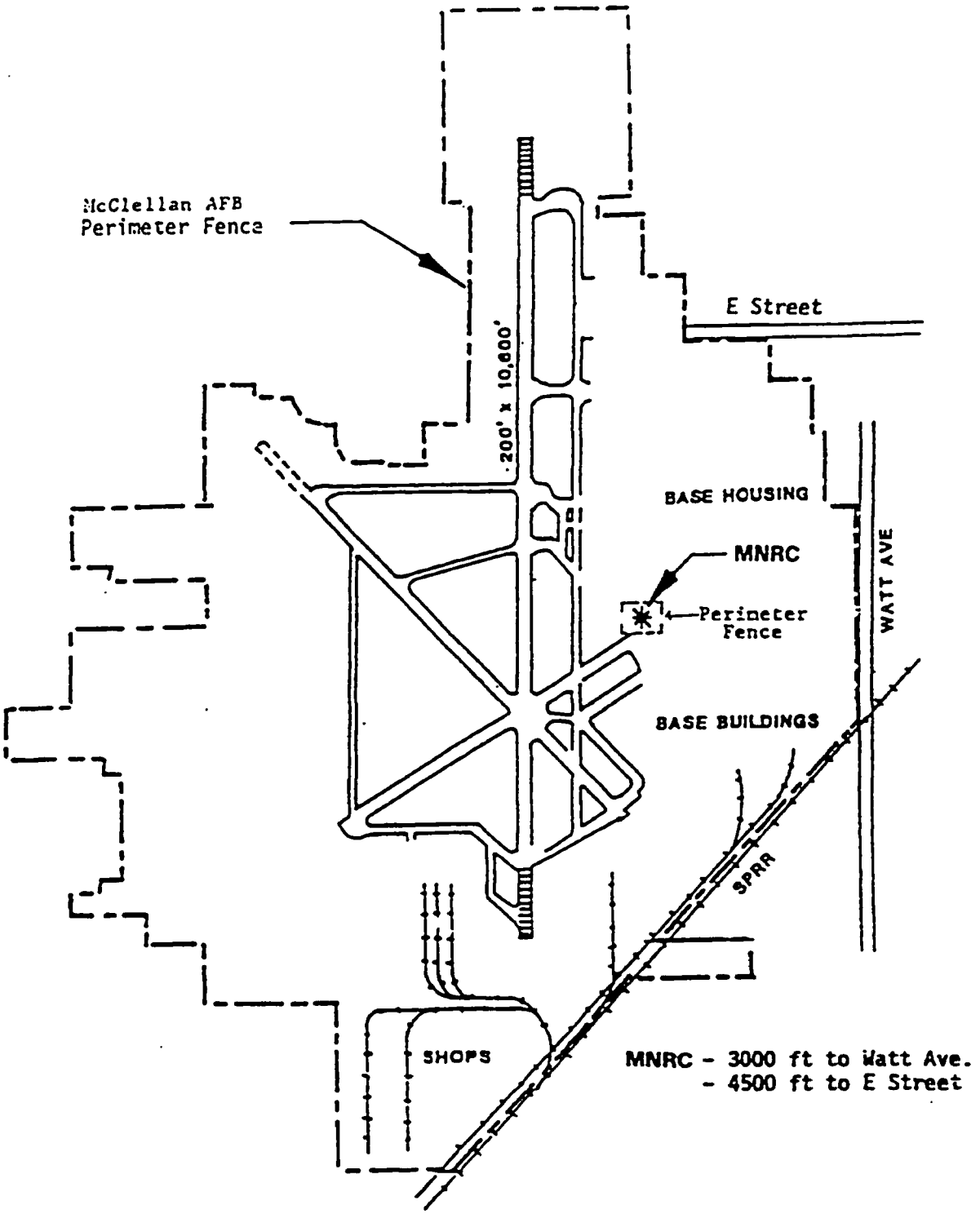

Figure 2.2

Map of McClellan Air Force Base

2.4 Climatology and Meteorology

The climatology of the MNRC TRIGA reactor site is described in the following sections. These discussions include data on precipitation, winds, temperature, and severe weather.

2.4.1 Climatology

Sacramento is in California's Central Valley between the Coastal and Sierra Nevada ranges. The area is characterized by hot summers (July's mean maximum temperature is 40.5°C [105°F]) and cold winters (January's mean minimum temperature is -2.2°C [28°F]). As elsewhere in California, most of the annual average precipitation (about 43 cm [17 in]) falls during the winter months as rain. Prevailing winds in the area are from the south to south-by-southeast.

The easternmost mountain chains form a barrier that protects much of California against extremely cold air from the Great Basin in the winter. Occasionally, cold air from an extensive high-pressure area spreads westward and southward over California. Even in these cases, warming by compression caused by air flowing down the slopes of the mountains into the valleys prevents severe cold damage. The mountain ranges to the west offer some protection to the interior from the strong flow of air off the Pacific Ocean.

2.4.2 Temperature and Wind Variability

Normal temperatures for the Sacramento area are categorized as "climatological standard normal" (1931-60). The normal daily minimum temperature (2.88°C [37.2°F]) occurs in January and the normal daily maximum temperature (34.11°C [93.4°F]) occurs in July. Extreme temperatures have ranged from a low of -5°C (23°F) in January 1963 to as high as 46.11°C (115°F) in June 1961.

The annual wind rose for the Sacramento area is taken from data collected for the periods 1969-70 and 1973-80. The prevailing winds in the area are from the south to south-by-southeast. (According to records of the National Oceanographic and Atmospheric Administration, U.S. Department of Commerce, Volume II, "Climates of the States" – specific site data is from the Sacramento Executive Airport.)

2.4.3 Precipitation and Humidity

Normal precipitation for the Sacramento area is 41.38 cm/yr (16.29 in/yr), with the highest amounts (approximately 8.128 cm [3.2 in]) occurring in the months of December and January. The maximum monthly rainfall (32.106 cm [12.64 in]) fell in December 1955. The maximum rainfall over a 24-hour period (14.199 cm [5.59 in]) inches, occurred in October 1962. Humidities in the Sacramento area range from a low of 28 percent in July to a high of 91 percent in December and January.

2.4.4 Severe Weather

Tornadoes have been reported in California (an average of 1-2 per year). However, they are infrequent in the Sacramento area and generally are not severe, causing only minor damage to trees or poorly constructed buildings. NRC RG 1.76 defines the Sacramento area as in the zone of the lowest intensity (Zone III); therefore, the MNRC reactor's seismic design basis (Uniform Building Code, Zone III, importance factor of 1.5) is more than adequate to protect the installation against tornadoes. Because of the interworking relationships between MNRC and the McClellan AFB, notification of severe weather conditions is routine.

2.5 Geology, Seismology, and Geotechnical Engineering

Geological, seismological, and geotechnical engineering considerations are discussed in the following sections.

2.5.1 Regional Geology and Seismicity

McClellan AFB is in a region called the Great Valley of California. This region is bordered on the west by the Coast Ranges and on the east by the Sierra Nevada Mountains. Crystalline granitic and metamorphic rocks comprise the core of the Sierra Nevada and form the basement underlying the sediments along the eastern half of the Great Valley. The western part of the Great Valley basement consists of oceanic crust (gabbro and serpentine). The crustal boundary between these two basement complexes is a buried zone of shearing called the Willows fault that is approximately 1.6 km (1 mile) west of McClellan AFB. This fault is not considered active since seismic reflection data show that the most recent slip on this fault occurred about 20 million years ago. To the west, the Great Valley and the Coast Ranges are structurally separated by the Coast Range-Sierra Nevada boundary zone. This zone is marked locally at the surface by young anticlinal folds. The Dunnigan Hills, located approximately 40

km (25 miles) west of McClellan AFB, is the closest surface expression of this feature. Two earthquakes, estimated as having magnitudes greater than 6, occurred in this region during 1892. On the east, the Great Valley is bordered by the Sierran foothills. The 1975 M 5.7 Oroville earthquake occurred on the Cleveland Hill fault, 80 km (50 miles) north of McClellan AFB, in a region known as the Foothills Fault System. This fault system, which parallels the Sierran Foothills, is approximately 29 km (18 miles) east of McClellan AFB at its closest distance. Figure 2.3 shows an outline of the Foothills Fault System in addition to the locations of historic (1800-1911) and more recent (through 1997) earthquakes within a 200-km (125-mile) radius surrounding McClellan AFB.

2.5.2 Site Geology

McClellan AFB is underlain by a thick (>300 m [1000 feet]) section of semiconsolidated sediments deposited by streams draining from the Sierra Nevada mountains. The uppermost deposits are termed the Victor Formation and are approximately 15 to 30 m (50 to 100 feet) thick. The Victor Formation is composed of heterogeneous shifting stream beds that drained the Sierra Nevada during the Pleistocene epoch. These streams left sand and gravel in channel-like structures that grade laterally and vertically into silt and clay. Underlying these sediments is a volcanic unit termed the Mehtren Formation. This formation is composed of fluvial deposits derived from andesitic detritus that washed down the slopes of the Sierra Nevada mountains. The thickness of the Mehten formation near McClellan AFB is unknown, but probably exceeds 90 m (300 feet).

2.5.3 Maximum Earthquake Potential

The historical earthquake that probably produced the most intense ground shaking in the Sacramento region is the Vacaville-Winters earthquake of April 1892, which had an estimated magnitude of about 6.5. The location of this earthquake, on the basis of felt reports, is in the Vacaville-Winters-Dixon area (see Figure 2.3) The Working Group on Northern California Earthquake Potential has assigned a potential magnitude of 6.6 to this Great Valley fault with a 540-year recurrence time. For the Foothills Fault System to the east, this same report estimates a maximum potential magnitude of about 6.5 and a very large recurrence time of 12,500 years. Finally, within the 200-km (125-mile) radius surrounding McClellan AFB, the

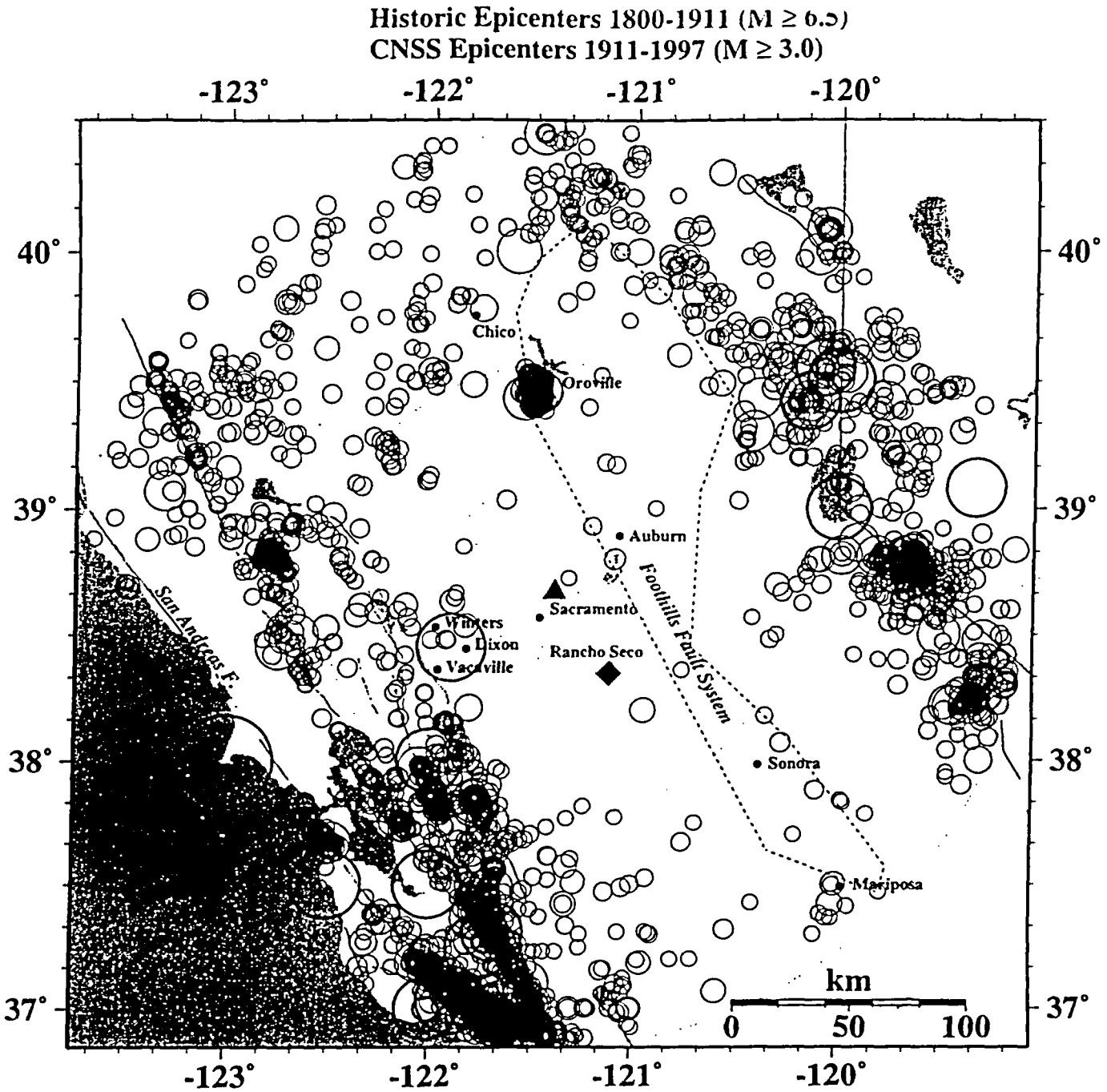

Magnitude

3 4 5 6

Notable Earthquakes

1836 Oakland	6.7	1892 Vacaville, CA	6.5
1838 San Francisco Pen.	7.0	1906 San Francisco	7.9
1860 Carson City, NV	6.5	1911 Morgan Hill	6.6
1865 Santa Cruz Mts.	6.5	1933 Wabuska, NV	6.1
1868 Hayward	7.0	1948 Verdi, NV	6.0
1869 Olinghouse F., NV	6.7	1966 Boca, CA	6.0
1887 Carson City, NV	6.5	1984 Morgan Hill	6.2
		1989 Loma Prieta	7.0

Figure 2.3

Foothills Fault System

largest predicted earthquake is a magnitude 8, 1906-type event on the San Andreas Fault. However, damaging ground motion from this scenario is not likely at McClellan AFB since the closest distance of this fault is about 130 km (80 miles).

2.5.4 Vibratory Ground Motion

For the three scenario events described in the preceding section, median ground level accelerations at McClellan AFB were estimated, taking into account their size and location. The median acceleration was approximately 0.25 g. The California Division of Mines and Geology has estimated that the annual probabilities of exceedance for ground motion accelerations near 0.25 g at McClellan AFB range from about $3x10^{-4}$ to $3x10^{-3}$. These low annual probabilities reflect the very large recurrence times for the potential seismic sources near McClellan AFB.

2.5.5 Surface Faulting

The most recent geologic map of the Great Valley region shows that the Willows fault, at its closest approach, lies about 1.6 km (1 mile) west of the western boundary of McClellan AFB. As previously stated, the most recent slip on the Willows fault, near McClellan AFB, is about 20 million years old. Therefore, the Willows fault does not pose a significant faulting hazard.

2.5.6 Liquefaction Potential

The liquefaction potential for McClellan AFB was determined by using the Standard Penetration Test Blow Count method and the Seed-Idriss simplified analysis procedure. For this procedure, a peak ground acceleration of 0.2 g and a magnitude of 7 was assumed. Of the 45 investigations, 5 showed blow counts below the critical line over the depth range from 0.6 to 2.7 m (2 to 9 feet). These five boreholes are randomly located about McClellan AFB indicating that the existence of a thick or continuous weak soil layer is not likely. In addition, none of these five sites are near the reactor tank.

2.6 Hydrology

Soil in the area of the McClellan reactor is about 1.2 m (4 ft) thick, with a sandy loam that is moderately permeable. Groundwater tables are at depths ranging from 24 m to 30 m (80 to 100 feet) below ground surface. The soil has a moderate water-holding capacity. Surface drainage around the site is directed toward storm sewers via shallow ditches and swales. Runoff is directed toward the East Natomas Main Drainage Canal and carried to the

Sacramento River about 8 km (5 mi) west of the McClellan site. The MNRC reactor design should ensure that any contaminated water, including water from the reactor tank, will be contained within the facility. Chapter 13 of this document discusses containment and monitoring of water within the MNRC.

2.7 Conclusions

On the basis of its evaluation of the information presented in the applicant's SAR, supplemental information received and site visits, the staff concludes as follows:

- The applicant has provided sufficient information to accurately describe the geography and demography surrounding the MNRC reactor, and the information is sufficient to assess the radiological impact resulting from the location and operation of the reactor. There is reasonable assurance that no geographic or demographic features will render the site unsuitable for continued operation of the reactor.

- The applicant has discussed nearby manmade facilities and activities (i.e., industrial, transportation, and military) that have a potential to pose a hazard to reactor operations. There is reasonable assurance that operation of these facilities will not affect reactor operation.

- Meteorological history and projections were factored into the design of the reactor building, such that no weather-related event is likely to cause damage to the reactor and a release of radioactive material. The meteorological information is sufficient to evaluate dispersion calculations and calculate the consequences of releases from postulated accidents.

- Information on the geologic features and the potential seismic activity at the MNRC site was provided in sufficient detail and in a form to be integrated acceptably into the design bases for structures, systems, and operating characteristics of the reactor.

- Information in the McClellan SAR shows that damaging seismic activity at the reactor site during the term of the license is very unlikely. Furthermore, if seismic activity were

to occur, any radiologic consequences are bounded as analyzed in Chapter 13 of the SAR.

- The McClellan SAR shows that there is no significant likelihood that the public would be subject to undue radiological risk from seismic activity; therefore, the site is suitable for the proposed reactor.

3 DESIGN OF STRUCTURES, SYSTEMS, AND COMPONENTS

3.1 Description of the Reactor Facility

The McClellan TRIGA reactor is in a separate building within the MNRC complex (Figure 1.1). The reactor building was designed and built to meet or exceed contemporary building code requirements. The building is a three-level, rectangular structure housing the reactor. This facility provides space, shielding, and environmental control for radiography and irradiation services.

The ground-level elements of the reactor building are constructed of reinforced concrete and concrete-block masonry. The upper portions of the reactor building exterior walls are painted metal panels, concrete, and concrete-block masonry walls. The exterior walls of the radiography bays are made of reinforced concrete and vary in thickness from 0.608 m (2 ft) to 0.912 m (3 ft), whereas interior walls and roofs are constructed of reinforced concrete that is 0.608 m (2 ft) thick. The reactor room is above the radiography bays. The reactor room walls are constructed of standard filled and reinforced-concrete block, with a typical metal-deck, built-up roof.

The reactor is located in a cylindrical, aluminum-walled tank (Figure 3.1) with the core positioned approximately 1.368 m (4.5 ft) below grade (i.e., the tank bottom is approximately 1.976 m [6.5 ft] below grade). The reactor tank is surrounded by a monolithic block of reinforced concrete. Below ground level, the concrete is approximately 3.344 m (11 ft) thick. Above ground level, the concrete varies in thickness from approximately 0.988 m (3.25 ft) to 3.04 m (10 ft), with the smaller dimensions found at the top of the tank. The tank and shield structure are supported by a concrete pad approximately 2.888 m (9.5 ft) thick.

The basic purpose of these massive concrete structures is to provide biological shielding for personnel working in and around the MNRC. These massive structures also provide excellent protection for the reactor core against external man made and natural phenomena.

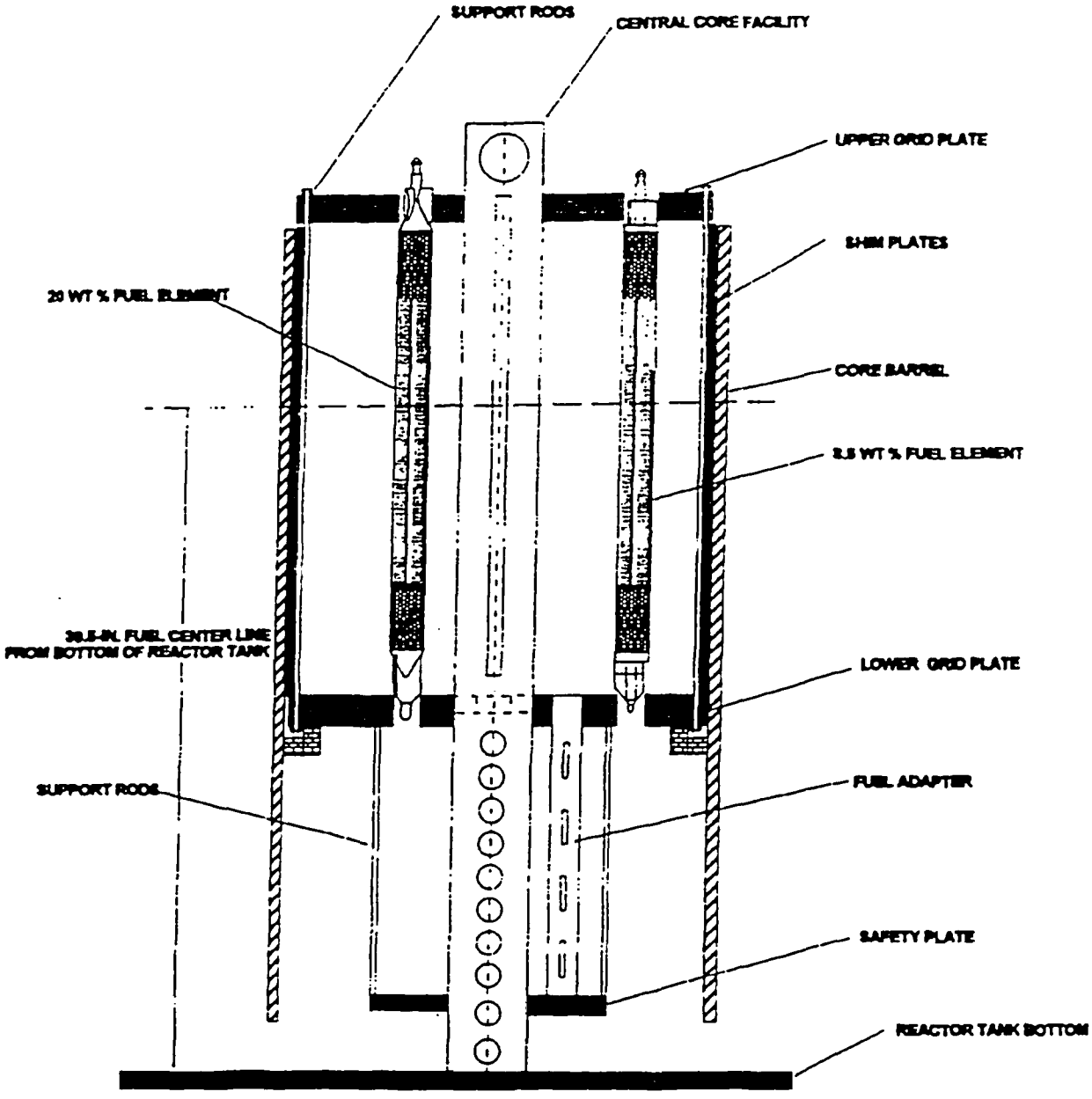

Figure 3.1
Reactor

3.2 Mechanical Systems and Components

The neutron-absorbing control rods (Figure 3.2) suspended from the superstructure are designated as mechanical systems important to safety. The motors, electromagnets, gear boxes, switches, and wiring are all above the tank water level and are readily accessible for visual inspection, testing, and maintenance. The control rod extensions (between the actual rod and the electromagnet) were observed to have a slight vibration and there is an audible component of the vibration. During a site visit the staff discussed this with the applicant and with the TRIGA vendor, General Atomics (GA). The vibration and noise have been observed at other TRIGA reactors starting at power levels of between 1 and 1.5 MW. Research indicates that this phenomenon is attributed to standing waves created by the rising water after passing through the core and is probably accentuated by restriction to the coolant flow through the upper grid plate (Ref. 11). However, core inlet temperature is not compromised. No deleterious effects have been observed by the applicant from this vibration. The applicant will continue to monitor the reactor components, especially the control rod extensions, in accordance with the surveillance requirements of the TS. The applicant has a preventive maintenance program in place to ensure that all mechanical systems and components important to safety will continue to meet the performance requirements of the TSs.

3.3 General Design Criteria

Although there is no regulatory requirement, the applicant has compared the design criteria of the MNRC Reactor to the "General Design Criteria for Nuclear Power Plants," 10 CFR Part 50, Appendix A, as appropriate to a TRIGA research reactor.

The Sacramento area is classified as being in Seismic Zone 3 as defined in the Uniform Building Code (UBC). The MNRC structures were designed and constructed in accordance with this code. Seismic activity in the region has registered as high as Richter 6.0-6.5 in historical time that indicates an upper limit on the most likely seismic events. Since the MNRC is designed to the UBC for Zone 3 with an importance factor of 1.5, there is ample conservatism in the design for the maximum expected event. The MNRC structures may suffer some damage from a seismic event of the highest possible yield, but the resultant radiological doses would be within the ranges evaluated in Chapter 13, Accident Analysis.

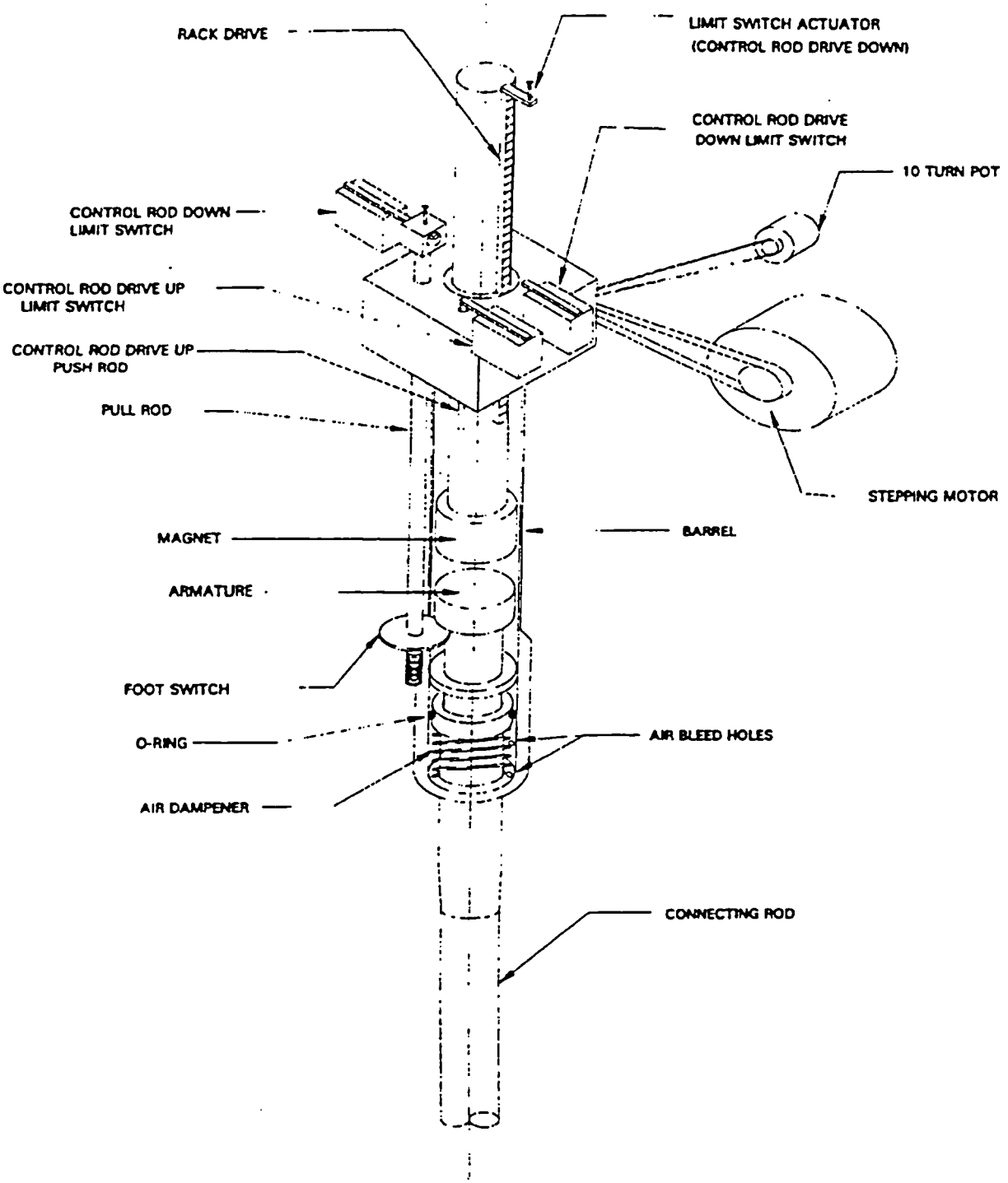

Figure 3.2

Rack-and-Pinion Control Rod Drive (Typical)

The McClellan AFB area experiences few extreme wind conditions such as tornados. Furthermore, the reactor building is constructed to meet the UBC and the reactor is surrounded by a massive concrete biological shield. The reactor site is located well above any flood plains. Therefore, wind or water damage to the MNRC is very unlikely.

3.4 Conclusions

On the basis of an evaluation of the information presented in the applicant's SAR, the staff concludes as follows:

- The design bases of the electromechanical systems and components give reasonable assurance that facility systems and components will function as designed to ensure safe operation and safe shutdown of the reactor.

- Surveillance activities proposed in the TSs acceptably ensure that the safety-related functions of the applicant's electromechanical systems and components will be operable and that the health and safety of the public will be protected.

- The design and construction of structures, systems, and components against natural phenomena are adequate to ensure the health and safety of the public.

- The vibration of the control rod drives will not affect the safe-shutdown capability of the reactor.

4 REACTOR

4.1 Introduction

The McClellan TRIGA reactor is a fixed-core, pool-type research reactor that uses light water as the moderator, coolant, and shield. The reactor is authorized by the U.S. Air Force to operate in the steady-state mode at thermal power levels up to and including 2 MW. The applicant has requested a license from the NRC to continue steady-state operations at a nominal 2 MW level, as specified in the TSs, with a maximum licensed power of 2.3 MW permitted for testing of the reactor steady-state power level scram. The licensed maximum power (2.3 MW) was used by the applicant and the staff to evaluate thermal-hydraulic aspects of operation. In addition, pulse and square-wave modes of operation were proposed with a maximum reactivity addition of $1.75 for the pulse mode and $0.90 for the square wave mode.

The reactor core is immersed in a reinforced concrete, water-filled, open pool. The pool is spanned by a fixed structure that supports the control rod systems, reactor instrumentation, and some experimental facilities. The core itself is located near the bottom of the pool, where it is supported on a structure that rests on the pool floor. The reactor uses standard TRIGA low enriched fuel with stainless steel cladding.

Reactor control is achieved by inserting or withdrawing up to six neutron-absorbing control rods suspended from the drive mechanisms. Heat generated by fission is transferred from the fuel to pool water. The pool water is circulated by the primary cooling system through a heat exchanger in which the heat is transferred to the secondary system and released to the environment by the cooling tower. The I&C system for the McClellan reactor is a computer-based design incorporating a multifunction microprocessor-based neutron monitor channel developed by GA and an analog-type neutron monitoring channel.

4.2 Reactor Core

The MNRC TRIGA reactor core (Figure 4.1) consists of the fuel-moderator assemblies (including the instrumented element), reflector assemblies, grid plates, safety plate, neutron source, graphite elements, control rods, experimental facilities, and beam tubes. Three bounding reference reactor cores are analyzed by the applicant.

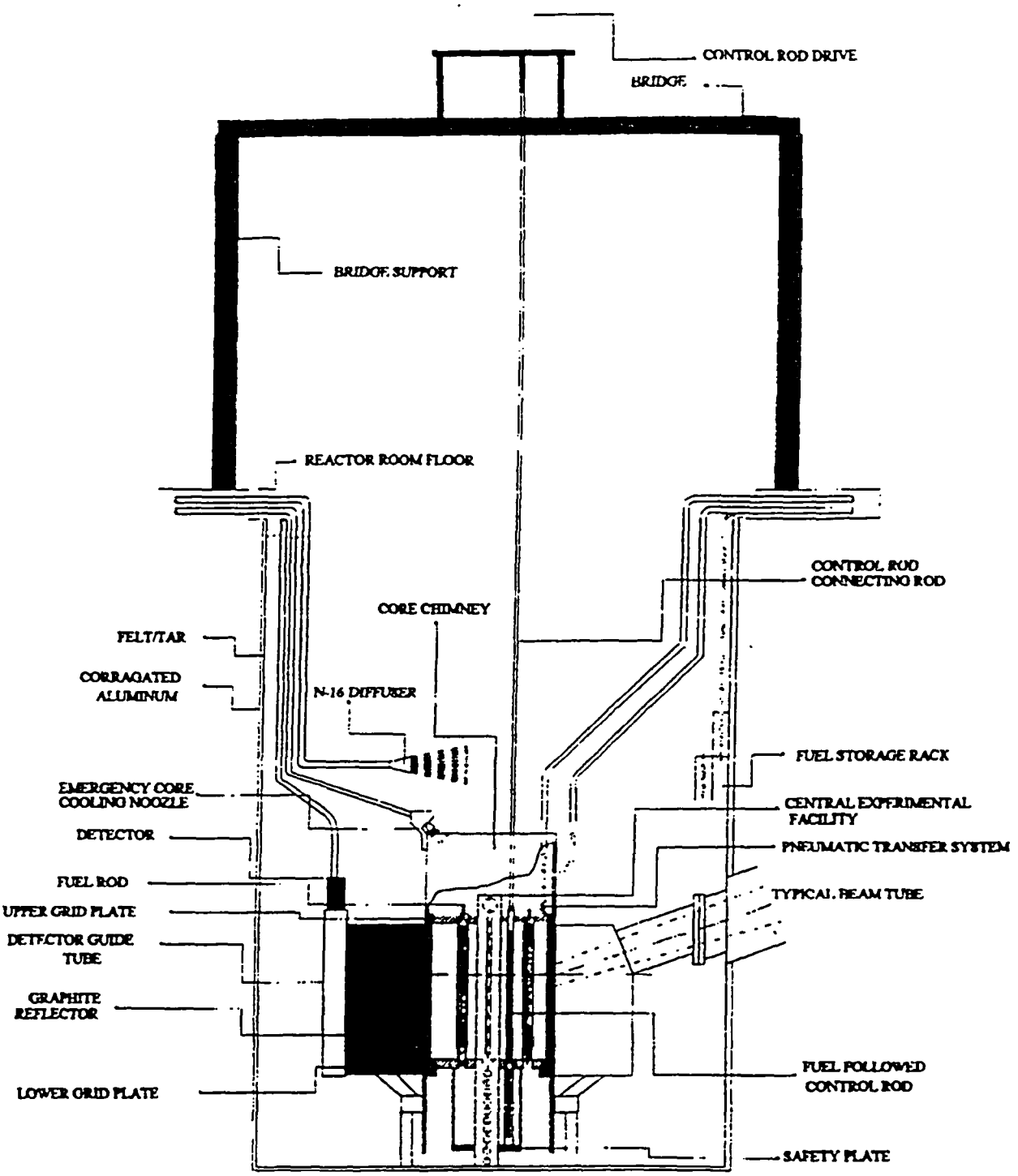

Figure 4.1

MNRC TRIGA Reactor

4.2.1 Fuel-Moderator Element

[redacted]

[redacted] The reactor fuel is a solid, homogeneous mixture of a uranium-zirconium hydride alloy containing [redacted] The hydrogen-to-zirconium atom ratio within the MNRC fuel varies from 1.6 to 1.7. The hydrogen in the alloy is a neutron moderator. The moderator is mixed with the fuel in a solid form which results in the moderator having the same operating conditions as the fuel. This design feature of the fuel contributes to the ability to safely pulse the reactor.

Each element is clad with a stainless steel can that is 0.0508 cm (0.020 in) thick, and all closures are made by heliarc welding. Two sections of graphite are inserted in the can, one above and one below the fuel, to serve as top and bottom neutron reflectors for the core. Stainless steel end fixtures are attached to both ends of the can, making the fuel-moderator element approximately 73.66 cm (29.0 in) long. For the MNRC reactor, modifications to the

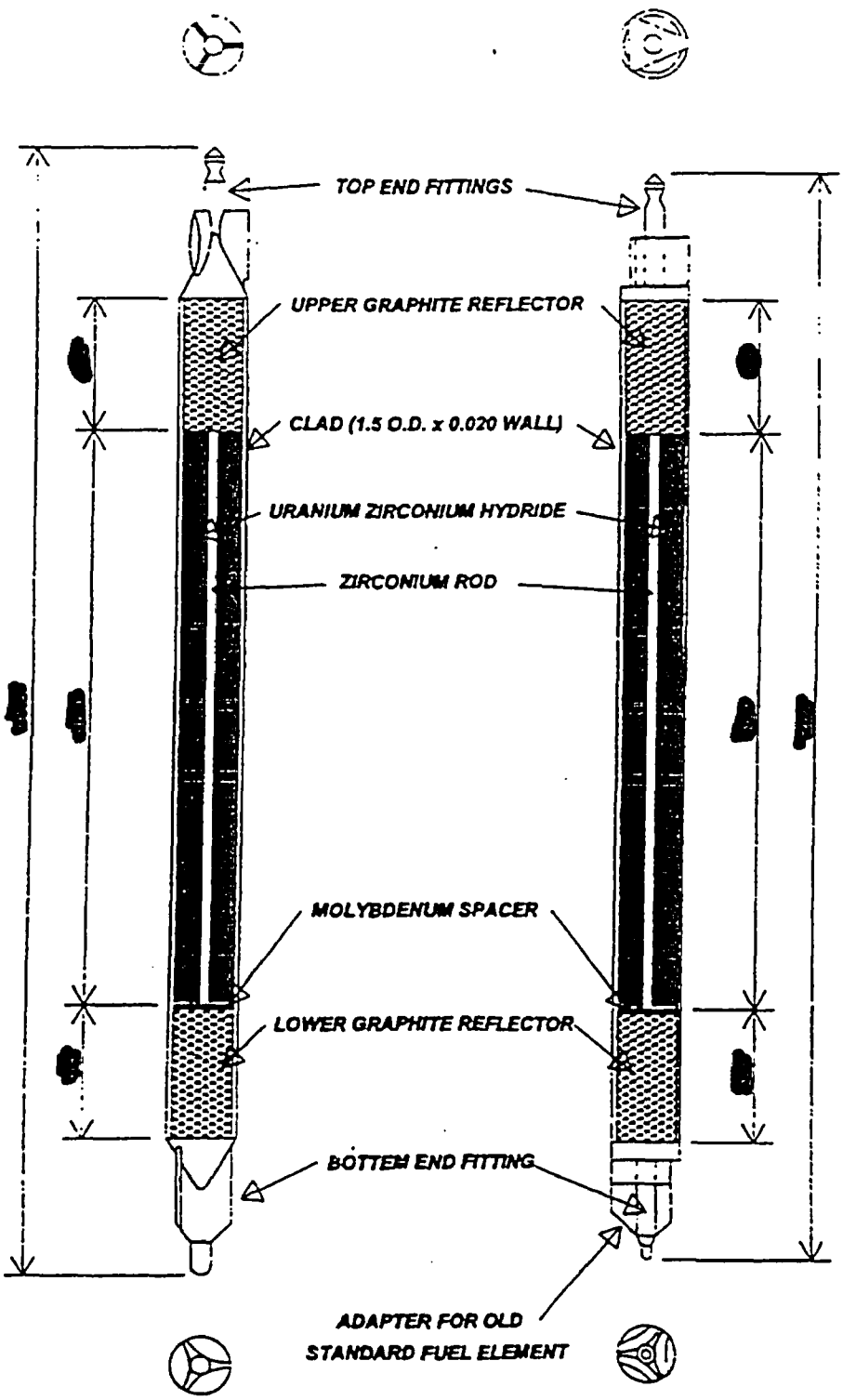

Figure 4.2

Fuel Element Assembly

individual fuel pin ends were made to enhance flow through the coolant channels. Standard reactor fuel element physical dimension limits such as transverse bend and elongation which are acceptable to the NRC staff are specified in TS 3.2.4. [redacted]

An instrumented fuel-moderator element has three thermocouples embedded in the fuel. This element is placed in the peak power location in the core to monitor fuel temperature which is the variable upon which the safety limit is placed. The sensing tips of the fuel element thermocouples are located about 0.762 cm (0.3 in) radially from the vertical centerline. TSs 2.2, 3.2.3, and Table 3.2.3f define operability requirements of instrumented fuel elements. The thermocouple leadout wires pass through a seal in the upper end fixture. A leadout tube provides a watertight conduit that carries the leadout wires above the surface of the water in the reactor tank. In other respects, the instrumented fuel-moderator element is identical to the standard element.

4.2.2 Reflector

The neutron reflector is a ring-shaped block of graphite that surrounds the core radially. The graphite has a radial thickness of 32.0675 cm (12.625 in), with an inside diameter of 55.61 cm (21.5 in) and a height of about 56.1975 cm (22.125 in). The graphite is protected from water penetration by a leak-tight welded-aluminum can. Vertical tubes attached to the outer diameter of the reflector assembly permit accurate and reproducible positioning of fission and ion chambers used to monitor reactor operation. The reflector currently accommodates four tangential neutron radiography beam tubes.

4.2.3 Grid Plates

For 2-MW operation, McClellan has installed a hexagonal grid pattern plate, which has a uniform element spacing (4.355-cm [1.714-in] pitch) to provide for uniform fuel and coolant temperatures. The top grid plate is an aluminum plate with a diameter of 53.34 cm (21 in) and a thickness of 3.175 cm (1.25 in) (1.905 cm [0.75 in] thick in the central region). The plate provides accurate lateral positioning for the core components and is supported by six 1.27-cm (0.5-in) stainless steel rods attached to the bottom grid plate. Both plates are anodized to resist wear and corrosion.

The bottom grid plate is an aluminum plate with a thickness of 3.175 cm (1.25 in) that supports the entire weight of the core and provides accurate spacing between the fuel-moderator elements. Six adapters are bolted to pads welded to a ring that is, in turn, welded to the core barrel to support the bottom grid plate.

A safety plate with a thickness of 2.54 cm (1 in) is provided to preclude the possibility of control rods falling out of the core. The machined aluminum plate is suspended from the lower grid plate by stainless steel rods that are 46.355 cm (18.25 in) long.

4.2.4 Moderator Elements

Graphite dummy elements may be used to fill grid positions not filled by the fuel-moderator elements or other core components. Filled entirely with graphite and clad with aluminum, these components are of the same general dimensions and construction as the fuel-moderator elements.

4.2.5 Neutron Source

An americium-beryllium neutron source is used for reactor startup. The source material is triple encapsulated in welded stainless steel. The capsule has a diameter of approximately 2.54 cm (1 in) and is approximately 7.62 cm (3 in) long. The neutron source holder is an aluminum cylinder that can be installed at any fuel location in the top grid plate (SAR, Section 4.2.5).

4.2.6 Control Rods

The reactivity of the MNRC reactor is controlled by up to five standard control rods and a transient rod. The control and transient rod drives are mounted on a bridge at the top of the reactor tank. The drives are connected to the control and transient rods through a connecting rod assembly. Every core loading includes four or five fuel-followed control rods (FFCRs) (i.e., control rods that have a fuel section below the absorber section). The uppermost section is a solid boron carbide neutron absorber. Immediately below the absorber is a fuel section consisting of 8.5/20, 20/20 or 30/20 fuel. The bottom section of the rod has an air-filled void. The fuel and absorber sections are sealed in Type 304 stainless steel tubes that are approximately 109.22 cm (43 in) long with a diameter of about 3.429 cm (1.35 in).

The applicant has the option of using, in MixJ core loadings, four FFCRs and one control rod containing a stainless steel neutron absorber section and no fuel follower. The low reactivity worth of this rod allows very fine reactivity control.

The rods are attached to drive assemblies mounted on a raised bridge. The drive assembly consists of a stepping motor and reduction gear driving a rack and pinion. The control rods and rod extensions are connected to the rack through an electromagnet and armature. The transient rod is also used for operating in pulse and square wave mode. The pulse rod can be rapidly removed from the core using compressed air. The control rods are designed and will be tested to ensure operability (TS 3.2.1 maximum permissible drop time of 1 sec or less). Additional descriptions of the control rod system, control rods, and drives are provided in Chapter 7 of this SER.

4.2.7 Reference Cores

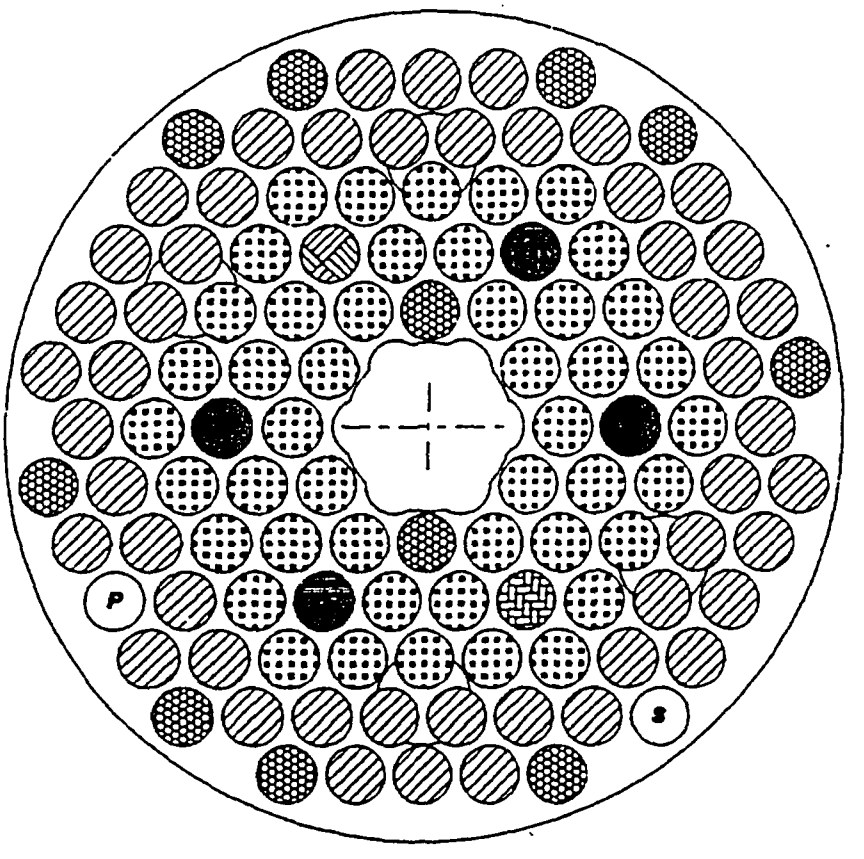

Figure 4.3

MixJ Reference Core

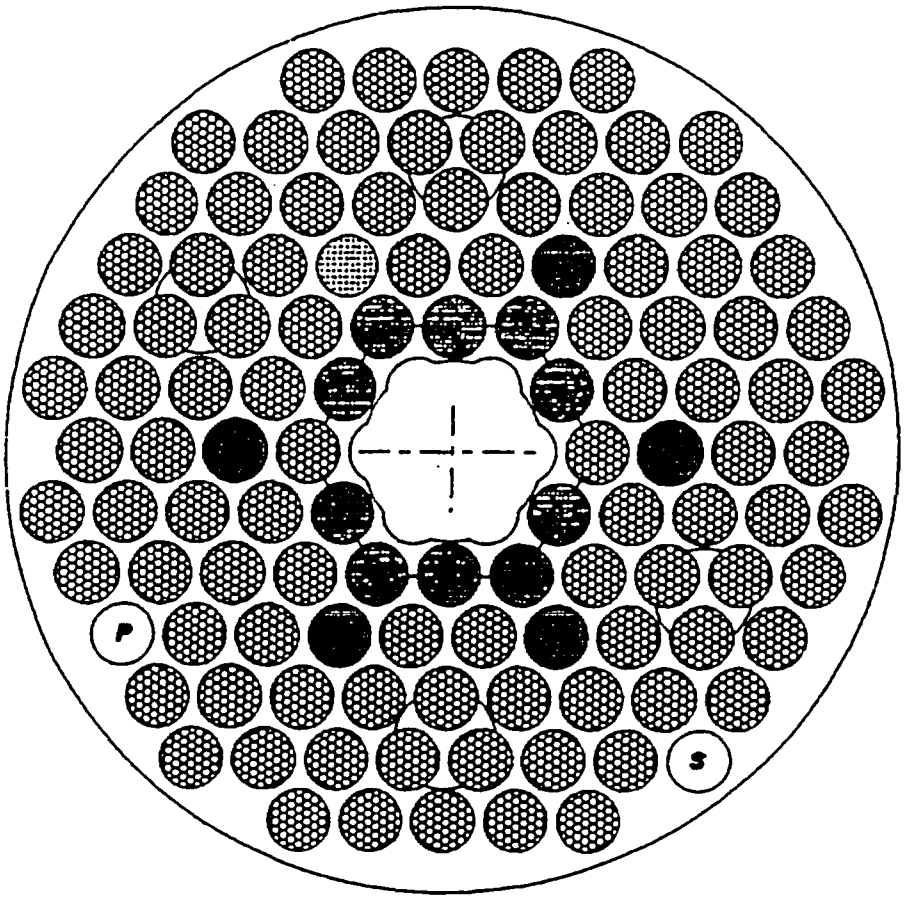

Figure 4.4

20E Reference Core

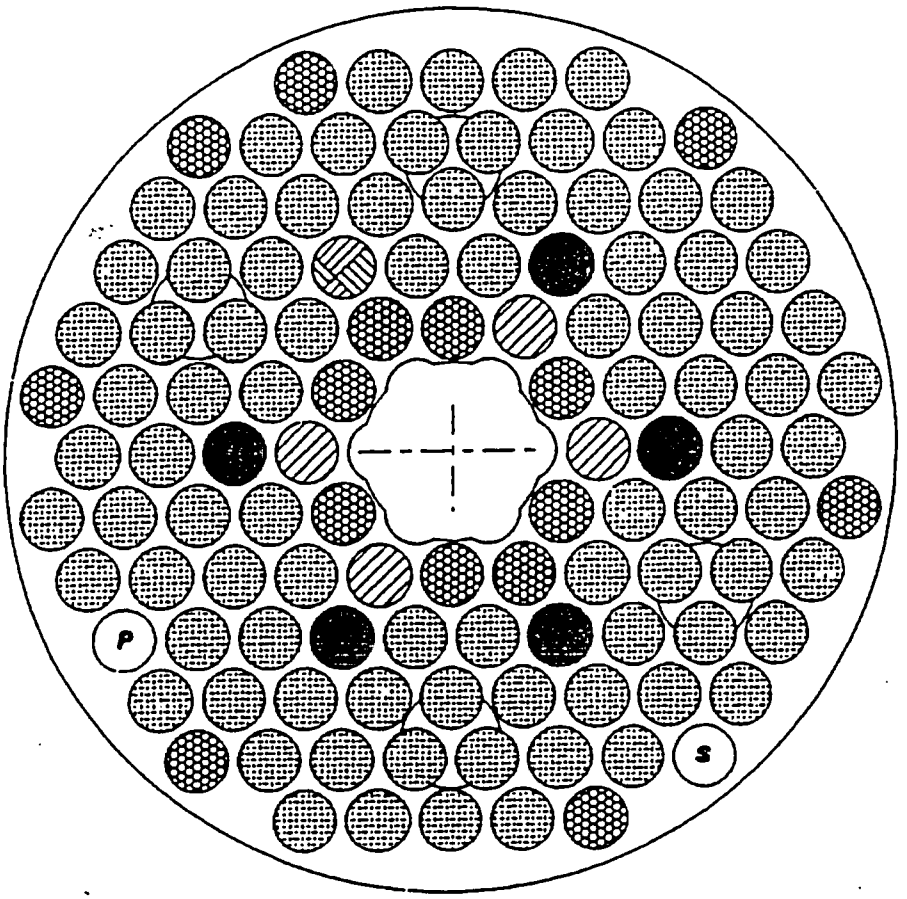

Figure 4.5

30B Reference Core

For each of the reference cores or variations on the cores, the initial load and test program must be conducted with the central irradiation facility aluminum graphite plug in place. For 20E, variations on 20E and 30B core loadings with the central core irradiation facility filled with an experiment or water, fuel temperature measurements will be performed in the analyzed maximum temperature core position before routine operations to assure that the fuel temperature limits are not exceeded.

4.3 Reactor Tank

The MNRC reactor core is located in a cylindrical aluminum tank surrounded by a reinforced concrete structure (Figure 4.6). The reactor tank is a welded aluminum vessel with 0.635-cm (0.25-in) walls, a diameter of approximately 2.218 m (7 ft), and a depth of approximately 7.448 m (24.5 ft). The tank is welded for water tightness. The integrity of the weld joints has been verified by radiographic testing, dye penetrant checking, and leak testing. The outside wall of the tank is coated with a tar material for corrosion protection. (The biological shield surrounding the reactor tank is discussed in Section 11.)

Four beam tubes are attached to the reactor tank at 90° intervals tangential to the reflector assembly and core. The tank wall section of the beam tubes consists of a pipe with a diameter of 31.75 cm (12.5 in) welded to the tank wall with a flange at its end. (Flanges are welded to the in-tank end to ensure water tightness inside the beam tubes without penetrating the tank wall.) The beam tubes clamp onto the tank wall flanges and extend through the bulk shielding concrete that surrounds the reactor tank. An additional irradiation facility is being developed to perform Boron Neutron Capture Therapy (BNCT) work.

4.4 Reactor Instrumentation

The MNRC reactor instrumentation is similar to that found on research reactor installations at other locations. The control console and associated instruments are typical of those in use at newer TRIGA research reactors. The MNRC reactor, one of the newest TRIGAs, has instrumentation that has been upgraded to the state-of-the-art.

The nuclear instrumentation gives the operator the necessary information for proper manipulation of the controls. The following instrumentation functions are provided and are discussed in more detail in Chapter 7 of this SER.

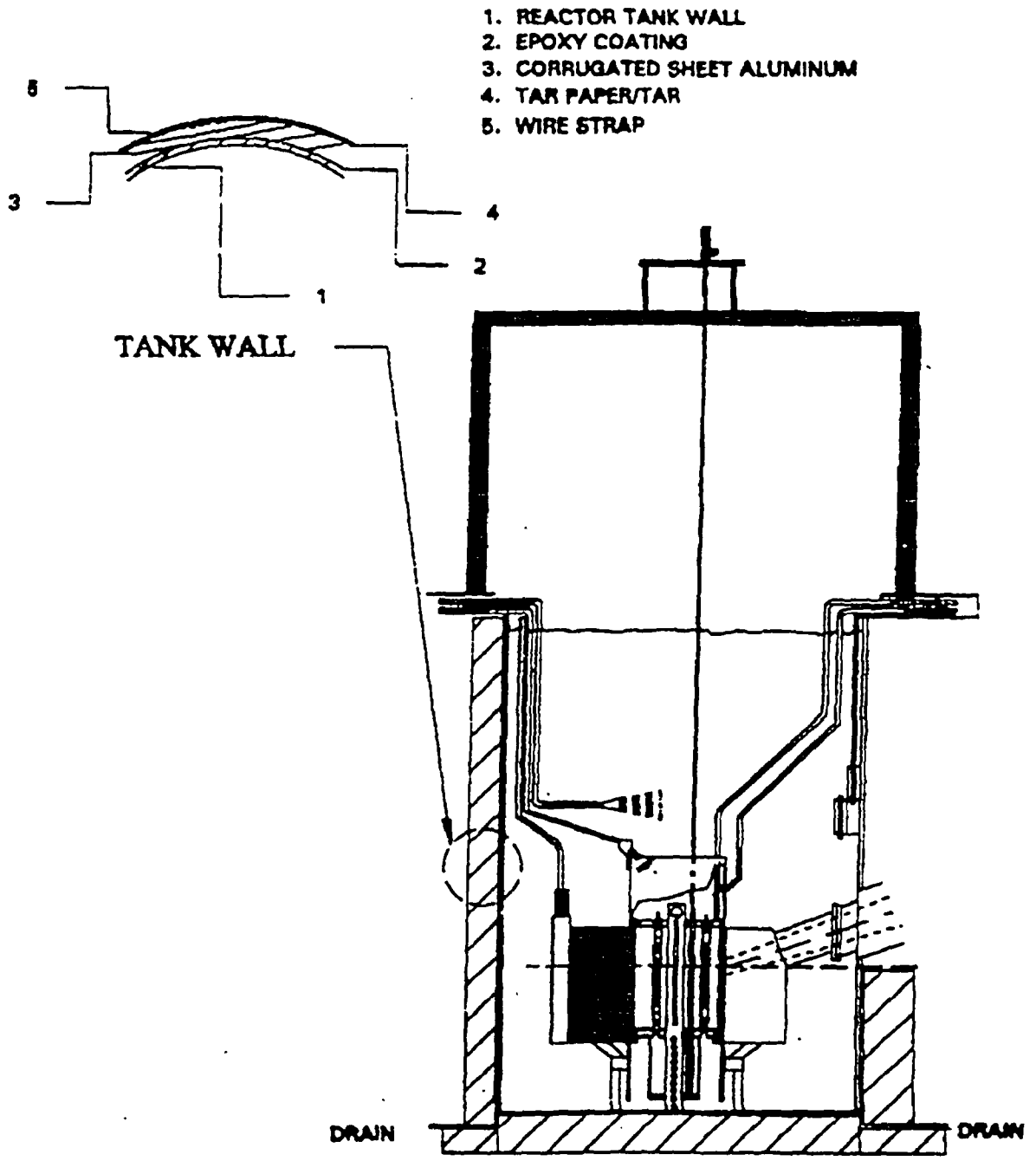

Figure 4.6

Reactor Tank

- Source Range (start up channel)
- Percent Power with Scram
- Power Rate of Change
- Multi-linear Power

4.5 Thermal-Hydraulics Analysis

The thermal-hydraulic analysis for operation of the MNRC reactor was performed at a nominal 2-MW and a maximum 2.3-MW thermal power using the RELAP5/MOD3 computer program (Ref. 3). The RELAP5 code is highly generic and can be used to provide a best-estimate analysis of a wide variety of hydraulic and thermal transients involving almost any user-defined nuclear or nonnuclear system. The MOD3 version of RELAP5 was developed jointly by the NRC and a consortium of several countries and domestic organizations that are members of the International Code Assessment and Applications Program (ICAP).

A RELAP5 model consists of a system of control volumes connected by flow junctions. The fluid mass, momentum, and energy equations—along with the appropriate equation of state—are solved for the user-defined geometry. The RELAP5/MOD3 code uses a full non-homogeneous, non-equilibrium, six-equation, two-fluid model for simulation of two-phase system transient behavior. User-defined heat structures are used to simulate the reactor fuel rods. Heat transfer coefficients are computed, as appropriate, for the channel flow and fluid state. A coupled space-independent reactor kinetics model is available for reactivity transients.

Some of the RELAP5/MOD3 features important for simulating a natural circulation reactor such as the TRIGA at the MNRC are as follows:

- an ability to compute the system density distribution and the gravity force terms in the coolant momentum equation

- an ability to compute implicitly the local pool or convective subcooled boiling, which might occur in TRIGA reactors

- a new critical heat flux correlation for rod bundles on the basis of an extensive tabular set of experimental data

- temperature-dependent material properties

- special cross-flow models that allow simulation of the two dimensional flow as a result of radial power differences in the core

- capability to simulate a two-channel model, with a hot channel (hottest in the core) and an average channel selected to represent the rest of the core

The RELAP5 code has been used by the NRC for analysis of several non-power reactors. The code selects the heat transfer correlation to be used on the basis of the wall temperature and local flow and fluid state. The critical heat-flux correlation also uses local conditions and implicitly accounts for axial power distribution. The critical heat-flux correlation is further corrected for potential errors if the correlation is entered with flow and fluid conditions that are not in the dominant regions of the database. On the basis of its review, the staff concludes that the RELAP5 code was properly used for the analysis of the thermal-hydraulic performance of the MNRC TRIGA, with natural convection cooling.

When power in the MNRC reactor core is increased, nucleation will occur on the fuel rod surfaces and fully developed nucleate boiling may eventually occur. As long as the surface heat flux remains below the critical heat flux (CHF), it is possible to increase the heat flux without an appreciable increase in fuel rod surface temperature. If the CHF is exceeded, film boiling occurs and the surface temperature almost immediately increases to a much higher value, and fuel rod damage may occur. The safe operation of the reactor depends on maintaining the operating heat flux safely below the CHF. The ratio of the CHF to the peak core heat flux is thus a measure of the safety margin.

The net driving force for flow within the tank of the MNRC reactor is the difference between the net buoyancy of the water heated in the core and the friction within the flow paths. Both are implicitly computed by the RELAP5 code. Friction losses consist mainly of the wall friction within the fuel-pin flow channels and form losses in the upper and lower grid plate regions. Friction losses in other flow paths are computed but are small because of the low coolant velocities. The wall friction is computed directly by RELAP5/MOD3.

The form loss coefficients for the upper and lower grid regions are supplied as inputs to the code. Values were computed from data presented in handbooks for similar geometries. These calculated loss coefficients are significantly larger, and thus more conservative, than those used by GA in their analyses (Ref. 3). The set of loss coefficients selected for a given calculation was the one that yielded the more conservative result for the quantity of interest. The computed values were used for the reactor thermal-hydraulic analyses being discussed in this section since they yielded higher fuel temperatures.

The buoyancy of the water in the core hot channel can be influenced by the cross flow between the hot and average channels. Traditionally, the hot and average channels are assumed to be completely separate (no cross flow) because of the very narrow spacing between the fuel rods. The RELAP5 code provides a means for estimating the effects of cross flow between the hot and average flow channels. The flow effect is expected to be very small, and it is impossible to assess the accuracy of computed cross flows. Scoping calculations performed with RELAP5 showed cross flow to have no effect on fuel temperature and to increase the CHF ratio only slightly. Thus, cross flow is conservatively neglected in this analysis. (The results for steady-state operation are presented in Table 4.1.)

The minimum calculated CHF ratio is 2.51 at 2.3 MW at the limiting inlet temperature for the reference core with the worse power peaking. This value (2.51) indicates that a significant margin exists between the proposed maximum operating power (2.3 MW) and the power (≥3 MW) that could result in exceeding the CHF. The magnitude of the CHF depends upon local fluid conditions, as well as on channel inlet conditions and local fission power density. Reactor parameters in Table 4.1 are acceptable for routine operation. The maximum predicted fuel temperature is 705°C. The calculated coolant temperature and void distributions in the hot channel for both the nominal and limiting cases are acceptable. As discussed below, the safety limit for the MNRC reactor (TS 2.1) has been established at 930°C. Operation of the reactor at a power level of 2.3 MW will maintain fuel temperatures acceptably below the safety limit.

4.6 Safety Limits

The limiting criterion for safety is the assurance that the fuel cladding will remain intact and not allow the escape of fission products. Therefore, for purposes of the safety analysis, the applicant has proposed a safety limit for the temperature of the fuel that will not

result in failure of the fuel cladding as a result of internal pressure or clad melting.

Table 4.1

Heat Transfer and Hydraulic Parameters for Operation at 2.0 MW and 2.3 MW with 101 Fuel Elements

Parameter	At Limiting Inlet Temperature (35°C) and 2.3 MW	At Nominal Inlet Temperature (32.2°C) and 2.0 MW
[redacted]	[redacted]	[redacted]
[redacted]	[redacted]	[redacted]
Flow Area	546 cm^2	546 cm^2
Hydraulic Diameter	1.86 cm	1.86 cm
Heat Transfer Surface Area	4.53 m^2	4.53 m^2
Inlet Coolant Temperature	35.0°C	32.2°C
Exit Coolant Temperature	106°C	103°C
Upper Pool Temperature	66°C	57°C
Coolant Mass Flow	7.7 kg/sec	6.7 kg/sec
Average Fuel Temperature	373°C (hot pin) 273°C (average pin)	341°C (hot pin) 254°C (average pin)
Maximum Clad Surface Temperature	146°C	144°C
Maximum Fuel Temperature	705°C	631°C
Average Heat Flux	50.8 w/cm^2	44.2 w/cm^2
Maximum Heat Flux	113 w/cm^2	98 w/cm^2
Hot Channel Outlet Void	4.0%	2.0%
Core Outlet Subcooling	8°C	11°C
Minimum CHF Ratio	2.51	2.94

As the temperature of a $ZrH_{1.7}$ fuel element increases, the internal pressure inside the fuel cladding also increases because of the presence of air, fission product gases, and hydrogen from the disassociation of hydrogen and zirconium in the fuel moderator with hydrogen being the most important contributor to the internal pressure. If the temperature becomes high enough, the stress on the cladding as a result of the internal pressure can exceed the ultimate strength of the stainless steel cladding, and the cladding will fail, releasing fission products from the fuel. The ultimate strength of the cladding material is also temperature-dependent and decreases with increasing temperature. The applicant has proposed a safety limit of 930°C (TS 2.1) on fuel temperature (for cladding temperature above 500°C) where internal pressure is slightly less than the ultimate cladding strength (Figure 4.7).

For the pulse mode of operation the applicant has proposed a safety limit in TS 2.1 of 1100°C (for clad temperature less than 500°C). During a pulse, the clad temperature is well below the fuel temperature. The cooler clad temperature results in a higher ultimate stress for the stainless steel cladding. This allows a higher internal pressure to be present inside of the fuel cladding which allows a higher fuel temperature safety limit. Also, the diffusion of hydrogen inside the fuel element reduces the peak pressure inside the fuel element as contrasted with that predicted at equilibrium at peak fuel temperature. This also allows for a higher safety limit for fuel temperature during pulsing.

On the basis of theoretical and experimental evidence (Simnad et.al., 1976; Simnad, 1980, GA 4314), the above limits represent a conservative value to provide confidence that the fuel elements will maintain their integrity and that no cladding damage will occur.

4.7 Limiting Safety System Settings

In accordance with 10 CFR 50.36, the applicant proposed a limiting safety system setting (LSSS) designed to ensure that automatic protective action (reactor shutdown) would occur in sufficient time to prevent safety limits from being exceeded. The values used by the applicant to set the reactor instrumentation is a fuel temperature of 750°C. The instrumented fuel element is located in the analyzed peak power location of the operational core. This temperature provides a significant safety margin to allow for any difference between true and measured values (estimated to be only a few degrees).

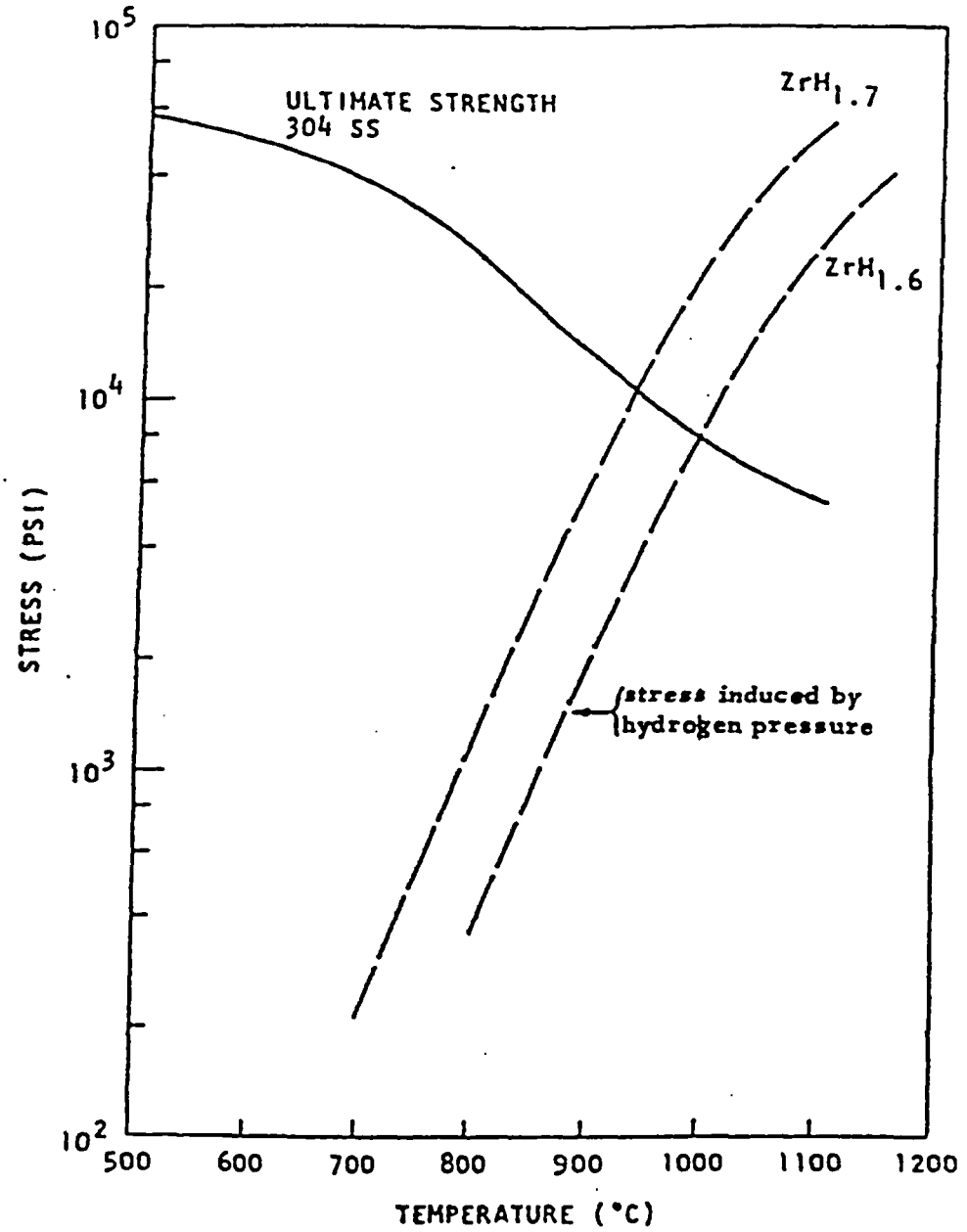

Figure 4.7

Strength and Applied Stress as a Function of Temperature

For pulse operation, the same value is adopted; however, there is no effect on the pulse since the width of the pulse is extremely small (milliseconds) when compared to the time constants (seconds) to scram the reactor through the temperature scram. The LSSS is used to limit the energy release after the pulse in the unlikely case where the transient rod does not reinsert into the core and fuel temperature continues to increase.

4.8 Operating Conditions

During actual operation at 2 MW, the maximum fuel temperatures have remained below 500°C; therefore, operating experience would indicate that an additional safety margin exists.

4.9 Pulse Mode of Operation

The basic parameter which allows the TRIGA reactor system to operate safely with large step insertions of reactivity is the prompt negative temperature coefficient associated with the TRIGA fuel and core design. This negative temperature coefficient allows operational flexibility in steady-state operation as the effect of accidental reactivity changes occurring from experimental devices or other incidences is greatly reduced (as contrasted with plate fuel type reactors).

General Atomics, the designer of the reactor, has developed techniques to calculate the temperature coefficient accurately and, therefore, predict the transient behavior of the reactor. This temperature coefficient primarily arises from a change in the fuel utilization factor resulting from the heating of the uranium-zirconium hydride fuel-moderator elements (less neutrons available to cause fission). The coefficient is prompt because the fuel is intimately mixed with a large portion of the moderator; thus, fuel and solid moderator temperatures rise simultaneously. The heating of the moderator mixed with the heating of the fuel causes the spectrum to harden more in the fuel than in the water, which increases the leakage of neutrons from the fuel into the water moderator surrounding the fuel, where they are absorbed preferentially. This yields a loss of reactivity. An additional contribution to the prompt, negative temperature coefficient is the Doppler broadening of the uranium-238 resonances at high temperatures, which increases nonproductive neutron capture in these resonances.

The applicant has calculated the effects of pulses on the MNRC reactor and has requested a maximum insertion of reactivity for the pulse mode of $1.75. TRIGA reactors that operate for long periods of time at high power levels must carefully control the maximum insertion of reactivity of pulses. In steady state power operation the fuel is hottest at the center. The power distribution drives hydrogen towards the cooler outer portion of the fuel resulting in a hydrogen-to-zirconium ratio that is above normal values. During a pulse, the power distribution is opposite steady-state, with the hottest portion of the fuel at the surface. If the pulse peak power and thus peak fuel temperature (determined by pulse reactivity) is too high, hydrogen can be driven out of the fuel in this hydrogen-rich area, causing higher than expected pressure in the fuel element. The applicant's analysis (SAR Section 13.2.2.2.1) shows the worst case that might result in limited fuel failure was a pulse of $1.92; therefore, a pulse of $1.75 is below the worst case reactivity insertion accident limit. The $0.90 square wave step is further below the worst case reactivity insertion accident limit.

4.10 Shutdown Margin, Excess Reactivity, and Experiment Reactivity Worth

The limit on the minimum shutdown margin ensures that the reactor can be safety shutdown from any operational configuration, even if the highest worth control rod remains stuck out of the core. The applicant has discussed the shutdown margin of the reference cores in Section 4.5.5 of the SAR. This minimum shutdown margin (TS 3.1.3.a.) of $0.50 will ensure that the reactor can be shut down and remain shut down. This minimum shutdown margin must be met with the reactor in any core condition, with the most reactive control rod assumed to be fully withdrawn, and with the absolute value of all moveable experiments in their most reactive condition or $1.00, whichever is greater. The value of $0.50 is a standard value for shutdown margin that is measurable and is acceptable to the NRC staff.

The total excess reactivity that McClellan is authorized to have loaded into the TRIGA reactor during operation is $9.50 (TS 3.1.3.b.). This amount provides for the various negative reactivity effects associated with operation and use of the reactor, as well as allowing some operational flexibility. It is essential that the applicant focus on maintaining the ensured capability to shut down the reactor (hence, the minimum shutdown margin). Beyond that, imposing a limit on excess reactivity helps ensure that the safety analysis report assumptions and analyses are applicable to all operational cores.

The applicant has performed a series of calculations to determine the rod worths, excess reactivity, and shutdown margin of the reference cores. These calculations are conservative and generally overestimate excess reactivity and underestimate the shutdown margin. The calculated excess reactivities for all cores are within the proposed TS limits. The calculated shutdown margins for the MixJ and 30B reference cores are within the proposed TS limits. The calculated shutdown margin for the 20E core is $0.32, which is less than the minimum TS shutdown margin of $0.50. However, because of the conservatisms in the calculational methods used, the applicant expects that the measurements of the 20E core will be within the TS limits. If not, the applicant will remove a fuel element from the reference core, which is calculated to increase shutdown margin to acceptable limits (SAR 4.5.5.3).

Depending on the actual core load, the maximum reactivity worth of a control rod is approximately $2.36 and the total worth of all control rods is about $13.03. Generally, any core loading producing higher total worth of all blades will also correspond to a higher worth of the most reactive control rod. Therefore, as long as the total excess reactivity loaded into the core, including that resulting from experiments, is no more than the TS limit of $9.50 (TS 3.1.3.b.), the shutdown margin can be achieved. The staff concludes that the shutdown margin of $0.50, with the highest worth scrammable rod fully withdrawn is sufficient to ensure that the reactor can adequately shut down under all credible conditions.

The proposed TS (3.8.1.c.) limit the combined absolute reactivity worths of <u>all</u> experiments to $1.92. The proposed TS (3.8.1.a.) limit the absolute reactivity worth of movable experiments to less than $1.00 per experiment. The proposed TS (1.5.2) for the McClellan reactor define a movable experiment as one that can be inserted, removed, and manipulated while the reactor is operating. The proposed TS define secured experiments as those mechanically held in a stationary position relative to the reactor. The restraining forces must be substantially greater than those to which the experiment might be subjected by hydraulic, pneumatic, buoyant, or other forces that are normal to the operating environment of the experiment or forces arising as a result of credible malfunctions. Secured experiments are limited by the proposed TS to a worth of $1.75. This worth is less than the positive reactivity insertion limit of the pulse analyzed in the SAR Chapter 13 (i.e., pulse that would be needed to reach the fuel temperature safety limit).

The staff reviewed proposed limitations on the worth of experiments. On the basis of this review, the staff concludes that these limitations are conservative and provide reasonable assurance that failure of a single experiment resulting in a positive reactivity insertion would not result in damage to the fuel or reactor components. Also, in the extremely unlikely event of simultaneous multiple failures of all in-tank experiments, the positive reactivity insertion would not result in a reactivity addition of more than $1.92, the pulse analyzed in SAR Chapter 13 (TS 3.8.1.c.). Further, the staff concludes that reasonable assurance exists that these experiments will not lead to a reactivity insertion that will pose a threat to the health and safety of the public.

4.11 Conclusions

On the basis of an evaluation of the information presented in the applicant's SAR, the staff concludes as follows:

- The staff reviewed the information pertaining to the design, construction, function, and operation of the reactor fuel, neutron reflectors, grid and safety plates, moderator/graphite elements, neutron source, control rods and reactor core support structure. On the basis of this review, the staff has concluded that the design of these core-related components for the MNRC facility are acceptable and should continue to permit safe operation and shutdown of the reactor. The staff also concludes that the use of 20/20 and 30/20 fuels in the McClellan TRIGA reactor is acceptable

- The reactor tank and attachments are designed to ensure safe reactor operation and minimize the possibility of a tank failure that could result in loss of coolant. The design features of the tank offer reasonable assurance of reliable performance for the period of the license.

- The information provided in the McClellan SAR includes thermal-hydraulic analyses for the reactor. The applicant has justified the assumptions and methods used and has validated their results. The thermal-hydraulic analysis gives reasonable assurance that the reactor can be operated at its licensed power level without undue risk to the health and safety of the public.

- The applicant has proposed limits on pulsing the reactor. The maximum reactivity addition for pulsing will ensure that the reactor can be safely pulsed without fuel damage. The large, prompt, negative temperature coefficient of reactivity of the uranium-zirconium hydride fuel moderator provides a basis for safe operation of the reactor in the nonpulsing mode and is the essential characteristic supporting the capability of operation of the reactor in a pulse mode.

- The applicant has discussed and proposed minimum shutdown margin and excess reactivity limits that are acceptable to the staff. The minimum shutdown margin ensures that the reactor can be shutdown from any operating condition with the highest worth control rod stuck out of the core. The limit on excess reactivity allows operational flexibility while limiting the reactivity available for reactivity addition accidents.

- Reactivity limits on experiments have been proposed by the applicant. These limits apply to the absolute value of all experiments, moveable experiments, and secured experiments. The applicant has proposed values that are bounded by the pulse reactivity addition analysis. Therefore, failure of experiments will not add unacceptable amounts of reactivity to the reactor.

- The fuel and core design, when considered with the restrictions and requirements on the operation of the reference cores and variations of the reference cores, and the LSSS will ensure that the maximum fuel temperature will not exceed the safety limit for steady state operation of 930°C or the safety limit for pulse operation of 1100°C. The LSSS (TS 2.2.1) will be at least approximately 180°C less than the safety limits to provide a safety margin; therefore, the reactor will be shutdown before reaching the safety limit. Given these operational conditions specified in TSs, the staff concludes that there is reasonable assurance that the MNRC TRIGA research reactor can be operated safety at power levels up to 2.3 MW(t) and with reactivity additions in the pulse mode of up to $1.75, as limited by the proposed TS requirements.

5 REACTOR COOLANT SYSTEMS

5.1 Systems Summary

The reactor core is cooled by the natural circulation of water in the reactor tank, where the water temperature is maintained at an approximate average of 43.3°C (110°F) by the external primary and secondary cooling system.

The primary cooling system, as shown in Figure 5.1, is designed to remove continually at least 2 MW of heat from the reactor tank water. It contains the necessary equipment and controls to circulate up to 63 L/s (1000 gpm) of tank water and to maintain the temperature of the water returning to the tank at about 32.2°C (90°F). Instrumentation is provided to monitor system operation, water temperatures, pressure, flow, and tank level. Tank bulk water outlet and inlet temperatures are continuously recorded. TSs (3.3.b) require that the water level be maintained at least > 7 m (23 ft) above the reactor core to provide adequate coolant volume and the necessary shielding for the core and any nitrogen-16 produced.

The primary and secondary systems are operated and monitored from the reactor control room, with their remote controls and monitoring instrumentation in the reactor room. There is also a direct reactor tank level indicator that is visible from the reactor room. The pressure of the primary system during operation is maintained lower than that of the secondary system so that, in case of a leak between the two systems in the heat exchanger, slightly contaminated water from the primary system will not enter the secondary system. The differential pressure is established by valve manipulation and ensured by simultaneously starting and stopping the circulation pumps for the primary and secondary systems. During system shutdown, the differential pressure is essentially equal so that over a long outage some small primary-to-secondary leakage may be possible if the heat exchanger were to fail. All components having potential contact with the primary water are normally made from either aluminum or stainless steel. Primary water flows within the plates of the heat exchangers.

The open end of the pump suction line is less than 0.912 m (3 ft) below the normal tank water level. In addition, from about 20.32 cm (8 in) below the normal tank water level to the open pipe end, the suction line is perforated. If a primary system component fails downstream of the pump, the tank water level would be lowered to the first perforation—about 20.32 cm (8 in). At

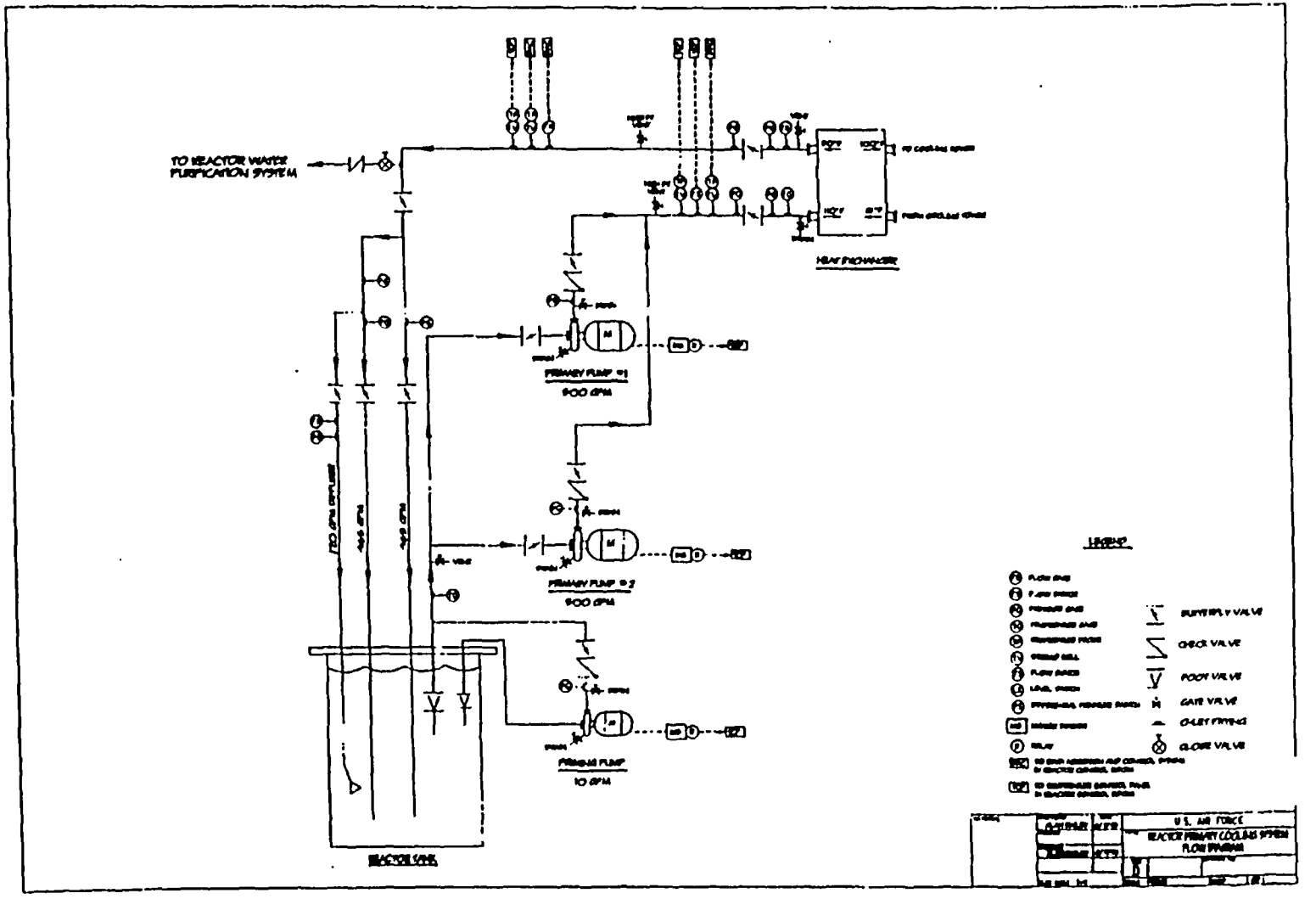

Figure 5.1
Reactor Primary Cooling System

this point, the pump should lose suction and cease pumping. In no case, however, can the pump lower the water level beyond the entrance to the pump suction line (i.e., less than 0.912 m (3 ft)). Even if the water level was lowered to the open pipe end, there would be approximately 5.016 m (16.5 ft) of water above the fuel elements in the core.

The reactor water purification systems (Figure 5.2) maintain the purity of the primary water. Two separate systems can be operated independently or can be cross-connected to operate as one unit. One is used to filter particulate matter from the surface of the reactor tank, and the other deionizes the water to maintain the purity. The filtration system uses a drum surface skimmer that floats near the surface of the water in the reactor tank. A pump moves water from the surface skimmer to fiber cartridge filter elements. These filter elements remove any dirt or debris from the reactor tank water by mechanically filtering them from the water before returning it to the reactor tank. The system can be used to return the filtered water directly to the reactor tank or, through a series of valve manipulations, it can send the filtered water through the deionizers and then back to the reactor tank. The system is used to supply the deionizing resin bed during extended shutdown periods when the primary cooling system is not operational.

Makeup water can be added to the primary system if necessary. A 300-gallon plastic tank of demineralized water is available to make up any primary cooling system water lost by evaporation or other means. A water tank receiving line is provided for connection to a delivery truck. The makeup system is equipped with a positive displacement pump and resin canister of the same type used in the purification system. The outflow of the makeup system discharges to the purification system.

A set of deionizing resin beds (four) is supplied with water from the primary cooling system (outlet of the heat exchanger) at a nominal flow rate of 0.945 L/s (15 gpm). The resin bed consists of four fiberglass, throwaway canisters of mixed-bed resins. Two of the canisters are normally online and the other two canisters are in a standby condition. The objective of this cleanup system is to maintain primary water purity. The applicant has committed in TS 3.3 to maintain that purity at a conductivity of 5μm/cm or less.

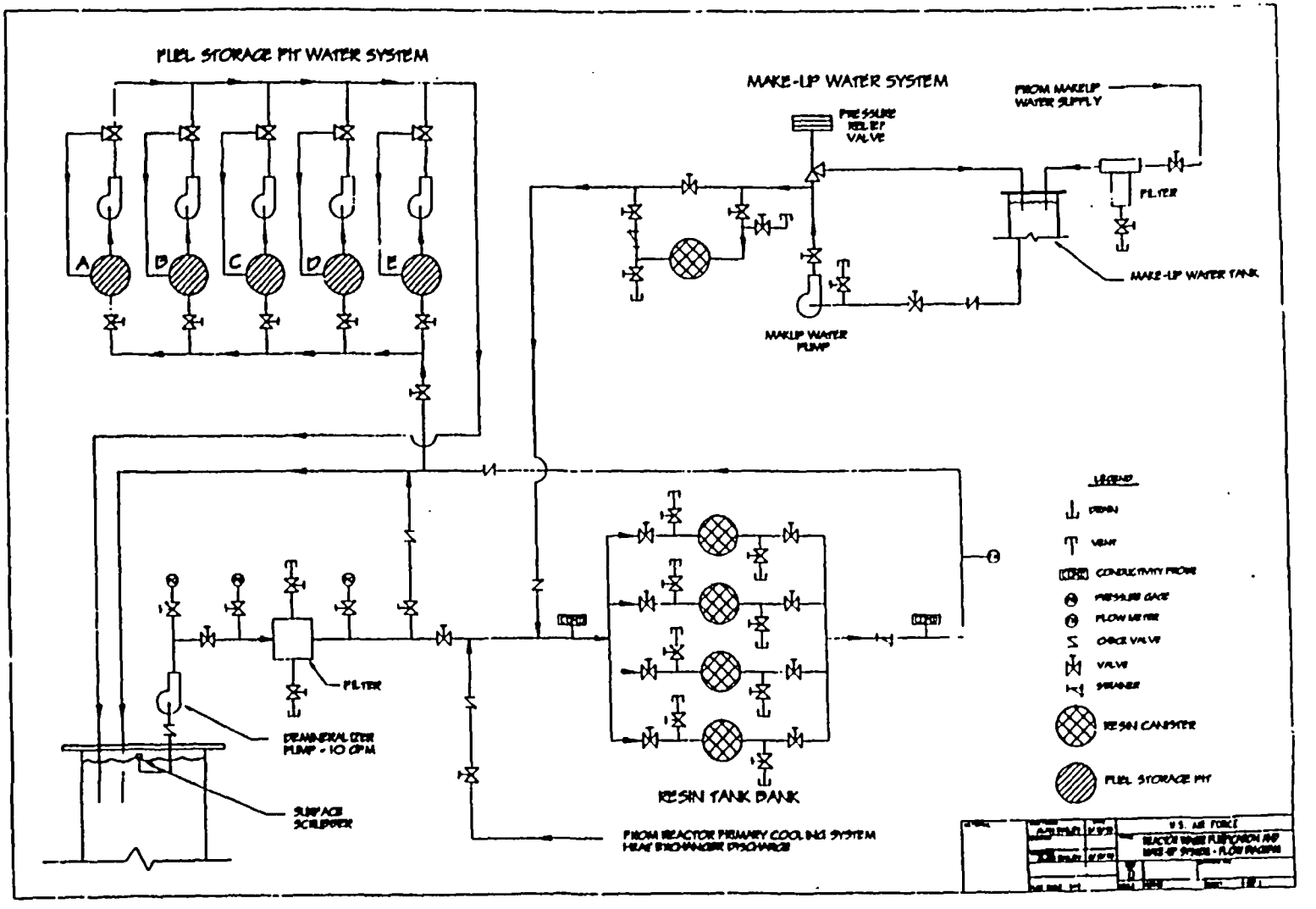

Figure 5.2
Purification and Makeup System

The secondary cooling system can continually remove 2 MW of heat from the primary system during normal weather conditions. The system circulates approximately 63 L/s (1000 gpm) of water from a cooling tower through the primary-to-secondary heat exchanger and back to the cooling tower (Figure 5.3). Water chemistry, conductivity, and pH are monitored and maintained by an automatic water conditioning system that adds chemicals as required.

The dose rate at the tank surface as a result of Nitrogen-16 is greatly reduced by the operation of a diffuser incorporated in the primary coolant system. The diffuser operates anytime a primary coolant pump is running. The diffuser discharge is about 2 feet above the reactor and directs about 120 gallons per minute across the top of the reactor. Radiological effects are discussed in Chapter 11 of this SER.

The fuel storage pit water system is used when the shielding of stored fuel is required. Water is supplied from the demineralizer system outlet and pit water level is controlled by a float-actuated water supply valve. Each pit subsystem contains a pump and a three-way valve in the pump discharge line. This configuration allows for once-through, recirculation, or feed-and-bleed operation depending on fuel element shielding requirements. When operating in the once-through or feed-and-bleed modes, excess water is returned to the reactor tank.

Although not strictly part of the reactor coolant systems, the Auxiliary Makeup Water System (AMUWS) can supply water to the reactor core from an external source in case of a loss of coolant. The AMUWS is discussed in Chapter 9 of this SER.

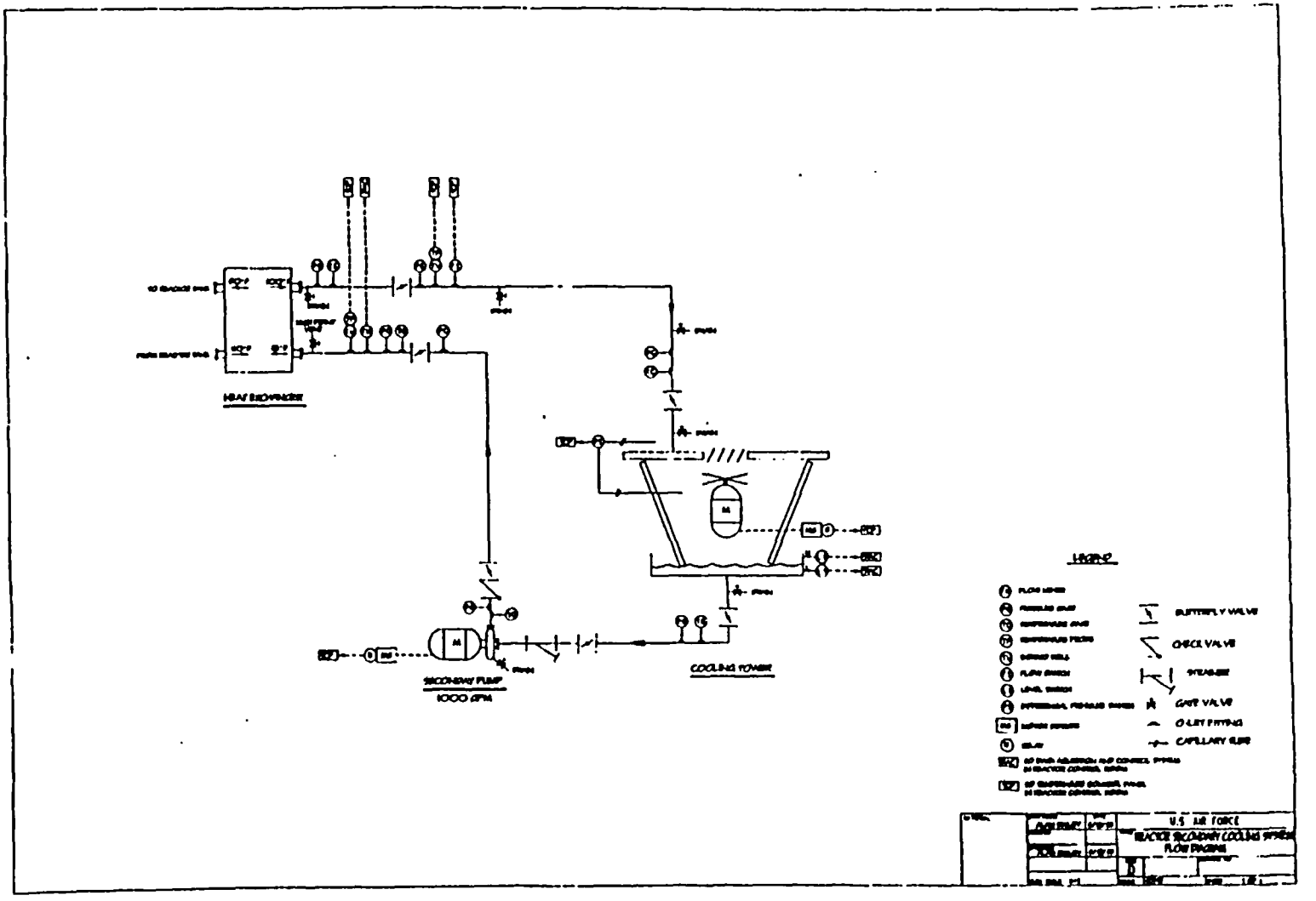

Figure 5.3
Reactor Secondary Cooling System

5.2 Conclusions

On the basis of an evaluation of the information presented in the applicant's SAR, the staff concludes the following:

- The reactor cooling system is designed to remove sufficient fission heat under all possible licensed reactor operating conditions and gives reasonable assurance of fuel integrity.

- The water purification system will control chemical quality of the primary coolant that will limit corrosion of the reactor fuel and other systems that contact primary coolant to acceptable levels for the duration of the license.

- The design of the reactor pool and the nitrogen-16 diffuser system will provide sufficient shielding and control of nitrogen-16 to maintain personnel exposures below the limits in 10 CFR Part 20 and the guidelines of McClellan's ALARA program.

- Auxiliary uses of primary coolant have been analyzed by the applicant. The uses are acceptable and there is reasonable assurance that the auxiliary use of primary coolant will not affect the ability to cool the reactor core properly.

- There is reasonable assurance that credible and postulated malfunctions of the cooling system will not lead to uncontrolled loss of primary coolant, radiation exposures of personnel, or release of radioactivity to the unrestricted environment that exceeds the requirements of 10 CFR Part 20.

- The Technical Specifications, including testing and surveillances, provide reasonable assurance that the cooling system will operate as designed and be adequate for normal reactor operations as described in the SAR.

6 ENGINEERED SAFETY FEATURES

6.1 Emergency Core Cooling System

An analysis of safety considerations with regard to raising the power of the MNRC reactor from 1 MW to 2 MW, with the possible addition of a BNCT facility, identified the Emergency Core Cooling System (ECCS) as an ESF. This requirement for an ECCS involves an ECCS that can supply water to the reactor core if a leak in the reactor tank results in the core being uncovered. A rupture large enough to result in a very rapid loss of tank water could occur if there were a breach in the 3 foot x 3 foot (1 m x 1 m) space created in the containment shield to accommodate the BNCT facility. Water would be reintroduced into the reactor tank by manually connecting a hose between the domestic water supply and the aluminum piping leading to the reactor (Figure 6.1). The domestic water supply and hose are on the roof area outside the reactor room. All hose connections are quick-connectors and require no tools to attach. The aluminum piping that goes to the reactor core area has a nozzle positioned approximately 0.608 m (2 ft) above the reactor core so that water will be dispersed over the top of the reactor core (Ref. 4). The nozzle rests on a 0.608-m (2-ft) high aluminum chimney that surrounds the upper grid plate.

The ECCS system is actuated by operations personnel who use the following indicators to determine that water is leaking from the reactor tank:

- reactor tank low-level alarm
- primary system low-flow alarm
- demineralizer low-flow alarm
- reactor room radiation area monitor alarm
- reactor room radiation criticality alarm and evacuation alarm
- reactor room and stack continuous air monitor alarms
- visual indication of water loss using the remote television camera

The ECCS contains pressure and flow gauges to verify that sufficient water flow is maintained for the duration of its use. Chapter 13 of this SER discusses the loss-of-coolant accident (LOCA).

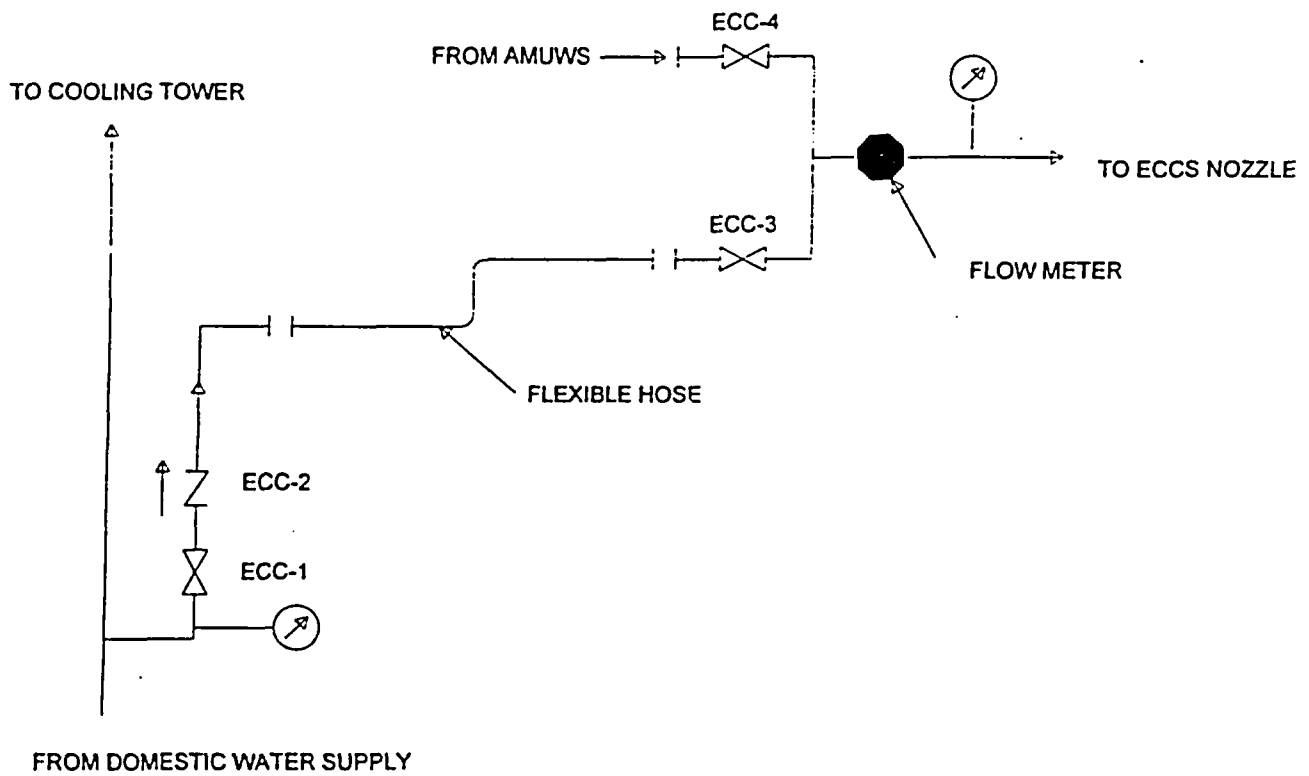

Figure 6.1

Emergency Core Cooling System

6.2 Ventilation System

The normal operation of the ventilation system is discussed in Chapter 9 of this SER. However, the ventilation system has design features that are incorporated for accident mitigation that make the system an ESF.

The reactor room air-handling system (Figure 6.2) contains isolation and recirculation capability. This feature is activated when the continuous air monitor (CAM) that monitors the air in the reactor room for radioactive iodine, beta/gamma particulates, and noble gases exceed preset limits. If the limit is exceeded, four simultaneous automatic actions are initiated. First, the damper in the exhaust duct leading to the stack is closed and the damper in the duct leading from the exhaust back to the reactor room is opened. This action stops the air flow to the exhaust stack and the release of radioactive material. Second, the dampers to and from the high-efficiency particulate air (HEPA) filter shut and the dampers to and from a moisture separator, standard filter, HEPA filter, and two activated charcoal filters open. This action allows air to be filtered for particulate and iodine contamination. Third, AC-1, the reactor room normal air recirculating and makeup system, is shut down and the damper in the makeup duct is closed. This action prevents the reactor room from being pressurized by the unit. Finally, AC-2, the preparation area and equipment room air recirculating and makeup system, is prevented from being shut down. This action maintains the area next to the reactor room at a slightly positive relative pressure and reduces the potential for contamination spread. The HEPA and activated charcoal filters have bag-out provisions for contamination control should the filter become contaminated and require changeout.

During normal operation, the reactor room ventilation system bypasses the three-stage particulate charcoal filters. The normal reactor room exhaust path is through a pre-filter and a HEPA filter and out the stack. During an accident (e.g., a LOCA) the radiation levels in the reactor room could cause the reactor room CAM to alarm. A CAM alarm would automatically redirect the reactor room exhaust path through a dehumidifier, pre-filter, HEPA filter, and three charcoal filters and back to the reactor room. A ventilation damper control switch on the temperature control panel (TCP) enables the reactor operator to override the damper controls and continue exhausting air from the reactor room through the normal exhaust path, within specific procedural requirements. This action would be taken during the LOCA when air cooling

of the reactor room is required. The controls for the air-handling system are in the reactor control room on the TCP.

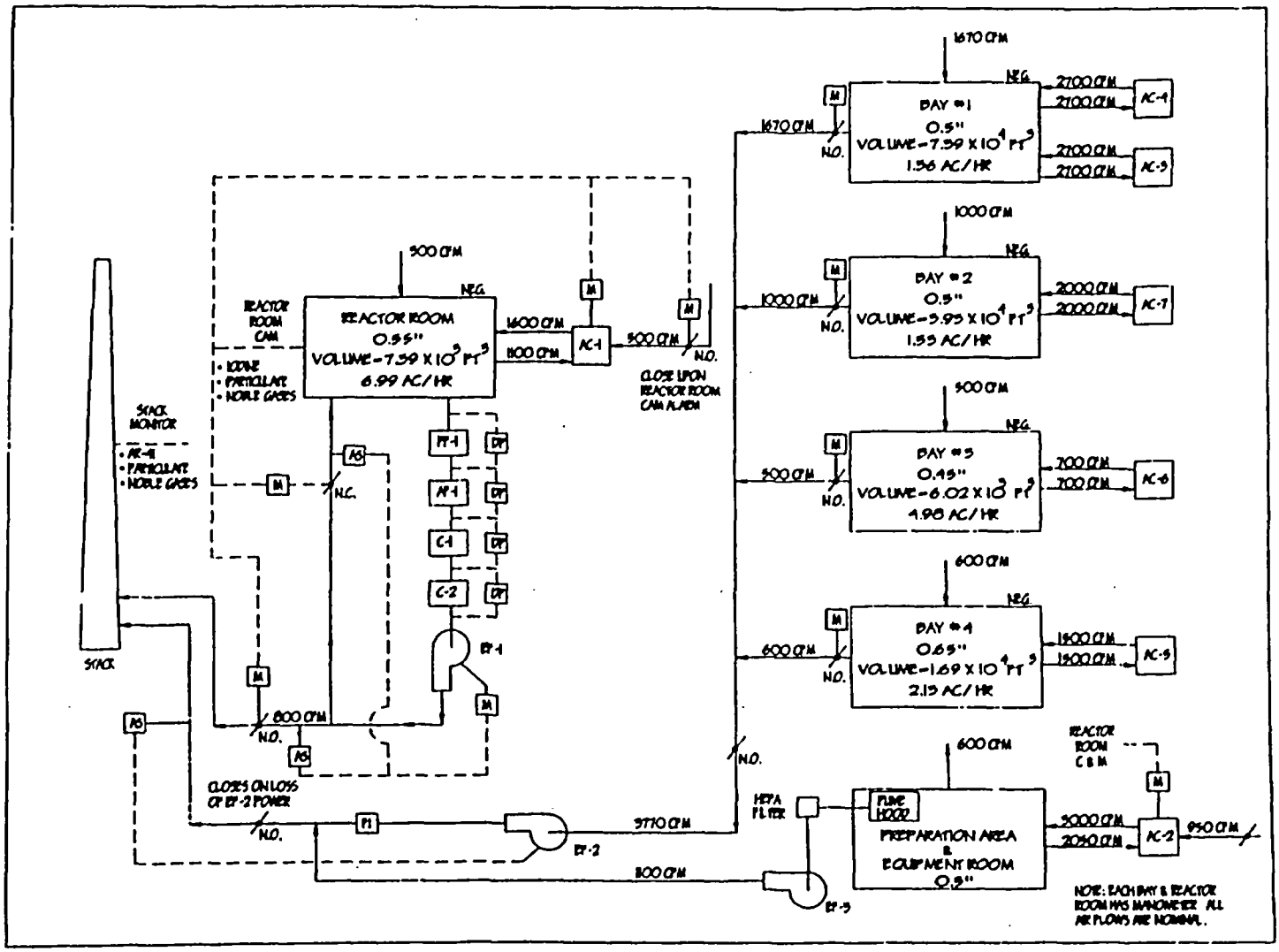

Figure 6.2

Reactor Room Air-Handling System

The hood in the sample preparation/pneumatic transfer area exhausts through a HEPA filter. It also maintains an inflow of air through the hood to prevent the release of radioactivity into the surrounding area.

6.3 Conclusions

On the basis of an evaluation of the information presented in the applicant's SAR and the staff's analysis in Chapter 13 of this SER, the staff concludes as follows:

- The design of the ECCS is adequate for operation at the required flow rate and time as determined by the accident analysis. The design also considered the availability of normal electrical power and coolant sources and provided for alternative sources, if necessary. The ECCS will not interfere with normal operations and will not prevent safe reactor shutdowns.

- As designed, the functioning of the ECCS reasonably ensures that a LOCA at the McClellan facility would not subject the public, the environment, or facility personnel to unacceptable radiological exposure.

- The ECCS was designed (and TS requirements and procedures for periodic and surveillance and testing were developed) to ensure its operability and availability.

- The ventilation system can limit the spread of radioactive contamination, and provide the means for isolating, recirculating, and filtering the air in the reactor room.

7 INSTRUMENTATION AND CONTROL

7.1 Introduction

The I&C system for the MNRC reactor is a computer-based system incorporating the use of a multifunction, NM-1000 microprocessor-based neutron monitoring channel developed by GA and an NPP-1000 analog-type neutron monitoring channel. The NM-1000 system provides multiple indications of neutron flux levels and a linear scram function from a single fission-type detector. The NPP-1000 system provides a second safety channel for redundancy (percent power with scram). In the pulse mode of operation, the data acquisition computer (DAC) makes a gain change in the NPP-1000 safety channel to provide peak flux and energy release indicators, along with a peak pulse power scram. The NM-1000 is automatically bypassed once a pulse has been initiated.

The control system logic is contained in a separate control system computer (CSC) with a color graphics display. Although information from the NM-1000, NPP-1000, and fuel temperature channels are processed and displayed by the CSC, each is direct-wired to its own output display and the safety channel connects directly to the reactor protective system scram circuit. Therefore, signals to the scram circuits are not processed by the data acquisition computer or the control computer. Nuclear information goes directly from the detectors to either the NM-1000 or NPP-1000 to be processed. The subsequent signals connect directly to the scram circuit switches. Fuel temperature information goes directly to "action pack modules" for amplification and then to the scram circuit switches. The ability of this configuration to meet the intent of protection system requirements for reliability, redundancy, and independence for TRIGA-type reactors was previously accepted by the NRC (Refs. 5, 6 and 7).

The NM-1000 nuclear channel has the multifunction capability to provide overpower safety (scram) action as well as neutron monitoring over a wide power range from a single detector. These functions are as follows:

- percent power with scram (two safety channels)
- wide-range log power (below source level to full power)
- power rate of change (reactor period)
- multi-range linear power (below source level to full power)

The NPP-1000 system provides the redundant percent power safety channel with scram. The amplified signal from this channel goes directly to the direct-wired percent power indicator and the scram circuit switches. The NPP-1000 system is an upgrade of GA systems that were in use in TRIGA installations worldwide for many years. The nuclear detector for the NPP-1000 is an uncompensated ionization chamber. NPP-1000 systems are used at several TRIGA reactors (e.g., Sandia National Laboratory, the Armed Forces Radiobiology Research Institute, the University of Texas, and the GA facility in San Diego). A block diagram of the MNRC TRIGA reactor I&C system is shown in Figure 7.1.

7.2 Reactor Operating Controls

The MNRC reactor is designed to be operated in four modes; (1) manual, (2) automatic, (3) square wave, and (4) pulse. The manual and automatic modes are characterized by steady-state reactor conditions. The square-wave and pulse modes involve the conditions implied by their names and require the use of the transient (pulse) rod. The manual and automatic reactor control modes are used for reactor operation from source level to 100 percent of licensed power. The manual mode is used for reactor startup and changes in power level, while the automatic mode is used for steady-state operation.

A captive keyswitch, magnet power (on the rod control panel), controls the current to the control, and transient rod magnets. This keyswitch must be in the "On" position to withdraw any of the control rods. Whenever the magnet current is removed, this switch must be turned to the "Reset" position and then back to the "On" position for the magnet current to be restored. This keyswitch causes "Reactor On" signs to be illuminated throughout the MNRC. Manual rod control is accomplished by pushbuttons on the rod control panel. An automatic interlock prevents raising more than one control rod at a time, except for servo controlled rods in the automatic mode. There is no interlock to inhibit inserting the control rods.

Automatic reactor control can be obtained by switching from manual operation to automatic operation on the mode control panel. All instrumental, safety, and interlock circuitry described for manual operation apply to operation in automatic mode. The regulating rod, control rod 1, control rod 2 or any combination can automatically control the reactor power in accordance with

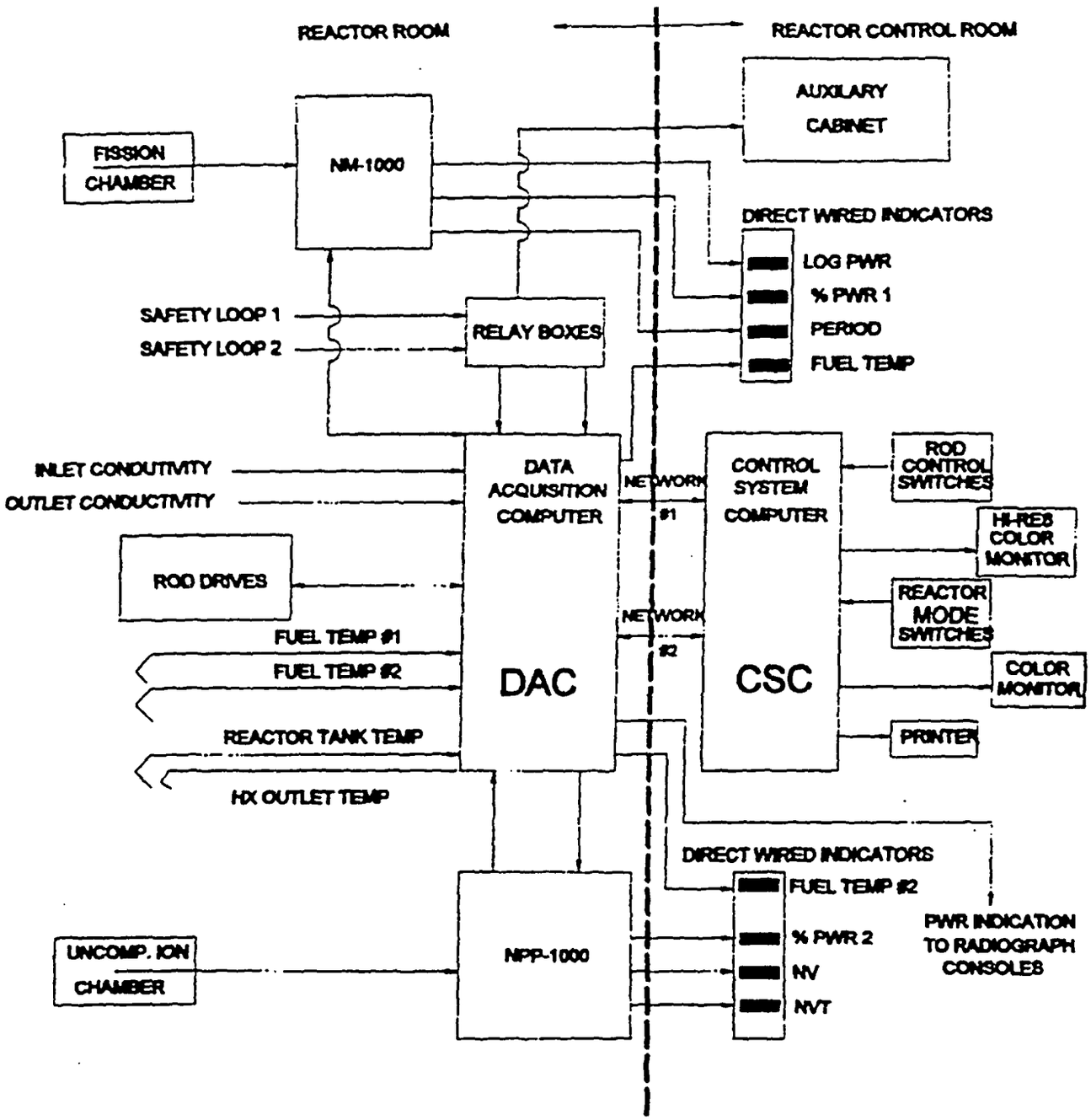

Figure 7.1
Block Diagram of Instrumentation and Control System

the power demand set by the operator with thumb-wheel switches. When reactor power, as measured by the multi-range channel, is above or below the power demand, the servocontrolled rod(s) are moved on a fixed preset period to return reactor power to the demand level. There are no alarms associated with the servocontrol system.

Manual rod control is accomplished by pushbuttons on the rod control panel. The top row of pushbuttons (magnet) is used to interrupt the current to the rod drive magnet. If the rod is above the down limit, it will fall back into the core and the magnet will automatically drive to the down limit, where it will again contact the armature.

The middle row of pushbuttons (up) and the bottom row (down) are used to position the control rods. Pressing the pushbuttons causes the control rod to move in the direction indicated (the mode control panel is shown in Figure 7.2, and the rod control panel is shown in Figure 7.3.) Interlocks prevent the movement of the rods in the up direction under the following conditions:

(1) scrams not reset
(2) source level below minimum count
(3) two up switches depressed at the same time
(4) mode switch in the pulse mode
(5) mode switch in the automatic position (servo controlled rod(s) only)
(6) square wave mode-switch depressed or lighted

The square-wave mode can be used to raise reactor power to a desired level quickly. In the square-wave operation, the reactor is first brought to criticality below one KW in the manual mode, leaving the transient rod partially in the core. The desired power level is set by the reactor operator using the power demand selector on the mode control panel. All steady-state instrumentation is in operation. The transient rod is ejected from the core by means of the transient rod "Fire" pushbutton on the rod control panel. When the power level reaches the demand level, the control system shifts to the automatic mode.

Reactor control in the pulsing mode is normally achieved by manually establishing criticality at a power level below 1 KW in the steady-state mode. This is accomplished using the control rods, with the transient rod left either fully or partially inserted. The pulse mode selector switch on the

mode control panel is then pressed. The "Mode Selector" switch automatically causes the DAC to make a gain change in the NPP-1000 safety channel to monitor and record peak power and total pulse energy release, as well as to provide a peak pulse power scram. The pulse is initiated by activating the "Fire" pushbutton, which causes ejection of the transient rod. Once a pulse has been initiated and it is detected by the DAC, the NM-1000 safety scram is bypassed. Pulsing is initiated from either the critical or subcritical reactor state.

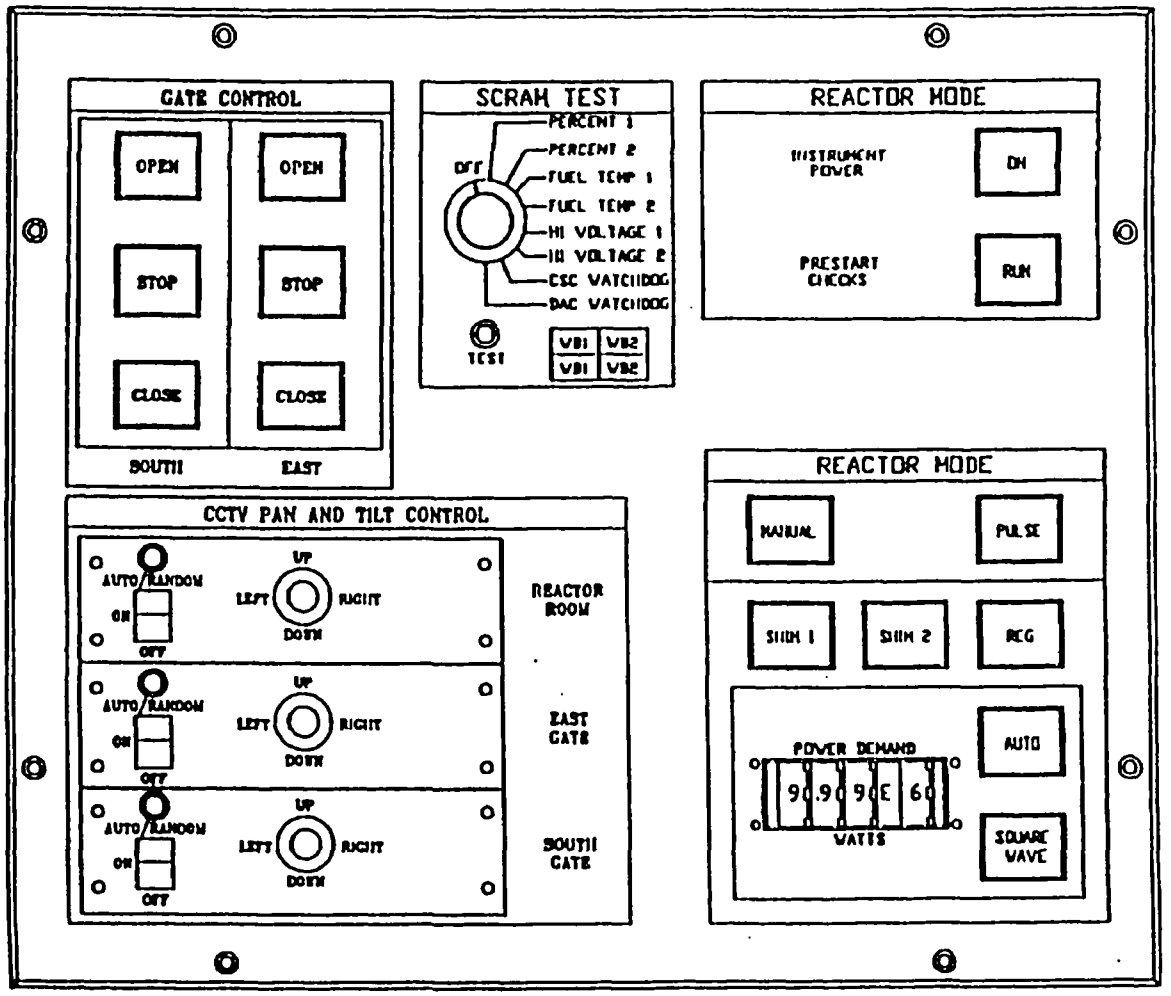

Figure 7.2

Typical Mode Control Panel

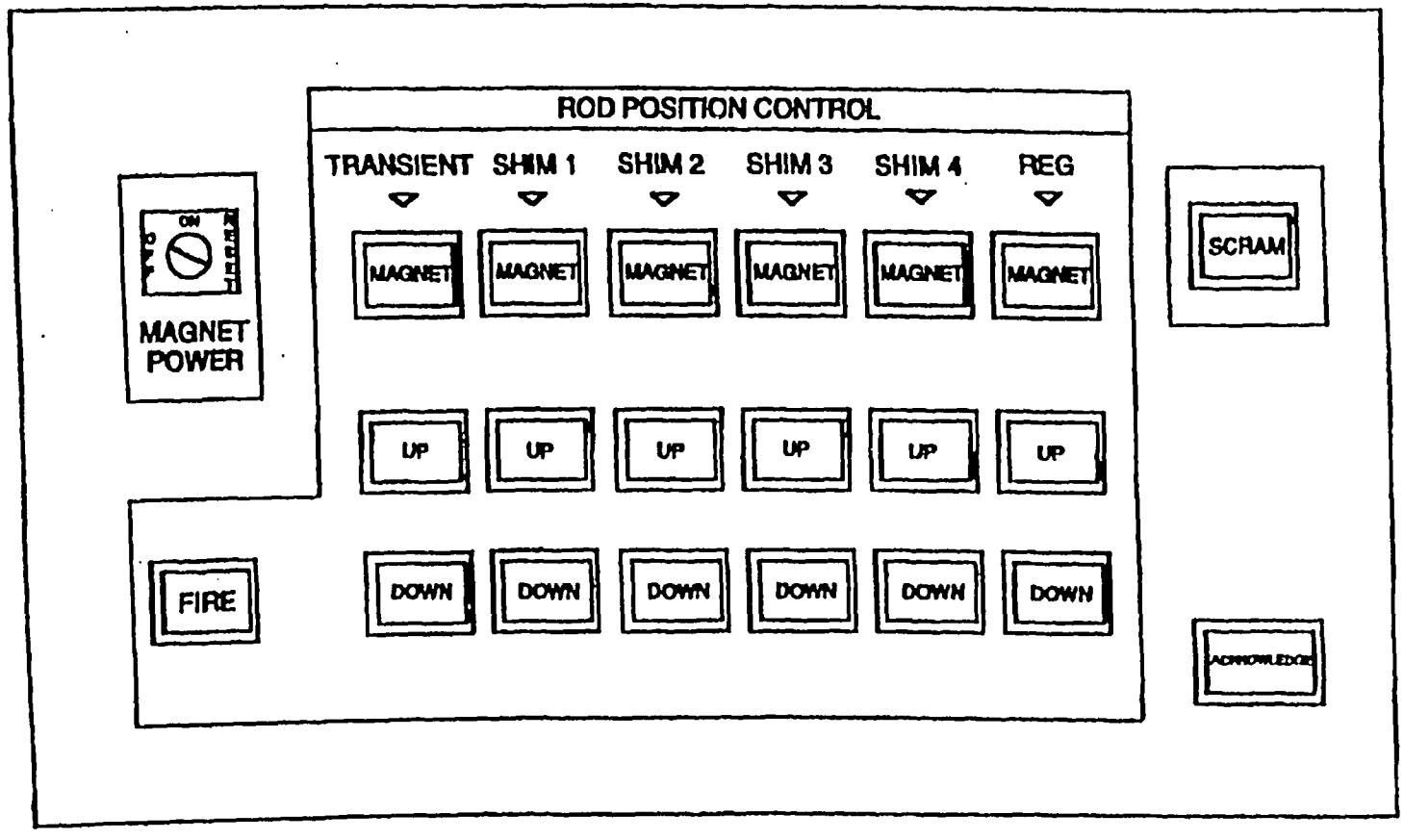

Figure 7.3
Typical Rod Control Panel

7.3 Cathode-ray Tube Displays

Safe operation of the reactor is aided by two cathode-ray tubes (CRT), which display reactor and facility conditions. The first CRT displays linear power, log power, percent power from both safety channels, rod positions, fuel temperature and tank water temperature. The CRT has a scram/warning window that shows the cause of the scram/warning when a scram occurs or a predetermined limit is reached.

The second CRT can display one of three categories of information, selected by the operator; (1) scram, (2) warning, and (3) status. If the scram category is selected, the parameters in Table 7.1 that have exceeded the scram setpoints will be displayed in the order in which the setpoints were exceeded (i.e., first-in). The scram indication remains until it has been cleared.

Table 7.1

Scram Window Display

1.	* Scram - Console Manual	14.	* Scram - NPP-1000 Power Hi
2.	* Scram - Reactor Room Manual	15.	* Scram - NM-1000 Power Hi
3.	* Scram - Bay Rip Cord	16.	* Scram - NM-1000 Hi Voltage Lo
4.	* Scram - Fuel Temp #1 Hi	17.	* Scram - NPP-1000 Hi Voltage Lo
5.	* Scram - Fuel Temp #2 Hi	18.	Scram - Keyswitch Off
6.	* Scram - External #1	19.	Scram - Please Log In
7.	* Scram - External #2	20.	Scram - Net Fault, Please Reboot
8.	Scram - CSC DIS64 Timeout	21.	Scram - Database Timeout
9.	Scram - DAC DID64 Timeout	22.	Scram - NM-1000 Comm Fault
10.	* Scram - CSC Watchdog Fault	23.	Scram - NM-1000 Data Error
11.	* Scram - CSC Watchdog Timeout	24.	Scram - DOM32 Fault
12.	* Scram - DAC Watchdog Fault	25.	Scram - A1016 #1 Fault
13.	* Scram - DAC Watchdog Timeout	26.	Scram - A1016 #2 Fault

* Scrams required by the TSs

If the warning category is selected, the parameters in Table 7.2 that have exceeded the warning setpoint are displayed.

Table 7.2

Warning Window Display

1.	Pulse Not Detected	23.	Demineralizer RAM
2.	Demand Power Not Reached	24.	Equipment Area RAM
3.	High IC-Net Comm Fault	25.	Staging Area #1 RAM
4.	Low IC-Net Comm Fault	26.	Staging Area #2 RAM
5.	Power Too Hi to Pulse	27.	Staging Area #4 RAM
6.	Trans Rod Air Must Be Off	28.	Rx Room Particulate
7.	Period Too Short to Pulse	29.	Rx Room Noble Gas
8.	Line Printer Not On Line	30.	Rx Room Iodine
9.	Rod Withdrawal Prohibit	31.	Bay Particulate
10.	Rx Tank Return Temp Hi	32.	Stack Particulate
11.	Magnet Supply Volt Grounded-Hi Side	33.	Stack Noble Gas
12.	Magnet Supply Volt Grounded-Low Side	34.	Stack Argon
13.	Primary System Flow	35.	Bay Argon
14.	Demin System Flow	36.	Rx Room CAM Fault
15.	Secondary System Flow	37.	Stack CAM Fault
16.	Demin Inlet Condtvty	38.	Bay CAM Fault
17.	Demin Outlet Condtvty	39.	Rx Room CAM Alert
18.	Rx Tank Water Level Hi	40.	Stack CAM Alert
19.	Rx Tank Water Level Lo	41.	Rx Room CAM Alert
20.	Cooling Tower Water Level Hi	42.	Stack CAM Alarm
21.	Cooling Tower Water Level Lo	43.	Fire in DAC
22.	Rx Room RAM		

The third category that may be selected is System Status. The current reading of the parameters listed in Table 7.3 is displayed.

Table 7.3

Status Window Display

Primary System Flow	000.0 gpm	Staging Area #1 RAM	000 mR/hr
Secondary System Flow	000.0 gpm	Staging Area #2 RAM	000 mR/hr
Demin System Flow	00.0 gpm	Staging Area #4 RAM	000 mR/hr
Demin Inlet Condtvty	0.0μMHOS	Rx Room Particulate	0.0e+0 cpm
Demin Outlet Condtvty	0.0μMHOS	Rx Room Noble Gas	0.0e+0 cpm
Rx Tank Temp	00.0 C	Rx Room Iodine	0.0e+0 cpm
Hx Outlet Temp	00.0 C	Stack Particulate	0.0e+0 cpm
Hx Inlet Temp	00.0 C	Stack Noble Gas	0.0e+0 cpm
Rod Drop Timer	0.00 sec		
Reactor Room RAM	000 mR/hr	Stack Argon	0.0e+0 cpm
Demineralizer RAM	000 mR/hr	Bay Particulate	0.0e+0 cpm
Equipment Area RAM	000 mR/hr	Bay Argon	0.0e+0 cpm
One Kilowatt Interlock	Yes	Rod Withdrawal Prohibit	No

7.4 Evaluation of Instrument and Control System

7.4.1 Hardware and Systems Assessment

The staff evaluated the control console manufactured by GA to determine if it had vulnerabilities that might compromise its ability to present accurate information to the operator and provide scram signals when required. The staff did not assess the reliability of the nonsafety-related controls. Issues investigated included single failure, environmental qualification, seismic qualification, power supplies, electromagnetic interference (EMI), failure modes and effects, reliability, error detection and independence.

The primary review criteria for the instrument and control systems for research reactors when this review was performed was presented in ANSI/ANS 15.15 (1978) "Criteria for the Reactor Safety Systems of Research Reactors." The McClellan instrument and control system meets the ANSI/ANS 15.15 requirements. The staff performed this evaluation also using criteria that apply to current nuclear power plants. However, the TRIGA design has an inherent reactivity insertion safety feature and generates minimal decay heat, thus reducing the probability of fuel damage to a minimal amount. The staff has concluded that these power plant criteria are guidelines and need not be followed strictly.

7.4.1.1 Environmental and Seismic Qualification

The new control system is installed in the control room and the reactor room. The staff considers the reactor room to be a mild environment when compared to power plant requirements, that is, the systems are designed to function reliably under anticipated environmental conditions of temperature, pressure, humidity, and corrosive atmospheres. Therefore, the entire system can be considered to be in a mild environment. The system was constructed in standard commercial enclosures suitable for a mild environment. The testing and operations have not revealed any problems regarding temperature or humidity. The new system should not be unduly susceptible to temperature or humidity and is acceptable to the staff.

Although the NRC has not promulgated requirements for the seismic qualification testing of research reactor control equipment, the staff evaluated the equipment to determine general ruggedness. The equipment is mounted in a commercial quality fashion which should prevent the components from moving significantly within the console and racks. In this TRIGA reactor,

an inadvertent scram does not present a significant challenge to reactor safety systems because a scram consists of the removal of current to the control rod magnets allowing the control rods to drop into the core by gravity. No other equipment is required to maintain the reactor in a safe shutdown condition. The primary concern remaining would be that the chatter of relay contacts could prevent a scram when required. The safety system scram circuits for this system are designed to scram on failure (which includes contact chatter.) Therefore, the staff concludes that the system is acceptable.

7.4.1.2 Electromagnetic Interference

The staff evaluated the new equipment to determine if common mode EMI could disable more than one system at a time. The design characteristics of the TRIGA reactor do not allow an inadvertent scram to present a significant challenge to safety systems (although it might hinder operations such as disrupting an experiment).

The TRIGA uses industrial isolators, which prevent conducted EMI from being transmitted between the control and safety mechanisms. The neutron flux signal cables are shielded to prevent the effect of radiated EMI. Previous experience with similar equipment provided by several different vendors at other facilities has indicated that if EMI causes any perturbance in the system, it will most likely cause a scram, which is not a safety concern. Therefore, the staff concludes that EMI should not prevent a scram when required and that the design is acceptable.

7.4.1.3 Power Supplies

The power supplies for the system are buffered to reduce the effect of minor fluctuations in the line power. The scram circuits for the new system are designed to scram when power is lost to them. The NPP-1000 ia an analog device and will respond to power fluctuations similar to the existing analog equipment. The digital NM-1000 nuclear power channel uses a random access memory (RAM) with alternate DC battery power to store constant data during a loss of power. The NM-1000 has self-diagnostic circuits and also has a watchdog timer circuit which places the NM-1000 in a tripped condition and scrams the reactor if power fluctuations prevent the software from properly operating. The NM-1000 Software Functional Specification and Software Verification Program (March 1989) describes the tests performed on the NM-1000 to verify that the system returns to proper operation after the power is restored. The staff finds this acceptable.

7.4.1.4 Failure Modes and Effects

Scram safety circuit analyses were performed to identify the various ways in which the reactor safety system could fail. These included the following:

(1) physical system failure (e.g., wire breaks, shorts, ground fault circuits)
(2) limiting safety system setting failure (failure to detect)
(3) system operable failure (loss of monitoring)
(4) computer/manual control failure (automatic and manual mode)

These analyses were performed using fault trees to predict a failure to scram for various failure modes. Based on the analysis, it was concluded that a failure of all safety systems and therefore failure to scram was extremely unlikely. All failures attributable to the unique failure modes of the software of the NM-1000 were evaluated. The staff has reviewed the analysis of the failure modes and effects of the new system and finds this acceptable.

7.4.1.5 Independence, Redundancy, and Diversity

The staff reviewed the data link between the safety channels and the nonsafety systems. The safety channels provide hard-wired scram inputs and are also directly wired to independent indicators on the control console. The operators receive information from the analog NPP-1000 power monitor and the digital NM-1000 monitor. The information is displayed on both direct wired bar graphs and on a graphic CRT. The safety channels also provide inputs to the non class 1E DAC through isolators. The isolators used have not been tested for the maximum credible faults that the staff requires for isolators used in power plants. However, the manufacturer has tested them to standard commercial criteria. The staff concludes that the use of isolators tested to standard commercial criteria is acceptable for the MNRC TRIGA reactor. The DAC is then connected through redundant high-speed serial data trunks to the non class 1E CSC which interfaces with the operator by controls, a keyboard, and CRT displays. The CSC would not meet the independence requirements of a power plant because the CSC does not interface with the safety channels. However, the staff concluded that this interface was not necessary for the current application at MNRC.

The scram circuit has a fail safe design using automatic and manual contacts which open to remove power to the control rod magnets. Redundant fuel temperature inputs are provided to the scram circuit at the MNRC facility. Redundant power level inputs to the scram circuit are also provided.

The analog and digital neutron monitors and the watchdog scram function provide additional diversity and redundancy to the scram system. The system as installed meets most of the requirements of IEEE-279-1971, "Criteria for Protection Systems for Nuclear Power Generating Stations," and IEEE-379-1977, "Application of the Single-Failure Criteria to Nuclear Power Generating Station Class 1E Systems."

The staff has concluded that the MNRC control system design maintains an acceptable level of independence, redundancy, and diversity for the MNRC TRIGA reactor.

7.4.1.6 Testing and Operating History

Both GA and the Armed Forces Radiobiology Research Institute (AFRRI) have extensively tested the new system and made a significant number of changes to the design during the testing and initial operation of the new system. The staff has reviewed the problems discovered during testing of the system and concluded that the resolutions appear acceptable. The staff concludes that the installation of equipment having readily available spare parts improves operability and safety. The new self-diagnostic feature allows continuous online testing and reduces the possibility of undetected failures.

7.4.2 Software Assessment

7.4.2.1 Criteria

The staff requires an approved verification and validation (V&V) plan for software that performs a safety function or provides information to the operator. At MNRC, the NM-1000 provides inputs to the scram circuit and to the rod withdrawal prevent interlock system block function. The staff reviewed GA's program for developing the NM-1000 software to determine if the V&V plan was acceptable. The staff compared the GA V&V plan to RG 1.152, "Criteria for Programmable Digital Computer Software in Safety-Related Systems at Nuclear Power Plants," which endorses ANSI.IEEE 7-4.3.2 1982, "Application Criteria for Programmable Digital

Computer Systems in Safety Systems of Nuclear Power Generating Stations." The staff has concluded that this standard is appropriate for use in reviewing research reactor software.

7.4.2.2 Verification and Validation Plan

The staff audited the V&V documentation provided by GA. The NM-1000 at the MNRC TRIGA is directly wired into the scram circuit, and therefore requires highly reliable software to perform its safety function. To assess the NM-1000 software developed by GA, the staff assessed the methodology and procedures used to develop the software by reviewing the V&V documentation through the development process.

Verification and validation are two separate but related activities performed throughout the development of software. Verification is the process that determines if the requirements of one phase of the development cycle are consistently, correctly, and completely transferred to the next phase of the cycle (i.e., to determine if the requirements are fulfilled.)

Validation is the testing of the final product to ensure that performance conforms to the requirements of the initial specification. The need for V&V arose because software is very complex and prone to human errors of omission, commission, and interpretation. V&V provides for an independent verifier to work in parallel with, but independent of, the development team to ensure that human errors do not hinder the production of safety software that is reliable and testable.

In executing V&V, certain principles have proven over time to be very effective in software programs:

- well defined systems requirements expressed in well written documents
- development methodology to guide the production of software
- comprehensive testing procedures
- independence of the V&V team from the development organization

These principles comprise the foundation from which to apply the applicable criteria for software evaluations of Class 1E safety systems. These principles were used by the staff as guidance in the following review areas.

7.4.2.3 Independence

The independence of the verifier is a key ingredient in an effective verification process. Sorrento Electronics developed the original software for the NM-1000. After GA obtained the rights to market the NM-1000 for research reactors, it used a software consultant to modify the software. After many changes had been made, GA hired another contractor. Each contractor provided an additional level of independent review for the original design. Although the requirements imply a concurrent review, the staff finds that the verification was sufficiently independent and is acceptable for research reactors.

7.4.2.4. Validation Testing

The validation testing must be done by a team that did not help design or implement the software product. GA used the neutron monitoring system acceptance test procedure as part of the validation testing. The staff also reviewed substantial additional validation testing performed at the AFRRI facility. The staff did note a functional description of unknown date which included samples of the computer code. Though the developers knew the specific functions which the NM-1000 was to perform, these functions were never documented which allows possibilities for omission when preparing test procedures. Upon request from the staff, GA provided functional specification E117-1001 "NM-1000 Software Functional Specification," dated March 1989, which lists in detail the functions performed by the NM-1000. This specification included a system of cross-reference by which the vendor verified that each specific functional requirement had been tested. The staff finds that this validation testing and verification is acceptable.

7.4.2.5 Discrepancy Resolution

Each V&V program should include a process by which to identify, record, correct, and resolve discrepancies uncovered during development. The resolution of a discrepancy must be reflected in all applicable documents, including the source code, the software design specification, the software requirements, and the original systems specification. The staff reviewed discrepancies and other comments provided to GA by the Console Owners Group and found that the process and resolution were documented and appeared adequate. When discrepancies prompted GA to modify the code, GA added to the code notation a description of

the changes and the corresponding rationale. The staff finds that GA used acceptable methods to resolve discrepancies.

7.4.2.6 Design Approach

The primary software specification provides the foundation for sound development and effective V&V. The individual requirements in the specification for any software system describe the manner in which the software is to behave in any circumstance. The specification must be reliable and testable. A reliable specification exhibits the following characteristics:

- Correct — Each requirement of the safety function has been stated correctly.
- Complete — All of the requirements for the safety function are included.
- Consistent — The requirements are complementary and do not contradict each other.
- Feasible — The requirements can be satisfied with available technology.
- Maintainable — The requirements will be satisfied for the lifetime of the equipment.
- Accurate — The requirements include the acceptable bounds of operation.

The staff reviewed the design approach with GA. The early development is not well documented because the product was sold to GA without all of the supporting information. Though the staff finds that the design approach for the NM-1000 since inception was erratic, the staff finds the recent developmental work and the design approach acceptable, because it appears to be better organized and controlled.

7.4.2.7 Software Evaluation

The software development plan for the NM-1000 indicates that GA developed the software for a very specific design goal and that the designers knew the application and the basic requirements for the hardware and software. However, GA did not develop a plan to specify the individual steps in the design project. To verify that each design requirement had been tested, GA developed the NM-1000 software verification program E117-1002, "NM-1000 Software Verification Program" dated March 1989. The staff also reviewed working copies of the NM-1000 design input, which demonstrated that the design team clearly understands the functional requirements. The staff concludes that the software should perform its intended safety function as required.

7.4.2.8 Operator Task Analysis

In reviewing the documents, the staff found that GA had not provided a formal task analysis to support the design of the operator interface. After the equipment and software were substantially designed, the functional requirements and working level descriptions did include the operator task requirements. The staff concluded that, through the V&V process, GA had specified the requirements and incorporated them in the design. Therefore, the operator task analysis is acceptable.

7.5 Control Rods

Reactor core loadings use fuel-followed control rods (i.e., control rods that have a fuel section below the absorber section). The uppermost section is a 16.51-cm (6.5-in) long, air-filled void and the next 38.1 cm (15 in) form a solid boron carbide neutron absorber section. Immediately below the absorber is the fuel section which consists of 38.1 cm (15 in) of U-ZrH $_{1.7}$ (containing U-235 enriched to less than 19.7 percent). The weight percent of uranium in the fuel in the control rods is either 8.5, 20, or 30 depending on the core loading. The bottom section of the rod has an air-filled void approximately 16.51 cm (6.5 in) long. The fuel and absorber sections are sealed in a Type 304 stainless steel tube that is approximately 109.22 cm (43 in) long and has a diameter of 3.429 cm (1.35 in). The fuel-followed control rods and the stainless steel control rod pass through and are guided by holes (3.81-cm [1.5-in] diameter) in the top and bottom grid plates.

The transient rod is a sealed tube that is 112.395 cm (44.25 in) long and has a diameter of 3.175 cm (1.25 in). The tube contains solid boron carbide as a neutron absorber and air as a follower. The absorber section is 53.34 cm (21 in) long and the follower is approximately 58.42 cm (23 in) long. The transient rod passes through the core in a perforated aluminum guide tube. The tube receives its support from the safety plate and its lateral positioning from both grid plates. It extends above the top grid plate. Water flows through the guide tube by means of a large number of holes distributed evenly over its length. A locking device is built into the lower end of the tube assembly to prevent movement.

7.6 Control Rod Drive Assemblies

The control rods are positioned by five standard TRIGA electrically powered stepping motors and rack-and-pinion drives (Figure 7.4). One rod is designated as a regulating rod and used in

conjunction with an automatic power control circuit. All rod drives are exactly the same and normally operate at a nominal rate of approximately 60.96 cm/min (24 in/min), but the drive speed can be altered by changing the signal frequency to the stepping motors. (Very rigid facility administrative procedures have been established that must be followed before drive speeds can be changed.)

The rod drives are connected to the control rods through electromagnet armature systems and a connecting rod assembly. These assemblies contain a bolted connection at each end to accept the control rod at the bottom and the armature at the top. Removal of electrical power to a holding magnet allows gravity to drive the neutron poison section of that control rod into the core region of the reactor. The grid plates provide guidance for all control rods during operation of the reactor. No control rods can be inserted or removed by their motor drives through a sufficient distance to allow disengagement from the grid plates.

7.7 Transient Rod Drive Assembly

The MNRC adjustable fast transient rod drive (Figure 7.5) combines a standard TRIGA rack-and-pinion control drive (see above) and a standard TRIGA fast transient control rod drive, both of which have been slightly modified for operation in the MNRC reactor. (The lower barrel assembly is shorter and contains a slot on one side for the yoke assembly.) The entire assembly consists of the standard TRIGA control rod drive, the modified lower barrel and the bearing housing, and is rigidly bolted to a support which runs parallel to the transient rod air cylinder. This combination transient rod drive can be used to produce low-level (square wave) pulses and eject the pulse rod totally out of the core during a true pulse. This combination drive unit was chosen to take advantage of the extensive operating experience gained at other licensed TRIGA reactors (GA, University of Illinois, and the University of California at Irvine) on both the standard rack-and-pinion drive and on the standard fast transient rod drive. This combination drive unit was used extensively on pulsing reactors at the Japan Atomic Energy Research (JAERI) and Sandia National Laboratory.

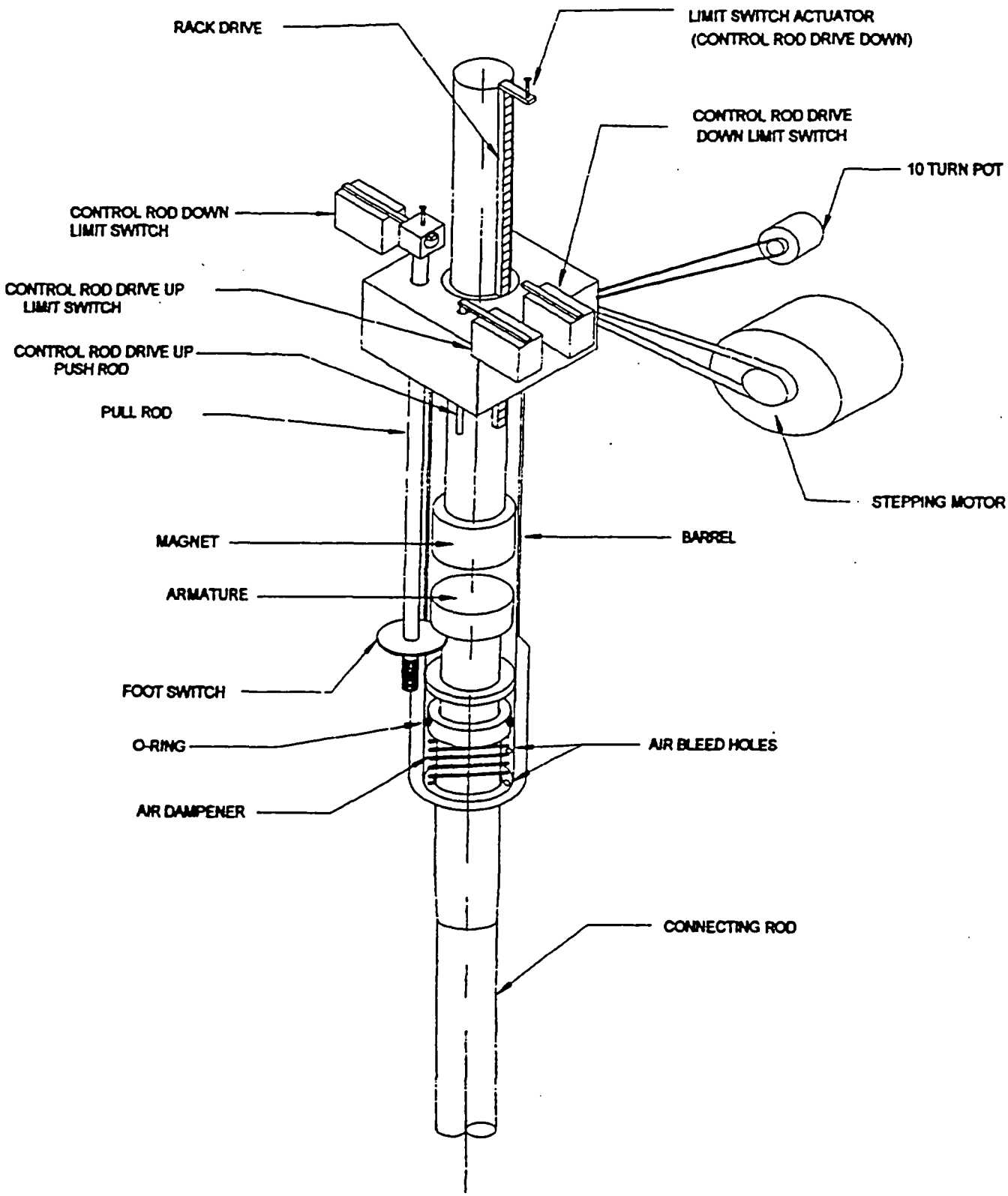

Figure 7.4

Rack-and-Pinion Control Rod Drive (Typical)

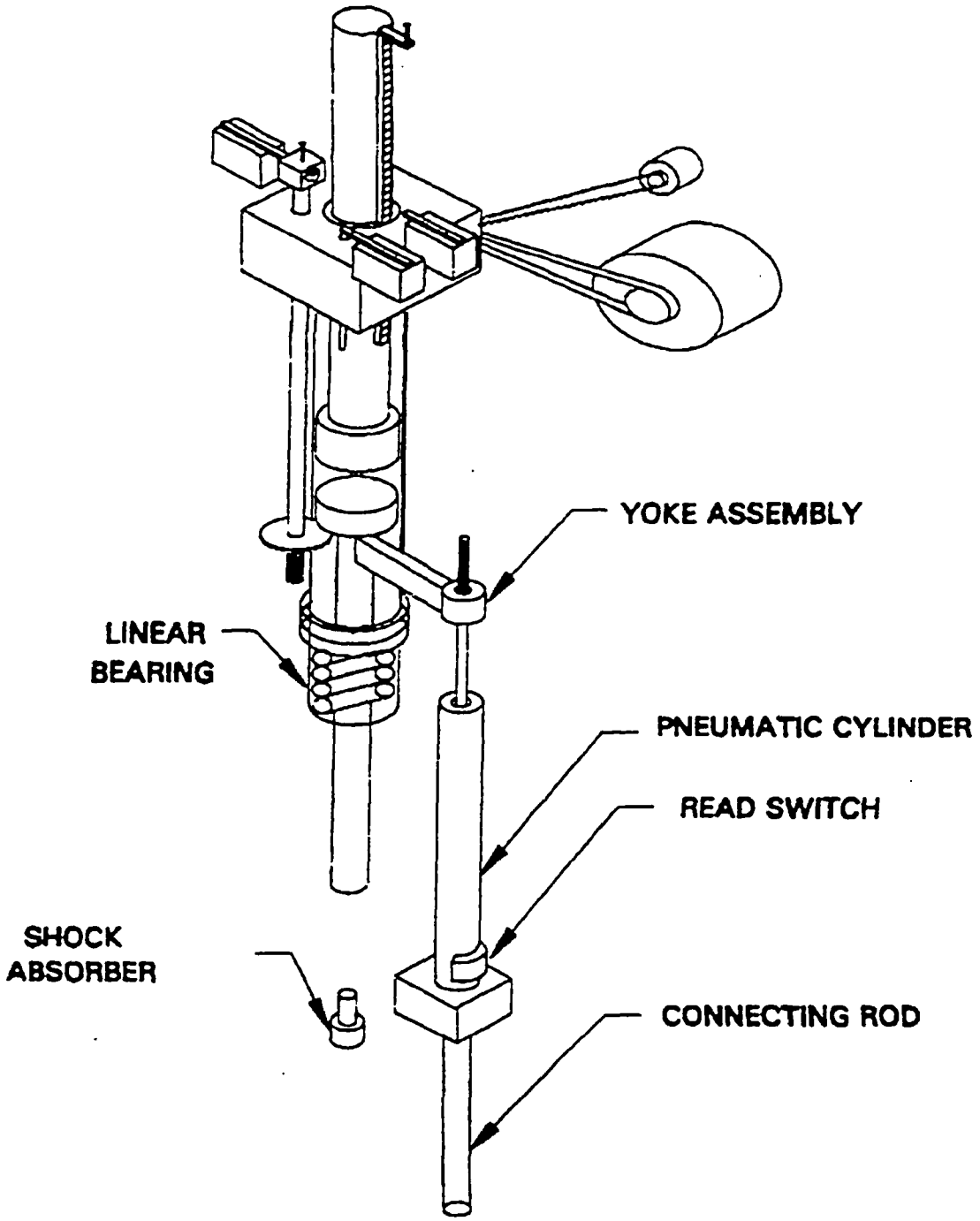

Figure 7.5

Adjustable Fast Transient Rod Drive Assembly

7.8 Reactor Interlocks Associated with Bay Shutters and Doors

In addition to the interlocks which prevent access to the bays when radiation levels are high (i.e., reactor on and bay shutters not closed), there are three types of inputs from bay safety devices to the reactor scram system. (These are the external scram inputs shown in Table 7.1.) The three types of scram inputs are received from limit switches located on the shutters, the bay doors, and from switches located at the ends of rip cords located in each bay. Each shutter, door, and rip cord has two independent signal devices. These devices and their installation are in accordance with requirements of the reactor safety system. The key features of these reactor scram devices are as follows:

- The reactor is either scrammed or cannot be operated if the shutter and the bay door are open

- The reactor is either scrammed or cannot be operated when the rip cord circuits have been activated

- Once activated, the rip cord circuit can only be reset from inside the bay.

7.9 Conclusions

On the basis of an evaluation of the information presented in the applicant's SAR, the staff concludes as follows:

- The applicant has shown that all nuclear and process parameters important to safe and effective operation of the MNRC nonpower reactor will be displayed at the control console. The display devices for these parameters are easily understood and readily observable by an operator positioned at the reactor controls. The control console design and operator interface are sufficient to promote safe reactor operation.

- The reactor control system can maintain the reactor in a shutdown condition, change reactor power, maintain operation at a fixed power level, and insert a pulse in accordance with reactivity amounts and rates as derived from the SAR analysis and in accordance with the TSs. The components and devices of the reactor control system are designed to sense all parameters necessary for facility operations with acceptable

accuracy and reliability and to transmit the information with high accuracy in a timely fashion.

- The reactor safety system is designed to maintain function or to achieve safe reactor shutdown in the event of a single random malfunction within the system. The reactor safety system is designed to prevent or mitigate hazards to the reactor or the escape of radiation, so that the full range of normal operation poses no undue radiological risk to the health and safety of the public, the facility staff, or the environment.

- The control console was designed for checking operability, inserting test signals, performing calibrations, and verifying trip settings. The availability and use of these features will ensure that the console devices and subsystems will operate as designed.

- The annunciator and alarm panels on the control console give assurance that systems important to adequate and safe reactor operation will function properly, even if the console does not include a parameter display.

- The locking system on the control console reasonably ensures that the reactor facility will not be operated by unauthorized personnel.

- The hardware design of the new GA console is acceptable for use in the MNRC TRIGA reactor. The software design in the CSC, DAC, and NM-1000 is acceptable because it will not prevent the safety functions of the direct wired scram circuit from performing their intended function of shutting down the reactor.

8 ELECTRICAL POWER

8.1 Main Power

The MNRC reactor receives its normal electrical power (Figure 8.1) through an underground primary 480/277 V, 3-phase, 3-wire distribution system from a nearby McClellan AFB facility. The interconnections between McClellan AFB and the MNRC are designed in accordance with the following codes and standards:

(1) National Electrical Code - National Fire Protection Association (NFPA)-70

(2) National Electrical Safety Code

(3) National Electrical Manufacturers Association (NEMA) Standards

The reactor and radiation instruments receive their power from a regulated power supply that meets a commercial grade standard.

8.2 Emergency Power

An uninterruptible electrical power supply (UPS) feeds the reactor I&C system and radiation monitoring equipment for the reactor. This system is designed to provide power to the reactor console and the translator rack for a minimum of 15 minutes after a loss of normal electrical power. The MNRC UPS also provides power to the air exhaust stack CAM and the six facility remote area monitors (RAMs) for a minimum of 4 hours after a loss of normal electrical power. The MNRC UPS is not needed for safe, automatic reactor shutdown or maintenance of safe shutdown conditions. It does, however, supply the necessary instrumentation permitting the operator to initiate and confirm complete reactor shutdown, rod positions, and power level. It also supplies radiation monitoring equipment with the power needed to determine radiation levels. Emergency lighting is supplied by battery-powered lighting units that activate when normal power is lost.

Each of two other MNRC systems (i.e., fire alarm and physical security) is equipped with its own UPS. The battery packs for both of these systems are capable of maintaining normal operations for 24 hours after a loss of normal power. In the event that normal electrical power is lost, a propane-fueled generator supplies electrical power to the AMUWS pump, TCP, reactor room ventilation fan (EF-1), and damper controls for the reactor room. A light on the TCP is

actuated when the generator is operating. The use of the AMUWS is not required for a period of up to about 4 hours following a LOCA (SER Chapter 13), since air cooling will maintain fuel temperatures below the safety limit during that time. The propane generator is tested monthly, and backup generators are readily available.

8.3 Conclusions

On the basis of an evaluation of the information presented in the applicant's SAR, the staff concludes as follows:

- The design bases and functional characteristics of the normal and emergency electrical power systems were reviewed, and the proposed systems are capable of providing the necessary range of services.

- The design and operating characteristics of the source of emergency electrical power are basic and reliable, ensuring availability if needed.

- The design of the normal and emergency electrical power systems will not interfere with safe facility shutdown or lead to reactor damage if the systems malfunction during normal reactor operation.

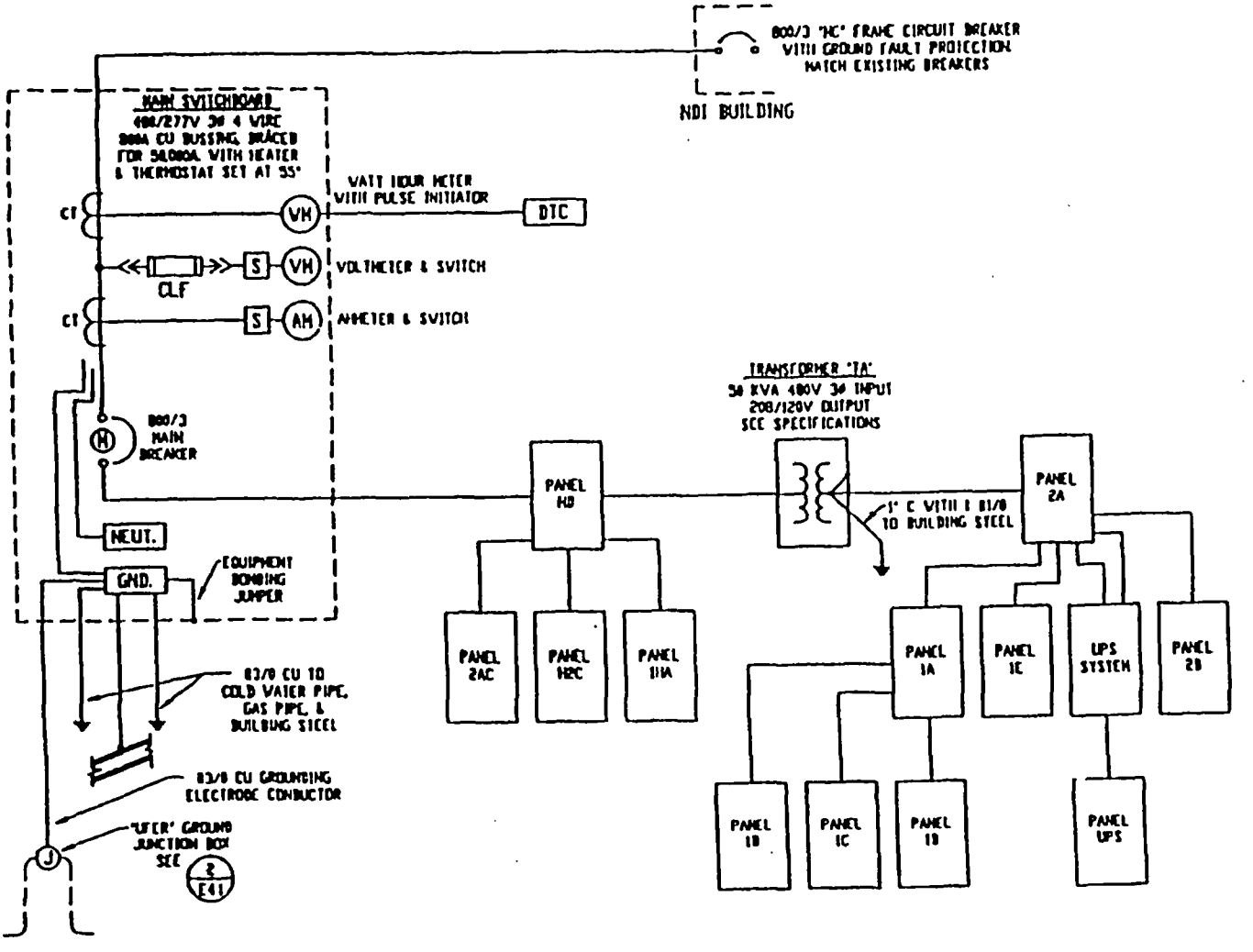

Figure 8.1

MNRC Electrical Distribution System - Single Line Diagram

9 AUXILIARY SYSTEMS

9.1 Fuel Storage and Handling

Fuel loading for the MNRC reactor core will consist of approximately 100 fuel elements, 5 control rods, 1 transient rod, and graphite elements. Fuel elements can be stored in the reactor tank and/or storage pits in the reactor room floor to facilitate burnup management or, when spent, until the time they are shipped to a reprocessing or storage facility.

Five in-tank aluminum fuel storage racks (Figure 9.1), with a combined capacity to accommodate 100 fuel elements are provided. The in-tank fuel storage racks are located at the outer edge of the reactor tank. Each rack has two levels with storage space to accommodate 20 fuel elements. The fuel elements are loaded into the in-tank fuel storage racks from above. Each storage hole has adequate clearance for inserting or withdrawing a fuel element without interference. The weight of the fuel elements is supported by the lower plates of the racks.

Control of spacing within a fuel storage rack is not actually required to limit the effective neutron multiplication factor of the array (k_{eff}). On the basis of the fact that each storage rack is limited to 20 elements, criticality is not possible, even if loaded with fresh fuel elements containing the maximum amount of uranium (i.e., all 30/20). Because calculations and experiments have shown that approximately 60 fresh elements in optimum geometry would be required to go critical, the 20 element storage racks have a large margin of criticality safety. The storage racks are designed to withstand a Uniform Building Code (UBC) Zone 3 earthquake with importance factor 1.5, when fully loaded.

The spent fuel storage pits at the MNRC facility are designed to withstand earthquake stresses up to and including those specified by the seismic criteria of UBC Zone 3 with an importance factor of 1.5. The design characteristics of the MNRC fuel storage system ensure that spent fuel is stored safely and that physical security is maintained. Five storage pits, with a combined capacity to accommodate 190 irradiated fuel elements, 38 per pit, are located in the floor of the reactor room. Each pit has a liner and a lead-filled shield plug that will be locked in place when fuel is not being moved into or out of the pits. The pits have racks with holes for holding fuel elements. Each hole in the rack can accommodate only one fuel element (Figure 9.2). All storage pit material (e.g., liners, racks, plug casing, and pipes) that may contact either the fuel

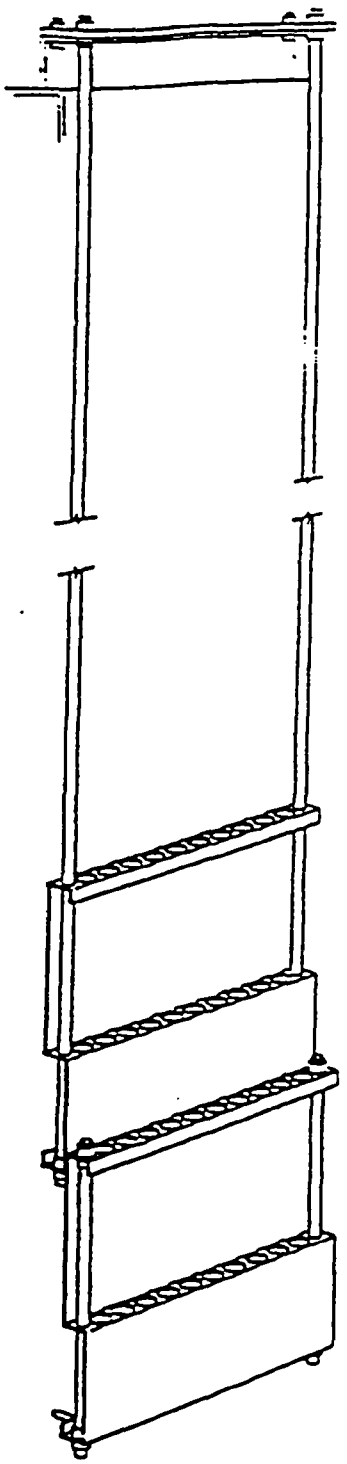

Figure 9.1
Typical In-Tank Fuel Storage Rack

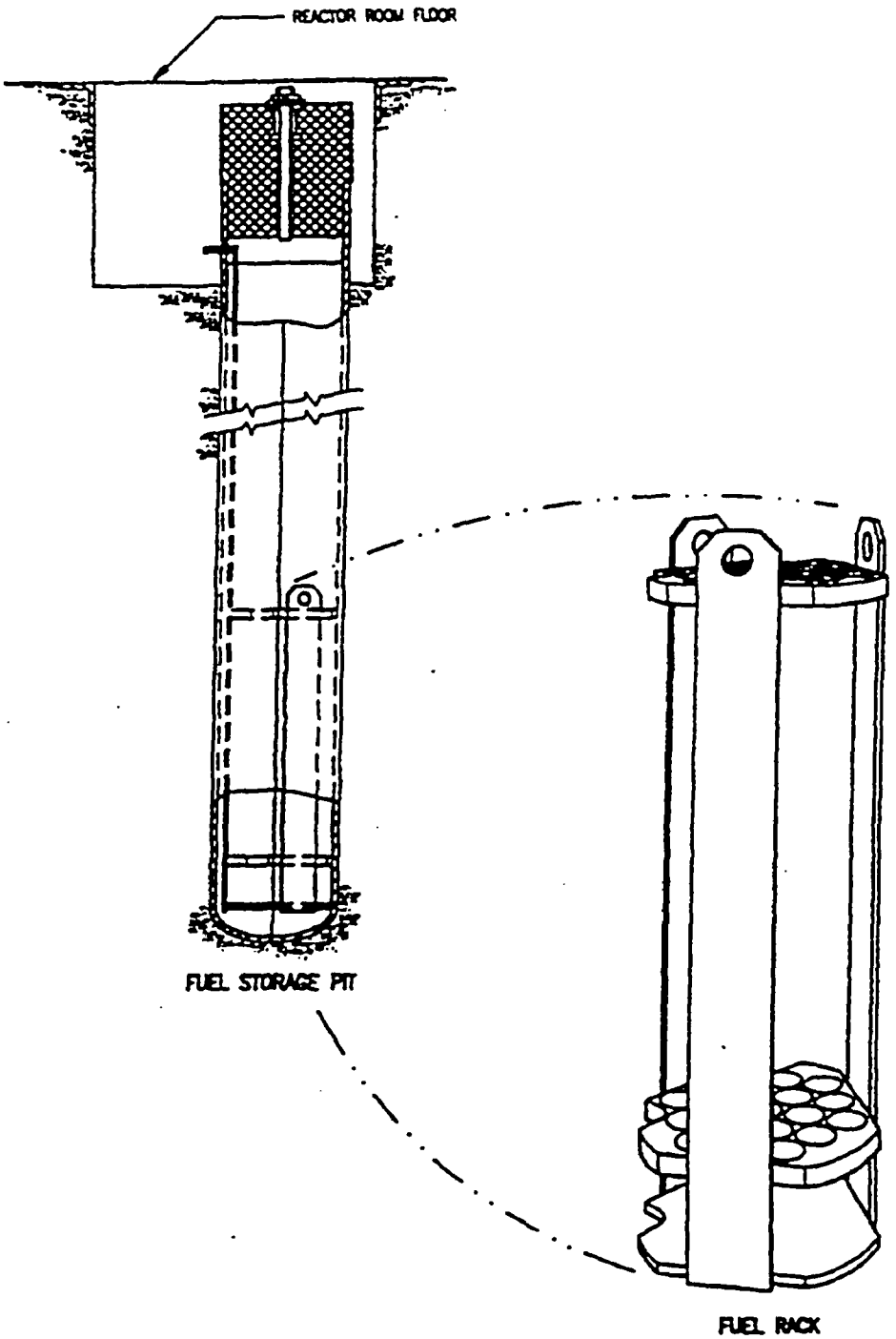

Figure 9.2
Fuel Storage Pit/Rack

elements or the pit water are fabricated from aluminum or Type 304 stainless steel. This is the same type of material as used for the fuel element cladding and end fittings and for the core components. The storage pits are equipped with a cooling water system that will be used, if required, to store fuel elements.

Space controls are not required to limit the K_{eff} within a fuel storage pit filled with water. An analysis shows the largest K_{eff} for a pit is approximately 0.93 when all five pits are loaded to capacity with [redacted] fuel elements [redacted] each) and are full of water (K_{eff} is approximately 0.45 when dry) (Ref. 1). Since [redacted] and [redacted] fuel both contain erbium, fresh [redacted] and [redacted] elements are similar in reactivity to [redacted], therefore, there should be no significant changes to the criticality of the storage pits. Because [redacted] elements are only approximately two-thirds the number required for criticality, criticality safety is assured under any fuel storage condition. The radiation level in the reactor room with either water in the storage pits or the lead plug in place is below 2 mrem/hr.

9.2 Auxiliary Makeup Water System

The AMUWS can supply water to the reactor core from a source external to the domestic water supply (Figure 9.3). Water is supplied from two storage tanks located below the secondary cooling tower. Each tank contains approximately 8705.5 L (2300 gal) of deionized water. The storage tanks have enough capacity to supply water to the reactor core area for approximately 4 hours at 1.26 L/s (20 gpm) if a backup supply to the ECCS is needed. Water purity is maintained by a set of resin columns located next to the storage tanks.

A control switch, located on the TCP, enables the reactor operator to start a 2238-W (3-horsepower) pump from the reactor control room. The pump can supply water to the reactor tank at a flow rate of 1.26 L/s (20 gpm). A light illuminates on the TCP when flow has been initiated through the AMUWS. The AMUWS contains pressure and flow gauges to verify that sufficient water flow is maintained for the duration of its use. Normally, the AMUWS piping is dry and will only be filled with water when the pump is started by the reactor operator from the control room. Check valves located in the reactor room prevent water from siphoning from the reactor tank back into the storage tanks when the system is operating in standby mode.

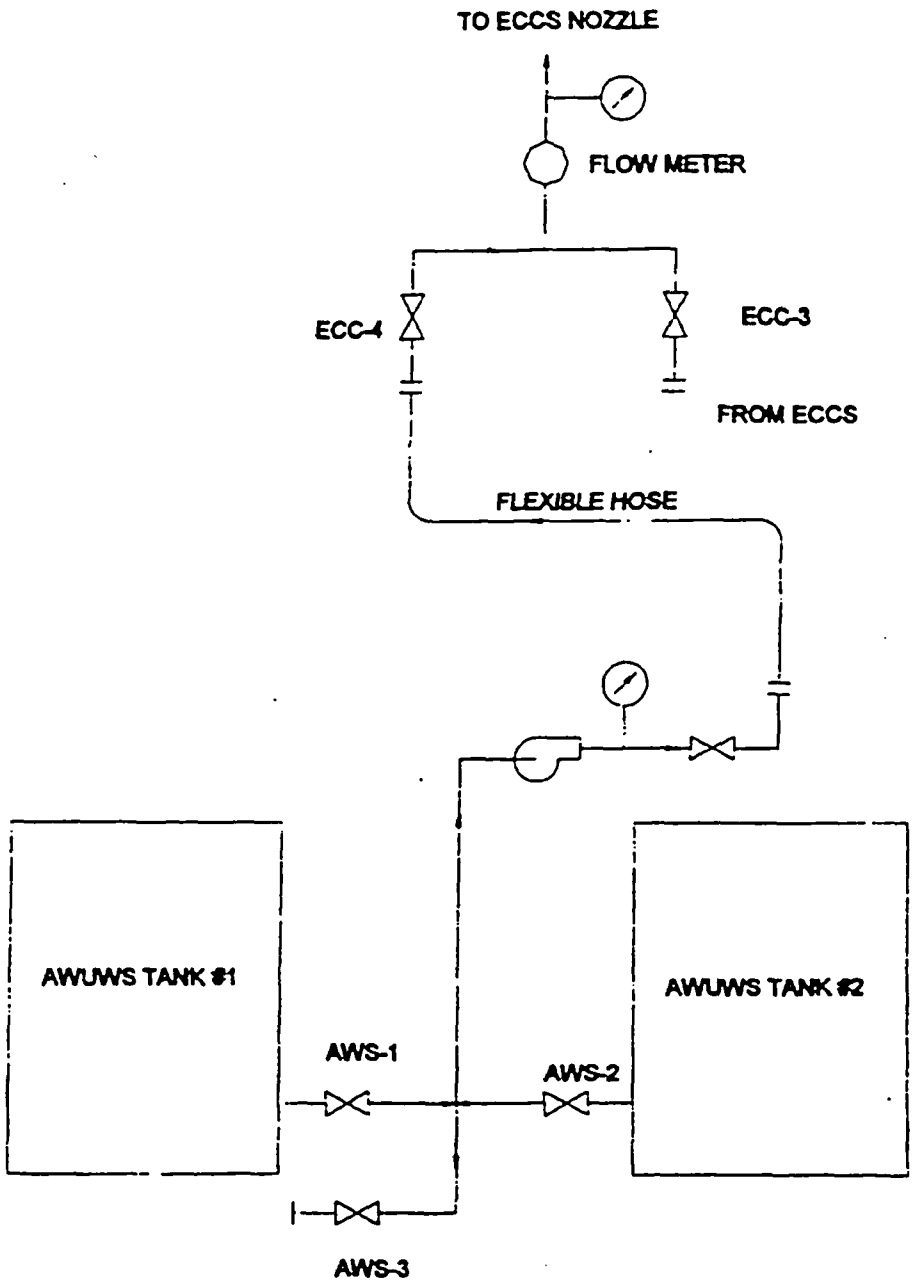

Figure 9.3

Auxiliary Makeup Water System

9.3 Fire Protection

A dry-pipe, pre-action fire sprinkler system provides fire suppression for the MNRC. This system receives its water supply from the existing onsite 30.48-cm (12-in) combination fire and domestic water main. Also, a fire hydrant is located near the northwest corner of the Non-Destructive Inspection Building, approximately 45.6 m (150 ft) from the MNRC. In addition to the dry-pipe system, the Data Acquisition Computer in the reactor room and the instrument cabinets and control consoles in the reactor and radiography control rooms contain fire detection and halon suppression systems (i.e., units located within the enclosures). The entire MNRC has either thermal or ionization-type fire detection devices, as well as manual pull boxes. Thermal detectors located in selected ducts of the air-handling system are designed to shut down the system when activated.

The MNRC fire detection and suppression system is automated, zoned, and supervised with hard-wired signal connections (Figures 9.4 and 9.5). The system has a self-contained 24-hour battery backup. There are two master panels. One is positioned near the main entrance to the reactor control room, and the other is located outside near the vehicle gate. The master panel provides local alarm information and transmits signals to the McClellan AFB fire station. Whenever a fire detection device activates, visual and audible warning devices alarm throughout the facility.

Since the MNRC reactor is government property, the McClellan Fire Department is the primary fire fighting authority. The McClellan Fire Department is trained in emergency procedures and provides emergency fire fighting and rescue as appropriate.

9.4 Air-Handling System

The MNRC air-handling system (Figure 9.6) provides heating and cooling for personnel comfort and serves several important roles for radiological control, as follows (ESF functions of the system are discussed in Chapter 6):

- Necessary air changes are provided to maintain Ar-41 and N-16 concentrations in the reactor room and radiography bays within the guidelines of 10 CFR Part 20, and pressure differentials are maintained throughout the facility to prevent spread of radioactive contamination.

Figure 9.4

MNRC Fire Suppression System, Main Floor

Figure 9.5

MNRC Fire Suppression System, Second Floor

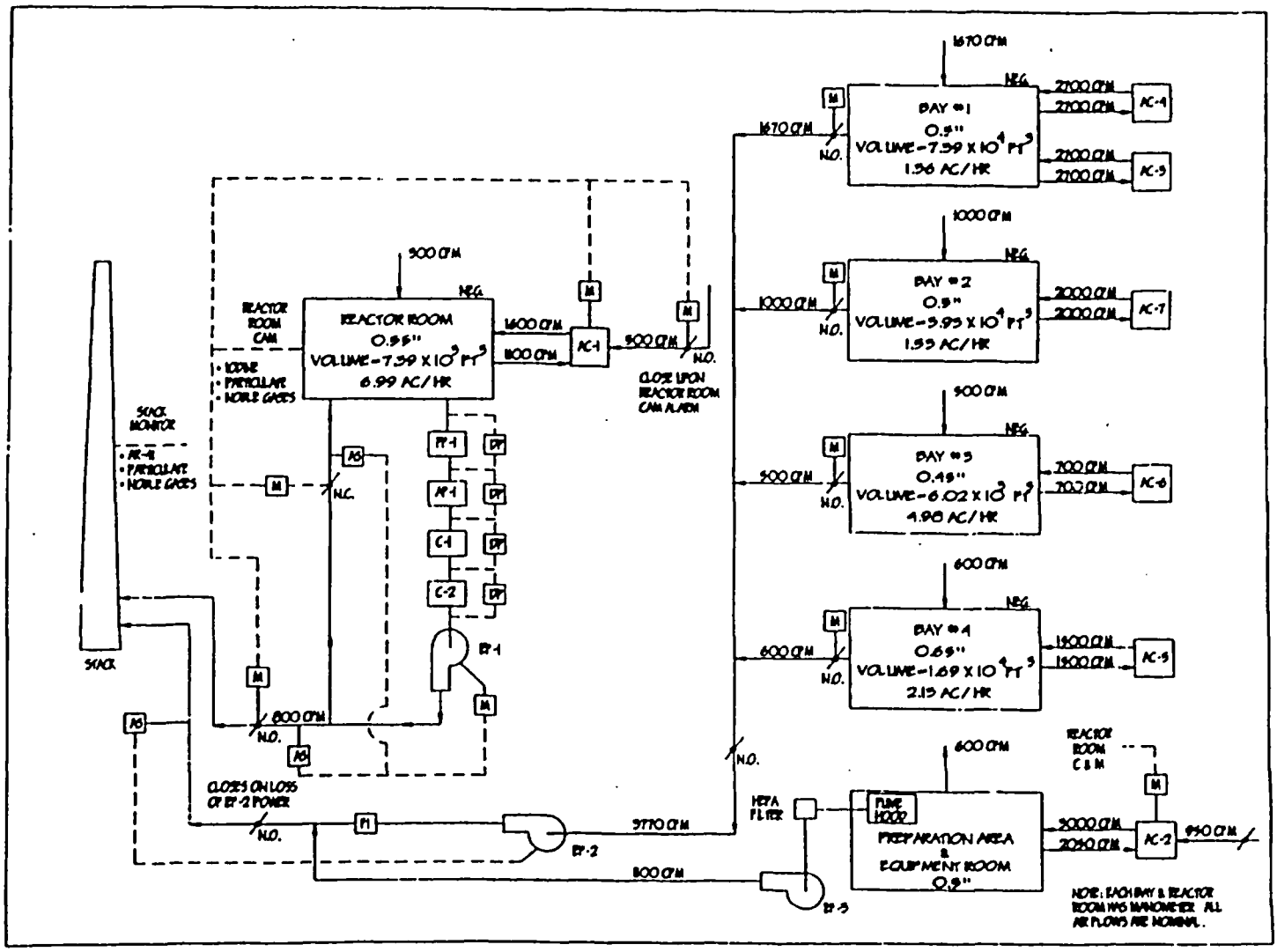

Figure 9.6

MNRC Air Handling System

The air-handling system is served by 14 different heating and air-conditioning systems and two exhaust systems. These systems all provide normal heating, cooling, and ventilation functions for personnel comfort and equipment cooling. In addition, many of these systems serve important roles in controlling Ar-41 and N-16 concentration levels from normal operation, as well as contamination control. These functionally similar systems recirculate and condition a significant portion of the air from the areas they serve and receive makeup air from outside the facility. Except in the staging areas, all are refrigeration systems. Units for the staging areas are equipped with evaporator-type coolers.

Air flows throughout the MNRC were designed and balanced so that pressures in the reactor room and radiography bays are slightly negative with respect to their surrounding areas. The reactor room air passes through a pre-filter and a HEPA filter before being discharged through the 18.24-m (60-ft) high exhaust stack. Air from the radiography bays passes through a standard filter before being discharged through the stack. The exhaust from the fume hood located in the preparation area passes through a HEPA filter before being discharged into the bay exhaust system. Each radiography bay exhaust duct contains a damper that can be closed for isolation.

9.5 Communications and Closed-Circuit Television Systems

The MNRC contains telephone, intercom, and closed-circuit television (CCTV) systems. The McClellan AFB telephone system was extended from near the existing Non-Destructive Inspection Building facility to a terminal board inside the MNRC. Distribution within the MNRC is controlled from this terminal board. An intercom system was provided between the reactor room, reactor control room, radiography control rooms, radiography bays, and equipment room. The master intercom stations are located in the reactor, radiography control rooms, and facility director's annex. CCTV cameras are also located in the MNRC facility. [redacted] Finally, an emergency evacuation system has been installed in the MNRC. This system can be manually activated from the reactor control room and the reactor room. When activated, a number of evacuation horns are sounded inside the facility.

9.6 Conclusions

On the basis of an evaluation of the information presented in the applicant's SAR, the staff concludes as follows:

- The design of the fuel storage systems insures that the stored fuel is maintained in a safe configuration and can be adequately cooled.

- The AMUWS is capable of supplying water to the reactor core and can provide a backup to the ECCS.

- The fire protection systems and the McClellan AFB fire department are capable of preventing fires, detecting, controlling and extinguishing fires, and protecting reactor systems.

- As discussed in Chapter 11, the air handling system is designed so that the release of airborne radioactive effluent during the full range of reactor operations is in compliance with the regulations.

- Communications and CCTV systems ensure that personnel in the reactor room, experimental areas, equipment room and other areas are aware of facility conditions.

- Functions and potential malfunctions that could affect reactor operations were considered in the design of the auxiliary systems (SAR Chapter 3.1, "Conformance with NRC Design Criteria"). No analyzed functions or malfunctions could initiate a reactor accident, prevent safe reactor shutdown, or initiate uncontrolled release of radioactive material.

- The TS and their bases proposed in the SAR give reasonable assurance that the auxiliary systems will operate as required.

10 EXPERIMENTAL FACILITIES

10.1 Introduction

As with other open-top tank or pool reactors, the MNRC reactor provides a range of radiographic and irradiation services to clients in both the military and civilian sectors. The facility currently provides four radiography bays and consequently four beams of neutrons for radiography. In addition to the radiography bays, the MNRC reactor core and associated experiment facilities are completely accessible for the irradiation of material. These irradiation services include silicon doping, isotope production (both medical and industrial), and neutron activation analysis (e.g., geological samples). All radiography bays contain the equipment required to position parts for inspection as well as the radiography equipment. A fifth beam is being designed for BNCT applications.

10.2 Experimental Facilities

The MNRC provides various facilities for the irradiation of materials which are either in the reactor core or external to the core.

10.2.1 Beam Tubes

Four beam tubes spaced at 90° intervals around the base of the reactor tank penetrate the reactor graphite reflector and provide a direct path for neutrons to each of the radiography bays (Figure 10.1). The beam tubes are positioned tangentially with respect to the reactor core and are inclined (20° and 30°) with respect to the horizontal plane. Beam tube supports and positioners are attached to the inside and outside of the tank without penetrations through the intact tank wall.

10.2.2 In-Core Facilities

The MNRC was designed with multiple in-core irradiation facilities to handle a broad range of potential experimental activities (Figure 10.2). These facilities consist of a central cavity, four experimental tube locations, a pneumatic transfer tube, and individual fuel element locations.

10.2.3 Pneumatic (Rabbit) Systems

The MNRC Pneumatic Transfer System was designed to accommodate the transfer of individual small specimens into and out of the reactor core (Figure 10.3). Specimens are

placed in a small polyethylene holder or "rabbit," which in turn is placed into the receiver. The rabbit travels through aluminum tubing to the terminus at the reactor core centerline. After the irradiation is completed, it returns along the same path to the receiver. Directional air flow moves the rabbit between the receiver and terminus. A blower assembly provides air flow in the system, and a solenoid valve directs air flow. Controls to operate the blower and solenoid valve are mounted to the wall adjacent to a fume hood that contains the receiver. The air flow design uses a blower to evacuate air, allowing atmospheric air pressure to push the rabbit into position, either at the irradiation terminus or at the receiver. This approach tends to decrease the likelihood of fragments from a shattered rabbit becoming trapped in the terminus.

10.2.4 BNCT Facility

The MNRC is in the process of designing a BNCT facility that would be capable of treating tumor patients. Use of this facility will be reviewed as a part of a separate licensing action.

10.3 Experimental Review

The MNRC experiment review is currently being conducted according to established procedures (MNRC-0027-DOC and MMRG-0033-DOC). This process requires that any individual wishing to utilize the MNRC reactor experimental facilities submit an Experimenter Approval Request Form to the office of Nuclear Licensing and Operations. Once submitted, the request is coordinated through the MNRC Experiment Review and Approval process as depicted in Figure 10.4. Any experiment outside of the TSs requires that a TS change be initiated and approved by the NRC.

The MNRC TSs include sections that control experiments and the use of experimental facilities. These TSs place limits on the reactivity of single moveable and secured experiments and the absolute worth of all in-tank experiments such that failure of all experiments in the reactor will not exceed the maximum reactivity insertion limit. The TSs require that the worth of any in-tank experiment be estimated or measured before the reactor is operated with the experiment. The applicant also placed strict TS controls on experiments that contain corrosive, highly reactive, explosive, or fissionable or fuel materials (TS 3.8.2). These limits will help ensure that experiment failure will not damage the reactor or result in unacceptable doses to the reactor staff or members of the public. TSs have been proposed by the applicant to control releases of

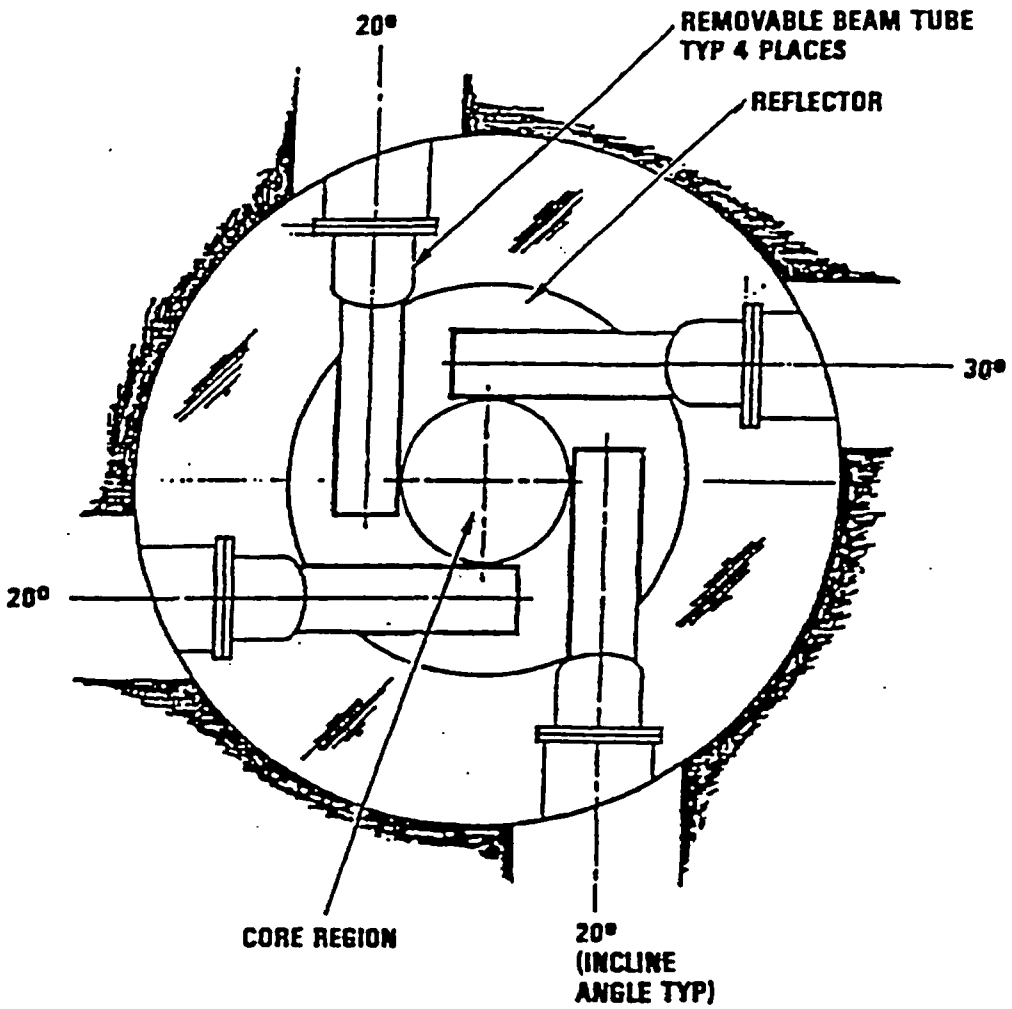

Figure 10.1

Beam Tube Locations

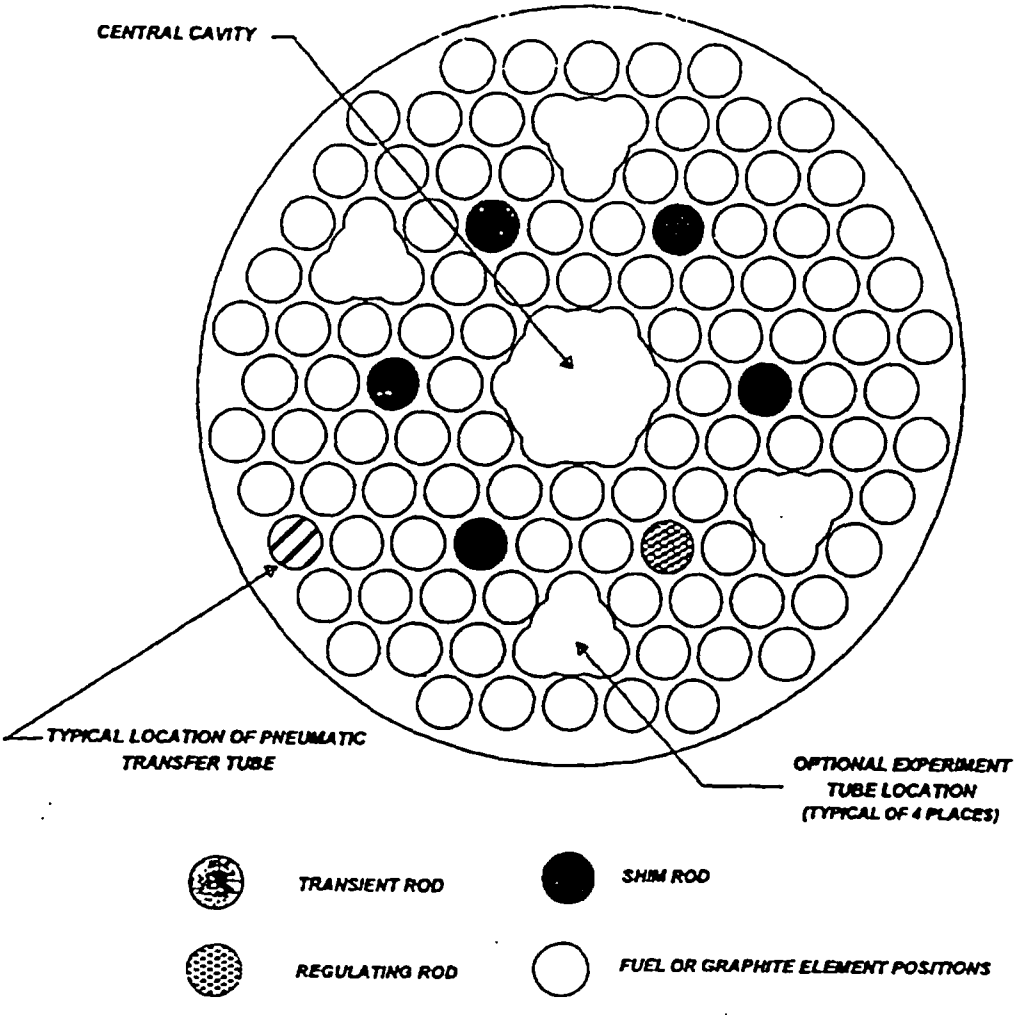

Figure 10.2

In-Core Facilities

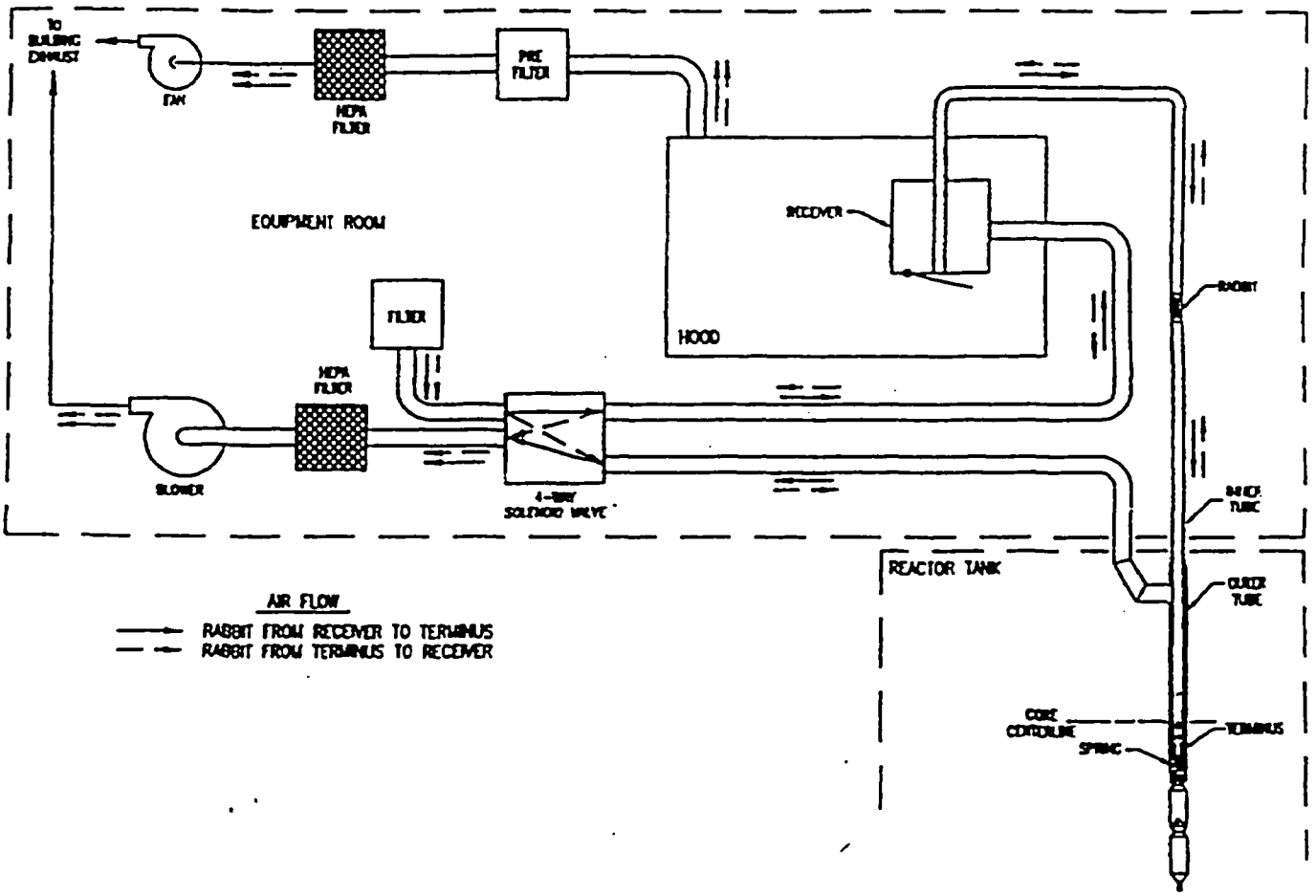

Figure 10.3

Pneumatic Transfer System

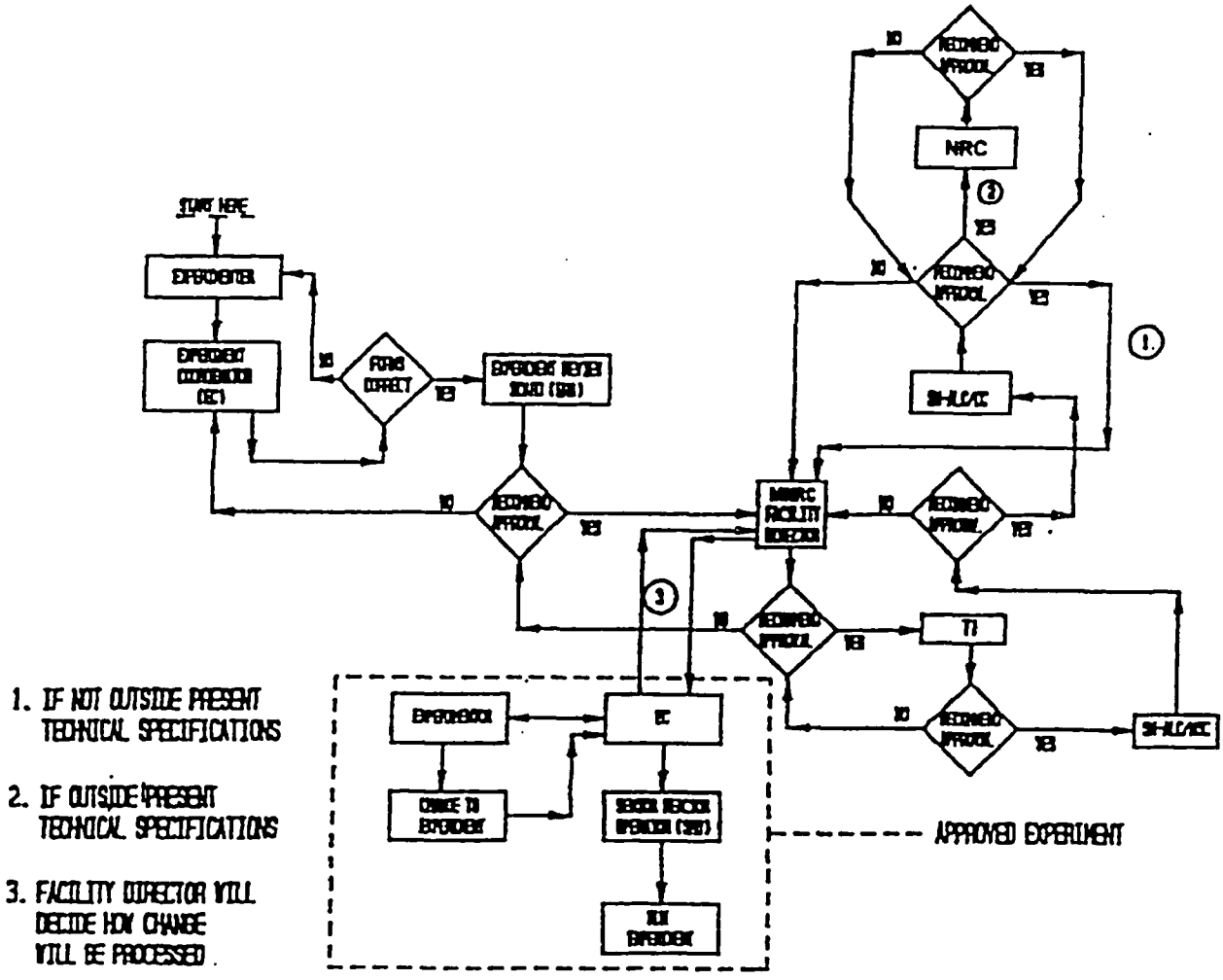

Figure 10.4

Experiment Review and Approval Process

radioactive materials from experiments during normal and accident conditions such that regulatory limits are not exceeded at the operations boundary.

10.4 Conclusions

On the basis of an evaluation of the information presented in the applicant's SAR, the staff concludes as follows:

- The applicant has demonstrated its reliance on an independent safety committee to conduct reviews of all experiments. The diversity and expertise of the committee's membership are appropriate to its function.

- The procedures and methods used at the MNRC ensure a detailed review of all potential safety and radiological risks that may be posed by an experiment to the facility or the public.

- Administrative controls for the MNRC are sufficient to protect operations personnel, experimenters, and the general public from radiation and other potential hazards caused by experiments. Expected radiation doses do not exceed the limits cited in 10 CFR Part 20 and are consistent with the MNRC ALARA program.

- The design and planned operation and utilization of experimental facilities will not result in operation of the reactor outside TS limits. Reactivity changes resulting from experimental facility malfunction are within acceptable limits and will not result in unacceptable reactor behavior. The design of experimental facilities ensures that facility staff and public radiation doses are within the limits of the regulations and the facility ALARA program.

- The TSs place acceptable limits on the use of experimental facilities and the conduct of experiments.

11 RADIATION PROTECTION AND WASTE MANAGEMENT

11.1 Introduction

The MNRC has a structured radiation protection program and a health physics staff that is provided with radiation detection equipment to determine, control, and document occupational radiation exposures throughout the facilities. The MNRC monitors both liquid and airborne effluents at the points of release to comply with applicable regulations. The MNRC also has an environmental monitoring procedure to verify that potential radiation exposures in unrestricted areas surrounding the reactor are well within established regulations and guidelines. Specifically, the applicant has identified and committed to the requirements of 10 CFR Part 20.1101, "Radiation Protection Programs," by stating that the program will meet the following fundamental principles of radiation protection.

"The purpose of the MNRC radiation protection program is to allow the maximum beneficial use of radiation sources with minimum radiation exposure to personnel. Requirements and procedures set forth in this program are designed to meet the following fundamental principles of radiation protection:

- Justification – No practice shall be adopted unless its introduction produces a net positive benefit.

- Optimization – All exposures shall be kept as low as reasonably achievable, economic, and social factors being taken into account.

- Limitation – The dose equivalent to individuals shall not exceed limits established by appropriate state and federal agencies. These limits shall include, but not be limited to, those set forth in the *Code of Federal Regulations* (CFR)."

11.2 ALARA Commitment

McClellan AFB management has established and implemented a policy requiring that all facility operations be planned and conducted in a manner that limits radiation exposures to ALARA levels. Guidelines and procedures were developed to ensure uniform application of this policy. The applicant has committed to review all proposed experiments and procedures at the reactor

for ways to limit potential exposures. All unanticipated or unusual reactor-related exposures are investigated by both the health physics and reactor operations staffs to ascertain the cause and to develop methods for preventing recurrences.

11.3 Health Physics Staff

The health physics staff consists of a health physics supervisor and other personnel as needed. The reactor health physics supervisor reports to the MNRC Director and has primary responsibility for health physics at the facility. The onsite staff has sufficient training and experience to direct the radiation protection program for a research reactor. In addition, the health physics staff has the responsibility, the authority, and adequate lines of communication to implement and conduct an effective radiation protection program (Figure 11.1).

11.3.1 Health Physics Procedures

The applicant has prepared formal procedures addressing health physics activities required to support the routine operation of the TRIGA reactor. These procedures identify interactions between the health physics and operations staffs, as well as with personnel conducting approved experiments. They also specify administrative exposure limits and action points, as well as appropriate responses and corrective actions for use when these limits or action points are reached or exceeded.

11.3.2 Health Physics Training

Health Physics training is structured at different levels to meet the needs of different categories of facility staff and researchers. All personnel and visitors entering the MNRC facility receive training in radiation protection sufficient for the work/visit, or are escorted by an individual who has received such training. There are three levels of training, (1) initial training, (2) specialized training, and (3) annual refresher training. Each level satisfies the particular needs of the facility staff.

11.4 Radiation Sources

Major radiation sources that the radiation protection program was established to guard against are described in the following sections.

11.4.1 Reactor

Sources of radiation directly related to reactor operations include radiation from the reactor core and ion exchange equipment, as well as radiation from the primary coolant and N-16 and Ar-41 released from the reactor pool water. The reactor fuel and all fission products are normally completely contained in the fuel cladding. Radiation exposure from the reactor core is reduced to acceptable levels by water and concrete shielding.

The reactor tank is surrounded by a monolithic structure that provides a reinforced standard concrete bulk shield. Below ground level, the concrete is about 3.344 m (11 ft) thick. Above ground level, the concrete varies in thickness from about 3.04 m (10 ft) to 0.988 m (3.25 ft), with the smaller dimension at the top of the tank. The entire structure is supported by a concrete pad about 2.888 m (9.5 ft) thick (Figure 11.2). The massive concrete structure provides radiation shielding for personnel working in and around the MNRC, as well as excellent protection against external phenomena that could damage the reactor core. Spent fuel handling is done utilizing a special fuel transfer cask to ensure that exposures be kept as low as possible. Specific fuel transfer procedures are in place.

11.4.2 Radiation Sources

Sources of radiation that may be considered incidental to normal reactor operation but are nonetheless associated with reactor use include radioactive isotopes produced for research, activated components of experiments, and activated samples or specimens. Personnel exposure to radiation from intentionally produced radioactive material, as well as from the required manipulation of activated experimental components, is controlled using rigidly developed and reviewed operating procedures that employ the standard protective measures of time, distance, and shielding.

The radiation protection measures used at the MNRC are patterned after other TRIGA reactor facilities where the radiation sources are similar. However, unlike many TRIGA reactors, the reactor room is normally unoccupied during reactor operation. Access is controlled by key card entry and personnel exposures are minimized. Facility organization charts, actual radiation measurements and operating data from around the MNRC, and a description of radiation protection program components will be used to characterize the features

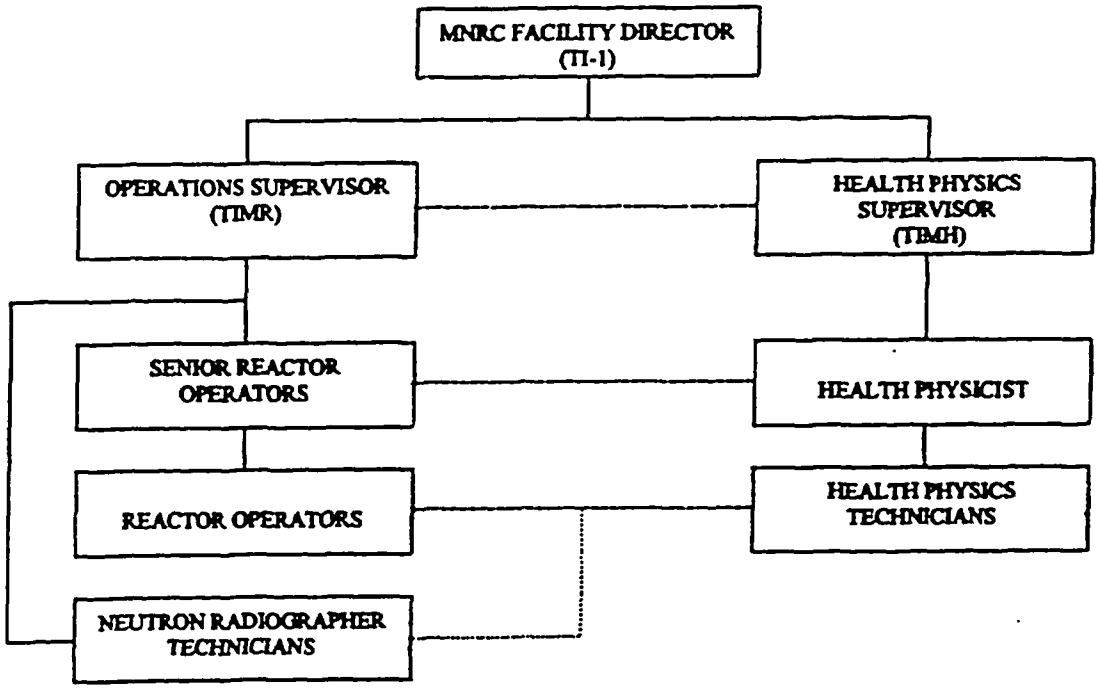

WORKING INTERFACE

TI-1 - OFFICE OF NUCLEAR LICENSING AND OPERATIONS

TIMH - HEALTH PHYSICS BRANCH

TIMR - NUCLEAR OPERATIONS BRANCH

——/—— WORKING INTERFACE

Figure 11.1

Organizational Structure of the Radiation Protection Program Within MNRC

of the different programs used to maintain occupational doses and releases of radioactivity to the unrestricted environment at ALARA levels.

11.4.2.1 Specific Radiation Sources

The radiation sources present at the MNRC can be categorized as airborne, liquid, or solid. While each of these categories will be discussed individually, the major contributors to each category can be summarized as follows. Airborne sources consist mainly of Ar-41, largely because of neutron activation of air in the radiography bays and air dissolved in the reactor's primary coolant, and N-16, because of neutron interactions with oxygen in the primary coolant. Liquid sources are limited at the MNRC and include mainly the reactor primary coolant. No routine liquid effluent or liquid waste is anticipated. Solid sources for the most part are very typical of all TRIGA reactor facilities. Such sources include the fuel in use in the 2 MW core, used irradiated fuel, and fresh unirradiated fuel. In addition, other solid sources are present such as the neutron startup source, small fission chambers for use with nuclear instrumentation, irradiated silicon ingots, irradiated aircraft components subjected to neutron radiography, other items irradiated as part of normal reactor use, and small instrument check and calibration sources. Solid waste is another solid source, but has been limited in volume and curie content.

11.4.2.2 Airborne Radiation Sources

During normal operation of the MNRC reactor, there are two sources of airborne radioactivity (Ar-41 and N-16). The assumptions and calculations used to assess the production and radiological impact of these airborne sources during normal operations are given in Appendix A of the SAR (Ref.1).

Fuel element failure, although not expected, could occur while the reactor is operating normally. Such a failure would usually occur as a result of a manufacturing defect or corrosion of the cladding and would result in a small penetration of the cladding through which fission products would be slowly released into the primary coolant. Some of these fission products, primarily the noble gases, would migrate from the cooling water into the air of the reactor room. Although this type of failure could occur during normal operation, its occurrence is <u>not</u> normal and no normal operation would take place after such an event until the failed element is located and

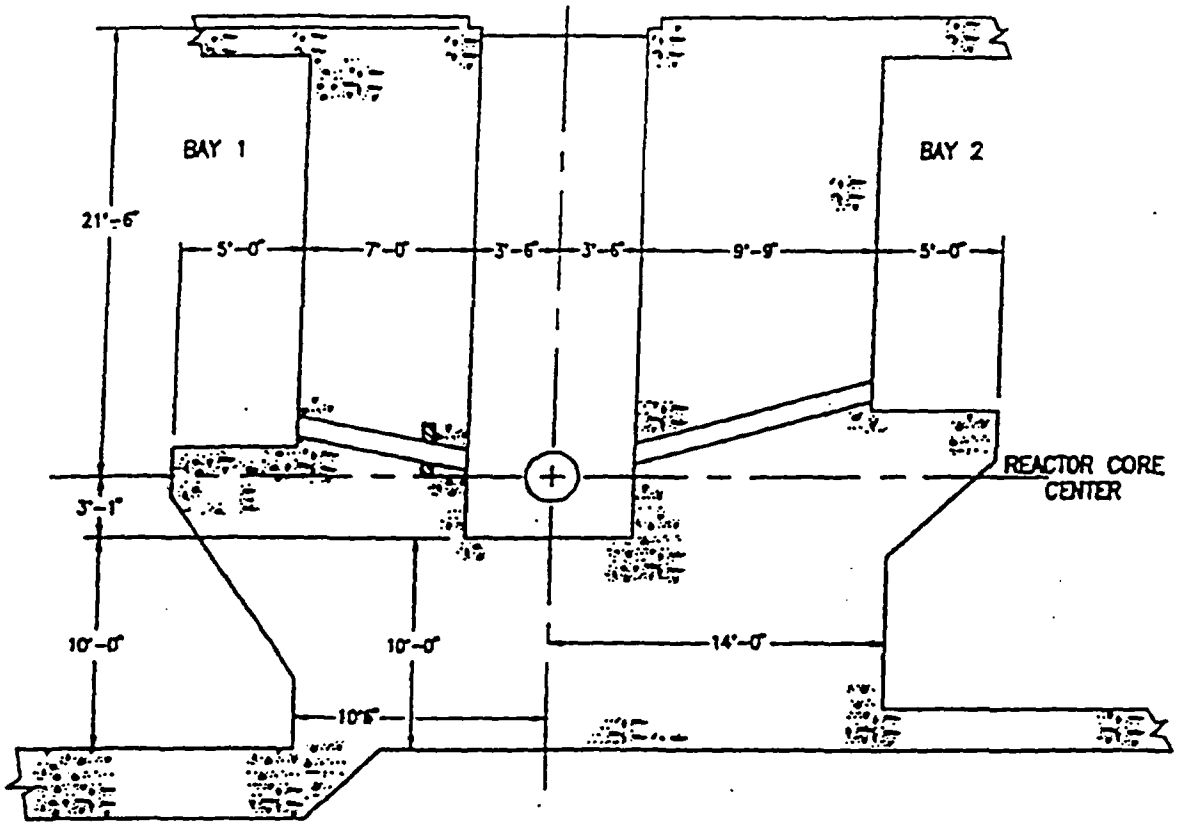

Figure 11.2

Concrete Biological Shield

removed from the core. The reactor may need to be operated for short periods of time to assist in locating a failed fuel element. The calculation of the equilibrium concentration of Ar-41 in an enclosure is described in Appendix A of the SAR. The calculation considers the balance between the production rate (neutron activation in air) and the removal rate (radioactive decay and room exhaust rate).

11.4.2.3 Ar-41 in the Radiography Bays

Occupational exposure to Ar-41 during normal operation of the MNRC reactor can occur in the radiography bays and in the reactor room. Ar-41 concentrations in the radiography bays were stated in the SAR (Tables 11.1 and 11.2). These values are low compared to 10 CFR Part 20 limits even when film radiography is being conducted in all bays. Furthermore, Ar-41 production from the radiography bays is insignificant when considering the release of this radionuclide from the facility to the unrestricted areas.

11.4.2.4 Ar-41 in the Reactor Room

Assuming complete mixing of the Ar-41 with reactor room air, the equilibrium Ar-41 concentration in the reactor room with the room exhaust system on will be approximately 5.22×10^{-6} μCi/ml. Should the reactor be operated without the room's exhaust system in operation, the equilibrium concentration would increase to 9.43×10^{-5} μCi/ml; however, this is not a permissible mode of normal operation and therefore will not occur for a sufficient period of time to allow this concentration to develop in the room.

The 10 CFR Part 20 DAC for Ar-41 is 3.0×10^{-6} μCi/ml. Therefore, the 5.22×10^{-6} μCi/ml calculated Ar-41 concentration for the reactor room under normal operating conditions (i.e., 2 MW steady state with the reactor room exhaust system operating) is about 1.74 times the NRC occupational concentration limit. However, because of the small size of the reactor room, even 2000 hours of annual occupancy at this concentration will still result in a total effective dose equivalent (TEDE) which is well below the 10 CFR Part 20 limits.

Actual measurements of Ar-41 in the reactor room after the reactor had operated for about 9.0 hours at 1 MW (reactor room exhaust system on) showed Ar-41 concentrations averaging about 1.5×10^{-6} μCi/ml for areas which are occupied during normal work in the room. This would then correlate to about 3.0×10^{-6} μCi/ml at 2 MW.

Using the same calculational method employed for estimating the Ar-41 dose to personnel in the radiography bays, and recognizing that the dimensions of the reactor room do not provide a cloud volume large enough to create a semi-infinite cloud for Ar-41, the total effective dose equivalent (TEDE) after 2000 hours of immersion in an Ar-41 concentration of 5.22×10^{-6} μCi/ml is about 220 mrem, and for 2000 hours in a concentration of 3.0×10^{-6} μCi/ml the TEDE is about 126 mrem. Both of these doses are well within the NRC occupational dose limits.

11.4.2.5 Ar-41 from the Pneumatic Transfer System

Ar-41 will also be produced in the section of the pneumatic transfer system that is located in the reactor core. During operation of the transfer system, air containing very small amounts of Ar-41 is exhausted from the system through a HEPA filter to the facility stack. There has not been a significant increase in Ar-41 releases, as measured by the stack monitor, from numerous operations of this system. Therefore, the Ar-41 from the pneumatic transfer system is not considered to be a measurable contributor to the Ar-41 doses associated with MNRC operations.

11.4.2.6 Ar-41 Release to the Unrestricted Area

The Ar-41 from the reactor room and the radiography bays will be discharged from the MNRC through the facility's exhaust stack, which is 60 ft above ground level. Dilution with other building ventilation air and atmospheric dilution will reduce the Ar-41 concentration considerably before the exhaust plume returns to ground level locations which could be occupied by personnel. The detailed calculations relating to the dispersion of Ar-41 released from the stack are contained in Appendix A of the SAR (Ref. 1.) The results of the plume dispersion calculations by the applicant, and confirmed by the staff, for the discharge of Ar-41 out of the facility stack are shown for various atmospheric conditions in Table 11.1.

Table 11.1
Concentrations of Ar-41 Released from the MNRC Stack under Different Atmospheric Conditions

Atmospheric Stability Classification	Ar-41 Concentration (μCi/ml)	Distance From Stack (meters)
Extremely Unstable (A)	1.3×10^{-10}	92
Slightly Unstable (C)	1.96×10^{-10}	240
Slightly Stable (E)	8.0×10^{-11}	720
Extremely Stable (G)	5.9×10^{-11}	4200

Using Ar-41 concentrations from the table and Ar-41 dose conversion factors for immersion in a semi-infinite cloud, calculations show that a person immersed for a full year in a semi-infinite cloud of Ar-41 at the maximum projected concentration in the unrestricted area (1.96×10^{-10} μCi/ml) would receive a total effective dose equivalent of approximately 1.2 mrem. This value is within the NRC's 10 CFR Part 20 dose limit of 100 mrem per year for members of the general public in the unrestricted area.

11.4.2.7 N-16 in the Reactor Room

In addition to Ar-41, the other source of airborne radioactivity during normal operation of the MNRC reactor is N-16. It is generated by the reaction of fast neutrons with oxygen in water passing through the core. The oxygen present in air, either in a beam path or entrained in the water near the reactor core, is insignificant compared to the oxygen in the water molecule in the liquid state. Production of N-16 resulting from neutron interactions with the oxygen in air and air entrained in the cooling water can be neglected.

After N-16 is produced in the core region, it rises to the tank surface and forms a disc source which creates a direct radiation field near the top of the tank. Some of the N-16 is subsequently released into the reactor room. Calculations for the production and mixing of N-16 in the primary coolant and for the evolution of N-16 from the reactor tank into the reactor room air are presented in Appendix A of the SAR (Ref. 1). Without exception, the calculated N-16 concentrations and dose rates are very conservative because they do not assume use of the conventional in-tank N-16 diffuser system, which is present in the MNRC primary water circulation system. Since this system is used during all normal operation of the reactor, and is designed to significantly delay the N-16 transit time to the upper regions of the tank when the system is operating, the 7.14 second N-16 half-life brings about considerable decay and a corresponding reduction in N-16 radiation levels at the tank surface and in the reactor room itself.

Estimates of N-16 dose rates are on the basis of extrapolations of actual dose rate measurements at about 1 ft and 3 ft over the MNRC reactor tank at 1 MW with the diffuser on. Using this approach, the predicted N-16 dose rate at 1 ft over the tank water surface at 2 MW will be about 60 mrem per hour and at 3 ft about 10 mrem per hour.

The escape of N-16 into the reactor room air will also deliver a radiation dose to workers in the room on the basis of the N-16 concentration, which will be influenced by dilution in room air, decay of this short-lived radionuclide, and room ventilation. By assuming that the diffuser is off, referring to the calculations in Appendix A and using the volume of the reactor room with its current 800 cubic feet per minute ventilation rate, a conservative N-16 concentration can be predicted to be 1.4×10^{-4} μCi/ml. As with Ar-41, the reactor room volume is not large enough to create a semi-infinite cloud geometry for N-16, and therefore the calculated dose rate from the preceding N-16 concentration, when it is distributed uniformly throughout the room, is about 7.7 mrem/hr near the center of the room. Because of its short half-life and the reactor room ventilation pattern, and the fact that the N-16 diffuser is assumed to be off, it is very unlikely that N-16 will ever reach a uniform concentration of 1.4×10^{-4} μCi/ml in the room. Therefore, the actual dose rate from N-16 in the reactor room is expected to be considerably lower than this worst-case estimate. Although some N-16 may be removed by the reactor room ventilation system, the N-16 contribution to dose rates in the unrestricted area is negligible because of its rapid decay.

11.4.2.8 Liquid Radioactive Sources

No liquid radioactive material is routinely produced by the normal operation of the MNRC except for miscellaneous neutron activation product impurities in the primary coolant, most of which is deposited in the mechanical filter and the demineralizer resins. Therefore, these materials are dealt with as solid waste. Non-routine liquid radioactive waste could result from decontamination or maintenance activities (i.e., filter or resin changes). The amount of this type of liquid waste is expected to remain small, especially on the basis of past experience. Because of this, the liquid will be processed to a solid waste form onsite and will be disposed of with other solid wastes.

11.4.2.9 Radioactivity in the Primary Coolant

As mentioned above, the only significant liquid radioactive source at the MNRC is the reactor primary coolant. Radioactivity in this liquid source occurs as a result of neutron activation of Ar-40 in entrained air (creating Ar-41); neutron interactions with oxygen in the water molecule (creating N-16); and neutron interactions with tank and structural components with subsequent transfer of the radioactivity into the primary coolant. Radionuclides such as manganese-56 and sodium-24 are common examples of waterborne radioactivity created in this manner. Tritium is also present in the primary coolant mainly as a fission product which escapes from TRIGA fuel through the stainless steel cladding. (Tritium's escape from TRIGA fuel elements is not because of cladding defects or failure, but is instead as a result of a normal migration of hydrogen through the stainless steel matrix. This is consistent with stainless steel-clad fuels at other TRIGA reactors.)

As noted, other sources of liquid radioactivity are not currently projected for the MNRC reactor system and no radioactive liquid effluents and no liquid wastes have been generated during operation under Air Force jurisdiction. It is anticipated that this situation will continue.

Radionuclides and their concentrations in the primary coolant vary depending on reactor power, reactor operating time and time since reactor shutdown, assuming other variables such as the effectiveness of the water purification system remain constant. To characterize the radioactivity expected to be present in the MNRC primary coolant at 2 MW, measured concentrations for the predominant radionuclides at 1 MW were adjusted to reflect estimated equilibrium concentrations at 2.0 MW. The applicant has shown these values in Table 11.2.

Table 11.2

Predominant Radionuclides and Their Projected Equilibrium Concentrations in the MNRC Reactor Primary Coolant at 2 MW

Radionuclide	Half Life	Projected Equilibrium Concentration at 2 MW (μCi/ml)
Aluminum-28	2.3 min	6.0×10^{-3}
Argon-41	1.8 hr	3.0×10^{-3}
Hydrogen-3	12 yr	1.0×10^{-3}
Magnesium-27	9.46 min	4.0×10^{-4}
Manganese-56	2.58 hr	4.7×10^{-4}
Nitrogen-16	7.14 sec	131*
Sodium-24	14.96 min	2.6×10^{-3}

(*calculated approximation on the basis of water leaving the core–not a uniform concentration)

As mentioned, it is MNRC policy not to release liquid radioactivity as an effluent or as liquid waste. Therefore, the primary coolant does not represent a source of exposure to the general public during normal operations. Furthermore, occupational exposure from liquid sources is also limited because there are few operations which require contact with the primary coolant. In cases where contact is a potential, such as in certain maintenance operations, the primary coolant would normally be allowed to decay for several days or more to significantly reduce radioactivity concentrations. Because of the short half-lives of most of the predominant radionuclides in the primary coolant, five radionuclides would be essentially gone after 48 hours and sodium-24 would be reduced by about a factor of 10. Experience at other TRIGA reactors indicates that Hydrogen-3 would not be a source of significant occupational dose.

11.4.2.10 Solid Radiation Sources

The solid radioactive sources at MNRC consist of the following:

- fuel elements
- control rods
- fission chambers
- startup source
- instrument calibration sources
- irradiated silicon and other items
- demineralizer resins
- mixed activation materials

Actual inventories continually change as part of normal operation; therefore, the applicant has given examples in their SAR (Ref. 1).

11.5 Routine Monitoring

Key aspects of the MNRC radiation protection program for routine monitoring of radiation are addressed in the following sections.

11.5.1 Health Physics Instrumentation

The MNRC facility has a variety of detection and measurement instruments available to monitor potentially hazardous radiation. Established instrument calibration procedures and techniques ensure that any credible type of radiation and any significant radiation intensities will be promptly detected and correctly measured.

11.5.2 Fixed-Position Monitors

The MNRC facility uses fixed-position radiation monitors in addition to portable monitors. Area radiation monitors are placed at strategic locations in the reactor building where radiation levels might be significant or where increases might indicate abnormal or hazardous conditions. The exhaust stack system measures both radioactive gases and particulates.

11.5.3 Monitoring for Radiation Levels and Contamination

The radiation monitoring program for the MNRC reactor is designed to ensure that all three categories of radiation sources (e.g., air, liquid and solid) are detected and assessed in a timely manner. To achieve this, the monitoring program is organized such that two major types of radiation surveys are carried out; namely, routine radiation level and contaminated level surveys of specific areas and activities within the facility, and special radiation surveys necessary to support non-routine facility operations.

The routine monitoring program is structured to make sure that adequate radiation measurements of both radiation fields and contamination are made on a regular basis. This program includes but is not limited to the following measurements:

(1) typical surveys for radiation fields

- (a) surveys whenever operations are performed that might significantly change radiation levels in occupied areas
- (b) daily surveys at temporary boundaries (e.g., rope barriers)
- (c) weekly surveys in accessible radiation areas and high radiation areas and in all other occupied areas of the MNRC facility
- (d) quarterly surveys outside of the MNRC facility
- (e) quarterly surveys in radioactive material storage areas
- (f) quarterly surveys on potentially contaminated ventilation ducting outside of the MNRC facility
- (g) surveys upon initial entry into a radiography bay after the shutter is closed or upon entry into the demineralizer cubicle

(h) surveys in surrounding areas where personnel could potentially be exposed when radioactive material is moved

(i) surveys when performing operations that could result in personnel being exposed to small intense beams of radiation (e.g., when transferring irradiated fuel, when removing shielding, or when opening shipping/storage containers)

(j) surveys of packages received from another organization

(k) surveys when irradiated parts or equipment are removed from a radiography bay, or from the reactor core, from a fuel storage pit, from the pneumatic transfer system terminal, or from the reactor room

(l) surveys as necessary to control personnel exposure. Such surveys may include the following

- Gamma surveys of potentially contaminated exhaust ventilation filters when work is performed on these filters
- Gamma and neutron surveys on loaded irradiated fuel containers
- Gamma and neutron surveys when handling an unshielded neutron source

(2) typical surveys for contamination

(a) surveys at the exits to the MNRC facility once per shift

(b) daily surveys in accessible contaminated areas and occupied areas surrounding contaminated areas

(c) weekly surveys in occupied non-contaminated areas of the MNRC

(d) quarterly surveys in areas outside of the MNRC facility, but within the facility fence

(e) quarterly surveys in radioactive material storage areas

(f) surveys as necessary to control the spread of contamination whenever operations are performed that are known to result in, or expected to result in, the spread of contamination

(g) surveys prior to removal of paint from areas where contaminated paint is possible

(h) surveys as part of the following operations

- decontamination of equipment
- removal of irradiated parts or equipment from a radiography bay, the reactor core, a fuel storage pit, the pneumatic transfer system terminal, the reactor room, or the MNRC facility
- inspection, maintenance, or repair of the primary cooling system
- initial opening of the secondary cooling system for inspection, maintenance, or repair
- when working in or entering areas where radioactive leaks or airborne radioactivity has occurred previously
- upon initial entry into potentially contaminated exhaust ventilation ducting
- prior to replacing filters or ducting in potentially contaminated exhaust ventilation systems

11.5.4 Radiation Monitoring Equipment

Radiation monitoring equipment used in the MNRC reactor program is summarized in Table 11.3. The locations of many of the pieces of equipment are shown in Figures 11.3 and 11.4. Because equipment is updated and replaced as technology and performance requires, the equipment in Table 11.3 should be considered representative rather than an exact listing.

Table 11.3
Radiation Monitoring and Related Equipment Used in the MNRC Radiation Protection Program

ITEM	LOCATION	FUNCTION
Continuous Air Monitors (3) ** Stack Effluent Monitor ** Reactor Room Air Radiography Bays Air	CAM Room CAM Room Sample Preparation Room	Measure radioactivity in stack effluent Measure reactor room airborne radioactivity Measure radiography bay airborne radioactivity (All Monitors Measure Gas & Particulate)
Radiation Area Monitors (6)	Staging Area No. 1 Staging Area No. 2 Staging Area No. 4 Equipment Room ** Demineralizer Area ** Reactor Room	Measure gamma radiation fields in occupied or accessible areas of the MNRC facility
Portable Ionization Chamber Survey Meters (3)	Staging Area No. 1 Staging Area No. 2 Sample Preparation Area	Measure beta/gamma radiation dose rates
Portable Neutron Survey Meters (2)	Staging Area No. 1 Sample Preparation Area	Measure neutron radiation dose rates
Portable MicroR Survey Meters (2)	Staging Area No. 1	Measure low level and environmental gamma radiation dose rates
Portable G-M Survey Meters (4)	Staging Area No. 1 Staging Area No. 4 Sample Preparation Area Health Physics Lab	Measure beta/gamma contamination levels
Portable Alpha Survey Meters (2)	Staging Area No. 1	Measure alpha contamination levels
Lab Swipe Counter (1)	Health Physics Lab	Measure alpha/beta contamination on swipes
Gamma Spectroscopy Systems (HPGe) (2)	Health Physics Lab	Gamma Spectroscopy
Hand and Foot Monitors (4)	Staging Area 1 Exit Staging Area No. 2 Exit Staging Area No. 4 Exit Equipment Room Exist	Measure potential contamination on hands and feet before leaving radiation restricted areas

Direct Reading Pocket Dosimeters (20)	Staging Area No. 1	Measure personnel gamma dose
Aluminum Oxide TLDs	Various onsite, on-base, and off-base locations	Measure environmental gamma radiation doses
Portable Air Sampler (1)	Staging Area No. 1	Collect grab air samples
Air Flow Velometer (1)	Sample Preparation Area	Measure ventilation flow rates
Air Flow Calibrator (1)	Health Physics Lab	Calibrate CAM air flows

** Monitors required by the TSs.

Equipment required by the TSs consists of the stack effluent, reactor room air, demineralizer area radiation, and reactor room area radiation monitors. The alarm setpoint for the stack effluent monitor is such that Argon-41 concentrations for unrestricted locations outside the operations area are less than the 10 CFR 20 limit of 1×10^{-8} µCi/ml.

Figure 11.3

Radiation Monitoring Equipment - Main Floor

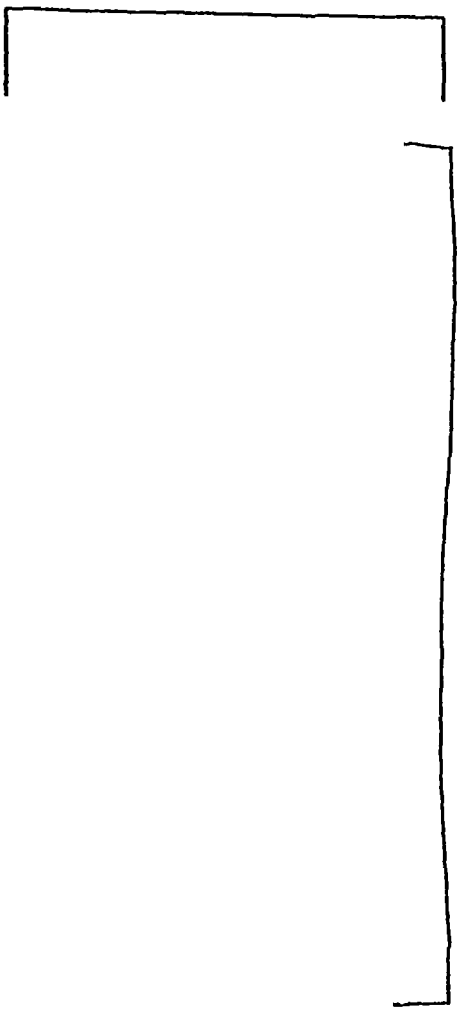

Figure 11.4
Radiation Monitoring Equipment - Second Floor

11.5.5 Environmental Monitoring

The MNRC has carried out an environmental radiation monitoring program since 1988. For about 2 years, the program collected preoperational data, but since 1990 has monitored the facility during operation. While many different types of samples have been collected and analyzed, to date there has been no indication that MNRC operations have impacted the environment, and there are no trends in environmental data which indicate that this might occur. This result is consistent with expectations for a facility of this type.

On an annual basis, the McClellan AFB Nuclear Safety Committee audits the MNRC environmental monitoring program and the environmental data generated by the program. As a result of this audit, modifications were made to improve the quality of the program.

The procedures for carrying out the environmental monitoring program are contained in the MNRC Health Physics Procedures (MNRC-0029-DOC). The procedures ensure a comprehensive monitoring program which incorporates an adequate number of sample types, collected at the appropriate frequencies, analyzed with sufficient sensitivity, and reported in a timely manner to provide an early indication of any environmental impacts.

With the exception of Ar-41, which was discussed earlier, and in view of MNRC policy of not discharging liquid radioactive materials down a sewer or as liquid effluents, there are virtually no pathways for radioactive materials from the MNRC to enter the unrestricted environment during normal facility operations. However, the MNRC environmental monitoring program was structured to provide surveillance over a broad range of environmental media even though there is no credible way the facility could be impacting these portions of the environment.

The current environmental monitoring program consists of the following basic components:

- direct gamma radiation measurements (in microR/hr) performed monthly at 26 on-base sites (1-20, 51, 54, 57, 60, and 64-65) and 9 off-base sites (27, 28, 31, 33, and 38-42). (Typical sensitivity ~ 5μR/hr.)

- integrated gamma dose measurements using thermoluminescent dosimeters (TLDs) which are exchanged quarterly at 35 on-base sites (1-20, 50-62, and 64-65) and 9 off-base sites (27, 28, 31, 33 and 38-42). (Typical sensitivity ~ 10 mrem/quarter)

- soil samples obtained quarterly at 6 on-base sites (1, 2, 5, 6, 7 and 12). (Typical sensitivity on the basis of average minimum detectable activity for gamma emitters ~ 0.03 pCi/gm)

- vegetation samples obtained quarterly at 6 on-base sites (1, 2, 5, 6, 7 and 12). (Typical sensitivity on the basis of average minimum detectable activity for gamma emitters ~ 0.5 pCi/gm)

- water samples obtained monthly from 3 on-base sites (Wells 10, 18 and 29). (Typical sensitivity on the basis of average minimum detectable activity for gamma emitters ~ 7 pCi/l)

Water, soil, and vegetation samples are submitted to Armstrong Laboratory, Brooks AFB, Texas, for analysis. Water samples are analyzed for gross alpha, gross beta, and tritium, and also undergo gamma spectroscopy. Soil and vegetation samples are analyzed for gross beta and undergo gamma spectroscopy. TLDs are processed by a contractor. All of the results are returned to McClellan for review and compilation.

11.5.6 Personnel Radiation Monitoring

The guidelines for maximum radiation doses and for airborne concentrations during normal operations of the MNRC reactor are contained in 10 CFR Part 20. Radiation doses to individuals could come from the following sources:

- radiography bays
- irradiated aircraft materials
- activation products
- maintenance activities

Personnel dosimetry devices in use at the MNRC have been selected to provide the monitoring of all likely radiation categories. Table 11.4 summarizes the devices typically used.

Table 11.4 Typical Personnel Monitoring Devices Used at the MNRC

Type	Dose	Radiation Measured
TLD	Deep Dose Equivalent Eye Dose Equivalent Shallow Dose Equivalent	Beta, Gamma
Albedo TLD	Deep Dose Equivalent	Thermal Neutrons
TLD Finger Ring	Extremity Dose Equivalent	Beta, Gamma
CR-39 Track Etch	Deep Dose Equivalent	Fast Neutrons

Personnel dosimeters are changed monthly. An administrative action level of 100 mrem in one month or 300 mrem in one quarter has been established. An exposure investigation is required if any action level is exceeded to determine the source of the exposure.

Since there are no normal routine operations at the MNRC which result in the potential for internal deposition of radionuclides, internal dosimetry is not a major personnel dosimetry consideration. At the present time, MNRC-employed personnel annually obtain a whole body count.

Personnel exposure reports are maintained by MNRC and are retained for the life of the facility. In addition, radiological survey data sheets which document worksite radiological conditions are maintained by MNRC and are retained for the life of the facility.

The average annual occupational exposure per person over the past 5 years has shown a steady decrease from a high of approximately 100 mrem per year to the current average of approximately 25 to 30 mrem per year. The projected average annual exposure for the 2 MW operation is expected to increase to approximately 50 to 60 mrem per year.

11.6 Radioactive Waste Management

The MNRC reactor program generates very modest quantities of radioactive waste. This is because of the type of program carried out at the facility and a conscious effort to keep waste volumes to a minimum. The objective of the radioactive waste management program is to ensure that radioactive waste is minimized, and that it is properly handled, stored and disposed.

The MNRC Health Physics Procedures, MNRC-0029-DOC, address the specific procedures for handling, storing and disposing of radioactive waste. These procedures include requirements stated in USAF T. O. 00-110N-3, "Requisition, Handling, Storage and Identification of Radioactive Material," USAF T. O. 00-110N-2, "Radioactive Waste Disposal," and 10 CFR Part 20.

The radioactive waste management program is audited as part of the oversight function of the McClellan AFB Nuclear Safety Committee (NSC). Waste management training is part of both the initial radiation protection training and the specialized training. It is also included in the annual refresher training.

Radioactive waste management records are maintained by the MNRC. Radioactive waste packages in storage are tracked by a computer-based radioactive material accountability system until shipment for disposal or transfer to an authorized broker. All records of shipments are retained for the life of the facility.

11.6.1 Gaseous Waste

Although Ar-41 is released from the MNRC stack in the facility ventilation exhaust, this release is not considered to be waste in the same sense as the solid waste collected and disposed of by the facility. Ar-41 is usually classified as an effluent that is routinely associated with normal reactor operation. In the MNRC facility, as in many nonpower reactors, there are no special off-gas collection systems for the Ar-41. Typically, this gas simply mixes with reactor room and other facility air and is discharged along with the normal ventilation exhaust. For the unrestricted area, the estimated maximum annual TEDE from Ar-41 at MNRC does not exceed 0.012 mSv (1.2 mrem), well below the limits specified in 10 CFR Part 20. A description of ventilation system features that serve to control releases of airborne radioactivity is contained in Section 11.1.5.2 of the McClellan SAR and is discussed in Section 6 of this SER.

11.6.2 Liquid Waste

Policy as prescribed by McClellan AFB does not permit the routine offsite release of radioactive liquid waste. Because normal MNRC operations create only small volumes of liquid containing radioactive material, it has been possible to convert liquids to a solid form and thus adhere to facility policy. McClellan AFB has committed to continue this practice for MNRC's 2-MW operation. Section 11.1.1.2 of the McClellan SAR describes the liquid radioactive sources associated with the MNRC reactor program. Accordingly, the reactor primary coolant is the only significant source. Since the primary coolant is by design contained to the maximum extent possible, there are no routine releases of this liquid and thus no significant volumes of liquid that require management as liquid waste. Certain maintenance operations, such as replacement of demineralized resin bottles, result in very small amounts of primary coolant being drained from the water purification loop, but this liquid is easily collected at the point of origin and converted into an approved solid waste form. Other liquid radioactive waste sources (e.g., laboratory wastes, decontamination solutions, and liquid spills) are very rare and are easily within the capability of the health physics staff to convert to solid form. The types and volumes of liquid generated are not expected to be significantly dependent on operating or use practices in the future.

11.6.3 Solid Waste

Procedures for managing solid waste are specified in Section 11.2.1 of the McClellan SAR. As with most nonpower reactors, solid low-level radioactive waste is generated from reactor maintenance operations and irradiations of various experiments. No solid radioactive waste is intended to be retained or permanently stored on the McClellan site. Appropriate radiation monitoring instrumentation will be used for identifying and segregating solid radioactive waste. Radioactive waste is packaged in metal drums or boxes within the restricted area of the MNRC and is temporarily stored in a weatherproof enclosure within the MNRC site boundary until shipment for disposal or transfer to a waste broker.

11.7 Conclusions

The staff concludes that radiation protection receives appropriate support from administrators and managers at McClellan AFB. On the basis of this review, the staff reached the following conclusions:

- The MNRC Radiation Protection Program is acceptably staffed and equipped.

- The MNRC reactor health physics staff has adequate authority and lines of communication.

- Radiation protection procedures are integral to the MNRC operations and the research program.

- Surveys verify that operations and procedures achieve ALARA principles.

- Effluent and environmental monitoring programs conducted by personnel from the MNRC health physics staff are adequate to identify significant releases of radioactivity promptly and to predict and identify maximum exposures to individuals in the unrestricted area. (These measured and predicted maximum levels have consistently been a very small fraction of applicable regulations and guidelines specified in 10 CFR Part 20.)

- The MNRC Reactor Radiation Protection Program is acceptably implemented as indicated by the absence of instances of reactor-related exposures of personnel at levels above applicable regulations. Further, no unidentified or uncontrolled significant amounts of radioactive material have been released to the unrestricted environment during past operations.

- There is reasonable assurance that MNRC personnel and procedures will continue to protect the health and safety of the public, the facility staff, and the environment from significant radiation exposures related to normal reactor operations for the duration of the license.

- Waste management activities at the MNRC reactor facility were conducted and can be expected to continue, in a manner consistent with both 10 CFR Part 20 and ALARA principles.

- MNRC systems and procedures limit the production of Ar-41 and N-16, and control potential for exposures by facility staff. Conservative computations (by both the applicant and the staff) of the quantities of these gases released beyond the boundary of the reactor facility give reasonable assurance that potential Ar-41 doses to the public would not be significant and would be far below applicable 10 CFR Part 20 limits.

- The radiation monitoring and sampling equipment give reasonable assurance that radiation will be detected, monitored, and sampled consistent with regulatory requirements and the MNRC ALARA program.

12 CONDUCT OF OPERATIONS

The conduct of operations involves the administrative aspects of facility operations and the facility's emergency, security, quality assurance and reactor operator requalification plans. Administrative aspects of facility operations are the facility organization, training, operational review and audits, procedures, reporting, and record keeping.

12.1 Overall Organization

Responsibility for the safe operation of the reactor facility is vested within the McClellan AFB Nuclear Operations Organization chain of command. The organizational structure is shown in Figures 12.1, 12.2, and 12.3.

The organizational structure shows the MNRC licensee as the Commanding General (Responsible Commander, SM-ALC/CC). The MNRC reactor is under the direct control of the facility director who is accountable to the Responsible Commander for the safe operation and maintenance of the reactor and its associated equipment. Both the reactor operations and health physics safety branches report to the facility director but have access to the Responsible Commander for issues that are unresolved at the facility director level.

The licensee has proposed minimum staffing requirements if the reactor is not shutdown. These requirements meet the regulations for staffing in 10 CFR 50.54(k) and 50.54(m)(1).

12.2 Training

The selection, training and requalification of operations personnel will meet or exceed the requirements of the American National Standard for Selection and Training of Personnel for Research Reactors (ANS 15.4). Training for reactor operators is conducted by MNRC personnel. The staff has reviewed Revision 3 of "MNRC Reactor Selection and Training Plan for Reactor Personnel," submitted as part of the application and concludes that the program meets the applicable regulations in 10 CFR 55. The program discusses the schedule of training, lectures, quizzes and written examinations, on-the-job training, oral and operating examinations, document review requirements, overall evaluation of operators, absence from licensed activities, exemptions to the program, record keeping, and administration of the program.

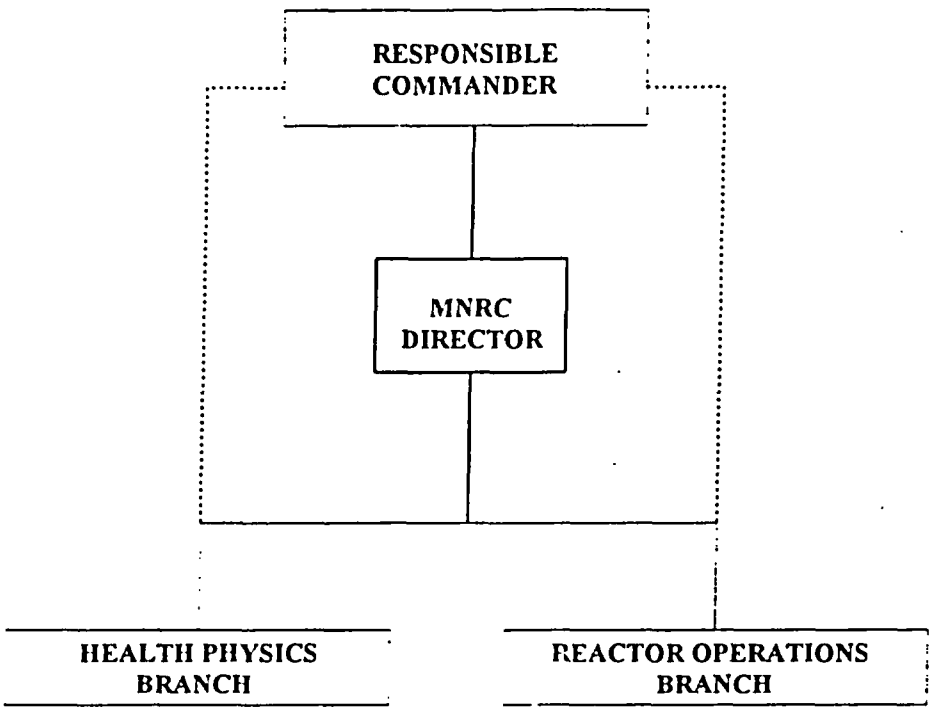

..... Path for issues unresolved at MNRC Director Level

Figure 12.1

McClellan Air Force Base Nuclear Operations Organization

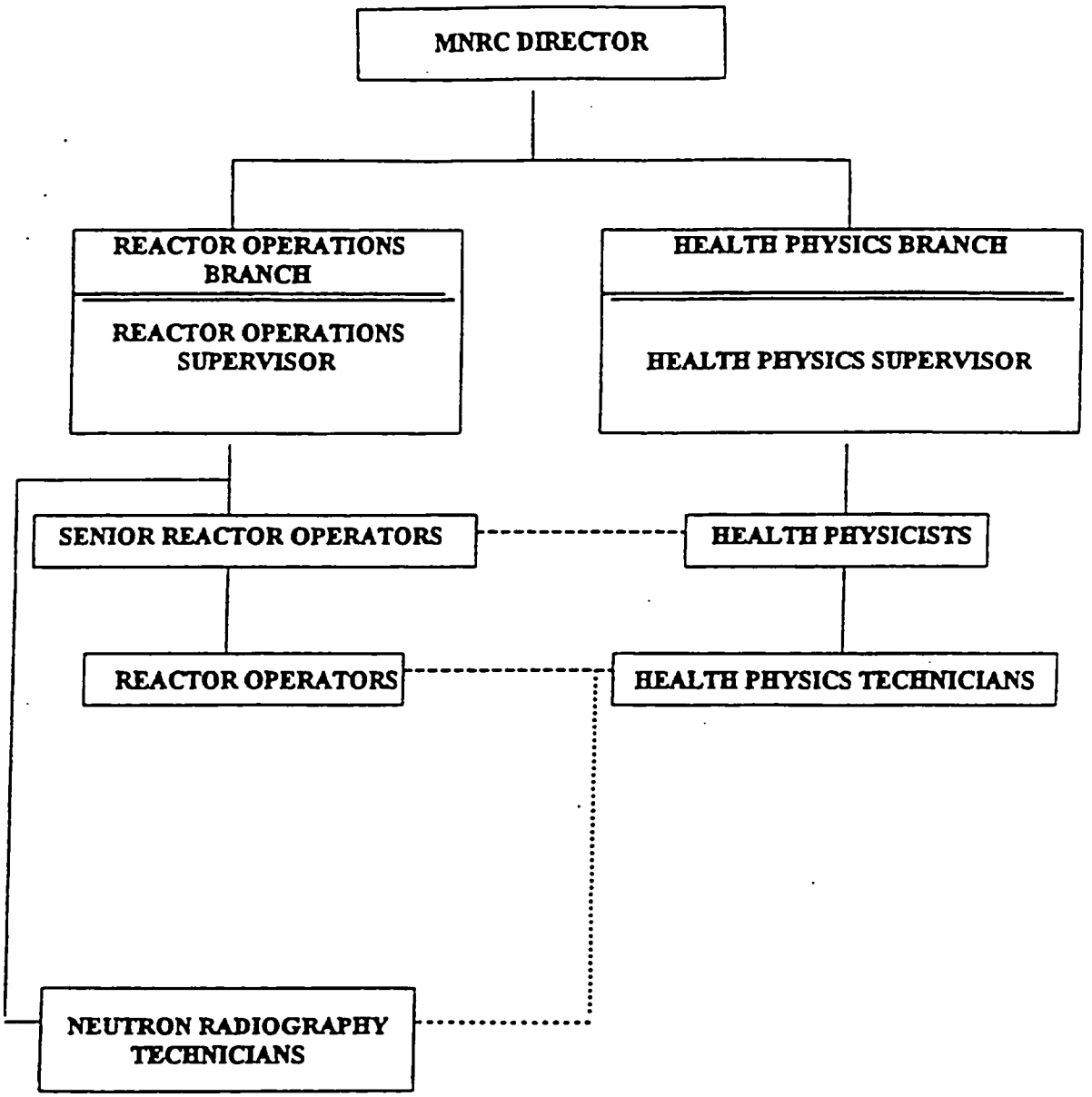

------ /..... WORKING INTERFACE

Figure 12.2

McClellan Nuclear Radiation Center (MNRC) Organization

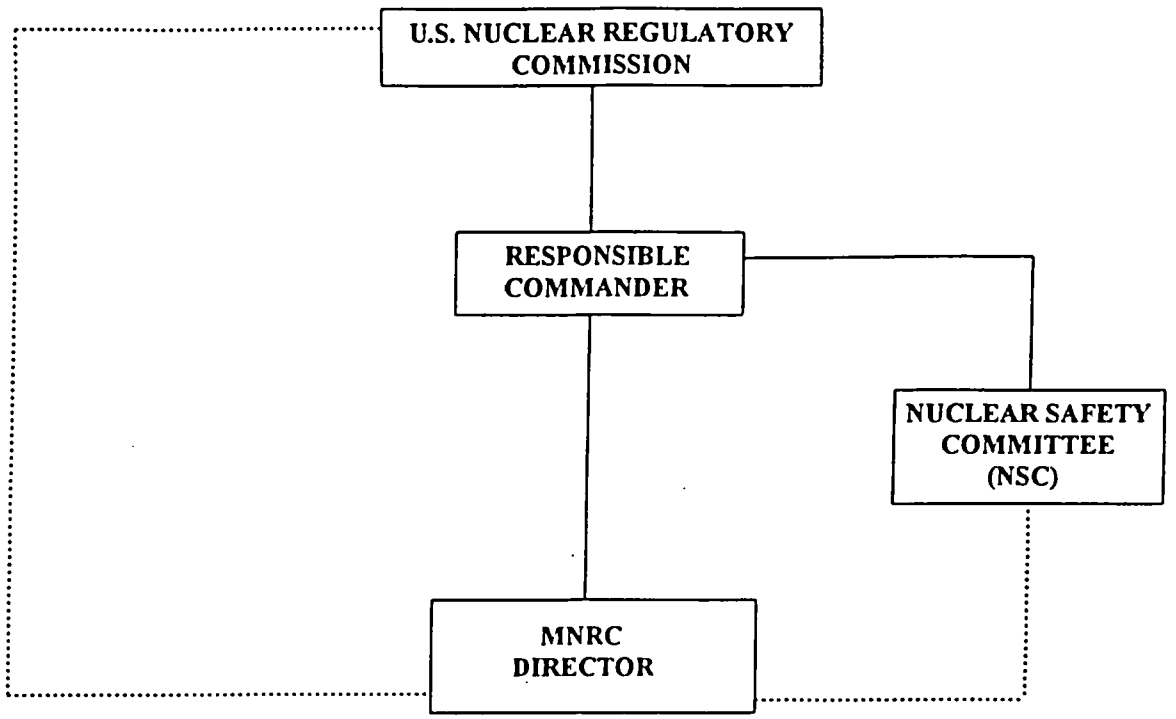

——— INDICATES NUCLEAR SAFETY AND LICENSING ROUTE

····· INDICATES NUCLEAR SAFETY AND LICENSING INFORMATION COPY ROUTE

Figure 12.3

Nuclear Safety and Licensing Organization

12.3 Operational Review and Audits

The general policy of the applicant is that nuclear facilities shall be designed, constructed, operated and maintained so that facility personnel, the general public and property are not exposed to undue risk. The Responsible Commander is responsible for instituting that policy as the facility license holder. The Nuclear Safety Committee (NSC) assists in meeting this responsibility by providing objective and independent reviews, evaluation, advice and recommendations on matters that affect nuclear safety.

The Responsible Commander appoints the chairman of the NSC. The chairman is responsible for appointing a committee of the least five members knowledgeable in nuclear safety fields. The NSC reports to the Responsible Commander. The NSC meets at least semi-annually and conducts its functions according to a written charter that includes provisions for meeting frequency, voting rules, quorums, presentations to the committee, use of subcommittees, and review, approval and dissemination of meeting minutes.

The NSC's review function includes the following:

- determination of whether a proposed change, test or experiment would constitute an unreviewed safety question according to10 CFR 50.59 or would require a change to the TSs
- review of approved experiments utilizing the reactor facilities
- review of proposed changes to the TS or SAR
- review of abnormal performance of facility equipment and operating anomalies
- review of reportable events
- review of operation and operational records for both reactor operations and health physics

The NSC is responsible for an annual inspection of reactor and health physics operations, to include

- inspection of the reactor operating and health physics records
- inspection of the reactor facility
- examination of reportable events
- determination of the adequacy of standard operating procedures
- verification of the effectiveness of the training program
- verification of conformance of operations with the operating license and TSs and applicable regulations

12.4 Procedures

The applicant has developed a comprehensive set of written operating procedures for all aspects of reactor facility operation. For reactor operations these procedures address the following activities:

(1) startup, operation, and shutdown of the reactor

(2) fuel loading, unloading, and movement within the reactor

(3) control rod removal or replacement

(4) routine maintenance of the control rod drives and reactor safety and interlock systems or other routine maintenance having an affect on reactor safety

(5) testing and calibration of reactor instrumentation and controls, control rods, and control rod drives

(6) administrative controls for operations, maintenance and for the conduct of irradiations and experiments that could affect reactor safety or core reactivity

(7) implementation of required plans such as the emergency plan and security plan

(8) necessary actions to correct specific and foreseen potential malfunctions of systems, including responses to alarms and abnormal reactivity changes

In the area of radiation protection these procedures address the following activities:

(1) testing and calibration of area radiation monitors, facility area monitors, laboratory radiation detection systems and portable radiation monitoring instrumentation

(2) working in laboratories and other areas where radioactive materials are used

(3) facility radiation monitoring program including routine and special surveys, personnel monitoring, monitoring and handling of radioactive waste, and sampling and analysis of solid and liquid waste, and gaseous effluents released from the facility which includes a management commitment to maintain exposures and releases

(4) monitoring radioactivity in the environment surrounding the facility

(5) administrative guidelines for the facility health physics program to include personnel orientation and training

(6) receipt of radioactive materials at the facility, and unrestricted release of materials and items from the facility which may contain induced radioactivity or radioactive contamination

(7) leak testing of sealed sources containing radioactive materials

(8) special nuclear material accountability

(9) transportation of radioactive materials

All procedures must be prepared and approved before initiating any of the above activities. All procedures or changes to procedures must be approved by the facility director. The MNRC staff performs a periodic review of procedures to assure that the procedures are current.

12.5 Reporting and Records Requirements

12.5.1 Reports

Reports are used to describe unplanned events as well as planned facility operation and administrative changes.

12.5.1.1 Special Reports

The following eight reportable events are reported to NRC within 24 hours with a written report submitted within 14 days:

(1) any accidental release of radioactivity into unrestricted areas above applicable unrestricted area concentration limits, whether or not the release resulted in property damage, personal injury or exposure

(2) any violation of the Safety Limit (SL)

(3) operation with an LSSS less conservative than that specified in Section 2.0 of the TSs

(4) operation in violation of a Limiting Condition for Operation (LCO)

(5) failure of a required reactor or experiment safety system component which could render the safety system incapable of performing its intended safety function unless the failure is discovered during maintenance tests or a period of reactor shutdown

(6) any unanticipated or uncontrolled change in reactivity greater than $1.00

(7) an observed inadequacy in the implementation of either administrative or procedural controls, such that the inadequacy could have caused the existence or development of a

condition which could have resulted in operation of the reactor outside the specified safety limits

(8) a measurable release of fission products from a fuel element

The written report shall describe, analyze, and evaluate safety implications and outline the corrective measures taken or planned to prevent recurrence of the event.

A report is made to the NRC in writing within 30 days of the following four events:

(1) any significant variation of measured values from a corresponding predicted or previously measured value of safety-connected operating characteristics occurring during operation of the reactor

(2) any significant change in the transient or accident analysis as described in the SAR

(3) any change in facility organization or personnel

(4) any observed inadequacies in the implementation of administrative or procedural controls such that the inadequacy causes or could have caused the existence or development of an unsafe condition regarding reactor operations

12.5.1.2 Required Actions

Required actions to be taken by the applicant are as follows:

For the violation of the safety limit (Section 2.0 TS)

(1) The reactor shall be shut down and reactor operations shall not be resumed until authorized by the NRC.

(2) The safety limit violation shall be promptly reported to the MNRC Director.

(3) The safety limit violation shall be reported to the chairman of the NSC and to the NRC by the MNRC Director.

(4) A safety limit violation report shall be prepared.

For reportable occurrences

(1) Reactor conditions shall be returned to normal or the reactor shall be shut down. If it is necessary to shutdown the reactor to correct the occurrence, operations shall not be resumed unless authorized by the MNRC Director or designated alternate.

(2) The occurrence shall be reported to the MNRC Director or designated alternate. The MNRC Director shall report the occurrence to the NRC as required by the TSs.

(3) All occurrences shall be reported to the NSC at the same time the NRC is notified.

12.5.1.3 Annual Operating Report

A calendar year annual operating report shall be prepared and submitted to the NRC in accordance with TS 6.7.1. The annual report shall be submitted within 6 months following the end of the calendar year and shall contain at least the following six items:

(1) a brief summary of operating experiences including experiments performed, changes in facility design, performance characteristics and operating procedures related to reactor safety occurring during the reporting period, and results of surveillance tests and inspections

(2) a tabulation showing the energy generated by the reactor (in megawatt hours), hours the reactor was critical, and the cumulative total energy output since initial criticality

(3) the number of emergency shutdowns and inadvertent scrams, and related reasons

(4) discussion of the major maintenance operations performed during the period, including the effect, if any, on the safety of the operation of the reactor and the reasons for any required corrective maintenance required

(5) a brief description, including a summary of the safety evaluation, of changes in the facility or in procedures, and of tests and experiments carried out pursuant to Section 50.59 of 10 CFR Part 50

(6) a summary of the nature and the amount of radioactive effluent released or discharged to the environment beyond the effective control of the licensee as measured at or before the point of such release or discharge, including the following:

(a) Liquid Effluents (summarized on a monthly basis)

- Liquid radioactivity discharged during the reporting period tabulated as follows:

  - the total estimated quantity of radioactivity released (in curies)

  - an estimation of the specific activity for each detectable radionuclide present if the specific activity of the released material after dilution is greater than 1×10^{-7} microcuries/ml

  - a summary of the total release in curies of each radionuclide determined above for the reporting period on the basis of representative isotopic analysis

  - an estimated average concentration of the released radioactive material at the point of release for each month in which a release occurs, in terms of microcuries/ml and the fraction of the applicable concentration limit in 10 CFR Part 20

- the total volume (in gallons) of effluent water (including diluent) released during each period of liquid effluent release

(b) Airborne Effluents (summarized on a monthly basis)

- airborne radioactivity discharged during the reporting period (in curies) tabulated as follows:

  - the total estimated quantity of radioactivity released (in curies) determined by an appropriate sampling and counting method

  - the total estimated quantity (in curies) of Ar-41 released during the reporting period on the basis of data from an appropriate monitoring system

  - the estimated maximum annual average concentration of Ar-41 in the unrestricted area (in microcuries/ml), the estimated corresponding annual radiation dose at this location (in mrem), and the fraction of the applicable 10 CFR Part 20 limits for these values

  - the total estimated quantity of radioactivity in particulate form with half lives greater than 8 days (in curies) released during the reporting period as determined by an appropriate particulate monitoring system

  - the average concentration of radioactive particulates with half lives greater than 8 days released (in microcuries/ml) during the reporting period

(c) Solid Waste (summarized on an annual basis)

- the total amount of solid waste packaged (in cubic feet)
- the total activity in solid waste (in curies)
- the dates of shipment and disposition (if shipped offsite)

(7) an annual summary of the radiation exposure received by facility operations personnel, by facility users, and by visitors in terms of the average radiation exposure per individual and the greatest exposure per individual in each group

(8) an annual summary of the radiation levels and levels of contamination observed during routine surveys performed at the facility in terms of average and highest levels

(9) an annual summary of any environmental surveys performed outside the facility

12.5.2 Records

Records may be in the form of logs, data sheets, or other suitable forms. The required information may be contained in single or multiple records, or a combination thereof.

12.5.2.1 Lifetime Records.

The following five records are retained for an indefinite period of time (lifetime of the facility).

(1) offsite environmental monitoring surveys

(2) fuel inventories and transfers

(3) facility radiation and contamination surveys

(4) radiation exposures for all personnel

(5) updated, corrected, and as-built drawings of the facility

12.5.2.2 Five Year Records.

The following six records are to be retained for a period of 5 years:

(1) normal reactor facility operations

(2) principal maintenance activities

(3) operating and special reports

(4) equipment and component surveillance activities required by the TSs

(5) experiments performed with the reactor

(6) airborne and liquid radioactive effluents released to the environments and solid radioactive waste shipped

12.6 Emergency Planning

As required in 10 CFR Part 50.54(q) and (r), an applicant who is authorized to possess and/or operate a research reactor shall follow and maintain in effect an emergency plan that meets the requirements of Appendix E to 10 CFR Part 50. In 1983, RG 2.6 was issued to provide specific guidance to non-power reactor licensees for their emergency response plans. Accordingly, the staff reviewed the McClellan Emergency Plan (MNRC-0001-DOC-04) submitted as part of the application. During its review the staff considered the applicant's discussion of emergency organization and responsibilities, emergency classification system, emergency action levels, emergency planning zones, emergency response, emergency facilities and equipment, recovery from emergencies and maintaining emergency preparedness. The staff concluded that this plan is in compliance with applicable portions of Appendix E to 10 CFR Part 50, and consistent with RG 2.6.

12.7 Physical Security Plan

The applicant has established and maintains a security program to protect the reactor and its fuel. Accordingly, the staff reviewed the McClellan Physical Security Plan submitted under 10 CFR Part 50.54(p). The staff reviewed the applicant's discussion of the following requirements:

- use and storage areas
- detection devices and procedures for early detection of unauthorized access or activities and detection through monitoring controlled access areas
- access control at the MNRC
- the security organization, communications, response procedures, material transportation requirements and receiver requirements
- in-transit physical protection requirements and export and import requirements

The staff concludes that the plan meets the requirements of 10 CFR Part 73.67(d) as it relates to the fixed-site protection of special nuclear material of moderate strategic significance. The McClellan inventory of special nuclear material for reactor operations at the MNRC falls within this category. The McClellan Physical Security Plan is withheld from public disclosure under 10 CFR Part 2.790(d)(1).

In accordance with 10 CFR 73.60(f), the staff also considered if any additional measures are deemed necessary to protect against radiological sabotage. Because, among other reasons, the MNRC is located on an active AFB where access is controlled through armed entry points requiring identification, additional measures are not required.

12.8 Quality Assurance

The Quality Assurance (QA) Program for the MNRC (MNRC-0045-DOC-00) contains detailed information concerning the MNRC QA program elements and their implementation. The QA program provides criteria for design, construction, operation, and decommissioning of the MNRC reactor facility. The level of QA effort applied to the MNRC reactor activities is consistent with the importance of these activities relative to safety. The activities included in the QA program are those related to reactor safety and applicable radiation monitoring systems.

12.9 Conclusions

On the basis of the information in the applicant's SAR, proposed TSs, emergency plan, security plan, operator requalification plan, and quality assurance plan, the staff concludes the following:

- The applicant has described administrative aspects of facility operations. The TSs associated with administrative aspects of facility operations are in substantial conformance with the guidance in ANSI/ANS 15.1-1990, "The Development of Technical Specifications for Research Reactors" which is generally accepted by the NRC staff for the format and content of administrative TSs. The staff finds that the administrative TSs in Section 6 of the applicant's TSs are acceptable.

- The applicant has presented an organizational structure that contains all organizational relationships important to safety, including a review and audit function and a radiation safety function. The responsibility for safe operation of the facility and for the protection of the health and safety of the public and the facility staff is clearly shown. The radiation safety organization has access to upper management. Facility staffing for various operational situations meets the requirements of the regulations. The staff finds that the organization and staffing of the MNRC are acceptable.

- Training for staff members will be conducted at an acceptable level. The applicant has submitted a reactor operator requalification plan that contains information that meets the requirements of 10 CFR Part 55. The plan gives reasonable assurance that the reactor facility will be operated by competent operators and is acceptable.

- The applicant has proposed a review and audit function for the MNRC. The charter and rules for the NSC describe meeting frequency, business conduct, quorum voting requirements, and distribution of reports and reviews. The charter and rules for the NSC meets the guidance in ANSI/ANS 15.1 and are acceptable. The applicant has proposed a list of items that the NSC will review and audit which is comprehensive and is acceptable.

- The applicant has proposed required procedures for both reactor operations and radiation protection. The staff has determined that the proposed set of procedures are

complete and appropriate to the operation of the MNRC. The applicant has described the review and approval process for new procedures and for making substantial and minor changes to existing procedures. The staff has determined that the process and method described by the applicant will ensure proper management control and proper review of procedures.

- The applicant has defined a group of incidents as reportable events and has described the required actions it will take if a reportable event occurs. The applicant has also proposed actions to be taken if a safety limit is violated. The definition of reportable events proposed by the applicant gives reasonable assurance that safety significant events will be reported to the NRC in a timely manner and is acceptable to the staff. The staff has determined that the applicant will take necessary actions to protect the health and safety of the public if a safety limit is violated.

- The staff concludes that the applicant has described the content and the timing of submittal of reports to the NRC to ensure that important information will be provided to NRC in a timely manner.

- The staff concludes that the applicant has described the types of records that will be retained by the MNRC and the period of retention to ensure that important records will be retained for an appropriate period of time.

- The applicant has submitted an emergency plan for the MNRC. The staff concludes that this plan is in compliance with applicable portions of Appendix E to 10 CFR Part 50.

- The applicant has submitted a security plan for the MNRC. The staff concludes that this plan is in compliance with the applicable portions of 10 CFR 73.67 for special nuclear material of moderate strategic significance.

- The applicant has submitted a QA program for the MNRC. The QA plan along with the surveillance requirements in the TSs help to ensure that activities important to safety will be properly conducted and that components important to safety will be properly tested and maintained.

13 ACCIDENT ANALYSIS

13.1 Accident Analysis

To establish SLs, LSSSs, and LCOs for the McClellan TRIGA reactor, the applicant analyzed anticipated potential reactor transients and other potential and hypothetical accidents. Specifically, the applicant analyzed the potential consequences of such events on the reactor fuel and on the radiological health and safety of the public. The staff then evaluated the applicant's assumptions, analytical methods, and results.

The NRC has prepared an independent analysis of credible accidents for TRIGA reactors. This study was documented in NUREG/CR-2387, "Credible Accident Analysis for TRIGA and TRIGA-Fueled Reactors" (Ref. 8). The staff has used applicable information from NUREG/CR-2387 as a basis for evaluating some of the information presented in this chapter of the McClellan SAR.

The reactor physics and thermal-hydraulic conditions associated with the normal long-term operation of the McClellan TRIGA reactor at a power level of 2 MW (2.3 MW for short times to test the power level scrams) are discussed in Chapter 4 of this SER. The SL, LSSS, and LCOs are determined primarily on the basis of those analyses. The results of the thermal-hydraulic analysis indicate that the MNRC reactor could operate at 3 MW or greater before fuel damage would occur. The NRC staff concludes that the thermal-hydraulic analysis is acceptable. The analyses of accidents in this section are intended to further the evaluation of the consequences of off-normal behavior.

The maximum allowable fuel temperature imposes limits for both steady-state and pulse modes of operation. These limits stem from the outgassing of hydrogen from U-ZrH fuel and the subsequent stress produced in the cladding material of the fuel elements. The strength of the cladding as a function of temperature establishes an upper limit on the fuel temperature.

Nine potential credible accidents for research reactors were identified in NUREG-1537 (Ref. 9), as follows:

- the maximum hypothetical accident (MHA)

- insertion of excess reactivity
- LOCA
- loss-of-coolant flow
- mishandling or malfunction of fuel
- experiment malfunction
- loss of normal electrical power
- external event
- mishandling or malfunction of equipment

For those potential events that could result in the release of radioactive materials from fuel, a qualitative evaluation of the event is presented in the McClellan SAR. Events leading to the release of radioactive material from a fuel element were analyzed until it was possible to reach the conclusion that a particular event was, or was not, the limiting event in that accident category. The MHA for TRIGA reactors, including the MNRC reactor, is a cladding failure of a single irradiated element in air in the reactor room, assuming there is no radioactive decay of contained fission products.

13.2 Maximum Hypothetical Accident

The MHA for the MNRC reactor has been defined as a cladding rupture in air of a single highly irradiated fuel element with no decay, followed by instantaneous release of fission products into the reactor room. The failed fuel element was assumed to have operated at the highest core power density for a continuous period of 1 year at a power level of 2.0 MW. Although a power level of 2.3 MW is permissible for a short time to test the high power scram system, the integrated power (fission product inventory) from this testing, when compared to the 1 year continuous operation, is insignificant. This is the most severe accident for a TRIGA and has been analyzed to determine the limiting or bounding potential radiation doses to the reactor staff and to the general public in unrestricted areas.

The results of the dose calculations for the MHA are shown in Tables 13.1 and 13.2. Doses inside the reactor room and at several locations in the unrestricted area outside the MNRC fence (10–100 meters from the building) are shown as a function of weather class. Results are reported for the committed dose equivalent (CDE) to the thyroid (because of iodine isotopes),

committed effective dose equivalent (CEDE) because of inhalation, deep dose equivalent (DDE) resulting from air immersion, and TEDE resulting from adding the CEDE and the DDE.

Table 13.1
Radiation Doses in the MNRC Reactor
Room After an MHA (Cladding Failure in Air) Accident

	CDE Thyroid	CEDE	DDE	TEDE
2-min room occupancy	46.4 mSv 4,640 mrem	1.4 mSv 140 mrem	0.4 mSv 40 mrem	1.8 mSv 180 mrem
5-min room occupancy	115 mSv 11,500 mrem	3.6 mSv 360 mrem	0.94 mSv 94 mrem	4.54 mSv 454 mrem

Table 13.2
Radiation Doses to Members of the General Public
Under the Most Conservative Atmospheric Conditions (Pasquill F)
at Different Distances from the MNRC
After a Fuel Element Cladding Failure in Air with No Decay (MHA)

Distance (Meters)	CDE Thyroid	CEDE	DDE	TEDE
10	16.94 mSv 1,694 mrem	0.53 mSv 53 mrem	0.13 mSv 13 mrem	0.66 mSv 66 mrem
20	13.3 mSv 1,330 mrem	0.42 mSv 42 mrem	0.099 mSv 9.9 mrem	0.52 mSv 52 mrem
40	0.9 mSv 90 mrem	0.029 mSv 2.9 mrem	0.067 mSv 6.7 mrem	0.096 mSv 9.6 mrem
80	0.52 mSv 52 mrem	0.017 mSv 1.7 mrem	0.037 mSv 3.7 mrem	0.054 mSv 5.4 mrem

100	0.42 mSv 42 mrem	0.013 mSv 1.3 mrem	0.03 mSv 3.0 mrem	0.043 mSv 4.3 mrem

As indicated by the results in Table 13.1, the dose to workers who evacuate the reactor room within 5 minutes after an instantaneous MHA would be approximately 4.54 mSv (454 mrem) TEDE and 115 mSv (11,500 mrem) CDE to the thyroid. If evacuation were to occur within 2 minutes, as is likely because the reactor room is small and easy to exit, the doses drop to 1.18 mSv (180 mrem) TEDE and 46.4 mSv (4640 mrem) CDE. All these doses are well within the NRC limits for annual routine occupational doses as stated in 10 CFR Part 20.1201. Projected doses to the general public in the unrestricted area around the MNRC after an MHA are shown in Table 13.2. To receive the indicated dose, a person must be exposed to the airborne plume from the reactor exhaust stack for the entire 9.2 minute period that the reactor room is being vented. Using this exposure criterion at the closest distance to the MNRC building (security fence at 10 meters), and assuming the most unfavorable atmospheric conditions (Category F), the maximum TEDE to a member of the general public would be 0.66 mSv (66 mrem). Although this accident and the corresponding radiation doses are not considered to be credible, the maximum estimated dose of 0.66 mSv (66 mrem) to the general public is within the 1-mSv (100-mrem) TEDE annual limit for the general public stated in 10 CFR Part 20.1301. Furthermore, the above analysis clearly shows that the MNRC can be subjected to current MHA criteria and that maximum doses will remain within annual limits established by the NRC for routine occupational radiation exposure as well as for exposures to members of the general public. Should a total fuel-clad failure of one fuel element occur after 48 hours of fission-product decay, the maximum TEDE to the public would drop to approximately 0.34 mSv (34 mrem).

13.3 Insertion of Excess Reactivity

A credible generic accident is the inadvertent rapid insertion (pulse insertion) of positive reactivity which, if large enough, could produce a transient resulting in fuel overheating and a possible breach of cladding integrity. Operator error or failure of the automatic power level control system could cause a slower event to occur because of the uncontrolled withdrawal of multiple control rods. Flooding or removal of beam tube inserts could also have a positive effect on reactivity but not as severe as the rapid removal of a control rod. The inherent prompt negative temperature response characteristics of TRIGA fuels clearly is a safety factor for this type of postulated accident.

The applicant has presented in the SAR, Section 13.2, an analysis of the rapid reactivity insertion accident. The staff reviewed that analysis and has compared the results of the analysis with NUREG/CR-2837, "Credible Accident Analysis for TRIGA and TRIGA Fueled Reactors," (Ref. 8) and NUREG-1282, "Safety Evaluation Report on High-Uranium Content, Low-Enriched Uranium-Zirconium Hydride Fuels for TRIGA Reactors" (Ref. 10). In summary, the analysis concludes (SAR Section 3.2.2.2.1) that the maximum rapid reactivity insertion under the worst conditions (end-of-life of the fuel) that can be allowed is $1.92 before a fuel temperature would be reached that might result in fuel cladding failure and subsequent fission-product leakage. Since the maximum rapid insertion of reactivity (pulse insertion) is limited to $1.75, the MNRC reactor fuel should not approach the limit where fuel cladding failure could lead to fission products escaping into the reactor coolant. Therefore, there is reasonable assurance that no radiation exposures will occur as a result of this event.

The applicant has analyzed the uncontrolled withdrawal of a single rod (SAR 13.2.2.2.2). The analysis assumes a single rod withdrawn at the maximum speed of 107 cm/minute (42 inches/minute), as opposed to the normal withdraw speed of 61 cm/minute (24 inches/minute).. The maximum single rod worth for the reference loading of SAR Section 4.5.5 is $2.65, but a rod worth of $3.50 was used to allow for reasonable variations about the reference loadings. The most unfavorable initial control rod position is assumed to be 32 percent inserted, since this position corresponds to the worst-case condition of highest fuel-element power. Two initial power conditions are analyzed; 100 watts and 2 MW. The Dynamic Simulator for Nuclear Power Plants (DSNP) code was used to solve the one-group point kinetics equation with a delayed neutron fraction of 0.007 and a decay constant of 0.405/second (Reference 13.6). The result is that the reactivity insertion rate is $0.23/second.

With initial power at 100 watts, an average fuel temperature of 35°C and a trip setpoint of 2.3 MW, power level reaches the trip setpoint at 4.26 seconds. Adding an additional 0.5 seconds for actual release of the rods, the peak reactivity inserted is $1.18, much less than the limiting rapid reactivity insertion for the pulse accident. A rod fall time of 2 seconds is assumed.

With initial power at 2 MW, an average fuel temperature of 257.2°C and a trip setpoint of 2.3 MW, power level reaches the trip setpoint in 0.54 seconds. Again, when adding 0.5 seconds for the actual release of the rods, the peak reactivity inserted is $0.25.

In order to envelope the accidents associated with uncontrolled withdrawal of control rods, the applicant analyzed the withdrawal of five control rods. This includes the case where the (up to) three rods controlled by the servocontrol system are withdrawn as a result of system failure. This accident was analyzed using a measured rod worth profile and a total control rod worth for all rods of $17.50. This accident assumed a normal rod withdraw speed of 61 cm/minute (24 inches/minute). Again, starting from a 32 percent inserted position, the rate of reactivity addition is $0.66/second. This reactivity addition rate scales directly from the previous case of a single rod ($3.50 at 107 cm/minute [42 inches/minute].) Starting at 100 watts, the trip level of 2.3 MW is reached at 1.73 seconds with the scram occurring at 2.23 seconds. The reactivity inserted at the time all rods are released is $1.52. A transient at this rate of insertion ($1.52) is less severe than the rapid positive reactivity insertion accident. For five rods to add reactivity simultaneously, there must be multiple failures in the control system. Therefore, this accident is not considered to be credible.

The staff analyzed the failure of the servocontrol system (2 rods plus the regulating rod withdrawn) under more restrictive assumptions. The staff assumed that the withdrawal occurs at the maximum withdraw speed of 107 cm/minute (42 inches/minute) (same as for previously discussed single rod withdrawal) and that 1 second elapses from the time the scram signal is received until release of the rods, rather than 0.5 seconds. (The TS requirement for control rod insertion because of a scram is a maximum of 1 second from the time a scram signal is received to the slowest rod reaching the fully inserted position.) The reactivity of 2 control rods plus the regulating rod is approximately $5.83 (SAR Table 4-14). Starting at 100 watts, the time elapsed before the rods start to insert is 4.20 seconds. The reactivity addition rate is $0.38/second. The reactivity inserted at the time all rods are released is $1.60, which is less severe than the rapid positive reactivity insertion accident ($1.75). The staff concludes that there is no safety concern associated with this scenario.

In the event of flooding of one or more beam tubes, air or inert gas would be substituted with water. This will constitute a positive reactivity addition. It has been estimated that the worth of one flooded beam tube is about $0.25. This amount of excess reactivity is well below the limits discussed in the rapid reactivity insertion accident; therefore, it does not represent a safety-significant event.

During the removal of the in-tank section of a beam tube, air and graphite will be replaced by water because a portion of the graphite reflector is removed with this section of the beam tube. Again, replacement of the air/gas with water results in a positive effect on reactivity. The net result will be a smaller reactivity addition than for beam tube flooding so this action is of even less overall consequence.

13.4 Loss-of-Coolant Accident

Loss of coolant from the MNRC reactor could occur through one of two ways, pumping water from the reactor tank or reactor tank failure. These accidents are analyzed below.

13.4.1 Pumping of Water from the Reactor Tank

The intake for the primary-cooling-system pump is located about 1 m (3 ft) below the normal tank water level. In addition, the line is perforated from about 0.2 m (8 in) below the normal tank water level to the intake line entrance. The intake for the purification-system pump is through a short, flexible line attached to a skimmer that floats on the surface of the tank water. However, the length of the flexible line is such as to cause loss of pump suction if the tank water level is lowered about 1.3 m (4 ft). Thus, the reactor tank cannot be accidentally pumped dry by either the primary pump or the purification-system pump. Also, it is not possible for other cooling system or water cleanup system components to fail and syphon water from the tank since all of the primary-water-system and purification-system piping and components are located above the normal tank water level.

13.4.2 Reactor Tank Failure

A hole in or near the bottom of the reactor tank could cause the water level to drop below the top of the fuel elements. This event could occur either during reactor operation or while the reactor was shut down and unattended. There are no nozzles or other penetrations in the reactor tank below the normal water level, so the only mechanisms that could cause tank failure are corrosion of the tank or a mechanical failure. Leaks caused by corrosion would unquestionably be small leaks, which are detected before the water level is lowered significantly. In such a case, makeup water could be supplied by the AMUWS until the reactor was unloaded or the leak repaired. Provisions to monitor for and collect tank leakage were incorporated into the facility design. First, the tank is surrounded by corrugated metal. The corrugations provide a path to the bottom of the tank for any water leakage from the walls.

Second, a drain within the bulk shield surrounds the bottom of the tank. This drain will collect any water that may leak from the tank walls or bottom (SAR Chapter 5.2.) Third, a duct leads from the drain to Radiography Bay 1, and the exit of this duct is periodically monitored for water leakage. If leakage is detected, the water could be easily collected at this point or diverted to the liquid holdup tank outside the building.

Consequences of a slow tank leak would be minimal and would require collection and containment of the water which leaked from the tank. This would be easily accomplished by using the existing liquid effluent control system. Small tank leaks as a result of corrosion are normally repairable using conventional techniques for patching aluminum, and thus it is expected that a leak could be located and fixed before there would be any significant loss of water from the tank.

An earthquake of much greater intensity than the UBC Zone III earthquake appears as the only credible mechanism for causing a large rupture in the tank, since the tank, when supported by its associated biological shield structure, was designed (with an importance factor of 1.5) to withstand a UBC Zone III magnitude earthquake. Even if such an event is assumed to cause very rapid loss of water while the reactor is operating at peak power, a reactor shutdown would be caused by voiding water from the core, even if there was no scram. The ECCS system will function to cool the core to maintain fuel temperatures below the design basis limit.

A large rupture of the tank would obviously result in a more rapid loss of water than a leak as a result of corrosion or a minor mechanical failure in the tank wall. The MNRC reactor tank has no breaks in its structural integrity (i.e., there are no beam tube protrusions or other discontinuities in the reactor tank surface). In addition, the reactor core is below ground level. Thus, the potential for most types of leaks is minimized.

The 2-MW MNRC reactor includes a cavity (Bay 5) cut into the biological shield. This cut exposes the reactor tank wall below the reactor core level and introduces added potential for an accident that could drain water from the core area. Although steps have been taken to control the probability of a tank rupture in this location (the applicant regards the likelihood of such a rupture as very low), an unplanned occurrence could nevertheless initiate such an event. Therefore, an ECCS was installed to cool the core with water until the fuel decay heat has

decreased to a level where air cooling is adequate to maintain fuel temperatures below the design basis (safety) limit. The staff has reviewed the ECCS in detail and concludes that its design and operating features are adequate to perform its intended function. Any release of radioactive materials are covered by the MHA.

An analysis detailing the cooling capabilities of the ECCS is described in the following sections. This analysis does not postulate the occurrence of a particular initiating sequence of events leading to all fuel elements in the core being uncovered. Instead, it simply assumes that the tank has ruptured and all the water is lost. Such an event has several different consequences. First, there is a possibility of fuel clad rupture should the fuel temperature exceed the safety limit. It is the purpose of this analysis to address the action of the ECCS to prevent fuel temperatures from reaching safety limits. Second, there is a possibility of personnel exposure to radiation from the uncovered reactor core because of the direct beam from the core or from radiation scattered from the reactor walls and ceiling. Finally, there is a chance that the lost water could cause ground water contamination.

13.4.3 Description of ECCS and Assumptions

A LOCA is postulated for the MNRC in which the reactor pool is rapidly drained of water during operation at 2 MW (it is assumed that the reactor has been running at 2 MW for an infinitely long time). Because the LOCA uncovers the core quickly, the fuel clad temperature in some of the centrally located fuel elements could exceed the safety limit of 930°C.

When the reactor tank water level drops below the normal operating range (typically a loss of approximately 6 inches of water) a tank low-level alarm sounds. This alerts the operator that action must be taken. Depending upon the rate of water loss, the suspected cause of the loss, and other considerations, several different actions may be taken by the operator in response to a reduction in the tank water level. One such action is to activate the ECCS.

Upon activating the ECCS, cooling water from the domestic water supply will be introduced into the reactor tank and maintained until the fuel no longer contains sufficient decay heat to present a threat to the fuel cladding or water is restored to a level above the core. If the tank water level has dropped to less than about 0.6 m (2 ft) above the core, water from the ECCS will be sprayed onto the top of the remaining water column above the core. However, if the tank

water has dropped below or partially below core level, the ECCS water will be sprayed directly onto the core since the spray nozzle is located about 0.6 m (2 ft) above the core. During this time, the decay heat will be removed by the remaining tank water or by the water spray and the maximum fuel temperature will be reduced rapidly from an elevated operating temperature down to about 200°C and then gradually to 100°C with continued spray cooling.

At the end of spray cooling for a period of about 3.5 hours, natural air convection will be established in the core. During this cooling phase, the temperature of the fuel will slowly rise over several hours to a maximum and then decrease with continued air cooling. The maximum fuel and cladding temperature is controlled by the length of spray cooling and by the natural air cooling. Under the preceding conditions, no fuel cladding ruptures will occur.

The ECCS (discussed in Section 6.1 of this SER) consists of a quick connect system for coupling to the domestic water supply, sensing devices to indicate the need to initiate emergency cooling water flow, a nozzle to distribute the coolant flow over the core, a chimney mounted above the core structure to provide a sufficient channel length for maintaining sufficient air flow through the core, and a ventilation system to provide air circulation through the reactor room.

Measurements by GA indicate that both the nozzle type as well as its location and orientation are important to provide the required cooling spray. Results also showed that a total spray flow of 20 gpm from the nozzle located approximately 0.6 m (2 ft) above the top grid plate will assure that adequate core spray cooling is available to meet the requirements. (Spray flow required to cool the fuel to 100°C from 2 MW operation corresponds to 12.3 gpm through the core.) Provisions were established to ensure that sufficient spray cooling water is supplied to the MNRC reactor core when needed from the building domestic water supply.

13.4.4 Air Cooling

The relatively small size (~7500 cu-ft) of the reactor room can affect the convective air cooling of the reactor core after spray cooling ceases. In the small reactor room, hot air from the core is expected to overload the air conditioning system and raise the ambient air temperature. The air flow in the reactor room during normal operation is as follows. An exhaust flow of 800 cfm passes through absolute filters on the way to the stack. Of this 800 cfm, 500 cfm comes from

the air conditioning system (1100 cfm outgoing, 1600 cfm returned) and 300 cfm comes from leaks into the reactor room from around doors or other leaks in the reactor room enclosure.

Although 1100 cfm is withdrawn from the room by the HVAC, and is refrigerated and returned with an additional 500 cfm of air at ambient temperature, it will be assumed that during the LOCA event, this air flow continues but that the refrigeration fails because of an excessive heat load. (Note that if the HVAC fails, the reactor room exhaust fan will still be able to draw at least 500 cfm of ambient air through the open HVAC damper.) Thus, 500 cfm (from the air conditioning) plus 300 cfm of air (from in-leakage in the reactor room) are continuously supplied to the reactor room at an ambient air temperature (~80°F) to match the 800 cfm exhaust that continues during the accident. To ensure a continuous air supply to and from the reactor room, a backup power supply was provided for the reactor room exhaust fan.

13.4.5 Assumptions Made for ECCS Operation

The following assumptions are necessary to initiate and evaluate ECCS operation:

(1) The ECCS will be initiated by the reactor operator if the water level drops to a level that requires the system to be turned on. (Operator action and manual operation of the ECCS is considered sufficient since at least 20 minutes is available for initiation after an instantaneous loss of the tank water before sufficient heat will build up in the fuel to challenge the safety limit.)

(2) If the reactor room CAM actuates the recirculation mode of ventilation for the reactor room because of elevated radiation levels following tank water loss, the reactor operator will assess the situation and then switch the room ventilation from recirculation back to the manual ventilation mode.

(3) On the basis of assumption number 2 above, the reactor room exhaust fan will continue to extract 800 cfm from the reactor room (typically 500 cfm from the top of the reactor and 300 cfm from near the ceiling.

13.4.6 Performance of the ECCS

Because of the relatively small reactor room (~7500 cu-ft), it is necessary to consider for any air cooling portion of the LOCA, that the initial conditions consist of an air filled reactor tank containing a hot core near its bottom and surmounted by a small reactor room. Hot air rises (~227 cfm) from the core in a plume, part of which is removed into the 500 cfm exhaust duct at the top of the reactor tank. The remainder of the hot air plume rises into the reactor room, mixing with the room air (aided by the 1600 cfm from the inlet air duct). Near the top of the reactor room 300 cfm of mixed air is exhausted. Ambient air at 27°C (80°F) comes into the reactor room at 800 cfm.

At quasi equilibrium, the mixed air in the reactor room, including that near the top of the reactor tank, is warmer than the 27°C (80°F) ambient air from the outside. This mixed air flows in a near annulus down the reactor tank adjacent to the tank wall as the hot plume from the reactor core flows upward in the center of the tank. The downflow air partially mixes with the hot air plume rising from the core and increases in temperature. This downflow air then enters the bottom of the reactor core.

Decay heat is removed from the reactor by radial conduction to the surface of the fuel elements where it is removed by convective air currents driven by buoyant forces generated by the reactor natural convection loop. The resulting peak and average fuel temperatures were calculated for the hottest element as a function of time. The natural convection flow rate is dependent on the pressure balance in the system. The buoyancy driving head for the natural convection flow is the difference between the density head of the cooler downflow and the density head of the hot upflow. The subsequent analysis shows that a 2 foot high chimney provides adequate buoyant driving head.

13.4.7 Results of ECCS Calculations

Although it is recognized that the ECCS system, when hooked to the domestic water supply, should be able to deliver an infinite supply of water, should the domestic water supply not be available, the ECCS function will be supplied by the backup AMUWS. Since this system has a limited water supply, considerations of a finite water supply with transition to air cooling were utilized in this calculation.

Using the preceding assumptions for the reactor core and for the temperature of the cooling air available in the reactor room, the applicant used the TAC2D code to evaluate the cooling requirements to maintain fuel temperatures below safety limits. Figure 13.1 presents the peak and average fuel temperatures in the hottest fuel element during the air cooling cycle after spray cooling for 3 hours (with a chimney height of 2 ft). From Figure 13.1 it may be noted that spray cooling for 3 hours will lower the resulting average temperature in the hottest fuel element to 886°C, well below the safety limit of 930°C. In order to maintain cladding integrity, it is only necessary for the average temperature to be below the safety limit, since the colder sections of the fuel will act as a sink for any free hydrogen released from the hotter sections. Figure 13.1 also illustrates that with a 2-foot chimney and slightly more than 3.5 hours of spray cooling, the peak fuel temperature in the hottest fuel element will not exceed the safety limit of 930°C.

13.4.8 Ground Water Contamination

As a result of activation of impurities in the primary cooling water, the water will contain small amounts of radionuclides depending on reactor power, reactor operating time and time since reactor shutdown. To characterize the radioactivity expected to be present in the MNRC primary coolant at 2 MW, measured values for the predominant radionuclides were adjusted to reflect estimated equilibrium concentrations at 2 MW. Next, a calculation was made to determine the length of time for the lost coolant to reach ground water.

If it is assumed that the ground water is 80 feet below the MNRC site, the applicant has calculated that it would require more than 36 hours for it to be reached if the reactor tank containment were removed. The radionuclide concentrations present in the reactor tank water upon reaching the ground water were then calculated utilizing a 36-hour delay time. These values are presented in Table 13.3. Decay will, of course, vary depending on the radionuclide, but Ar-41 activity would fall to about 6×10^{-12} μCi/ml during the first 36 hours. Because of its low solubility in water, argon has no limiting water concentration under 10 CFR Part 20. However, this concentration level is well below the 10 CFR Part 20 air concentration limit for the unrestricted area. Since Ar-41 is only a concern from a dose standpoint when an individual is immersed in an Ar-41 cloud, and since the concentration in this situation is well below the air or cloud limit for the unrestricted area, Ar-41 is not a problem in the ground water.

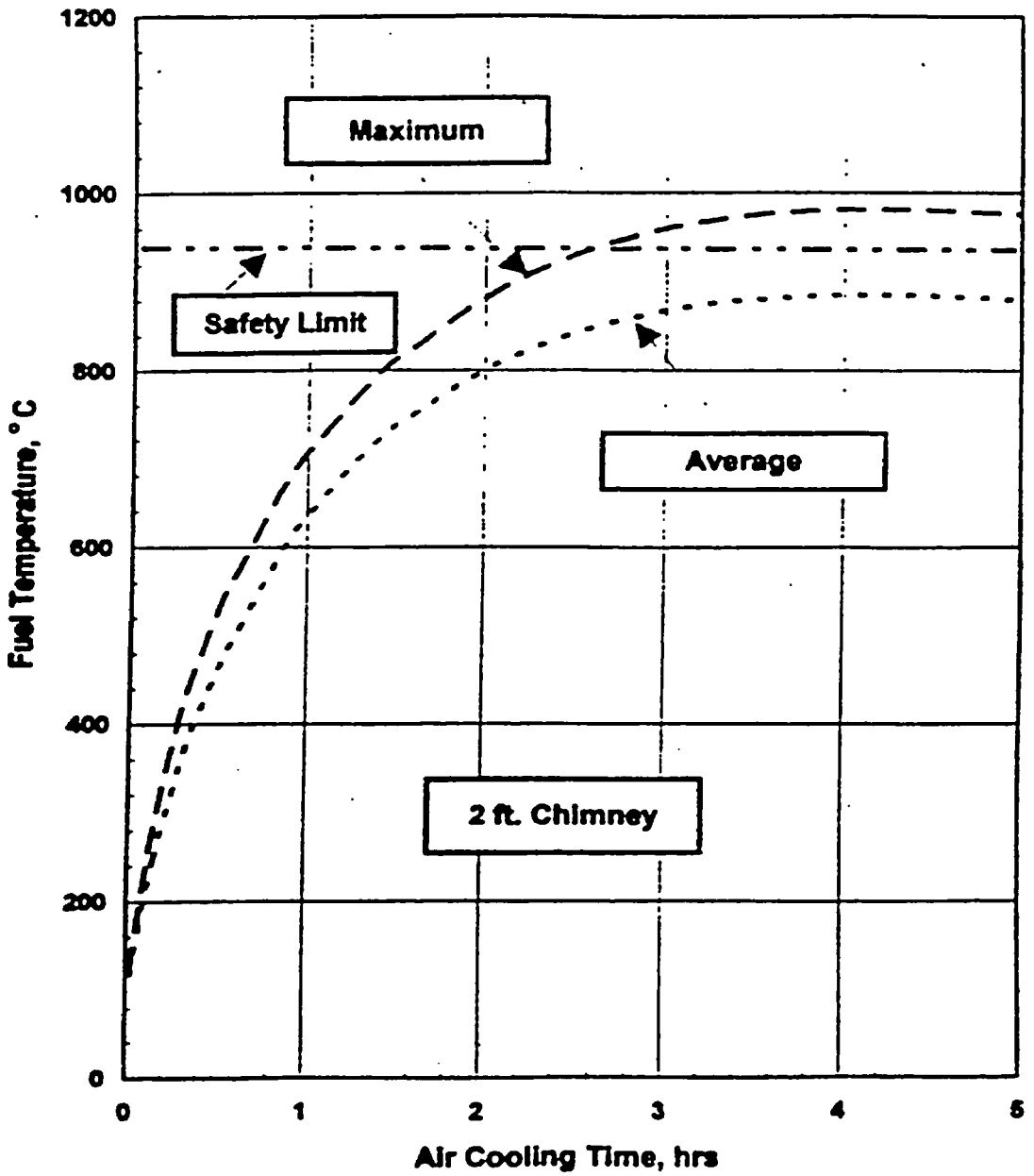

Figure 13.1

Maximum and Average Fuel Temperature During Air Cooling Cycle for Various Spray Cooling Times

The concentration of manganese-56 in the reactor primary water is approximately 4.7×10^{-4} μCi/ml. This means that at initial release the manganese-56 concentration is 6.7 times higher than the 7×10^{-5} μCi/ml unrestricted area concentration limit in 10 CFR Part 20. However, as shown in Table 13.3, the manganese-56 concentration is far below the 10 CFR Part 20 limit by the time it reaches ground water.

Table 13.3

Concentration of Radionuclides to Reach Ground Water

Radionuclide	Half Life	Equilibrium Concentration at 2 MW (μCi/ml)	Concentration Reaching Ground Water (μCi/ml)
Aluminum-28	2.3 min	6.0×10^{-3}	0
Argon-41	1.8 hr	3.0×10^{-3}	6.17×10^{-12}
Hydrogen-3	12 yr	1.0×10^{-3} to 1.3×10^{-2}	1.0×10^{-3} to 1.3×10^{-2}
Magnesium-27	9.46 min	4.0×10^{-4}	0
Manganese-56	2.58 hr	4.7×10^{-4}	4.09×10^{-10}
Nitrogen-16	7.14 sec	131	0
Sodium-24	14.96 hr	2.6×10^{-3}	5.00×10^{-4}

The estimated hydrogen-3 (tritium) level is dependent upon how long the reactor has operated since initial startup and how much non-radioactive makeup water was added before the LOCA. As shown in the SAR (Table 11-4), after 20 years of operation at 2 MW with no addition of clean makeup water, the tritium concentration may reach 1.3×10^{-2} μCi/ml. This is definitely an upper limit estimate and a concentration closer to 1.0×10^{-3} μCi/ml (the 10 CFR Part 20 concentration limit) is expected for at least the first several years. However, the tritium concentration in the water when it is released will be largely unchanged when and if the tank water reaches the ground water. Even so, the potential tritium dose to members of the general public who might consume the ground water will still be low because this accident will be a one-time event with a limited duration of release. Only a limited amount of the 7,000 gallons of water potentially

released from the reactor tank will likely escape from the radiography bays in the facility. There will obviously also be a reduction in the tritium concentration when the reactor tank water mixes with the ground water, and normally, chemical processes take place as water percolates through soil which result in partial removal of many radionuclides. While these processes are usually not as significant for tritium as they are for many other radionuclides, some small reduction in tritium concentration may occur.

At the time the reactor tank water reaches the ground water, the sodium-24 concentration will meet the 10 CFR Part 20 release limit for discharge into a sewer system, but will exceed the Part 20 effluent release concentration. However, after just 2.1 days of decay, the concentration of sodium-24 in the ground water (ignoring dilution) will be within the NRC effluent concentration limit in 10 CFR Part 20. In addition, the sodium-24 ground water concentration will continue to drop because of the continued rapid decay of this radionuclide. Therefore, sodium-24 does not represent a significant source of potential radiation exposure to the general public.

13.4.9 Radiation Levels from the Uncovered Core

Even though there is a very remote possibility that the primary coolant and reactor shielding water will be totally lost, direct and scattered radiation doses from an uncovered core following 2 MW operations were calculated in Appendix B of the SAR and are summarized here. Direct radiation doses were calculated for a person standing on the grating directly above the reactor core. The core, shut down and draining of water, was treated as a bare cylindrical uniform source of 1 MeV photons. No accounting was made of sources other than fission product decay gammas, and no credit was taken for gamma attenuation through the fuel element end pieces and the upper grid plate. The first of these assumptions is optimistic, the second conservative, and the net effect is conservative. The results are given in Table 13.4.

Table 13.4

Dose Rates on the MNRC Reactor Top After a Loss of Pool Water Accident Following 2 MW Operations

Time After Shutdown	Effective Dose Equivalent Rate (rem/hr)
10 seconds	3.64×10^4
1 hour	3.77×10^3
1 day	1.69×10^3
1 week	8.96×10^2
1 month	4.70×10^2

A second calculation was made to determine the dose rate to a person in the reactor room who is not in the direct beam from the exposed core but is still subject to a scattered radiation from the reactor room ceiling. The dose point is 3 feet above the reactor room floor at a distance of 6 feet away from the edge of the reactor tank. This is the furthest distance a person can get from the edge of the tank and still remain in the reactor room. The ceiling of the reactor room is about 24 feet from the reactor top and is assumed to be a thick concrete slab. The concrete slab assumption gives the worst case scattering, but it should be noted that the roof over the reactor is only corrugated metal and not a thick concrete slab. Therefore, in reality, the scattering will not be as great as calculated because the radiation from the unshielded core will be collimated upward by the shield structure and undergo minimal interaction with the roof, greatly reducing the actual dose rates away from the edge of the tank. The results of the calculated dose rates as a result of scatter in the reactor room are found in Table 13.5. These dose rates show that personnel could occupy areas within the reactor room shortly after the accident for a sufficient period of time without exceeding the NRC occupational dose limits.

Table 13.5

Scattered Radiation Dose Rates in the MNRC Reactor Room After a Loss of Pool Water Accident Following 2 MW Operations

Time After Shutdown	Effective Dose Equivalent Rate (rem/hr)
10 seconds	9.640
1 hour	1.000
1 day	0.449
1 week	0.238
1 month	0.124

The last calculation done by the licensee was carried out to estimate the dose rates to a person at the MNRC facility fence as a result of scattered radiation from the reactor room ceiling. The dose point is 3 feet above the ground at the facility fence. This is the closest point a member of the public would be able to occupy. The calculated dose rates are presented in Table 13.6, but however, are estimates because scatter off of the reactor room ceiling will be much less than assumed.

Table 13.6

Scattered Radiation Dose Rates at the MNRC Facility Fence After a Loss of Pool Water Accident Following 2 MW Operations

Time After Shutdown	Effective Dose Equivalent Rate (rem/hr)
10 seconds	0.460
1 hour	0.047
1 day	0.021
1 week	0.011
1 month	0.006

Using the worst-case number in Table 13.6 (0.46 rem/hr), an operator on the roof of the reactor building for 5 minutes to connect the ECCS would receive a dose of approximately 120 mrem.

13.5 Loss of Coolant Flow

Loss of coolant flow could occur because of failure of a key component in the reactor primary or secondary cooling system (e.g., a pump), loss of electrical power, or blockage of a coolant flow channel. Operator error could also cause a loss of coolant flow.

The bulk water temperature adiabatically increases at a rate of 1.1°C/min at a power level of 2 MW. Under these conditions, the operator has ample time to reduce the power and place the heat-removal system into operation or shut down the reactor before any abnormal temperature is reached in the reactor water. A core inlet temperature alarm at 35°C and primary and secondary low flow alarms will alert the operator to an abnormal condition and should allow for corrective action before reaching the bulk water temperature limit.

13.6 Mishandling or Malfunction of Fuel

Events which could cause accidents in this category at the MNRC reactor include fuel handling accidents where an element is dropped underwater and severely damaged enough to breach the cladding, or simple failure of the fuel cladding because of a manufacturing defect or corrosion. Overheating of fuel with subsequent cladding failure during steady state operations or during pulsing might occur as a result of incorrect loading of fuel elements with different U-235 weight percents in a mixed core.

At some point in the lifetime of the MNRC reactor, used fuel within the core will be moved to new positions or removed from the core. Fuel elements are moved only during periods when the reactor is shut down. The most serious fuel-handling accident involves spent or used fuel that was removed from the core and then dropped or otherwise damaged, causing a breach of the fuel element cladding and a release of fission products. As previously noted, the standard or accepted maximum hypothetical accident for TRIGA reactors involves failure of the cladding of a single fuel element after extended reactor operations, followed by instantaneous release of the fission products directly into the air of the reactor room. A less severe, but more credible accident involving a single element cladding failure assumes that the failure occurs underwater in the reactor tank 48 hours after reactor shutdown (i.e., 48 hours of decay has occurred). This

accident has been analyzed in Appendix B of the SAR and results in much lower doses to the public and the reactor staff than those estimated for the MHA (Table 13.7).

Table 13.7

Radiation Doses to Members of the General Public

Under Different Atmospheric Conditions and at Different Distances

from the MNRC Following a Cladding Failure in Water 48 Hours after Reactor Shutdown

Distance (Meters)	CDE Thyroid (mrem)	CEDE (mrem)	DDE * (mrem)	TEDE (mrem)
10	97	4.7	0.0	4.7
20	76	3.7	0.0	3.7
40	52	2.5	0.0	2.5
80	30	1.4	0.0	1.4
100	24	1.1	0.0	1.1

CDE - Committed Dose Equivalent

CEDE - Committed Effective Dose Equivalent

DDE - Deep Dose Equivalent

TEDE - Total Effective Dose Equivalent

* Doses less than 0.1 mrem entered as zero.

13.6.1 Fuel Loading Error

Operation of the MNRC reactor after a [redacted] fuel element has been loaded into the wrong grid position could result in increased temperatures in surrounding fuel elements. Neutronics calculations were done to identify the worst-case error for use in analyzing this type of accident. It was assumed that no fuel elements can be loaded in Rows A or B of the MNRC reactor because of the cutout in the upper grid plate. The highest power peaking would result from a fresh [redacted] fuel element being substituted for a graphite dummy element at a Row C flat (even numbered) position. Because of the surrounding [redacted] fuel environment, higher element power would be generated if this substitution were made in the mixed-fuel reference core than in the all-[redacted] reference core. The worst case is fresh [redacted] fuel replacing the dummy

element in position C10 of the MixJ Core loading. The loading error would increase the excess reactivity by $1.51 (18 percent) and would increase the peak element power by 11.5 KW (42 percent) to 39.1 KW. Accordingly, the loading error is assumed to result in a peak element power of 40 KW.

The RELAP5 steady-state thermal-hydraulic analysis was repeated with the nominal inlet temperature (32.2°C) and the peak element power increased to 40 KW (core radial peaking factor increased to 2.0). The peak fuel temperature was 734°C, which is still below the LCO of 750°C. The critical heat flux ratio was 2.6, indicating that there is still ample margin before film boiling. Since the hot channel outlet void fraction was 5 percent and the core outlet subcooling was 8°C, it appears unlikely that any detectable chugging will occur. Should chugging occur, it will be easily detected and appropriate operational constraints established.

Operation in pulse mode with the maximum allowed reactivity insertion, $1.75, and the above loading error was also considered. The core-average fuel ΔT with this insertion is 161°C. The four loading factors used to produce the total peaking factor were:

- core radial peaking factor of 2.0, on the basis of a peak element power of 40 KW
- axial and pin tilt factors of 1.27 and 1.5, respectively, from the worst MixJ Core in Section 4.3.3.7 of the SAR
- 1.33 pin radial peaking factor, since the erroneously loaded fuel is the 20/20 type

This leads to a peak fuel temperature of 837°C, well below the 1100°C pulsing limit. Thus, pulse operation is also predicted to be benign.

13.7 Experiment Malfunction (Accident Initiating Events and Scenarios)

Improperly controlled experiments involving the MNRC reactor could potentially result in damage to the reactor, unnecessary radiation exposure to facility staff and members of the general public, and unnecessary releases of radioactivity into the unrestricted area. Mechanisms for these occurrences include the production of excess amounts of radionuclides

with unexpected radiation levels, and creation of unplanned for pressures in irradiated materials which subsequently vent into reactor irradiation facilities or into the reactor building causing damage from the pressure release or an uncontrolled release of radioactivity. Other mechanisms for damage, such as corrosion and large reactivity changes, are also possible.

Because of the potential for accidents, which could damage the reactor if experiments are not properly controlled, there are strict procedural and TS requirements addressing experiment review and approval. These requirements are focused on ensuring that experiments will not fail, but they also incorporate requirements to assure that there is no reactor damage and no radioactivity releases or radiation doses which exceed the limits of 10 CFR Part 20, should failure occur. Safety reviews of proposed experiments usually require the performance of specific safety analyses of proposed activities such as the generation of radionuclides and fission products (i.e., radioiodines), and to ensure evaluation of reactivity worth, chemical and physical characteristics of materials under irradiation, corrosive and explosive characteristics of materials, and the need for encapsulation. This process is an important step in ensuring the safety of reactor experiments and was successfully used for many years at research reactors to help assure the safety of experiments placed in these reactors. Therefore, the process is expected to be an effective measure in assuring experiment safety at the MNRC reactor.

A specific TS limitation of less than $1.00 on the reactivity of individual moveable experiments placed in the reactor tank was established and is safe because analysis has shown that pulse reactivity insertions of $1.75 in the 2 MW MNRC reactor result in fuel temperatures which are well below the fuel temperature safety limit of 930°C. In addition, limiting the worth of each moveable experiment to less than $1.00 assures that the additional increase in transient power and temperature is slow enough so that the fuel temperature scram is effective.

Limiting the generation of certain fission products in fueled experiments also helps to assure that occupational radiation doses as well as doses to the general public, because of postulated experiment failure with subsequent fission product release, will be within the limits prescribed by 10 CFR Part 20. A limit of 1.5 curies of iodine-131 through 135 for a single fueled experiment is extremely small compared to the approximately 8500 curies of iodine-131 through 135 which are present in the single fuel element failure analyzed in Section 13.3 (failure in air) and Section

13.6 (failure in water) of the SAR. In both cases, the occupational doses and the doses to the general public in the unrestricted area as a result of radioiodine are within 10 CFR Part 20 limits. Therefore, limiting experiments to 1.5 curies of radioiodine will result in a projected dose well within 10 CFR Part 20 limits. Strontium-90 in a fueled experiment is limited to 0.005 curies, which is far below the 34 curies present in the single fuel element failures mentioned above. Since no dose limits will be exceeded in the single element failure accidents, doses from experiments where the strontium-90 is limited to 0.005 curies are expected to be safely within 10 CFR Part 20 limits.

Projected damage to the reactor from experiments involving explosives varies significantly depending on the quantity of explosives being irradiated and where the explosives are placed relative to critical reactor components and safety systems. For example, an explosives limit of 25 mg when irradiation is to be in the reactor tank, carries the additional restriction that experiment containment must be able to withstand the pressure produced upon detonation.

13.8 External Events

As discussed in Chapter 2 of this SER, hurricanes, tornadoes, and floods are virtually nonexistent in the area around the MNRC reactor. Therefore, these events are not considered viable causes of accidents for the reactor facility. In addition, seismic activity in Sacramento is low relative to other areas of California.

The MNRC facility is surrounded by a security fence and a physical security plan is continuously in force for personnel and activities inside the fence. The reactor site is located on a U.S. AFB where base access and overall security is far stricter than the civilian business and residential areas surrounding the base. Therefore, accidents caused by human controlled events which would damage the reactor, such as explosions or other unusual actions, have very low probability.

Since the MNRC reactor is located at the edge of the runway at McClellan AFB, airplane crashes involving the reactor may potentially cause reactor damage. A study of the probability of aircraft crashes which could cause reactor damage at the MNRC was conducted by GA Technologies as a part of the original Stationary Neutron Radiography System Proposal. The conclusions show that the calculated reactor damage probability as a result of aircraft accidents

is 5×10^{-8} per reactor year. This value was obtained using conservative assumptions and the "best estimate" value is expected to be considerably lower than $5 \times 10.^{-8}$ Safety analyses of nuclear power reactors have generally concluded that a reactor damage probability because of an aircraft accident, which is less than 1×10^{-7} per year, does not represent a significant contribution to the overall reactor risk. Therefore, it is concluded that no specific aircraft accident and no radiological consequences need to be considered for the MNRC reactor. The staff has reviewed the analysis provided in the McClellan SAR and is in agreement with the applicant's conclusions, except for those flights which would be associated with "general aviation" flights. (The staff created its independent calculations on the basis of Ref. 2) The applicant has agreed to provide further analysis in the event that general aviation flights are routinely permitted to use the runways at McClellan AFB.

13.9 Mishandling or Malfunction of Equipment

No credible accident initiating events were identified for this accident class. Situations involving an operator error at the reactor controls, a malfunction or loss of safety-related instruments or controls and an electrical fault in the control rod system were anticipated at the reactor design stage. As a result, many safety features, such as control system interlocks and automatic reactor shutdown circuits, were designed into the overall TRIGA control system.

Malfunction of confinement or containment systems would have the greatest impact during the maximum hypothetical accident if they were used to lessen the impact of such an accident. However, as shown in the SAR, Section 13.2.1.1 and SAR, Appendix B, no credit is taken for confinement or containment systems in the analysis of the MHA for the MNRC reactor. Furthermore, no safety considerations at the MNRC depend on confinement or containment systems, although simple confinement devices such as a fume hood might be used as part of normal operations.

Rapid leaks of liquids were previously addressed in the SAR, Section 13.2.3. Although no damage to the reactor occurs as a result of these leaks, the details of the analyses provide a more comprehensive explanation.

13.10 Conclusions

The staff concludes that the applicant has postulated and analyzed sufficient accident-initiating events and scenarios to demonstrate that the reactor design, management, operating limits, and procedures are planned in a manner that radiation exposure to the MNRC staff and the public will not exceed the NRC limits in 10 CFR 20, and will avoid inadvertent reactor damage that could prevent safe shutdown.

- Under the least favorable atmospheric conditions, the maximum hypothetical accident of the failure of a fuel element cladding in air will not result in occupational radiation exposure of the MNRC staff or radiation exposure of the general public in excess of applicable NRC limits in 10 CFR Part 20.

- For accidents involving insertions of excess reactivity, loss of coolant, loss of coolant flow, mishandling or malfunction of fuel, experiment malfunction, and mishandling or malfunction of equipment, the applicant has demonstrated that there is no projected significant damage to the reactor, except the damage or malfunction assumed as part of the different accident scenarios analyzed.

- The applicant has analyzed accidents associated with external events, notably those involving aircraft crashes. Although the present analysis shows that there is not a significant risk associated with present usage of runways, the possibility of general aviation flights in the future may change their conclusions. The risk analysis will be revisited should general aviation flights be permitted to use the runways.

14 TECHNICAL SPECIFICATIONS

14.1 Summary

In the course of this licensing action, the staff has reviewed and evaluated the TSs submitted by the applicant. These TSs define certain features, characteristics, and conditions governing the operation of the MNRC facility and will be explicitly included in the license as Appendix A. In addition, the staff reviewed the format and content of the TS using guidance from ANSI/ANS 15.1-1990, "The Development of Technical Specifications for Research Reactors," and the guidance in applicable sections of NUREG 1537, "Guidelines for Preparing and Reviewing Applications for the Licensing of Non-Power Reactors," dated 1996.

14.2 Conclusion

On the basis of its review, the staff finds the MNRC TS acceptable and hence concludes that normal plant operation within the limits of the TS will not result in offsite radiation exposures in excess of the limits specified in 10 CFR Part 20. Furthermore, the limiting conditions for operation and surveillance requirements will limit the likelihood of malfunctions and mitigate the consequences to the public in regard to accidents, incidents, and occurrences.

15 FINANCIAL QUALIFICATIONS

The staff reviewed the financial status of the applicant and concludes that the necessary funds will be made available to support continued operations and, when necessary, to shut down the facility and carry out decommissioning activities. Operating costs will be paid from an annual allocation of funds governed by the Secretary of the Air Force and funds for decommissioning will be provided by the Air Force Materiel Command. In accordance with 10 CFR 50.75e(2)(iv), since the United States Air Force, as part of the Federal Government, is the source of funds and since both operating and decommissioning costs are at levels that should not present funding problems, no additional analysis or verification of the adequacy of funding is required.

16 PRIOR UTILIZATION

The MNRC reactor has been in operation since January 20, 1990, and operating safely at 2 MW since April 1997. During that time, the reactor was used primarily by the U.S. Air Force to perform non-destructive analysis of aircraft parts. In addition, some experimental irradiations were conducted and some operational variations were completed to verify some of the calculational values used in the reactor design. There were no incidents of radioactive material releases or occupational exposures above the limits of 10 CFR Part 20.

The staff concludes that the reactor was initially designed and constructed to operate safely. During the license application review, the staff considered whether prior operation would cause significant degradation in the capability of components and systems to continue to perform their safety functions. Because fuel cladding is the component most responsible for preventing release of fission products to the environment, the staff considered mechanisms that could possibly lead to detrimental changes in cladding integrity. The mechanisms include radiation degradation of cladding integrity, high fuel temperature and temperature cycling effects on the mechanical properties of the cladding, corrosion, damage from handling or experimental use, and degradation of safety components or systems.

The MNRC TRIGA reactor is typical of a large number of TRIGA reactors operating both in the United States and overseas. For the MNRC TRIGA reactor, the factors which could result in changes to cladding integrity, such as power density and maximum fuel temperatures, coolant flow rates and temperatures, conductivity and pH of primary coolant, are comparable to those of other operating TRIGA reactors. In addition, the MNRC staff performs regular surveillances and preventive maintenance. The staff concludes that there has been no significant degradation of equipment and that facility management will continue to maintain and operate the reactor so that there is no significant increase in the radiological risk to facility staff or the public.

17 CONCLUSIONS

On the basis of its evaluation of the application as set forth in the previous chapters of this SER, the staff has reached the following conclusions:

- The application filed by the McClellan AFB for issuance of an operating license for a TRIGA research reactor complies with the requirements of the Atomic Energy Act of 1954, as amended (the Act), as well as the Commission's regulations set forth in 10 CFR Chapter I.

- The facility will operate in conformance with the application (as amended), as well as the provisions of the Act and the rules and regulations of the Commission.

- The applicant has provided reasonable assurance that (a) the activities authorized by the operating license can be conducted without endangering the health and safety of the public and (b) such activities will be conducted in compliance with the Commission's regulations as set forth in 10 CFR Chapter I.

- The applicant is technically and financially qualified to engage in the activities authorized by the license in accordance with the Commission's regulations as set forth in 10 CFR Chapter I.

- The issuance of this license will not be inimical to the common defense and security or to the health and safety of the public.

18 REFERENCES

1. McClellan Air Force Base, McClellan Nuclear Radiation Center, Safety Analysis Report, July 1997.

2. U.S. Department of Energy, "Accident Analysis for Aircraft Crash into Hazardous Facilities," DOE-STD-3014-96, October 1996.

3. Ross T. Jansen, Argonne National Laboratory–West, letter to Dr. Wade Richards, McClellan Nuclear Radiation Center, August 22, 1997.

4. General Atomics, "Emergency Core Cooling System Requirements for the McClellan Nuclear Radiation Center 2 MW TRIGA® Reactor," GEN-52, January 1997.

5. GA Technologies, Inc., Microprocessor Based Research Reactor Instrumentation and Control System, INS-24, May 1986.

6. U.S. Nuclear Regulatory Commission, "Safety Evaluation Report related to the construction permit and operating license for the research reactor at The University of Texas," NUREG-1135, Supplement 1, Section 7.4, May 1985.

7. U.S. Nuclear Regulatory Commission, NUREG-1137, Part 1; Appendix to Chapter 7,.

8. U.S. Nuclear Regulatory Commission, "Credible Accident Analysis for TRIGA and TRIGA-Fueled Reactors," NUREG/CR-2387, April 1982.

9. U.S. Nuclear Regulatory Commission, "Guidelines for Preparing and Reviewing Applications for the Licensing of Non-Power Reactors," NUREG-1537, February 1996.

10. U.S. Nuclear Regulatory Commission, "High-Uranium Content, Low-Enriched Uranium Zirconium Hydride Fuels for TRIGA Reactors," NUREG-1282, Docket No. 50-163, August 1987.

11. C.K. Lee et al, "Flow-Induced Vibration Phenomenom in a Mark III TRIGA Reactor," Fourth European Conference of TRIGA Users, Vienna, Austria 1976.

NRC FORM 335
(2-89)
NRCM 1102,
3201, 3202

U.S. NUCLEAR REGULATORY COMMISSION

BIBLIOGRAPHIC DATA SHEET

(See instructions on the reverse)

1. REPORT NUMBER
(Assigned by NRC, Add Vol., Supp., Rev., and Addendum Numbers, if any.)

NUREG-1630

2. TITLE AND SUBTITLE

Safety Evaluation Report Related to the Issuance of a Facility Operating License for the Research Reactor at McClellan Air Force Base (Docket 50-607)

3. DATE REPORT PUBLISHED

MONTH	YEAR
August	1998

4. FIN OR GRANT NUMBER

5. AUTHOR(S)

6. TYPE OF REPORT

7. PERIOD COVERED *(Inclusive Dates)*

8. PERFORMING ORGANIZATION - NAME AND ADDRESS *(If NRC, provide Division, Office or Region, U.S. Nuclear Regulatory Commission, and mailing address; if contractor, provide name and mailing address.)*

Division of Reactor Program Management
Office of Nuclear Reactor Regulation
U.S. Nuclear Regulatory Commission
Washington, DC 20555-0001

9. SPONSORING ORGANIZATION - NAME AND ADDRESS *(If NRC, type "Same as above"; if contractor, provide NRC Division, Office or Region, U.S. Nuclear Regulatory Commission, and mailing address.)*

Same as above

10. SUPPLEMENTARY NOTES

11. ABSTRACT *(200 words or less)*

This Safety Evaluation Report (SER) summarizes the findings of a safety review conducted by the staff of the U.S. Nuclear Regulatory Commission (NRC), Office of Nuclear Reactor Regulation. The staff conducted this review in response to an application filed by the U.S. Air Force, McClellan Air Force Base (the applicant) for a Facility Operating License to operate the McClellan TRIGA research reactor. The facility is on the McClellan Air Force Base near Sacramento, California. In its safety review, the staff considered information submitted by the applicant, and first-hand on-site observations by the NRC personnel. On the basis of this review, the staff concludes that the McClellan TRIGA reactor can operate in accordance with its application and technical specifications without endangering the health and safety of the public and facility staff.

12. KEY WORDS/DESCRIPTORS *(List words or phrases that will assist researchers in locating the report.)*

Safety Evaluation Report (SER)
Research Reactor
McClellan Air Force Base

13. AVAILABILITY STATEMENT

unlimited

14. SECURITY CLASSIFICATION

(This Page)
unclassified

(This Report)
unclassified

15. NUMBER OF PAGES

16. PRICE

This form was electronically produced by Elite Federal Forms, Inc.