Normal Sump Samples

CTMT Normal Sump

1st Sample (" " " 1643 4/18 - 0336 4/19 = 10 hr 53 min)
2nd Sample (Sump fill from 0343 4/19 - 2020 4/19/01 = 16 hr 47 min)
3rd Sample (" " " 2040 4/19 - 1039 4/20 = 13 hr 59 min)

	2nd	3rd	RCS
Na 24	4.7 E-7	5.3-7	
Co 58	6.2 E-6	4.7-6	
Co 60	3.1 E-6	1.3 E-6	
I 131	5.4 E-5	5.9-5	5.5-3
I 133	1.5 E-5	1.7-5	1.7-2
I 135	1.3 E-6	2.9-6	2.1-2
Xe 133	2.3 -5	1.7-5	
Cs 134	3.8 E-5	4.47-5	
Cs 137	7 E-5	8.17-5	
Cs 134/137	0.54	0.55	~1.0
I-131/I 133	3.6	3.5	0.33
I 131 / I 135	41.5	20.3	0.27
B	34.0	37.5	
Boron	546	329	956
[illegible]	ND	ND	
pH	6.41	6.51	
Li	0.26	0.32	2.22
B/Li	2100	1028	434

****
19-APR-2001 21:58:26.56
CAS
DAVIS-BESSE STATION
****

SAMPLE TITLE : CHEM - CTMT NORMAL SUMP SAMPLE
SAMPLE ID : 200104191006 * SAMPLE TIME : 19-APR-2001 20:26
SAMPLE GEOMETRY : 500MLBOT * SHELF HEIGHT : ABS
SAMPLE TYPE : CHEMISTRY * SAMPLE QUANTITY : 5.00000E+02 ML
****

ACQ DATE & TIME : 19-APR-2001 20:46 * DEADTIME (%) : 0.1%
PRESET LIVE TIME : 0 00:33:20 * DETECTOR : DETECTOR 2
ELAPSED REAL TIME : 2001.6 Secs * DECAY TIME : 0 00:20:07.88
ELAPSED LIVE TIME : 2000.0 Secs * LIBRARY : 105
QC CHECK DATE/TIME: 19-APR-2001 02:29
****

COLLECTED BY : WHITNEY
COUNTED BY : DBS
REVIEWED BY : R. Edwards DATE : 4/20/01
COMMENTS :

****

Summary of Nuclide Activity

Total number of lines in spectrum 24
Number of unidentified lines 0
Number of lines tentatively identified by NID 24 100.00%

Nuclide Type : ACTIVATION

Nuclide	Hlife	Decay	Wtd Mean Uncorrected uCi/ML	Wtd Mean Decay Corr uCi/ML	Decay Corr 2-Sigma Error	2-Sigma %Error	Flags
NA-24	15.00H	1.03	4.569E-07	4.700E-07	2.296E-07	48.86	
CO-58	70.80D	1.00	6.181E-06	6.182E-06	0.662E-06	10.71	
CO-60	5.27Y	1.00	3.068E-06	3.068E-06	0.452E-06	14.74	
Total Activity :			9.706E-06	9.721E-06			

Nuclide Type : IODINE

Nuclide	Hlife	Decay	Wtd Mean Uncorrected uCi/ML	Wtd Mean Decay Corr uCi/ML	Decay Corr 2-Sigma Error	2-Sigma %Error	Flags
I-131	8.04D	1.00	5.362E-05	5.374E-05	0.170E-05	3.17	
I-133	20.80H	1.02	1.470E-05	1.500E-05	0.124E-05	8.23	
I-135	6.61H	1.07	1.200E-06	1.279E-06	1.416E-06	110.68	
Total Activity :			6.952E-05	7.002E-05			

Nuclide Type : FISSION GAS

Nuclide	Hlife	Decay	Wtd Mean Uncorrected uCi/ML	Wtd Mean Decay Corr uCi/ML	Decay Corr 2-Sigma Error	2-Sigma %Error	Flags
XE-133	5.25D	1.00	2.262E-05	2.270E-05	0.284E-05	12.51	
Total Activity :			2.262E-05	2.270E-05			

Summary of Nuclide Activity (continued)
Sample ID : 200104191006

Acquisition date : 19-APR-2001 20:46:07

.ide Type : FISSION

Nuclide	Hlife	Decay	Wtd Mean Uncorrected uCi/ML	Wtd Mean Decay Corr uCi/ML	Decay Corr 2-Sigma Error	2-Sigma %Error	Flags
CS-134	2.06Y	1.00	3.777E-05	3.777E-05	0.143E-05	3.77	
CS-137	30.17Y	1.00	6.993E-05	6.993E-05	0.191E-05	2.73	
		Total Activity :	1.077E-04	1.077E-04			
		Grand Total Activity :	2.096E-04	2.101E-04			

Flags: "K" = Keyline not found
"E" = Manually edited
"M" = Manually accepted
"A" = Nuclide specific abn. limit

Cond. 34.0 µS/cm
Boron 546 ppm
N_2H_4 ND
pH 6.41
Li 0.26 ppm

Unidentified Energy Lines
Sample ID : 200104191006

Acquisition date : 19-APR-2001 20:46:07

	Energy	Area	Bkgnd	FWHM	Channel	Left	Pw	Cts/Sec	%Err	%Eff	Flags
1	1365.77	9	4	1.82	3642.54	3633	24	4.29E-03	****	1.81E-01	T
1	1369.52	10	0	2.22	3652.54	3633	24	4.89E-03	****	1.80E-01	T

Flags: "T" = Tentatively associated

****
20-APR-2001 11:18:34.02
CAS
DAVIS-BESSE STATION
****

SAMPLE TITLE : CHEM - CTMT NORMAL SUMP SAMPLE
SAMPLE ID : 200104201008 * SAMPLE TIME : 20-APR-2001 10:25
SAMPLE GEOMETRY : 500MLBOT * SHELF HEIGHT : ABS
SAMPLE TYPE : CHEMISTRY * SAMPLE QUANTITY : 5.00000E+02 ML
****

ACQ DATE & TIME : 20-APR-2001 10:44 * DEADTIME (%) : 0.1%
PRESET LIVE TIME : 0 00:33:20 * DETECTOR : DETECTOR 2
ELAPSED REAL TIME : 2001.8 Secs * DECAY TIME : 0 00:19:54.95
ELAPSED LIVE TIME : 2000.0 Secs * LIBRARY : 105
QC CHECK DATE/TIME: 20-APR-2001 03:48
****

COLLECTED BY : DAWSON/WHITNEY
COUNTED BY : DBS
REVIEWED BY : R. Edwards DATE : 4/20/01
COMMENTS :

****

Unidentified Energy Lines

It	Energy	Area	Bkgnd	FWHM	Channel	Left	Pw	Cts/Sec	%Err	%Eff	Flags
	511.59	405	796	3.50	1364.51	1354	24	2.03E-01	38.6	3.74E-01	
1	1039.86	40	48	1.09	2773.43	2762	18	1.99E-02	88.0	2.20E-01	T
4	1261.98	18	3	1.46	3365.84	3352	18	8.91E-03	79.4	1.91E-01	
1	1400.65	30	0	1.38	3735.71	3725	17	1.52E-02	42.2	1.78E-01	T

Flags: "T" = Tentatively associated

Cond. 37.5 µS/cm
Boron 329 ppm
N_2H_4 ND
pH 6.51
Li 0.32 ppm

Sample ID : 200104201008 Acquisition date : 20-APR-2001 10:44:54

Total number of lines in spectrum 28
Number of unidentified lines 2
Number of lines tentatively identified by NID 26 92.86%

Nuclide Type : ACTIVATION

Nuclide	Hlife	Decay	Wtd Mean Uncorrected uCi/ML	Wtd Mean Decay Corr uCi/ML	Decay Corr 2-Sigma Error	2-Sigma %Error	Flags
NA-24	15.00H	1.03	5.139E-07	5.286E-07	3.122E-07	59.06	
CO-58	70.80D	1.00	4.673E-06	4.675E-06	0.509E-06	10.88	
CO-60	5.27Y	1.00	1.291E-06	1.291E-06	0.343E-06	26.60	
ZR-95	64.02D	1.00	3.057E-06	3.057E-06	1.004E-06	32.85	
			---	---			
Total Activity :			9.535E-06	9.552E-06			

Nuclide Type : IODINE

Nuclide	Hlife	Decay	Wtd Mean Uncorrected uCi/ML	Wtd Mean Decay Corr uCi/ML	Decay Corr 2-Sigma Error	2-Sigma %Error	Flags
I-131	8.04D	1.00	5.945E-05	5.958E-05	0.168E-05	2.82	
I-133	20.80H	1.02	1.667E-05	1.701E-05	0.120E-05	7.03	
I-135	6.61H	1.07	2.769E-06	2.952E-06	1.020E-06	34.55	
			---	---			
Total Activity :			7.889E-05	7.955E-05			

Nuclide Type : FISSION GAS

Nuclide	Hlife	Decay	Wtd Mean Uncorrected uCi/ML	Wtd Mean Decay Corr uCi/ML	Decay Corr 2-Sigma Error	2-Sigma %Error	Flags
XE-133	5.25D	1.00	1.675E-05	1.681E-05	0.292E-05	17.38	
XE-135	9.11H	1.05	1.005E-06	1.053E-06	0.604E-06	57.36	
			---	---			
Total Activity :			1.776E-05	1.786E-05			

Nuclide Type : FISSION

Nuclide	Hlife	Decay	Wtd Mean Uncorrected uCi/ML	Wtd Mean Decay Corr uCi/ML	Decay Corr 2-Sigma Error	2-Sigma %Error	Flags
CS-134	2.06Y	1.00	4.472E-05	4.472E-05	0.166E-05	3.71	
CS-137	30.17Y	1.00	8.171E-05	8.171E-05	0.196E-05	2.40	
			---	---			
Total Activity :			1.264E-04	1.264E-04			

Grand Total Activity : 2.326E-04 2.334E-04

Flags: "K" = Keyline not found "M" = Manually accepted
"E" = Manually edited "A" = Nuclide specific abn. limit

****
28-DEC-2000 12:20:46.42
CAS
DAVIS-BESSE STATION
****

AMPLE TITLE : CHEM - CTMT NORMAL SUMP
AMPLE ID : 200012281006 * SAMPLE TIME : 28-DEC-2000 11:00
AMPLE GEOMETRY : 500MLBOT * SHELF HEIGHT : ABS
AMPLE TYPE : CHEMISTRY * SAMPLE QUANTITY : 5.00000E+02 ML
****

CQ DATE & TIME : 28-DEC-2000 11:47 * DEADTIME (%) : 0.2%
RESET LIVE TIME : 0 00:33:20 * DETECTOR : DETECTOR 1
LAPSED REAL TIME : 2003.2 Secs * DECAY TIME : 0 00:47:07.06
LAPSED LIVE TIME : 2000.0 Secs * LIBRARY : 105
C CHECK DATE/TIME: 28-DEC-2000 01:30
****

OLLECTED BY : KEBKER
OUNTED BY : DBS
EVIEWED BY : _____
OMMENTS :

****

nidentified Energy Lines

t	Energy	Area	Bkgnd	FWHM	Channel	Left	Pw	Cts/Sec	%Err	%Eff	Flags
	827.86	21	26	0.82	2207.05	2203	9	1.05E-02	****	2.36E-01	T
3	1390.71	64	4	1.80	3732.00	3725	15	3.22E-02	30.2	1.55E-01	
3	1401.11	42	1	1.58	3735.74	3725	15	2.08E-02	42.7	1.54E-01	T

lags: "T" = Tentatively associated

γ spec - on back

Cond - 20.6 umhos/cm²
pH - 5.90 @ 25°
B - 786 ppm 1298
N_2H_4 - <5 ppb
Li^+ - 0.31 ppm 2.2

MO 12
Outside Temp.

Uniol. 0.13

T010 - 13B bonnet

T011 A bonnet

T770
T771. } outlet

T703 - QT temp

L 705 - QT LVL. Low.

704 - QT Lvl High

P710 - QT Press

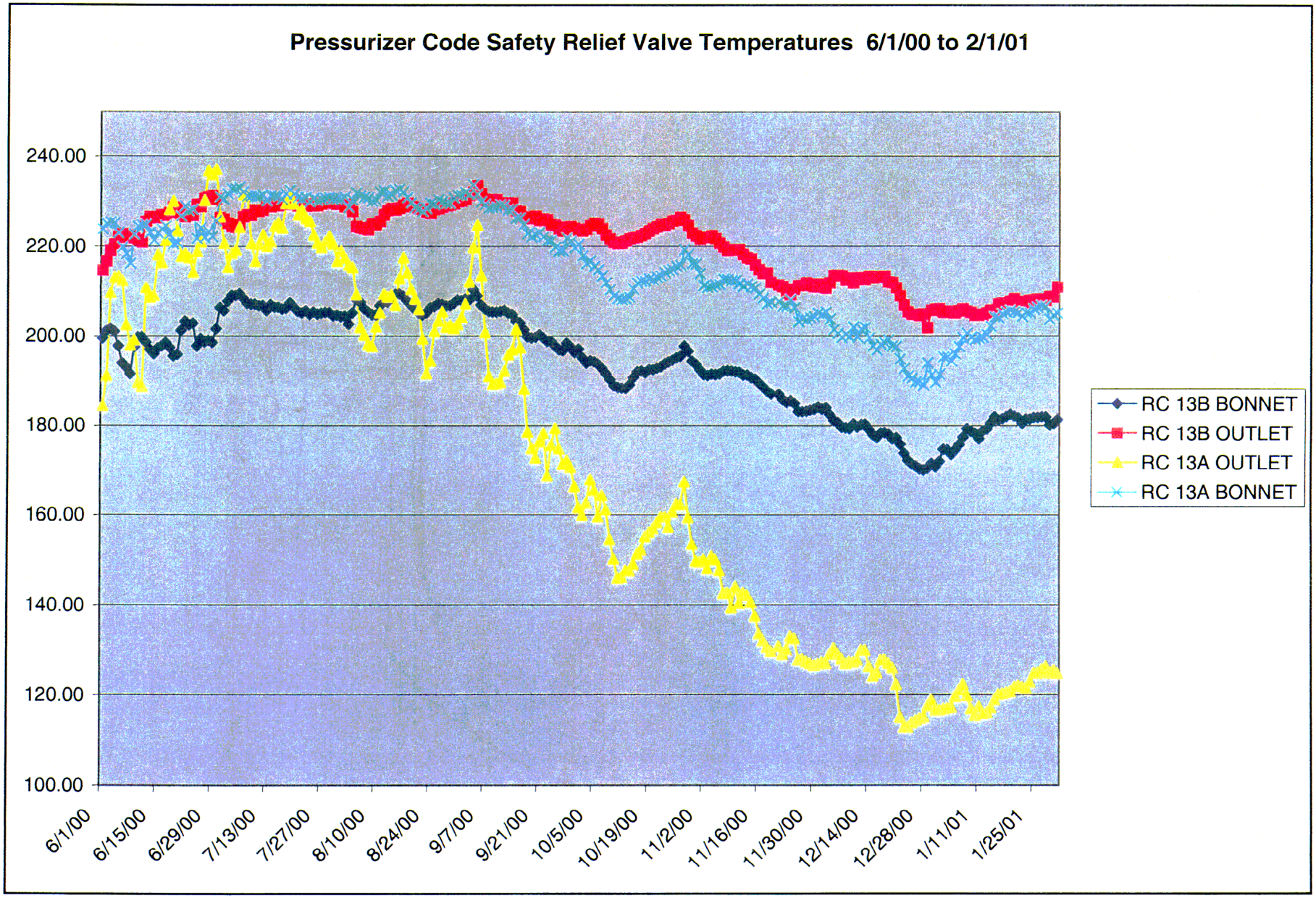
Pressurizer Code Safety Relief Valve Temperatures 6/1/00 to 2/1/01
240.00
220.00
200.00
180.00
160.00
140.00
120.00
100.00
6/1/00
6/15/00
6/29/00
7/13/00
7/27/00
8/10/00
8/24/00
9/7/00
9/21/00
10/5/00
10/19/00
11/2/00
11/16/00
11/30/00
12/14/00
12/28/00
1/11/01
1/25/01
RC 13B BONNET
RC 13B OUTLET
RC 13A OUTLET
RC 13A BONNET

Andrew J. Siemaszko
03/10/2001 01:14 PM

To: John B. Cunnings/TE/FirstEnergy,
cc: David L. Eshelman/TE/FirstEnergy, Glenn R. McIntyre/TE/FirstEnergy,
Subject: RCS unidentified leak rate.

John.

During our Saturday leak hunt we stumbled on two leaking valves in the Room 211 area. Large piles of boron were found on the floor with the evidence of drainage to the floor drain. I am cautious not to get excited that we could have found a contributor to our unidentified leakage. The valves are:
MU-173 Deficiency Tag A- 1434
MU-433 DT A-1435
In addition MU-40 (non-consequencial to RCS leakage) DT A-1433.

Art Lewis wrote CR's for leaking diaphragms.

Because we have SS24 bonnet leak (since yesterday) our weekend leak rate may be high. But it will get smaller soon - trust me.

Andrew

MU-173 MU-433

A-1433	MU-40
A-1434	MU-173
A-1435	MU-433

Jeff Babbotid

Tom Perdue

Narrative Logs Report Module

File Edit Reports Options Window Help

Log Entries Search Report

Log Entries Report

Entry Date/Time	Entry Type	Entry Text
02/10/2001 09:21	ARTS - Bypass	Added 13 gallons of acid from BAAT 2. Verified RCS Flow >2800 GPM for SR 4.1.1.2 by verifying at least one RCP in operation. Added 185 gallons of water from CVMT 1 to the Makeup Tank. [Bechtel, Robert - Primary Rx Operator - Unit Log - Day Shift]
02/10/2001 23:31	ARTS - Bypass	Verified RCS Flow >2800 GPM for SR 4.1.1.2 by verifying at least one RCP in operation. Added 186 gallons of water from CVMT #1 to the Makeup Tank. [Pocino, Carlo - Primary Rx Operator - Unit Log - Night Shift]
02/12/2001 21:02	ARTS - Bypass	Verified RCS Flow >2800 GPM for SR 4.1.1.2 by verifying at least one RCP in operation. Added 131 gallons of water from CVMT1 to the Makeup Tank. [Boissoneault, Polly - MISC - Unit Log - Night Shift]
02/13/2001 04:15	ARTS - Bypass	Verified RCS Flow >2800 GPM for SR 4.1.1.2 by verifying at least one RCP in operation. Added 120 gallons of water from CVMT 1 to the Makeup Tank. [Boissoneault, Polly - MISC - Unit Log - Night Shift]
02/14/2001 03:15	ARTS - Bypass	Added 10 gallons of acid from BAAT 2 . Verified RCS Flow >2800 GPM for SR 4.1.1.2 by verifying at least one RCP in operation. Added 240 gallons of water from CVMT 1 to the Makeup Tank. [Walter, Gregory - Primary Rx Operator - Unit Log - Night Shift]
02/14/2001 11:38	ARTS - Bypass	Verified RCS Flow >2800 GPM for SR 4.1.1.2 by verifying at least one RCP in operation. Added 100 gallons of water from CVMT 1 to the Makeup Tank. [Isbell, Lawrence - Primary Rx Operator - Unit Log - Day Shift]
02/15/2001 01:35	ARTS - Bypass	Added 10 gallons of acid from BAAT 1 . Verified RCS Flow >2800 GPM for SR 4.1.1.2 by verifying at least one RCP in operation. Added 140 gallons of water from CVMT 1 to the Makeup Tank. [Baker, John - Primary Rx Operator - Unit Log - Night Shift]
02/15/2001 20:11	ARTS - Bypass	Verified RCS Flow >2800 GPM for SR 4.1.1.2 by verifying at least one RCP in operation. Added 152 gallons of water from CVMT 2 to the Makeup Tank. [Boss, Kevin - Primary Rx Operator - Unit Log - Night Shift]
02/16/2001 05:32	ARTS - Bypass	Verified RCS Flow >2800 GPM for SR 4.1.1.2 by verifying at least one RCP in operation. Added 84 gallons of water from CVMT 2 to the Makeup Tank. [Boss, Kevin - Primary Rx Operator - Unit Log - Night Shift]

Print Print Range: Close

Start Folio Views - [USARRev22... Narrative Logs Repor... 10:57 AM

Unit Log

Monday, December 11, 2000

12/11 23:40	Notified Cleveland FAA Flight Service Station to cancel NOTAM CLEVELAND/12138. Cooling Tower lights have been verified to be working properly. (Burk, Randall - Control Room SRO)
12/11 20:30	Started Zone 3 tour. (Fehrmann, Stephen - Zone 3 Operator)
12/11 21:38	Zone 2 tour complete. (Rudolph, Tim - Zone 2 Operator)
12/11 21:43	Placed BAAT 2 on recirc for sample, due at 2343. Entered T.S. 3.1.2.2. (Burk, Randall - Control Room SRO)
12/11 21:46	Zone 3 tour complete. (Fehrmann, Stephen - Zone 3 Operator)
12/11 22:02	Zone 1 tour complete. (Justice, Adam - Zone 1 Operator)
12/11 22:03	Added Demin water to raise Hotwell level from 3.9 to 4.2 feet, Chemistry notified. (Boss, Kevin - Secondary Rx Operator)
12/11 22:25	SS 26, Letdown Sample Isolation, was discovered open during the performance of DB-OP-01200, RCS Leakage Management, Attachment 8. Referred to DB-CH-06002. SS 26 is normally closed after completion of a Purification Demin Inlet sample. Referred to DB-OP-00000, Attachment 3, Components Found Out of Desired Position. Performed DB-CH-06002, Attachments 2-5 for system lineup verification. Directed Chemistry to close SS 26. (Phillips, Thomas - MISC)
12/11 22:51	Notified Duty OPS manager, Duty Radiation Protection (Chemisty) Manager and Duty QIP Manager of the component out of desired position issue. (Myers, Larry - Shift Supervisor)
12/11 23:34	Completed Attachment 8 of DB-OP-01200 as requested by Operations Supt. All valves except SS 26 were found fully closed. (Phillips, Thomas - Asst. Shift Supv.- WSC)
12/11 23:47	Log turned over by Burk, Randall (Burk, Randall - Control Room SRO)
12/11 23:47	Log approved by Burk, Randall (Burk, Randall - Control Room SRO)

Plant Engineering Review Board – Reactor Coolant System

By A Siemaszko

Topics for discussion.

1. Maintenance Rule status
2. System performance
3. System monitoring - FatiquePro
4. Long Range Plan – Motor/pump/seal
5. RCS leak rate
6. Control Rod Drive issues – Rx Head/CVH/heat-up rate/inspection
7. Outage issues
8. New Service Structure proposal
9. Selected issues
    - Instrument Isolation Valves
    - Normal Sump sampling
    - Replacement of RC2 and RC262
    - RCP 1-2and 2-1 standpipe alarm.
10. Opportunities
    - Containment Air Sample methodology
    - Cameras in Containment
    - Five minutes RCP bumps
    - Power entry issues
    - Reactor Head O-rings
    - Permanent Seal Plate Modification
    - Tripod
    - Bently Nevada / Rx electrical penetration

Next Meeting 9th Tuesday

Closing comments.

- Find out E D-114 3 valves worked on. — good for outage walkdown
- Elaborate on RC13B — regard.

Pressurizer Relief Valve Outlet Temp's

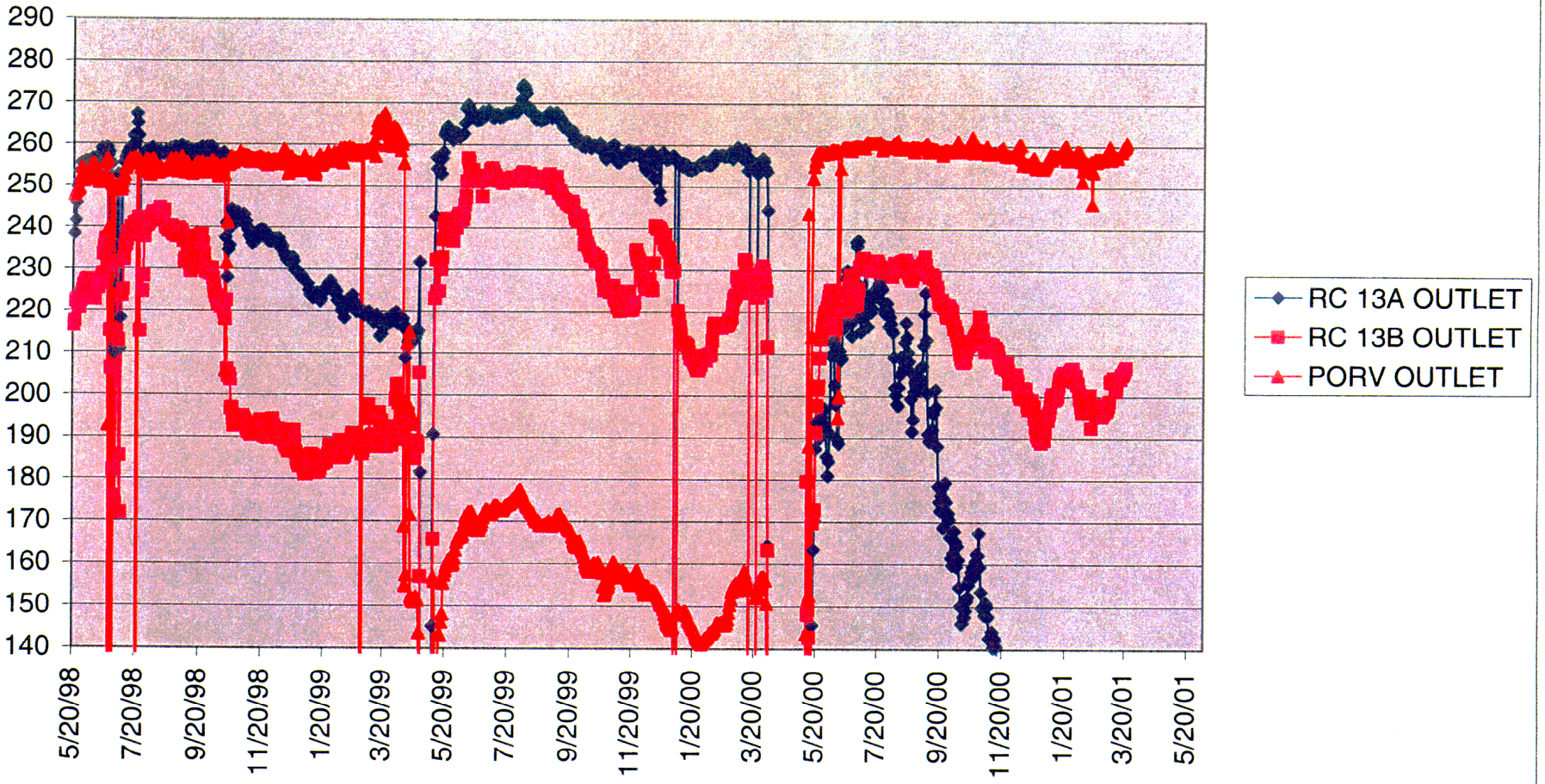

9

Nov-18-99 09:44am From- T-458 P.08/23 F-144

TABLE 1 - RCS FUNCTIONAL SPECIFICATION TRANSIENTS References [13] - [17])

RCS F/S	Description[4]	Condition	Design Cycles[1]				
			ANO-1	TMI-1[2]	CR-3	ONS-1,2,3	DB-1[2]
1A	Heatup from 70° F to 8% power	Normal	240	240	240	360	240
1B	Cooldown from 8% power to 70° F	Normal	240	240	240	360	240
1C	Natural circulation cooldown	Emergency	Non-F/S[3]	Non-F/S	Non-F/S	Non-F/S	20
2	Power change 0-15% or 15-0%	Normal	1440	1440	1440	1440	1440
3	Power loading 8-100%	Normal	18000	18000	18000	18000	1600
4	Power unloading 100-8%	Normal	18000	18000	18000	18000	1800
5	10% power increase	Normal	8000	8000	8000	8000	8000
6	10% power decrease	Normal	8000	8000	8000	8000	8000
7	Turbine trip/load rejection - (Power runback)	Upset	310	310	310	310	310
8A	Reactor trip - loss of RC flow	Upset	40	40	40	40	40
8B	Reactor trip - high RC outlet temperature	Upset	160	160	160	160	160
8C	Reactor trip - high RC pressure	Upset	88	88	88	90	88
8D	Reactor trip - 11,15,16,17, and 21	Upset	112	112	112	122	112
	Reactor trip - total		400	400	400	412	420[5]
9	Rapid depressurization	Upset	40	40	40	40	40
10	Loss of 1 RC pump - (Power runback)	Upset	20	20	20	412	20
11	Control rod withdrawal accident	Upset	40	40	40	40	40

?

7

RCS F/S	Description[4]	Condition	Design Cycles[1]				
			ANO-1	TMI-1[2]	CR-3	ONS-1,2,3	DB-1[2]
12	Hydrotests	Test	20/35	20/35	20/35	20/35	20/35
13	Steady-state power variations	Normal	∞	∞	∞	∞	∞
14	Control rod drop - (Power runback)	Upset	40	40	40	60	40
15	Loss of station power	Upset	40	40	40	40	40
16	Steam line failure	Faulted	1	1	1	1	1
17A	MFW loss to SG	Upset	20	20	20	30	20
17B	Stuck Open Turbine Bypass Valve (SG blowdown)	Emergency	10	10	10	10	10
18	Loss of feedwater heater	Upset	40	40	40	620	40
19	Feed and bleed operations	Normal	4000	4000	4000	4000	4000
20A	Makeup Cycling	Normal	30000	30000	30000	30000	30000
20B	Pressurizer Spray Cycling	Normal	20000	20000	20000	20000	20000
21	Loss of coolant	Faulted	1	1	1	1	1
22A	HPI test	Normal	40	46	40	40	40
22B	Core flood check valve test	Normal	240	240	240	240	240
23A	SG secondary side filling	Normal	240	240	240	240	240
23B	SG primary side filling	Normal	240	240	240	240	240
23C	Steam generator flushing	Normal	40	40	40	40	40
23D	Steam generator cleaning	Normal	20	20	20	20	20
24	Hot functional test	Normal	NA	1	1	NA	1

See attached notes.

8

Nov-18-99 09:44am From- T-458 P.11/23 F-144

TABLE 2 - NON-RCS F/S TRANSIENTS [1]

Non-RCS F/S	Description	Condition	Design Cycles[2]			
			ANO-1	CR-3	ONS-1, 2	ONS-3
N1	Bypass spray flow interrupt/restoration Reference [18]	Normal	10	NA[3]	NA	NA
N2	HPI check valve test Reference [12]	Normal	NL[4]	156[5]	153[5]	153[5]
N3	Dry, depressurized SG refill Reference [19]	Upset	50	50	50	50
N4	RC pump restart with voids in RCS Reference [20] and [36]	Upset	35	35	18	18
N5	Natural circulation cooldown Reference [21]	Emergency	40[6]	NA	NA	NA
N6	Loss of feedwater[7] References [22], [23], and [24]	Upset	40	NA	NA	NA
N7[8]	HPI actuation References [25], [26], [14], [15], and [16]	Upset	110	11	110	110
N8[9]	EFW actuation References [27], [28], [14], [15], and [16]	Upset	2385	1510	1510	158
N9	Loss Of Letdown Flow	Upset	NA	NA	NA	NA
N10	Loss Of Makeup Flow	Upset	110[10]	11[10]	TBD[10]	TBD[10]
N11	Large Reduction in Makeup Flow	Normal	NA[11]	NA[11]	TBD[11]	TBD[11]
N12	Small Reduction in Makeup Flow	Normal	NA[11]	NA[11]	TBD[11]	TBD[11]
N13	Pressurizer Spray Cycling	Normal	3120[12]	3120[12]	TBD[12]	TBD[12]
N14	Auxiliary Spray Cycling	Normal	80[13]	NA[13]	720[13]	720[13]

9

(10)

BENEFITS

Provided below are some of the reasons for implementing **FatiguePro**. Ignoring cost issues for the moment, the following four reasons are the key benefits of **FatiguePro**:

1. Inspection Relief: In some plant locations (typically Class 1 piping or feedwater nozzles), there may be augmented inspection requirements (i.e., more frequent than once every 10 years) because of high fatigue usage. For example, the ASME Code has requirements for piping locations with a design fatigue usage greater than 0.4. If it can be demonstrated that actual operating fatigue usage is much less than 0.4, then a technical argument can be made to remove some of the augmented inspection requirements (i.e., return the inspection frequency to 10 years). Although this can be done manually, assessment of actual plant fatigue usage is best done with an automated system, because every actual plant event is unique.

2. Technical Specification Requirements: Plant Technical Specifications require plant operators to count and categorize plant transient events. The purpose of this requirement is to ensure that the plant operates within the limits set by the design basis for the operating life of the plant. Meeting this requirement demonstrates that the plant maintains structural margins. As with Item 1 above, the effort is greater than if an automated system is employed (especially if event-specific data is to be archived).

3. Cycle Counting May Not be Adequate: For some components (like the feedwater nozzles), cycle counting alone may not be adequate for demonstrating long-term structural acceptability. Operating experience with all types of reactors world-wide has continually demonstrated that plants experience more cycles for some critical events than was assumed in the design basis. This fact makes it difficult to demonstrate acceptable fatigue usage when only the number of events is known. However, actual operating experience has also demonstrated that actual plant transients are significantly less severe than the events assumed in the design basis. Incorporation of plant severity thus overrides the fact that there may have been a higher number of cycles, and acceptable fatigue usage can be demonstrated. This assessment of actual plant events is best done with an automated system.

4. License Renewal: Demonstration of acceptable structural margins (i.e., usage less than 1.0) beyond the original design life for license renewal most likely will require more detailed transient tracking efforts than cycle counting alone because of the 50% increase in the number of cycles (60 years of cycles vs. 40 years of cycles in the U.S.). As with Item 1 above, cycle counting alone may not be adequate to address the increased number of cycles considered for the license renewal period. This process is best implemented well before the end of the original design life to ensure that all issues are addressed by the time the license renewal period begins.

Of course, each of these items has a financial consideration that a utility would develop and consider prior to deciding to implement **FatiguePro**.

With respect to Item 2, the U.S. NRC mandates plants to follow the requirements specified in their Updated Final Safety Analysis Report (UFSAR). The UFSAR refers to the plant Technical Specifications for some of these requirements. One of the requirements identified in the plant Technical Specifications is component transient and cyclic limit tracking (i.e., cycle counting). Despite the fact that these requirements are mandated by the U.S. NRC, the U.S. NRC is not monitoring utilities as to whether or not they are following these guidelines.

Because the U.S NRC does not monitor these requirements, there have been no submittals made to the U.S NRC on this subject. This is why utilities have not made U.S. NRC submittals to-date using the results of **FatiguePro**. This is also why the Technical Report SI/EPRI prepared for **FatiguePro** was not submitted to the U.S NRC for approval. Instead, demonstration of the fulfillment of the Technical Specification requirements is required as a part of license renewal submittals. Therefore, the **FatiguePro** Technical Report and **FatiguePro** results have been a key element of the Calvert Cliffs and Oconee license renewal submittals. Except for license renewal considerations, there are no requirements for a utility to make a U.S NRC submittal for simply using **FatiguePro** to fulfill their Technical Specification requirements. This is

(11)

because the Technical Specifications do not prescribe HOW to track cycles -- only that they need to be tracked. Thus, it is the utility's responsibility to decide how to fulfill this requirement.

The bottom line is that the U.S. NRC is not specifically monitoring whether or not plants are tracking their cycles. However, it is clear that some time in the future they will ask for utilities to address license renewal structural integrity concerns. When that happens, **FatiguePro** will be the primary portion to the response (for those utilities that use it).

Cost/Benefit

In general, it is difficult to associate direct cost-savings of a fatigue monitoring software system, such as **FatiguePro**. However, if your plant personnel are currently spending a significant amount of time tracking fatigue usage and cycles, you can certainly count on the time-savings that **FatiguePro** will offer. This cost-savings is "plant-specific." Some plants spend a lot of time tracking cycles, while others spend little or no time until a problem arises. For some utilities, **FatiguePro** is like an insurance policy: The savings are dramatic when problems arise. In the long run, **FatiguePro** is a relatively inexpensive insurance policy that pays dividends along the way.

The following are two cost-benefit examples of **FatiguePro**.

Example No. 1

- It costs this plant $100,000 per component to perform a detailed fatigue analysis or re-analysis. (At least three components required this, resulting in a cost-savings of $300,000, because **FatiguePro** was used to perform the analysis).
- BWR feedwater sparger replacement costs **$10,000,000** to **$20,000,000** in the event that spargers had to be pulled for NUREG-0619 exams. (This plant used the argument that if the fatigue usage or crack growth was low, inspections could be reduced or eliminated).
- **FatiguePro** eliminates the need for the evaluation of scrams and severe heatup/cooldowns required by Technical Specifications. The cost per event is at least **$10,000**, possibly higher depending upon the severity.
- Fatigue tracking costs are eliminated with **FatiguePro**. This cost-savings is approximately **$20,000** per fuel cycle for outside vendor work, in addition to internal project management and paper costs.

Thus, the allocation of **$150,000** to **$200,000** for **FatiguePro** was more than justified at this BWR plant.

Note that this cost-benefit analysis did not include the cost associated with License Renewal, which is currently not an issue for this plant. Additionally, the cost associated with the reduction of in-service inspections for other monitored locations were not included in this cost-benefit analysis (i.e., if the computed fatigue is low, inspections are not warranted).

Example No. 2 (Two Units)

- Unit 1 of this plant is likely to exceed the design number of 120 startup/shutdown cycles before the end of its 40-year design life. Thus, **FatiguePro** provides the analytical justification to operate for additional cycles. In addition, **FatiguePro** extends the life of fatigue-critical components without the need for re-analysis, such as feedwater nozzles. Minimum costs to have a vendor perform such work are expected to be **$100,000**.
- **FatiguePro** provides an "automatic" analysis of stress-based locations (feedwater nozzles and control rod drive penetrations) in the event of any "out of design limit" transients.

(12)

FatiguePro saves a minimum of **$20,000** per transient, in addition to the significant costs associated with an un-planned shutdown waiting for engineering analysis results.

- **FatiguePro's** automated cycle counting saves this plant approximately 80 manhours per year, or 2,200 manhours for the remaining life of both units. This results in a direct manhour cost-savings of nearly **$150,000**.

Note that additional analytical, inspection, and un-planned shutdown costs may also be avoided with **FatiguePro's** capability of evaluating and monitoring identified cracks. Further "intangible benefits" of **FatiguePro** are the ability to simulate plant transients, to determine plant operating methods that minimize fatigue, and the ability to quickly and easily review plant data.

Tripod Issues.

Undetermined amount of pins and parts are missing.

Parts are not coded

There is no assembly procedure in place.

There is no owner of cleanup and assembly process identified.

(Tripod drawings are: M-503-527-3, M-503-528-3, M-503-529-3, and M-503-596-1).

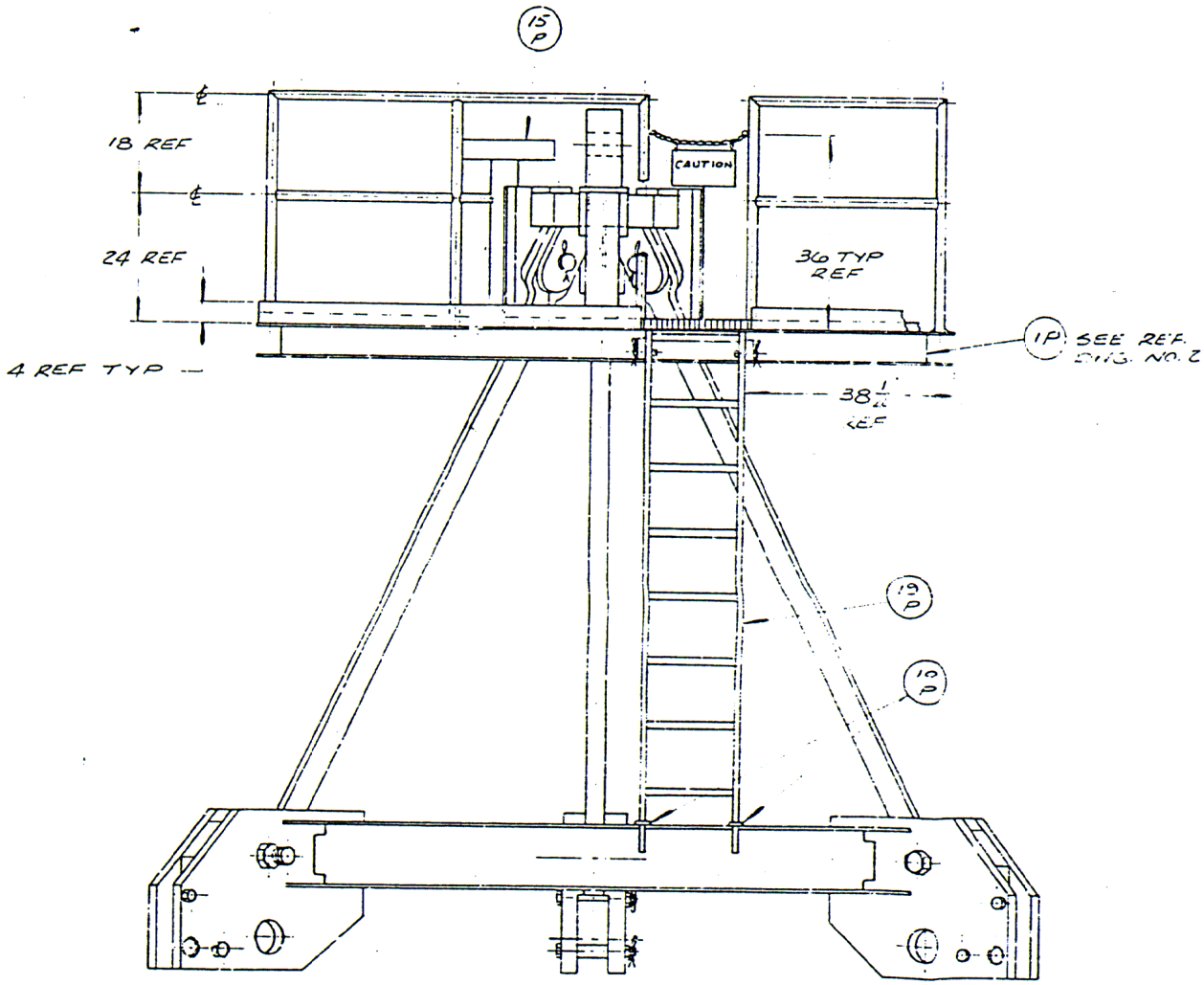

1 TP HANDLING FIXTURE & PLATFORM ASSEMBLY
SEE NOTES 4,5,6,8 & TABLE 2.

FEARMS DAVIS-BESSE PLANT

SUB062-01

Work Order 01-000806-000 PM

Subsystem: SUB062-01

Asset: SUB062-01 RX VESSEL INTERNAL, & LIFTING FACILITIES
Problem Locn: ***** **** ***
File no: 5802 **Route:** 00000

45

Action: PREVENTIVE MAINTENANCE
WO Type: Repetitive
Clearance: N

Work Class:
Mat.Acct: 0465.0465.IS.NP13B.DRRX.00000.00
Printed: 26-FEB-01 13:27 DJJ

Clearance number:
Tech Spec: N
Test Requirements: N
Lead Craft: MECH

Quality Class: Q
Environmental Qualification: N
ASME Component:
Repair Tag Number:
Train:

Permission to Commence Work

SS/SM Authorization: _____ **DATE** _____

SUPERVISOR _____ **DATE** _____

Requested by: PM PLANNER, **Phone:** 7237
Planner: LEAD LEAD PLANNER MECH **Phone:**

Work Description:
PM 5802 *REASSEMBLE* RV LIFTING DEVICE

Work Order Review

ALARA _____ DATE 2/28/01

QC Mechanical _____ DATE 3/5/01

SRO _____ DATE 3/14/1

Lead Shop Review _____ DATE _____

Special Instructions:
Contact R.P. prior to work and for RWP number.

Related Documents

PROCEDURE(S)
DB-MM-04010

FEARMS DAVIS-BESSE PLANT

SUB062-01

Work Order 01-000338-000 PM

Subsystem: SUB062-01

Asset: SUB062-01 RX VESSEL INTERNAL, & LIFTING FACILITIES
Problem Locn: ***** **** ***
File no: 4756 **Route:** 00000

46

Action: PREVENTIVE MAINTENANCE
WO Type: Repetitive
Clearance: N

Work Class:
Mat.Acct: 0465.0465.IS.NP13B.DRRX.00000.00
Printed: 26-FEB-01 14:05 DJJ

Clearance number:
Tech Spec: N
Test Requirements: N
Lead Craft: MECH

Quality Class: Q
Environmental Qualification: N
ASME Component:
Repair Tag Number:
Train:

Permission to Commence Work

SS/SM Authorization: _____ **DATE** _____

SUPERVISOR _____ **DATE** _____

Requested by: PM PLANNER,
Planner: LEAD LEAD PLANNER MECH

Phone: 7237
Phone:

Work Description:
PM 4756 *INSP* RX LIFTING DEVICES

Work Order Review

ALARA	[signature]	DATE 2/28/01
QC Mechanical	[signature]	DATE 3/1/01
SRO	[signature]	DATE 3/2/01
Lead Shop Review		DATE

Special Instructions:

Contact R.P. prior to work and for RWP number.
Notify QC to perform M.T per step 1.

Related Documents

PROCEDURE(S)
DB-MM-04005
DB-MS-04006
DB-MM-04010

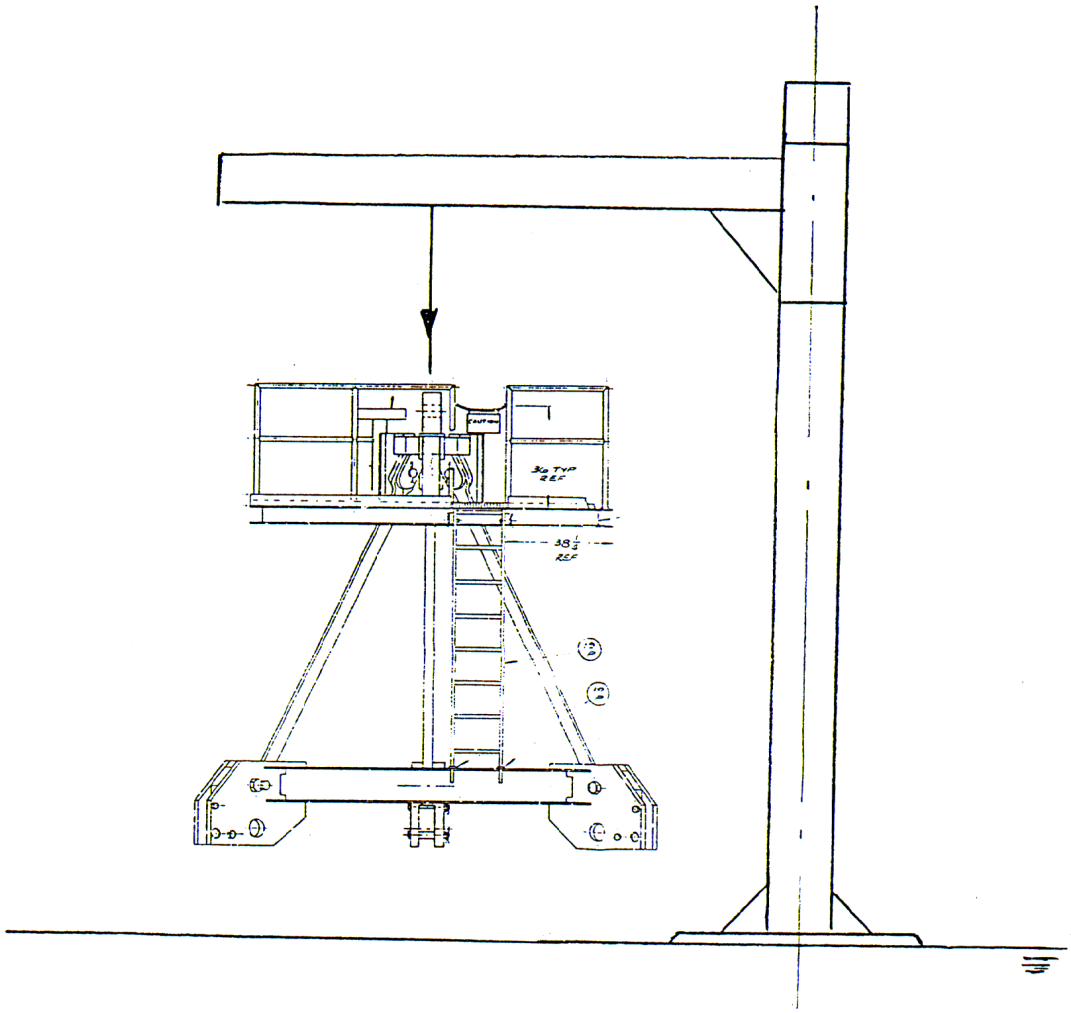

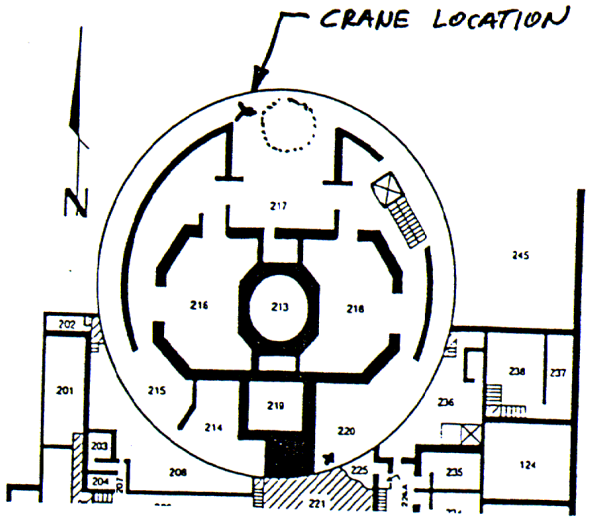
CRANE LOCATION
N
217
245
216
213
218
202
201
215
219
214
220
236
238
237
203
204
208
225
235
124
221

3500 RACK

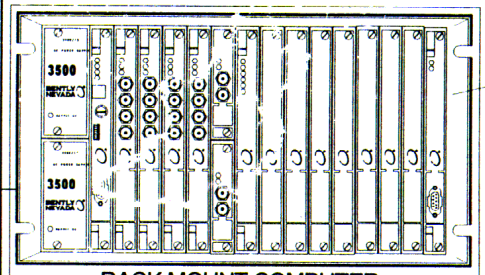

Vibration Transducers to 3500 Rack

Proximity / Vibration	8
Seismic / Accel-	8
Keyphasor -	8
Total	20

3500 Data Acquisition and Display Software Connection RS422

RACK MOUNT COMPUTER

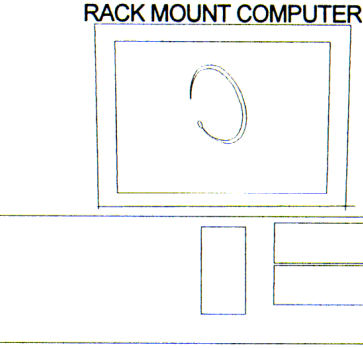

Data Manager 2000 Ethernet Connection

Process Data Points to PDMs

Process Data Managers 36 pts. each

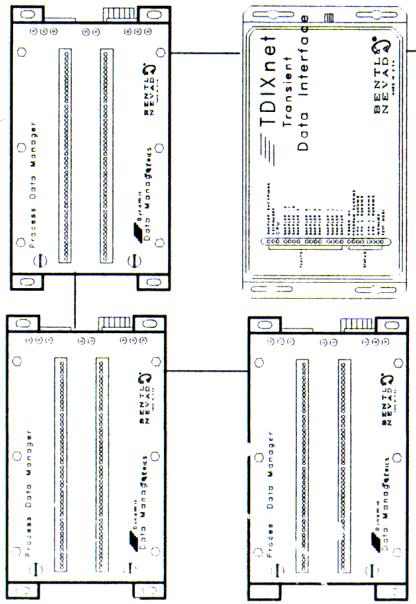

Vibration Data from 3500 Rack

BENTLY NEVADA®

MINDEN, NEVADA – USA

CUSTOMER	First Energy Davis Besse
DRAWING	
DATE	DRAWN
BNC JOB#	SIZE A

48

REVIEW & ASSESSMENT OF NON-ISOLABLE PIPING FOR THERMAL FATIGUE STRATIFICATION + CYCLING

DAVIS-BESSE PLANT

ART DEARDORFF

PAUL HIRSCHBERL

STRUCTURAL INTEGRITY ASSOCIATES

6/16/00

Hypothetical Turbulence Penetration Cycling of Drain Line

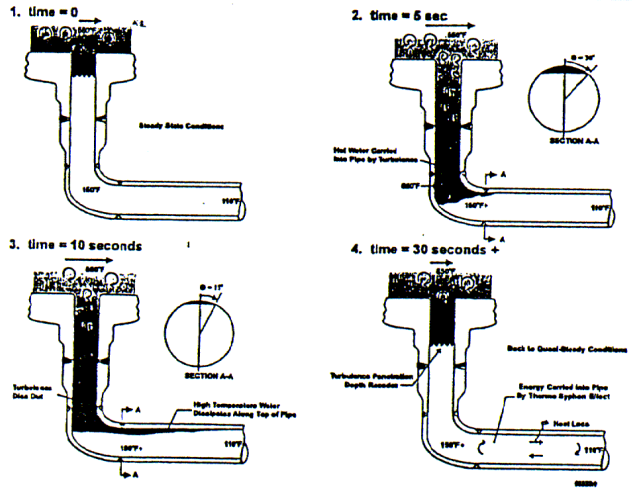

PRS-00-042/25

Rev
Pre
Ch
File No.

50

MAKEUP / HPI ALIGNMENT

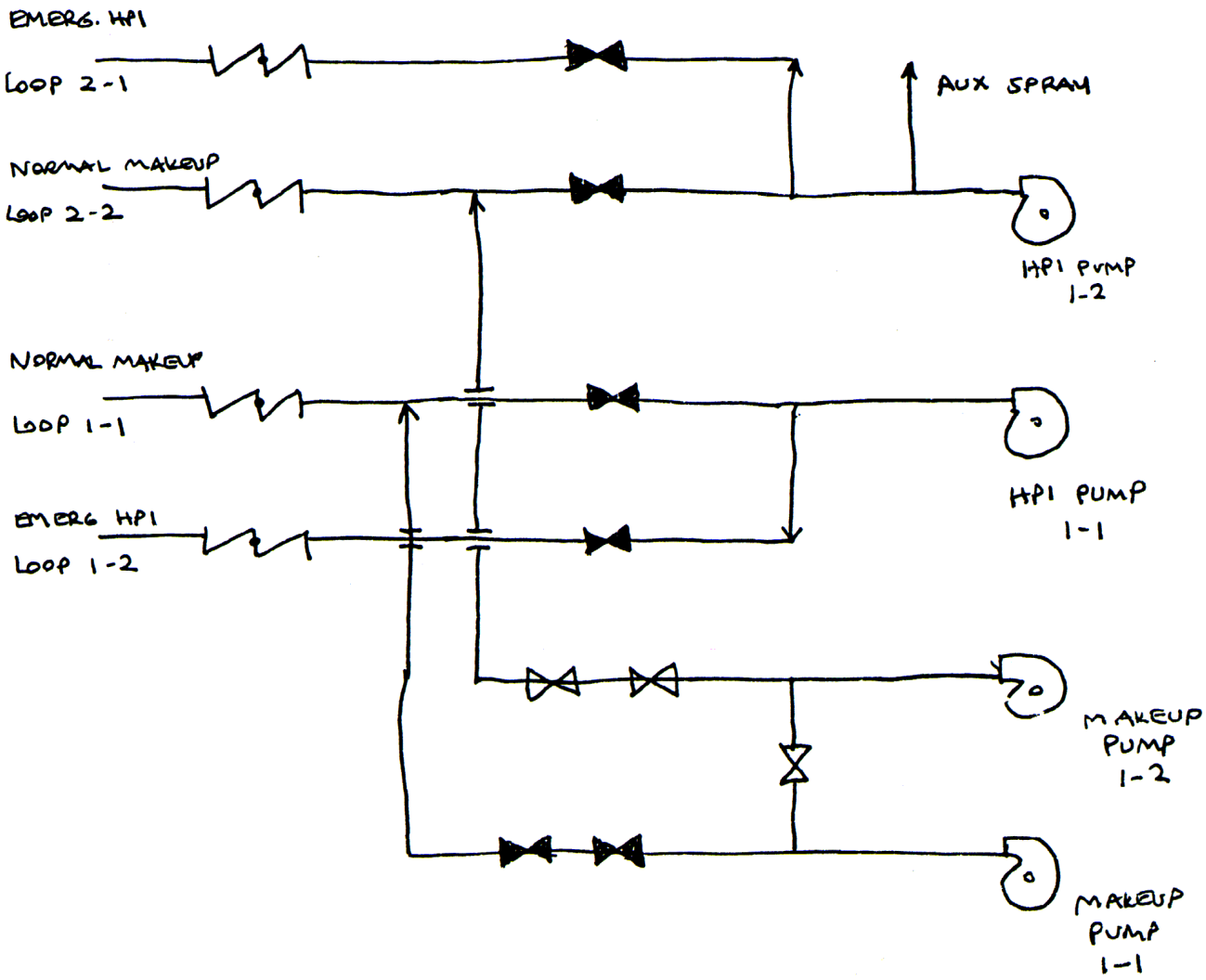

Revision		
Preparer/Date		
Checker/Date		

Page 2 of

File No.

MAKEUP / HPI NOZZLES

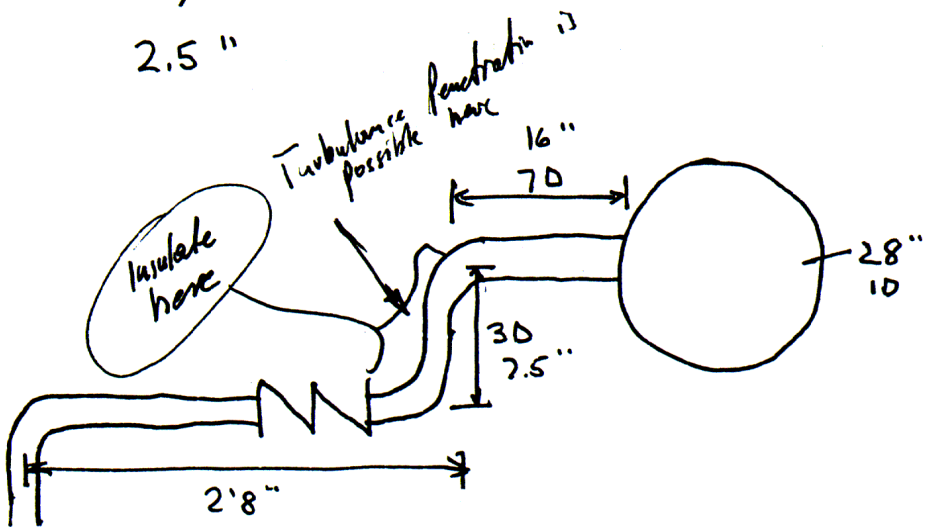

- RELATIVELY SHORT DISTANCE FROM LOOP TO CHECK VALVES
- LINE WILL RUN HOT UP TO CHECK VALVES
- LEAKAGE PAST ISOLATION VALVE NOT A PROBLEM BECAUSE
  - NORMAL MAKEUP LINE NOT IN SERVICE HAS DOUBLE ISOLATION
  - HPI PUMPS NORMALLY OFF, SO NO PRESSURE TO DRIVE LEAK

∴ NO PROBLEM

	Revision					
	Preparer/Date					
	Checker/Date					
File No.				Page 3 of		

DECAY HEAT RETURN / CORE FLOOD

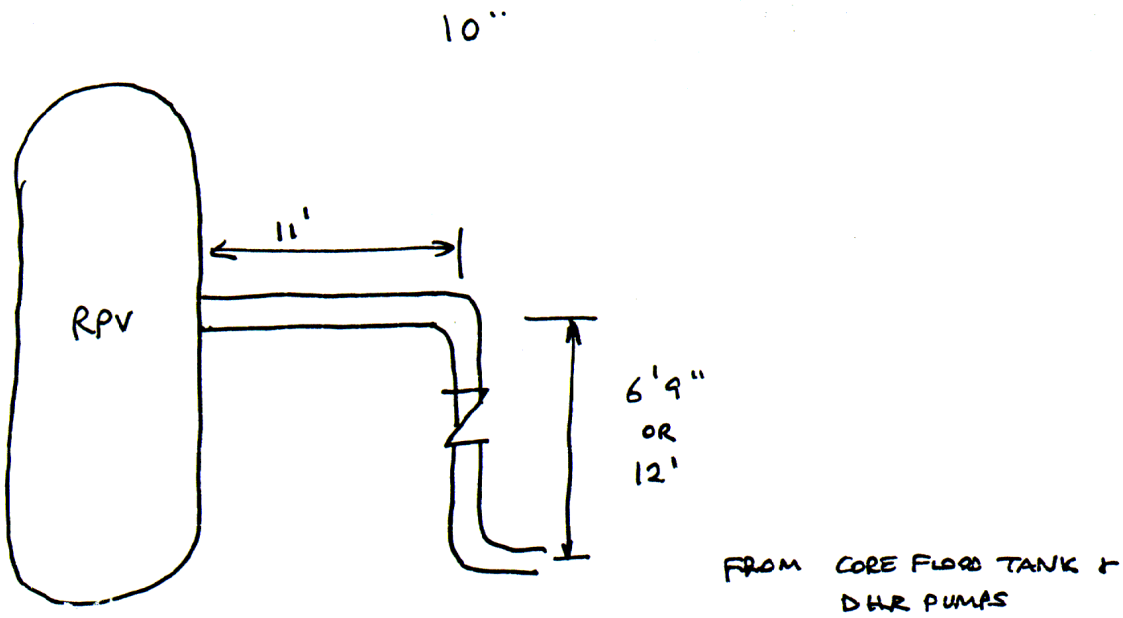

- LINE WILL BE HOT TO CHECK VALVE
- NO TURBULENCE PENETRATION
- MAY BE A SMALL AMOUNT OF STRATIFICATION BUT NO CYCLING

∴ NO PROBLEM

	Revision					
	Preparer/Date					
	Checker/Date					

File No. Page 4 of

DECAY HEAT REMOVAL
DROP LINE
12"

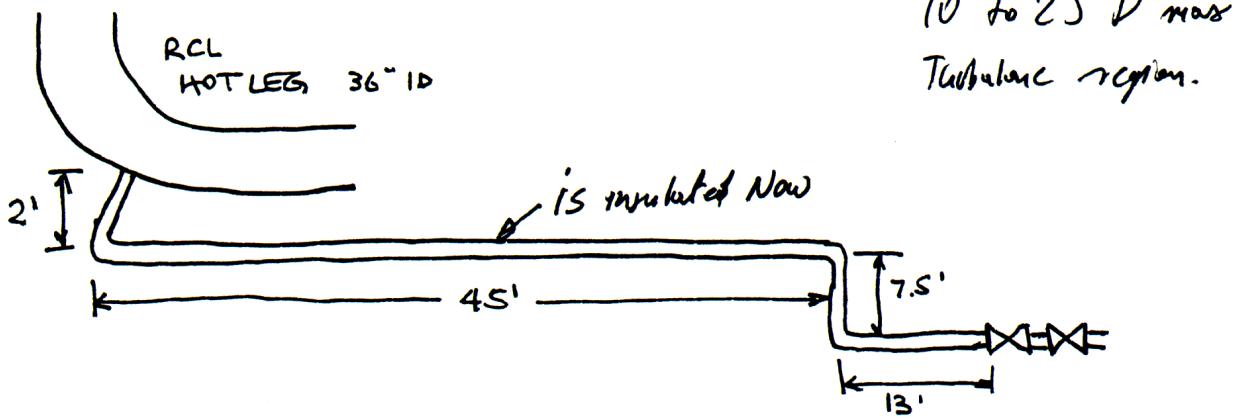

- TURBULENCE PENETRATION WELL BEYOND FIRST ELBOW, SO ELBOW REGION OK
- 45' LONG HORIZONTAL RUN WILL BE STRATIFIED BY NATURAL CONVECTION
- SECOND VERTICAL RUN SHOULD BE COLD

LONG HORIZONTAL RUN COULD BOW DUE TO STRATIFICATION AND CAUSE HIGH GLOBAL MOMENTS AT POINTS OF CONSTRAINT

RECOMMEND INSTRUMENTING LINE TO MEASURE STRATIFICATION

	Revision					
	Preparer/Date					
	Checker/Date					

File No. Page 5 of

RCL DRAINS
2½"

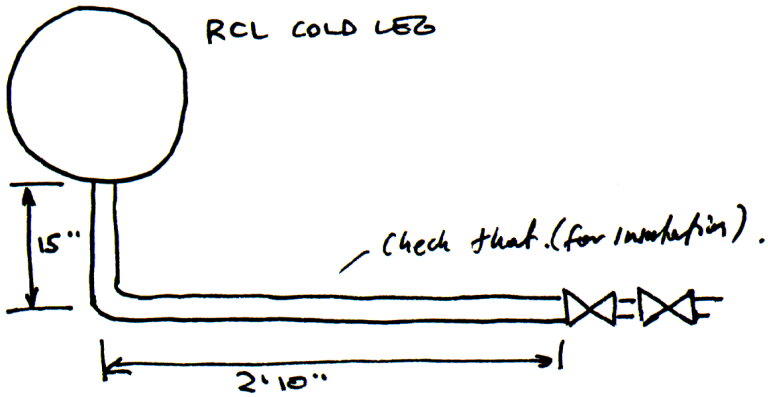

- IF DRAINS ARE INSULATED, NO PROBLEM DISTANCE TO VALVE IS RELATIVELY SHORT
- IF NOT INSULATED, TURBULENCE PENTRATION BOUNDARY IS NEAR ELBOW, AND HORIZONTAL RUN WILL STRATIFY
- POSSIBILITY OF HIGH CYCLE FATIGUE AT ELBOW IF HORIZONTAL RUN NOT INSULATED

∴ ASSURE HORIZONTAL RUN IS INSULATED TO VALVE

	Revision					
	Preparer/Date					
	Checker/Date					

File No. Page 6 of

(5)

PRESSURIZER SPRAY / AUXILIARY SPRAY

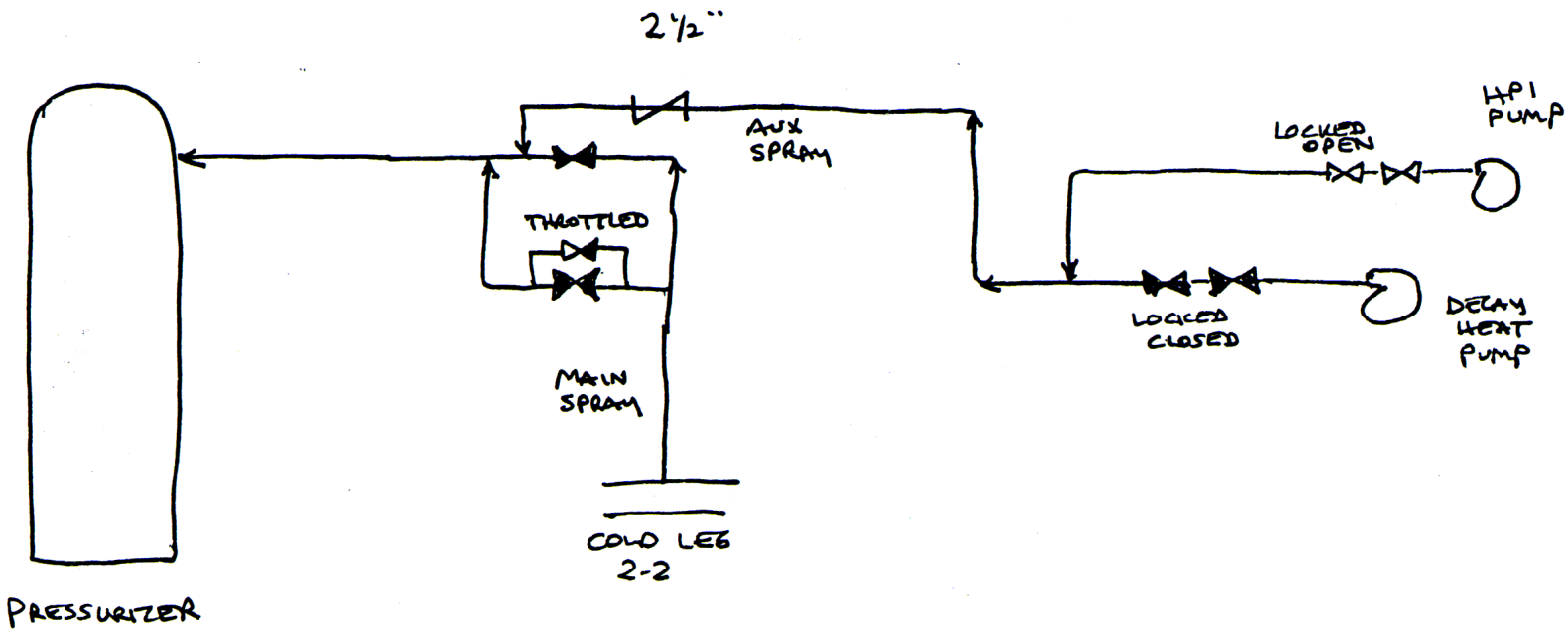

- WHEN IS HPI PUMP RUNNING ?
- IN ORDER TO PREVENT PRESSURIZER STEAM FROM ENTERING THE LINE WHEN RCP 2-2 IS OFF, AUX SPRAY MUST KEEP LINE FULL
- IF AUX SPRAY IS CYCLED WHEN RCP 2-2 IS OFF, THERMAL CYCLING WILL OCCUR

Revision	Preparer/Date	Checker/Date

File No.

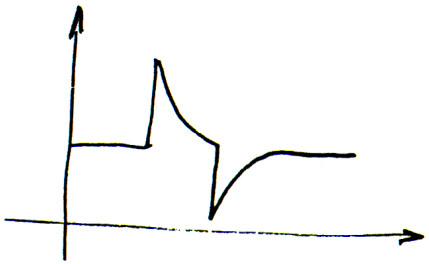

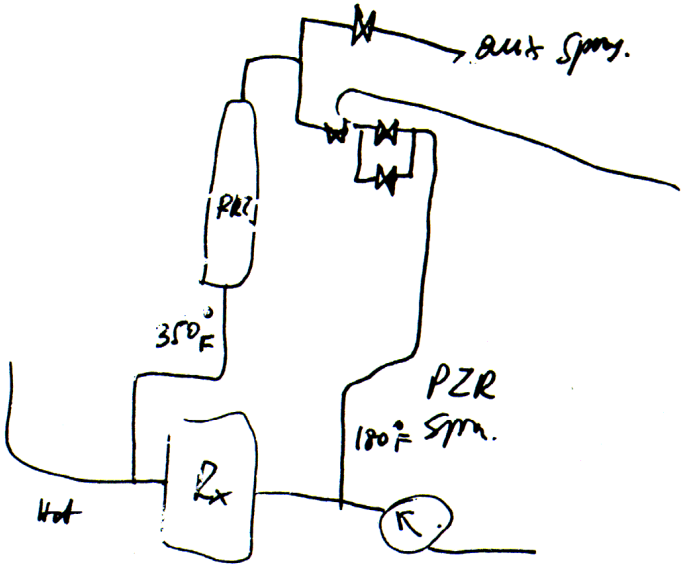

close the block valve while initiate Aux Spray.

a) 1st initiate Aux Spray and then shut 2-2 RCP

b)

RCS Leakage Reduction Program

Goal 1. To establish the achievable leak rate value for Davis Besse.

Results: **The minimum achievable leak rate is 0.05 GPM**

Bases: The minimum achievable leak rate of 0.05 GPM is established based on B&W owners group findings. The expected unidentified leak rate for all B&W plants is between 0.05 and 0.1 GPM. Efforts will be made to reduce the unidentified leak rate to 0.05 GPM. Detailed approach plan is presented below. Based on the available procedural guidance, available instrumentation and systems configuration it is uneconomical to lower the unidentified leak rate to below 0.05 GPM.

Goal 2 To reach minimum leak rate established in Goal 1.

Results: **Average leak rate is __0.07__ GPM**. Color rating is **WHITE**

The color rating is based on the mathematical average 7-day leakage value.

Green	0.00 – 0.05 GPM	No actions required.
White	0.05 – 0.15 GPM	Increased monitoring.
Yellow	0.15 – 0.25 GPM	Aux. Bldg. walkdowns to locate the leak.
Red	> then 0.25 GPM	Decisive actions taken.

Actions

To reduce the unidentified leak rate to below 0.05 the following actions are recommended:

- Isolate Reactor Coolant Drain Tank in 8 locations and determine the source.
- Verify letdown demmineraliser drain is not leaking.
- Enable LLRT ability for each valve being manipulated during performance of RCS Water Inventory Balance DB-SP-03357 and PASS sampling procedures.
- Evaluate Modifying Quench Tank Level Transmitter LT 225 to remove the "noise" in data collection.
- Evaluate Reactor Coolant Drain Tank Level Transmitter LT 1721 to remove the "noise" in data collection.
- Provide CRD flanges and RCP stud leakage indication.
- Provide methods to quantify RCS water evaporation rate to the Gaseous Collection Header from various souses.

(The Actions are assigned as Follow-up Actions of CR 2000-1567)

MCTM Management.
Establish the minimum achievable unidentified leak rate.
Due Date: MCTM meeting on 8/30/00

Systems Engineering.

Action 1 – Incorporate changes to DB-OP-01200 RCS leakage management.
Due Date _____

Action 2 – Hold RCS system team meeting on revising DB-OP-01200 Reactor Coolant System Leakage Management to incorporate actions to be taken in the event of the leak rate change.

Action 3 – Coordinate Benchmarking efforts between other B&W plants to evaluate methods of unidentified leak reduction.

Operations
Action 1 – Evaluate and document timing of the RCS leak rate test versus existing plant conditions during the execution of the test (DB-SP-03357). Evaluate performing the test during the similar plant configurations.

Radiation Protection
Action 1 – Evaluate dose savings and/or financial gain from reducing the unidentified leak rate by 0.05 GPM.
Due Date _____

Action 2 – Outline current action plan and future actions to be taken by the RP personnel in the continuous effort of surveying the Auxiliary Building to locate the unidentified leaks.
Due Date _____

Systems Engineering recommendations:

At the present time monitor systems and evaluate new approaches to leak reduction through the benchmarking and research.
In the future - prepare to act as needed.

07/13/00 13: 30: 00
PLOT STOP AT
07/13/00 18: 25: 00

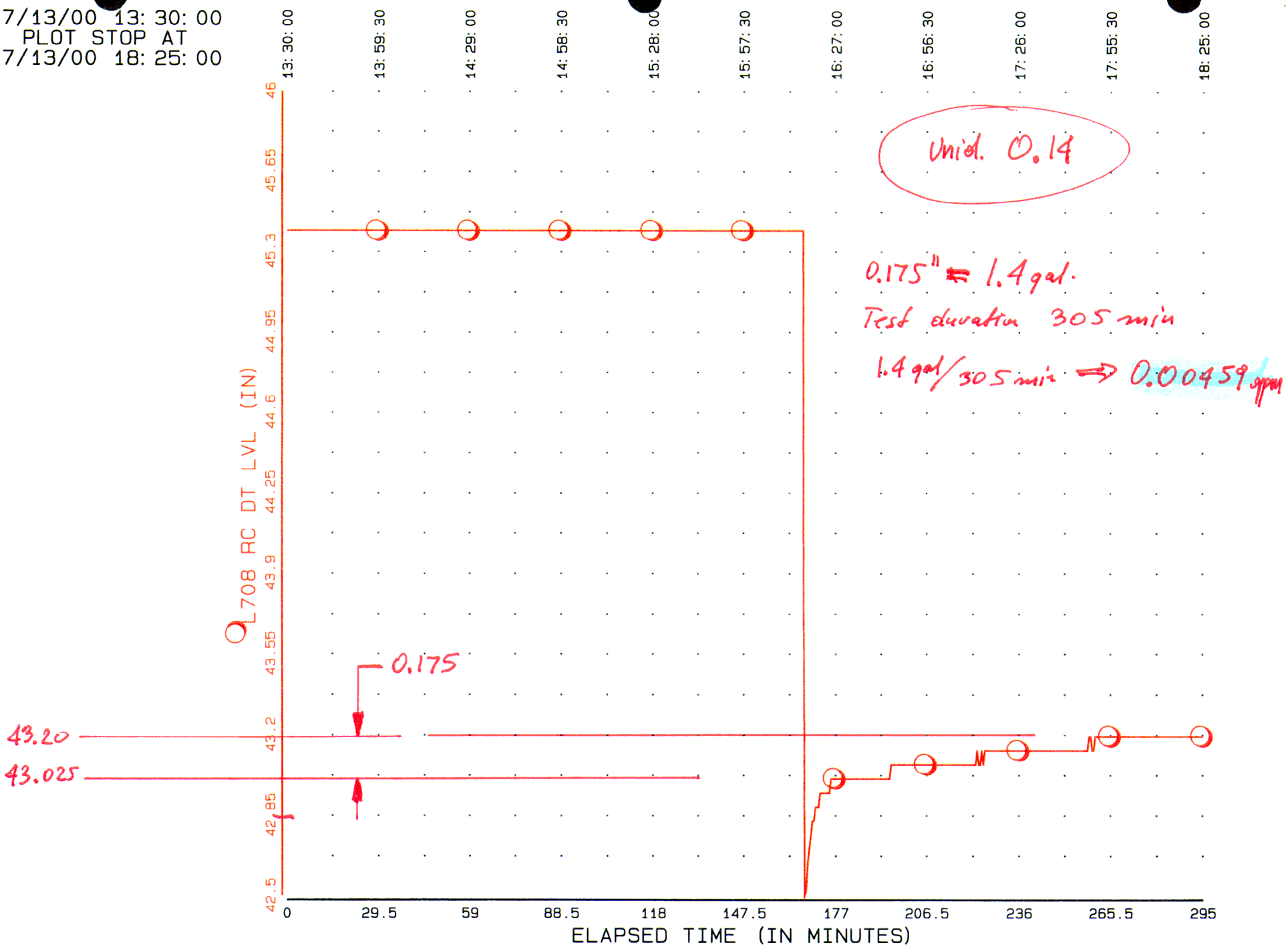

07/12/00 13: 00: 00
PLOT STOP AT
07/12/00 18: 08: 00

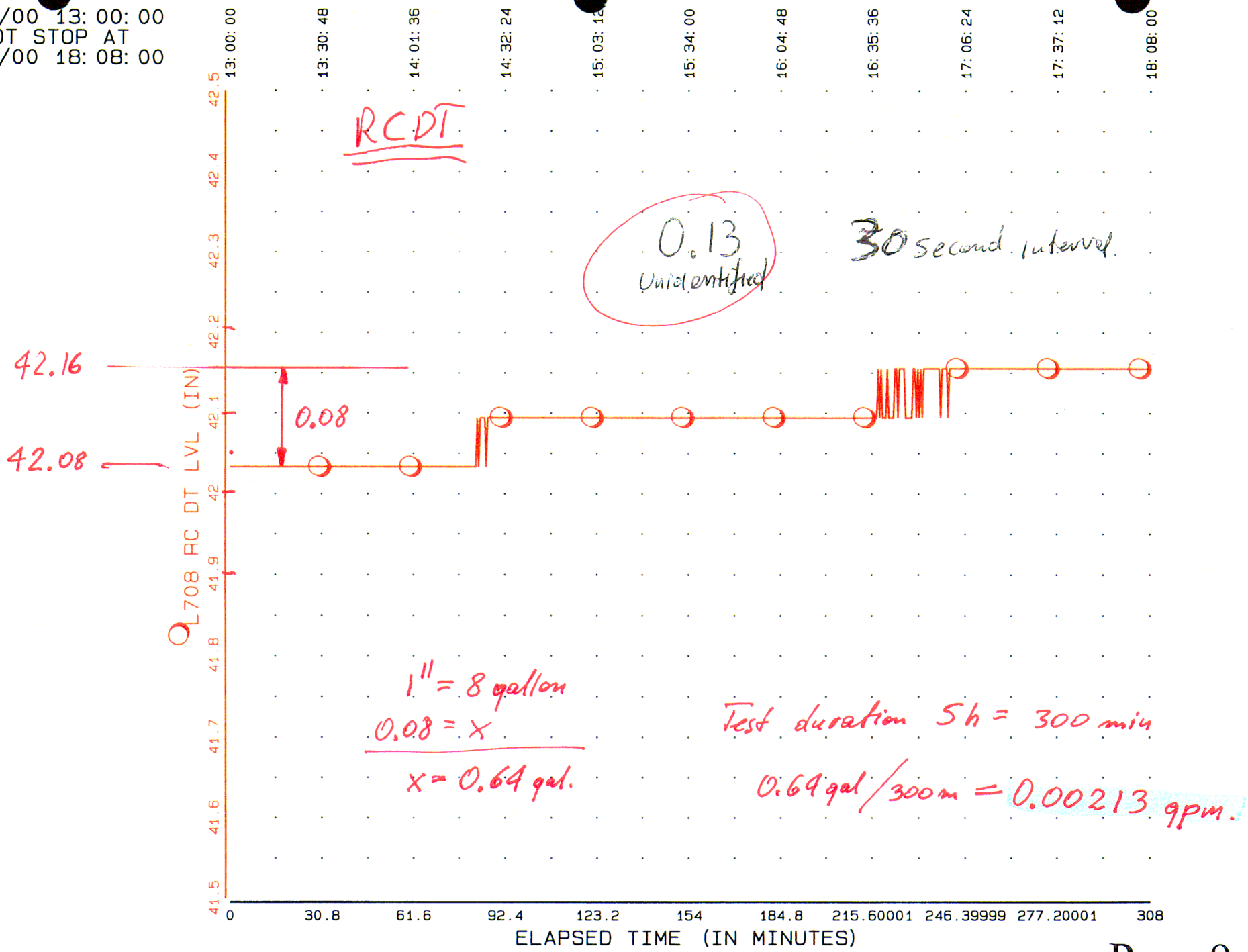

ATTACHMENT 43: RCDT LEAKAGE SOURCES

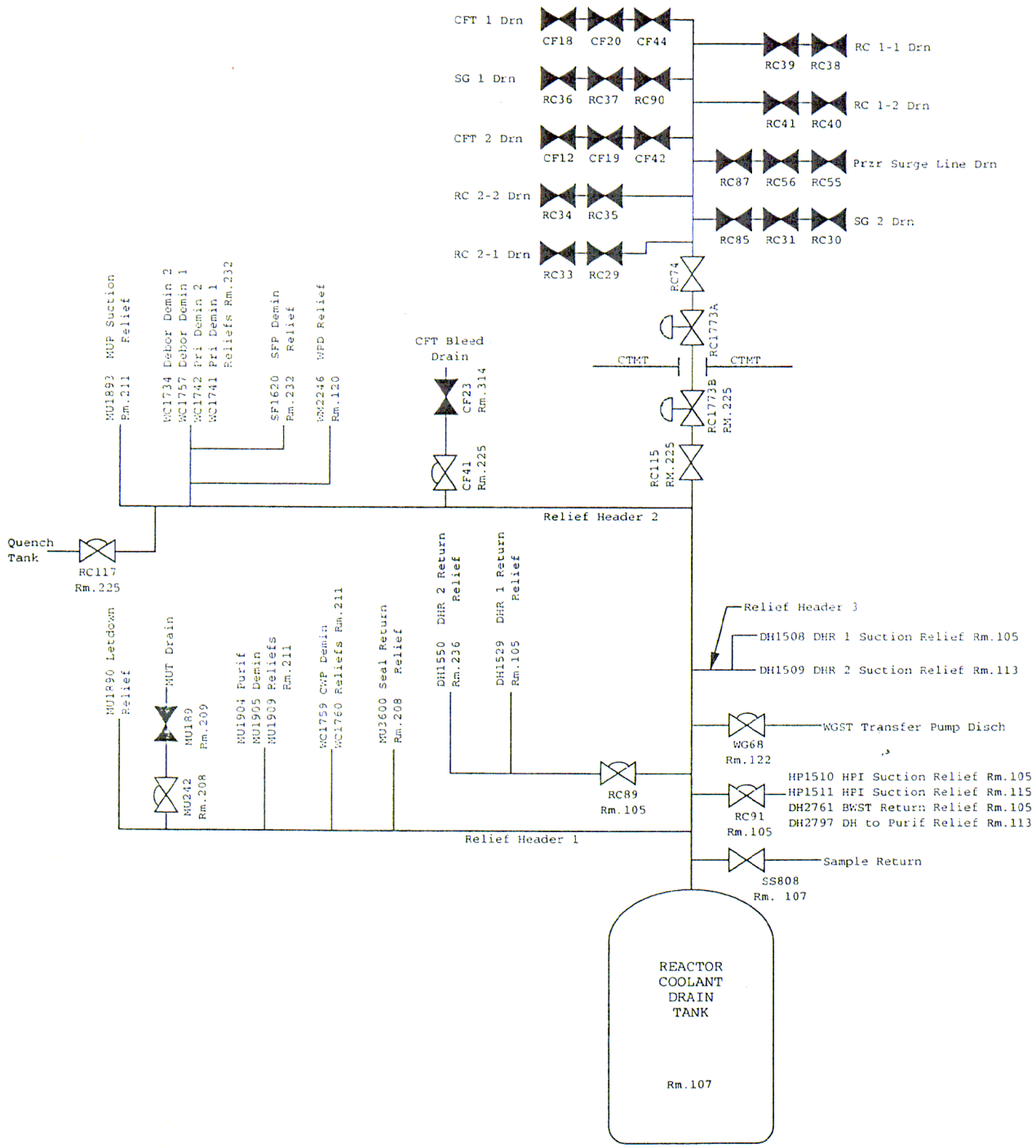

CONTROL ROD DRIVE PATCHING REFERENCE TABLE FOR CYCLE 13

SORT BY CORE LOCATION

GROUP	ROD	MECH NO	CORE LOC	RPI AMP LOC\ XFER MOD CAB POS	API AMP IN SL3	CTRM PI LOC NO
4	8	22	B6	3-1	R-4	24
6	1	23	B8	3-2	R-5	38
4	1	24	B10	3-3	R-6	17
2	8	10	C5	2-1	Q-10	12
5	12	25	C7	3-4	R-7	37
5	1	26	C9	3-5	R-8	26
2	1	27	C11	3-6	R-9	5
7	8	11	D4	2-2	Q-11	53
8	1	1	D6	1-1	Q-1	54
7	1	28	D8	3-7	R-10	46
8	2	2	D10	1-2	Q-2	55
7	2	34	D12	4-1	R-16	47
2	7	12	E3	2-3	Q-12	11
5	11	13	E5	2-4	Q-13	36
5	2	35	E11	4-2	R-17	27
2	2	36	E13	4-3	R-18	6
4	7	14	F2	2-5	Q-14	23
8	3	3	F4	1-3	Q-3	56
6	8	15	F6	2-6	Q-15	45
3	1	31	F8	3-10	R-13	13
6	2	32	F10	3-11	R-14	39
8	4	4	F12	1-4	Q-4	57
4	2	37	F14	4-4	S-1	18
5	10	16	G3	2-7	Q-16	35
1	4	18	G7	2-9	Q-18	4
1	1	33	G9	3-12	R-15	1
5	3	39	G13	4-6	S-3	28
6	7	19	H2	2-10	R-1	44
7	7	20	H4	2-11	R-2	52
3	4	21	H6	2-12	R-3	16
4	9	9	H8	1-9	Q-9	25
3	2	40	H10	4-7	S-4	14
7	3	41	H12	4-8	S-5	48
6	3	42	H14	4-9	S-6	40
5	9	58	K3	6-1	T-4	34
1	3	60	K7	6-3	T-6	3
1	2	46	K9	5-1	S-10	2
5	4	44	K13	4-11	S-8	29
4	6	61	L2	6-4	T-7	22
8	5	5	L4	1-5	Q-5	58
6	6	62	L6	6-5	T-8	43
3	3	47	L8	5-2	S-11	15
6	4	48	L10	5-3	S-12	41
8	6	6	L12	1-6	Q-6	59
4	3	45	L14	4-12	S-9	19
2	6	63	M3	6-6	T-9	10
5	8	64	M5	6-7	T-10	33
5	5	50	M11	5-5	S-14	30
2	3	51	M13	5-6	S-15	7
7	6	66	N4	6-9	T-12	51
8	7	7	N6	1-7	Q-7	60
7	5	52	N8	5-7	S-16	50
8	8	8	N10	1-8	Q-8	61
7	4	53	N12	5-8	S-17	49
2	5	67	O5	6-10	T-13	9
5	7	68	O7	6-11	T-14	32
5	6	54	O9	5-9	S-18	31
2	4	55	O11	5-10	T-1	8
4	5	69	P6	6-12	T-15	21
6	5	56	P8	5-11	T-2	42
4	4	57	P10	5-12	T-3	20

CONTROL ROD DRIVE PATCHING REFERENCE TABLE FOR CYCLE 13

CONTROL ROD DRIVE PATCHING REFERENCE TABLE FOR CYCLE 13

GROUP	ROD	MECH NO	CORE LOC	RPI AMP LOC\ XFER MOD CAB POS	API AMP IN SL3	CTRM PI LOC NO
1	1	33	G9	3-12	R-15	1
1	2	46	K9	5-1	S-10	2
1	3	60	K7	6-3	T-6	3
1	4	18	G7	2-9	Q-18	4
2	1	27	C11	3-6	R-9	5
2	2	36	E13	4-3	R-18	6
2	3	51	M13	5-6	S-15	7
2	4	55	O11	5-10	T-1	8
2	5	67	O5	6-10	T-13	9
2	6	63	M3	6-6	T-9	10
2	7	12	E3	2-3	Q-12	11
2	8	10	C5	2-1	Q-10	12
3	1	31	F8	3-10	R-13	13
3	2	40	H10	4-7	S-4	14
3	3	47	L8	5-2	S-11	15
3	4	21	H6	2-12	R-3	16
4	1	24	B10	3-3	R-6	17
4	2	37	F14	4-4	S-1	18
4	3	45	L14	4-12	S-9	19
4	4	57	P10	5-12	T-3	20
4	5	69	P6	6-12	T-15	21
4	6	61	L2	6-4	T-7	22
4	7	14	F2	2-5	Q-14	23
4	8	22	B6	3-1	R-4	24
4	9	9	H8	1-9	Q-9	25
5	1	26	C9	3-5	R-8	26
5	2	35	E11	4-2	R-17	27
5	3	39	G13	4-6	S-3	28
5	4	44	K13	4-11	S-8	29
5	5	50	M11	5-5	S-14	30
5	6	54	O9	5-9	S-18	31
5	7	68	O7	6-11	T-14	32
5	8	64	M5	6-7	T-10	33
5	9	58	K3	6-1	T-4	34
5	10	16	G3	2-7	Q-16	35
5	11	13	E5	2-4	Q-13	36
5	12	25	C7	3-4	R-7	37
6	1	23	B8	3-2	R-5	38
6	2	32	F10	3-11	R-14	39
6	3	42	H14	4-9	S-6	40
6	4	48	L10	5-3	S-12	41
6	5	56	P8	5-11	T-2	42
6	6	62	L6	6-5	T-8	43
6	7	19	H2	2-10	R-1	44
6	8	15	F6	2-6	Q-15	45
7	1	28	D8	3-7	R-10	46
7	2	34	D12	4-1	R-16	47
7	3	41	H12	4-8	S-5	48
7	4	53	N12	5-8	S-17	49
7	5	52	N8	5-7	S-16	50
7	6	66	N4	6-9	T-12	51
7	7	20	H4	2-11	R-2	52
7	8	11	D4	2-2	Q-11	53
8	1	1	D6	1-1	Q-1	54
8	2	2	D10	1-2	Q-2	55
8	3	3	F4	1-3	Q-3	56
8	4	4	F12	1-4	Q-4	57
8	5	5	L4	1-5	Q-5	58
8	6	6	L12	1-6	Q-6	59
8	7	7	N6	1-7	Q-7	60
8	8	8	N10	1-8	Q-8	61

PREPARED BY: _____ APPROVED BY: _____

SORT BY MECH NO.

GROUP	ROD	MECH NO	CORE LOC	RPI AMP LOC\ XFER MOD CAB POS	API AMP IN SL3	CTRM PI LOC NO
8	1	1	D6	1-1	Q-1	54
8	2	2	D10	1-2	Q-2	55
8	3	3	F4	1-3	Q-3	56
8	4	4	F12	1-4	Q-4	57
8	5	5	L4	1-5	Q-5	58
8	6	6	L12	1-6	Q-6	59
8	7	7	N6	1-7	Q-7	60
8	8	8	N10	1-8	Q-8	61
4	9	9	H8	1-9	Q-9	25
2	8	10	C5	2-1	Q-10	12
7	8	11	D4	2-2	Q-11	53
2	7	12	E3	2-3	Q-12	11
5	11	13	E5	2-4	Q-13	36
4	7	14	F2	2-5	Q-14	23
6	8	15	F6	2-6	Q-15	45
5	10	16	G3	2-7	Q-16	35
1	4	18	G7	2-9	Q-18	4
6	7	19	H2	2-10	R-1	44
7	7	20	H4	2-11	R-2	52
3	4	21	H6	2-12	R-3	16
4	8	22	B6	3-1	R-4	24
6	1	23	B8	3-2	R-5	38
4	1	24	B10	3-3	R-6	17
5	12	25	C7	3-4	R-7	37
5	1	26	C9	3-5	R-8	26
2	1	27	C11	3-6	R-9	5
7	1	28	D8	3-7	R-10	46
3	1	31	F8	3-10	R-13	13
6	2	32	F10	3-11	R-14	39
1	1	33	G9	3-12	R-15	1
7	2	34	D12	4-1	R-16	47
5	2	35	E11	4-2	R-17	27
2	2	36	E13	4-3	R-18	6
4	2	37	F14	4-4	S-1	18
5	3	39	G13	4-6	S-3	28
3	2	40	H10	4-7	S-4	14
7	3	41	H12	4-8	S-5	48
6	3	42	H14	4-9	S-6	40
5	4	44	K13	4-11	S-8	29
4	3	45	L14	4-12	S-9	19
1	2	46	K9	5-1	S-10	2
3	3	47	L8	5-2	S-11	15
6	4	48	L10	5-3	S-12	41
5	5	50	M11	5-5	S-14	30
2	3	51	M13	5-6	S-15	7
7	5	52	N8	5-7	S-16	50
7	4	53	N12	5-8	S-17	49
5	6	54	O9	5-9	S-18	31
2	4	55	O11	5-10	T-1	8
6	5	56	P8	5-11	T-2	42
4	4	57	P10	5-12	T-3	20
5	9	58	K3	6-1	T-4	34
1	3	60	K7	6-3	T-6	3
4	6	61	L2	6-4	T-7	22
6	6	62	L6	6-5	T-8	43
2	6	63	M3	6-6	T-9	10
5	8	64	M5	6-7	T-10	33
7	6	66	N4	6-9	T-12	51
2	5	67	O5	6-10	T-13	9
5	7	68	O7	6-11	T-14	32
4	5	69	P6	6-12	T-15	21