CONDITION REPORT
ED 8342-1

NO. 2000 - 1210

PAGE 1 OF

INITIATOR

EVENT DATE	EVENT TIME	DISCOVERY DATE	DISCOVERY TIME	REFERENCE DOCUMENTS/ASSET NUMBER
NA	NA	4/27/00	~0300	

CONDITION DESCRIPTION

During installation of the control rod drive assembly at location D-10 on the reactor head, it was discovered that the top of the motor tube for this drive was out of line with the surrounding motor tubes.

The nozzle this motor tube is attached to was machined this outage to remove pitting identified during maintenance. Based on as left dimensions from the machining work, it is not thought that this contributed significantly to this tilt.

This condition appears to be due to the nozzle that this drive is attached to being slightly out of plumb. It is felt that this condition has existed since original construction.

☐ CONTINUED

NAME (Print)	SIGNATURE	DATE	ORGANIZATION	TELEPHONE NO.	MAIL LOCATION
A. S. Wilson	[signature]	4/28/00	Maint	7741	1052

SUPERVISOR

PLANT OPERATIONS REVIEW ☒ YES ☐ NO

COMMENTS

This drive is an APSR that has operated properly.

RECOMMENDED CATEGORY
Routine

☐ CONTINUED

NAME (Print)	SIGNATURE	DATE	ORGANIZATION	TELEPHONE NO.	MAIL LOCATION
A. S. Wilson	[signature]	4/28/00	Maint	7741	1052

PLANT OPERATIONS

REPORTABILITY ☐ 1 HR ☐ 4 HR ☐ 24 HR ☒ N/A

OPERABILITY ☐ YES ☐ NO ☒ N/A

IMMEDIATE ACTIONS TAKEN OR NEEDED / COMMENTS

This does not appear to affect operation of the affected APSR. Evaluation to determine the affect on this drive is in progress. This evaluation needs to be completed prior to entry into Mode 4, thus this is a Mode 4 restraint. Operability checked N/A since not required in this mode.

☐ CONTINUED

NAME (Print)	SIGNATURE	DATE	TIME
RANDY PATRICK	[signature]	4/28/00	1602

CONDITION REPORT
ED 8342A-1

NO. 2000-1210

OWNER	CATEGORY	DUE DATE	OPERATING EXPERIENCE REPORT
~~SYME~~ DEMS	Routine	7/28/00	☐ EVALUATE ☐ INITIATE

☐ CATPR

CAUSE DETERMINATION: ☒ APPARENT ☐ ROOT CAUSE ☐ MULTI-DISC. ROOT CAUSE

☐ ERB

☐ EXPERIENCE REVIEW ☐ EXTENT OF CONDITION ☐ POTENTIAL MRFF ☐ OTHER REVIEW REQUIRED

MRC COMMENTS

Mode 4 Restraint

☐ CONTINUED

SUPERVISOR ASSIGNED DUE DATE:

10 CFR PART 21? ☒ NO ☐ YES — IF YES, DATE

SYSTEM CAPABLE OF PERFORMING SPECIFIED FUNCTION? ☒ YES ☐ NO ☐ N/A

ANI REVIEW REQUIRED? ☐ NO ☒ YES IF YES, ANI SIGNATURE REQUIRED	SIGNATURE Thomas G Laps ANII	DATE 5/2/00
PREPARER (Print) P. K. GOYAL	SIGNATURE [signature]	DATE 5/2/00
SUPERVISOR APPROVAL (Print) THEO Swim	SIGNATURE [signature] T. Swim	DATE 5-2-00
MANAGER APPROVAL (Print) ☒ N/A	SIGNATURE	DATE
DIRECTOR APPROVAL (Print) ☒ N/A	SIGNATURE	DATE
VICE PRESIDENT APPROVAL (Print) ☒ N/A	SIGNATURE	DATE
SRB APPROVAL (Print) ☐ OE REQUIRED ☒ N/A	SIGNATURE	DATE
ERB APPROVAL (Print) ☒ N/A	SIGNATURE	DATE

D-10

FA Currence
4-28-00

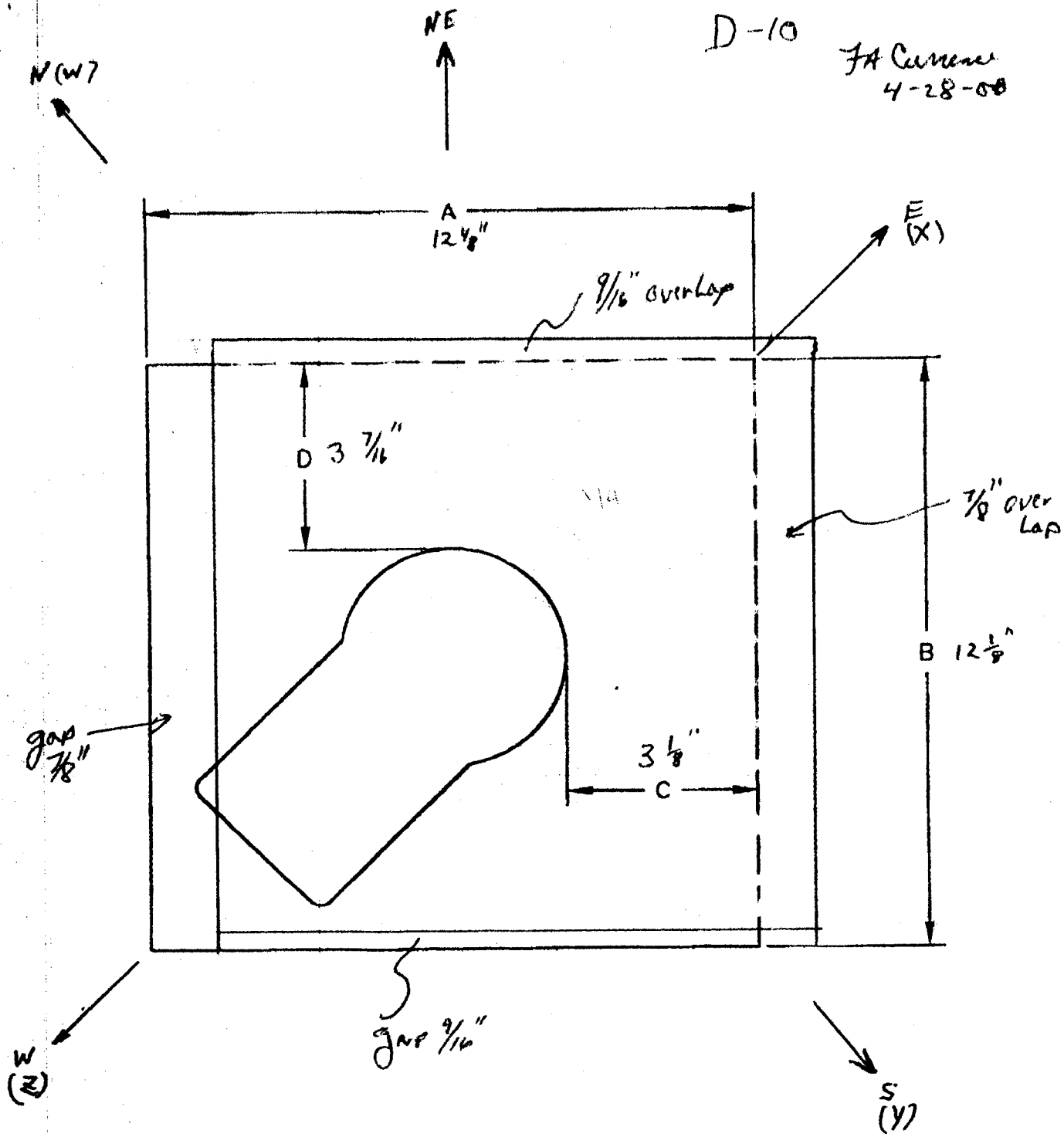

CR 2000 - 1210
ATTACHMENT 1
PAGE 1 OF 6

FRAMATOME TECHNOLOGIES

WORK INSTRUCTION WI-31
CONDITION REPORT

CR# 6002865 REV # 00 PAGE 1 OF 5

SECTION 1 INITIATION

CONTRACT 1210833 CUSTOMER/SITE/UNIT: Davis Besse

TECHNICAL DOCUMENT#: 03-1221681-03 SEQUENCE/STEP #:

DESCRIPTION OF CONDITION:

During the re-assembly of CRDM D-10 (APSR), it was noticed that the motortube was leaning. It appears to be leaning approximately 1 3/4". The drive was pulled up and reset to try and eliminate the lean. D-10 was then torque and loaded using the BoltMaster. It still has a lean of 1 3/4". We have checked the flange with a 5 mil feeler gage and the gage will not go inbetween the flanges.

INITIATOR: Fred Currence (NAME) DATE/TIME: 4/27/00

PRIORITY 1 2 3

SENT TO: Ron Pillow (NAME) REQUESTED COMPLETION DATE: 4/27/00

FOR TRENDING/TRACKING ONLY – NO RESPONSE REQUIRED

SECTION 2 IMPLICATION RESOLUTION/DISPOSITION/PREVENTATIVE ACTION

IMPLICATION:: SAFETY-RELATED ASME CODE NON SAFETY-RELATED NON QA PROGRAM

IMPROVEMENT OTHER:

TYPE: CUSTOMER "AS FOUND" INTERNAL ITEM OTHER:

NOTIFICATION/RECOMMENDED RESOLUTION/DISPOSITION:

See attachment 1

CAUSE CODE: MISC - AS-FOUND CONDITION

PREVENTATIVE ACTION: REQUIRED NONE REQUIRED

APPLICABLE TO OTHER CONTRACTS: YES NO

RESOLUTION:

AFFECTED ORGANIZATION: PCS SCHEDULED COMPLETION DATE: 4-27-00

RESPONSIBLE INDIVIDUAL/ENGINEER: RC Pillow (SIGNATURE) RC PILLOW (NAME) 4/27/00 (DATE)

ACTION REQUIRED BY: CUSTOMER QA OTHER

CR 2000-1210
ATTACHMENT 1
PAGE 2 OF 6

FRAMATOME TECHNOLOGIES

WORK INSTRUCTION WI-31
CONDITION REPORT CONTINUATION

CR# REV # PAGE 2 OF 5

SECTION 3 APPROVAL/ACKNOWLEDGEMENT/CONCURRENCE

	(SIGNATURE)	(NAME)	(DATE)
REVIEWER:	HWBehnke	HW BEHNKE	4-27-00
UNIT MANAGER:	J W Mitchem	J.W. Mitchem	4/27/00
CUSTOMER (if required) APPROVAL ACKNOWLEDGEMENT	[illegible]	A.S. WILSON	4/27/00
QA Approval (if required)			
OTHER (if required) APPROVAL ACKNOWLEDGEMENT CONCURRENCE	(SIGNATURE)	(NAME/TITLE/ORGANIZATION)	(DATE)

SECTION 4 ENGINEERING EVALUATION/NOTIFICATION/ACTIONS COMPLETED

THE ACTIONS SPECIFIED IN SECTION 2 HAVE BEEN COMPLETED.

	(SIGNATURE)	(NAME)	(DATE)
VERIFIED BY:			
QA (OTHER) if required:			

SECTION 5 PREVENTATIVE ACTION COMPLETION

THE PREVENTATIVE ACTIONS SPECIFIED IN SECTION 2 HAVE BEEN COMPLETED. THIS CR IS CLOSED.

	(SIGNATURE)	(NAME)	(DATE)
VERIFIED BY:			
QA (OTHER) if required:			

DISTRIBUTION

Project Engineer	Records Management -- T5 18	Other
Unit Technical Manager	QA Manager Performance & Analysis	Specify

CR 2000-1210
ATTACHMENT 1
PAGE 3 OF 6

Attachment 1 to CR 6002865 Rev 00 April 27, 2000

Disposition

FTI component engineering assembled a list of required inspections for the site to perform so an assessment of the cause of the reported condition could be made. These inspection steps and the results of the inspections are attached (attachments 2&3).

Potential causes that were investigated were:

1. The field machining was not performed perpendicular to the centerline of the existing CRDM nozzle.

2. The parts were not properly assembled; i.e., debris or other physical obstruction(s) existed that prevented proper mating of the assembled joint thus causing the motor tube to tilt.

3. The motor tube is bent or otherwise damaged.

4. The condition existed previously and went unnoticed.

In addition, FTI personnel were interviewed to determine if someone recalled the off center condition of this particular drive in previous work activities performed. Paul Lynn recalled he had noticed this condition in the past, but he had no knowledge of any reports or inspection data being generated.

Recommended disposition

Based on inspections performed and data taken (attachments 2&3), component engineering has determined that the flange joint was assembled properly and with no interference. It has also been determined the reported condition existed prior to the repair activity being performed and that the drive assembly should be reinstalled as-is with no further repair work being performed. The CRDM should be reassembled using new lot 27 gaskets in accordance with the existing procedure.

After the drive has been assembled, the location of the motor tube at the top shall be determined with respect to the seismic plate. A new tie plate will be designed and fabricated so the motor tube can be secured at the top end without having to move it from its as-installed location. The seismic plate design will target zero cold springing of the motor tube.

CR 2000-1210
ATTACHMENT 1
PAGE 4 OF 6

PAGE 4 OF 5

ATTACHMENT 2 TO CR 6002865, REV 00

Motor Tube

1. Measure and record diameter and length of index pin (Design nominal dimensions are ½" diameter x 3/8" long). 1/2" x 3/8" Lg

2. Inspect and note any burrs/upset metal on alignment pin. No burrs.

3. If burrs/upset metal present, remove and reinspect. N/A

4. Measure and record distance from motor tube flange to bottom of adapter ring. (Design dimension is later).

5. Inspect and note any burrs or upset metal on adapter ring O.D. No burrs

6. Inspect and note motor tube flange face for indentations, upset metal, raised metal, etc. Location of any abnormalities should be noted relative to the index pin and bolt holes. None noted.

7. With motor tube hanging, look for any obvious bowing of motor tube. Direction of any bowing should be noted relative to alignment pin hole.

None observed.

CR 2000-1210
ATTACHMENT 1
PAGE 5 OF 6

ATTACHMENT 3 TO CR 6002865, REV00

CRDM Nozzle

1. Check to see if old gaskets are in groove and whether there is debris on flange. Gaskets are in groove and no debris.
2. Inspect index pin hole for burrs on entrance and debris in bottom. Record orientation of alignment pin hole relative to axes. No burrs, removed one small piece of debris.
3. Gage hole to verify diameter and depth (.510/.515 dia. X .390 lg.). 33/64 bit inserted 7.390
4. Remove gaskets and inspect for abnormal crushing (sign of pinching between flange). Good - see gasket crush dimensions below
5. Clean flange. done
6. Check flange face and gasket grooves for indentations (indication that gasket may have been out of grooves). Gaskets were properly in grooves - appeared normal to CRDM crew. No indentations.
7. Using existing impression of nozzle after final machining, check gasket groove dimensions, depth, diameters, and width. All dimensions are to be reported relative to alignment pin hole.

4) Cont'd: gasket crush measurments

	0	90	180	270
Inner	110	111	111	110
Outer	114	114	115	115

7) * Ref land: only one measurable piece, between 0 + 90, depth ≈ .130

* Gasket groove widths: .315 - .317
* Inner groove dia (0-180) = 5.990
* Groove depths: (measured between grooves)

0°: .097 180°: .099

90°: .098 270°: .099

* Best - effort measurements.

CR 2000-1210
ATTACHMENT 1
PAGE 6 OF 6

CONDITION REPORT ED 8342B	NO. 2000-1210	Page of

Problem statement :

During the installation of the control drive assembly at location D-10 on the reactor head, it was discovered that the top of the motor tube for this drive was out of plumb. The installed tube appears to be leaning approximately 1 3/4 ".

Apparent Cause:

The nozzle this tube is attached was machined during this outage to remove pitting identified during the maintenance. The field machining may have contributed slightly to this situation. Based on the as left dimensions from the machining work, it is not thought that this contributed significantly. It is possible that this condition existed previously and went unnoticed as indicated by FTI personnel.

Action:

Based on the FTI recommendation that bending the top of the tube back toward the center imposes loads which could contribute to premature joint leakage. It was decided to leave the D-10 in as installed condition. See attached FTI justification of operability of this CRDM in a deflected position.. ~~(NOTE: We are waiting for this FTI evaluation)~~

[signature] 5/2/00

Seismic Tie Plate Evaluation:

Condition Description:

During the installation of the control rod drive assembly at location D-10 on the reactor head, it was discovered that the top of the motor tube for this drive was out of line with the surrounding motor tube.

Condition impact on seismic tie plate:

Due to the as-found condition of the motor tube the seismic tie plate will not fit correctly. A new tie plate has been fabricated by Framatome Technologies. Framatome Technologies Document No. 32-5008268-00, Revision 0 (ACT 00-0306) provides the required seismic evaluation of the tie plate.

ERR 60-0003-109 permits the installation of a replacement seismic tie plate for the D-10 location.

T.B. Ridlon 5/1/00

T.B. Ridlon x 7361

☐ Continued

22216-8 (2/2000)

FRAMATOME TECHNOLOGIES

WORK INSTRUCTION WI-31
CONDITION REPORT

[redacted] 5002865 [redacted] 01 PAGE 1 OF 2

[redacted]

CONTRACT 1210833 CUSTOMER/SITE/UNIT: Davis Besse

TECHNICAL DOCUMENT#: 03-1221681-03 SEQUENCE/STEP #:

DESCRIPTION OF CONDITION:

REV 01- The recommend disposition for rev 00 was to design and fabricate a new seismic plate. This revison is being made to record the documents associated with the design, fabricatrion and justification of the new seismic plate.

Rev 00- During the re-assembly of CRDM D-10 (APSR), it was noticed that the motortube was leaning. It appears to be leaning approximately 1 3/4". The drive was pulled up and reset to try and eliminate the lean. D-10 was then torque and loaded using the BoltMaster. It still has a lean of 1 3/4". We have checked the flange with a 5 mil feeler gage and the gage will not go inbetween the flanges.

INITIATOR: Fred Snow (NAME) DATE/TIME: 5/1/00

PRIORITY ☒ 1 ☐ 2 ☐ 3

SENT TO: Ron Pillow (NAME) REQUESTED COMPLETION DATE: 5/1/00

☐ FOR TRENDING/TRACKING ONLY – NO RESPONSE REQUIRED

SECTION 2 IMPLICATION RESOLUTION DISPOSITION PREVENTATIVE ACTION

IMPLICATION:: ☒ SAFETY-RELATED ☐ ASME CODE ☐ NON SAFETY-RELATED ☐ NON QA PROGRAM

☐ IMPROVEMENT ☐ OTHER:

TYPE: ☒ CUSTOMER "AS FOUND" ☐ INTERNAL ITEM ☐ OTHER:

NOTIFICATION/RECOMMENDED RESOLUTION/DISPOSITION:

The following documents were created in the design, fabrication and justification of the new seismic plate.
Functional evaluation document is 51-5006269
Structural evaluation document is 32-5006268
New Seismic Plate drawing is 02-7600124D
QA Data Package for new Seismic Plate is 23-5006274

CAUSE CODE: See rev 00

PREVENTATIVE ACTION: ☐ REQUIRED ☒ NONE REQUIRED

NA

APPLICABLE TO OTHER CONTRACTS: ☐ YES ☒ NO

RESOLUTION:

NA

AFFECTED ORGANIZATION: PCS SCHEDULED COMPLETION DATE: 5/1/00

RESPONSIBLE INDIVIDUAL/ENGINEER: RC Pillow (SIGNATURE) RC Pillow (NAME) 5/1/00 (DATE)

ACTION REQUIRED BY: ☒ CUSTOMER ☐ QA ☐ OTHER

22218-3 (2/2000)

FRAMATOME TECHNOLOGIES

WORK INSTRUCTION WI-31
CONDITION REPORT CONTINUATION

6002865 | 01 | PAGE 2 OF 2

REVIEWER:	H Behnke (SIGNATURE)	H W BEHNKE (NAME)	5/1/00 (DATE)
UNIT MANAGER:	J.W. Mitchem (SIGNATURE)	J.W. Mitchem (NAME)	5/1/00 (DATE)
CUSTOMER (If required) ☒ APPROVAL ☐ ACKNOWLEDGEMENT	R.K. Goyal (SIGNATURE)	R.K. GOYAL (NAME)	5/1/00 (DATE)
QA Approval (If required)	NA (SIGNATURE)	(NAME)	(DATE)
OTHER (If required) ☐ APPROVAL ☐ ACKNOWLEDGEMENT ☐ CONCURRENCE	NA (SIGNATURE)	(NAME/TITLE/ORGANIZATION)	(DATE)

SECTION 4 ENGINEERING EVALUATION/IMPLEMENTATION/ACTIONS COMPLETED

THE ACTIONS SPECIFIED IN SECTION 2 HAVE BEEN COMPLETED.

VERIFIED BY:	(SIGNATURE)	(NAME)	(DATE)
QA (OTHER) If required:	NA (SIGNATURE)	(NAME)	(DATE)

SECTION 5 PREVENTATIVE ACTION COMPLETION

THE PREVENTATIVE ACTIONS SPECIFIED IN SECTION 2 HAVE BEEN COMPLETED. THIS CR IS CLOSED.

VERIFIED BY:	(SIGNATURE)	(NAME)	(DATE)
QA (OTHER) If required:	NA (SIGNATURE)	(NAME)	(DATE)

DISTRIBUTION

Project Engineer	Records Management - - T5.16	Other
FL Snow		
Unit Technical Manager	QA Manager Performance & Analysis	Specify
JW Mitchem		

20440-7 (12/96)

FRAMATOME TECHNOLOGIES

ENGINEERING INFORMATION RECORD

Document Identifier 51 - 5008269-00

Title D-10 Motor Tube Position Disposition

PREPARED BY:		REVIEWED BY:	
Name HW Behnke		Name RC Pillow	
Signature HBehnke	Date 5-01-00	Signature R.C. Pillow	Date 5/1/00

Technical Manager Statement: Initials fuss

Reviewer is Independent.

Remarks:

1.0 Background

After completing the re-facing of the D-10 control nozzle flange face at Davis Besse and reinstalling the motor tube it was observed that the top of the motor tube was out of position with respect to the surrounding drives. The initial reported deviation was an identification that the D10 drive was out of position 1 ¾ inch normal to the row and between .66 and .39 inches along the row. This latter uncertainty is derived by summing the dimensions for distance to adjacent drives and finding that the total is within the drawing spacing. The tie-plates were not on at the time of the measurement therefore a part of the position deviation is due to the adjacent drives not being perfect. The nozzle flange was being refaced to remove damage that had been induced by a leakage problem on this drive.

2.0 Issue

Verify the effect of the re-facing of the flange on the motor tube position and confirm the existing configuration is acceptable.

3.0 Conclusion

The machining of the flange face could have introduced a relative movement at the end of the motor tube of .26 inches. The final motor tube configuration is intended to be off location by approximately one inch. The final motor tube condition using the modified tie-plate has no effect on the operability of the APSR drive line and should improve the sealing ability of the flange joint.

4.0 Basis of resolution

The end of the motor tube being off location generated the concern that the flange had not been assembled properly. The parallel requirement for the flange facing could have been deviated or a foreign object could be holding the flange surfaces apart. A corrective action plan was generated. This plan included verification that the flange was properly seated and a re-evaluation of the final flange face dimensions. The flange was verified to be in line to line contact by the inability to insert a 5 mil feeler gauge between the flanges (this was an approximate test since it was being done remotely by pole handling). A force/displacement test was performed to verify the drive stiffness was as expected This test indicated the drive stiffness was acceptable. The flange measurement data after facing indicated that the parallelism of the vessel flange could have been adjusted by .014 inch over the flange diameter of 11.5 inches. This change would have resulted in a movement of 210 x .014/11.5= .26 inches. The motor tube height is essentially 210 inches from the flange.

Regardless of the above data, a decision was made to detension the flange and perform further investigations. The flange faces looked normal and there was no observance of local damage or debris. The index pin hole in the vessel flange was verified to have sufficient diameter and depth to accept the indexing pin on the motor tube. The final gasket dimensions indicated uniformity in thickness indicating that the flanges had been essentially in line to line contact. The motor tube appeared straight but was not dimensionally verified. Discussions with a site crew member, Paul Linn, indicated that there was evidence that the drive was off location prior to machining. This was observed during the free path check that all obstructions were removed prior to machining. The end of the drive had to be moved manually a sufficient amount to verify the free path but the condition was not believed to be atypical. It was also necessary to spread the service structure support beams slightly to allow for the machining tool to enter. This spreading could result in a minor change of the tie-plate to motor tube position but it would not effect the relative position of the motor tubes with respect to each other with tie plates not installed.

A new set of gaskets was installed and the flange was re-assembled in accordance with the site procedure. Again the relationship of the motor tube end and surrounding drives was determined. The new dimensions indicated that the motor tube end was at about the same location therefore it was concluded that the flanges were assembled properly at the metal to metal condition and some other anomaly was causing the deviation. No single factor is believed to be responsible for the deviation. The original as-builts on the vessel flanges verifies that they are in tolerance. The as installed configuration had a parallelism requirement of .0055 per flange which would be .1 inch maximum at the end of the motor tube or possibly .2 relative between motor tubes. As mentioned earlier the flange facing could have resulted in an additional .26 inch if the deviation were exactly in the same direction. Therefore the straightness of the motor tube must be contributing to the out of location deviation.

The APSR drive mechanism has more tolerance to out of position anomalies than the shim drives. The APSR's do not trip therefore they can tolerate more friction in the drive line paths. The APSR's are driven to their required position by the roller nut/stator mechanism which has capabilities of at least 3 times the drive line weight. This deviation is not considered a safety issue since any anomalies in performance of the APSR drive would be identified at the time of occurrence and corrective action could be taken before a change in reactor conditions occurs. The motor tube end being out of position could result in difficulties in coupling, increased force to move drive line in the axial direction and increased moment loading on the flange which contribute to leaking at the flange.

Bow in the motor tube would have little effect on capabilities to couple the leadscrew to the control rod spider but if the CRDM nozzle and flange face were significantly out of parallel the leadscrew tip could be forced off the normal free path line. The motor tube internal restrictions will essentially hold the leadscrew in the line of the motor tube centerline. The leadscrew support tube and the control rod guide column in the reactor vessel internals limit the amount that the tip of the leadscrew can actually vary from the required path therefore considerable friction forces would develop in the coupling process if the leadscrew was being forced into position. The subject APSR has been confirmed to couple per the procedure therefore significant interference was not present. This removes one of the possible trouble areas and supports the theory that the out of position condition is not predominantly the RV nozzle and flange.

The possibility that the drive will bind when axial travel is initiated has not been completely eliminated but the indications to date are positive that this is not a problem. The leadscrew was driven in from the full out position to the couple position with no anomalies. The drive was then coupled and driven out approximately 2 inches with no anomalies. If there was significant resistance in the drive line path, difficulties during coupling would have been expected and once coupled the force to lift the leadscrew plus control component would have been excessive. As mentioned earlier the stator/roller nut mechanism can lift at least 3 times the drive line weight and friction forces of this magnitude (greater than 200 pounds) should have been detected during the coupling process.

The last issue of bending at the flange has been resolved by compromise. It had been intended to secure the motor tube drive at the free standing location to minimize flange moment and help to minimize binding of the leadscrew with the control rod mechanism internal components. During the re-assembly process it was identified that the stator power cable conduit and the power cable hook-up required that the end of the motor tube be moved toward the center of the seismic plate to provide clearance for the conduit and to allow hook-up of the cable without altering cable routing. A new seismic tie-plate is being installed which will hold the end of the motor tube off the center location by approximately 1 inch. The as found condition indicates that the motor tube was off location by approximately 2 inches. Therefore the interference and the resulting moment at the flange has been cut by one half. In addition a motor tube off location by 1 inch has a conservative pressure correction of under 300 psi. This correction plus the operating pressure is below the qualified sealing pressure of the joint. It should be noted that the original configuration may have been twice this value and would have been a factor for possible leakage of this joint.

006737.001667

DESIGN VERIFICATION CONTROL
EO 9778-6

DOCUMENT NO. CR 2000-1210

DESIGN DESCRIPTION / TITLE
CRDM motor tube at D-10 location on the reactor head is out of plumb
The resolution is to use-as-is.

REFERENCES

(SPECIFICATION NO., DRAWING NO., FCR/MOD NO., ETC.)
CR 2000-1210, Work Instruction WI-31 condition Report # 6002865

DESIGN ORIGINATOR FTI ☒ Q ☐ AQ ☐ NQ

DESIGN VERIFIER AND TITLE (ASSIGNED BY ENGINEERING MANAGER / SUPERVISOR)
P.K. GOYAL

DESIGN VERIFICATION METHOD USED

(PLEASE CHECK ONE)

☐ DESIGN REVIEW
(PER DESIGN VERIFICATION CHECKLIST)

☒ * ALTERNATE CALCULATIONS

☐ * QUALIFICATION TESTING

* BOXES CHECKED MUST HAVE SUPPORTING DOCUMENTATION ATTACHED

~~ERRORS / DEFICIENCIES IDENTIFIED~~
The referenced CR documents a condition addressed by FTI's engineering organization under their Nonconformance Reporting Program (CR # 6002865) which operates under the purview of FTI's 10 CFR Appendix B Quality Assurance Program. This Design Verification Control form is being completed to comply DB's site procedures when "use-as-is" dispositions are proposed. Though Design Basis Engineering did not complete a

~~SUGGESTED CORRECTIVE ACTION~~
DV checklist for this condition, concurrence of FTI's evaluation and corrective action as documented under the FTI CR process has been reviewed and accepted.

SUBMITTED BY	DATE	ACKNOWLEDGED BY	DATE
DESIGN VERIFIER PKGoyal	5/2/00	DESIGN ORIGINATOR N/A	
CORRECTIVE ACTION COMPLETED BY	**DATE**	**APPROVED BY**	**DATE**
N/A		ENGINEERING MANAGER / SUPERVISOR T. Swm	5-2-2000

SAFETY REVIEW
SD7519-7-9

PREPARER	EXTENSION	MAIL STOP	DEPARTMENT	DATE
Jon G. Hook	8249	3210	DEMS	4-1-2000

DOCUMENT NO.	TITLE
CR 2000-1210	APSR for D-10 is slightly out of plumb.

Change to Technical Specifications or BASES?

☐ YES: Specifications or BASES affected

X NO: Provide justification and list Technical Specifications and BASES reviewed:

Reviewed Sections 2.1.1, 2.1.2, 3 / 4.1.1, ¾.1.3 and 5.0.

Although the Tech Spec and Bases identify Axial Power Shaping Rods (APSR), the amount of plumbness is not identified in the Tech Spec or Bases.. The affected APSR is capable of performing its function.

Therefore, there is no change to the Tech Spec. or Bases

☐ Continued

Change in the Facility as described in the USAR?

☐ YES: USAR sections affected

X NO: Provide justification and list the USAR sections reviewed:

The plumbness of the APSR is not identified in any sections of the USAR, nor is the function of the ASPR affected by this minor deviation. Therefore, there is no change to the facility as described in the USAR.

See attached sheet for the items reviewed.

☐ Continued

Change to Procedures as described in the USAR?

☐ YES: USAR sections affected

X NO: Provide justification and list the USAR sections reviewed:

The plumbness of the APSR are not identified in any procedures, therefore, there is no change to procedures as described in the USAR.

☐ Continued

Test or Experiment not described in the USAR?

☐ YES:

X NO: Provide justification and list the USAR sections reviewed:

The out of plumb APSR is not a test or an experiment

☐ Continued

If any answer is YES, prepare or reference applicable Safety Evaluation, SE.

Write Docketed Letter (DL) or Safety Evaluation (SE) number here: N/A

PREPARER	DATE	QUALIFIED REVIEWER	DATE
Jon G. Hook	5-1-2000	Paul N Carr	5/2/00

3D-5 REV 9 7/89 \ 3D.1.8 CRITERION 12 - SUPPRESSION OF REAC...

4.2-18 REV 21 11/98 \ 4.2.1.5.5 Control and Axial Power Shaping Asse...

4.2-35 REV 7 7/88

4.2-38 REV 14 7/91 \ 4.2.3.4 Test and Inspections

4.2-38 REV 14 7/91 \ 4.2.3.4 Test and Inspections

4.2-38 REV 14 7/91 \ 4.2.3.4 Test and Inspections

4.2-47 REV 18 11/93

4.3-16 REV 19 5/95 \ 4.3.4.3 Power Maldistributions

4.3-16 REV 19 5/95 \ 4.3.4.3 Power Maldistributions

UNIT 1, CYCLE 12 - RELOAD REPORT \ CONTENTS

UNIT 1, CYCLE 12 - RELOAD REPORT \ CONTENTS

UNIT 1, CYCLE 12 - RELOAD REPORT \ 2. OPERATING HISTORY

UNIT 1, CYCLE 12 - RELOAD REPORT \ 3. GENERAL DESCRIPTION \...

UNIT 1, CYCLE 12 - RELOAD REPORT \ 8. PROPOSED CORE OPER...

UNIT 1, CYCLE 12 - RELOAD REPORT \ 8. PROPOSED CORE OPER...

UNIT 1, CYCLE 12 - RELOAD REPORT \ CYCLE 12 RELOAD REPORT...

UNIT 1, CYCLE 12 - RELOAD REPORT \ CYCLE 12 RELOAD REPORT...

7.7-10 REV 20 12/96 \ 7.7.1.3.1 General

7.7-13 REV 21 11/98

14.4-113 REV 0 7/82

RECORD END SHEET
No. [illegible]

END OF RECORD