Entergy

Entergy Nuclear South
Entergy Operations, Inc.
17265 River Road
Killona, LA 70057
Tel 504 464 3178

Kevin T. Walsh
General Manager, Plant Operations
Waterford 3

W3F1-2005-0075

October 27, 2005

U.S. Nuclear Regulatory Commission
Attn: Document Control Desk
Washington, DC 20555

SUBJECT: License Amendment Request NPF-38-266
Remove Limitation to Perform Various Surveillances
Only During Shutdown
Waterford Steam Electric Station, Unit 3
Docket No. 50-382
License No. NPF-38

Dear Sir or Madam:

Pursuant to 10 CFR 50.90, Entergy Operations, Inc. (Entergy) hereby requests the following amendment for Waterford Steam Electric Station, Unit 3 (Waterford 3). Revisions to the Technical Specification (TS) Surveillance Requirements (SR) 4.5.2e (Safety Injection), 4.6.2.1d (Containment Spray), and 4.7.3b (Component Cooling Water/Auxiliary Component Cooling Water) are requested to remove the words "during shutdown." This will provide flexibility allowing components required to be tested by these SRs to be tested online. Additionally, a revision to delete TS SR 4.7.12.1c (Essential Services Chilled Water) is requested. A modification permanently separating the safety and non-safety portions of the Essential Services Chilled Water system has eliminated the need for automatic isolation valves and thus this SR.

The proposed change has been evaluated in accordance with 10 CFR 50.91(a)(1) using criteria in 10 CFR 50.92(c) and it has been determined that this change involves no significant hazards consideration. The bases for these determinations is included in the attached submittal.

The proposed change does not include any new commitments.

Entergy requests approval of the proposed amendment by 30 September 2006 in order to support the fall 2006 refueling outage. Once approved, the amendment shall be implemented within 60 days. Although this request is neither exigent nor emergency, your prompt review is requested.

A001

If you have any questions or require additional information, please contact D. Bryan Miller at 504-739-6692.

I declare under penalty of perjury that the foregoing is true and correct. Executed on October 27, 2005.

Sincerely,

KTW/DBM/cbh

Attachments:
1. Analysis of Proposed Technical Specification Change
2. Proposed Technical Specification Changes (mark-up)

cc: Dr. Bruce S. Mallett
U. S. Nuclear Regulatory Commission
Region IV
611 Ryan Plaza Drive, Suite 400
Arlington, TX 76011

NRC Senior Resident Inspector
Waterford 3
P.O. Box 822
Killona, LA 70066-0751

U.S. Nuclear Regulatory Commission
Attn: Mr. Nageswaran Kalyanam MS O-7D1
Washington, DC 20555-0001

Wise, Carter, Child & Caraway
Attn: J. Smith
P.O. Box 651
Jackson, MS 39205

Winston & Strawn
Attn: N.S. Reynolds
1700 K Street, NW
Washington, DC 20006-3817

Louisiana Department of Environmental Quality
Office of Environmental Compliance
Surveillance Division
P. O. Box 4312
Baton Rouge, LA 70821-4312

American Nuclear Insurers
Attn: Library
Town Center Suite 300S
29th S. Main Street
West Hartford, CT 06107-2445

Morgan, Lewis & Bockius LLP
ATTN: T.C. Poindexter
1111 Pennsylvania Avenue, NW
Washington, DC 20004

Attachment 1

W3F1-2005-0075

Analysis of Proposed Technical Specification Change

1.0 DESCRIPTION

This letter is a request to amend Operating License NPF-38 for Waterford Steam Electric Station, Unit 3 (Waterford 3).

The proposed changes will revise the Operating License to remove the words "during shutdown" from Technical Specification (TS) Surveillance Requirements (SR) 4.5.2e (Safety Injection), 4.6.2.1d (Containment Spray), and 4.7.3b (Component Cooling Water/Auxiliary Component Cooling Water). This will allow testing to be performed online. Additionally, a change to delete TS SR 4.7.12.1c (Essential Services Chilled Water) is requested as a result of a plant modification that eliminated the automatic isolation valves tested by this SR.

2.0 PROPOSED CHANGE

TS SR 4.5.2e currently states:

e. At least once per 18 months, **during shutdown,** by:
   1. Verifying that each automatic valve in the flow path actuates to its correct position on SIAS and RAS test signals.
   2. Verifying that each of the following pumps start automatically upon receipt of a safety injection actuation test signal:
      a. High pressure safety injection pump.
      b. Low pressure safety injection pump.
   3. Verifying that on a recirculation actuation test signal, the low pressure safety injection pumps stop, the safety injection system sump isolation valves open.

Proposed TS SR 4.5.2e will state:

e. At least once per 18 months by:
   1. Verifying that each automatic valve in the flow path actuates to its correct position on SIAS and RAS test signals.
   2. Verifying that each of the following pumps start automatically upon receipt of a safety injection actuation test signal:
      a. High pressure safety injection pump.
      b. Low pressure safety injection pump.
   3. Verifying that on a recirculation actuation test signal, the low pressure safety injection pumps stop, the safety injection system sump isolation valves open.

TS SR 4.6.2.1d currently states:

d. At least once per 18 months, **during shutdown,** by:
   1. Verifying that each automatic valve in the flow path actuates to its correct position on a CSAS test signal.
   2. Verifying that upon a recirculation actuation test signal, the safety injection system sump isolation valves open and that a recirculation mode flow path via an OPERABLE shutdown cooling heat exchanger is established.
   3. Verifying that each spray pump starts automatically on a CSAS test signal.

Proposed TS SR 4.6.2.1d will state:

d. At least once per 18 months by:
   1. Verifying that each automatic valve in the flow path actuates to its correct position on a CSAS test signal.

2. Verifying that upon a recirculation actuation test signal, the safety injection system sump isolation valves open and that a recirculation mode flow path via an OPERABLE shutdown cooling heat exchanger is established.
3. Verifying that each spray pump starts automatically on a CSAS test signal.

TS SR 4.7.3b currently states:

b. At least once per 18 months, **during shutdown,** by verifying that each automatic valve servicing safety-related equipment actuates to its correct position on SIAS and CSAS test signals.

Proposed TS SR 4.7.3b will state:

b. At least once per 18 months by verifying that each automatic valve servicing safety-related equipment actuates to its correct position on SIAS and CSAS test signals.

TS SR 4.7.12.1c currently states:

c. **At least once per 18 months during shutdown, by verifying that each automatic valve servicing safety-related equipment actuates to its correct position on a safety injection actuation test signal.**

Proposed TS SR 4.7.12.1c will state:

c. Deleted

In summary, TS SR 4.7.12.1c (Essential Services Chilled Water) is being deleted and the "during shutdown" limitation is being removed from TS SRs 4.5.2e (Safety Injection), 4.6.2.1d (Containment Spray), and 4.7.3b (Component Cooling Water/Auxiliary Component Cooling Water).

TS Bases changes are not planned in support of this License Amendment Request.

3.0 BACKGROUND

3.1 Safety Injection System

The safety injection system (SIS) is designed to provide core cooling in the unlikely event of a loss of coolant accident (LOCA). The SIS fluid must contain sufficient neutron absorbers to maintain the core subcritical for the duration of a LOCA. In addition, the SIS functions to inject borated water into the reactor coolant system (RCS) to add negative reactivity to the core in the unlikely event of a steam line rupture. Safety injection is also initiated in the event of a steam generator tube rupture or a control element assembly ejection incident. Additional information on the SIS can be found in Final Safety Analysis Report (FSAR) Section 6.3.

The SIS is automatically initiated upon the receipt of a safety injection actuation signal (SIAS). The contents of the reactor water storage pool (RWSP) are injected into the RCS by two sets of full capacity pumps. Each set contains one high-pressure safety injection (HPSI) pump and one low-pressure safety injection (LPSI) pump. Long-term core cooling is accomplished by recirculating the water in the SIS sump using the HPSI pumps upon receipt of a recirculation actuation signal (RAS). The switchover

from injection to recirculation occurs automatically when the level of RWSP reaches the RAS setpoint.

Simplified flow diagrams are provided below for HPSI and LPSI.

TS SR 4.5.2e verifies that each automatic valve in the SIS flow path from the RWSP to RCS actuates to its correct position and that the HPSI and LPSI pumps start on an SIAS test signal. Additionally, TS SR 4.5.2e verifies that the LPSI pump stops and the SIS sump isolation valves open on an RAS test signal. This surveillance provides a level of assurance that the SIS will align and respond as assumed in the safety analysis. The following components are tested in accordance with TS SR 4.5.2e:

Component ID	Description	K-Relay	Safety Function
SI0002A	HPSI Pump A	K110A	start on SIAS
SI0002B	HPSI Pump B	K110B	start on SIAS
SI0002AB	HPSI Pump AB	K110A or K110B	start on SIAS*
SI0001A	LPSI Pump A	K110A	start on SIAS
SI0001A	LPSI Pump A	K104A	trip on RAS
SI0001B	LPSI Pump B	K110B	start on SIAS
SI0001B	LPSI Pump B	K104B	trip on RAS
SI-106A	RWSP Outlet Valve	K110A	open on SIAS
SI-106B	RWSP Outlet Valve	K110B	open on SIAS
SI-138A	LPSI Flow Control Valve to Loop 2B	K302A	open on SIAS
SI-138B	LPSI Flow Control Valve to Loop 1B	K401B	open on SIAS
SI-139A	LPSI Flow Control Valve to Loop 2A	K409A	open on SIAS
SI-139B	LPSI Flow Control Valve to Loop 1A	K403B	open on SIAS
SI-225A	HPSI Flow Control Valve to Loop 1A	K403A	open on SIAS
SI-225B	HPSI Flow Control Valve to Loop 1A	K403B	open on SIAS
SI-226A	HPSI Flow Control Valve to Loop 1B	K301A	open on SIAS
SI-226B	HPSI Flow Control Valve to Loop 1B	K401B	open on SIAS
SI-227A	HPSI Flow Control Valve to Loop 2A	K409A	open on SIAS

Component ID	Description	K-Relay	Safety Function
SI-227B	HPSI Flow Control Valve to Loop 2A	K302B	open on SIAS
SI-228A	HPSI Flow Control Valve to Loop 2B	K302A	open on SIAS
SI-228B	HPSI Flow Control Valve to Loop 2B	K409B	open on SIAS
SI-301	RCS Loop 1 Hot Leg Injection Drain Valve	K403A	close on SIAS
SI-302	RCS Loop 2 Hot Leg Injection Drain Valve	K302B	close on SIAS
SI-303A	Safety Injection Tank 1A Leakage Drain	K302A	close on SIAS
SI-303B	Safety Injection Tank 1B Leakage Drain	K401B	close on SIAS
SI-304A	Safety Injection Tank 2A Leakage Drain	K409A	close on SIAS
SI-304B	Safety Injection Tank 2B Leakage Drain	K403B	close on SIAS
SI-602A	SI Sump Outlet A	K110A	close on SIAS
SI-602A	SI Sump Outlet A	K309A	open on RAS
SI-602B	SI Sump Outlet B	K110B	close on SIAS
SI-602B	SI Sump Outlet B	K309B	open on RAS
SI-6011	LPSI Header Auto Vent Isolation	K302A	close on SIAS
SI-6012	LPSI Header Auto Vent Isolation	K302B	close on SIAS
SI-14023A	LPSI Vent Isolation	K302A	close on SIAS
SI-14024A	LPSI Vent Isolation	K302A	close on SIAS

* Starts if AB pump is aligned to replace either the A or B pump.

3.2 Containment Spray System

The containment spray system (CSS) is one of two containment heat removal systems credited in the safety analysis. The function of the containment heat removal systems under accident conditions is to remove heat from the containment atmosphere, thus maintaining the containment pressure and temperature at acceptably low levels. The containment heat removal systems also serve to limit offsite radiation levels by reducing the pressure differential between the containment atmosphere and the external environment, thereby decreasing the driving force for fission product leakage across the containment. Additional information on the containment heat removal systems can be found in FSAR Section 6.2.2.

Containment spray is automatically initiated by the containment spray actuation signal (CSAS). The CSS has two modes of operation which are: a) the injection mode, during which the system sprays borated water from the RWSP into the containment,

and b) the recirculation mode, which is automatically initiated by the RAS after low level is reached in the RWSP. During the recirculation mode of operation, suction for the spray pumps is from the SIS sump.

A simplified flow diagram of the CSS is provided below. Note that while shown separately, HPSI, LPSI, and CSS share common RWSP and SIS sump suctions.

TS SR 4.6.2.1d verifies that each automatic valve in the CSS flow path actuates to its correct position, the CSS pumps start on a CSAS and the SIS sump isolation valves open on a RAS test signal. This surveillance provides a level of assurance that the CSS will align and respond as assumed in the safety analysis. The following components are tested in accordance with TS SR 4.6.2.1d:

Component ID	Description	K-Relay	Safety Function
CS0001A	Containment Spray Pump A	K111A	start on CSAS
CS0001B	Containment Spray Pump B	K111B	start on CSAS
CS-125A	Containment Spray Header A Isolation	K304A	open on CSAS
CS-125B	Containment Spray Header B Isolation	K304B	open on CSAS
SI-602A	SI Sump Outlet A	K309A	open on RAS
SI-602B	SI Sump Outlet B	K309B	open on RAS

3.3 Component Cooling Water / Auxiliary Component Cooling Water

The component cooling water system (CCWS) and its corresponding auxiliary component cooling water system (ACCWS) ensure that sufficient cooling capacity is available for continued operation of safety-related equipment during normal and accident conditions. The CCWS is a closed loop cooling water system. The CCWS includes two CCW heat exchangers (tube side), three 100 percent capacity pumps, two dry cooling towers, one surge tank (baffled) and one chemical addition tank. The demineralized cooling water is pumped by the CCW pumps through the dry cooling towers and the tube side of the CCW heat exchangers, through the components being cooled and back to the pumps. The CCWS supplies cooling water to four paths: a nonessential seismically qualified loop, a nonessential non-seismic loop, and two redundant safety-related essential loops. The ACCWS is a separate system that provides cooling water to the CCW heat exchangers, and pumps it to the wet cooling towers for heat dissipation to the atmosphere. Additional information on the CCWS and ACCWS can be found in FSAR Section 9.2.

Upon receipt of an SIAS, the two redundant safety loops will be automatically isolated from each other and the nonessential, nonseismically qualified loop will be automatically isolated from both. The CCW pump suction and discharge header cross connect isolation valves will also close on SIAS. On an SIAS, the outlet valve on the "A" shutdown heat exchanger remains closed but may be opened manually from the control room, the outlet valve on the "B" shutdown heat exchanger goes fully open

automatically. The A loop also continues to provide cooling, upon SIAS, to the reactor coolant pumps via the nonessential seismically qualified loop.

Following isolation, on SIAS, separate CCWS trains are formed, and each supplies cooling water in sufficient quantity and at the required temperature to remove 100 percent of the heat necessary to shutdown the reactor.

Upon CSAS, the containment isolation valves on the supply and return lines of CCW to the reactor coolant pumps and control element drive mechanism coolers are automatically isolated, and the outlet valve on the A shutdown heat exchanger goes fully open automatically.

A simplified flow diagram of the CCWS is provided below.

TS SR 4.7.3b verifies that each automatic valve in the CCWS/ACCWS servicing safety-related equipment actuates to its correct position on an SIAS and CSAS test signal. This surveillance provides a level of assurance that the CCWS/ACCWS will align to provide cooling to the safety-related reactor auxiliaries assumed to operate post accident. The following components are tested in accordance with TS SR 4.7.3b:

Component ID	Description	K-Relay	Safety Function
ACC-126A	ACCW Header A CCW Heat Exchanger Outlet Temperature Control Valves	K410A	Temperature setpoint increases on SIAS
ACC-126B	ACCW Header B CCW Heat Exchanger Outlet Temperature Control Valves	K410B	Temperature setpoint increases on SIAS
CC-114A	CCW Pump A to AB Suction Cross Connect Isolation	K410A	close on SIAS*
CC-114B	CCW Pump B to AB Suction Cross Connect Isolation	K410A	close on SIAS*
CC-115A	CCW Pump A to AB Suction Cross Connect Isolation	K410B	close on SIAS*
CC-115B	CCW Pump B to AB Suction Cross Connect Isolation	K410B	close on SIAS*
CC-126A	CCW Pump A to AB Discharge Cross Connect Isolation	K410A	close on SIAS*
CC-126B	CCW Pump B to AB Discharge Cross Connect Isolation	K410A	close on SIAS*
CC-127A	CCW Pump A to AB Discharge Cross Connect Isolation	K410B	close on SIAS*
CC-127B	CCW Pump B to AB Discharge Cross Connect Isolation	K410B	close on SIAS*
CC-200A	CCW Header A to AB Supply Isolation	K304A	close on CSAS
CC-200B	CCW Header B to AB Supply Isolation	K410B	close on SIAS
CC-501	CCW Non-Safety Supply Header Isolation	K410A	close on SIAS

Component ID	Description	K-Relay	Safety Function
CC-562	CCW Non-Safety Return Header Isolation	K410B	close on SIAS
CC-563	CCW Header AB to B Return Isolation	K410B	close on SIAS
CC-620	Fuel Pool Heat Exchanger Temperature Control	K410A	close on SIAS
CC-641	CCW to Containment Outside Containment Isolation	K114B	close on CSAS
CC-710	Containment CCW Return Header Inside Containment Isolation	K114A	close on CSAS
CC-713	CCW Return Header Outside Containment Isolation	K114B	close on CSAS
CC-727	CCW Header AB to A Return Isolation	K304A	close on CSAS
CC-807A	CFC CCW Containment Isolation Valves	K101A	open on SIAS
CC-807B	CFC CCW Containment Isolation Valves	K101B	open on SIAS
CC-808A	CFC CCW Containment Isolation Valves	K101A	open on SIAS
CC-808B	CFC CCW Containment Isolation Valves	K101B	open on SIAS
CC-822A	CFC CCW Containment Isolation Valves	K101A	open on SIAS
CC-822B	CFC CCW Containment Isolation Valves	K101B	open on SIAS
CC-823A	CFC CCW Containment Isolation Valves	K101A	open on SIAS
CC-823B	CFC CCW Containment Isolation Valves	K101B	open on SIAS
CC-963A	Shutdown Heat Exchanger A CCW Flow Control	K304A	full open on CSAS
CC-963B	Shutdown Heat Exchanger B CCW Flow Control	K410B	full open on SIAS

* Dependent on AB pump alignment. (e.g., If the AB pump is aligned to replace the A pump then the A to AB isolation valves will remain open.)

3.4 Essential Services Chilled Water System

The purpose of the Essential Services Chilled Water System (CHWS) is to provide chilled water for those air handling systems which cool spaces containing equipment required for safety- related operations. The CHWS is a closed loop system consisting of three 100 percent capacity subsystems, each consisting of one chiller; one chilled water pump; one chilled water expansion tank; instrumentation and controls; and piping and valves. These subsystems are piped such that the AB subsystem can be manually aligned to circulate chilled water through either of the two loops (A or B) which serve safety-related equipment in various parts of the Reactor Auxiliary Building.

Original plant design also included a third loop which supplied non-safety related equipment. This third loop was isolated on an SIAS by automatic isolation valves. In an effort to improve chilled water chemistry, a modification was implemented that permanently removed the non-safety related loop from the CHWS and negated the need for the automatic isolation valves. The non-safety related loop is now supplied chilled water from a physically separate non-safety supplemental chilled water system and the automatic isolation valves which closed on SIAS have been deleted.

TS SR 4.7.12.1c was originally placed in the TS to verify that each essential services chilled water automatic valve actuates to its proper position on an SIAS. With the elimination of the automatic isolation valves originally used to isolate the non-safety related portions of the CHWS, there are no automatic valves remaining in the CHWS that receive an SIAS.

3.5 Technical Specification Surveillance Requirement Testing

Surveillance testing at Waterford 3 is performed in accordance with written procedures. These procedures address the prerequisites, precaution and limitations, and initial conditions for performing the test. Testing required by the TS SRs discussed above are primarily performed in accordance with operating procedures OP-903-029, "Safety Injection Actuation Signal Test," OP-903-036, "Containment Spray Actuation Signal Test," and OP-903-091, "Recirculation Actuation Signal Test." Currently, these procedures require the plant to be shutdown in accordance with TS. Individual sections of these procedures contain "notes" and "cautions" that stand out and provide important information or cautions regarding the next few steps in the procedure.

On an SIAS, CSAS, and RAS, the engineered safety features actuation system de-energizes a series of sub-group relays (K-relays) which actuate plant equipment as required by plant design. K-relays actuate one or more components when de-energized. Actuation logic is described in FSAR Section 7.3.1.1.1 (SIAS), 7.3.1.1.2 (RAS), and 7.3.1.1.3 (CSAS).

The actuation system is designed to allow the K-relays to be de-energized one at a time on a test signal to verify proper actuation of the associated equipment. Additional information regarding individual sub-group relay testing is discussed in FSAR Section 7.3.1.1.1.9 (SIAS), 7.3.1.1.2.9 (RAS), and 7.3.1.1.3.9 (CSAS). The K-relays are tested online at least every 62 days in accordance with TS SR 4.3.2.1 with exceptions as noted in the TS (reference Note 3 on TS Table 4.3-2). The exceptions are for those K-relays that actuate equipment that should not be actuated while online.

3.6 Need for Technical Specification Change

By deleting the "during shutdown" limitation, testing of many of these components can be performed online and combined with testing currently required by TS SR 4.3.2.1. This will result in the work (i.e., testing) scope during a refueling or other plant outage being reduced, potentially reducing outage duration, and reducing the number of actuations on actuated components.

3.7 Simplified System Diagrams

The simplified flow diagrams below are provided for information only to facilitate a general understanding of the relationship of the various components within their associated systems, as discussed above. Not all valves discussed above are shown on the simplified flow diagrams.

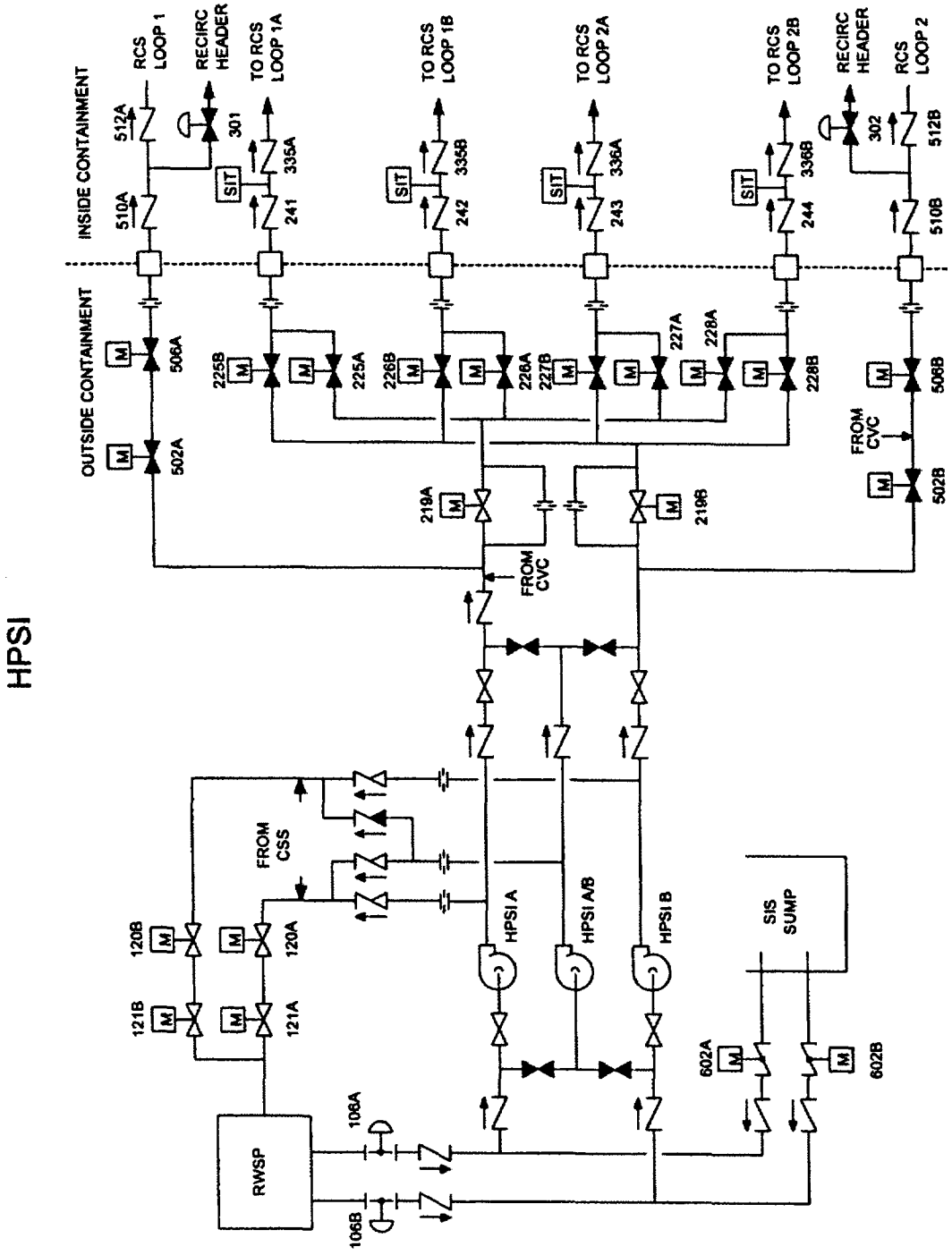

LPSI SYSTEM

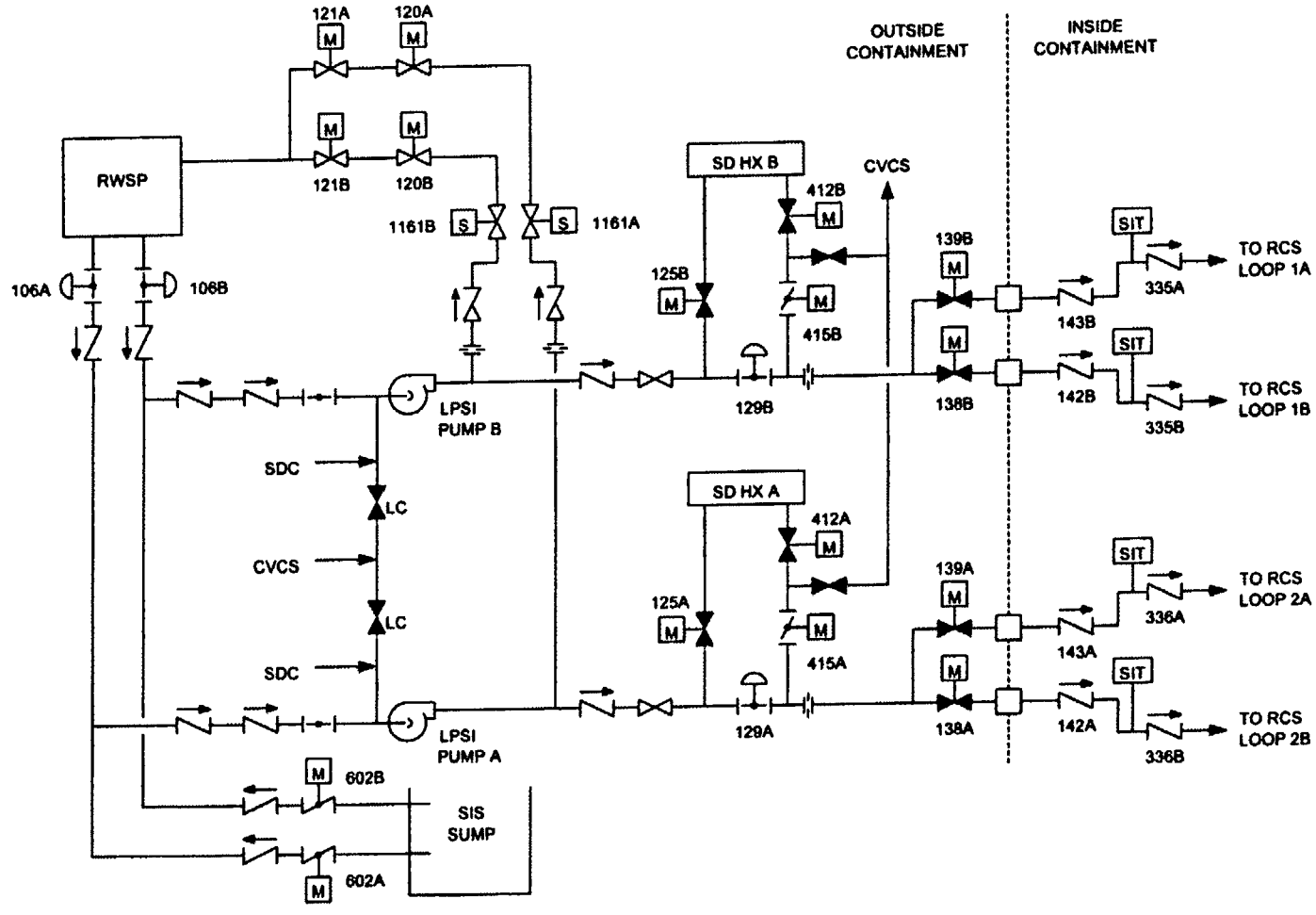
121A
120A
121B
120B
RWSP
1161B
1161A
106A
106B
OUTSIDE CONTAINMENT
INSIDE CONTAINMENT
SD HX B
CVCS
412B
125B
415B
129B
139B
138B
143B
142B
SIT
335A
335B
TO RCS LOOP 1A
TO RCS LOOP 1B
LPSI PUMP B
SDC
LC
CVCS
LC
SDC
SD HX A
412A
125A
415A
129A
139A
138A
143A
142A
336A
336B
TO RCS LOOP 2A
TO RCS LOOP 2B
LPSI PUMP A
602B
602A
SIS SUMP

CONTAINMENT SPRAY SYSTEM

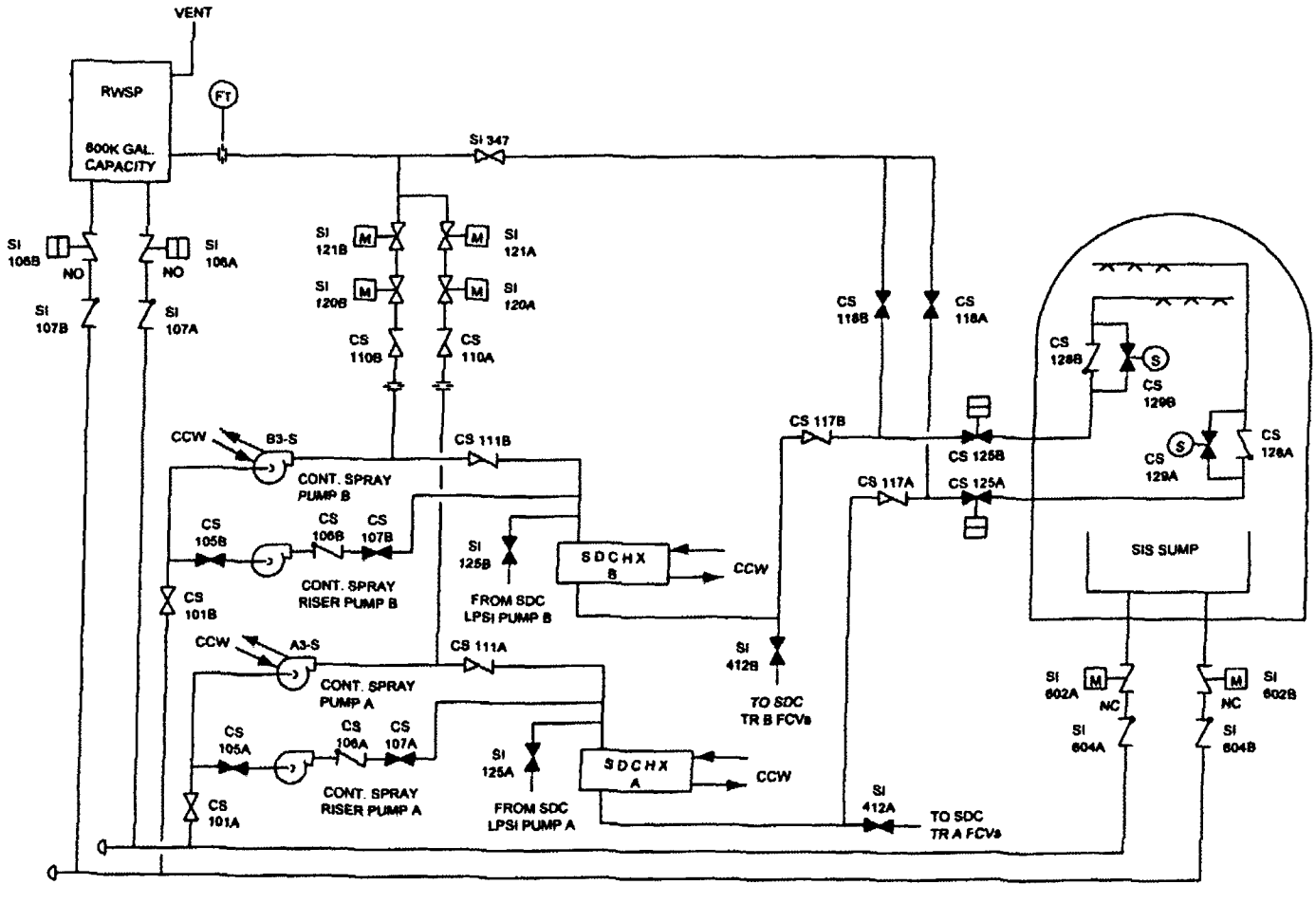

CCW PUMPS

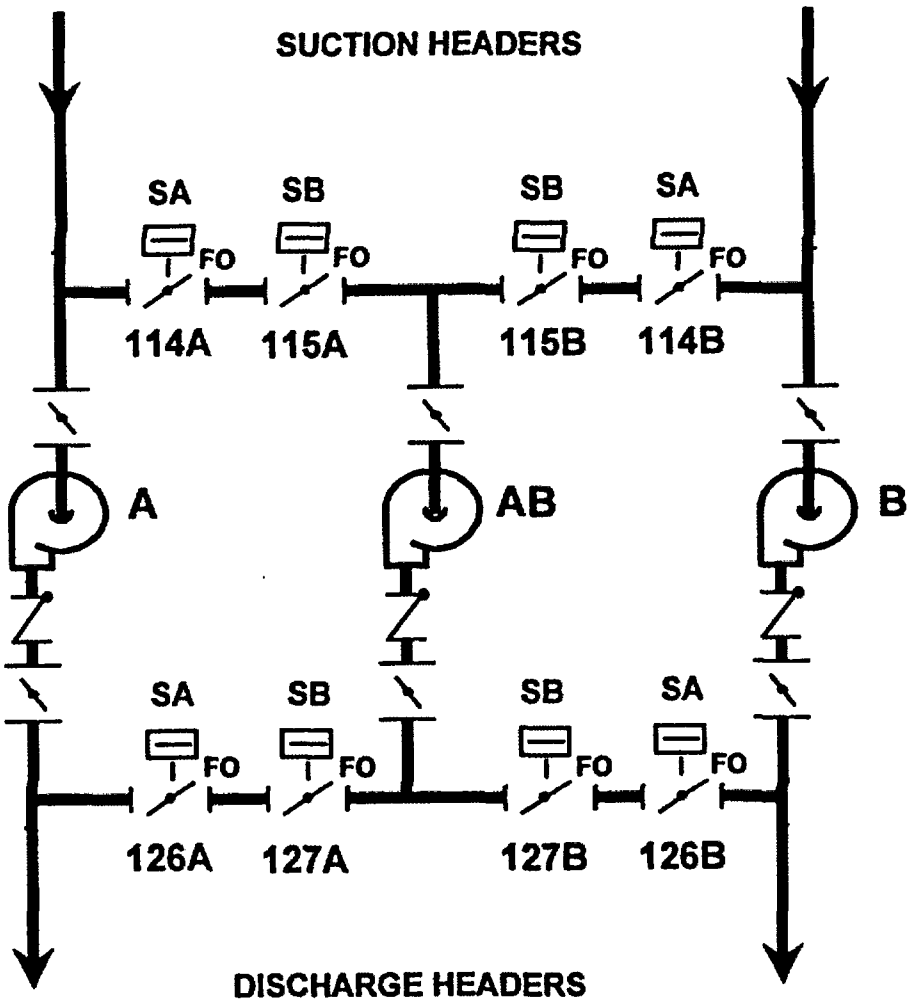
SUCTION HEADERS
SA
SB
SB
SA
FO
FO
FO
FO
114A
115A
115B
114B
A
AB
B
SA
SB
SB
SA
FO
FO
FO
FO
126A
127A
127B
126B
DISCHARGE HEADERS

CCW SUPPLY AND RETURN TO AB & NNS HEADERS

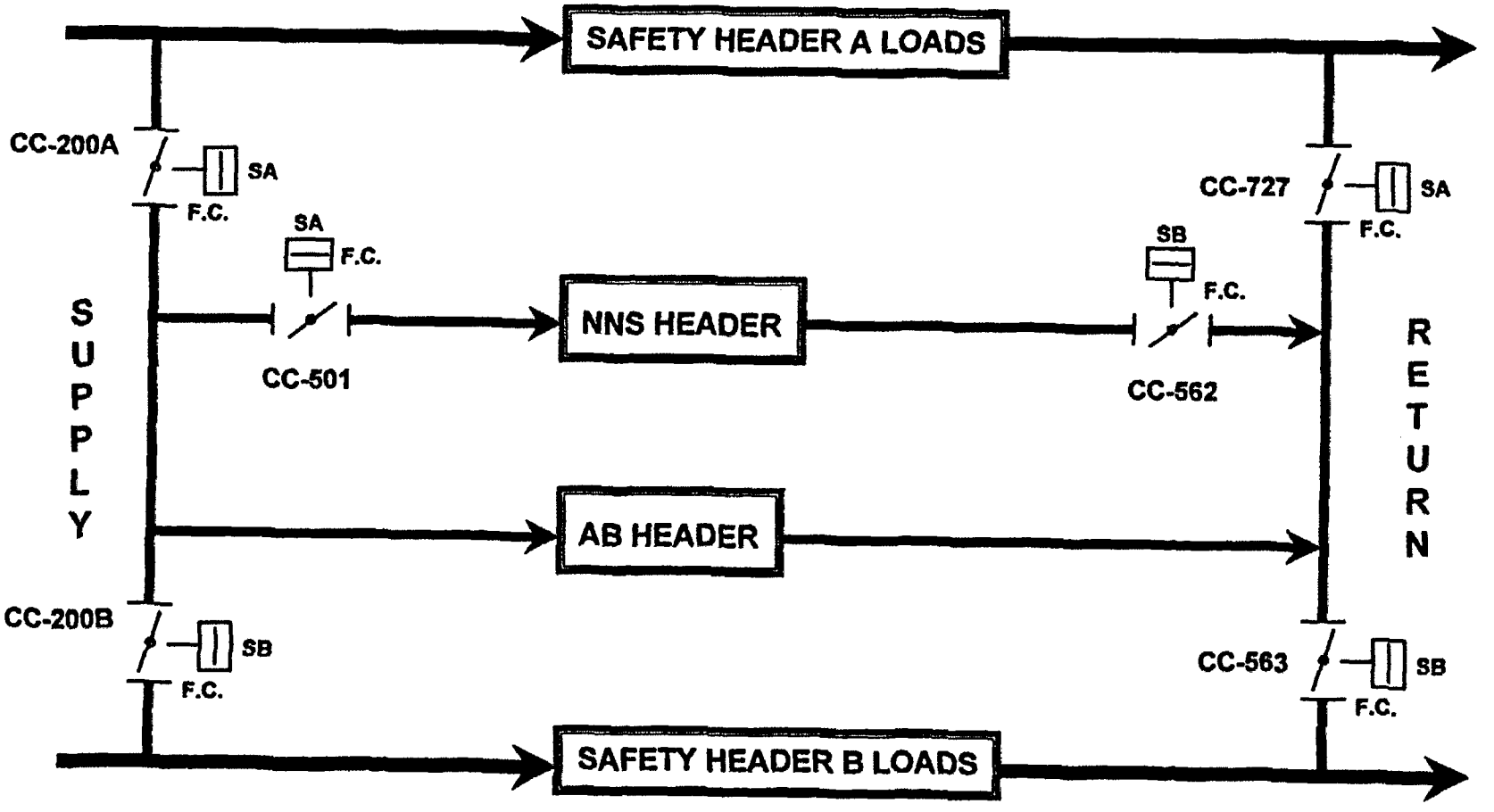

4.0 TECHNICAL ANALYSIS

4.1 Removal of "During Shutdown" Limitation

Technical Specification (TS) Surveillance Requirements (SR) 4.5.2e (Safety Injection), 4.6.2.1d (Containment Spray), and 4.7.3b (Component Cooling Water/Auxiliary Component Cooling Water) currently require that these specific SRs be performed once per 18 months during shutdown. The sub-group relays (K-relays) actuated to perform these SRs are also tested (Channel Functional Check) in accordance with TS SR 4.3.2.1 (Engineered Safety Features Actuation System Instrumentation) at least once per 62 days with an exception for specific K-relays that actuate components that cannot be actuated while the unit is online (e.g., K114 which would isolate component cooling water flow to the reactor coolant pumps). Note that the exception in TS SR 4.3.2.1 includes K301. With respect to the exception in TS SR 4.3.2.1 for K301, only K301B cannot be tested online, K301A is currently tested online at least once per 62 days.

Based on the exception contained in TS SR 4.3.2.1, of all the components that are required to be tested by TS SRs 4.5.2e, 4.6.2.1d, and 4.7.3b; only the following components cannot be tested online:

Component ID	Description	K-Relay	Safety Function
CC-641	CCW to Containment Outside Containment Isolation	K114B	close on CSAS
CC-710	Containment CCW Return Header Inside Containment Isolation	K114A	close on CSAS
CC-713	CCW Return Header Outside Containment Isolation	K114B	close on CSAS

Therefore, the majority of the components required to be tested by these SRs can be safely tested online with no adverse impact on plant operations negating the need to routinely perform a specific test during shutdown. Only the components that cannot be tested online need be tested during a shutdown.

Currently, SI-106A and B and SI-602A and B are not actuated during the online SIAS test of the K110 subgroup relays. The K110 sub-group relays are tested online, in accordance with TS SR 4.3.2.1, by verifying that the HPSI and LPSI pumps start on an SIAS test signal. During the online test, the K110 subgroup relays send an open signal to already open SI-106A and B (RWSP outlet valves) and a closed signal to already closed SI-602A and B (SIS Sump outlet valves); therefore, these valves do not actuate during the online test. These valves are currently actuated on an SIAS test signal during shutdown. These valves are stroked online in accordance with the Inservice Testing Program indicating that they can be safely stroked online. To actuate these valves online via an SIAS test signal, it would be prudent to prevent the automatic start of the HPSI, LPSI, and CS pumps, as is done during the shutdown test, with the system initially aligned to the dry SIS sump and RWSP isolated. This would require entry into a 72 hour shutdown allowed outage time (AOT) per TS 3.5.2,

Action b, a 7 day shutdown AOT per TS 3.6.2.1, Action a, and a 4 hour action to isolate the normally water filled containment spray penetration per TS 3.6.3.

With the approval of this amendment request, online component actuations currently performed per TS SR 4.3.2.1 can be used to satisfy testing requirements for the majority of the components required to be tested by TS SRs 4.5.2e, 4.6.2.1d, and 4.7.3b. Thus, no additional online component actuations would be performed except for SI-106A(B) and SI-602A(B) on an SIAS test signal. Valves CC-641, CC-710, and CC-713 would continue to be tested during shutdowns.

Surveillance testing is implemented via written procedures which specify the plant condition in which the test can be performed. Procedural controls can be effectively utilized to ensure that testing of specific components is performed only during shutdown without the need for a "during shutdown" limitation specified in the TS SR.

The test frequency is not changed by this amendment request and remains on an 18 month frequency.

Maintenance activities, at Waterford 3, are conducted in accordance with 10 CFR 50.65(a)(4) which requires that before performing maintenance activities (e.g., surveillance testing) the licensee shall assess and manage the increase in risk that may result from the proposed maintenance activities. Thus, online testing of the components would be assessed and managed to avoid undue risk.

4.2 Deletion of Surveillance Requirement 4.7.12.1c

TS SR 4.7.12.1c verifies that all essential services chilled water automatic valves servicing safety-related equipment actuate to their proper position on an SIAS test signal. TS SR 4.7.12.1d, which is not being deleted, verifies that the essential services chilled water pumps and compressors start automatically on an SIAS test signal.

The original design of the essential services chilled water system at Waterford 3 included eight isolation valves that automatically closed on an SIAS to isolate the non-safety related chilled water loop from the safety-related portions of the system. The non-safety related chilled water loop was modified to physically separate it from the essential services chilled water system and it is now connected to a non-safety related supplemental chilled water system. The eight automatic isolation valves were removed from the system when the non-safety related loop was disconnected.

Therefore, the deletion of TS SR 4.7.12.1c is an administrative change and acceptable because the essential services chilled water system no longer contains any automatic valves servicing safety-related equipment that reposition on an SIAS. TS SR 4.7.12.1d will continue to require testing of the essential services chilled water system pumps and compressors which do start on an SIAS. Also, TS SR 4.7.12.1a will continue to verify that each valve (manual, power-operated, or automatic) servicing safety-related equipment that is not locked, sealed, or otherwise secured in position, is in its correct position.

5.0 REGULATORY ANALYSIS

5.1 Applicable Regulatory Requirements/Criteria

The proposed changes have been evaluated to determine whether applicable regulations and requirements continue to be met.

10 CFR 50.36(c)(3), Surveillance Requirements states:

> *Surveillance requirements are requirements relating to test, calibration, or inspection to assure that the necessary quality of systems and components is maintained, that facility operation will be within safety limits, and that the limiting conditions for operation will be met.*

10 CFR 50.36 does not require that the initial conditions (in this case "during shutdown") for performing surveillance requirements (SRs) be specified in the SR. For Technical Specification (TS) SRs 4.5.2e (Safety Injection), 4.6.2.1d (Containment Spray), and 4.7.3b (Component Cooling Water/Auxiliary Component Cooling Water) the actual surveillance requirements, to verify proper actuation on the specified actuation test signal, remain unchanged and, therefore, continue to comply with 10 CFR 50.36. In the case of TS SR 4.7.12.1c (Essential Services Chilled Water), since an SIAS signal is no longer required to reposition any automatic valves in the essential services chilled water system, the SR no longer serves to "assure that the necessary quality of systems and components is maintained, that facility operation will be within safety limits, and that the limiting conditions for operation will be met." Therefore, it is acceptable to delete the SR.

Entergy has determined that the proposed changes do not require any exemptions or relief from regulatory requirements, other than the TS, and do not affect conformance with any General Design Criterion (GDC) differently than described in the Final Safety Analysis Report (FSAR).

5.2 No Significant Hazards Consideration

Technical Specification (TS) Surveillance Requirement (SR) 4.7.12.1c (Essential Services Chilled Water), to verify that automatic valves in the system actuate on a Safety Injection Actuation Signal (SIAS), is being deleted since there are no valves in the system that actuate on an SIAS. The "during shutdown" limitation is being removed from TS SRs 4.5.2e (Safety Injection), 4.6.2.1d (Containment Spray), and 4.7.3b (Component Cooling Water/Auxiliary Component Cooling Water) to provide the flexibility to perform testing online without reducing the testing requirements or test frequency. Components required to be tested by these TS SRs, except for three component cooling water valves (CC-641, CC-710, and CC-713), are currently manipulated online per other TS SRs without adverse consequences.

Entergy Operations, Inc. has evaluated whether or not a significant hazards consideration is involved with the proposed amendment by focusing on the three standards set forth in 10 CFR 50.92, "Issuance of amendment," as discussed below:

1. Does the proposed change involve a significant increase in the probability or consequences of an accident previously evaluated?

   Response: No.

   Deletion of TS SR 4.7.12.1c is an administrative change since there are no valves in the essential services chilled water system for which the TS SR 4.7.12.1c is applicable. The deletion of the "during shutdown" restriction from TS SRs 4.5.2e (Safety Injection), 4.6.2.1d (Containment Spray), and 4.7.3b (Component Cooling Water/Auxiliary Component Cooling Water) does not impact system operation nor does it reduce TS SRs. Component actuations that will be allowed to be performed online for these TS SRs are either already actuated online for other TS SRs or the components to be actuated online are currently stroked online in accordance with the Inservice Testing Program. Therefore, the accident mitigation features of the plant for previously evaluated accidents are not affected by the proposed amendment.

   Therefore, the proposed change does not involve a significant increase in the probability or consequences of an accident previously evaluated.

2. Does the proposed change create the possibility of a new or different kind of accident from any accident previously evaluated?

   Response: No.

   Deletion of TS SR 4.7.12.1c is an administrative change since there are no valves in the essential services chilled water system for which the TS SR 4.7.12.1c is applicable. The deletion of the "during shutdown" restriction from TS SRs 4.5.2e (Safety Injection), 4.6.2.1d (Containment Spray), and 4.7.3b (Component Cooling Water/Auxiliary Component Cooling Water) does not impact system operation nor does it reduce TS SR. Component actuations that will be allowed to be performed online for these TS SRs are either already actuated online for other TS SRs or the components to be actuated online are currently stroked online in accordance with the Inservice Testing Program. Therefore, the proposed change introduces no new mode of plant operation and no new possibility for an accident is introduced.

   Therefore, the proposed change does not create the possibility of a new or different kind of accident from any previously evaluated.

3. Does the proposed change involve a significant reduction in a margin of safety?

   Response: No.

   There are no automatic valves in the essential services chilled water system that actuate on an SIAS. Deletion of the "during shutdown" limitation does not change the TS test requirements or surveillance frequency. Therefore, existing TS surveillance

requirements are not reduced by the proposed change, thus no margins of safety are reduced.

Therefore, the proposed change does not involve a significant reduction in a margin of safety.

Based on the above, Entergy concludes that the proposed amendment present no significant hazards consideration under the standards set forth in 10 CFR 50.92(c), and, accordingly, a finding of "no significant hazards consideration" is justified.

5.3 Environmental Considerations

The proposed amendment does not involve (i) a significant hazards consideration, (ii) a significant change in the types or significant increase in the amounts of any effluent that may be released offsite, or (iii) a significant increase in individual or cumulative occupational radiation exposure. Accordingly, the proposed amendment meets the eligibility criterion for categorical exclusion set forth in 10 CFR 51.22(c)(9). Therefore, pursuant to 10 CFR 51.22(b), no environmental impact statement or environmental assessment need be prepared in connection with the proposed amendment.

Attachment 2

W3F1-2005-0075

Proposed Technical Specification Changes (mark-up)

EMERGENCY CORE COOLING SYSTEMS

SURVEILLANCE REQUIREMENTS (Continued)

2. A visual inspection of the safety injection system sump and verifying that the subsystem suction inlets are not restricted by debris and that the sump components (trash racks, screens, etc.) show no evidence of structural distress or corrosion.

3. Verifying that a minimum total of 380 cubic feet of granular trisodium phosphate dodecahydrate (TSP) is contained within the TSP storage baskets.

4. Verifying that when a representative sample of 13.07 ± 0.03 grams of TSP from a TSP storage basket is submerged, without agitation, in 4 ± 0.1 liters of 120 ± 10°F water borated to 3011 ± 30 ppm, the pH of the mixed solution is raised to greater than or equal to 7 within 3 hours.

e. At least once per 18 months, during shutdown, by:

1. Verifying that each automatic valve in the flow path actuates to its correct position on SIAS and RAS test signals.

2. Verifying that each of the following pumps start automatically upon receipt of a safety injection actuation test signal:

a. High pressure safety injection pump.

b. Low pressure safety injection pump.

3. Verifying that on a recirculation actuation test signal, the low pressure safety injection pumps stop, the safety injection system sump isolation valves open.

f. By verifying that each of the following pumps required to be OPERABLE performs as indicated on recirculation flow when tested pursuant to the Inservice Testing Program:

1. High pressure safety injection pump differential pressure greater than or equal to 1429 psid.

2. Low pressure safety injection pump differential pressure greater than or equal to 168 psid.

CONTAINMENT SYSTEMS

3/4.6.2 DEPRESSURIZATION AND COOLING SYSTEMS (Continued)

SURVEILLANCE REQUIREMENTS (Continued)

d. At least once per 18 months ~~during shutdown~~ by:

1. Verifying that each automatic valve in the flow path actuates to its correct position on a CSAS test signal.

2. Verifying that upon a recirculation actuation test signal, the safety injection system sump isolation valves open and that a recirculation mode flow path via an OPERABLE shutdown cooling heat exchanger is established.

3. Verifying that each spray pump starts automatically on a CSAS test signal.

e. At least once per 10 years by performing an air or smoke flow test through each spray header and verifying each spray nozzle is unobstructed.

PLANT SYSTEMS

3/4.7.3 COMPONENT COOLING WATER AND AUXILIARY COMPONENT COOLING WATER SYSTEMS

LIMITING CONDITION FOR OPERATION

3.7.3 At least two independent component cooling water and associated auxiliary component cooling water trains shall be OPERABLE.

APPLICABILITY: MODES 1, 2, 3, and 4.

ACTION:

With only one component cooling water and associated auxiliary component cooling water train OPERABLE, restore at least two trains to OPERABLE status within 72 hours or be in at least HOT STANDBY within the next 6 hours and in COLD SHUTDOWN within the following 30 hours.

SURVEILLANCE REQUIREMENTS

4.7.3 Each component cooling water and associated auxiliary component cooling water train shall be demonstrated OPERABLE:

a. At least once per 31 days by verifying that each valve (manual, power-operated, or automatic) servicing safety-related equipment that is not locked, sealed, or otherwise secured in position, is in its correct position.

b. At least once per 18 months ~~during shutdown~~, by verifying that each automatic valve servicing safety-related equipment actuates to its correct position on SIAS and CSAS test signals.

c. At least once per 18 months by verifying that each component cooling water and associated auxiliary component cooling water pump starts automatically on an SIAS test signal.

PLANT SYSTEMS

3/4.7.12 ESSENTIAL SERVICES CHILLED WATER SYSTEM

LIMITING CONDITION FOR OPERATION

3.7.12 Two independent essential services chilled water loops shall be OPERABLE.

APPLICABILITY: MODES 1, 2, 3, and 4

ACTION:

With only one essential services chilled water loop OPERABLE, restore two loops to OPERABLE status within 72 hours or be in at least HOT STANDBY within the next 6 hours and in COLD SHUTDOWN within the following 30 hours.

SURVEILLANCE REQUIREMENTS

4.7.12.1 Each of the above required essential services chilled water loop shall be demonstrated OPERABLE:

a. At least once per 31 days by verifying that each valve (manual, power-operated, or automatic) servicing safety-related equipment that is not locked, sealed, or otherwise secured in position, is in its correct position.

b. At least once per 31 days by verifying that the water outlet temperature is ≤ 42°F at a flow rate of ≥ 500 gpm.

c. ~~At least once per 18 months during shutdown, by verifying that each automatic valve servicing safety-related equipment actuates to its correct position on a safety injection actuation test signal.~~ Deleted

d. At least once per 18 months, by verifying that each essential services chilled water pump and compressor starts automatically on a safety injection actuation test signal.

4.7.12.2 The backup essential services chilled water pump and chiller shall be demonstrated OPERABLE in accordance with Specification 4.7.12.1 whenever it is functioning as part of one of the required essential services chilled water loops.