UNIVERSITY OF MARYLAND
MARYLAND UNIVERSITY TRAINING REACTOR
LICENSE NO. R-70
DOCKET NO. 50-166

SAFETY ANALYSIS REPORT
DATED 12 MAY 2000

REDACTED VERSION*
IN ACCORDANCE WITH
10 CFR 2.390(d)(1)

*Redacted text and figures blacked out or denoted by brackets

UNIVERSITY OF
MARYLAND

GLENN L. MARTIN INSTITUTE OF TECHNOLOGY
A. JAMES CLARK SCHOOL OF ENGINEERING
Department of Materials and Nuclear Engineering

Aris Christou, Chairman

Building 090
College Park, Maryland 20742-2115
301.405.5208 TEL 301.314.2029 FAX
christou@eng.umd.edu

REQUESTING A RENEWAL OF
OPERATING LICENSE NO. R-70

May 12, 2000

United States Nuclear Regulatory Commission
Document Control Desk
Washington, D. C. 20555-001

RE: Docket No. 50-166: University of Maryland
Application for Renewal of Operating License No. R-70

The University of Maryland hereby applies for renewal of its Class 104 Operating License No. R-70, issued to the University in August 1984 by the Nuclear Regulatory Commission (NRC). The University's license is currently scheduled to expire on June 29, 2000.

Specifically, in accordance with Title 10 of the Code of Federal Regulations, the University encloses the following materials for your review:

1. Enclosure 1: General information (10 C. F. R. § 50.33);
2. Enclosure 2: Updated Safety Analysis Report for the Maryland University Training Reactor (MUTR) (10 C. F. R. § 50.33).
3. Enclosure 3: Environmental Report (10 C. F. R. Part 51)
4. Enclosure 4: Technical Specifications (consistent with ANSI/ANS 15.1-1990 and NUREG-1537);
5. Enclosure 5. Oath (10 C.F. R. 50.30(b))

The Emergency Plan (10 C. F. R. 50.54(q) and (r) and 10 C. F. R. Part 50, Appendix E), the Physical Security Plan (10 C. F. R. 73.67) and Financial Qualifications (10 C. F. R. 50.33(f)) are addressed in SAR sections 12.7, 12.8, and 15, respectively.

By copy of this letter, the University is also transmitting one copy of the Application for Renewal to the inspector of the MUTR and the Mr. Alexander Adams, Jr., Senior Project Manager, Events Assessment, Generic Communications and Non-Power Reactors Branch, Division of Regulatory Improvement Programs of the NRC.

A020 | 2

NRR-060

Please contact Dr. Mohamad Al-Sheikhly, MUTR Director, at (301) 405-5214 for additional information and clarification and to schedule a visit to the MUTR.

Thank you for your consideration.

Sincerely,

Dr. Aris Christou
Professor and Chair
Department of Materials and Nuclear Engineering

JANET P. TURNBULL
NOTARY PUBLIC STATE OF MARYLAND
MY COMMISSION EXPIRES MARCH 1, 2003

May 23, 2000

cc: T. Dragoun - NRC
Mr. Alexander Adams, Jr. - NRC
Mohamad Al-Sheikhly - Director of Radiation Facilities
Anne Bowden - University Counsel
G. Geoffroy - Senior Vice President for Academic Affairs and Provost
W. Destler - Vice President for Research and Dean, Graduate School
N. Farvardin - Dean, A. James Clark School of Engineering (effective August 2000)
H. Rabin - Interim Dean, A. James Clark School of Engineering

Enclosure 1
General Information (10 C. F. R. 50.33)

Name of Applicant: University of Maryland

Address of Applicant: c/o Dr. Aris Christou, Chairman
Department of Materials and Nuclear Engineering
University of Maryland
College Park, Maryland 20742

Description of Business of Applicant:

The University of Maryland is a public institution of higher education and a constituent institution of the University System of Maryland. By statute, the University System of Maryland is obligated, among other things, to "maintain and enhance the College Park campus as the State's flagship campus with programs and faculty nationally and internationally recognized for excellence in research and the advancement of knowledge."

Legal Status and Organization:

Applicant is a public corporation and instrumentally of the State of Maryland; it is not owned, controlled or dominated by any foreign company or government or entity. The University of Maryland submits this application for renewal solely on its own behalf.

Principal Administrative Officers of the University of Maryland:

C. D. Mote, Jr., President
Gregory L. Geoffroy, Provost and Senior Vice President
William H. Destler, Vice President for Research and Dean of the Graduate School
Charles F. Sturtz, Vice President for Administrative Affairs
William L. Thomas, Vice President for Student Affairs
Brodie Remington, Vice President for University Relations

University System of Maryland Board of Regents:

Correspondence for the Board of Regents may be sent to the Office of the Board of Regents, University System of Maryland, 3300 Metzerott Road, Suite 2C, Adelphi, MD 20783

Nathan A. Chapman, Jr., Chairman
Edwin S. Crawford
Michael C. Gelman, Assistant Treasurer
Steny H. Hoyer, Secretary
Leronia A. Josey
Jeong H. Kim
Lance W. Billingsley
Thomas B. Finan, Jr.
Louise Michaux Gonzales, Treasurer
Nina Rodale Houghton
Clifford Kendall
Admiral Charles R. Larson, (Ret.), Vice Chairman

Lillian Hobson Lincoln, Assistant Secretary
David H. Nevins
William T. Wood

Andrew D. Miller, Student Regent
Henry A. Virts, DVM ex officio

Enclosure 1-1

Class of License:

The University seeks renewal of a Class 104 operating license for a renewal term of twenty (20) years. The MUTR will continue to be used during the period of renewal primarily for research and in support of the educational programs and activities of the Department of Materials and Nuclear Engineering and other departments and secondarily for service work to local industry and government agencies at the State and federal levels. This application does not seek approval for any construction or alteration in the structure of the MUTR. This application requests a renewal of any and all NRC licenses that are currently subsumed or combined with the current operating license.

Communications:

All communications to the University relating to this Application should be sent to the following persons at the University of Maryland, College Park, Maryland 20742:

Dr. Aris Christou
Professor and Chair
Department of Materials and Nuclear Engineering

Dr. Mohamad Al-Sheikhly
MUTR Director
Building 090

Dr. Nariman Farvardin
Dean, A. James Clark School of Engineering

Anne Bowden
University Counsel
2101 Main Administration

Tom Long
Radiation Safety Office

AFFIRMATION OF UNIVERSITY OF MARYLAND

STATE OF MARYLAND	:	**Docket No. 50-166**
	:	
PRINCE GEORGE'S COUNTY	:	**United States Nuclear Regulatory Commission**

I, Dr. Aris Christou, being duly sworn, state that I am Professor and Chair of the Department of Materials and Nuclear Engineering within the School of Engineering at the University of Maryland, and that I am duly authorized to execute and file this Application for Renewal of Operating License No. R-70 for a Class 104 facility on behalf of the University of Maryland. To the best of my knowledge and belief, the statements contained in the documents comprising this Application for Renewal are true and correct. To the extent that statements are not based on my personal knowledge, they are based upon information provided by other University of Maryland employees, officers or agents. I have reviewed such information and believe it to be reliable. This Affirmation is submitted in accordance with Title 10 Code of Federal Regulations Section 50.30(b).

A. Christou

Dr. Aris Christou
Professor and Chair
Department of Materials and Nuclear Engineering
University of Maryland
College Park, Maryland 20742

JANET P. TURNBULL
NOTARY PUBLIC STATE OF MARYLAND
MY COMMISSION EXPIRES MARCH 1, 2003

Subscribed and sworn before me, a Notary Public in and for the State of Maryland and Prince George's County, this 23 Day of May 2000.

Witness my Hand and Notarial Seal:

Notary Public

My Commission Expires:

Date

JANET P. TURNBULL
NOTARY PUBLIC STATE OF MARYLAND
MY COMMISSION EXPIRES MARCH 1, 2003

SAFETY ANALYSIS REPORT

FOR THE

MARYLAND UNIVERSITY TRAINING REACTOR

License No. R-70

Docket No. 50-166

28 MAR 2000

TABLE OF CONTENTS

TABLE OF CONTENTS i

LIST OF TABLES viii

LIST OF FIGURES ix

1.0 THE FACILITY 1-1

1.1 INTRODUCTION 1-1

1.2 SUMMARY AND CONCLUSIONS ON PRINCIPAL SAFETY CONSIDERATIONS 1-1

1.3 GENERAL DESCRIPTION 1-1
1.3.1 Location and Site 1-1
1.3.2 Principle Features 1-1
1.3.2.1 *General* 1-1
1.3.2.2 *Core* 1-2
1.3.2.3 *Control Rods* 1-2
1.3.2.4 *Pool Tank* 1-2
1.3.2.5 *Shielding* 1-2
1.3.2.6 *Nuclear Characteristics* 1-2
1.3.3 Instrumentation and Control 1-2
1.3.4 Radioactive Waste Management and Radiation Protection 1-3
1.3.5 Cooling System 1-3
1.3.6 Experimental Facilities 1-3

1.4 SHARED FACILITIES AND EQUIPMENT 1-3

1.5 COMPARISON WITH SIMILAR FACILITIES 1-4

1.6 SUMMARY OF OPERATIONS 1-4

1.7 COMPLIANCE WITH THE NUCLEAR WASTE POLICY ACT OF 1982 1-4

1.8 FACILITY MODIFICATIONS AND HISTORY 1-4

2.0 SITE CHARACTERISTICS 2-1

2.1 GEOGRAPHY AND DEMOGRAPHY 2-1
2.1.1 Site Location and Description 2-1
2.1.1.1 *Specification and Location* 2-1
2.1.1.2 *Boundary and Zone Area Maps* 2-1
2.1.2 Population Distribution 2-1

2.2 NEARBY INDUSTRIAL, TRANSPORTATION, AND MILITARY FACILITIES 2-7
2.2.1 Locations and Routes 2-7
2.2.2 Air Traffic 2-7
2.2.3 Analysis of Potential Accidents at Facilities 2-7

2.3 METEOROLOGY 2-7
2.3.1 General and Local Climate 2-7
2.3.2 Site Meteorology 2-8

TABLE OF CONTENTS (CONT)

2.4 HYDROLOGY 2-9

2.5 GEOLOGY, SEISMOLOGY, AND GEOTECHNICAL ENGINEERING 2-11
2.5.1 Regional Geology 2-11
2.5.2 Seismicity 2-11
2.5.3 Maximum Earthquake Potential 2-11
2.5.4 Vibratory Ground Motion 2-12
2.5.5 Surface Faulting and Liquefaction Potential 2-12

2.6 REFERENCES 2-12

3.0 DESIGN OF STRUCTURES, SYSTEMS, AND COMPONENTS 3-1

3.1 DESIGN CRITERIA 3-1

3.2 METEORLOGICAL DAMAGE 3-5

3.3 WATER DAMAGE 3-6

3.4 SEISMIC DAMAGE 3-6

3.5 SYSTEMS AND COMPONENTS 3-6

4.0 REACTOR DESCRIPTION 4-1

4.1 SUMMARY DESCRIPTION 4-1

4.2 REACTOR CORE 4-1
4.2.1 Reactor Fuel 4-1
4.2.1.1 *Fuel Moderator Elements* 4-1
4.2.1.2 *Instrumented Fuel Element* 4-2
4.2.1.3 *Four Rod Fuel Cluster* 4-2
4.2.1.4 *Instrumented Fuel Cluster* 4-2
4.2.1.5 *Control Rod Fuel Cluster* 4-2
4.2.2 Control Rods 4-2
4.2.2.1 *Control Rod Construction* 4-2
4.2.2.2 *Control Rod Drive Mechanism* 4-3
4.2.2.3 *Components* 4-3
4.2.3 Neutron Moderator and Reflector 4-4
4.2.4 Neutron Startup Source 4-4
4.2.5 Core Support Structure 4-4

4.3 REACTOR TANK 4-5

4.4 BIOLOGICAL SHIELD 4-5

4.5 NUCLEAR DESIGN 4-5
4.5.1 Normal Operating Conditions 4-5
4.5.2 Reactor Core Physics Parameters 4-6
4.5.3 Operating Limits 4-6

4.6 THERMAL HYDRAULIC DESIGN 4-7

5.0 REACTOR COOLANT SYSTEMS 5-1

TABLE OF CONTENTS (CONT)

5.1 SUMMARY DESCRIPTION 5-1
5.2 PRIMARY COOLANT SYSTEM 5-1
5.3 SECONDARY COOLANT SYSTEM 5-3
5.4 PRIMARY COOLANT CLEANUP SYSTEM 5-3
5.4.1 Microfilter 5-3
5.4.2 Demineralizer Column 5-3
5.5 PRIMARY MAKEUP WATER SYSTEM 5-4
5.6 NITROGEN-16 CONTROL SYSTEM 5-4
5.7 REACTOR SUMP 5-7

6.0 ENGINEERED SAFETY FEATURES 6-1

7.0 INSTRUMENTATION AND CONTROL SYSTEMS 7-1

7.1 SUMMARY DESCRIPTION 7-1
7.1.1 Reactor Control Systems 7-1
7.1.2 Reactor Protection Systems 7-1
7.1.3 Engineered Safety Feature Actuation Systems 7-1
7.1.4 Control Console and Instrumentation Displays 7-1
7.1.5 Radiation Monitoring Systems 7-1
7.2 DESIGN OF INSTRUMENTATION AND CONTROL SYSTEMS 7-2
7.2.1 System Performance and Analysis 7-2
7.2.1.1 *Reliability Analysis for Bistable Trip* 7-2
7.2.1.2 *Failure Mode Analysis for MUTR Console Scram and Rod Control Circuits* 7-3
7.2.2 Conclusion 7-5
7.3 REACTOR CONTROL SYSTEM 7-6
7.3.1 Manual Operation 7-6
7.3.1.1 *General Operation* 7-6
7.3.1.2 *Circuit Operation* 7-6
7.3.2 Automatic Operation 7-11
7.3.2.1 *Summary Description* 7-11
7.3.2.2 *Limiter* 7-14
7.3.2.3 *Power Amplifier* 7-14
7.3.2.4 *Preamplifier* 7-15
7.3.3 RCS Interlocks 7-15
7.4 REACTOR PROTECTION SYSTEM 7-16
7.4.1 Power Monitoring Systems 7-16
7.4.1.1 *Log Power, Safety 1, and Period* 7-16
7.4.1.1.1 *Wide Range Log Power Channel* 7-16
7.4.1.1.2 *Period Amplifier* 7-19
7.4.1.1.3 *Safety Channel 1* 7-19
7.4.1.2 *Wide Range Linear Power* 7-19
7.4.1.3 *Safety Channel 2* 7-20
7.4.2 Scram Functions 7-20

TABLE OF CONTENTS (CONT)

7.4.2.1 *Magnet Supply* 7-20
7.4.2.2 *Scram Relays* 7-22
7.4.2.3 *Scram Bar* 7-22
7.4.2.4 *Scram Reset* 7-22
7.4.2.5 *Bistable Trip* 7-22

7.5 ENGINEERED SAFETY FEATURES ACTUATION SYSTEMS 7-24

7.6 CONTROL CONSOLE AND DISPLAY INSTRUMENTS 7-24

7.7 RADIATION MONITORING SYSTEMS 7-29

8.0 ELECTRICAL POWER SYSTEMS 8-1

8.1 NORMAL ELECTRICAL POWER 8-1

8.2 EMERGENCY ELECTRICAL POWER 8-1

8.3 CONCLUSION 8-1

9.0 AUXILIARY SYSTEMS 9-1

9.1 HEATING, VENTILATIONS, AND AIR CONDITIONING SYSTEMS 9-1

9.2 HANDLING AND STORAGE OF REACTOR FUEL 9-1
9.2.1 Fuel Storage Rack 9-1
9.2.2 Fuel Cluster Handling Mechanism 9-1
9.2.3 Fuel Rod Transfer Cask 9-4
9.2.4 Fuel Rod Inspection Tool 9.4
9.2.5 Fuel Storage Pit 9-4

9.3 FIRE PROTECTION SYSTEMS 9-7

9.4 COMMUNICATION SYSTEMS 9-7

9.5 POSSESSION AND USE OF BYPRODUCT, SOURCE, AND SPECIAL NUCLEAR MATERIAL 9-7

10.0 EXPERIMENTAL FACILITIES AND UTILIZATION 10-1

10.1 SUMMARY DESCRIPTION 10-1

10.2 EXPERIMENTAL FACILITIES 10-1
10.2.1 Thermal Column 10-1
10.2.2 Beam Ports 10-1
10.2.3 Through Tube 10-2
10.2.4 Pneumatic Transfer System 10-2
10.2.5 Other Locations 10-2

10.3 EXPERIMENT REVIEW 10-2

11.0 RADIATION PROTECTION PROGRAM AND WASTE MANAGEMENT 11-1

11.1 RADIATION PROTECTION 11-1
11.1.1 Radiation Sources 11-1
11.1.1.1 *Airborne Radiation Sources* 11-1
11.1.1.2 *Liquid Radiation Sources* 11-1

TABLE OF CONTENTS (CONT)

11.1.1.3 *Solid Radiation Sources* 11-2
11.1.2 Radiation Protection Program 11-2
11.1.2.1 *President* 11-2
11.1.2.2 *Radiation Safety Committee* 11-4
11.1.2.3 *Deans, Directors, and Department Chair Persons* 11-4
11.1.2.4 *Radiation Safety Officer* 11-5
11.1.2.5 *Principal User* 11-5
11.1.3 ALARA Program 11-6
11.1.4 Radiation Monitoring and Surveying 11-7
11.1.5 Radiation Exposure Control and Dosimetry 11-8
11.1.5.1 *Prevention of Releases* 11-8
11.1.5.2 *Establishment and Control of High Radiation Areas* 11-8
11.1.5.3 *Expected Exposures and Dosimetry* 11-8
11.1.6 Contamination Control 11-9
11.1.7 Environmental Monitoring 11-9

11.2 RADIOACTIVE WASTE MANAGEMENT 11-10
11.2.1 Radioactive Waste Management Program 11-10
11.2.2 Radioactive Waste Control 11-11
11.2.3 Release of Radioactive Waste 11-11

12.0 CONDUCT OF OPERATIONS 12-1

12.1 ORGANIZATION 12-1
12.1.1 Structure 12-1
12.1.2 Responsibility 12-1
12.1.3 Staffing 12-4
12.1.4 Selection and Training of Personnel 12-4
12.1.4.1 *Reactor Director* 12-4
12.1.4.2 *Senior Reactor Operator* 12-5
12.1.4.3 *Reactor Operator* 12-5
12.1.4.4 *Reactor Technician* 12-5
12.1.5 Radiation Safety 12-5

12.2 REVIEWS AND AUDITS 12-6
12.2.1 Composition and Qualifications 12-6
12.2.2 Charter and Rules 12-6
12.2.3 Review Function 12-6
12.2.4 Audit Function 12-7

12.3 PROCEDURES 12-7

12.4 REQUIRED ACTIONS 12-8
12.4.1 Actions To Be Taken In Case of Safety Limit Violation 12-8
12.4.2 Actions To Be Taken In The Event Of A Reportable Occurrence 12-8

12.5 REPORTS 12-9
12.5.1 Annual Operating Report 12-9
12.5.2 Special Reports 12-10
12.5.3 Unusual Event Report 12-10

12.6 RECORDS 12-11

TABLE OF CONTENTS (CONT)

12.7 EMERGENCY PLANNING 12-11

12.8 SECURITY PLANNING 12-12

12.9 OPERATOR TRAINING AND REQUALIFICATION 12-12

12.10 ENVIRONMENTAL REPORTS 12-12

13.0 ACCIDENT ANALYSES 13-1

13.1 ACCIDENT-INITIATING EVENTS AND SEQUENCES 13-1
13.1.1 Maximum Hypothetical Accident 13-1
13.1.2 Insertion or Excess Reactivity 13-1
13.1.3 Loss of Coolant 13-1
13.1.4 Loss of Coolant Flow 13-1
13.1.5 Fuel Element Cladding Failure 13-1
13.1.6 Experiment Malfunction 13-1
13.1.7 Loss of Normal Electrical Power 13-1
13.1.8 External Events 13-2
13.1.9 Mishandling or Malfunction of Equipment 13-2

13.2 ACCIDENT ANALYSIS AND DETERMINATION OF CONSEQUENCES 13-2
13.2.1 Maximum Hypothetical Accident 13-2
13.2.2 Insertion of Reactivity 13-5
13.2.2.1 *Changes in Experimental Facilities* 13-5
13.2.2.2 *Movement of Control Rods* 13-5
13.2.2.3 *Insertion of Fuel* 13-5
13.2.3 Loss of Coolant 13-7
13.2.4 Fuel Element Cladding Failure 13-8
13.2.4.1 *Fission Product Inventory* 13-8
13.2.4.2 *Contamination of the Pool Water with Radioactivity* 13-8
13.2.4.3 *Airborne Fission Production Release* 13-9

13.3 SUMMARY AND CONCLUSIONS 13-9

13.4 REFERENCES 13-9

14.0 TECHNICAL SPECIFICATIONS 14-1

15.0 FINANCIAL QUALIFICATIONS 15-1

15.1 FINANCIAL ABILITY TO OPERATE A NON-POWER REACTOR 15-1

15.2 FINANCIAL ABILITY TO DECOMISSION A NON-POWER REACTOR 15-2

16.0 PRIOR UTILIZATION OF REACTOR COMPONENTS 16-1

16.1 REACTOR BUILDING 16-1

16.2 BIOLOGICAL SHEILD 16-1

16.3 REACTOR FUEL 16-1

16.4 REACTOR CONTROL SYSTEMS 16-1

TABLE OF CONTENTS (CONT)

16.5 WASTE HANDLING AND COOLANT SYSTEMS 16-2

LIST OF TABLES

Table 2.1: Estimated Population During Business Hours 2-6
Table 7.1: Rod Control and Scram Component Operating Characteristics 7-5
Table 7.2: Control Rod Pushbutton Indicator Light Logic 7-6
Table 11.1: Typical Annual Exposures at Various Facility Locations 11-9
Table 13.1: Nobel Gas Committed Dose Equivalent Calculation 13-4
Table 13.2: Iodine Lifetime Committed Dose to the Thyroid Calculation 13-4
Table 13.3: Radiocesium and Radiostrontium Uptake vs. ALI Limits 13-5
Table 13.4: Reactivity Changes in Experimental Facilities 13-5
Table 13.5 Kinetic Parameters for MUTR 13-6
Table 13.6: Fuchs-Nordhiem Power Pulse Characteristics 13-6
Table 13.7: $3.70 Pulse While Critical 13-7
Table 13.8: Fisison Product Release to the Pool Tank Due to Fuel Element Cladding Failure 13-8
Table 15.1: Summary of MUTR Operating Costs 15-1
Table 15.2: Summary of MUTR Funding Sources 15-1

LIST OF FIGURES

Figure 2.1: Reactor Site Topology 2-2
Figure 2.2: Campus Map-University of Maryland, College Park 2-3
Figure 2.3: Regional Map 2-4
Figure 2.4: Prince George's County 2-5
Figure 2.5: Reactor Site Map 2-6
Figure 2.6: Principal Streams Near Reactor Site 2-10
Figure 3.1: East-West Cross-Sections of Reactor Building 3-2
Figure 3.2: North-South Cross-Sections of Reactor Building 3-3
Figure 3.3: Top View of Reactor Building Balcony Level 3-4
Figure 3.4: Top View of Reactor Building Lower Level 3-5
Figure 4.1: Fuel-Moderator Element 4-8
Figure 4.2: Instrumented Fuel-Moderator Element 4-9
Figure 4.3: Four-Rod Fuel Clusters 4-10
Figure 4.4: Four-Rod Fuel Cluster Bottom Adapter 4-11
Figure 4.5: Fuel-Moderator Element End Fittings 4-12
Figure 4.6: Four-Rod Fuel Cluster Top Handle 4-13
Figure 4.7: Control Rod Drive Assembly 4-14
Figure 4.8: Borated Control Rod 4-15
Figure 4.9: Core Layout 4-16
Figure 4.10: Control Rod Drive Mechanism 4-17
Figure 4.11: Control Rod Drive Motor Details 4-18
Figure 4.12: Control Rod Draw Tube Details 4-19
Figure 4.13: Control Rod Magnet Details 4-20
Figure 4.14: Control Rod Armature Details 4-21
Figure 4.15: Reactor Core Grid Plate 4-22
Figure 4.16: Reactor Pool Tank 4-23
Figure 4.17: Bridge Support Structure 4-24
Figure 5.1: Primary Coolant System 5-2
Figure 5.2: Secondary Coolant System 5-5
Figure 5.3: Primary Makeup Water System 5-6
Figure 5.4: Reactor Sump 5-8
Figure 7.1: RCS and RPS Logic Diagram 7-7

LIST OF FIGURES (CONT)

Figure 7.2: Motor Control and Rod Drive Annunciator Circuit 7-9
Figure 7.3: Simplified Motor Control and Rod Drive Circuit 7-10
Figure 7.4: Simplified Motor Control Circuit 7-11
Figure 7.5: Power Regulation System (Automatic Mode) 7-12
Figure 7.6: Power Regulation System Schematic 7-13
Figure 7.7: Control System Schematic Diagram 7-17
Figure 7.8: Wide Range Log Power Channel Block Diagram 7-18
Figure 7.9: Scram Block Diagram 7-21
Figure 7.10: Bistable Trip Schematic 7-23
Figure 7.11: TRIGA Console and Upper Console 7-26
Figure 7.12: Auxiliary Console 7-26
Figure 7.13: Left TRIGA Console Panel 7-27
Figure 7.14: Center TRIGA Console Panel 7-27
Figure 7.15: Right TRIGA Console Panel 7-27
Figure 7.16: Left Upper Console Panel 7-28
Figure 7.17: Right Upper Console Panel 7-28
Figure 8.1: Breaker Panel #1 (East Beam Area) 8-2
Figure 8.2: Breaker Panel #2 (East Beam Area) 8-3
Figure 8.3: Breaker Panel #3 (West Balcony Foyer) 8-4
Figure 9.1: Exhaust Fan Control Locations 9-2
Figure 9.2: In-Pool Fuel Storage Rack 9-3
Figure 9.3: Fuel Rod Transfer Cask 9-5
Figure 9.4: Fuel Rod Inspection Tool 9-6
Figure 9.5: Fire Alarm Pull Box Locations and Intercom Speaker Locations 9-8
Figure 10.1: Thermal Column 10-4
Figure 10.2: Thermal Column Graphite Plug 10-4
Figure 10.3: Beam Tube 10-5
Figure 10.4: Beam Tube Plugs 10-5
Figure 10.5: Through Tube 10-6
Figure 10.6: Pneumatic Transfer System Terminus 10-7
Figure 11.1: Campus Radiation Protection Program Organization 11-3
Figure 12.1: MUTR Administrative Structure 12-2

LIST OF FIGURES (CONT)

Figure 12.2: MUTR Staff Structure 12-3

1.0 THE FACILITY

1.1 INTRODUCTION

In August 1984, the United States Nuclear Regulatory Commission (NRC) granted a twenty-year operating license, R-70, to the University of Maryland, a public agency and instrumentality of the State of Maryland. This license will expire at midnight on June 29, 2000. Section 50.30, "Filing of Application for licensing; oath or affirmation" of 10 CFR Part 50, "Domestic License of Production and Utilization of Facilities", requires that each application for a license to operate a facility include, along with other information, a Safety Analysis Report (SAR). It is the purpose of this Safety Analysis Report to support the application for the renewal of a Class 104 license to the University of Maryland Training Reactor (MUTR).

The MUTR is a 250 kW TRIGA reactor located on the main campus of the University of Maryland in College Park. The MUTR's primary purpose is to support the educational activities of the Nuclear Engineering Program and other degree granting programs on campus. Secondary uses of the MUTR include service work to local industry and government agencies. The primary safety function of the reactor, the insertion of its three control rods, relies on magnetic coupling and gravity and, thus, is failsafe. Secondary features include the ability of the fuel to be air cooled in the event of a complete loss of pool water and the fuel's temperature feedback mechanism

1.2 SUMMARY AND CONCLUSIONS ON PRINCIPAL SAFETY CONSIDERATIONS

The MUTR, a 250 kW, TRIGA fueled reactor, has as its primary safety mechanisms the highly negative fuel temperature coefficient, discussed in Section 4, which greatly limits the possible power excursions and a failsafe control rod drive system, discussed in Sections 4 and 7. The maximum hypothetical accident, see Section 13, is the cladding failure in air of the central fuel element due to a fuel handling mishap. The primary mitigation for this accident would be the reactor's confinement building, which serves as a large volume within which the fission products would be diluted. The confinement is described in section 6. Under normal operating conditions, the adverse consequences of the MUTR are small releases of ^{41}Ar from the reactor pool tank and experimental facilities, the generation of small amounts of low-level waste, and the future generation of small amounts of spent fuel.

1.3 GENERAL DESCRIPTION

1.3.1 Location and Site

The MUTR is located on the main campus of the University of Maryland in College Park, a suburb northeast of the District of Columbia. The reactor site is characterized by low, gently rolling hills. The reactor building is on a relatively flat portion of the campus near lower elevations.

1.3.2 Principal Features

1.3.2.1 *General*

Type of reactor	open pool training reactor
Operating power level	250 kW
Building requirements	10.67 m (35 ft) overhead, a 12.19 m x 12.19 m (40 ft) flow area, no excavation other than that for its mounting-pad footings.

1.3.2.2 *Core*

Core geometry ..... rectangular parallelpiped
Fuel ..... UZrH in stainless steel cladding
Fuel enrichment in U 235 ..... [redacted]
Number of fuel elements in core ..... [redacted]
Fuel loading ..... [redacted]
Moderation ..... H_2O
Reflector ..... graphite, H_2O

1.3.2.3 *Control Rods*

Shim Safety rods:
Number 2
Poison ..... Boron Carbide
Regulating Rod:
Number 1
Poison ..... Boron Carbide
Rod Drives:
Speed ..... 0.804 cm/s (19 in/min)
Total travel ..... 38.1 cm (15 in)
Release time of shim-safety/reg. rod ..... 30 ms
Drop time of shim-safety/reg. rod ..... maximum Tech Spec limit 1 s

1.3.2.4 *Pool Tank*

Material ..... Aluminum (0.95 cm, 3/8", thick walls and 1.27 cm, ½" thick base)
Diameter ..... 2.134 m (7 ft)
Height ..... 6.477 (21.25 ft)
Water above core ..... 5.334 (17.5 ft)

1.3.2.5 *Shielding*

Material and thickness:
Above core ..... 5.334 m (17.5 ft) H_2O
Around core ..... 0.610 m (2 ft) H_2O, 1.981 m (6.5 ft) concrete

1.3.2.6 *Nuclear Characteristics*

Prompt temperature coefficient ..... -4.9×10^{-4} $\Delta k/k/°C$
Prompt neutron lifetime ..... 3.9×10^{-5} sec
β_{eff} 0.007

1.3.3 Instrumentation and Control

Neutron detectors ..... 4 (Fission chamber, ion chamber, and two compensated ion chambers)
Scram channels 10

1.3.4 Radioactive Waste Management and Radiation Protection

Radiation Area Monitors 2
Sump ..... 1.219 m x 1.219 m x 3.353 m (4 ft x 4 ft x 11 ft) with 0.378 m^3 (100 gal) holdup tank
Hot Room ..... for storage of radioactive materials

1.3.5 Cooling System

Coolant flow rate ..... 7.57 l/s (120 gpm) (full flow)
Heat removal capacity ..... 300 kW
Demineralizer type ..... disposable-cartridge, non-regenerative

1.3.6 Experimental Facilities

Beam tubes:
Number 2
Outer Diameter ..... 15.24 cm (6")
Material ..... Aluminum
Through tube:
Number 1
Outer Diameter ..... 15.24 cm (6")
Material ..... Aluminum
Thermal Column:
Number 1
Material ..... graphite in aluminum and steel sleeve
Area of core end ..... 0.610 m x 0.610 m (2 ft x 2 ft)
Irradiation space available ..... variable
Sample-holding void in core (pneumatic tube):
Number 1
Maximum flux available for experiments (Steady State)
In fuel (< 1 eV) ..... 5.0×10^{12} n/cm^2/sec
(< 10 keV) ..... 1.2×10^{12}
In Pneumatic tube (< 1 eV) ..... 5.7×10^{12}
(< 10 keV) ..... 4.8×10^{12}

1.4 SHARED FACILITIES AND EQUIPMENT

Since the MUTR facility is physically connected to the Chemical and Nuclear Engineering Building there are a number of shared systems. Electrical power for the MUTR comes from the same bus that feeds the remainder of the building; however, there are disconnects located in the lower level of the reactor facility for all electrical subsystems within the facility. Chilled water for the MUTR air handler and steam for the MUTR radiant wall heaters are also shared with the rest of the building. Again, there are shutoffs located at the MUTR boundaries for these systems. Also, these systems are closed loop systems with no direct fluid exchange between the campus systems and the MUTR facility. Lastly, city water and sewage is also shared. At those locations where city water connects to the reactor coolant system, backflow prevention valves have been installed. In those areas where radioactive materials are used, water drains into the reactor sump to prevent unmonitored releases.

In addition to the MUTR the University of Maryland possesses an electron linear accelerator and a large Co-60 source. Both of these are also located within the Chemical and Nuclear Engineering Building. Neither of these facilities is located within the MUTR confinement. All three facilities share a loading area with the MUTR having one access to the loading area and the other two facilities sharing an access to the loading area.

1.5 COMPARISON WITH SIMILAR FACILITIES

The MUTR is a TRIGA conversion from an MTR-type reactor. As such it is similar to other TRIGA conversions, all of which have enjoyed many years of safe operation.

1.6 SUMMARY OF OPERATIONS

In its current mode of operation the MUTR is primarily used for educational instruction and operator training. Occasional irradiation work is performed for local government and industry organizations. The operation schedule in this mode of operation is on the order of two operations per week. The facility produces 0.057 to 0.085 m^3 (2 to 3 ft^3) of solid waste per year, of which the majority is spent resin from the primary water system's ion exchange column.

1.7 COMPLIANCE WITH THE NUCLEAR WASTE POLICY ACT OF 1982

Section 302(b)(1)(B) of the Nuclear Waste Policy Act of 1982 provides that the NRC may require, as a precondition to issuing or renewing an operating license for a research or test reactor, that the applicant shall have entered into an agreement with the Department of Energy (DOE) for the disposal of high-level radioactive waste and spent nuclear fuel. DOE (R. L. Morgan) has informed the NRC (H. Denton) by letter dated May 3, 1983, that it has determined that universities and other government agencies operating nonpower reactors have entered into contracts with DOE that provide that DOE retain title to the fuel and is obligated to take the spent fuel and/or high-level waste for storage or reprocessing. Because the University of Maryland has entered into such a contract with DOE the applicable requirements of the Waste Policy Act of 1982 have been satisfied.

1.8 FACILITY MODIFICATIONS AND HISTORY

Planning for the MUTR began in the mid 1950's. At that time, the University was initiating a program in Nuclear Engineering and it soon became obvious that for the program to succeed a nuclear reactor facility would have to be established. A research reactor would be able to serve many departments and a large variety of research programs at the University. Consequently in April 1959 the University applied to the United States Atomic Energy Commission (AEC) for a construction permit to build a 10 kW (thermal) pool type reactor on the main campus in College Park, Maryland. Construction of the facility was completed in 1960, and the AEC granted the University of Maryland an operating license (R-70) in October 1960. The first nuclear reactor in the State of Maryland went critical at 1:59 p.m. October 28, 1960.

In June 1969, the University of Maryland undertook a program for modernization of its nuclear reactor facility with a long-range goal of replacing the reactor with TRIGA-type fuel and controls for steady state operation at 250 kW (thermal). As the first step in the conversion, the AEC was petitioned for the issuance of a construction permit and amendment to license R-70 in order to construct a balcony on the west side of the reactor building and to replace the old control console and rod drive mechanisms with modern solid state TRIGA type controls. Permission was granted, and the construction was completed in March 1971. The second step was to replace the MTR fuel with TRIGA fuel. The AEC approved the amendment and the conversion was completed in June 1974. The new TRIGA fueled reactor went critical on June 18, 1974.

In 1992 the original Primary Coolant System cartridge filter failed. The filter was replaced in July 1992 with a sock-type filter. The Primary Coolant System piping was also modified at this time to place the filter after the pump to reduce cavitation in the pump impeller.

In 1993 the original parallel-flow, shell and tube, 100 kW exchanger developed a secondary to primary leak and was removed from service. It was replaced by a counter-flow, plate-type heat exchanger rated at 300 kW in April of that year.

In June 1993 a major redesign was done of the auxiliary instrumentation for the reactor. This instrumentation which resided in a vertical rack next to the console consisted of coolant system and bulk water instrumentation, radiation monitors, and controls for the pneumatic system. The radiation monitors and coolant instrumentation was moved from the vertical rack to an addition added to the top of the existing console. This was done to allow the operator to monitor coolant temperatures and flows and radiation levels without having to cease monitoring of the console instrumentation. Pneumatic system controls, intercom controls, and conductivity monitors remained in the old vertical rack. A NIM bin was added to this rack to allow for better experimental access to the consoles nuclear instrumentation.

From 1998 through 1999 a series of modifications and improvements were made to the facility's water handling systems and auxiliary information displays. The original secondary heat exchanger was removed from service as brining it online actually reduced heat removal from the primary coolant due to reduced flow in the primary heat exchanger. Additional temperature measurement devices were installed in the secondary system and displayed on the upper console. The sump system was completely rebuilt, a project which included painting the sump with a waterproof epoxy, replacing the holdup tank, replumbing the sump water handling systems, and adding particle filters to the sump discharge. Non safety-related instrumentation displays were reorganized to improve their visibility to the reactor operator.

2.0 SITE CHARACTERISTICS

2.1 GEOGRAPHY AND DEMOGRAPHY

2.1.1 Site Location and Description

2.1.1.1 *Specification and Location*

The site for the MUTR is in the northeastern quadrant of the University of Maryland campus located at College Park, Prince George's County, Maryland. The reactor is about 14 km northeast of the center of Washington, DC, and 6 km from the nearest point of the District of Columbia line. Specifically, the reactor is located at a latitude of 38 ° 59 ' 29 " N and a longitude of 76 ° 56 ' 19 " W which corresponds to UTM of Zone 18, Easting 332 100 m, and Northing 4 317 400 m. This information was obtained from the U.S. Census Tiger database [1].

The general terrain surrounding the reactor site is characterized by low, gently rolling hills. The reactor building is on the relatively flat portion of the campus near lower elevations. To the east the ground slopes slightly downward toward a shallow stream, Paint Branch, about 366 m away. The topology of the reactor site is shown in Figure 2.1.

2.1.1.2 *Boundary and Zone Area Maps*

The relative location of the MUTR within the campus is shown on the map of the University of Maryland College Park Campus, Figure 2.2: G-6. The reactor is located approximately 830 m from MD Highway 193 and 340 m from US Route 1. Figure 2.3 shows towns and residential areas adjacent to the reactor site. The reactor is located approximately 10 km from Interstate 495, Interstate 95, and the Baltimore-Washington Parkway. A MetroRail station is located approximately 2 km from the reactor. The nearest on-campus residence hall is approximately 230 m from the building housing the reactor. The nearest off-campus public residence is approximately 370 m from the building housing the reactor. Figure 2.4 shows the location of the MUTR within Prince George's County.

The MUTR facility is located the northwest wing of the Chemical and Nuclear Engineering Building (CHE), see Figure 2.5. The reactor site and operations boundaries are indicated by the dot shaded region. There are three buildings that surround the Chemical and Nuclear Engineering Building. Two of the buildings, J.M. Patterson and the Asphalt Institute, are of the same elevation as CHE. The other building, the Animal and Avian Sciences Building is approximately 10 m taller than CHE. All of the buildings including CHE have HVAC air handlers on the roof and exhausts for laboratory chemical hoods.

2.1.2 Population Distribution

The College Park campus of the University of Maryland has a peak daytime population (students, faculty, and other persons) of approximately 45 000. The distribution of people within the campus during working hours is summarized in Table 2.1. This is based on maximum occupancy expected for each university building during the academic year except for special occasions such as athletic events during which the campus population can reach 60 000 people. The average peak daytime population tabulated in Table 2.1 with use of Figure 2.1 permits a detailed analysis of the campus population distribution in all areas and directions immediately around the reactor building. The peak daytime population within approximately 457 m of the reactor building is 12 000. Figure 2.2 shows that the university is located generally within a high population-density suburban area of the greater metropolitan area north of Washington, DC.

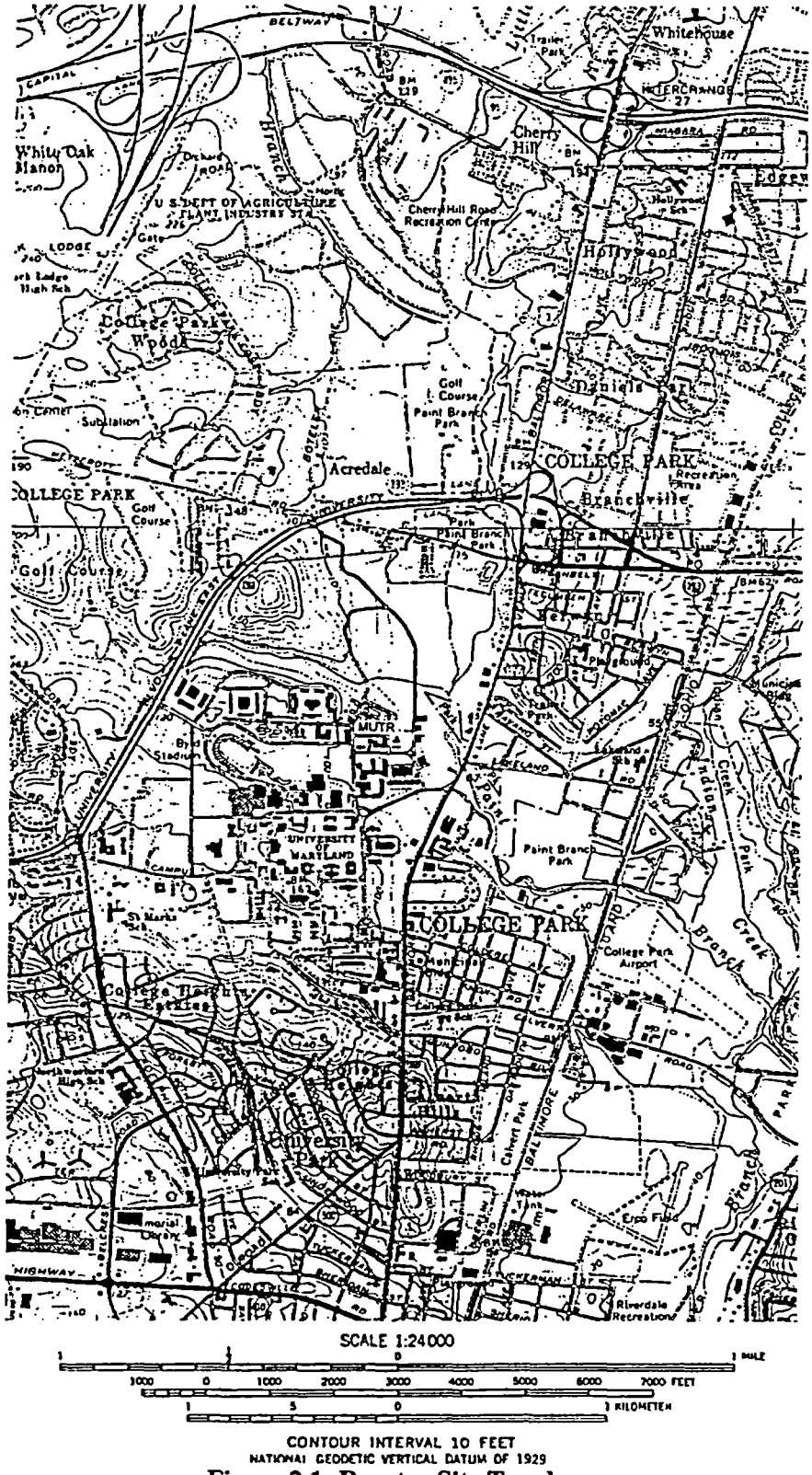

Figure 2.1: Reactor Site Topology

Last Updated March 28, 2000

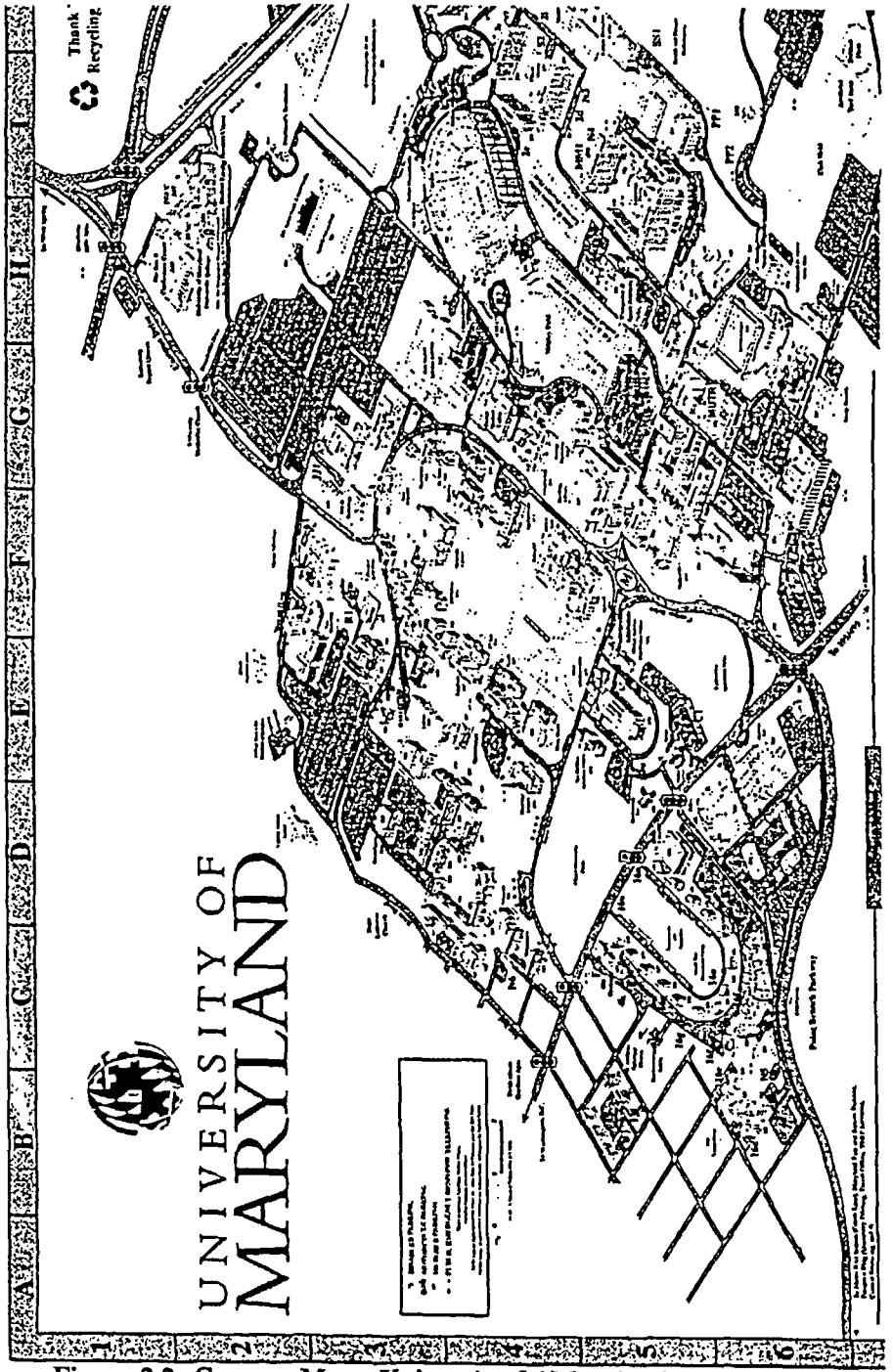

Figure 2.2: Campus Map - University Of Maryland, College Park

Last Updated March 28, 2000

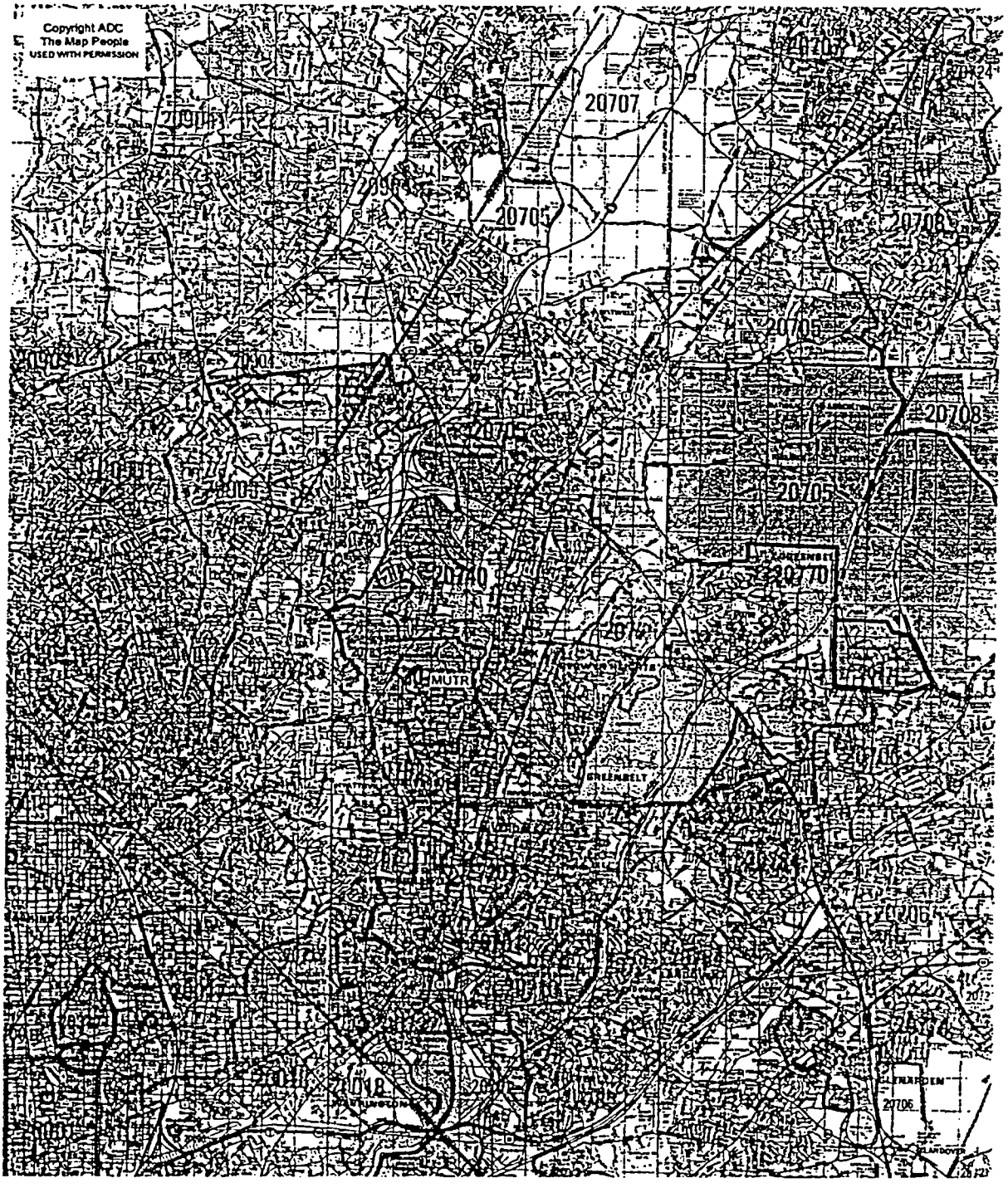

Figure 2.3: Regional Map

Last Updated March 28, 2000

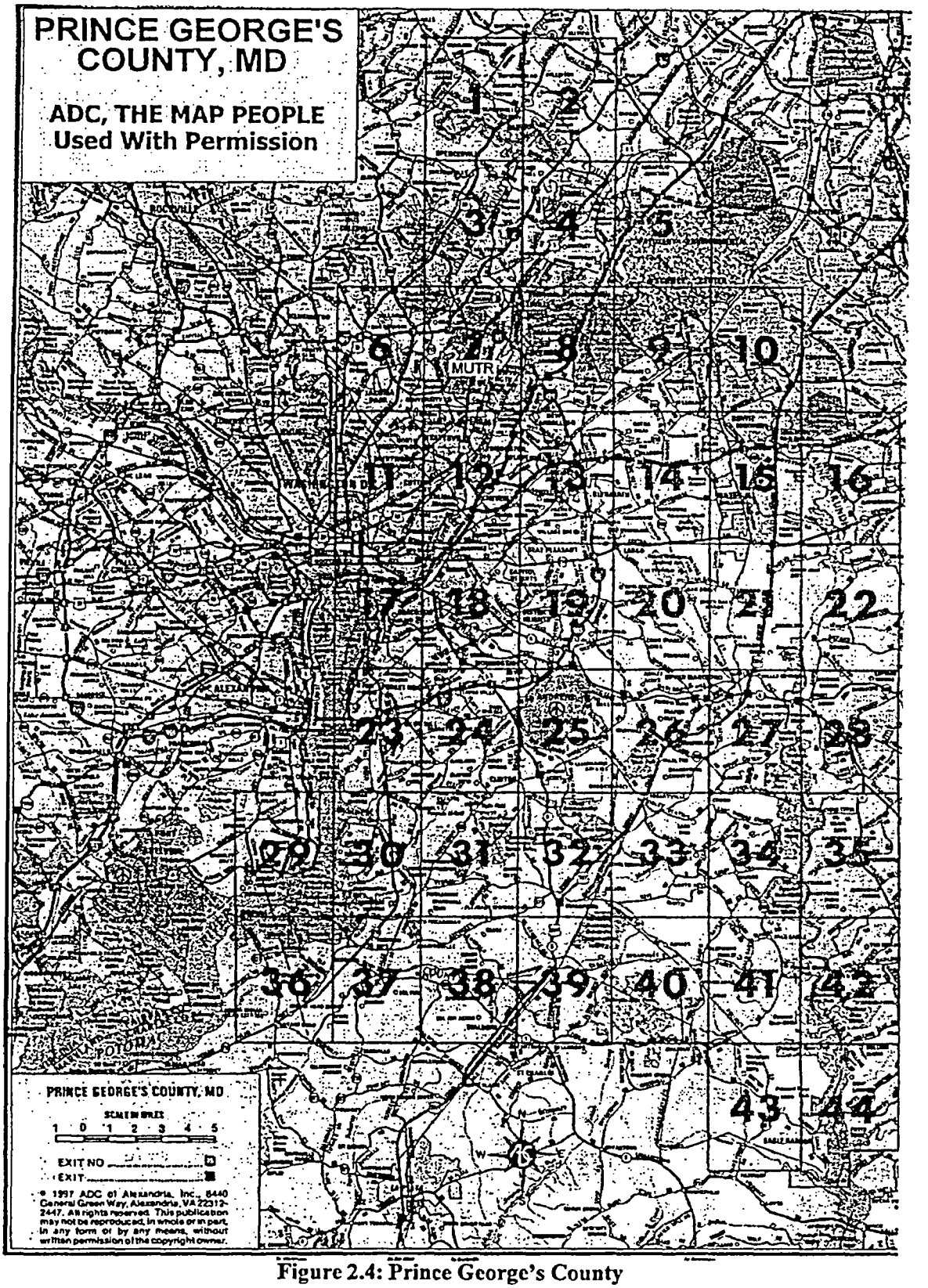

Figure 2.4: Prince George's County

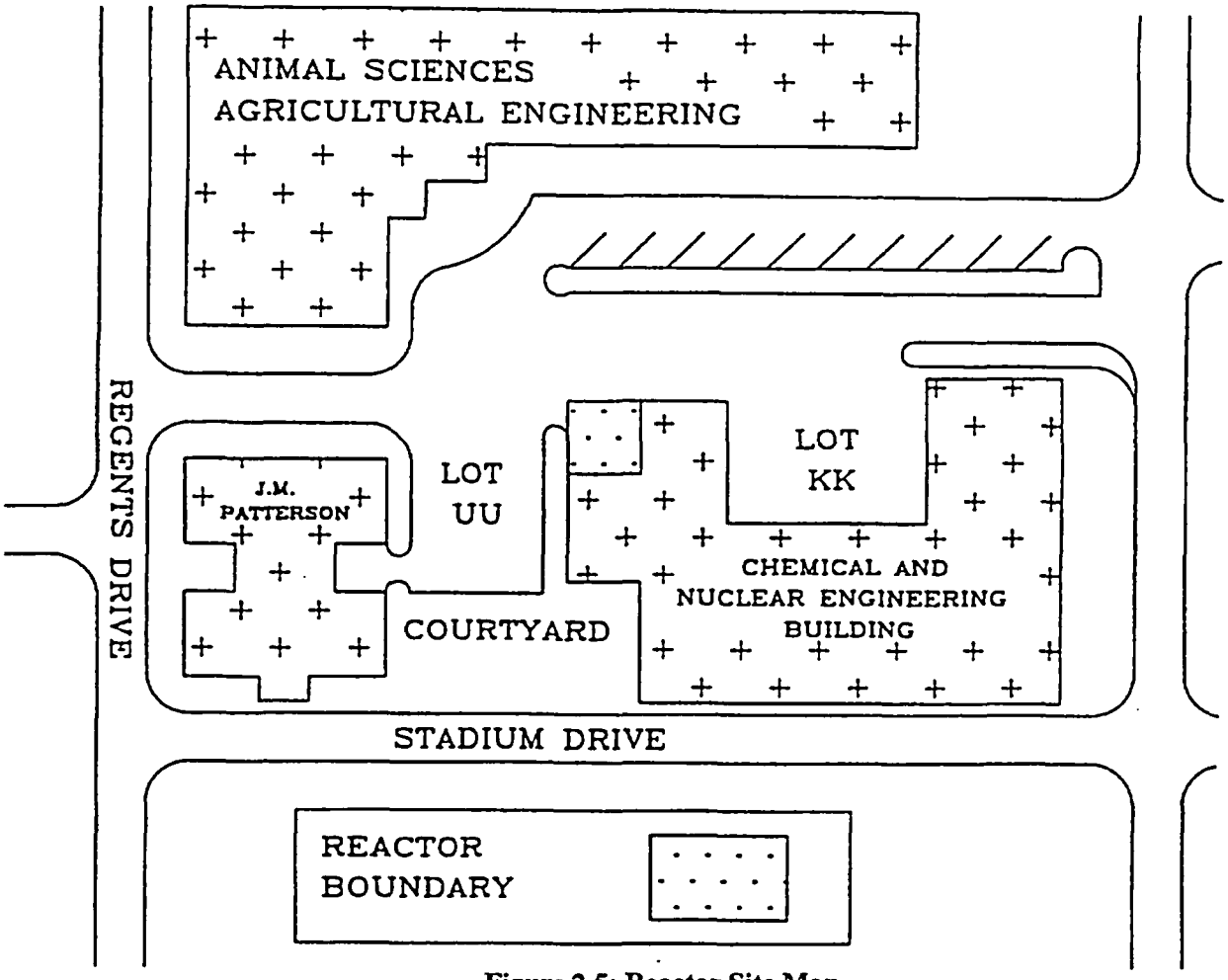

Figure 2.5: Reactor Site Map

Table 2.1: Estimated Population During Business Hours

Distance from Reactor (ft)	Total
0-500	3 000
500-1000	6 000
1000-1500	12 000

Figures 2.3 and 2.4 were used along with data from the U.S. Bureau of the Census [2,3,4] to generate population figures for the towns adjacent to the reactor. The July 1, 1998 projected population for Prince George's County, Maryland was 777 811. The average yearly growth rate in the projected population for Prince George's County, Maryland was 0.9 % for the 1998 projection. Applying this average growth rate to the regional population figure given above yields a projected population of 233 600 in 2000, 244 300 in 2005, and 279 400 in 2020 for the region within 6 km of the MUTR. The long-term results are conservative estimates of population growth as these regions are highly developed with few plots of land available for further development.

2.2 NEARBY INDUSTRIAL, TRANSPORTATION, AND MILITARY FACILITIES

2.2.1 Locations and Routes

There is little heavy industry near the MUTR. Approximately 4 km from the MUTR between College Park, MD, and Greenbelt, MD, lies an industrial park. A concrete mixing facility, a Washington Post printing press, and a scrap metal recycling firm are located in the park.

There are a number of transportation related facilities located near the MUTR. College Park, Hyattsville, and Greenbelt all have MetroRail stations and the College Park and Greenbelt stations are also served by the Maryland Area Rail Commuter trains (MARC). AmTrack and commercial freight lines also utilize the MARC tracks. The entire region surrounding the campus is served by MetroBus and the UM Shuttle service. There is no mass air transit facility near the MUTR.

The only military facilities located near the MUTR are Maryland National Guard facilities in Greenbelt.

2.2.2 Air Traffic

The city of College Park has a small, single runway airport that is approximately 1.5 km from the MUTR. The aircraft using this airport are almost exclusively primarily single or twin engine, privately owned aircraft, e.g. Piper Cub or Cessna type.

As a result of the proximity of the airport to campus, and the large degree of pleasure flying that occurs from the airport, aircraft from the airport do fly over the reactor building. However, it is not plausible that an aircraft crashing through the roof of the reactor building would have sufficient remaining momentum to cause significant damage to the pool tank and fuel. This conclusion is based on the effects of an airplane crash that occurred at the Maryland Fire and Rescue Research Institute located at the eastern edge of campus just beyond the College Park airport runway. In 1992, a small single engine plane crashed into the building's roof after takeoff. The building, which is of similar construction to CHE, suffered relatively minor structural damage.

2.2.3 Analysis of Potential Accidents at Facilities

None of the industrial facilities that are mentioned in Section 2.2.1 have any potential impact on the MUTR. They are sufficiently distant that a major fire at any of them would not impact the facility.

2.3 METEOROLOGY

College Park, Maryland lies at the western edge of the middle Atlantic coastal plain, about 80 km east of the Blue Ridge Mountains and 55 km west of the Chesapeake Bay. Station elevation is only 22 m above mean sea level in a region of slightly rolling terrain. The proximity of the ocean has a marked influence on the weather conditions.

2.3.1 General and Local Climate

Summers are warm and sometimes humid and the winters are mild. Especially pleasant weather prevails in the spring and autumn. The coldest weather occurs in late January and early February, with an average daily maximum temperature of 5.4 °C (41.8 °F) and an average daily minimum of –4.3 °C (24.2 °F). The warmest weather occurs in July, when daily high temperatures commonly exceed 30 °C (86 °F). There are

no well-defined wet and dry seasons. Snowfall is not common, and averages only about 43 cm (17 in) per winter season. During the summer, showers are frequent. Thunderstorms occur on about one of every five days. [5]

According to USDA measurements made in College Park [6], the warmest weather occurs, on the average, during the middle of July with maximum average daily temperature of 31.3 °C (88.3 °F). The record high temperature is 40 °C (104 °F). The coldest weather usually occurs in the late January and early February, when the maximum average temperature is 5.4 °C (41.8 °F) and the minimum average temperature is –4.3 °C (24.2 °F).

The normal annual precipitation is about 1.08 m (42.5 in). Because of a uniform moisture supply throughout the year, no well-pronounced wet or dry seasons are evident. Thunderstorms during the summer months often bring sudden and heavy rain showers. Most thunderstorms are not accompanied by high winds, although on June 9, 1992 a thunderstorm with wind gusts up to 44.7 m/s (100 mph) was recorded. The reactor site is somewhat protected from high winds by the higher grounds to the west. Two hailstorms have been recorded with the resultant damage of $100 000 or more; one April 1938 and the other in May 1953. Tornadoes occur rarely in the region, but three of them with resulting damage of $100 000 or more occurred, two in April 1932 and one in November 1927. In April 1973, a tornado struck in the vicinity of suburban Fairfax, Virginia, causing an estimated $15 000 000 damage.

Tropical disturbances occasionally influence the local weather with high wind and heavy rainfalls, but extensive damage from this cause has been rare. Three major hurricanes have been recorded. On October 15, 1954, Hurricane Hazel caused a peak gust of wind at 43.8 m/s (98 mph), but only 4.39 cm (1.73 in) of rainfall was recorded. On August 12 and 13, 1955, Hurricane Connie produced 16.8 cm (6.60 in) of rainfall. Flooding from the rains of Hurricane Agnes in 1973 caused an estimated $300 000 000 damage in Virginia, Maryland, Delaware, and the District of Columbia, but no significant damage at the site of the reactor.

Average annual snowfall is 45.2 cm (17.8 in) snow accumulations of more than 25 cm (10 in) from one storm are relatively rare. The greatest recorded snowfall from a single storm was 71 cm (28 in) accumulating in 2 days in January 1922, but snowfalls of this magnitude are extremely rare.

On the basis of the meteorological data presented in the licensee's SAR, the staff concludes that the meteorological conditions at the reactor site neither pose a significant risk of damage to the reactor nor render the site unacceptable for the facility.

2.3.2 Site Meteorology

During the course of the facility's license, site meteorology data can be obtained from a variety of sources. The University of Maryland, College Park, has a meteorology department that maintains a weather monitoring station on campus. The National Weather Service has a number of stations located throughout the D.C. metropolitan area, which can be accessed electronically through the World Wide Web. Lastly, WNBC Channel 4 maintains a real-time weather database, which is also accessible through the World Wide Web. One or more of these resources should be available at all times.

2.4 HYDROLOGY

The reactor site lies within the Middle Potomac-Anacostia-Occoquan watershed, USGS Cataloging Unit 02070010. There are 19 streams and rivers making up this watershed with the Chesapeake Bay the ultimate discharge site. [7] The principal streams within Prince George's County flow in a southerly direction and are tributary to either the Potomac River or the Chesapeake Bay. Figure 2.6 shows the location of the principal streams. [8]

From the reactor site surface, runoff can be expected to follow the gradual slope to the east toward Paint Branch about 366 m from the reactor building. A 48-in. storm-sewer system at the university leads to the east and terminates at Paint Branch in about the same location.

Paint Branch flows to the southeast and joins the Northeast Branch of the Anacostia River about 3.2 km (2 mi) from the reactor site. The Anacostia River flows into the Potomac River at Washington, D.C. In general, all streams within several miles of the university flow to the south and eventually join the Potomac River.

The sanitary sewer drainage system carries wastewater and sewage from the reactor building. It consists of an 8-in. sewer line, which joins a 15-in. line. From there, the sanitary sewer continues eastward for another 152 m where it joins the 36-in. trunk sewer belonging to the Washington Suburban Sanitary Commission. The Washington Suburban Sanitary Commission's lines feed into the District of Columbia's sewer lines and subsequently lead to the Blue Plains Treatment Plant along the Potomac River in Washington, DC.

The reactor site, the University of Maryland, and all surrounding towns are supplied with water from the facilities of the Washington Suburban Sanitary Commission. This water is obtained from the Patuxent River upstream of Laurel, Maryland, about 16 km northeast of the reactor site and is treated at the Patuxent Filtration Plant in Laurel. No drainage from the vicinity of the reactor site leads into this water supply system.

2.4 HYDROLOGY

The reactor site lies within the Middle Potomac-Anacostia-Occoquan watershed, USGS Cataloging Unit 02070010. There are 19 streams and rivers making up this watershed with the Chesapeake Bay the ultimate discharge site. [7] The principal streams within Prince George's County flow in a southerly direction and are tributary to either the Potomac River or the Chesapeake Bay. Figure 2.6 shows the location of the principal streams. [8]

From the reactor site surface, runoff can be expected to follow the gradual slope to the east toward Paint Branch about 366 m from the reactor building. A 48-in. storm-sewer system at the university leads to the east and terminates at Paint Branch in about the same location.

Paint Branch flows to the southeast and joins the Northeast Branch of the Anacostia River about 3.2 km (2 mi) from the reactor site. The Anacostia River flows into the Potomac River at Washington, D.C. In general, all streams within several miles of the university flow to the south and eventually join the Potomac River.

The sanitary sewer drainage system carries wastewater and sewage from the reactor building. It consists of an 8-in. sewer line, which joins a 15-in. line. From there, the sanitary sewer continues eastward for another 152 m where it joins the 36-in. trunk sewer belonging to the Washington Suburban Sanitary Commission. The Washington Suburban Sanitary Commission's lines feed into the District of Columbia's sewer lines and subsequently lead to the Blue Plains Treatment Plant along the Potomac River in Washington, DC.

The reactor site, the University of Maryland, and all surrounding towns are supplied with water from the facilities of the Washington Suburban Sanitary Commission. This water is obtained from the Patuxent River upstream of Laurel, Maryland, about 16 km northeast of the reactor site and is treated at the Patuxent Filtration Plant in Laurel. No drainage from the vicinity of the reactor site leads into this water supply system.

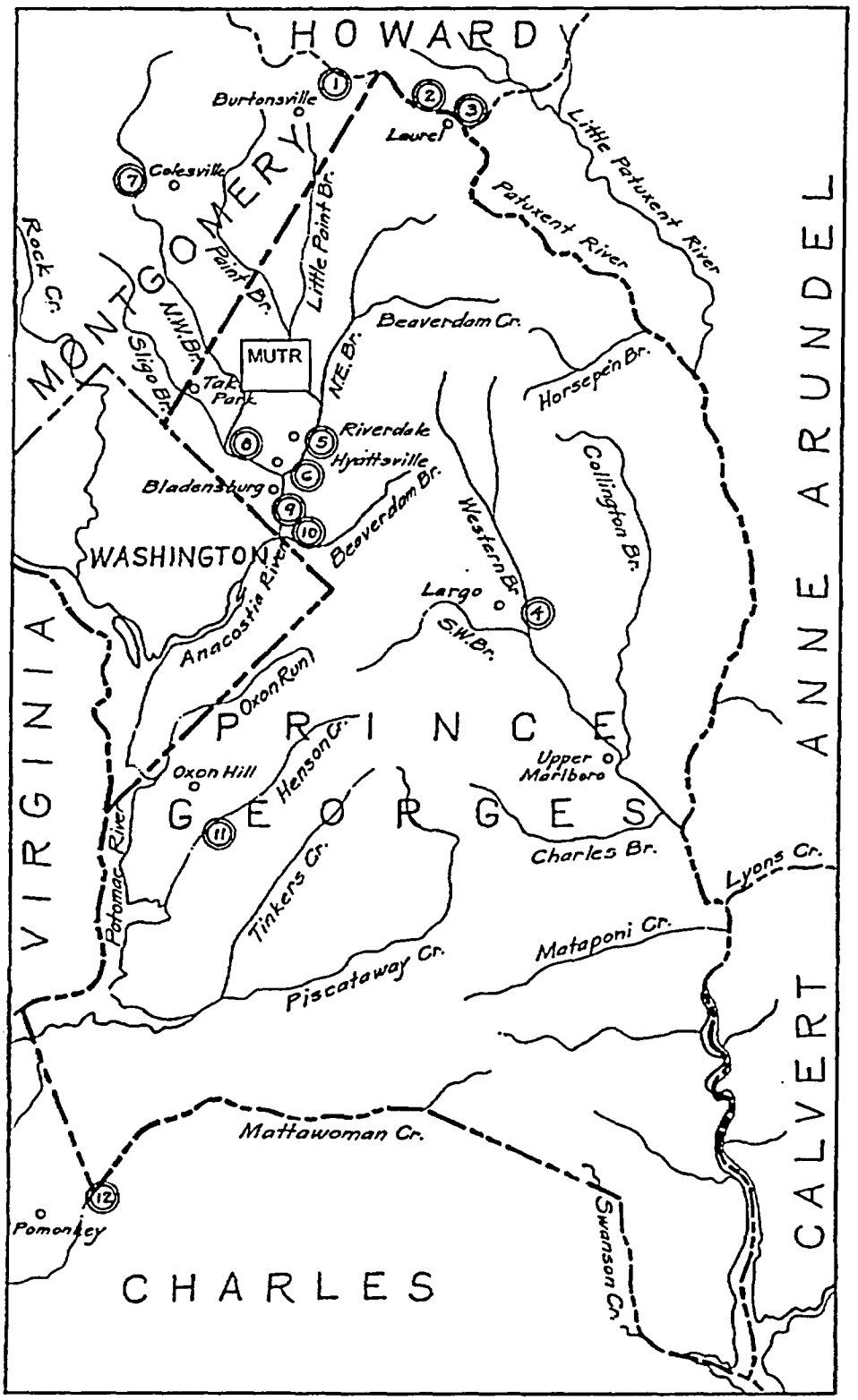

Figure 2.6: Principal Streams Near Reactor Site

2.5 GEOLOGY, SEISMOLOGY, AND GEOTECHNICAL ENGINEERING

2.5.1 Regional Geology

The site is underlain by about 61 m of soils belonging to the Potomac Group of Lower Cretaceous age, principally the Patuxent Formation overlain by a thin layer of Arundel clay. Precambrian igneous and metamorphic basement rocks underlie the Patuxent Formation. The basement is exposed at the surface at the Fall Zone, a few km west of the site, and its surface slopes to the east. The overlying Coastal Plain strata dip toward the east and thicken in that direction. Many faults have been mapped in the Piedmont west of the Fall Zone where the basement outcrops or is exposed in excavations. It is likely that similar faults are present in the basement beneath the site. Most of these faults are several hundred million years old and do not penetrate the overlying Coastal Plain sediments such as the Patuxent Formation and Arundel clay at the site. However, several faults have been mapped within a radius of 80 km of the site that do offset Coastal Plain strata [9-12]. These faults were evaluated by the NRC during licensing activities for several nuclear power reactor sites such as Douglas Point, Summit, Hope Creek and North Anna and found to be noncapable within the meaning of Appendix A to 10 CFR Part 100.

The Patuxent Formation is predominantly white, yellow, gray, and brown sand interbedded with sandy clay. It is this layer that contains appreciable amounts of water, yielding several hundred gallons a minute to drilled wells. Arundel clay is a reddish brown material that is not an important water-bearing formation. Its porosity is high but its water permeability is quite low. Locally the sediments have been indurated by calcium carbonate and iron oxide, which results in an unusually low porosity.

2.5.2 Seismicity

The earthquake risk in the District of Columbia and Maryland is characterized as a seismic risk zone where only minor earthquake damage may be expected. Historically there have been 47 earthquakes within or about the state of Maryland. The largest of these had a maximum Modified-Mercalli intensity (MMI) of V. The earliest recorded earthquake in Maryland occurred in Annapolis in 1758. Maryland was in the felt zone for the great earthquake series of 1811-1812, which was centered in Missouri. The most severe earthquake recorded in Virginia history (Giles County, 1897) shook most of Maryland. An earthquake centered near Luray, Virginia, in 1918 was reported felt in College Park. A single felt report was received from West Hyattsville, Maryland, in 1969 associated with a minor earthquake near Elgood, West Virginia. The Charleston, South Carolina, earthquake of 1886 was reported to have had an MMI of IV to V in the College Park area. The Lancaster earthquake of 1988 was felt in Maryland and was estimated to have an MMI of V in the northeastern part of the state. [13]

The staff concludes that the history of infrequent earthquake activity and damaging earthquakes near the site in recorded history support the conclusion that the risk of seismic-induced hazards to the MUTR is not significant.

2.5.3 Maximum Earthquake Potential

The USGS estimates that the maximum earthquake potential for the region including the reactor site is less than 8 % of normal earth gravitational force over the next fifty years with 98 % confidence. [14]

2.5.4 Vibratory Ground Motion

The USGS estimates that the maximum vibratory ground motion for the region including the reactor site is approximately 6 % g at 1.0 s spectral acceleration, 15 % g at 0.3 s, and 18 % g at 0.5 s over the next fifty years with 98 % confidence. [14]

2.5.5 Surface Faulting and Liquefaction Potential

There are no known surface faults near the MUTR facility that have caused earthquakes.

Given the very low potential for ground acceleration and the lack of local surface faulting. The staff believes that the potential for liquefaction to cause significant damage to the facility is minimal.

2.6 REFERENCES

1. Tiger Mapping Service. http://tiger.census.gov. U.S. Census Bureau. (1998)
2. http://www.census.gov/population/estimates/county/co-98-1/98C1_24.txt. U.S. Census Bureau. (March 1, 1999)
3. http://www.census.gov/population/estimates/metro-city/scful/SC98F_MD-DR.txt. U.S. Census Bureau. (June 30, 1999)
4. Maryland Census Tracts and Block Numbering Maps. 1990 U.S. Census of Population and Housing. U.S. Census Bureau. (1990)
5. "Local College Park Climate." http://meto.umd.edu/LOCAL/climate.html. Department of Meteorology, University of Maryland, College Park. (1999)
6. ftp://ftp.wcc.nrcs.usda.gov/support/climate/wetlands/md/24033.txt. USDA. (1999)
7. Watershed Environmental Profile. http://www.epa.gov/surf2/hucs/02070010/. U.S. Environmental Protection Agency. (July 1, 1999)
8. Cook, Charles W. Geology and Water Resources of Prince George's County. State of Maryland Department of Geology, Mines, and Water Resources. Bulletin 10. (1952)
9. Darton, N.H. "Configuration of the Bedrock Surface of the District of Columbia and Vicinity." USGS Professional Paper 217. (1950)
10. Dryden Jr., A.L. "Faults and Joints in the Coastal Plain of Maryland." Washington Academy of Sciences Journal. 22:1, pp. 469-472. (1932)
11. Jacobeen Jr., F.H. "Seismic Evidence for High-angle Reverse Faulting in the Coastal Plain of Prince Georges and Charles Counties, Maryland." Information Circular 13. Maryland Geological Survey. (1972)
12. Mixon, R.B. and W.L. Newell. "Preliminary Investigation of Faults and Folds Along the Inner Edge of the Coastal Plain in Northeastern Virginia." USGS Open-File Report 76-330. (1976)
13. Reger, James P. "Earthquakes and Maryland." State of Maryland Department of Natural Resources. http://mgs.dnr.md.gov/esic/brochures/earthquake.html. (1995)
14. USGS Geologic Hazards Team. National Seismic Mapping Project. http://www.geohazards.cr.usgs.gov/eq/cgi-bin/zipcode.cgi. (1999)

3.0 DESIGN OF STRUCTURES, SYSTEMS, AND COMPONENTS

3.1 DESIGN CRITERIA

The MUTR is located in its own building, referred to the Reactor Building, which is adjacent and connected to the Chemical and Nuclear Engineering Building. The Reactor Building was designed and built to meet or exceed building codes existing at the time of construction.

The Reactor Building has a steel frame and concrete walls and floors. The overall dimensions of the building are: 15.24 m (50 ft) long, 14.02 m (46 ft) wide, and 7.92 m (26 ft) tall, and includes a penthouse that extends the length (north-south) of the building. The penthouse is 12.50 m (41 ft) in length, 6.10 m (20 ft) in width, with walls of transite attached to a steel frame. The penthouse provides an additional height of 3.51 m (11.5 ft) over the reactor. The free air volume of the Reactor Building is 1710 m^3.

Figures 3.1 through 3.4 show the plan and elevation views of the Reactor Building.

The Reactor Building is designed to function as a confinement-type structure, providing for a controlled release of any airborne radioactive material. The outside ventilation system of the building consists of two roof mounted exhaust fans and two motor operated air intake louvers. The fans and louvers are operated from the control room and other locations in the building. The fans are capable of exhausting 2.83 m^3/s (6000 cfm) of air to the roof vents, which are located 7.32 m (24 ft) above ground level. The two motor operated air intake louvers, mounted on the west wall of the building, allow intake air only.

Air from the west balcony exhausts into the Reactor Building through two additional motorized louvers and one air conditioner in the pneumatic transfer system laboratory.

An area radiation detector monitors air exhausted from the west exhaust fan. In the event of an indicated high level of airborne radioactive material, the ventilation system is secured automatically (all fans stop and all louvers close).

The reactor core is at the bottom of a water filled aluminum tank. The tank is 2.13 m (7 ft) in diameter, 6.48 m (21.25 ft) in height, and contains approximately 22.7 m^3 (6000 gal) of water. There is a minimum of 5.33 m (17.5 ft) of water above the top of the fuel. The tank is surrounded by concrete, which serves, along with the water, as biological shielding. At core level, there is a minimum of 0.61 m (2 ft) of water and 1.98 (6.5 ft) of concrete on all sides. This concrete thickness extends to 2.44 (8 ft) above the core centerline. For 0.61 m (2 ft) above this, the concrete thickness is 1.52 m (5 ft), and then has a thickness of 0.91 m (3 ft) to the top of the core tank. There is no excavation underneath the reactor.

Figure 3.1: East-West Cross-Sections of Reactor Building

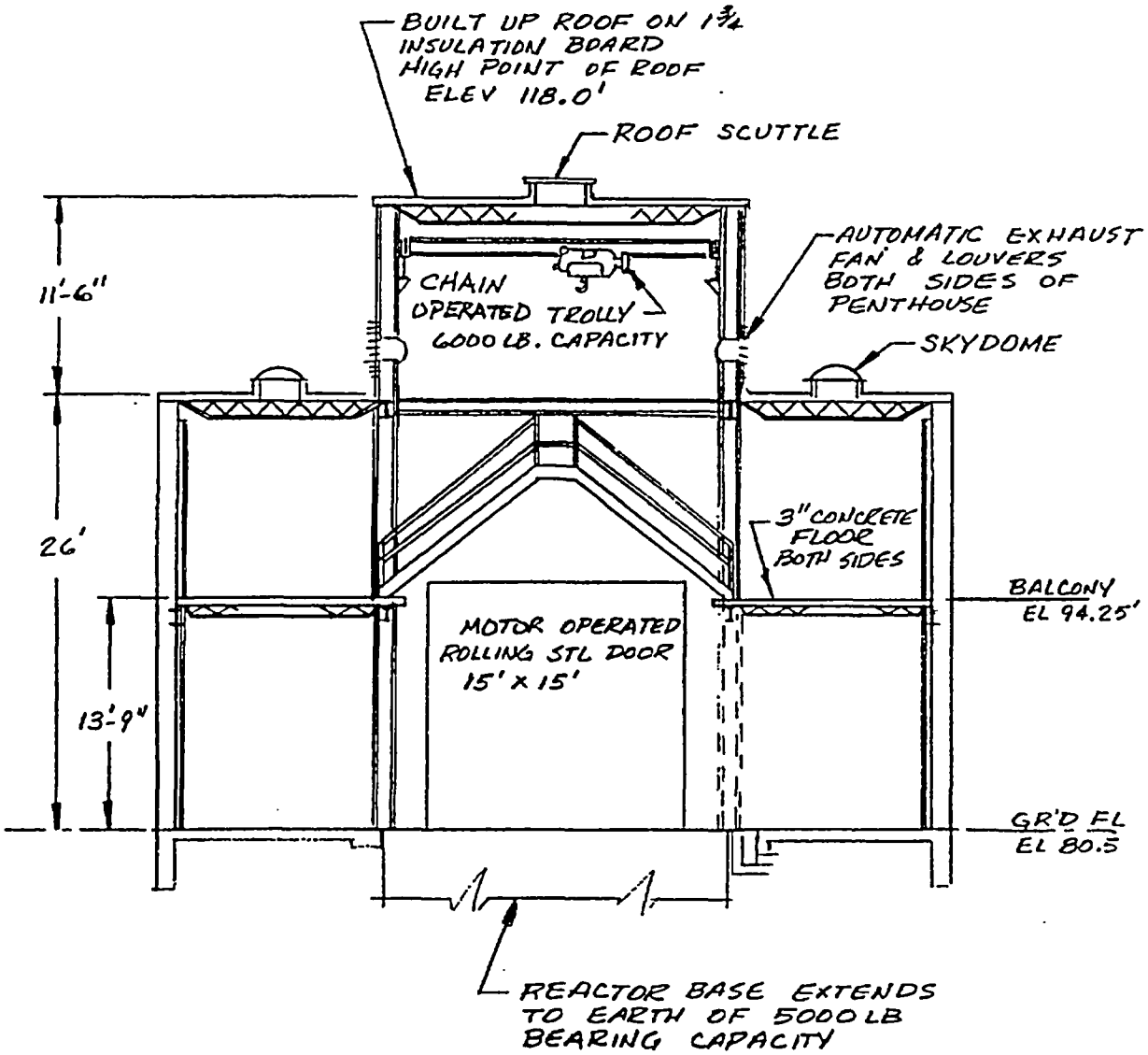

Figure 3.2: North-South Cross-Section of Reactor Building

Figure 3.3: Top View of Reactor Building Balcony Level

Figure 3.4: Top View of Reactor Building Lower Level

3.2 METEORLOGICAL DAMAGE

The Washington metropolitan area experiences very few extreme wind conditions such as tornadoes or inland hurricanes, see Section 2.5. Furthermore, the reactor building is constructed of a steel frame and poured concrete walls and floor, with a brick facing on the walls, and the aluminum reactor tank is embedded in a poured concrete biological shield that is faced with steel plates in the lower regions. On

the basis of the above information, the staff concludes that wind or storm damage to the MUTR reactor facility is very unlikely.

3.3 WATER DAMAGE

The reactor building is situated near the bottom of a gently sloping terrain, but well above the flood plain. Therefore, the staff concludes that there is reasonable assurance that significant damage to the reactor because of flooding is not likely enough to render the site unsuitable as the location of the reactor.

3.4 SEISMIC DAMAGE

The information on past seismic activity and the likelihood of future earthquake in the Washington, D.C., area indicate that the MUTR is located in a region of low probability of severe seismic activity. In the event of an earthquake causing catastrophic damage to the reactor building and/or the reactor pool, water might be released. However, Section 14 of this SAR shows that loss of coolant in the MUTR does not lead to core damage, and mechanical damage to fuel cladding would release only a small fraction of the fission product inventory. On the basis of these considerations, the staff concludes that the risk of radiological hazard resulting from seismic damage to the reactor facility is not significant.

3.5 SYSTEMS AND COMPONENTS

The mechanical systems important to safety are the neutron-absorbing control rods suspended from the reactor superstructure. The motors, gearboxes, electromagnets, switches, and wiring are all above the level of the water and readily accessible for visual inspection, testing, and maintenance. A preventive maintenance program has been in effect for many years at the MUTR to ensure that operability of the reactor systems is in conformance with the performance requirements of the Technical Specifications.

The recent history of operation of the MUTR indicates few malfunctions of electromechanical systems, no persistent malfunction of any one component, and most malfunctions were one of a kind (i.e., few repeats). (See Inspection Reports and licensee reports to the Commission.) On the basis of the above that continued operation of the MUTR facility will not increase the risk to the public.

4.0 REACTOR DESCRIPTION

4.1 SUMMARY DESCRIPTION

The MUTR is an open pool type reactor with a maximum licensed, steady state, thermal power of 250 kW. There is no pulsing capability. The reactor is fueled with 24 modified TRIGA fuel clusters. The reactor core consists of a total of [redacted] fuel rods – [redacted] fuel clusters each contain [redacted] fuel rods, [redacted] fuel cluster contains [redacted] fuel rods and an instrumented fuel rod, and the remaining [redacted] assemblies each contain [redacted] fuel rods and a control rod guide tube. The fuel-moderator rods are enriched to <20 w/o in ^{235}U, and each of the fuel rods contains a top and bottom slug of graphite which act as reflectors. Additionally, two graphite reflector elements are positioned in the assembled core, adjacent to two of the outer fuel assemblies.

The MUTR is light water cooled and moderated, and the water also serves as a neutron reflector and biological shielding. The reactor is cooled by natural convection. The Reactor Coolant and Purification System circulates the reactor coolant through a filter and demineralizer to maintain required water chemistry. The System also provides a flow path through a heat exchanger, which is cooled by city water, if forced convection cooling is desired.

The reactor contains five experimental facilities. The graphite filled thermal column provides an ex-core beam of thermal neutrons for experiments. Large samples, up to approximately 13.3 cm (5.25") in diameter, can be placed adjacent to the core in either the beam tubes (two) or the through tube. The beam and through tubes can also provide ex-core gamma and neutron beams. Finally, in-core irradiations of small samples (maximum size of approximately 2.5 cm (1") diameter by 5 cm (2") in length) can be done using the pneumatic transfer system.

4.2 REACTOR CORE

4.2.1 Reactor Fuel

4.2.1.1 *Fuel Moderator Elements*

The MUTR utilizes TRIGA fuel-moderator elements, which are identical to the standard TRIGA fuel element with the same fuel-moderator specifications, except that the diameter is made slightly smaller, 3.58 cm (1.41 in), to maintain proper metal-to-water ratio in the core. The top and bottom end fittings have been modified to fit into a cluster that is fixed into the existing MUTR grid plate.

The zirconium hydride moderator is homogeneously combined with partially enriched uranium fuel. The fueled section of these fuel-moderator elements, which measures 38.1 cm (15 in) in length and 3.48 cm (1.37 in) in diameter, contains approximately [redacted] of the net weight in uranium enriched to <20 w/o in ^{235}U. The hydrogen-to-zirconium atom ratio of the fuel-moderator material is about 1.7 to 1. To facilitate hydriding a 4.57 mm (0.18 in) diameter hole is drilled through the center of the active section. A zirconium rod is inserted in this hole after hydriding is complete. As shown in Figure 4.1, graphite slugs, 8.76 cm (3.45 in) in length and 3.48 cm (1.37 in) in diameter, act as top and bottom reflectors.

The active fuel section and the top and bottom graphite slugs are contained in a 0.51 mm (0.020 in) thick stainless-steel can. The stainless-steel can is welded to the top and bottom end fittings. The approximate overall weight of the element is 16.6 kg, and the ^{235}U content is 35 g. Serial numbers scribed on the top end of the fixtures or spacer blocks are used to identify individual fuel elements.

4.2.1.2 *Instrumented Fuel Element*

One of the fuel elements has three thermocouples embedded in the fuel. As shown in Figure 4.2, the three sensing tips of the fuel element thermocouple are embedded off center near the vertical center line at the center of the fuel section and one inch above and below the center. The thermocouple leadout wires pass through a seal contained in a 1/2 inch-OD stainless-steel tube welded to the upper end fixture. This tube projects about 7.6 cm (3 in) above the upper end of the element and is extended by 6.1 m (20 ft) of 1/2-inch-OD tubing connected by Swagelok unions to provide a watertight surface in the reactor pool. In all other respects, the instrumented fuel rod is identical to the standard fuel element.

4.2.1.3 *Four Rod Fuel Cluster*

The 4-rod fuel cluster concept, as shown in Figure 4.3, was developed to provide a simple means for converting MUTR-type reactors to TRIGA-fuel reactors. The 4-rod cluster consists of an aluminum bottom, 4 stainless steel clad fuel rods and aluminum top handle.

The bottom adapter, Figure 4.4, is designed to fit into and rests on the existing MUTR-type grid plate which provides vertical support and spacing. The top of the adapter contains four tapped holes into which the fuel rods are threaded. The bottom end fitting on the fuel rod, Figure 4.5, is provided with a flange at the base of the threads so that the fuel rod seats firmly on the adapter and is rigidly supported in cantilever fashion.

The top handle of the cluster, Figure 4.6, serves as a lifting fixture and a spacer for the upper ends of the fuel rods. A sliding fit is provided between the top handle and the fuel rod upper end fittings to accommodate differential expansion. A stainless-steel locking plate fastens the top handle to the fuel elements.

4.2.1.4 *Instrumented Fuel Cluster*

Temperature measuring instrumentation is provided in the core by installing [redacted] in a cluster with three standard fuel rods. The [redacted] other fuel rods. [redacted]

4.2.1.5 *Control Rod Fuel Cluster*

To accommodate a control rod, one fuel rod in a cluster is replaced by a control rod guide tube that has the same outside diameter and screw end bottom fitting as a fuel rod. The aluminum handle and locking plate on the control rod cluster was modified to accommodate the guide tube.

4.2.2 Control Rods

Reactivity control is achieved by the operation of the control rod and drive assembly. The drive assembly, Figure 4.7, consists of a drive mechanism, a tubular barrel, connecting rod assembly and the control rod. All three motor driven control rods are used to control and adjust the reactor power level

4.2.2.1 *Control Rod Construction*

Three control rods are used to perform the function of reactivity control in the reactor. Each control rod, Figure 4.8, is 43.2 cm (17 in) in length and contains borated graphite, B_4C, in powder form. The top and bottom fittings are welded to an aluminum can which has a cladding thickness of 0.71 mm (0.028 in). The completed welded can is helium leak tested before B_4C is poured into the can through a sinkhole in the

bottom fitting. The top fitting is threaded to accommodate a connecting rod extending from the fuel lattice to the rod drive mechanism mounted on the Reactor Bridge Support Structure.

The position of the rods in the reactor core is shown in Figure 4.9.

4.2.2.2 *Control Rod Drive Mechanism*

The Control Rod Drive (CRD) mechanism, Figure 4.10, used for positioning the control rod, is an electric motor actuated linear rack equipped with a magnetic coupler. The individual drives are mounted on the Reactor Bridge Support Structure. The lower end of each drive housing terminates in a flange to which the drive is bolted.

The drives are capable of inserting and withdrawing a control at a slow, constant controlled rate for reactor power level adjustment. An electronic braking mechanism on the drive allows the control rod to be locked at 0.381 cm (0.15 in) increments over the 38.1 cm (15 in) of total travel of the control rod. Indication is provided for each rod that shows that the down limit and the up limit are reached. Individual rod position for each rod is displayed in digital form in 0.1 % intervals.

4.2.2.3 *Components*

Figures 4.11 through 4.14 illustrate the drive in detail. Following are descriptions of the main components of the drive and their functions:

DRIVE MOTOR: A 110V, 60 Hz, two-phase motor which drives a pinion gear and a 10-turn potentiometer.

POTENTIOMETER: Mounted on the opposite side of the drive motor, the potentiometer is connected to the drive motor shaft to provide rod position indications.

ELECTROMAGNET: Mounted on the lower end of the draw tube, the electromagnet engages an iron armature that screws into the end of a connecting rod which terminates at its lower end in the control rod.

TUBULAR BARREL: The magnet armature and upper portion of the connecting rod are housed in the tubular barrel that extends from the drive main block to below the water line. The upper portion of the barrel is well ventilated to allow free movement of the piston in the water.

PISTON: The piston, equipped with a stainless steel piston ring, is located part way down the connecting rod in the tubular barrel. The purpose of the piston is to restrict the free fall movement of the control rod during a scram. Water in the ventilated barrel will restart in the piston, cushioning bottoming impact of the control rod.

ROD DOWN LIMIT SWITCH: A spring-loaded pull rod extends vertically through a housing and up through the block. This rod terminates at its lower end in an adjustable foot that protrudes through a window in the side of the barrel. The foot is placed so that it is depressed by the armature when the connecting rod is fully lowered. Raising the rod releases the foot, allowing the pull rod to be driven upward by the force of the compression spring. The top of the pull rod terminates in a fixture that engages the actuating lever on a microswitch. As a result, the microswitch reverses position according to whether or not the armature (and control rod) is at its bottom limit. This microswitch is the rod down limit switch.

MAGNET UP LIMIT SWITCH: A push rod extends down through the block into the upper portion of the barrel. It is arranged to engage the top surface of the magnet assembly when the magnet draw tube is raised to its upper most position. The upper end of the push rod is fitted with an adjustment screw that engages the actuator of a second microswitch. Thus, this microswitch reverses position according to whether the magnet is at or below its full up position. This microswitch is the magnet up limit switch.

MAGNET DOWN LIMIT SWITCH: A bracket, fitted with an adjustment screw, is mounted on top of the magnet draw tube. A third microswitch is arranged so that its actuating lever is operated by the adjustment screw on the bracket. The switch will thus reverse position according to whether the magnet draw tube is at or above its completely depressed position. This microswitch is the magnet down limit switch.

OPERATION: Clockwise (as viewed from the shaft end of the motor) rotation of the motor shaft rotates the pinion, thus raising the magnet draw tube. If the magnet is energized, the armature connecting rod will rise with the draw tube, so that the control rod is withdrawn from the reactor core. The piston moves up with the connecting rod. In the event of a reactor scram, the magnet will be de-energized and will release the armature. The connecting rod, piston and control rod will then drop, reinserting the control rod into the reactor. Since the upper portion of the barrel is well ventilated, the piston will move freely through this range. However, when the connecting rod is within 5 cm (2") of the bottom of its travel, the piston is restrained by the dash-pot action of the restricted ports in the lower end of the tubular barrel. This restraint cushions the bottoming impact.

4.2.3 Neutron Moderator and Reflector

The MUTR has four types of neutron moderator and reflectors. The first is the reactor pool water that is used for both moderator and coolant. The second is in the form of graphite slugs located above and below the fuel region of each TRIGA fuel element, see Figure 4.1. The third are two aluminum encapsulated graphite blocks located in grid positions D2 and E2, see Figure 4.9. The final reflector is the thermal column experimental facility, Section 10.2. None of the last three reflectors are chemically reactive with water; however, failure of the thermal column encapsulation would create a leak in the reactor pool tank.

4.2.4 Neutron Startup Source

The source holder is an anodized aluminum rod assembly with a cavity to contain the neutron source. The dimensions of this assembly permit it to be installed in any of the fuel locations in the core, but it generally occupies one of the outer most positions. A 2.3 mm (0.093 in) diameter hole is drilled through the top end fitting. This permits a long string to be looped through for ease of handling.

The source holder is cylindrical with a small shoulder at the upper end. This shoulder supports the assembly of the upper grid plate, the rod itself extending down into the core region. The rod clears the lower grid plate by about 1.27 cm (1/2 in). The neutron source is contained in a cavity in the lower portion of the rod assembly and is located approximately at the vertical center of the core.

4.2.5 Core Support Structure

The core is supported vertically by a single aluminum grid palate with a 9 x 6 pattern of 5.72 cm (2.25 in) diameter holes; grid spacing is 9.700 cm (3.189 in) x 7.709 cm (3.035 in). The fuel elements are kept in alignment by the close fit between the fuel element cluster end adapters and the sockets in the grid plate. The grid plate is 12.7 cm (5 in) thick, 73.7 cm (29 in) long, 46.7 cm (18.375 in) wide, and sits 33.0 cm (13 in) off the bottom of the pool tank. The grid plate is shown in Figure 4.15.

4.3 REACTOR TANK

The reactor pool tank (see Figure 4.16) has a capacity of 22.7 m^3 (6000 gal) of water. The tank is made of 3/8 in plate on the sides and ½ aluminum plate on the bottom. It is 2.13 m (7 ft) in diameter and 6.48 m (21.25 ft) high. There is a minimum of [redacted] of water above the active section of the core acting as a biological shield.

There are five flanged nozzles on the tank. Four are for the beam tubes and through tube and the fifth is for the thermal column. The tank also incorporates a fuel storage rack, grid plate support structure, the reactor bridge and its supports, and the inlet, outlet, and overflow pipes.

The reactor pool tank is made of Al 6061 T6 and has an empty weight of 1200 kg (2650 lbs).

The bridge support structure, Figure 4.17, provides support for all in core detectors, control rod drives start up source mechanism, diffuser pipes, pool water instrumentation, and pneumatic tubes.

4.4 BIOLOGICAL SHIELD

The biological shielding consists of ordinary concrete, steel plates and water. The pool tank and the reactor structure provide a minimum of 0.61 m (2 ft) of water and 1.98 m (6.5 ft) of concrete on all sides of the core. This thickness extends from floor level to 3.35 m (11 ft) above the floor, or 2.44 m (8 ft) above the core centerline. For 0.61 m (2 ft) above this, the concrete shield if 1.52 (5 ft) thick and then 0.91 (3 ft) thick to the top of the reactor tank. The core is shielded on the top by a minimum of 5.33 m (17.5 ft) of water. There is no basement or excavation under the reactor; therefore, no special shielding is needed there.

Radiation from the core trough the center of the thermal column is shielding by 0.953 cm (3/8 in) of water, 0.635 cm (1/4 in) of aluminum, 1.50 m (59 in) of graphite, 0.318 cm (1/8 in) of boral, a layer of lead bricks, 2.54 cm (1 in) of steel, and 1.05 (41.375 in) of concrete.

Radiation through the center line of a beam port from the core is shielded by 30.54 cm (12 in) of water, 0.635 cm (1/4 in) of aluminum, 0.318 cm (0.125 in) of boral, 1.47 m (58 in) of concrete, 10.16 cm (4 in) of lead, and 5.08 cm (2 in) of steel.

4.5 NUCLEAR DESIGN

In this subsection the basic design characteristics of the MUTR core will be discussed.

4.5.1 Normal Operating Conditions

The MUTR is fueled by [redacted] fuel moderator elements with [redacted] of the elements as described in 4.2.1.1 and [redacted] instrumented element as described in 4.2.1.2. The elements are grouped into [redacted] bundles with [redacted] element bundles as described in 4.2.1.3, [redacted] bundle containing [redacted] standard elements and [redacted] instrumented element as described in 4.2.1.4, and [redacted] bundles containing [redacted] elements and [redacted] control rod guide tube as described in 4.2.1.5. The bundles are arranged in a 6x4 array on a 9x6 array grid plate, plate discussed in 4.2.5. One bundle along the width of the core is shifted on grid position to accommodate the pneumatic transfer system terminus described in 10.2.4. The core is reflected by two graphite filled canisters, see 4.2.3, and the graphite lined thermal column, see 10.2.1, and moderated by light water. A schematic of the core configuration can be found in Figure 4.9. This compact configuration is the only planned configuration for the core.

The current core has an excess reactivity of approximately $1.40 at room temperature. Considering that the power coefficient of reactivity, see Section 4.5.2, is -0.53 ¢/kW, the reactor is not capable of achieving a steady state power greater than 300 kW, 120 % of licensed power. At this power level, fuel temperatures will be well below the safety limit of 1000 °C with a peak temperature of less than 400 °C.

Additional positive reactivity could be created by the insertion of experiments or the flooding of experimental facilities. Reactivity additions due to flooding of the experimental facilities is analyzed in Section 13.2.2.1 with the conclusion that there is no potential for core damage due to such an event. Limits on experiments limit any single experiment to less than $1.00 of reactivity, and limits on excess reactivity are far less than $3.50 in excess reactivity. The rapid addition of reactivity is therefore limited to $1.00. The accident analysis in Section 13.2.2.3 analyzed the addition of $3.70 to the reactor while operating at 250 kW. This accident scenario is significantly worse than the rapid addition of $1.00, and the analysis concluded that the safety limit would not be exceeded.

4.5.2 Reactor Core Physics Parameters

The MUTR has a prompt neutron lifetime of 3.9×10^{-5} s and an effective delayed neutron fraction, β_{eff} of 0.007. With a delayed neutron lifetime of 12.5 s the mean neutron lifetime for the MUTR is 88 ms.

The measured values for the coefficients of reactivity for the fuel, the moderator, and reactor power are -1.2 ¢/ °C, +3.0 ¢/°C, and -0.53 ¢/kW respectively. Note that the fuel and the overall power coefficient are negative.

Experimentally measured values of the neutron flux show a peak thermal flux in the pneumatic transfer system of 4×10^{12} n/cm^2·s, a peak fast flux of 2×10^{12} n/cm^2·s, and a peak epithermal flux of 7.5×10^{10} n/cm^2·s.

4.5.3 Operating Limits

The MUTR in its current, and only, configuration uses three independent control rods to control the reactor. The total reactivity of the control rods is nominally $8.00 with the reactor requiring the nominal removal of $6.60 to bring the reactor to low power critical with the pool water and fuel at room temperature. This results in an excess reactivity of $1.40 at room temperature with no experiments. The nominal reactivity worths of the control rods are Regulating Rod: $2.30, Shim I: $2.70, and Shim II: $3.00.

From the above it is obvious that without experiments the insertion of any two of the three control rods will bring the reactor subcritical. With Shim II fully withdrawn and the other two rods fully inserted the reactor will be subcritical by more than $3.00. Technical Specifications limits the excess reactivity of the MUTR to $3.50 with reference to the cold critical condition. With this limitation and Shim II fully withdrawn, the reactor would still be subcritical by $0.90. This is almost twice the required shutdown margin of $0.50. To ensure that the reactor is capable of achieving a safe shutdown, annual calibrations of the control rods followed by computations of excess and shutdown reactivities will be performed. Given the typical MUTR operation history, this time period is sufficient to track any changes that may be caused by fuel burnup.

The design of the control rod drive mechanism greatly limits the possible withdrawal speed of a control rod. Therefore, in the event of a control system malfunction, the rate of reactivity addition would be far slower than that experienced by TRIGA reactors operating in pulse mode. Thus, the reactivity addition by a control system malfunction, which is a much milder transient than a pulse, would not be able to

cause fuel damage. The other possible method of rapid reactivity addition is via the failure of an experiment. However, the limit on experiments of less than $1.00 of reactivity is far less than pulses that have been performed with TRIGA fuel. This will be addressed in detail in Section 13.2

Since the reactor is fueled with TRIGA fuel, the Safety Limit for the MUTR is for a maximum fuel temperature of 1000 °C. This has been shown through operations experience and testing by General Atomics to be below the point at which cladding failure due to hydrogen dissociation from the zirconium hydride becomes likely. To preclude reaching this point the Limiting Safety System Setting for the MUTR has been defined as less than 175 °C as measured by the instrumented fuel element. This setpoint is over 50 °C above the temperature measured with the pool water at room temperature.

4.6 THERMAL HYDRAULIC DESIGN

The MUTR is designed for natural convection cooling. While a heat exchanger is present in the primary water system, it is not necessary for safe operation of the reactor. Operations experience has shown that at full power with the reactor pool water at room temperature, 20 °C, that the measured fuel temperature in the instrumented fuel element is less than 120 °C. Since the measurement point is on the core periphery, the centerline temperature is therefore less than 300 °C. If the pool water were to somehow approach the boiling point of water, 100 °C, the maximum fuel temperature would approach 400 °C, well below the safety limit of 1000 °C.

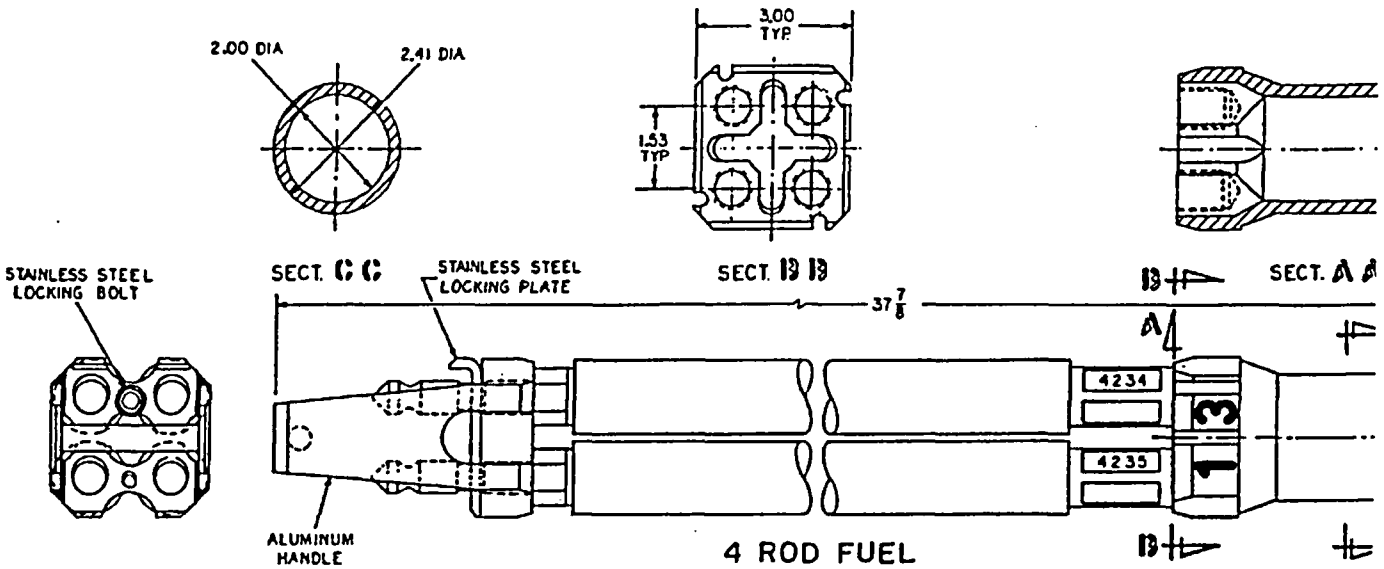

4 ROD FUEL ELEMENT ASSEMBLY

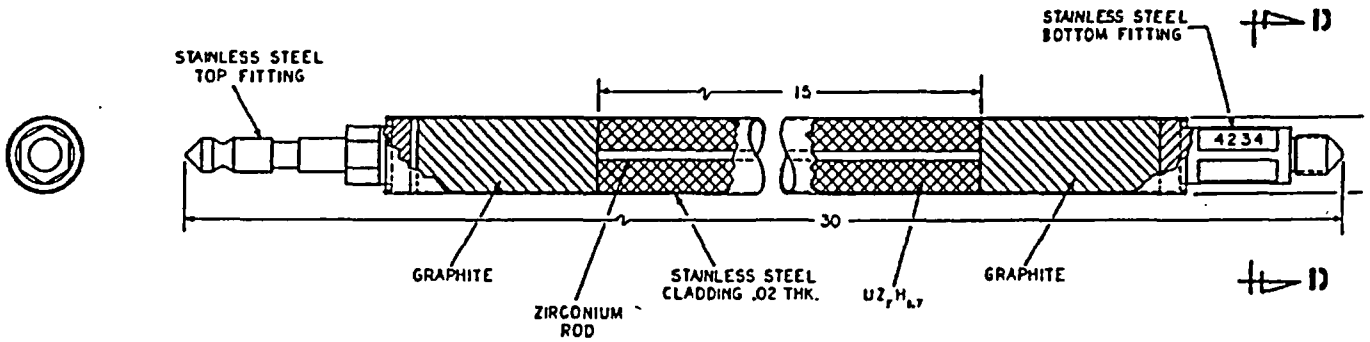

TRIGA FUEL ROD ASSEMBLY

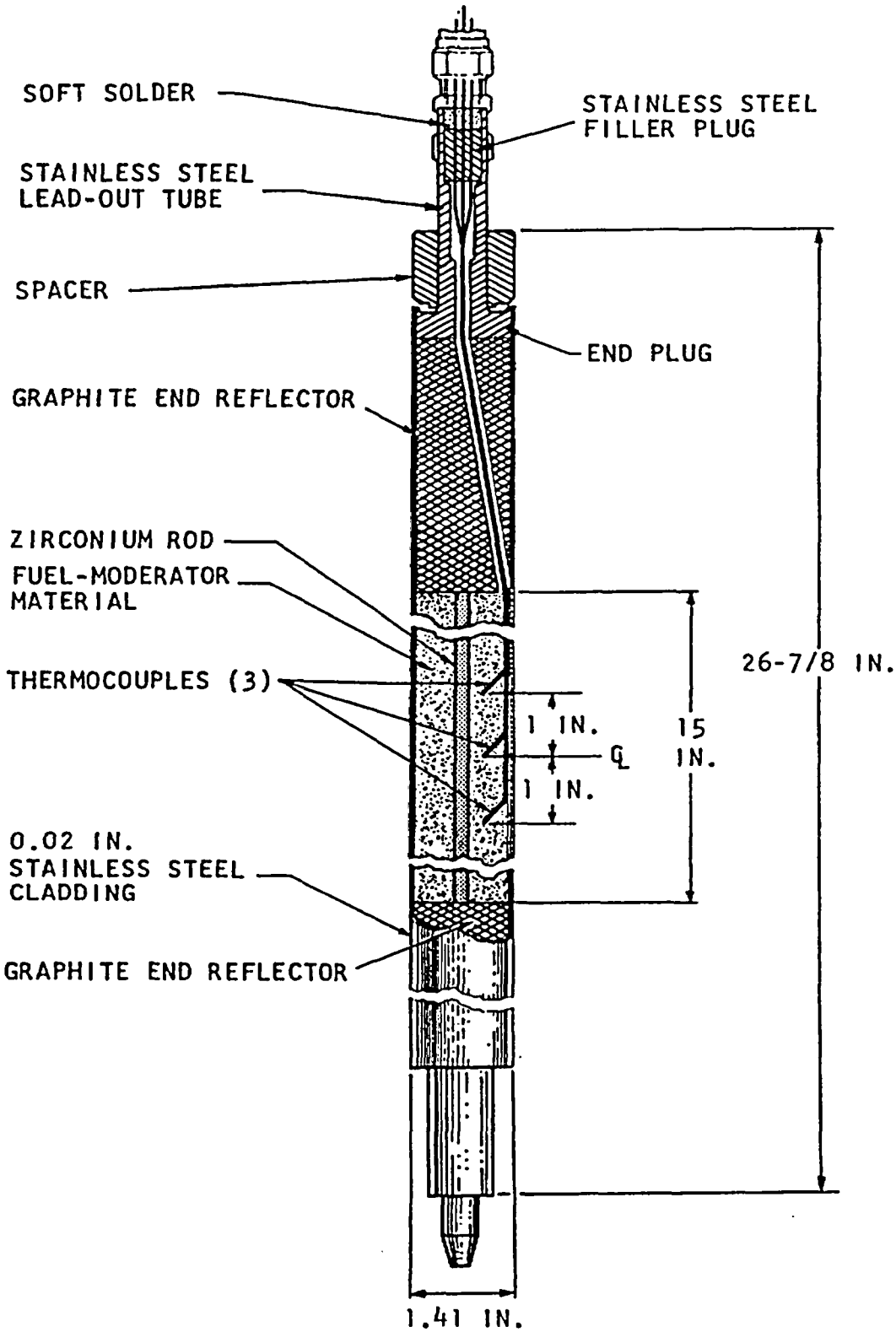

Figure 4.2: Instrumented Fuel-Moderator Element

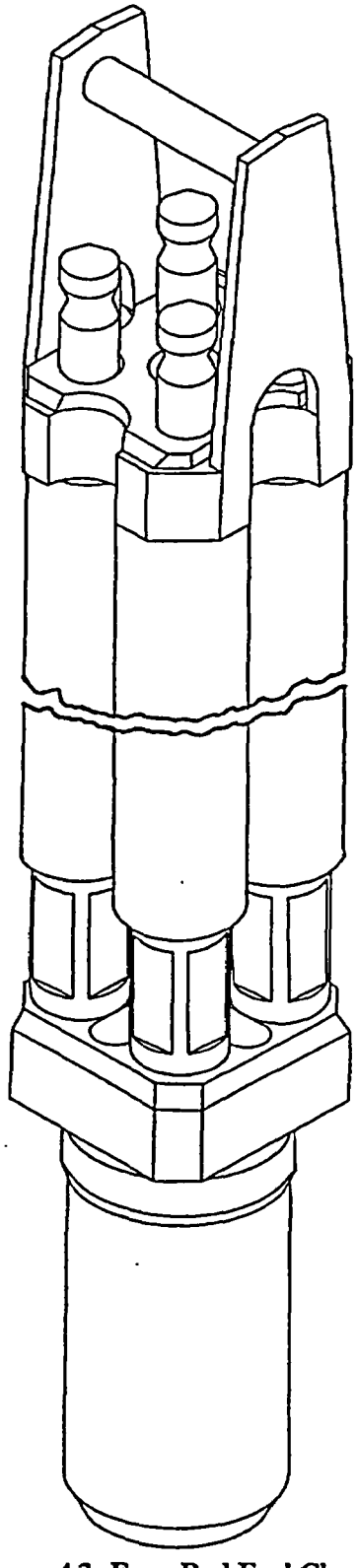

Figure 4.3: Four-Rod Fuel Cluster

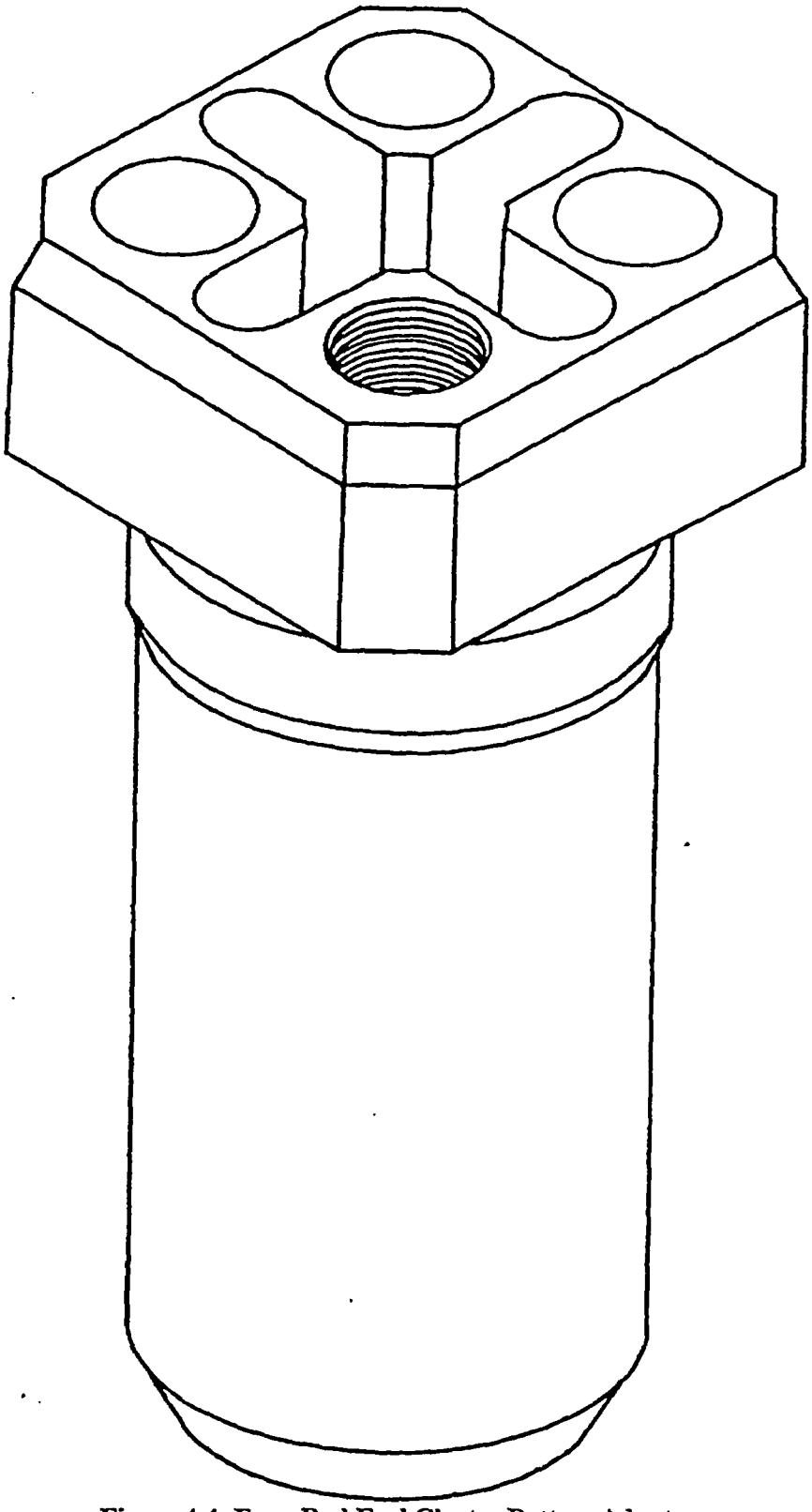

Figure 4.4: Four-Rod Fuel Cluster Bottom Adapter

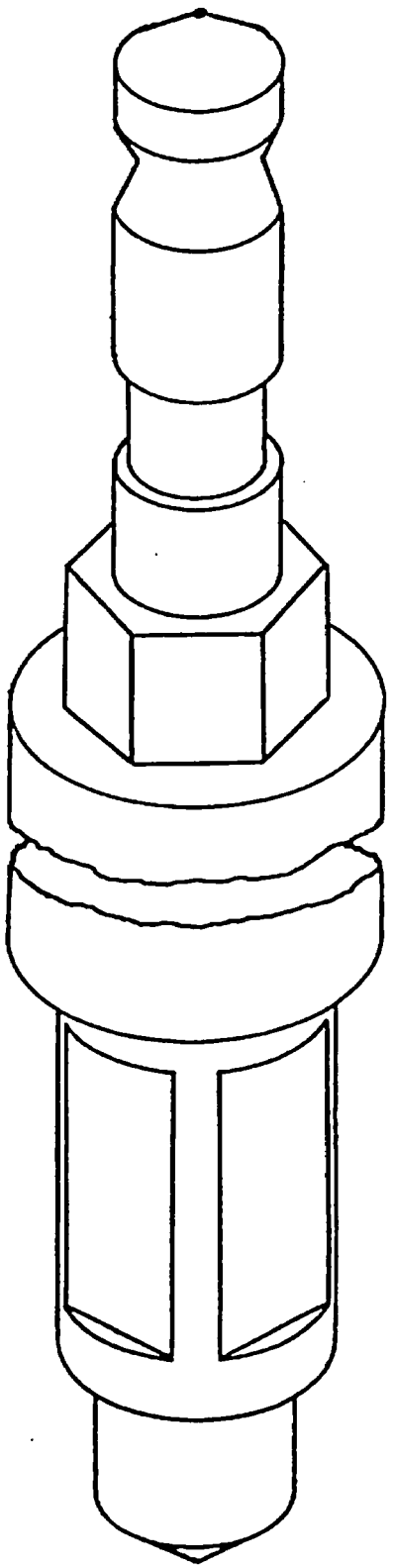

Figure 4.5: Fuel-Moderator Element End Fittings

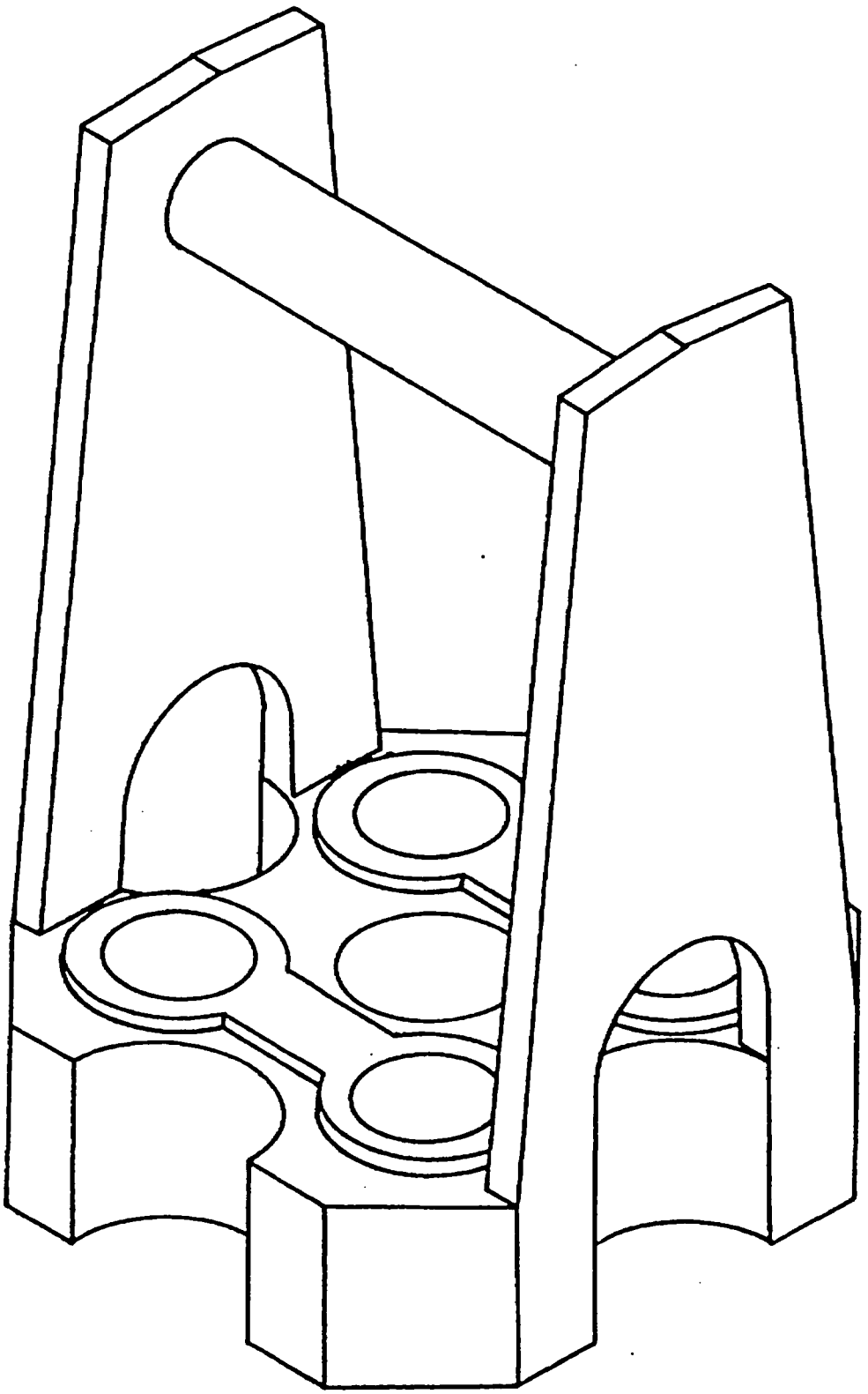

Figure 4.6: Four-Rod Fuel Cluster Top Handle

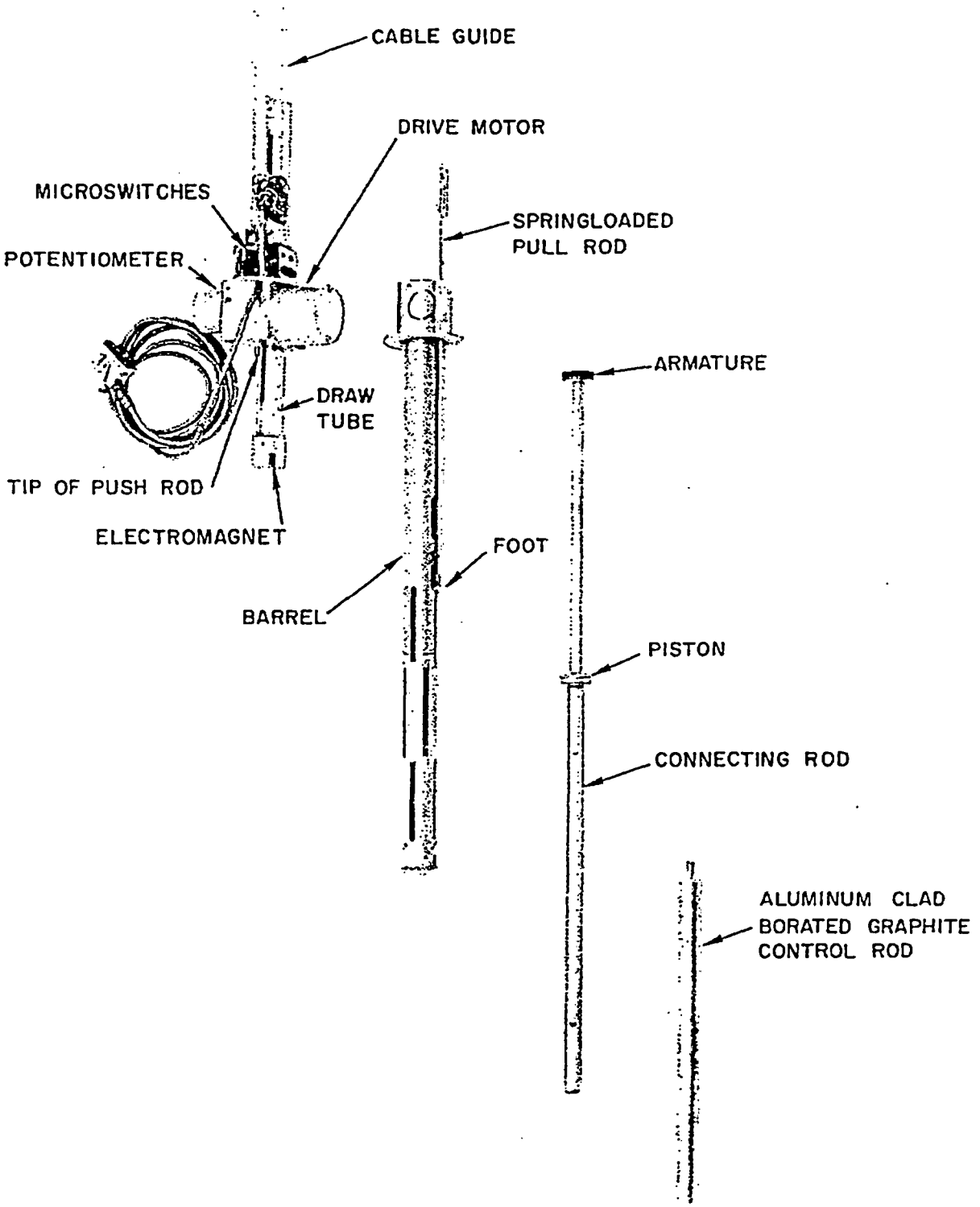

Figure 4.7: Control Rod Drive Assembly

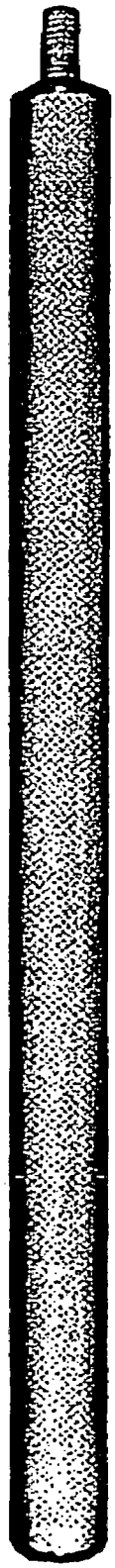

Figure 4.8: Borated Control Rod

Figure 4.9: Core Layout

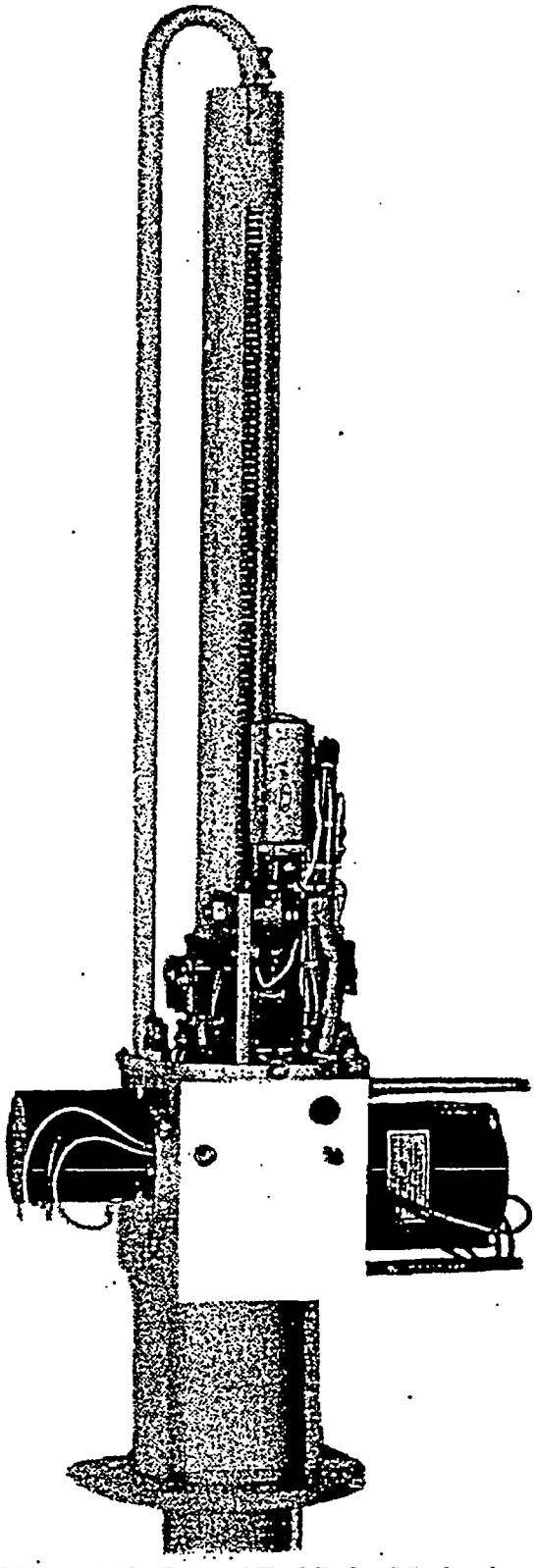

Figure 4.10: Control Rod Drive Mechanism

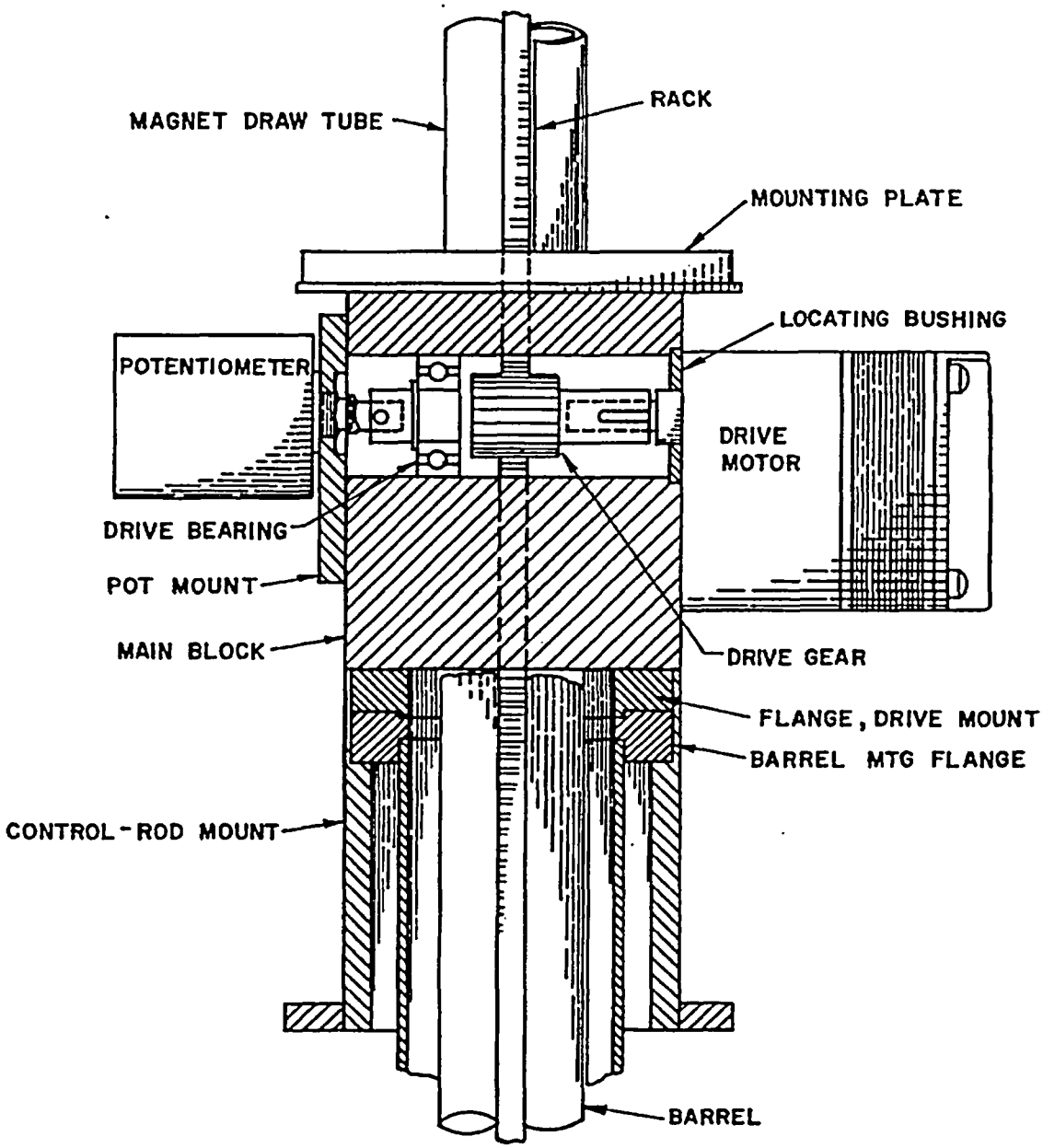

Figure 4.11: Control Rod Drive Motor Details

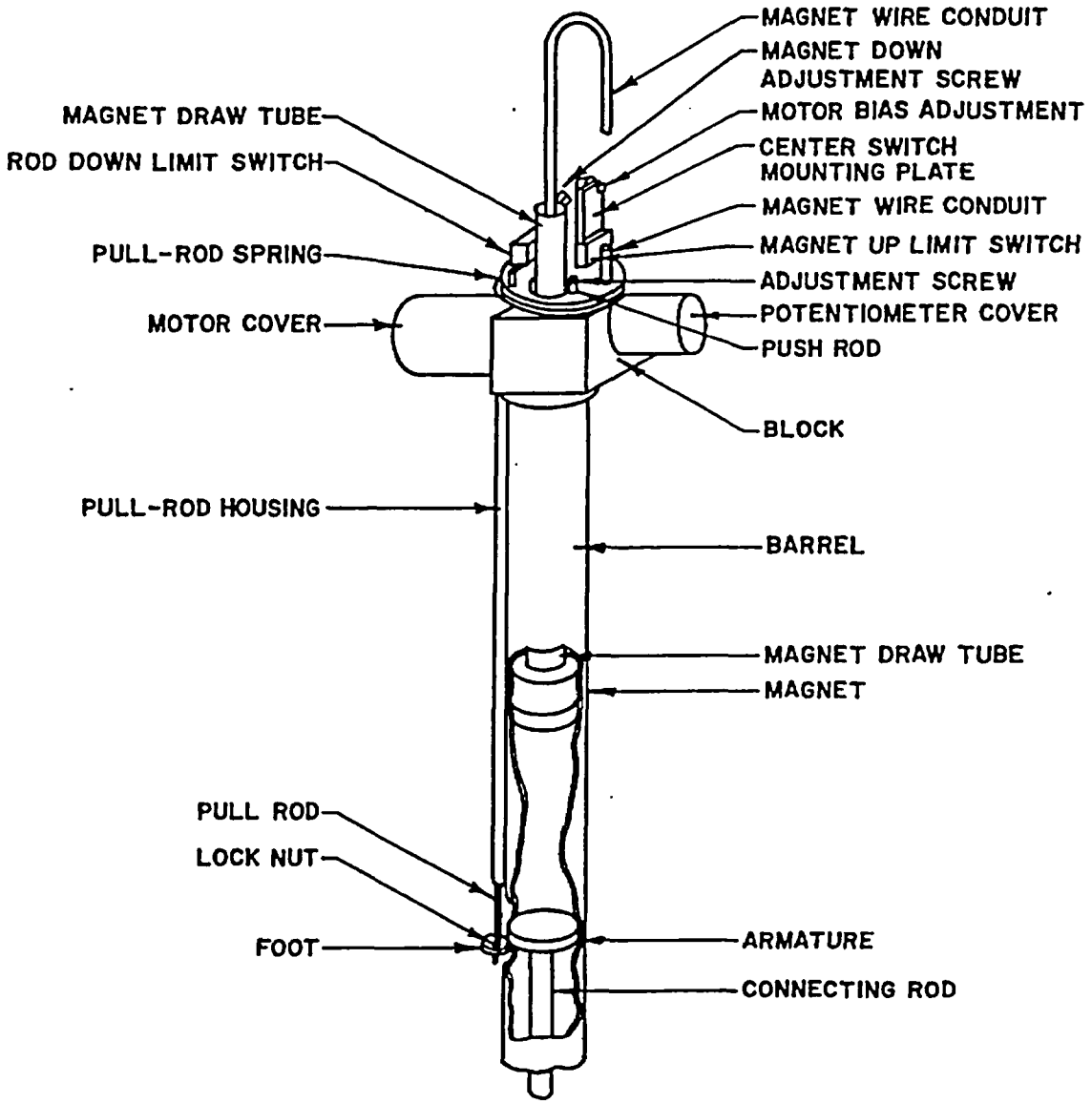

Figure 4.12: Control Rod Draw Tube Details

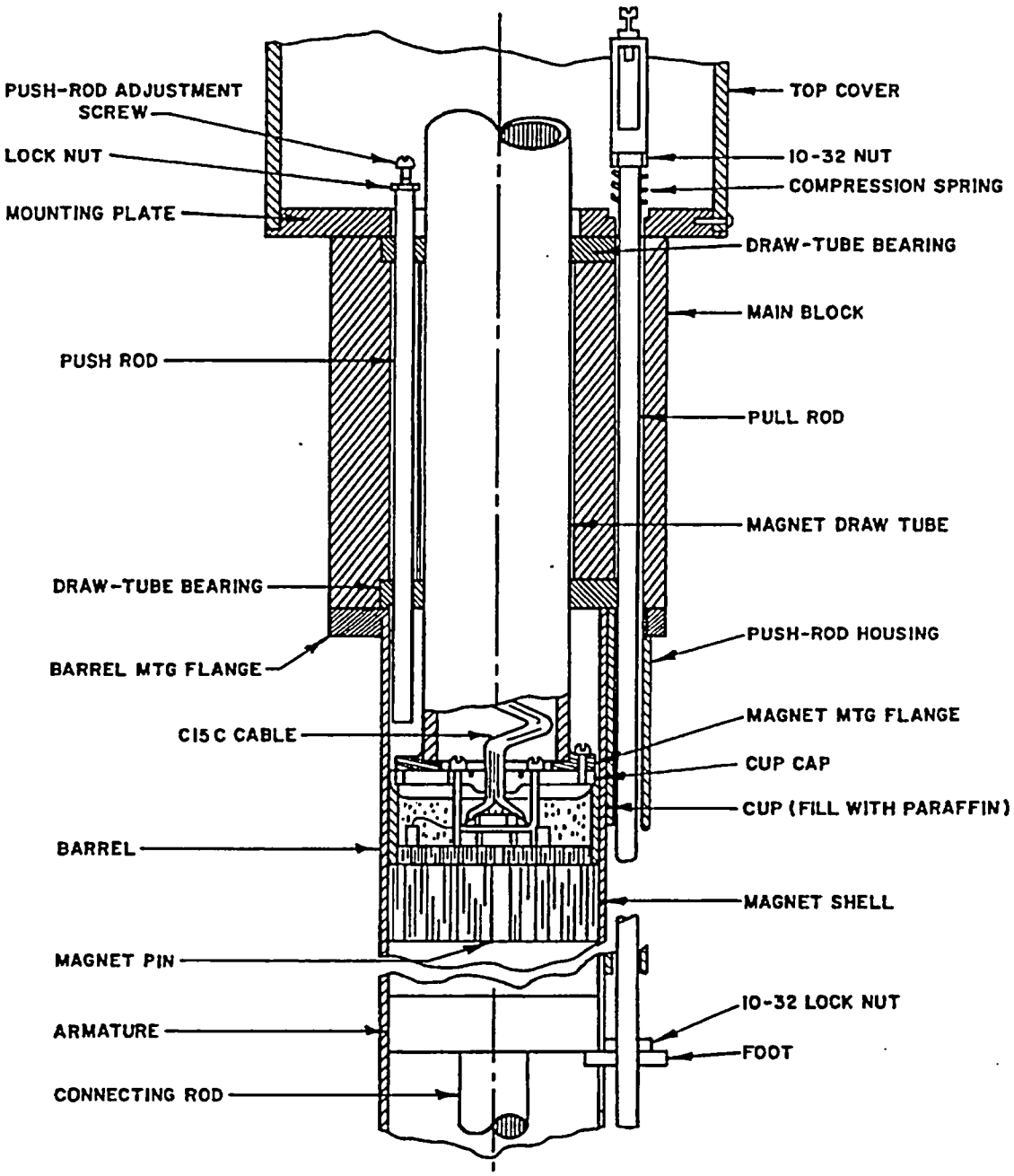

Figure 4.13: Control Rod Magnet Details

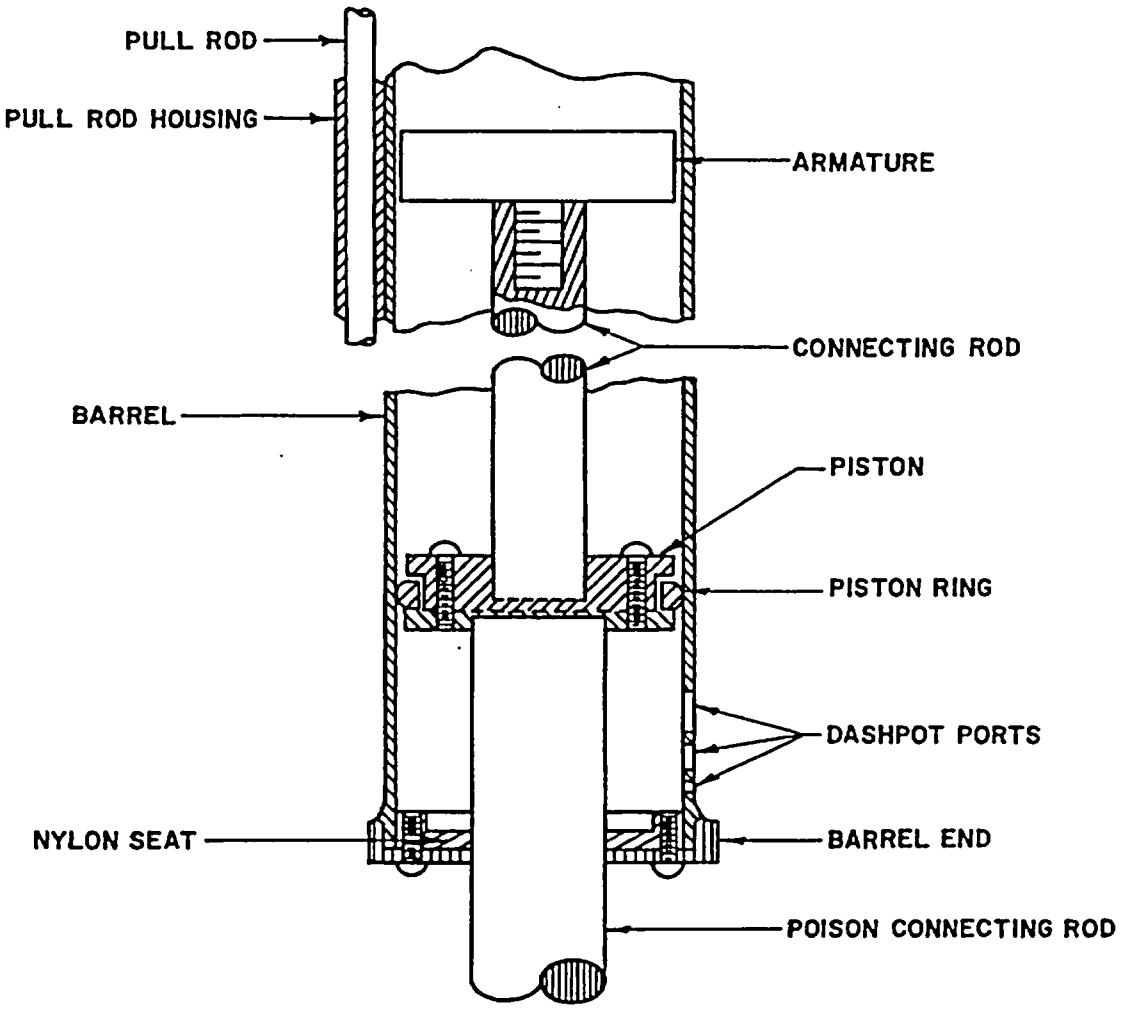

Figure 4.14: Control Rod Armature Details

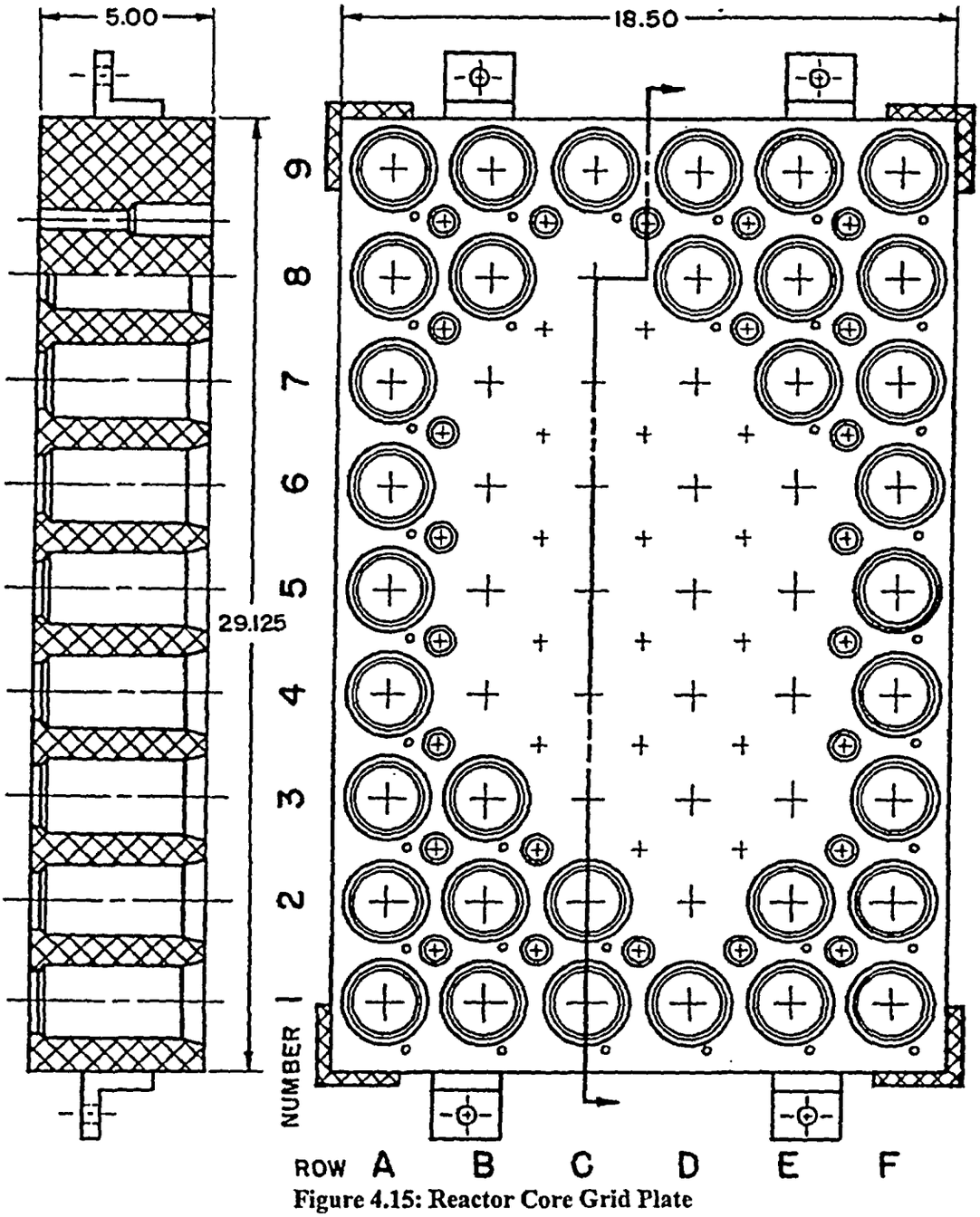

Figure 4.15: Reactor Core Grid Plate

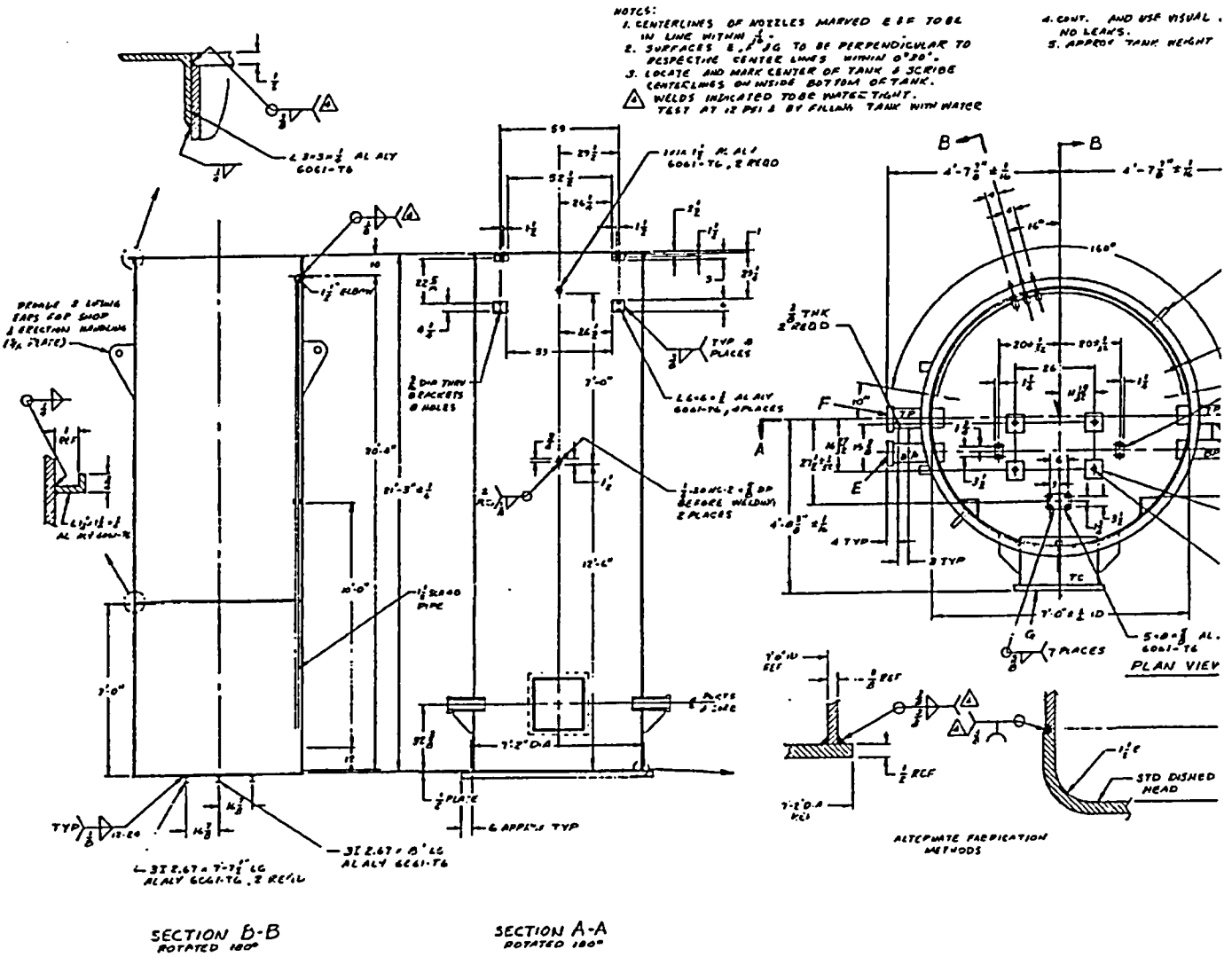

Figure 4.16: Reactor Pool Tank

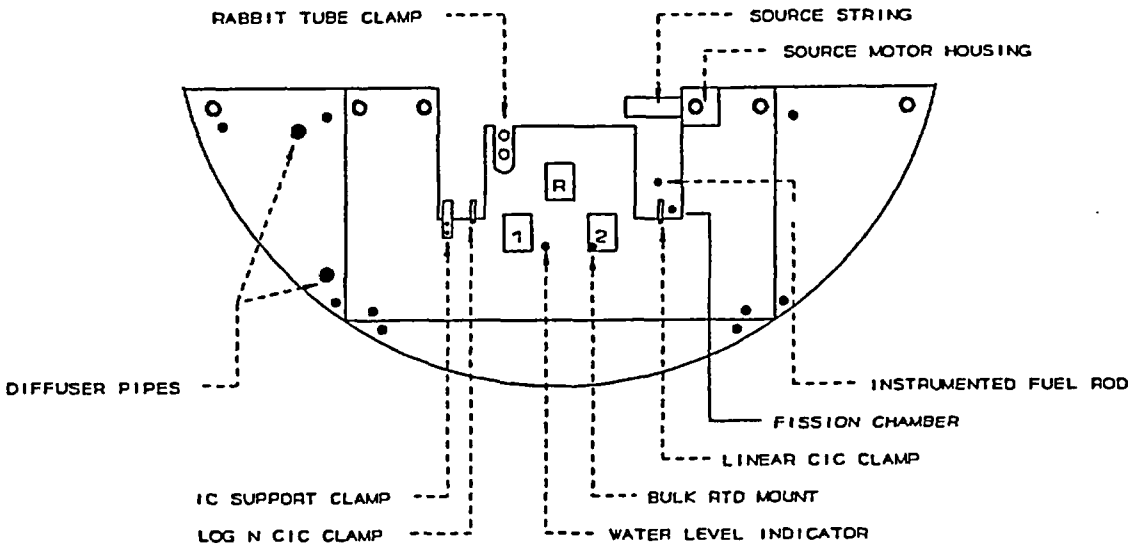

Figure 4.17: Bridge Support Structure

5.0 REACTOR COOLANT SYSTEMS

5.1 SUMMARY DESCRIPTION

The coolant water for the reactor is purified, cooled and replaced in a system that consists of two mixed-bed demineralizers, a heat exchanger, a circulation pump, and associated piping and valves. The system also includes a sock-type filter and a cartridge-type filter with pressure gauges, flow meters, conductivity cells, temperature probes and a flow regulator. The cooling capacity of the water system is 300 kW at a water temperature of 32 °C (90 °F). The water conductivity is kept at about 5 μS/cm (resistivity of 0.2 MΩ·cm) to minimize corrosion and activation products. The purification system removes radioactive ions and particles from the reactor water, reduces conductivity, and helps to maintain optical clarity of the water.

5.2 PRIMARY COOLANT SYSTEM

The reactor coolant water is circulated through a closed loop to maintain its purity and temperature. The Reactor Coolant and Purification System is located in the water handling room on the ground floor below the reactor control room.

As shown in Figure 5.1, the primary coolant pump draws reactor water from the top of the reactor pool down to the water handling room. Primary flow in the system is approximately 7.6 L/s (120 gpm). After leaving the primary coolant pump the water passes through first through a particle filter and then through a flow orifice where the differential pressure determines the flow rate. The differential pressure transmitter electronically measures the flow rate. A signal is sent to the upper console where a BTU computer is located.

The coolant then passes through a plate-type heat exchanger to remove the heat generated by the reactor core. This counterflow heat exchanger has a heat removal capacity of 300 kW. Should the need arise, the heat removal capacity can be increased by adding additional plates or by installing a booster pump on the secondary side. The heat exchanger may also be bypassed by closing the two isolation valves for the heat exchanger and opening the heat exchanger bypass valve. Two temperature probes used to monitor the pool inlet and outlet water temperatures are mounted before the inlet bypass tee and after the outlet bypass tee.

Additional instrumentation for the primary coolant system exists in the form of pressure gauges and thermocouples. Pressure gauges are located before and after the filter and before and after the heat exchanger. Primary coolant temperature is measured by two thermocouples in the reactor pool; four thermocouples in the primary system, two before and two after the heat exchanger; and two thermocouples in the secondary water system before and after the heat exchanger. Temperatures are displayed on the right hand side of the upper console. Additionally, the BTU computer uses one pair of primary coolant heat exchanger temperatures plus the differential pressure signal to calculate and display flow rate and heat removal rate.

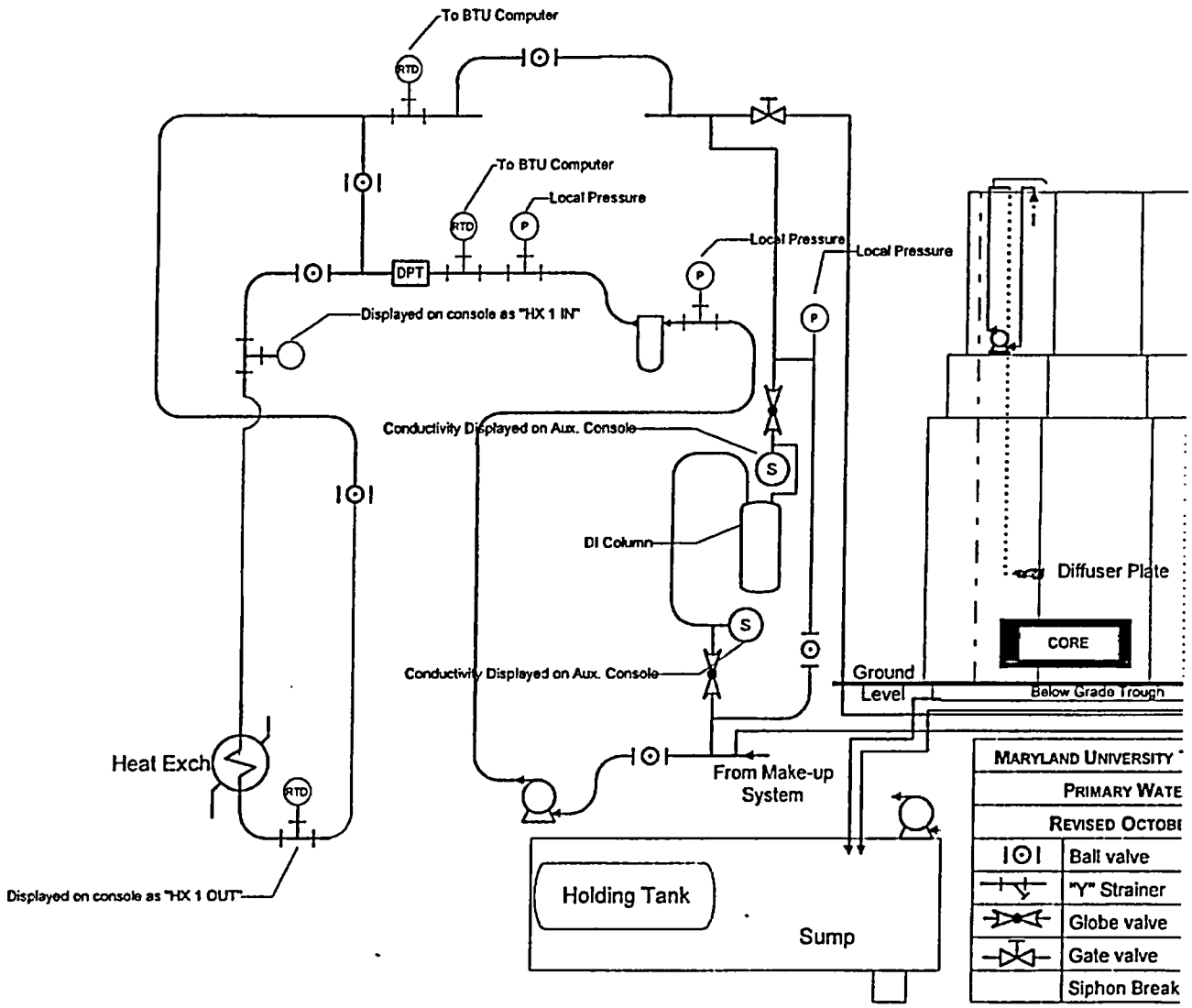

Figure 5.1: Primary Coolant System

5.3 SECONDARY COOLANT SYSTEM

The secondary system, Figure 5.2, consists of all piping, valves and pressure gauges associated with the cooling of the primary system. The secondary system is an open loop originating with the city water system, passing through the heat exchanger, and terminating in the city sewage system.

5.4 PRIMARY COOLANT CLEANUP SYSTEM

The primary coolant cleanup system consists of two components. The first component is a microfilter installed after the primary coolant pump. The second component is a partial flow demineralizer column.

5.4.1 Microfilter

The microfilter is a 100 μm sock filter mounted in a stainless steel housing. The filter is installed immediately after the primary coolant pump. Two pressure gauges in the filter inlet and outlet lines measure the pressure drop across the filter and indicate when it should be changed.

5.4.2 Demineralizer Column

A demineralizer (ion exchange) loop is tapped between the reactor pool inlet and outlet lines. After the coolant leaves the heat exchanger, a portion (10 %) of the water flows through the demineralizer. The demineralizer has a disposable cartridge and a signal light to indicate when the cartridge is to be replaced, and when the cartridge is not in use. The ion exchanger technique employed in the cartridge to demineralize the water uses mixed beds of anion and cation resins. In deionization, the cation resin is operated in the hydrogen cycle and the anion resin in the hydroxide cycle. When water containing mineral impurities is treated with two such resins in series, the hardness ions, calcium, and magnesium are removed and replaced by H^+ and OH^-. This combination of substitutions results in the replacement of salts by water and thus constitutes a demineralizing action. The above process converts hard water to soft water.

The cartridge contains the resin beads in a mixed bed. Starting at the top, the water filters down through the bed and collects at the bottom where it is piped up to the top of the cartridge. A fine mesh screen keeps the resin beads from flowing out.

Two conductivity probes are placed on the inlet and outlet legs of the demineralizer to determine the deionizing potential of the demineralizer. A conductivity meter is located on the auxiliary panel of the reactor control console. If conductivity exceeds the preset limits on the meter, an annuciator light on the upper console is activated.

When the outlet conductivity of the demineralizer indicates that the resin has been depleted, the column is isolated and removed from the Primary Coolant System. After removal the columns contents are removed into a watertight storage container, and new resin is added to the column. The column is then reinstalled into the system and its operability confirmed. Samples of the resin are examined to determine the type and quantity of radioisotopes present. After allowing the resin to dry, it is packaged and possession transferred to the campus Department of Environmental Safety for disposal.

5.5 PRIMARY MAKEUP WATER SYSTEM

The Makeup Water System, Figure 5.3, replaces water that has been lost by evaporation. A tap is taken from the Secondary Coolant System after the backflow prevention valve and before the heat exchanger. A solenoid valve, attached to a one-hour analog timer, controls the flow through this line. Before entering the Primary Coolant System the City water is reduced in pressure and passed through a check valve and the Makeup Water Cleanup System, a cartridge microfilter and a demineralizer column, before it enters the primary loop. The microfilter filters small particles and the demineralizer (the same type used in the primary loop) removes minerals from the water. The pressure reducer placed on the inlet before the filter maintains the makeup water flow rate at the working specification of the demineralizer. To add makeup water, three valves have to be opened, including the solenoid valve that is operated by setting the timer. The entire system is located on the south wall in the water handling room.

5.6 NITROGEN-16 CONTROL SYSTEM

^{16}N, a gamma emitting isotope with a 7.1 s half-life, is produced during reactor operation by the fast neutron irradiation of oxygen in the reactor pool water, $^{16}O(n,p)^{16}N$. Although the transport time for ^{16}N through the column of water above the core provides a large attenuation factor for ^{16}N decay, a water jet diffuser has been installed to provide additional decay time. The diffuser system operates by means of a pump located on the second step of the reactor pool tank concrete. This pump takes suction from the reactor pool tank and forces it out through the diffuser flange, 15 cm (6") wide, located just above the core of the reactor. The outlet pipe is equipped with a siphon break to preclude a significant loss of primary coolant in the event of a piping failure outside of the pool tank. The discharge water is angled down to impart a turbulence to the water convection current leaving the core and increase the distance that the ^{16}N must travel to reach the surface of the pool water. This action significantly reduces the radiation intensity at the top of the reactor pool.

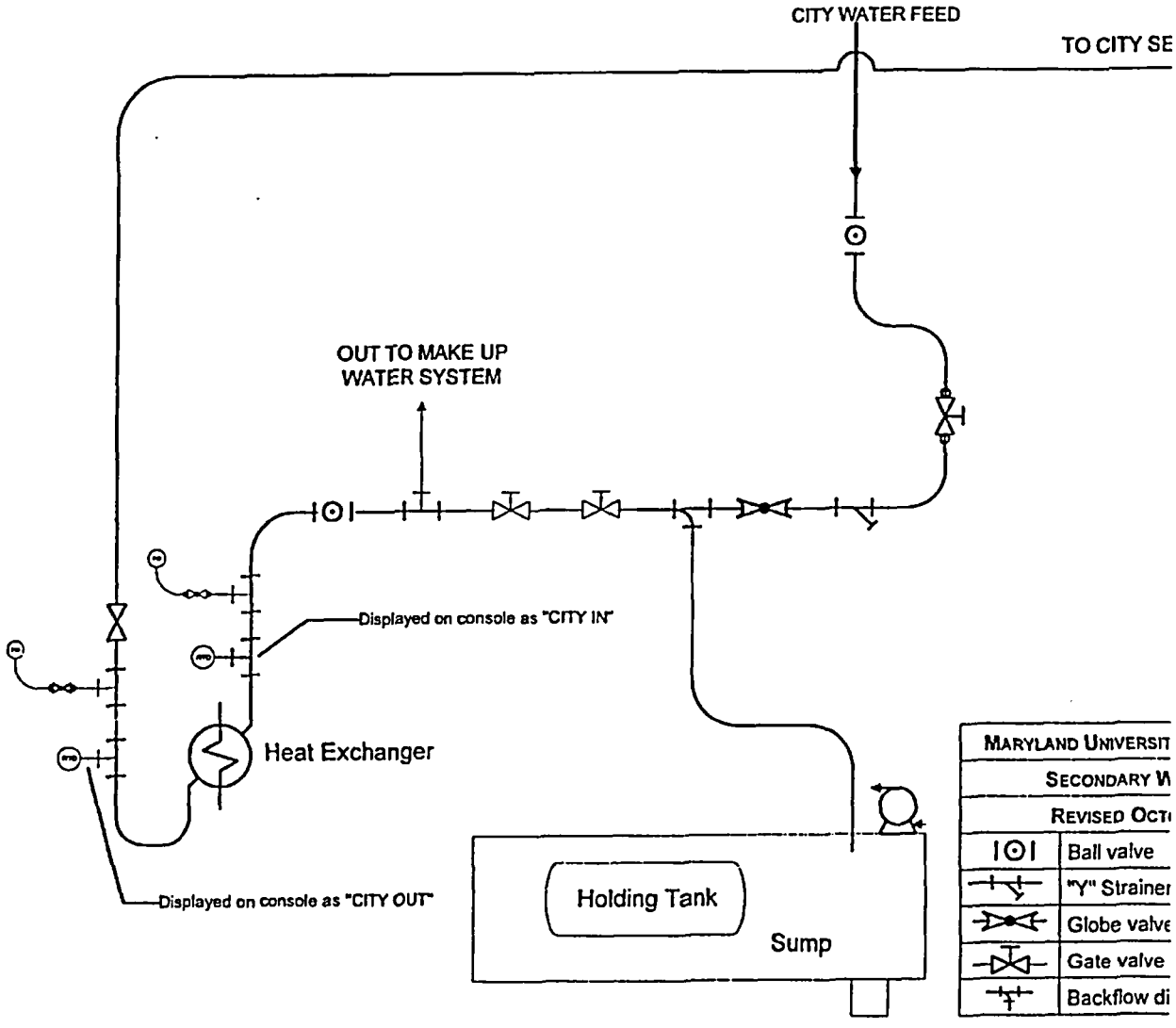

Figure 5.2: Secondary Coolant System

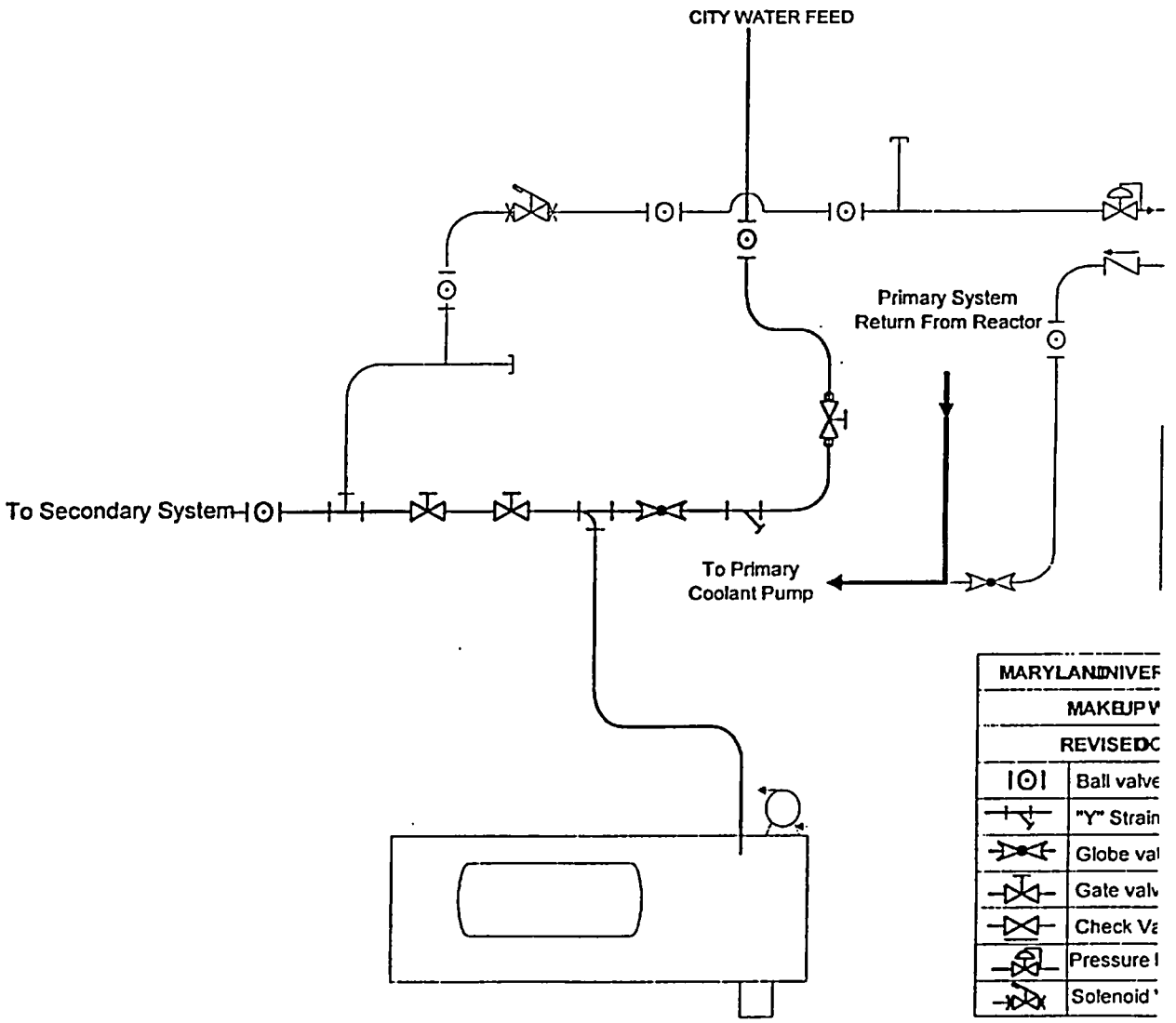

Figure 5.3: Primary Makeup Water System

5.7 REACTOR SUMP

The Reactor Sump, see Figure 5.4, is an epoxy coated, concrete pit located in the water room. The sump measures 1.22 m x 1.22 m x 3.35 m (4 ft x 4 ft x 11 ft). It has a total volume of 4980 liters (1300 gal). The pit is covered with reinforced concrete blocks that are removable to allow access to the sump. Of that volume 380 liters (100 gal) is occupied by a hold up tank. The Reactor Sump serves to hold all liquid effluents originating from potentially contaminated areas so that they may be monitored before release into the sanitary sewer.

There are five locations that drain into the Reactor Sump. The backflow prevention valve where city water enters the reactor building drains into the Reactor Sump. The sink in the hot room drains into the sump. The reactor pool tank overflow pipe drains into the Reactor Sump. The sink in the lower level of the reactor bay drains into the reactor sump. Lastly, the grate around the reactor concrete shield drains into the Reactor Sump. The balcony sink and the bathroom sink do not drain into the sump.

The holdup tank is a painted steel, ASME, water tank rated to 689 kPa (100 psi). The tank sits on a tank stand constructed out of aluminum pipe. The tank has a vent hole on its top surface and an overflow pipe to give a visual indication of a full tank.

The sump is plumbed with its own water handling system. This system allows the sump to operate in the following modes. Sump water can be recirculated through the sump back into the sump through a set of showerheads mounted along the centerline of the sump. Water from the sump can be pumped into the hold up tank. Water from the sump can be pumped into a set of cartridge type, particulate filters, which can then be discharged back into the sump or into the sanitary sewer. Water from the sump can also be pumped to a sample port. Water from the holdup tank can be pumped into the sump, to the sample port, or into the filters. Lastly city water can be added to the sump, added to the tank for dilution, discharged to the sample port or into the filters. The default mode of operation is to recirculate water within the sump. The normal condition of the filters is for the inlet valve to be closed and locked to prevent accidental discharge of the sump into the sanitary sewer. The city water inlet is equipped with a spring check valve.

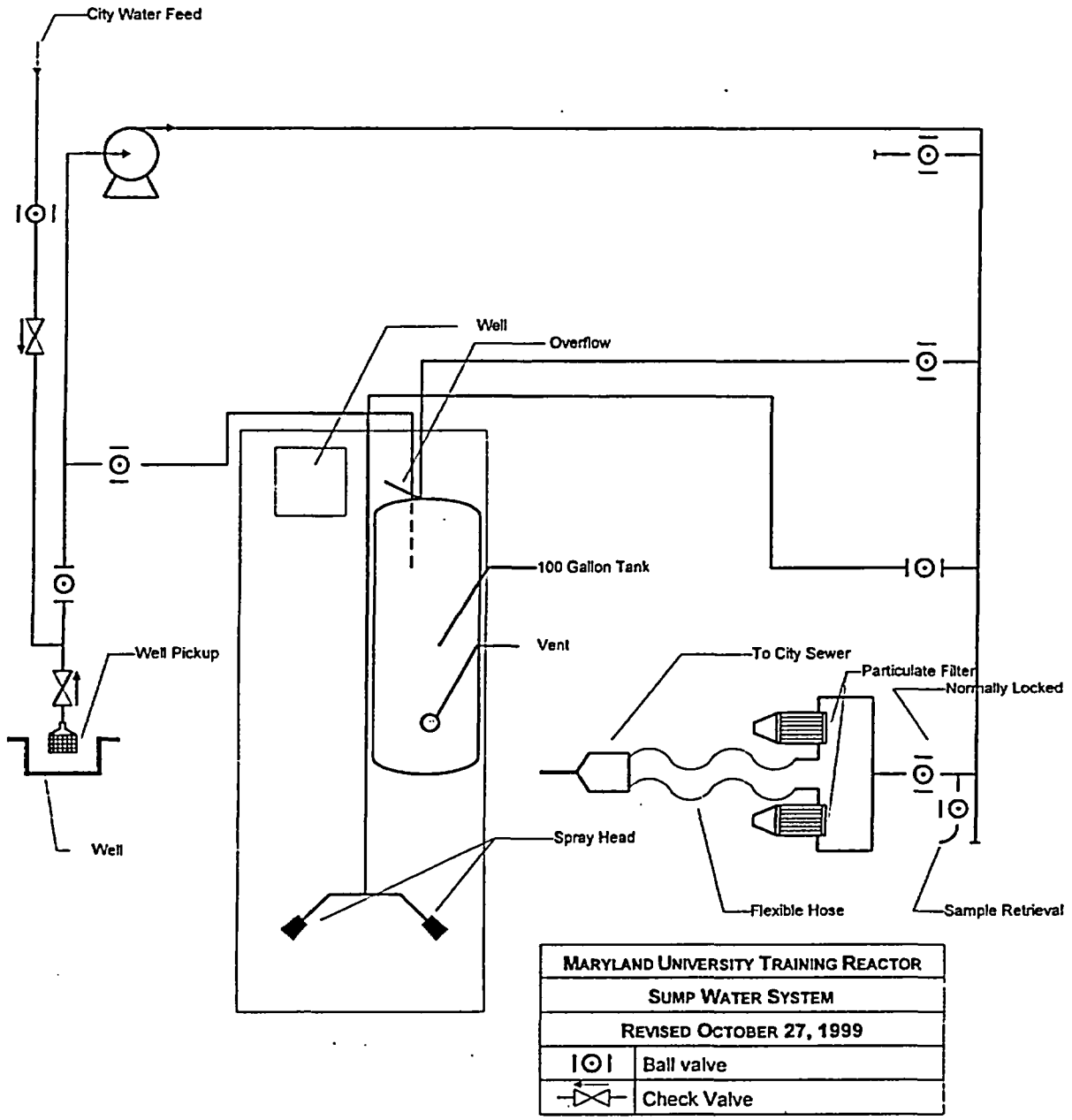

Figure 5.4: Reactor Sump

6.0 ENGINEERED SAFETY FEATURES

The purpose of the confinement during an accident is twofold. One purpose is to provide a large air volume into which releases of radioactive gasses or other volatiles can be diluted in order to reduce doses to personnel located inside the reactor facility during evacuation of the facility. Its second, and primary, purpose is to provide a barrier to retard the release of radioactive materials to public areas of the campus. To achieve this second objective, the building ventilation system is tied into the radiation monitoring system of the facility described in section 7.7. In the event that high radiation levels are detected by this system, electric power to ventilation fans is terminated and the louvers are closed. The louvers are also designed to close in the event of a loss of offsite power.

7.0 INSTRUMENTATION AND CONTROL SYSTEMS

7.1 SUMMARY DESCRIPTION

The instrumentation and control (I&C) systems for the MUTR consist of three major sets of I&C displays, four ex-core neutron detectors and associated power supplies and signal amplifiers, the three control rod drive motors, and the radiation area monitors. All control systems for the reactor are hardwired analog systems. The majority of the core monitoring instrumentation, with the exception of the fuel temperature meter, is analog displays. The majority of the auxiliary instrumentation displays are digital displays. Figure 7.1 shows a schematic overview of these systems.

The remainder of this section will describe the major I&C categories used in the MUTR I&C systems.

7.1.1 Reactor Control Systems

Three control rod drive units control the MUTR. Two of the three rods are controlled manually by the reactor operator. The third rod can be controlled manually or by an automatic control system. There are five interlock systems that inhibit control rod movement: the count rate interlock, the Safety 1 trip test interlock, the single rod withdrawal interlock, and the beam port and through tube interlock, and the automatic controller interlock.

7.1.2 Reactor Protection Systems

The RPS consists of the ex-code neutron detectors, the instrumented fuel element discussed in Section 4.2.1, the radiation area monitors, and the reactor scram circuitry. The RPS monitors radiation levels in the reactor building, reactor power level (via two independent systems), fuel temperature, reactor period, neutron detector power, and console status. Each one of the aforementioned functions can scram the reactor as well as the operator or loss of offsite power.

7.1.3 Engineered Safety Feature Actuation Systems

The systems required to actuate the engineering safety feature for the MUTR are the radiation area monitors described in Section 7.7 and the reactor ventilation system described in Section 6.0.

7.1.4 Control Console and Instrumentation Displays

The control console and instrumentation displays consist of the original TRIGA console installed by General Atomics in 1972, the upper control console that was installed by facility staff in 1993, and an auxiliary console. The TRIGA console and upper console are designed to allow the operator to see all of the critical reactor instrumentation and status of the water handling room while positioned in front of the control rod drive buttons. The auxiliary console contains primarily equipment items that are needed for experimenters or that are not necessary to monitor during operation.

7.1.5 Radiation Monitoring Systems

The radiation monitoring systems for the MUTR consist of gamma detectors capable of measuring count rates of 10 R/hr with displays both in the upper console and at remote locations in the facility. Two of the monitors are located in the Reactor Building, one on the bridge and one near the west balcony exhaust fan. These monitors are part of the ESF system. The third monitor is in the hot room glovebox and allows the monitoring of samples returned from the core without the presence of a person.

7.2 DESIGN OF INSTRUMENTATION AND CONTROL SYSTEMS

7.2.1 System Performance Analysis

7.2.1.1 *Reliability Analysis for Bistable Trip*

This subsection examines the reliability of the Gulf General Atomic nuclear bistable trip module NT-4 used in the MUTR. Failures are considered to be opens, shorts, or radical departures of individual components or the module from initial characteristics.

In the analysis the following assumptions are made:

1. All circuit failures result from random component failures.
2. During the operating life, each component will have a constant failure rate.
3. Part failures are independent of each other.

These assumptions lead to an exponential model for the probability of survival:

$$R_s = e^{\sum_{i=1}^{N} \lambda_i t}$$

Where R_s = probability of survival of the system

λ_i = probability of failure per unit time of the Ith component

N = total number of components in the system

Gulf General Atomic has performed a failure mode and component reliability analysis using λ_i's from the MIL Handbook 217. They state that the total failure rate for the module per unit time is

$$\sum_{i=1}^{N} \lambda_i = 5.76x10^{-6} / \text{hr}$$

Thus over a ten year period

$$P_s = e^{-(5.76x10^{-6} / \text{hr})(8.76x10^4 \text{hr})} = 0.604$$

That is, the probability of the entire module performing free of failure for a ten year period is 0.604. The failure rate for the module as given by this model is

$$R_f = \sum_{i=1}^{N} \lambda_i e^{-\sum_{i=1}^{N} \lambda_i t}$$

and the mean time between failure (MTBF) for the module is

$$\text{MTBF} = \int_0^\infty t R_f(t)\partial t = \frac{1}{\sum_{i=1}^{N} \lambda_i} = 1.73x10^5 \text{hr}$$

The Gulf General Atomic component analysis has shown that some components could fail, preventing a trip action. Thus the probability of having an event which is not fail-safe is calculated. Component failure modes causing a trip level increase have been taken into account as unsafe failures. The module failure rate for faults causing a trip to be prevented is given by Gulf General Atomic as

$$\sum_{i=1}^{J} \lambda_i = 2.3x10^{-6} / \text{hr}$$

where J is the total number of such unsafe failures. Thus the probability of survival of a single module with respect to unsafe failure over ten years is given as

$$P_s^* = e^{-(2.3x10^{-6} / \text{hr})(8.76x10^4 \text{ hr})} = 0.815$$

That is, the probability of the module performing free of such failure is 81.5 %. The MTBF for these events is 445,000 hours.

The MUTR console is provided with two linear safety channels with independent NT-4 bistable trips. The system reliability for the use of independent parallel paths is given by

$$R = 1 - \left[1 - e^{-\sum_{i=1}^{N} \lambda_i t} \right]^n$$

where n is the number of redundant units.

Thus the probability of failure of the system performing free from non-fail-safe failures over ten years is

$$R^* = 1 - (1.75)^2 = 0.97$$

In the above calculations the effect of the independent bistable trip NT-4 on the period channel and operation interaction has been ignored. Thus the above figures are conservative, and the system reliability is probably much better than 97 % with regard to fail-safe operation.

7.2.1.2 *Failure Mode Analysis for MUTR Console Scram and Rod Control Circuits*

This analysis examines the types of failures required to render all safety system scrams inoperative, and the possible malfunctions that could occur to cause the control rods to be simultaneously withdrawn. Although the reactor operator ordinarily plays an important role in the safety of reactor operation, for the purposes of this analysis the assumption is made that the operator would allow the anomaly to run to its final conclusion.

The control rod drive mechanism is an electric motor actuated, linear drive equipped with a magnetic coupler. A 110 V, 60 Hz, two-phase motor drives a pinion gear. The magnet engages an iron armature which is screwed into the end of a connecting rod that terminates at the control rod. Figure 7.3 is a simplified diagram of the motor control circuit shown with the rod down. During normal operation point M and N receive line power through the normally closed control rod UP and DOWN pushbuttons.

Depressing the UP button opens the circuit from point M on. This permits line current to flow through the DOWN pushbutton through the 1 μF phase shift capacitor to point M. This phase difference at the motor winding will cause the motor to rotate in a clockwise direction. (Counterclockwise motion is obtained by pushing the DOWN pushbutton.) As the rod starts up the "Rod Down" limit switch is released just prior to the "Magnet Down" limit switch. Thus, the current to the rod drive motor through the phase shifting network is uninterrupted.

If for any reason the armature disconnects from the magnet (such as in the event of a scram), the connecting rod system will drop and reinsert the control rod into the reactor. When the connecting rod system reaches its lowermost rest position, the "Rod Down" limit switch, S903, will reverse. S903A will open the circuit in series with the DOWN pushbutton. Unless the UP pushbutton is depressed, the motor will run automatically and thus drive the magnet down. When the magnet has been lowered to its lowermost position, the "Magnet Down" limit switch will again reverse, assuming the position indicated on the schematic.

Note that any switch action that stops the motor rotation does so by short-circuiting the phase shifter. It is probable that, at the time the short circuit is applied, the 1 μF capacitor will be fully charged or partially charged. Discharging the capacitor directly through the switches would give rise to heave surge currents that could damage the switches. The 220 Ω resistor in series with the phase-shifting capacitor limits this discharge current to a value that is safe for the switches to handle.

The unconventional circuit employed in the rod-drive system minimized the number of switch contacts required. Therefore, relays, with their attendant reliability problems, are not required. It should be noted that all rod-drive units are identical both mechanically and electrically: they are, therefore, interchangeable.

The scram circuit, Figure 7.1, consists of the magnet power supply; scram relays K1, K7 through K12, and K23; the reactor operate permit; manual scram switches S4 through S7; and the scram reset relays K19, K20, and K24.

Primary power is applied to the magnet power supply via the magnet power key switch and reactor operate permit. The output of the magnet power supply is applied to the coil of the magnet power scram relay, K1, through a series scram buss. The scram buss consists of relays K7, linear scram; K8, percent power scram; K9, period scram; K10, high voltage scram; K11, manual scram; K12, external scram; and K23, fuel temperature scram. A holding voltage on their normally open contacts energizes relays K7 through K23. The individual scram circuits, i.e., linear, percent power, period, etc. provide this voltage.

The scram relay, K1, provides magnet power to the individual magnet power ON indicator lamps DS7, DS9, and DS11. These indicators are in series with the individual rod drive magnets and indicate that magnet power is actually applied to the magnets.

A study of the system discloses no common tie point between the individual rod drive UP control circuit, other than the AC power buss which is also common to the DOWN control circuits. Therefore, in

considering failures that could cause all rod drives to be simultaneously withdrawn, it must be concluded that simultaneous failures must occur in each individual rod drive circuit. In the case of a three control rod drive reactor, this would then be a minimum of three simultaneous failures. The arrangement of the components, wiring, and plug connections is such that inadvertently shorting two points simultaneously to disable the rod control circuit is not possible.

All relays in the scram circuit are operated in a fail-safe configuration, i.e., they all must be energized in order to provide magnet current to the rod drive magnet couplers. Table 7.1 shows that the contact ratings of the relays and switches are far above the actual circuit requirements.

Table 7.1: Rod Control and Scram Component Operating Characteristics

	Maximum Electrical Rating	Number of Operations*	In-circuit Power Consumption	Number of Mechanical Operations in Circuit
Rod Control Pushbutton Switch	10 A	$5x10^4$	75 mA	Not determined
Fixed Resistor (220 Ω)	2 W	N/A	1.5 W	N/A
Variable Resistor (100 Ω)	2 W	N/A	0.75 W	N/A
Connector	5 A	N/A	75 mA	N/A
Relay (KRP 14 AG) K7-K24	10 A	$1x10^7$	1.02 A	1 per scram
Relay (KCP 14) K1	10 A	$1x10^7$	1 A	1 per scram
Relay (HGSM 1001)	100 VA	$1x10^9$	2 VA	1 per scram
Reset Switch	9 A	$2.5x10^4$	0.007 A	1 per scram

*Manufactures specification of minimum number of mechanical operations.

As explained previously, the scram logic consists of a series of scram busses operating the parallel combination of scram relay K1 and the individual rod drive magnets, with the normally open contacts of relay K1 in series with the rod drive magnets. Therefore, no single failure in the scram circuit can disable both the automatic and manual scram.

Even if six simultaneous failures should occur, the manual scram would still be effective. The magnet current to the individual rod drives is controlled by the normally closed contacts of the MAGNET CURRENT ON pushbutton switch and annuciator located under the manual scram bar. Therefore, even though depressing the manual scram bar would not have an effect on the scram buss, the magnet current would be interrupted to the rod drive magnets.

In order to prevent the operation of the scram circuit, six independent failures must occur. Four independent failures would disable the automatic power level, fuel temperature, and period scrams. In addition, investigation of the component layout has shown that it is extremely unlikely that any single occurrence of inadvertently dropping a metal object, e.g., solder, screwdriver, etc., could cause a failure of the scram circuit.

7.2.2 Conclusion

Because of the above analysis, the staff concludes that the reactor control system is sufficiently reliable for its intended purpose. The staff also concludes that there is no plausible scenario via which a set of system failures could lead to an inability to shut down the reactor.

7.3 REACTOR CONTROL SYSTEM

The RCS consists of the pushbutton switches, see Figure 7.1, along with its associated circuitry used in manual operation and the Power Regulation System used in automatic control.

In manual operation, the control rods are raised or lowered exclusively by depressing UP or DOWN buttons. A servo may be used to maintain the power automatically at the desired level by movement of the regulating rod. Alternatively, after the reactor is critical, a servo demand power may be selected and the regulating rod will adjust power to the demand level. A logic diagram of the entire RCS is shown in Figure 7.1.

7.3.1 Manual Operation

7.3.1.1 *General Operation*

The shims and regulating control rods are manually controlled through operation of the pushbuttons in the center of the control panel. They are arranged in vertical rows with one row for each rod. Each row consists of three buttons: the top button displays a yellow light for magnet current on (ON) and a blue light for rod contact (CONT), the middle button displays a red light for the magnet up limit (UP), and the bottom button displays a white light for the magnet down limit (DOWN). Pressing the top button will break the circuit supplying magnet power for that rod causing the rod to drop into the core. Pressing the UP button will raise the control rod. Pressing the DOWN button will lower the control rod.

Table 7.2 shows the logic that lights the various lights. The yellow ON light is lit whenever there is current being applied to the control rod magnet. The blue CONT light is lit if either both the rod down and magnet down switches are depressed or if neither of the switches are depressed. The red UP light is lit if the magnet up limit switch is depressed. The white DOWN light is lit if the magnet down switch is depressed.

Table 7.2: Control Rod Pushbutton Indicator Light Logic

Microswitch	ON	CONT		UP	DOWN
Magnet Up	Key Switch			X	
Magnet Down		X	0		
Rod Down		X	0		X

7.3.1.2 *Circuit Operation*

The circuit associated with the three microswitches provides limit contacts for the motor and the control rod annunciator system, which consists of three indicator lamps for each rod drive.

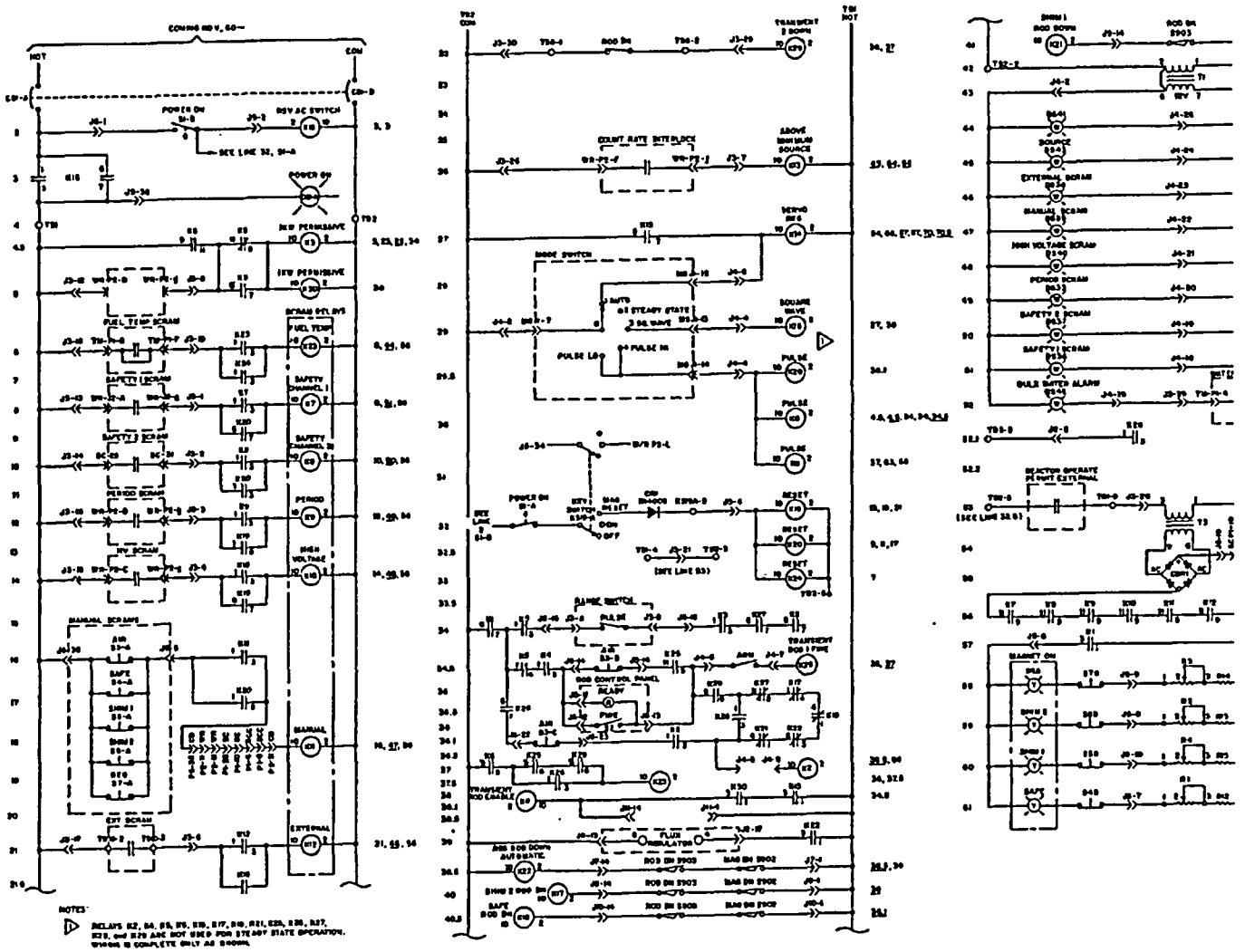

Figure 7.1: RCS and RPS Logic Diagram

Figures 7.2 through 7.4 are diagrams representing the motor control and annunciator circuits. Figure 7.2 shows the complete motor control and annunciator circuit. Figure 7.3 shows a simplified circuit for one rod only. Figure 7.4 shows a simplified motor diagram.

During normal operation points M and N, see Figure 7.4, receive line power through the normally closed rod UP and DOWN pushbuttons, which provides dynamic braking. Depressing the UP button opens the line from point M on. This permits line current to flow through the DOWN button to point N and through the 1 μF phase-shifting capacitor to point N. The phase difference at the motor windings causes the motor to rotate in a clockwise direction. Counterclockwise motion is obtained when the DOWN button is pressed.

All switches are shown in the positions they assume when the rod and magnet are fully down. Under the condition shown in Figure 7.3, the magnet DOWN lamp, DS21, and the CONT lamp, DS10, are both on, whereas the magnet UP lamp, DS16, is extinguished. Depressing the DOWN motor-control pushbutton will have no effect, since this switch is bypassed by the magnet down limit switch, S902. Depressing the UP motor-control pushbutton will open the short circuit from the B side of the power line to point M on the motor. Line current will flow directly through the bias resistor and the motor field coil B and will also flow through the 220 Ω resistor and 1 μF phase-shifting capacitor and through the motor coil M. The difference in phase between the two motor field currents will cause the motor to rotate, thus driving the magnet draw tube up. If the magnet is energized, the connecting rod system will rise with the magnet draw tube and the control rod will be raised from the reactor core.

As the magnet and armature leave their respective lower-limit positions, the rod DOWN switch, S903, will reverse and be immediately followed by the magnet DOWN switch, S902. Reversal of S902 will remove the bypass around the DOWN motor-control pushbutton and will establish a short circuit across the magnet DOWN lamp, DS21, thus extinguishing it. The 50 Ω resistor in series with the lamp and the switch limits the short circuit current to a safe value.

If the UP button is depressed for sufficient length of time, the magnet will reach its uppermost limit of travel. At this point the magnet UP switch, S901, will reverse its position, removing the short circuit from the magnet UP lamp, DS16, and bypassing the UP motor-control pushbutton. As a result, the magnet UP lamp, DS16, will light and the UP button will become ineffective.

Release of the UP motor-control pushbutton will short circuit the motor phase-shifting circuit (220 Ω resistor and 1 μF capacitor). Very nearly the same current will flow through both windings, providing dynamic breaking which will halt the motor rotation abruptly. While the motor is at rest, a torque is applied to its shaft by virtue of the weight of the connecting rod system acting through the rack and pinion. Unless compensated for, this torque will cause the motor shaft to rotate slowly and a downward drift of the rod will develop. Compensation is provided by a slight difference in the phase of the two motor field currents, which is provided by the 300 Ω adjustable bias resistor.

Depressing the DOWN motor-control pushbutton will open the short circuit from the B side of the power line to the bias resistor. Line voltage then remains directly across motor winding M, but the current through winding M must pass through the 1 μF phase-shifting capacitor. The motor thus reverses direction and drives the magnet draw tube down. Release of the DOWN pushbutton will again short circuit the phase-shifter and stop the motor abruptly.

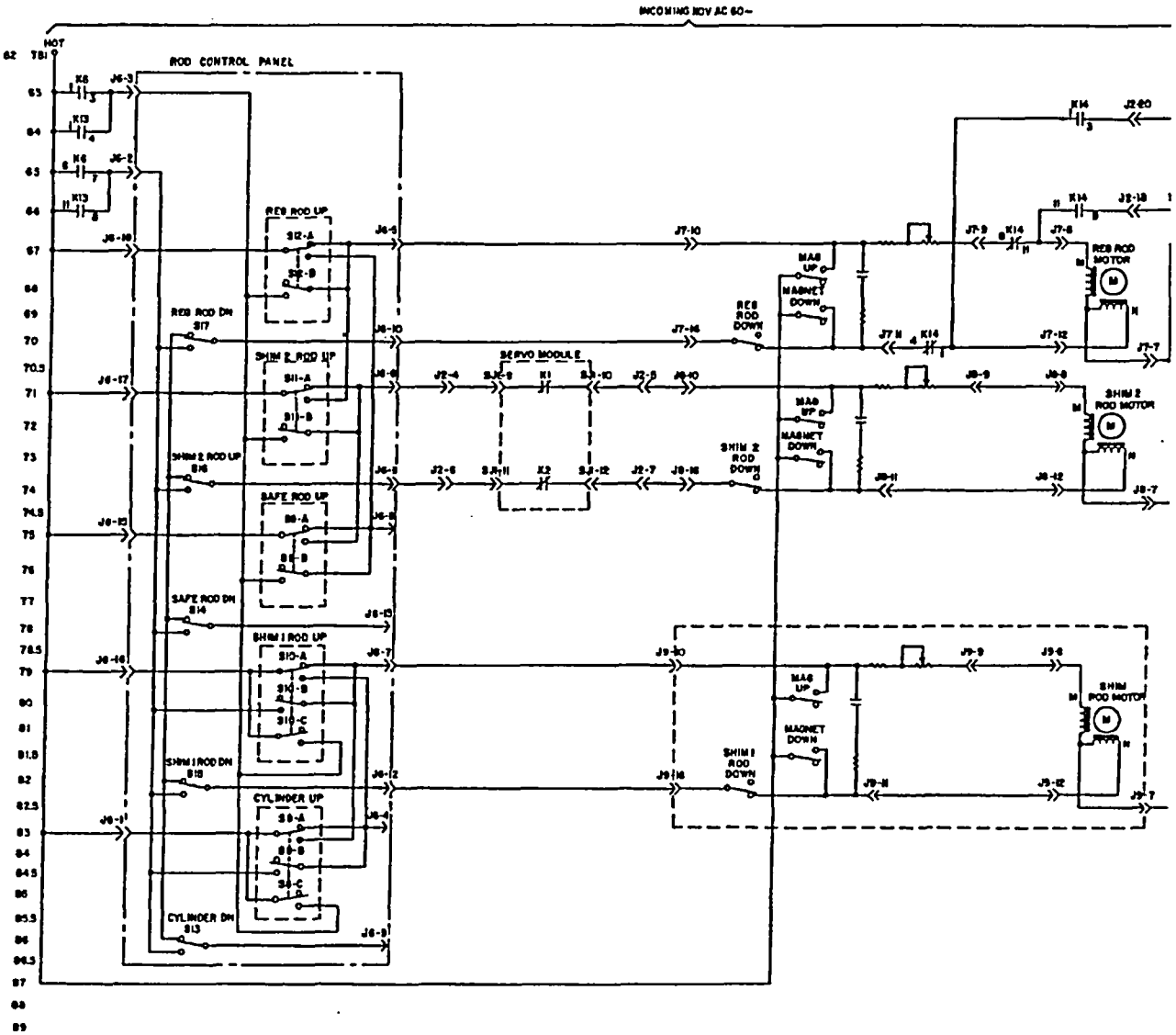

Figure 7.2: Motor Control and Rod Drive Annunciator Circuit

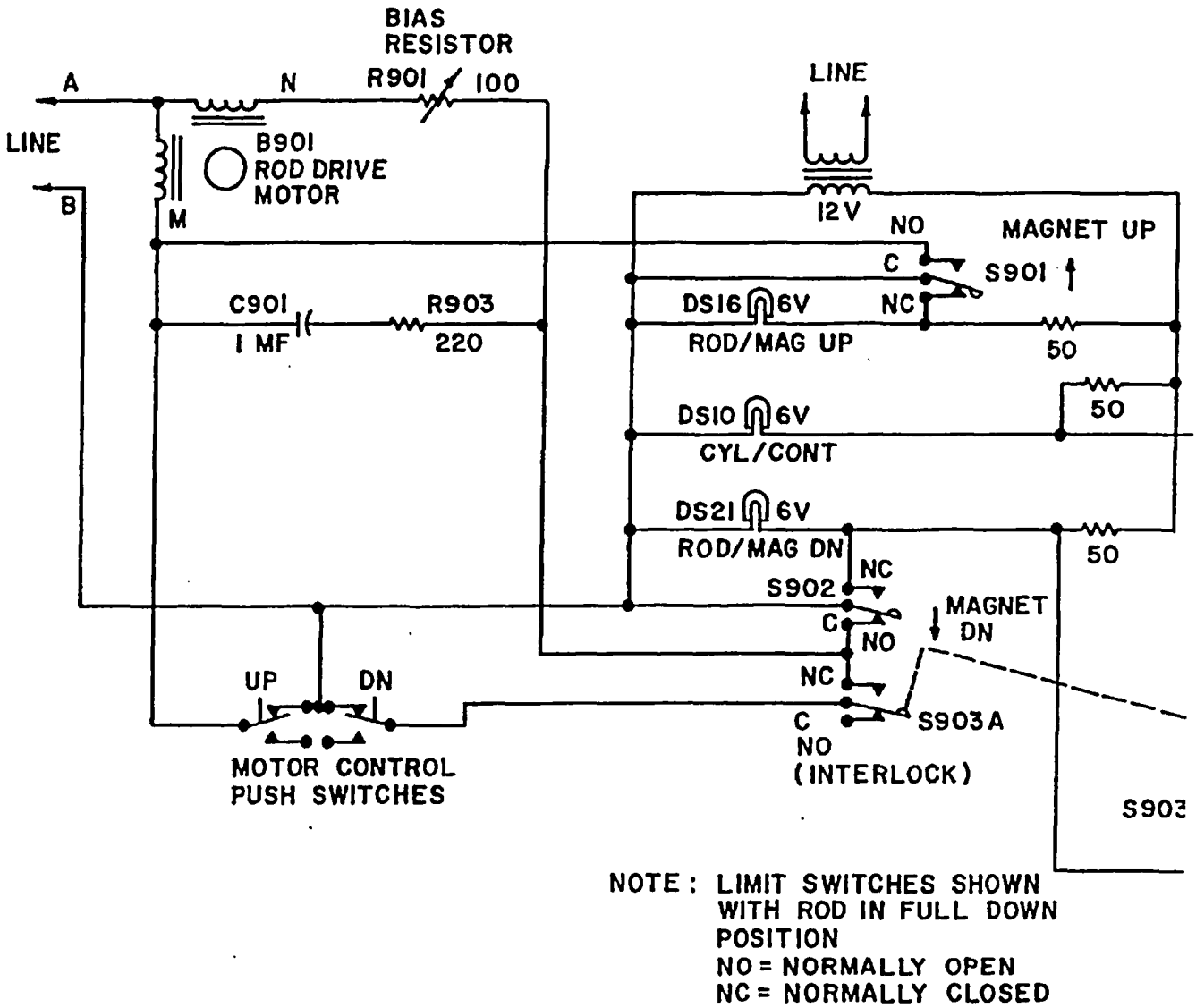

Figure 7.3: Simplified Motor Control and Rod Drive Circuit

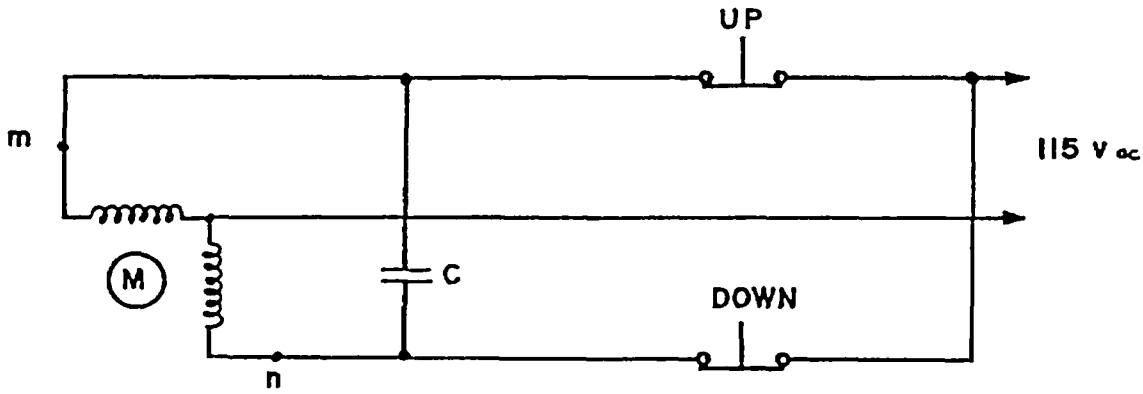

Figure 7.4: Simplified Motor Control Circuit

If for any reason the armature disconnects from the magnet (such as in the event of a scram or by pushing the ON/CONT button), the connecting rod system will drop and reinsert the control rod into the reactor. When the connecting rod system reaches its lowermost resting position, the rod DOWN switch, S903, will reverse. S903B will establish a short circuit around the CONT lamp, DS10, through the magnet DOWN switch, S902, thus extinguishing the lamp. S903A will open the circuit in series with the DOWN motor-control pushbutton. Unless the UP pushbutton is depressed, the motor will automatically run and thus drive the magnet down. When the magnet has been lowered to its lowermost position, the magnet DOWN switch, S902, will again reverse, assuming the position indicated in Figure 7.3. This will remove the short circuit from around the CONT lamp, DS10, will disable the drive down circuit, and will prevent further lowering of the magnet.

Note that any switch action that stops motor rotation does so by short-circuiting the phase shifter. It is probable that, at the time the short circuit is applied, the 1 μF phase-shifting capacitor will be fully charged or partially charged. Discharging the capacitor directly through the switches would give rise to heavy surge currents that could damage the switches. The 220 Ω resistor in series with the 1 μF phase-shifting capacitor limits the discharge current to a value which is safe for the switches to handle.

The unconventional circuit employed in the rod-drive system minimizes the number of switch contacts required. Therefore, relays, with the attendant reliability problems, are not required. It should be noted that all rod-drive units are identical both mechanically and electrically and, therefore, are interchangeable.

7.3.2 Automatic Operation

7.3.2.1 *Summary Description*

The input circuit of the power regulation system, Figures 7.5 (simplified) and 7.6 (detailed), compares the magnitude of the power level with the power demand. The magnitude of the power is represented by a 0 to 10 V signal from the linear power channel. This signal is proportional to reactor power as selected on the range selector switch. The power demand signal is derived from a linear potentiometer located on the right side of the center front panel. This demand control is calibrated in percent of range. The range is selected by the reactor power range switch.

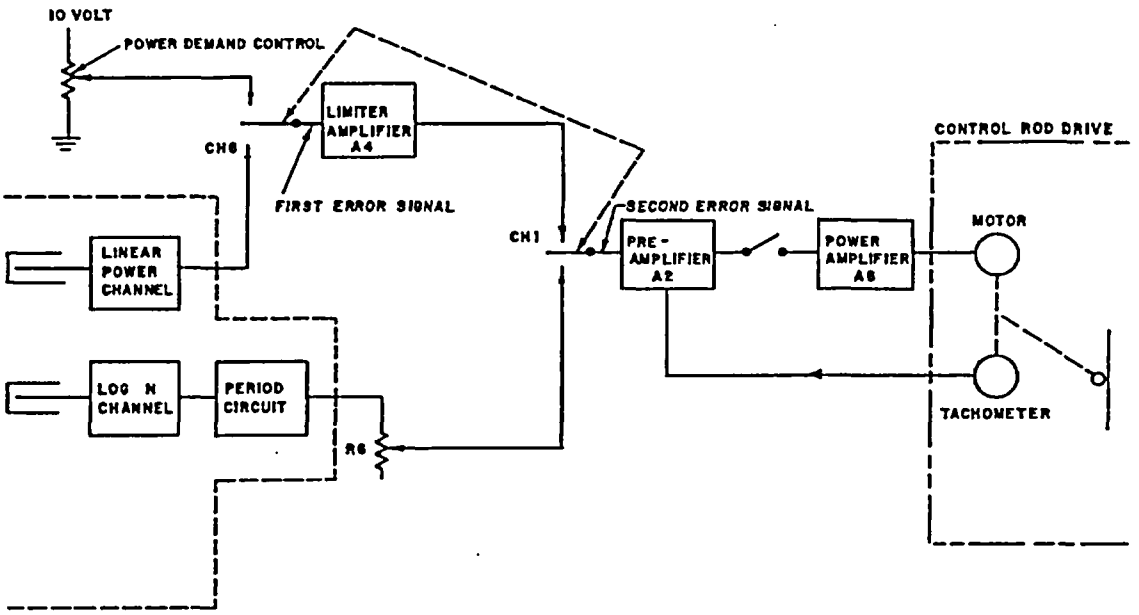

Figure 7.5: Power Regulation System (Automatic Mode)

One pole of an electromechanical chopper, CH1, is used to compare the actual power level signal and the power demand signal. The signal at the chopper arm is a 60-cps square wave error signal. The amplitude of this signal is proportional to the difference between the existing power level and the demanded power level.

The 60-cps error signal is fed to the limiter, A4. The limiter consists of an amplifier with a gain of 100 with limiting diodes in the feedback path to limit the output signal to a 4.7 V peak. It is necessary to limit the magnitude of the error signal on large power changes if the power change is to be made on a constant period.

The other pole of the electromechanical chopper is used to compare the limited-power error signal with the inverse period signal. The inverse period signal originates in the period unit and is applied to a gain control, R6, on the limiter board. The setting of this control determines the period at which the reactor will change power. Increasing the magnitude of the inverse period signal fed to the chopper will decrease the rate of change of power. A large change in power demand will cause the limiter output to rise to the limit value. This provides essentially a constant demand input to a second comparator. The net result will be that the regulating rod will be moved to bring the reactor onto a constant period. The magnitude of this period will be determined by the setting of R6. There is, however, a limit to how short a period can be obtained and still permit stable operation of the power control loop.

The period will become longer and approach infinity as the power level reaches the demand level. This happens because the power level error signal, the output of the limiter, drops below the limiting value and, therefore, requires less inverse period signal to nullify the error output to the preamplifier.

This second error signal is amplified in the preamplifier, A2, and compared with the tachometer feedback from the regulating rod. It is then fed to the power amplifier, A6, where the power is raised to the level required to operate the regulating rod servo motor.

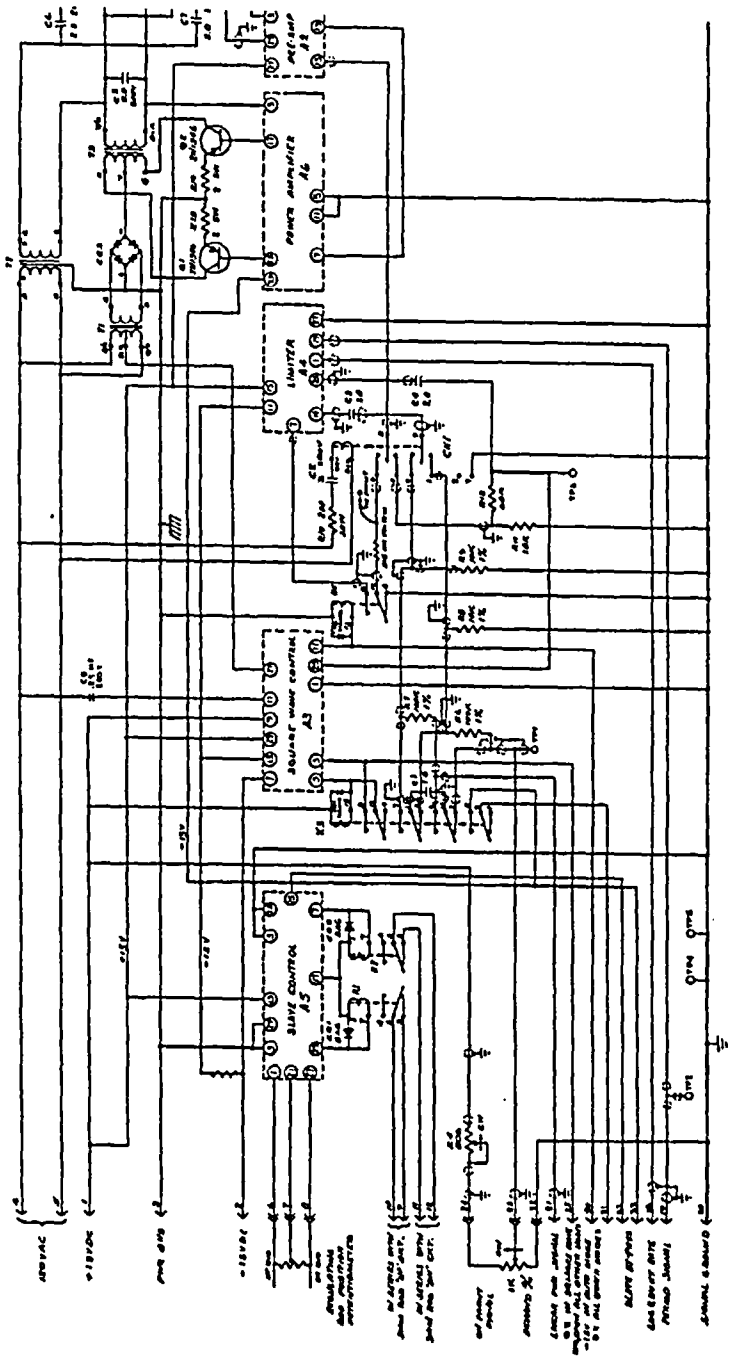

Figure 7.6: Power Regulation System Schematic

7.3.2.2 *Limiter*

The input to the limiter is a 60-cps square wave, the amplitude of which is proportional to the difference between the actual power level and the demand power level. The signal comparison was explained in general terms under the overview. The following paragraph explains the generation of the error signal in more detail.

The 0 to 10 V power level input signal is applied to a lead compensation network consisting of C1, R7, and R9. The output of the network is applied to terminal 8 of the chopper. The 0 to 10 V power demand signal is applied to an attenuation network consisting of R6 and R8. This network balances the steady state loss of the lead compensation network in the power level circuit. The attenuated demand signal is applied to terminal 1 of the chopper; the 60-cps square wave, proportional to the difference between actual power and demand power, appears at terminal 9 of the chopper and is capacitively coupled to the limiter output.

The limiter printed circuit board contains two op-amps. Amplifier A1 has a gain of 100; its output is limited to +4.7 V by two breakdown diodes, CR1 and CR2. The ratio of resistor R3 to resistor R2 determines the gain. R1 is a swamping resistor to reduce the input impedance.

Amplifier A2 is used to amplify the period signal brought in on terminal 29. R6 is the gain control that adjusts the magnitude of period information feedback. Because this is a feedback signal, maximum signal means minimum loop gain and vice versa. Reducing the potentiometer sufficiently will cause the loop gain to go outside the stable region. Amplifier A2 has a gain of 7.

The output of the limiter amplifier and the period amplifier, A2, are compared by means of the chopper contacts and fed to the preamplifier. The period amplifier A2 output is fed through the contacts of relay K4. K4 keeps the period circuit open for all modes except automatic.

7.3.2.3 *Power Amplifier*

The power amplifier consists of a preamplifier in Q1 and a push-pull driver consisting of Q2 and Q3, driving the push-pull output transistors Q1 and Q2 located on the power regulator chassis.

The primaries of interstage transformers T2 and T3 are resonated to 60 cps via parallel capacitors C4 and C5 to provide for minimum phase shift through the amplifier.

Q1 is stabilized for DC by the bypassed emitter resistor R4 and for AC by the feedback from the output stage, via R9. Q2 and Q3 are protected from being overdriven by D1.

The output transformer, T3, and power supply transformer, T1, are mounted on a sub-plate.

The collector supply for the output stage is full-wave rectified by the bridge rectifier group CR3. No filtering is required because the peaks of the rectified supply voltage are in phase with the 60-cps signal carried by the amplifier. The use of unfiltered power to the output stage collectors reduces the amount of power the transistors must dissipate.

Transformer T2 and capacitors C6 and C7 are related to the power amplifier. Transformer T2 provides reference phase excitation to the servomotor and the tachometer. C6 and C7 provide the required phase shift. T2 is used for isolation only. However, the phasing of the primary and secondary circuit is

important. If the phase is shifted 180° by interchanging the leads of either pair, the complete power control loop will fail to operate properly.

Capacitor C5 is connected across the output transformer to correct the power to correct the power factor of the output and motor circuit. There are two other components, R10 and C2, which are related to the phase relationships of the system. These components form a phase lead network to compensate for the lag inherent in the electromechanical chopper.

7.3.2.4 *Preamplifier*

There are two input signals to the preamplifier. One is the difference between the limited power error signal and the period information; the other is a tachometer feedback signal from the rod drive. This difference signal or second error signal is capacitively coupled to a three stage amplifier consisting of Q1, Q2, and Q3. R6 is connected in an internal feedback loop and provides a means of adjusting the loop gain to the power regulator. Increasing the resistance of the rheostat reduces the amount of signal feedback, thereby increasing the gain. Q3 is an emitter follower stage providing low impedance output to the summing stage, Q4. This summing stage adds the amplified error signal from Q3 to the tachometer signal on terminal 29. The result is a signal that is the difference between an error signal and the motor speed signal. Q5 is an emitter follower stage providing a low impedance output signal and DC feedback to Q4 to stabilize the transistor bias system.

Tachometer feedback in this regulator permits operating the system with a higher forward loop gain than would otherwise be possible. This higher loop gain reduces the amount of deadband in the system and reduces the effective time constant of the motor-rod drive system.

7.3.3 RCS Interlocks

A number of interlocks exist that inhibit control rod movement. These interlocks are described in this section.

A source level interlock is obtained by a low signal trip bistable on the log power level channel. Relay K13 is energized by a relay and a bistable in the Wide Range chassis when the source count is above a preset value, and by relay K3. Contacts 5 and 6 on K13 energize an annunciator on the left annunciator panel. Contacts 1, 4, 8, and 11 provide the rod interlock signal when K13 is de-energized. This will automatically prevent the movement of the control rods (up or down) if source level is below a given preset value. This assures that sufficient neutrons are available for proper operation of the startup log power level channel.

To prevent bypassing the minimum source requirements when running the log power meter upscale with the safety channel 1 test trip switch, a control rod inhibit is applied to the control rod switches when the test trip switch is turned on.

In order to prevent more the one rod from being raised at a time in steady state (manual) mode, the UP switches are arranged so that when one is activated it feeds an interlock signal to the next, i.e. S8 to S9, S9 to S11, etc. This assures that the addition of reactivity will be properly controlled.

In automatic operation, the regulating rod motor leads are removed from manual operation and are connected to the output of the servoamplifier. An interlock signal through the regulating rod drive limit switches removes power from the servo whenever a scram occurs or whenever the rod drives down to its down limit. The rod must be removed from its bottom limit while in steady-state mode before the servo

can be reenergized. It is possible to raise one other (shim) rod while the servoamplifier is raising the regulating rod in automatic mode.

The beam port and through tube shield plugs are interlocked with the console electrical power and provide an external reactor operate permit. Removal of the outer shield plugs inhibits the energizing of the control console thereby preventing the use of the control rod drives. The plug interlocks can be bypassed with a bypass key to allow operation with the shield plugs removed. An annuciator panel on the far right of the control console will indicate any bypassed electrical connections of the shield plugs.

7.4 REACTOR PROTECTION SYSTEM

The MUTR is equipped with safety systems typical of most non-power reactors. The control rods, rod drives, scram circuitry, and interlocks have performed reliably in the MUTR since they were installed in the early 1970's. This section will describe the reactor power monitoring systems and the reactor scram systems. Figure 7.1 shows an overview of the entire RCS and RPS systems and Figure 7.7 shows a schematic overview of the RPS systems.

7.4.1 Power Monitoring Systems

There are three power monitoring systems for the MUTR. They are the Log Power, Safety 1, and Period system, the Wide Range Linear system, and the Safety 2 system. The following subsections will describe each of these systems in detail.

7.4.1.1 *Log Power, Safety 1, and Period*

The log power channel provides the reactor operator with a continuous record of neutron flux source level to full power. Unlike the Wide Range Linear Power channel, the log-n covers the entire power spectrum without switching interruptions. The log-n circuit consists of a fission chamber, a log amplifier, and the second channel of the dual pen recorder. By using the DC component of the signal, a linear channel is derived for a safety channel (Safety 1) to which a bistable trip is connected along with a meter to indicate 0 to 150 % power. The log-n amplifier also produces a voltage proportional to the logarithm of the neutron flux. A derivative circuit produces a voltage proportional to the inverse of reactor period, which is then amplified by an op amp and displayed on a control panel meter that is calibrated in seconds (-30 to ∞ to +3 s). An adjustable bistable scram is provided for the period.

7.4.1.1.1. Wide Range Log Power Channel

The wide range log power channel measures ten decades of neutron flux in a gamma background of about 10^5 R/hr, see Figure 7.8 for a schematic of the channel. It operates from a single fission counter, and the full ten decade range is read out on both a single meter and on a chart recorder. Using the fluctuating (AC) portion of the signal from a fission chamber, the channel combines a pulse log count rate technique for the lower five decades with a log Campbell technique for the upper five decades to produce a single output signal for the total range of ten decades. Both techniques are affected very little by high gamma background, and the method used for combining them eliminates errors due to gamma and alpha background as well as resolution counting loss error normally associated with high rate counting.

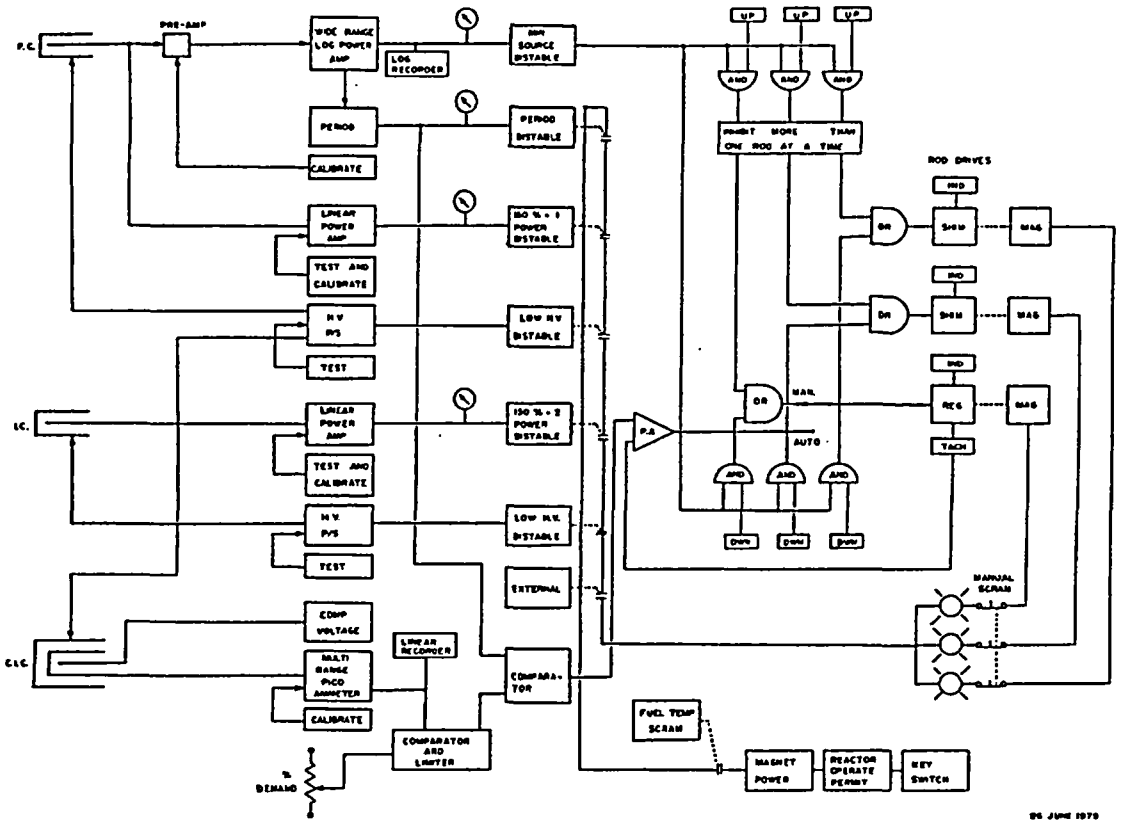

Figure 7.7: Control Console Schematic Diagram

The circuitry is all solid state modular construction; and since no mechanical switching or combining techniques are used, the reliability is high and the response time is adequate for any power reactor transient. Test and calibration circuits are provided which feed appropriate signals into the input of the preamplifier for checking six calibration levels. This method checks and calibrates all of the electronics (including the preamplifier), and a positive test for the chamber and cable integrity is also provided. In addition to a chamber high voltage power supply, the instrument contains also a period circuit with meter display and three bistable trips which include fission chamber high voltage monitor (low level), power (high level), and period. In order to allow the connection of a linear power channel to the same chamber a DC filtered output from the fission chamber is brought to the channel chassis with the preamplifier power cable, and the output DC signal is available at the multi-pin connector.

The Campbelling technique of neutron flux measurement uses the AC component of the signal from a fission chamber rather than the DC component. It has been demonstrated both theoretically and experimentally that if the DC component is removed and the AC component is rectified with a linear averaging type rectifier circuit, the resulting DC signal is proportional to the square root of the neutron flux at the detector over a wide range of flux. Alpha noise and gamma pulses do affect this relationship at low values of neutron flux, but the design of this wide range log channel is such that these effects are eliminated from the output.

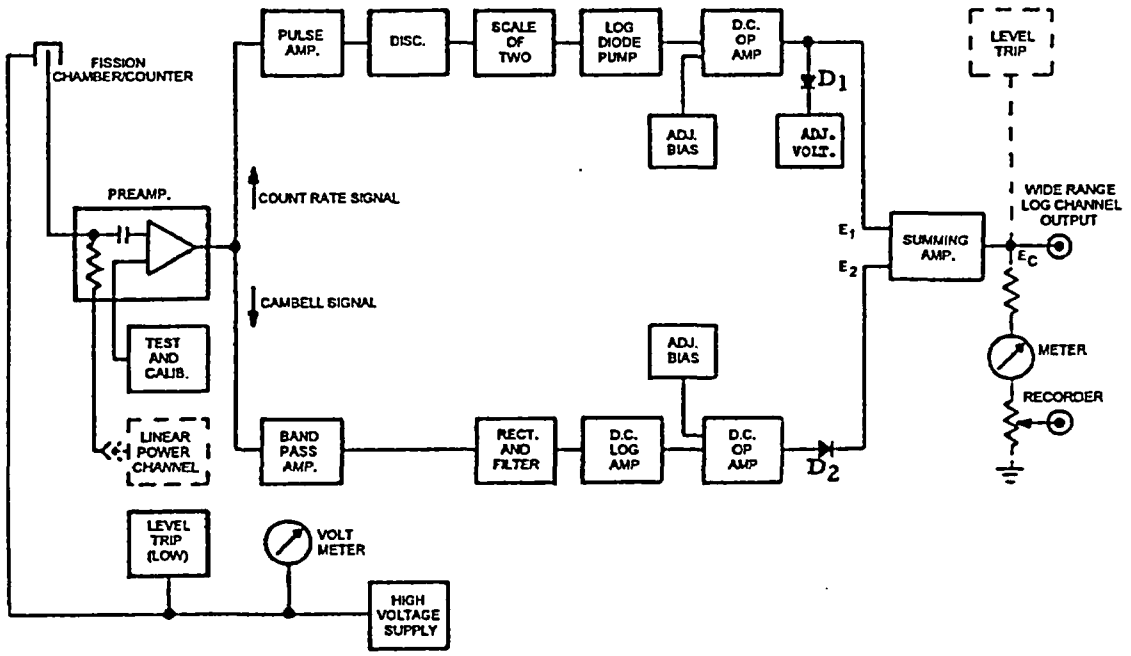

Figure 7.8: Wide Range Log Power Channel Block Diagram

As shown in the block diagram, Figure 7.8, the wide range log power channel consists of a log count rate section and a log Campbell section, working out of the same fission chamber and preamplifier. Their output signals are combined in such a way as to give a single output indication of log power and at the same time eliminate normal limiting errors of each one.

The high frequency pulse signal components pass through a conventional log count rate circuit utilizing a discriminator, flip-flop, and multiple diode log pump circuit. This circuit will give an output voltage, E1, proportional to the log of the count rate from about 0.3 cps to 300 000 cps. A biased diode, D1, is used to cut off that portion of the response that is adversely affected by resolution counting loss (usually at about $2x10^5$ nV). As is customary with log count rate circuits, the log diode pump utilizes fixed low temperature coefficient components to obtain the log relationship. The output of the pump circuit passes through a DC op amp with adjustable level.

The low frequency components governed by the Campbell bandpass amplifier pass through a stable DC log amplifier to give a log indication of power from about $2x10^4$ nV to $2x10^{10}$ nV. The diode, D2, allows only signals above zero volts to pass; hence, by biasing the output of the amplifier, the lower end of the response curve below about $2x10^5$ nV may be eliminated. Part of this lower portion of the curve may be adversely affected by gamma and alpha background noise, imperfect rectification, and lack of pulse overlap. A gain adjust at the output of the log amplifier allows the slope of E2 to be properly adjusted to match that of E1. Since the bias cutoff points can be adjusted to coincide, a smooth, fast, all-electronic transition is made from counting to Campbelling or vice versa.

The preamplifier feeding the wide range channel is an all solid state charge preamplifier mounted in a moisture resistant gasketed aluminum can. It is double shielded so that the outer can with the mounting lugs can be bolted to the reactor ground structure and the inner can will be isolated and connected to instrument ground. It receives its power from the channel power supply through low voltage cable that also provides a DC chamber current return lead. The preamplifier consists of a high gain feedback broad band amplifier

followed by a low impedance cable driver. The input impedance of the preamplifier is quite low, so that chamber and cable capacitance have little effect.

7.4.1.1.2. *Period Amplifier*

The period circuit consists of two amplifiers – an inverter, A1, and a differentiating or rate of change amplifier, A2. Shunt switch Q2 makes the differentiating section inoperative during some switching operations. Amplifier A1 normally operates as a gain of 0.5 inverter supplying to the differentiator a negative DC potential, which is proportional to the logarithm of the reactor flux. Amplifier A1 operates as an integrator or ramp generator when in the calibrate mode. A2 is a differentiating amplifier designed to reduce responsiveness at high frequencies (noise) and to the variation in flux signal at low flux levels in a manner that does not greatly impact response time. The shunt switch Q2 acts to suppress transients from occurring when switching from CALIBRATE to OPERATE.

7.4.1.1.3. *Safety Channel 1*

Safety Channel 1, associated with the fission chamber and the Wide Range Log Power channel, is identical to Safety Channel 2. The description for this channel, therefore, is identical to that for Safety Channel 2, which is addressed in section 7.4.1.3.

7.4.1.2 *Wide Range Linear Power*

The linear power channel provides power level indications from just above source level to 300 kW. The linear power circuit consists of a compensated ion chamber, a linear amplifier, a recorder, and a fifteen stage range switch. The range switch is used to select a particular power scale for recorder display. The linear amplifier's output signal, which is a function of a linear indication of reactor power, is fed to the servo amplifier as part of an automatic reactor control circuit, see Section 7.3.2.

The multirange Linear Pico-ammeter is a DC current measuring instrument specifically designed for use with nuclear reactors. It consists of a high input impedance linear current amplifier and a range switch to select the input current sensitivity of the amplifier. The channel receives an input signal from a compensated ion chamber located in the neutron field to be measured. All signals, except those from the neutron detector, that enter or leave the assembly are isolated from essential circuits to prevent external fault currents from destroying vital circuit functions.

The Linear Pico-ammeter input stage is a varactor diode op amp which converts the ionization chamber current to a voltage that is proportional to the input current . Full scale output of 10.00 V may be obtained with input currents between 10^{-10} to 10^{-3} A in fifteen ranges.

Test and calibration signals are built into the channel and are controllable from the range selector switch.

The circuits are all solid state utilizing high quality epoxy glass and Teflon component boards. Monolithic integrated circuits are used as the active elements where possible.

Primary power for the channel is obtained from modular ±15 V, 0.05 % regulated power supplies.

7.4.1.3 *Safety Channel 2*

Safety Channel 2 operates from an uncompensated ion chamber and consists of the chamber, an op amp, an adjustable bistable, and a continuous reading meter. This circuit provides the second safety scram point, adjustable to 150 % power.

The Safety Channel is a DC current measuring instrument specifically designed for use with nuclear reactors. It consists of an ionization chamber located in the neutron field to be measured, followed by special subcircuits to process and evaluate the information received. All signals, except those from the detectors, that enter or leave the assembly are isolated from essential internal circuits to prevent external fault currents from destroying vital circuit functions.

The Linear Amplifier is the input stage of the subchannel. Within this circuit the ionization chamber current is converted to a proportional voltage output signal. Full scale of 10 V (equivalent to 150 % reactor power) may be obtained with input currents between $3x10^{-3}$ to $2x10^{-5}$ A with 0.5 % accuracy.

Test and calibration signals are built into each channel and are controllable from the front panel. The circuits are all solid state utilizing high quality epoxy glass plug-in printed boards. Many use only monolithic integrated circuits as the active elements.

Primary power for the channel is obtained from the 115 VAC mains. Modular ±15 V power supplies are included within the drawer assembly along with an adjustable modular high voltage supply.

Circuit boards and switches are interlocked to indicate removal of a board or incorrect position of a switch.

7.4.2 Scram Functions

The MUTR has 10 different scram functions, depicted in the scram block diagram in Figure 7.9. These are Safety Channel 1, Safety Channel 1 Low High Voltage, Safety Channel 2, Safety Channel 2 Low High Voltage, Reactor Period, Fuel Temperature, Bridge Radiation Area Monitor, Exhaust Radiation Area Monitor, Manual Scram, and Loss of Console Power.

The scram circuitry consists of the magnet power supply, scram relays K1, K7-K2, K23, reactor operate permit, manual scram switches S3-S7, and the scram reset relays K19, K20, and K24. In series with the manual scram relay K11 is the interlock circuitry. A manual scram will occur wither by depressing the manual scram bar or if any board is removed from the Wide Range Log or Safety Channel, except bistables, or a switch is in other than the operate position.

The remainder of this section will briefly describe the components of the scram system.

7.4.2.1 *Magnet Supply*

The magnet supply consists of transformer T3, a diode rectifier bridge, and capacitor C1. Primary power is applied to the magnet supply via the reactor operate interlock located outside the console. Magnet power is supplied to the rod drive magnets and scram relay K1 through the Magnet Power Keyswitch and series scram bus consisting of relays K7-K12 and K23.

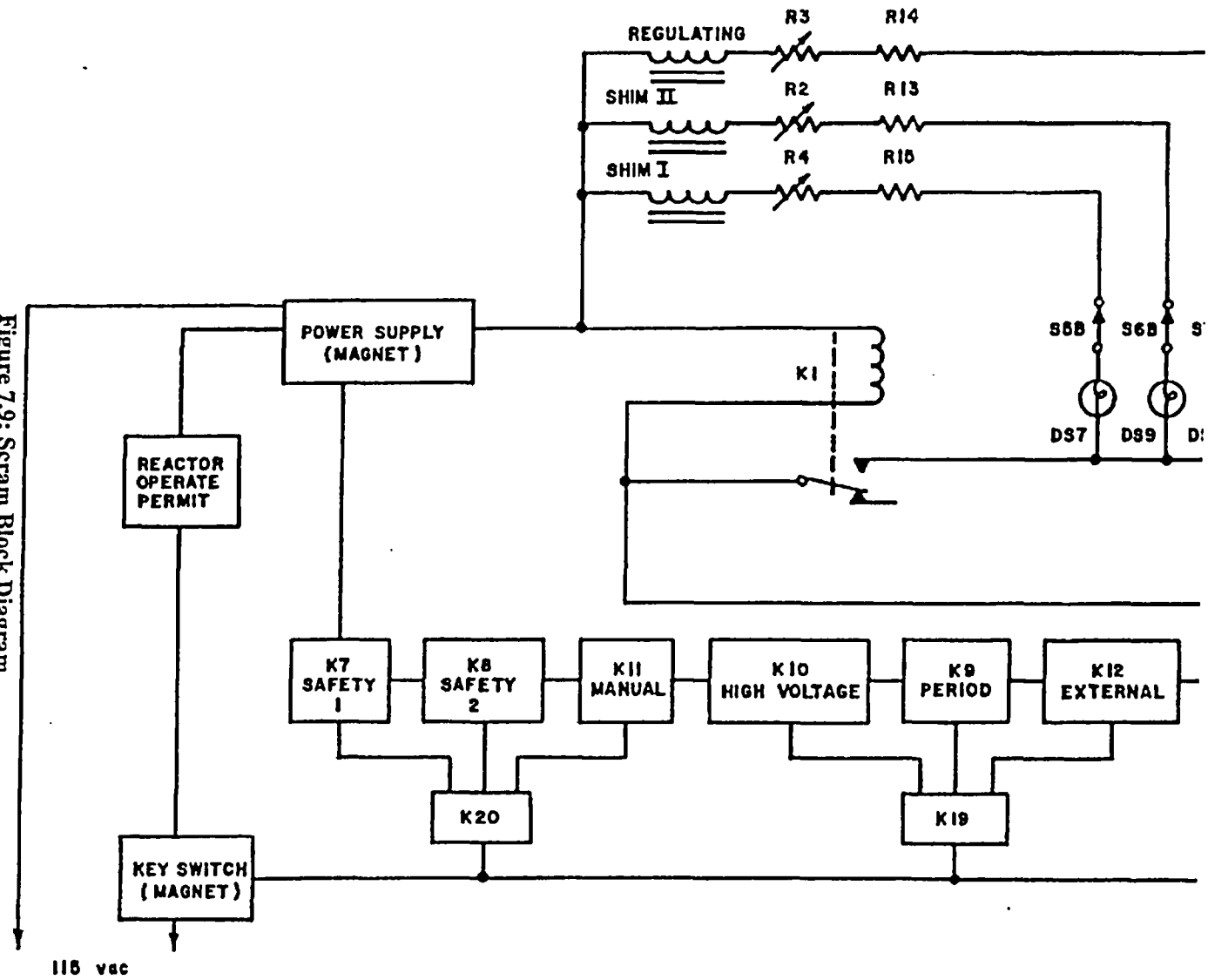

Figure 7.9: Scram Block Diagram

7.4.2.2 *Scram Relays*

The output of the MAGNET POWER supply is applied to the coil of the magnet scram relay K1 through the series scram bus consisting of relays K7 (Safety 1), K8 (Safety 2), K9 (period), K10 (detector high voltage), K11 (manual), K12 (external, e.g. RAMs), and K23 (fuel temperature). Relays K7 through K12 and K23 are energized by the reset position of MAGNET POWER switch and the reset relays K19, K20, and K24. They remain energized by holding voltage on contacts 1 and 3. This voltage is provided by the individual scram circuits. Contacts 5 and 6 on relays K7-K12 and K23 energize the scram annuciators on the control console when the relay is de-energized by a scram. In addition to the relay contacts associated with scram annuciation and scram in the negative magnet supply line, a N.O. contact from the Bistable trip mercury wetted relay in each scram channel is connected in series with the positive side of the magnet power supply.

The scram relay K1, when energized by the scram bus, provides power to the magnet on indicator lamps DS5, DS7, DS9, and DS11. These indicators are in series with the rod drive magnets and indicate that power is applied to the magnets.

7.4.2.3 *Scram Bar*

The manual SCRAM BAR, de-energizes relay K1 via the parallel connected switches S3A, S4A, S5A, S6A, and S7A, thereby interrupting the series scram bus and de-energizing scram relay K1. Individual magnets can be de-energized by depressing switch S3, S4, S5, S6, or S7 individually.

7.4.2.4 *Scram Reset*

When scram relays K7-K12 and K23 are de-energized by a scram, they remain de-energized until reset by the scram reset relays K19, K20, and K24. The reset relays are energized by the reset position of the MAGNET POWER key switch, which is a momentary contact, spring return type switch.

7.4.2.5 *Bistable Trip*

The bistable trip, see Figure 7.10, is a high sensitivity level detector utilizing an integrated op amp with positive feedback to sense increasing or decreasing signals. Generally, two bistable trip circuits are mounted on one printed circuit board. The threshold level is set by means of R5 (or R55) depending on which section.

When the input signal crosses the reference threshold, the output of the op amp swings from 0 V to +13 V. Transistors Q1 and Q2 are switched "off" and the relays are de-energized. A self-latching circuit is obtained when SCR1 (SCR51) closes the external indicator circuit. Reset is obtained with a series pushbutton switch.

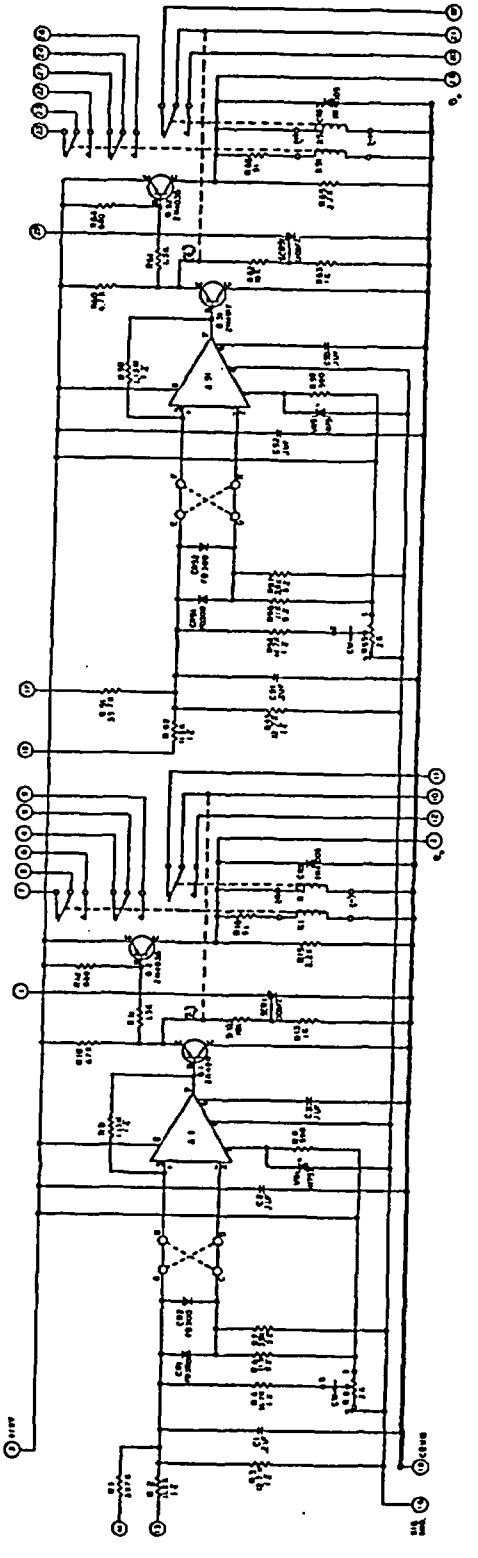

Figure 7.10: Bistable Trip Schematic

7.5 ENGINEERED SAFETY FEATURES ACTUATION SYSTEMS

The MUTR has one ESF and that is the reactor building ventilation system. This system consists of two roof mounted exhaust fans and four intake louvers. Both the exhaust and inlet louvers are motor operated and fail close. The louvers and the exhaust fans are operated off three motor-contactor boxes. In the event of high radiation in the reactor building, see section 7.7, power is removed from the coil in the contactor boxes which causes the exhaust fans to stop and the motor operated louvers to close.

7.6 CONTROL CONSOLE AND DISPLAY INSTRUMENTS

The reactor possesses three groupings of controls and displays. The first grouping is the original General Atomics TRIGA control console. The second grouping is the upper console. The third grouping is the auxiliary console. The TRIGA control console and upper console allow the operator to see outputs from all the display systems needed for safe operation of the MUTR, see Figure 7.11. The auxiliary console contains systems that not needed during operation or are only needed during experiments, see Figure 7.12.

The original TRIGA console is broken up into three panels of instrumentation displays and controls. The left panel, Figure 7.13, contains the following instrumentation and controls:

1. Log Percent Power Meter driven by the Fission Chamber
2. Safety 1 Percent Power Meter driven by the Fission Chamber
3. Reactor Period Meter driven by the Fission Chamber
4. Log/Safety 1 Calibrate Test Switch
5. Safety 1 Trip Test Switch
6. Reactor Period Calibrate Test Switch
7. Reactor Period Trip Test Switch
8. Safety 1 High Voltage Trip Test Button

The center panel, Figure 7.14, contains the following instrumentation and controls:

1. Scram Annunciators
2. Manual/Automatic Mode Switch
3. Keyswitch and Console Power Button
4. Control Rod Position Indicators (left to right: Shim 1, Shim 2, and Reg Rod)
5. Chart Recorder with Blue Pen = Log Percent Power and Red Pen = Linear Power driven by the Primary Compensated Ion Chamber
6. Control Rod Drive Motor Buttons, Indicator Lights, and Scram Bar
7. Range Selector Switch for Red Pen
8. Control Buttons for pumps, fans, and startup source
9. Automatic Mode Percent Demand Dial

The right panel, Figure 7.15, contains the following instrumentation and controls:

1. Evacuation Alarm Button
2. Safety 2 High Voltage Trip Test Button
3. Safety 2 Percent Power Meter driven by the Ion Chamber
4. Bulk Water Meter with Setpoint Knob for Bulk Water Alert Light
5. Fuel Temperature Meter
6. Safety 2 Calibrate Test Switch
7. Safety 2 Trip Test Switch
8. Bulk Water Meter Switch
9. Fuel Temperature Trip Test Switch
10. Fuel Temperature Calibrate Test Switch and Trip Test Select
11. Beam Port and Through Tube Status Indicators.

The Upper Console is also divided into three panels in the same manner as the TRIGA Console. Only the left and right panels currently possess instrumentation. The left panel, Figure 7.16, contains the following instrumentation and controls:

1. Door Buzzer
2. Phone
3. Exhaust Monitor
4. Bridge Monitor
5. Glove Box Monitor
6. Calibration and Test Circuitry for Bridge and Exhaust
7. Status Indicators for Facility Entrances

The right panel, Figure 7.17, contains the following instrumentation and controls:

1. BTU Computer, displays flow rate and heat removal for HX 1.
2. Pool Temperature
3. Pool Temperature
4. HX 1 Primary In
5. HX 1 Primary Out
6. HX 1 Secondary In
7. HX 1 Secondary Out
8. Fuel Temperature
9. Kilowatt Hour Meter and Power Switch
10. Makeup Water On Light
11. Conductivity Alert Light
12. Pool Level Meter
13. Sump Level Meter

The Auxiliary Console, shown in Figure 7.12, contains the following instrumentation and controls from the top down:

1. Conductivity Meter
2. Evacuation Alarm Reset Button and Intercom System Controls
3. Pneumatic Transfer System Controls
4. NIM Bin

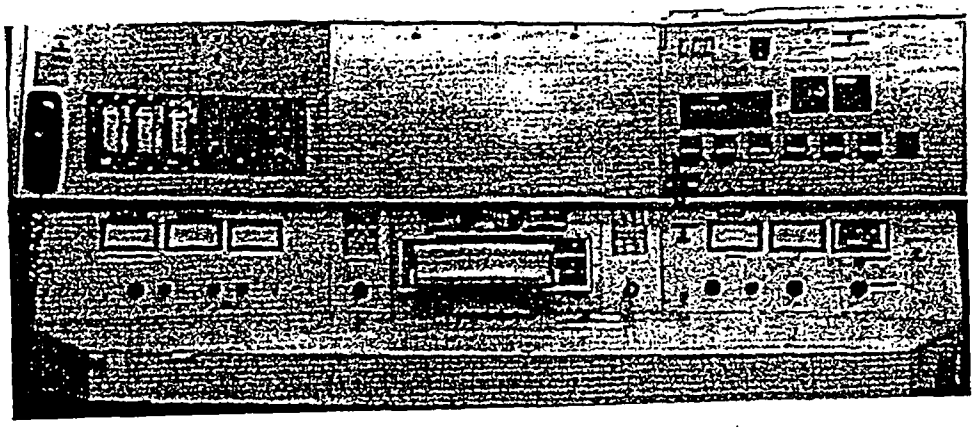

Figure 7.11: TRIGA Console and Upper Console

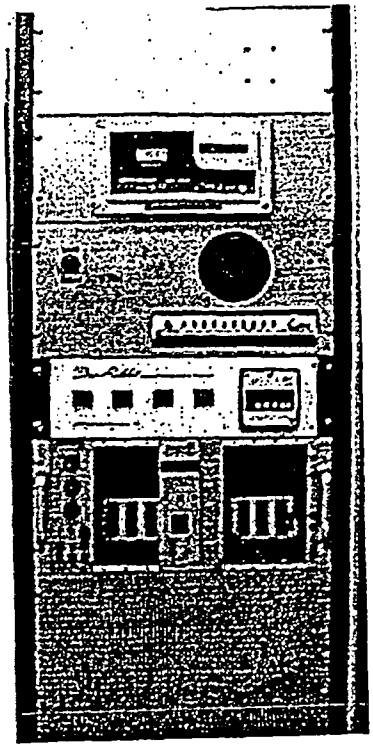

Figure 7.12: Auxiliary Console

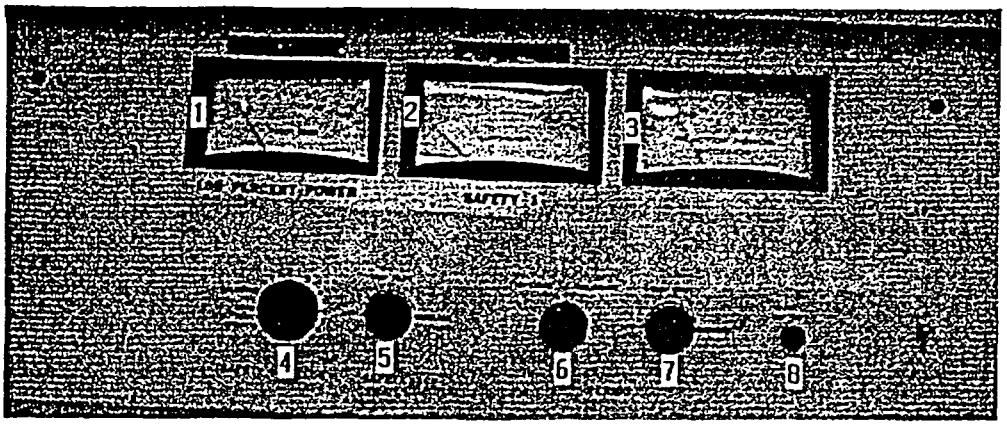

Figure 7.13: Left TRIGA Console Panel

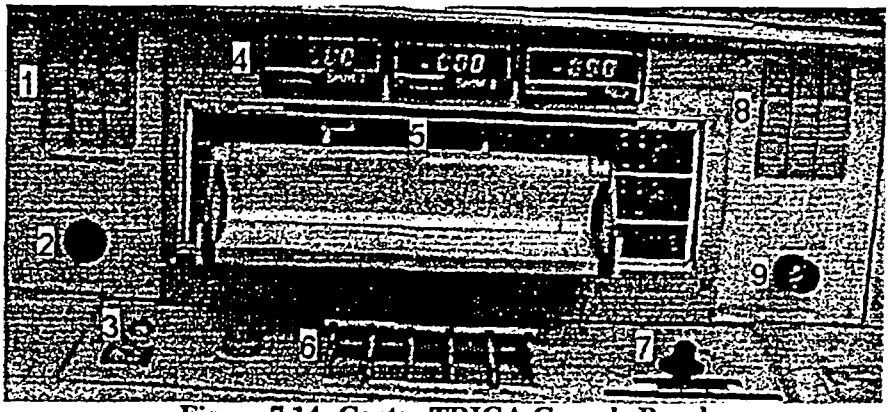

Figure 7.14: Center TRIGA Console Panel

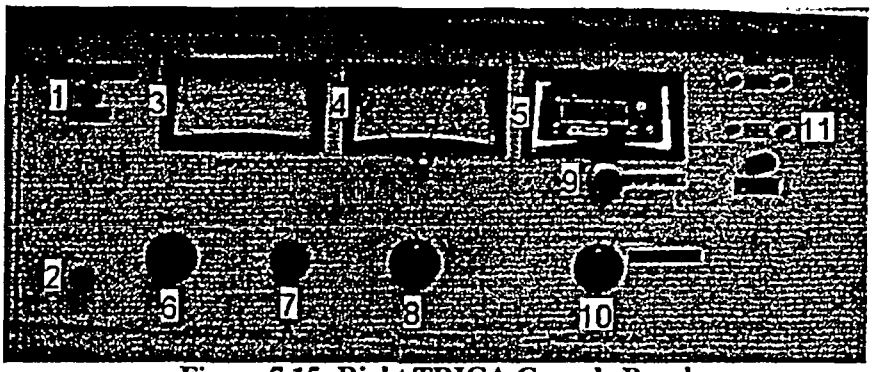

Figure 7.15: Right TRIGA Console Panel

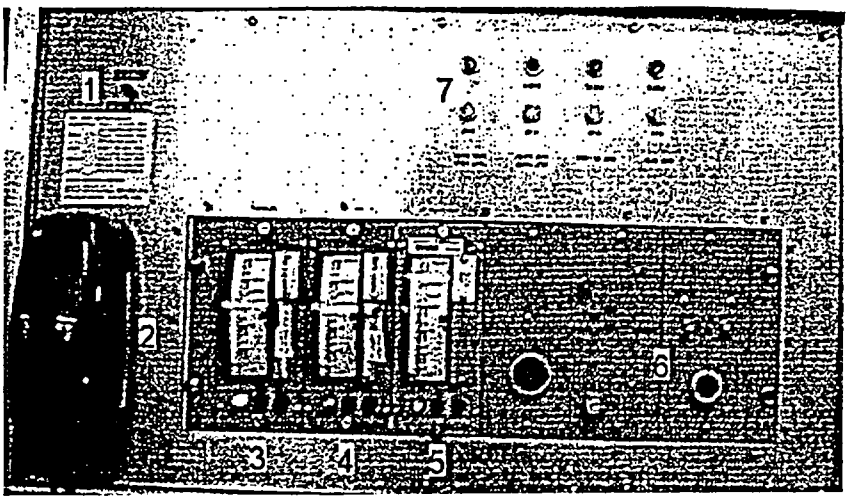

Figure 7.16: Left Upper Console Panel

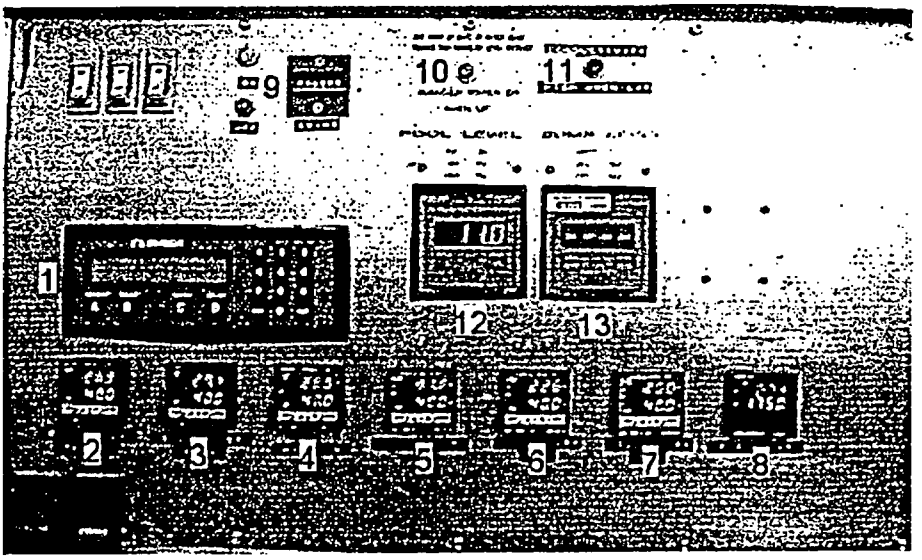

Figure 7.17: Right Upper Console Panel

7.7 RADIATION MONITORING SYSTEMS

The reactor is equipped with a radiation monitoring system to monitor radiation levels inside the reactor building and to notify staff of excessive levels. This system consists of three radiation detectors, a central readout on the control console, see Figure 7.16, and three remote displays.

The first radiation monitor is located in the hot room glove box. This monitor is used to alert a staff member to high radiation levels resulting from an irradiated sample returning to the glove box from the reactor core. This monitor is displayed both on the reactor console and next to the door to the hot room.

The second radiation monitor is located near the exhaust vent on the east wall. This monitor is displayed both on the reactor console and on the doorway leading from the reactor bridge to the west balcony rooms.

The third radiation monitor is mounted on the reactor bridge cage next to the cage door. This monitor is displayed both on the reactor console and on the doorway leading from west balcony entrance area to the south balcony.

All three monitors are equipped with visual and audible indicators for indicating high radiation. Each monitor possesses two user definable setpoints. The first setpoint is an alert function, which displays an amber light when the setpoint is exceeded. The second setpoint is an alarm function which displays a red light and activates an audible alarm on both the reactor console and on the remote display for that monitor. The bridge and exhaust monitors also send a trip signal upon reaching their high radiation alarm setpoint. This trip function causes an external scram. This scrams the reactor and turns off and secures the reactor external ventilation system. The monitoring system will also send a trip signal if it loses the power supply to the monitors.

8.0 ELECTRICAL POWER SYSTEMS

8.1 NORMAL ELECTRICAL POWER SYSTEMS

Normal electric power for the reactor facility is from a three-phase feed taken off of the main building feed for the Chemical and Nuclear Engineering Building. This feed enters the reactor building along the wall opposite the East Experimental Ports and is split to two sets of panel breakers that redirect the feed throughout the facility. The feed provides 120/208 V three phase, four-wire, 60 Hz electric power to the facility at a maximum rate of 300 kVA. A third set of panel breakers is located in the West Balcony Foyer, which is fed off of one of the aforementioned sets of panel breakers. All the components of the electrical system are standard commercial components. Figures 8.1 through 8.3 diagram the electrical systems of the facility and the breaker panel layouts for control of those systems.

The external ventilation system is equipped with motor operated louvers with spring closures. In case of a loss of offsite power or failure of the motor louver circuit, the ventilation systems would failsafe to be in the closed position.

The MUTR biological shield as describe in section 4.4 consists of concrete, steel, and water. Operations experience has indicated that during periods of non-operation as long as three weeks have demonstrated neither a significant rise in water conductivity nor a significant decrease in the water level in the reactor pool tank. There is no conceivable scenario in which the MUTR would have a loss of offsite power extending beyond this time period.

In the event of a loss of offsite power, the MUTR will automatically shutdown as the control rods lose their magnetic coupling to the control rod drive motors. Since the MUTR is designed for natural convection cooling, no further electrical power is required to maintain the reactor core in a safe shutdown condition. In addition, the louvers for the reactor ventilation system will automatically close with the loss of electrical power.

8.2 EMERGENCY ELECTRICAL POWER SYSTEMS

Emergency power in the reactor facility consists of two systems. The first is a combination of battery powered emergency lights and exit signs to allow for safe egress from the facility. The second system provides power to the building security system. No emergency power is required for reactor protection functions.

8.3 CONCLUSION

Based on its review, the staff concludes that the electrical power provisions at the Maryland University Training Reactor are adequate to ensure safe operation. In Addition, it is concluded that in the case of loss of off site power, that the reactor will return to, and maintain a safe shutdown condition.

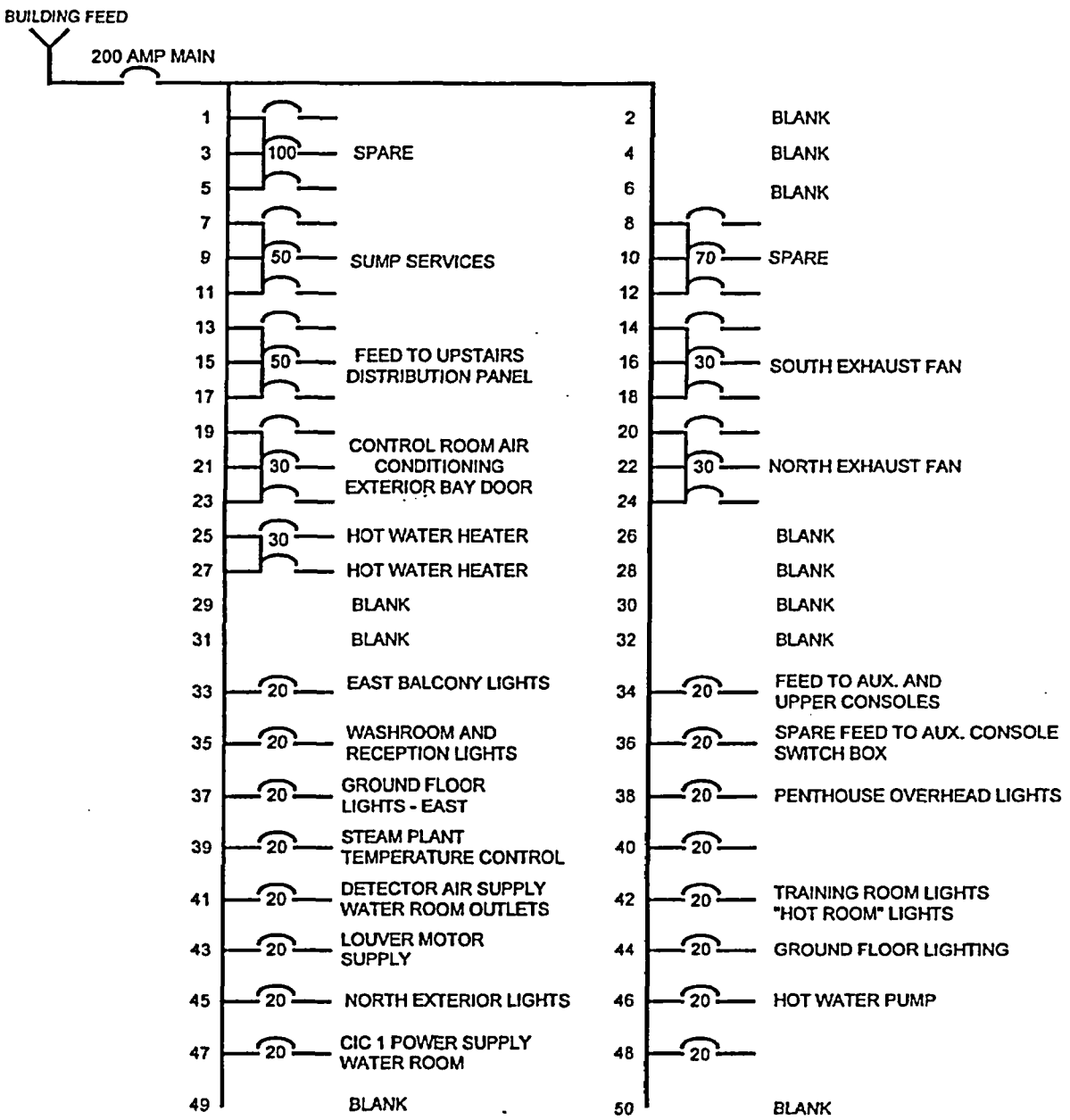

Figure 8.1: Breaker Panel #1 (East Beam Area)

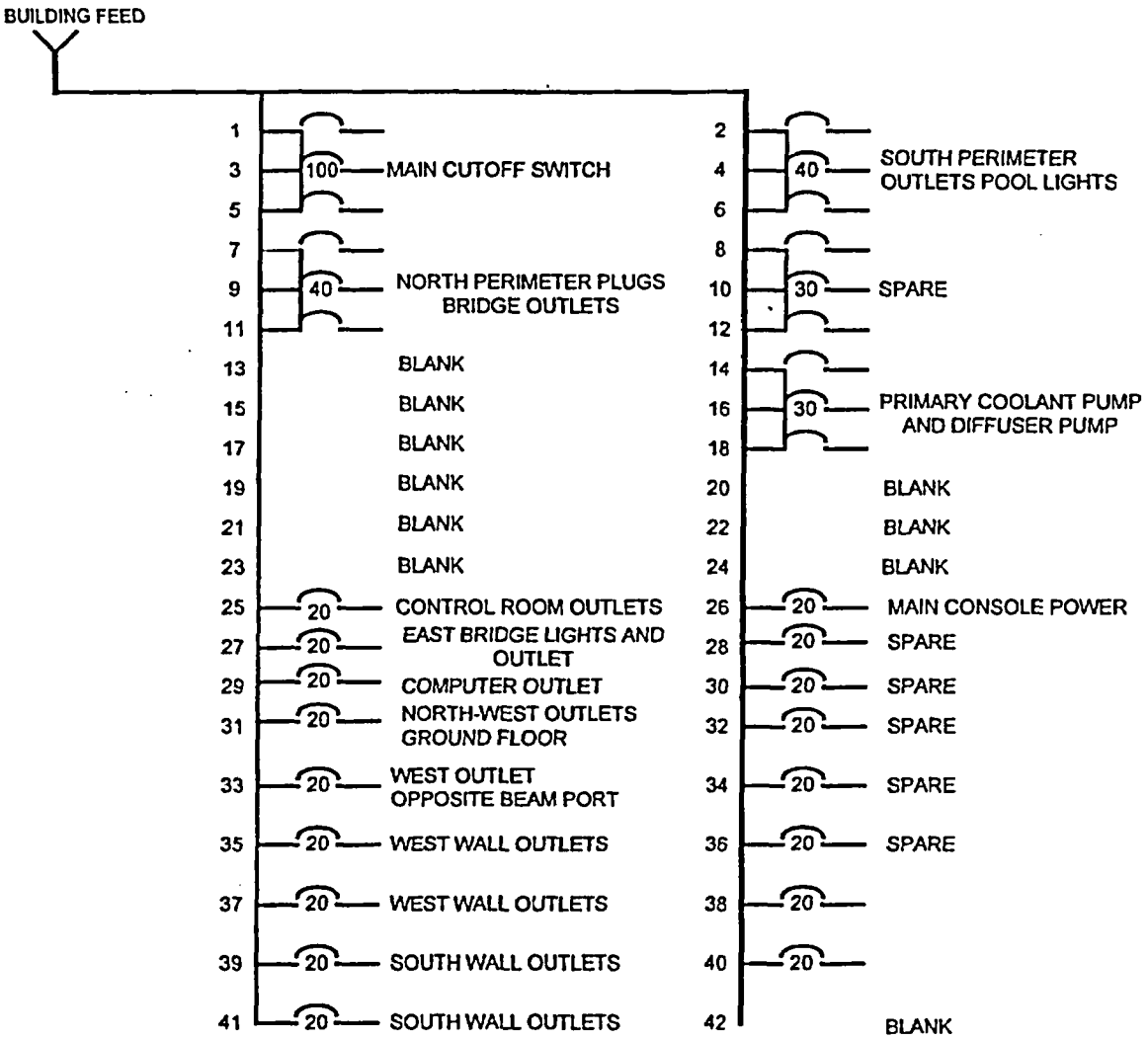

Figure 8.2: Breaker Panel #2 (East Beam Area)

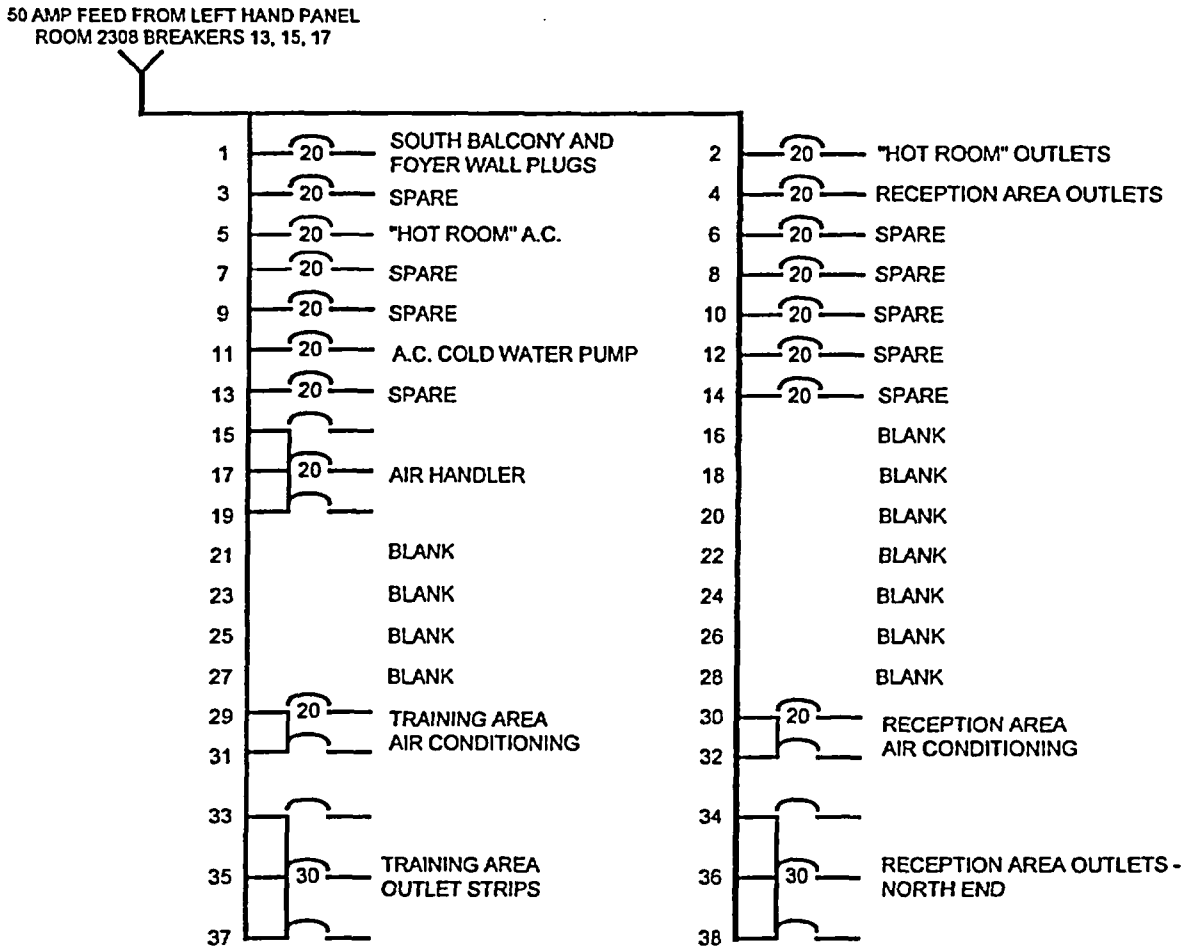

Figure 8.3: Breaker Panel #3 (West Balcony Foyer)

9.0 AUXILIARY SYSTEMS

9.1 HEATING, VENTILATIONS, AND AIR CONDITIONING SYSTEMS

The reactor building has two roof mounted ventilating exhaust fans and two motor operated intake louvers. The fans and louvers can be controlled from the control room and various locations throughout the building, see Figure 9.1. The exhaust fans are mounted on the northwest corner of the west penthouse wall and at the southeast corner of the east penthouse wall. The ventilation system is capable of exhausting 2.83 m^3/s (6000 cfm) of air to the roof vents at 7.32 m (24 ft) above the ground level. The minimum free air volume of the main reactor is 1700 m^3 (60 000 ft^3). The two motor operated intake louvers are mounted on the ground floor west wall. Two air conditioners in the exterior wall of the west balcony wall bring in air only. Air from the west balcony laboratories exhaust into the main reactor area through two motorized louvers and one air conditioner which is mounted in the pneumatic transfer system laboratory. An area radiation detector monitors the air exhausting from the west penthouse exhaust fan. In the event of a substantial release of radioactivity, the ventilation system will be secured automatically by a fail closed spring loaded mechanism. This action is initiated by a signal from the exhaust air radiation monitor.

The reactor climate control uses campus-supplied steam for heating and campus supplied chilled water for cooling. Heating is done by radiant heaters mounted along the walls of the upper and lower levels of the reactor bay. An air handler on the upper level of the reactor bay intakes air from the reactor bay, forces it across a tube bank through which flows chilled water, and exhausts the air back into the reactor bay. Neither the steam nor the chilled water comes into direct contact with the reactor spaces.

9.2 HANDLING AND STORAGE OF REACTOR FUEL

9.2.1 Fuel Storage Rack

The fuel storage rack consists of two rows of upright aluminum cans, the first row attached around the inside wall of the pool tank opposite the thermal column and the second row of three cans attached to the first row. It holds up to 13 fuel clusters in a non-critical array under 3.96 m (13 ft) of light water. A portion of the storage rack is shown in Figure 9.2. A criticality calculation on 13 TRIGA fuel assemblies in the storage rack using TWOTRAN, shows that $k_{eff} < 0.4$.

9.2.2 Fuel Cluster Handling Mechanism

A tool for handling the fuel-moderator and dummy elements is provided. The grappling head locks positively around the top end fixture of the elements and is released only when a lanyard is pulled.

In addition, there is a fuel handling tool for manipulating the four element fuel clusters. It consists of an 5.49 m (18 ft) long aluminum rod with a lock-closed claw to engage the fuel-cluster handling pin at one end and an operating handle at the other. The tool is lowered to the fuel cluster from the reactor bridge. The claw is closed and locked around the handling pin by a mechanism on the handle, and the cluster is lifted from the core and carried under water to the storage rack. There it is lowered into a holder and the tool is disengaged. This tool may also be used to handle reflector clusters.

Figure 9.1: Exhaust Fan Control Locations

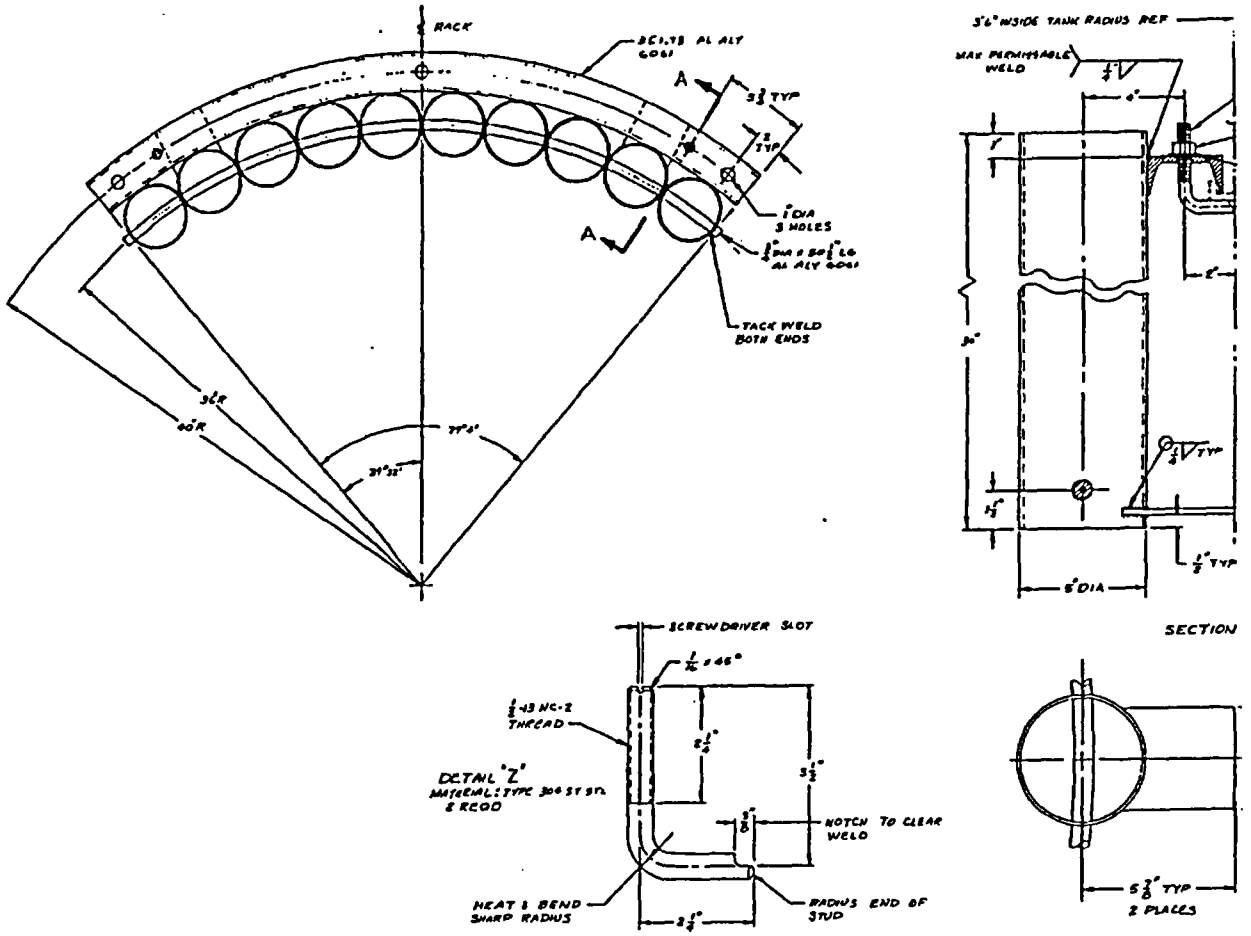

Figure 9.2: In-Pool Fuel Storage Rack

9.2.3 Fuel-Rod Transfer Cask

The fuel-rod transfer cask, Figure 9.3, is designed to permit the safe transfer of irradiated fuel rods and other radioactive material from the reactor tank to the fuel storage pits of a hot-cell facility. The cask consists of a steel casing filled with lead, and weighs approximately 2600 kg (5700 lbs.). The cask is 1.14 m (45 in) by 0.51 m (20 in) outside diameter, with a 5.1 cm (2 in) diameter cavity extending the full length of the cask to hold a single fuel rod. Eyebolts are provided on the top for the attachment of lifting cables. The bottom of the cask contains a 12.7 cm (5 in) high, steel-cables-sheathed lead plug that slides horizontally across the end of the fuel element cavity to provide shielding. This plug can be locked in place with a spring-loaded locking bolt attached to the cask. The top of the cask is equipped with a removable lead shield plug which is sized to pass through the central fuel-element cavity. The plug can be locked in position at the top of the cask with the rotating locking keys attached to the cask.

9.2.4 Fuel-Rod Inspection Tool

The fuel-rod inspection tool (MI-4A), Figure 9.4, designed by Gulf GA is used for inspection of a fuel rod for longitudinal growth and straightness.

The upper support plate of the tool is mounted with two 1.27 cm (0.5 in) bolts on an aluminum channel at the top of the reactor tank and extends downward into the tank, permitting the inspection of an irradiated fuel rod at an elevation which provides approximately 2.74 m (9 ft) of shielding water over the element. All parts of the tool in contact with water are either aluminum or stainless steel. The aluminum support-tube structure has a hole at the bottom and another at the top to allow shield water to fill the interior of the pipe.

The straightness of the fuel rod is inspected by inserting the rod into the cylindrical go/no-go gauge attached to the bottom of the tool. If a fuel rod will slide completely into the cylinder, its bow, if any, is less than 0.318 cm (0.125 in). If the element passes through the straightness gauge it will come to rest on the plunger in the lower end of the cylinder.

The length of a fuel rod is determined by comparing it with a standard rod of known length. The differential length is measured by the deflection of a plunger, which is linked, to a dial indicator at the upper end of the tool. The length of the fuel element is measured by screwing the indexing rod downward until the indexing plug shoulders on the reference plate. This places the upper surface of the fuel-element triangle spacer at an indexed position common to all fuel elements measured. Pushing the fuel element downward to this position forces the plunger downward an amount that varies with the length of the fuel element being measured. The plunger bears on a rocking beam the other end of which moves a drive rod upward an amount equal to the downward travel of the plunger. The dial indicator shows the vertical movement of the drive rod.

9.2.5 Fuel Storage Pit

In the event that fuel must be unloaded from the reactor pool, a storage pit in the north floor of the reactor building is provided. This facility is approximately 1.2 m (4 ft) wide and 1.8 m (6 ft) long, containing twenty-four cylindrical holes in concrete. The location of the pit can be seen in Figure 9.1. Each of the holes is about 15.2 cm (6 in) in diameter, lined with steel, about 1.5 m (5 ft) deep and fitted with a concrete filled steel plug about 0.61 m (2 ft) long for shielding. The pit is recessed and covered with a steel door. It has been calculated that the k_{eff} for this pit loaded with the TRIGA fuel is less than 0.8. This pit has been

used previously to store the irradiated MTR fuel, which was replaced be the new TRIGA fuel. Thus, it has a history of successful use.

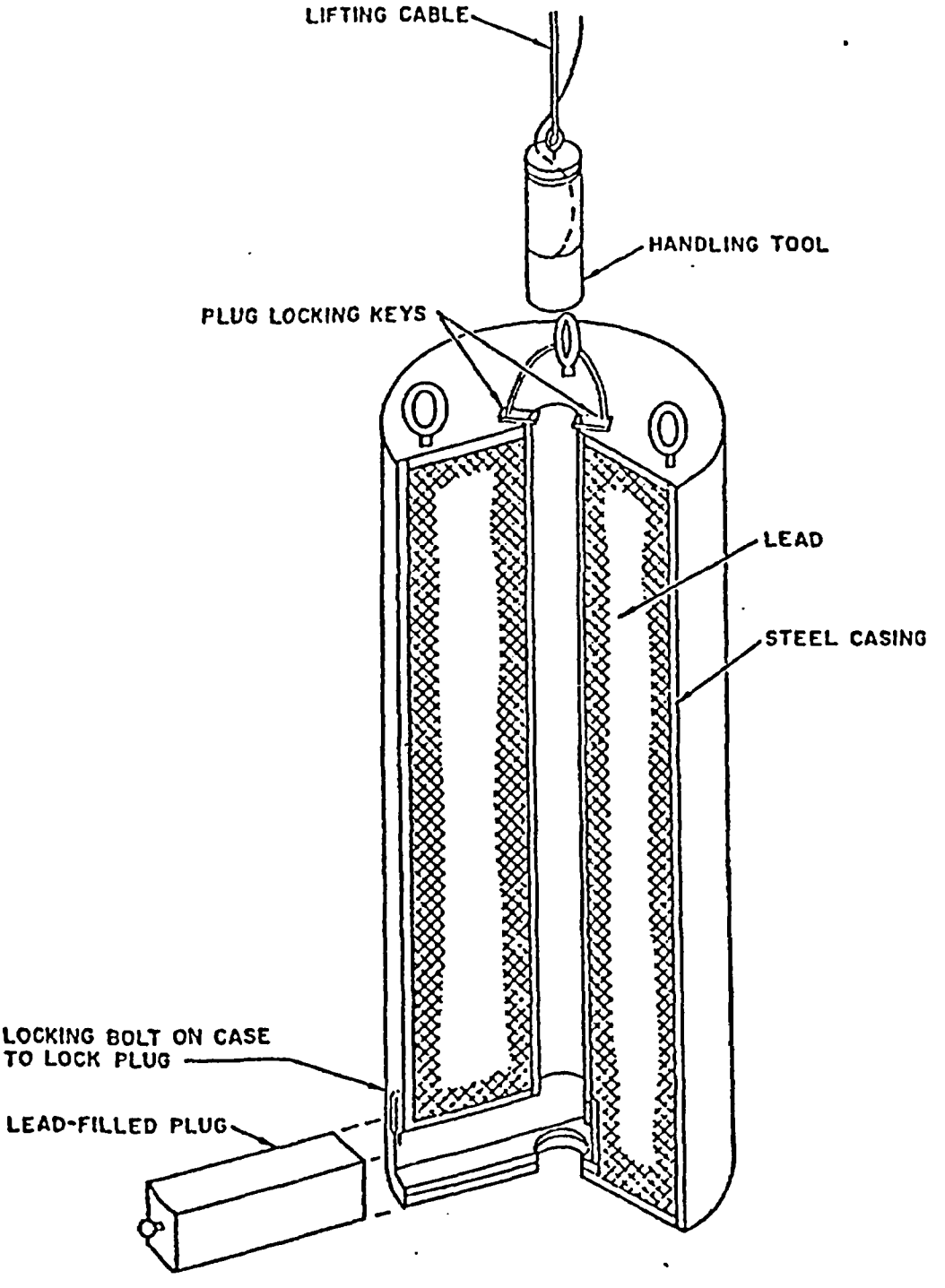

Figure 9.3: Fuel Rod Transfer Cask

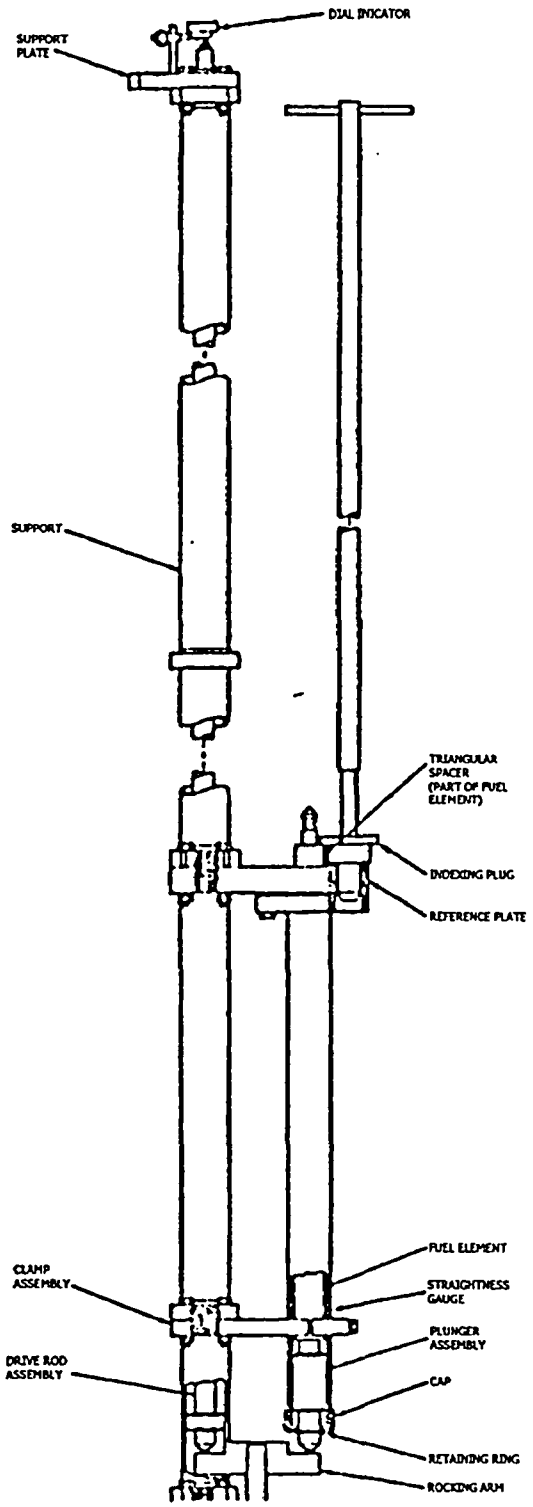

Figure 9.4: Fuel Rod Inspection Tool

9.3 FIRE PROTECTION SYSTEM

Fire protection in the MUTR consists of overhead sprinklers with fusable links and hand held fire extinguishers. Sprinklers are located on the east balcony and on the ground floor level under the balconies. ABC fire extinguishers are located in the control room, outside the water room, and near the lower foyer entrance.

9.4 COMMUNICATION SYSTEM

The central control for the reactor building intercom system is mounted on the auxiliary control panel in the control room. Remote intercom units, shown in Figure 9.5, are located on the reactor bridge, pneumatic transfer sample preparation laboratory, water handling room, at locations around the lower pool tank shield, and the ground floor reception room. In addition, an intercom unit is mounted outside of both south entrances into the facility. The upper entrance also has a video camera.

Telephones with an off-campus line are located in the control room, the upper and lower levels of the reactor bay, and in the west balcony. Additional phones are available in the Nuclear Engineering program offices. Lastly, campus emergency phones that are a direct link to the Campus Police Department are located in front of the Chemical and Nuclear Engineering Building and in front of the Animal and Plant Sciences Building.

The reactor operator can trip an audible emergency evacuation alarm from the control room. The alarm can be heard throughout the reactor facility. Also, a fire alarm can be used to sound an evacuation alarm, which can be tripped from various locations in and outside of the facility, Figure 9.5. This alarm can be heard throughout the Chemical and Nuclear Engineering Building and automatically notifies the police and fire departments.

9.5 POSSESSION AND USE OF BYPRODUCT, SOURCE, AND SPECIAL NUCLEAR MATERIAL

Use of radioactive materials in the MUTR is permitted in the Hot Room, on the Reactor Bridge, and on the lower level of the reactor building excluding the lower reception room. Use of radioactive materials in other locations of the facility is not permitted except for the use of sealed sources for detector calibration and the transfer of sealed or otherwise encapsulated sources from permitted use areas to other permitted use areas or for transfer out of the facility.

Special Nuclear Material and experiments undergoing irradiation are part of the reactor's license. All other radioactive material is part of a State of Maryland license.

Figure 9.5: Fire Alarm Pull Box Locations and Intercom Speaker Locations

10.0 EXPERIMENTAL FACILITIES AND UTILIZATION

10.1 SUMMARY DESCRIPTION

The reactor is primarily a training tool, but it may be used as a source of neutrons for activation studies and a source for neutron and gamma radiation for studies of effects on materials. The experimental facilities are designed to bring neutron and gamma beams out of the reactor core and to permit small sample irradiations in the core. The fixed experimental facilities consist of a thermal column, two beam tubes, a through tube and a pneumatic transfer system (rabbit).

10.2 EXPERIMENTAL FACILITIES

10.2.1 Thermal Column

The thermal column, Figure 10.1, is a graphite filled housing extending from within 0.953 cm (0.375 in) of the back face of the core through the pool tank wall and the concrete shield. The core end of the housing is a 0.953 cm (0.375 in) thick aluminum sleeve that passes through an aluminum nozzle welded to the pool tank wall. The sleeve is bolted and gasketed to a flange, which connects the nozzle and the thermal column liner. The liner extends through the concrete shield and accommodates a steel-concrete shield plug at its outer end.

The graphite assembly, Figure 10.2, consists of 25.81 cm^2 (4 in^2) graphite stringers arranged to form a stepped column 1.52 m (5 ft) long. The section forward of the step is 0.959 m (37.75 in) long and 0.610 m (2 ft) wide in which the stringers are arranged in a 6 x 6 pattern. The outer section of the graphite column is 0.565 m (22.25 in) long and 0.813 m (32 in) wide and its stringers are arranged in an 8 x 8 pattern surrounded with 0.318 cm (0.125 in) thick boral. There are small slots and holes in the stringers to accommodate experimental samples in the region of high thermal neutron flux. Lead bricks surround the outer end of the thermal column graphite for shielding. The thermal column shield plug at the outer end of the thermal column liner is 1.041 m (41 in) long and 1.010 m (39.75 ft) on each edge. It consists of concrete covered on all sides with 1.27 cm (0.5 in) of carbon steel. On the core side, it is additionally covered with 0.318 cm (0.125 in) of boral. The plug rides within the liner on rollers and contains a smaller carbon steel-covered concrete access plug with 0.318 cm (0.125 in) of boral on its forward end. When the access plug is removed, four stringers are exposed and may be removed in sections of different lengths to form experimental holes of various sizes.

10.2.2 Beam Ports

A 15.24 cm (6 in) double-stepped beam tube, Figure 10.3, faces the center of each side of the core. The portion of each beam tube extending into the tank is made of aluminum. A bolted gasket seal is used between this sleeve and the pool-tank flange. A steel backup ring prevents warping of the aluminum. The outer portion of the beam-tube assembly is stepped twice to accommodate the two 0.787 m (31 in) shield plugs. These plugs, shown in Figure 10.4, are of aluminum-clad concrete machined to fit within the outer end of the beam tubes. The inner plug has a 0.635 cm (0.25 in) boral sheet on the core-facing end. The steps prevent radiation streaming.

10.2.3 Through Tube

The 15.24 cm (6 in) through tube, Figure 10.5, extends from one side of the tank to the other. The mechanical design of the through tube is similar to that of the beam tubes; the shield plugs for the through tubes are the same as those shown in Figure 10.4 for the beam tubes.

10.2.4 Pneumatic Transfer System

A pneumatic transfer system, rabbit, provides a rapid and convenient means of transferring small samples between the hot room located on the west balcony and the reactor core. The control system for the pneumatic transfer system is located in the control room and is operated under the supervision of the reactor operator when the reactor is critical. The driving force for this system is available pressurized CO_2. Thus, there is little likelihood of ^{41}Ar production. The transfer system consists of a pneumatic mechanism located in an exhaust hood on the west balcony, polyethylene tubing for transferring samples between the laboratory and core, and a terminus located in core position C-4. A cut away drawing of the terminus is drawn in Figure 10.6.

The controls for the rabbit are located on the control room auxiliary panel. The system can be operated in either manual or automatic timing mode.

10.2.5 Other Locations

In addition to the four aforementioned facilities, there are other locations where an experiment could be installed in the facility if necessary. Experiments could utilize the reactor grid plate or the reactor pool tank.

10.3 EXPERIMENT REVIEW

At the MUTR, an experiment is defined to be:

1. Any device or material that is exposed to significant amounts of radiation and is not a normal part of the reactor, or

2. Any operation that is designed to measure reactor characteristics.

Approved maintenance and surveillance procedures are not considered experiments. An experiment will fall into one of three categories:

1. Routine Experiments: Routine experiments are those which have been previously performed in the course of the reactor program.

2. Modified Routine Experiments: Modified routine experiments are those which have not been performed previously but are similar to routine experiments in that the hazards are neither greater nor significantly different than those for the corresponding routine experiments.

3. Special Experiments: Special experiments are those which are not routine or modified routine experiments.

Administrative controls are implemented depending on the experiment category. The duty senior reactor operator, without any additional approval necessary, can approve routine experiments. Modified routine experiments must be reviewed and approved, in writing, by the Reactor Director or his/her designated alternate. The Reactor Safety Committee (RSC) must review special experiments. The RSC and the Reactor Director, or the Director's designated alternate, must give written approval prior to the special experiment being performed. The review of any modified routine or special experiment will consider its effect on normal reactor operations. In addition, the review will evaluate possibility of experiment failure, and the consequences should a failure occur. Depending on the specific experiment, consequences could include physical integrity, reactivity effects, interaction with core components, and effects of chemical reactions.

Any experiment that requires modification of the reactor facility or interfaces with control and/or safety systems will be reviewed for 10 CFR Part 50.59 compliance.

All experiments are designed to prevent damage to the reactor and to prevent excessive release of radioactive material in the event of a failure. Reactivity limitations are: non-secured experiments must have a reactivity worth less than $1.00; the total reactivity worth of a single experiment must be less than $1.00, and the total reactivity worth of all experiments in the reactor must be less than $3.00. Any potentially harmful material (corrosive, explosive, highly reactive with water, etc) must be doubly encapsulated prior to insertion into the core.

Explosive materials in quantities greater than 25 mg TNT equivalent shall not be irradiated. Quantities less than 25 mg TNT equivalent can be irradiated, but, prior to irradiation, calculations must show that the pressure produced if detonation occurs is less than the failure pressure of the container.

The activity of any experimental material, with the exception of fuel material, which has the potential to off-gas, sublime, or produce aerosols under all reactor operating conditions (normal or accident) is limited such that, in the event that 100 % of the material is released, the airborne concentration would not exceed the limits specified in 10 CFR Part 20.

Fueled experiments are permissible, subject to the above conditions. In addition, the amount of iodine 131 through 135 produced in the experiment must be less than $1.85(10^8)$ Bq (5 millicuries).

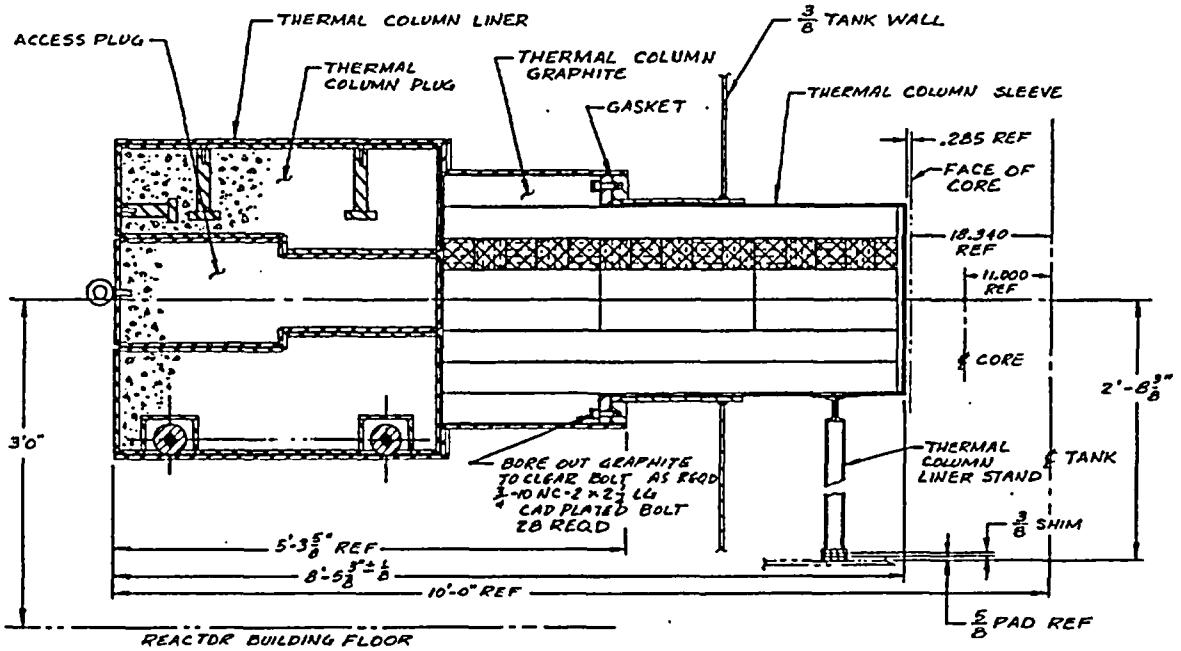

Figure 10.1: Thermal Column

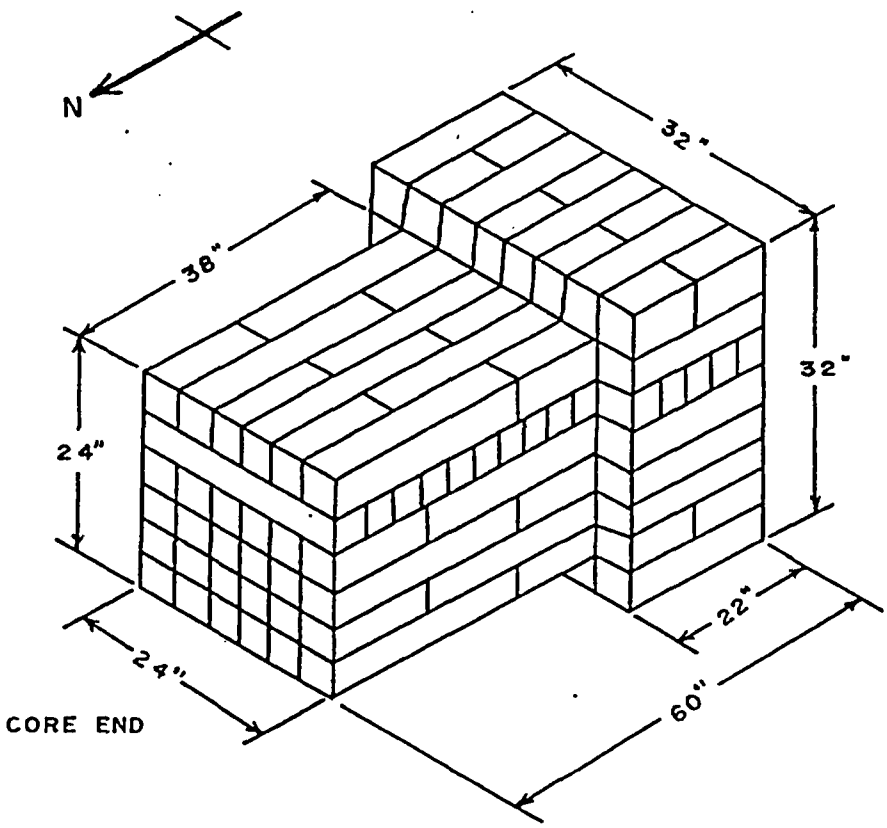

Figure 10.2: Thermal Column Graphite Plug

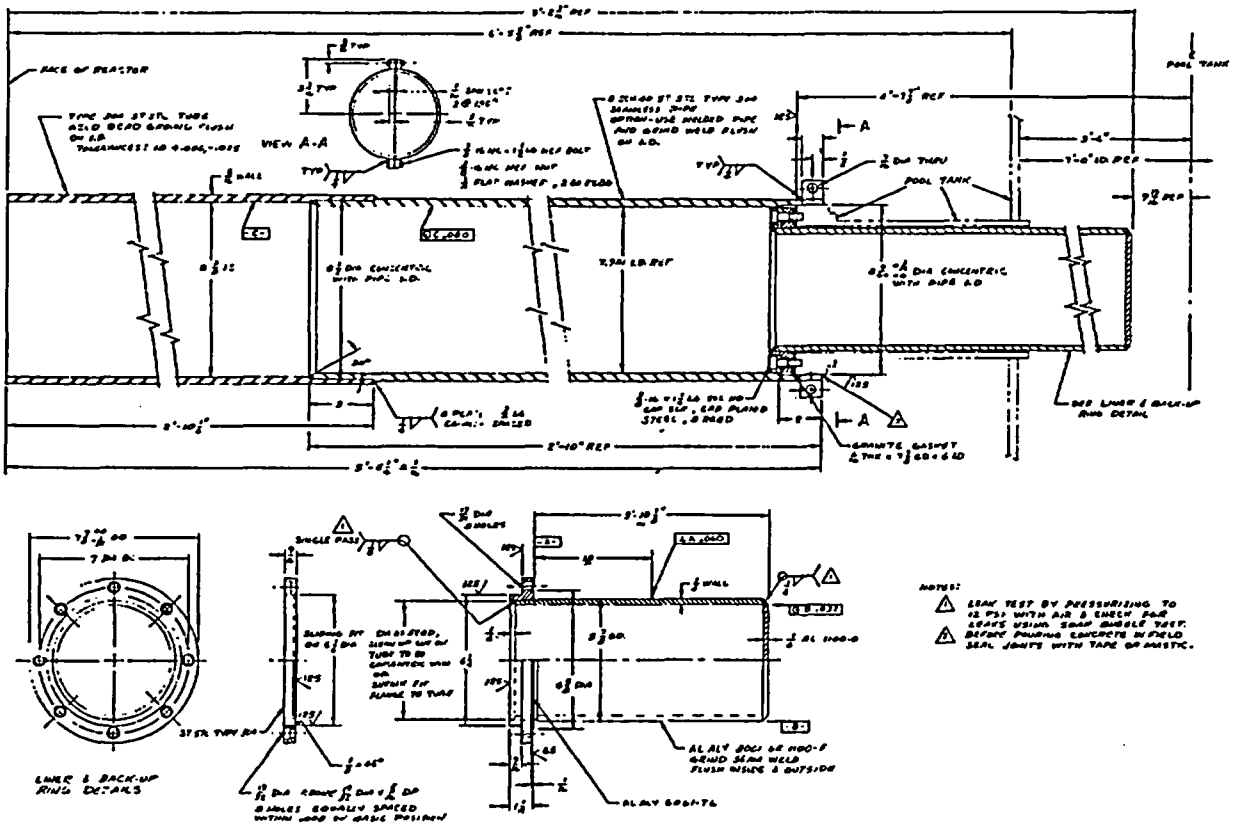

Figure 10.3: Beam Tube

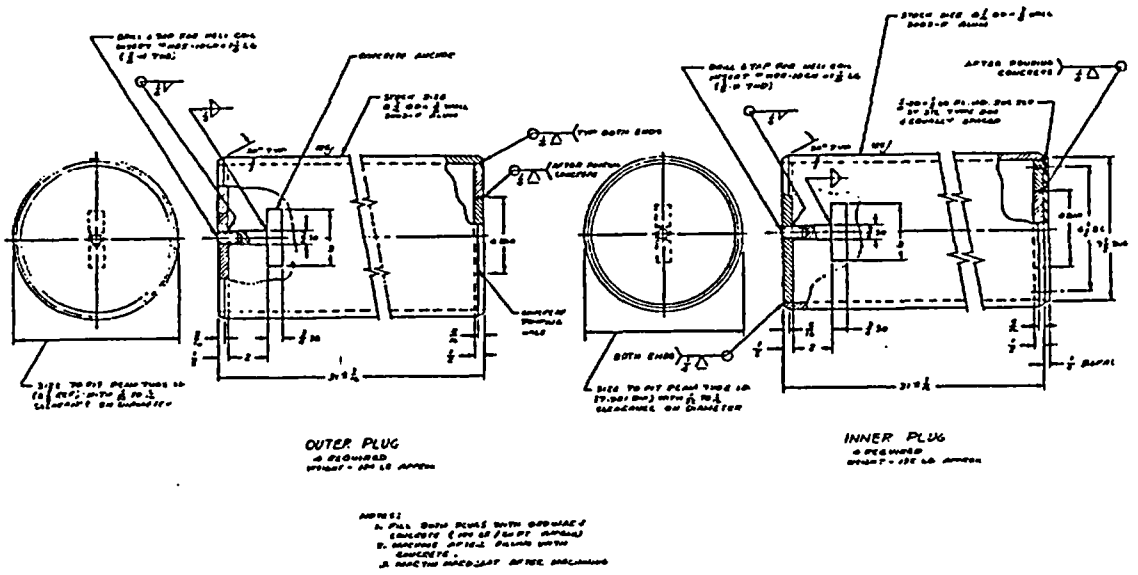

Figure 10.4: Beam Tube Plugs

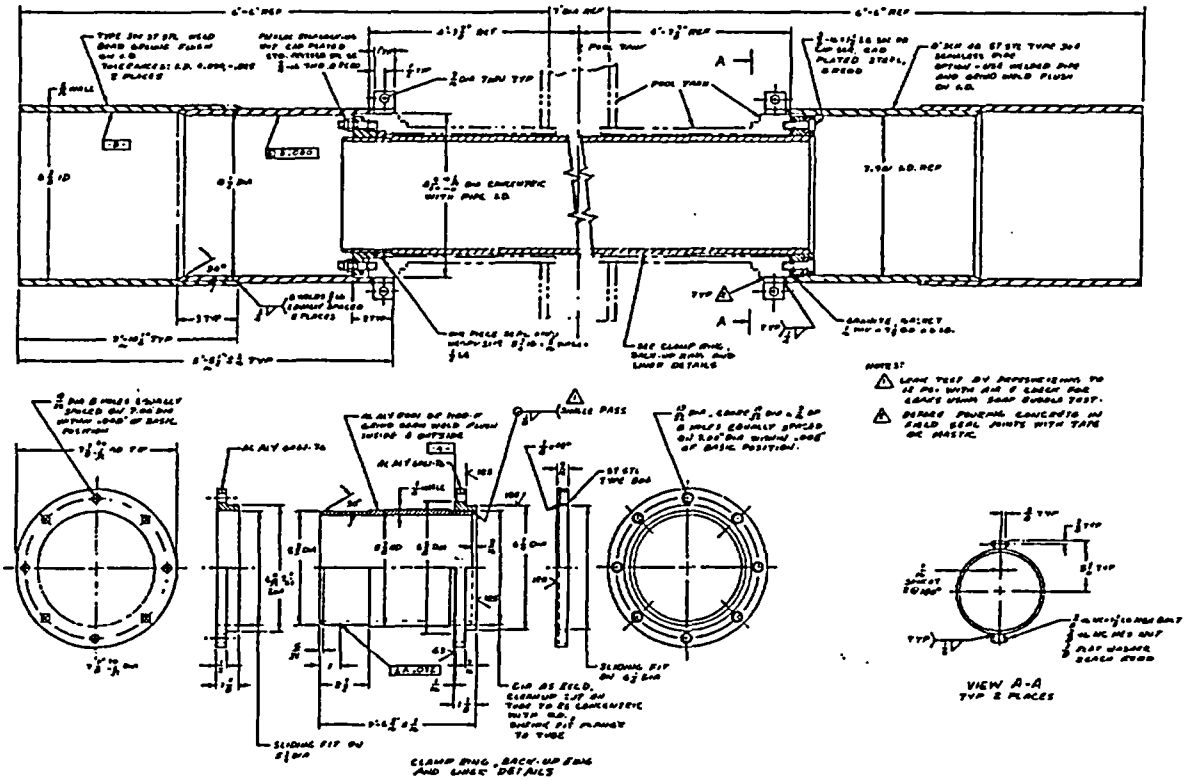

Figure 10.5: Through Tube

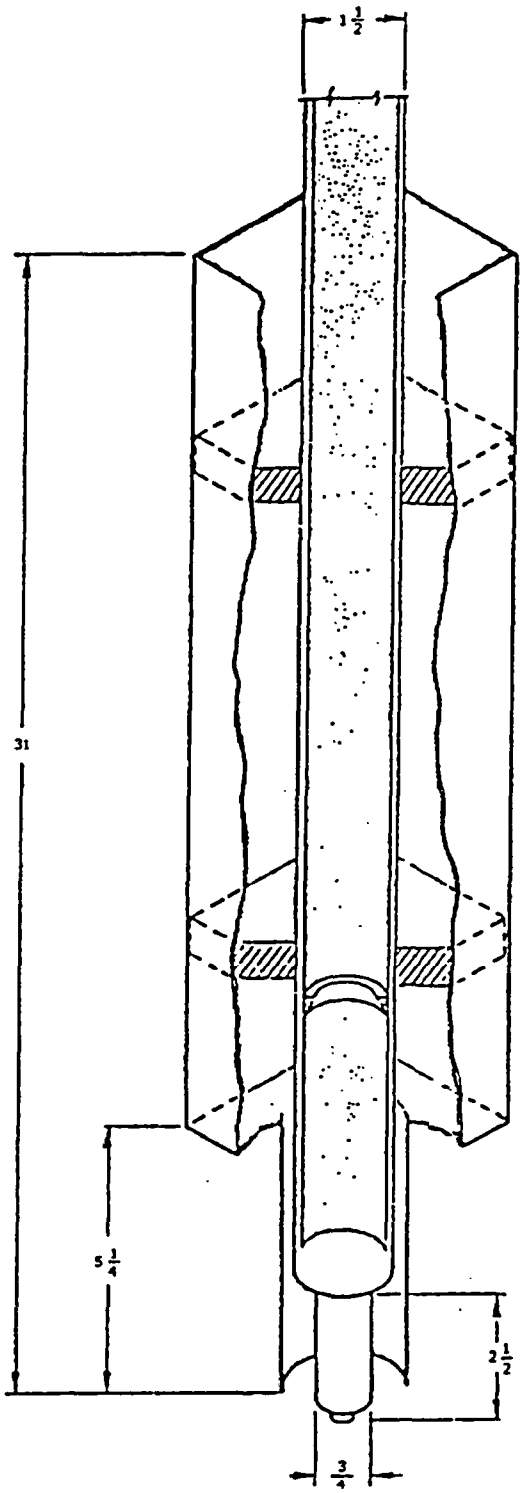

Figure 10.6: Pneumatic System Terminus

11.0 RADIATION PROTECTION PROGRAM AND WASTE MANAGEMENT

11.1 RADIATION PROTECTION

11.1.1 Radiation Sources

11.1.1.1 *Airborne Radiation Sources*

The primary source of airborne radiation under normal operating conditions is due to the neutron activation of air in the reactor pool tank and air filled experimental facilities and the production of ^{16}N in the pool tank. A possible secondary source of airborne radiation could result from off gassing or aerosolizing of an experiment undergoing irradiation. However, due to administrative constraints on experiments, the requirement to doubly encapsulate an experiment with a risk of off gassing or aerosolizing, the secondary source is likely to be very minor.

^{16}N is produced by the reaction ^{16}O (n,p) ^{16}N. Since ^{16}N has a 7.4 s half-life, at reactor power levels below the point of adding heat, approximately 1 kW, transport of ^{16}N to the surface of the pool tank occurs via diffusion. Diffusive transport through the 17.5 ft of water of the core results in decay of a majority of the ^{16}N. At higher power levels, the transport of ^{16}N to the top of the pool tank occurs by convective transport at speeds sufficient to bring the ^{16}N to the top of the pool tank before it decays. Once at the top of the pool, ^{16}N can exchange with atmospheric nitrogen, leave the water, and become airborne. Again, due to the short half-life ^{16}N released to the atmosphere will not travel far from the pool tank top before it decays. Therefore, ^{16}N is only a radiological hazard on the reactor bridge. The dose rate can be reduced by activation of the ^{16}N Diffuser described in section 5.6.

^{41}Ar, which is produced by neutron activation of air, is produced in the beam ports, the through tube, the air circulated through the neutron detector chambers and in the reactor pool tank water. The ^{41}Ar produced in the beam ports and through tubes is contained during normal operation by the tube plugs and a gasketted Plexiglas cover bolted over the plugged ports. The ^{41}Ar produced in the reactor pool water will exchange with the non-radioactive argon in the atmosphere of the reactor building by normal diffusive processes. It is estimated that during a typical operation year of 30 MWhr that the release of ^{41}Ar from the pool tank into the reactor building would be 100 mCi.

11.1.1.2 *Liquid Radioactive Sources*

The sources of liquid radioactive waste in the MUTR consist of fluids in the reactor sump, see Section 5.7, and any waste resulting from neutron activation of liquid experiments. Historically the sump has only contained water resulting from floor washing on the lower level of the reactor and water resulting from pool tank overflow, done primarily to skim dust off of the top of the pool tank. Before discharging the sump to the sanitary sewer system, a sample is analyzed by the Radiation Safety Office to determine compliance with the limits given in 10 CFR Part 20 Appendix B. Typically no nuclides are seen in the sump sample. Liquid wastes from experiments are rare in the MUTR, and disposal of such wastes is done in conjunction with the Radiation Safety Office either by dilution and release to the sanitary sewer or transfer of the waste to the Department of Environmental Safety's Environmental Service Facility for storage and disposal.

11.1.1.3 *Solid Radioactive Wastes*

Solid radioactive waste at the facility consists of spent fuel, neutron activated experiments, wastes from experiment handling (gloves, holders, lab bench covers, etc.), old check and calibration sources, and wastes from the primary coolant system (filters and ion exchange resin).

To date, no spent fuel has been discharged by the facility. The current burnup in any fuel element is less than 5 % of the initial ^{235}U loading. It is conceivable that a core change may be done during the next license period, in which case 93 fuel elements would be discharged. Disposal of this waste would be done in conjunction with the Department of Energy.

The remainder of the solid radioactive waste results in a net volume of 0.057 to 0.085 m^3/yr (2 to 3 ft^3/yr) of waste, which is primarily ion exchange resin. The activity of this waste is usually less than 100 mCi and contains primarily isotopes of cobalt, nickel, and iron. This waste is transferred to the Department of Environmental Safety for disposal.

11.1.2 Radiation Protection Program

This section will discuss the structure and implementation of the campus's radiation protection program. Figure 11.1 shows the structure of the campus radiation protection program and its relation to the MUTR. Individual elements of the program are discussed in the following subsections.

11.1.2.1 *President*

The President delegates authority in matters pertaining to campus radiation safety to the Office of the Vice President for Academic Affairs and Provost. This Office:

1. Assumes institutional responsibility through the Radiation Safety Officer (RSO) and the Radiation Safety Committee (RaSC) for general radiation safety practices and their administration.

2. Works with, Deans, Directors, and Department Chairpersons, through the Radiation Safety Committee and the Radiation Safety Officer in establishing a program that provides for the safety of all personnel associated with laboratories using radioactive materials or radiation producing devices and meets the State of Maryland licensing/registration requirements.

3. Appoints the RaSC and delegates appropriate authority to that body in matters pertaining to radiation safety.

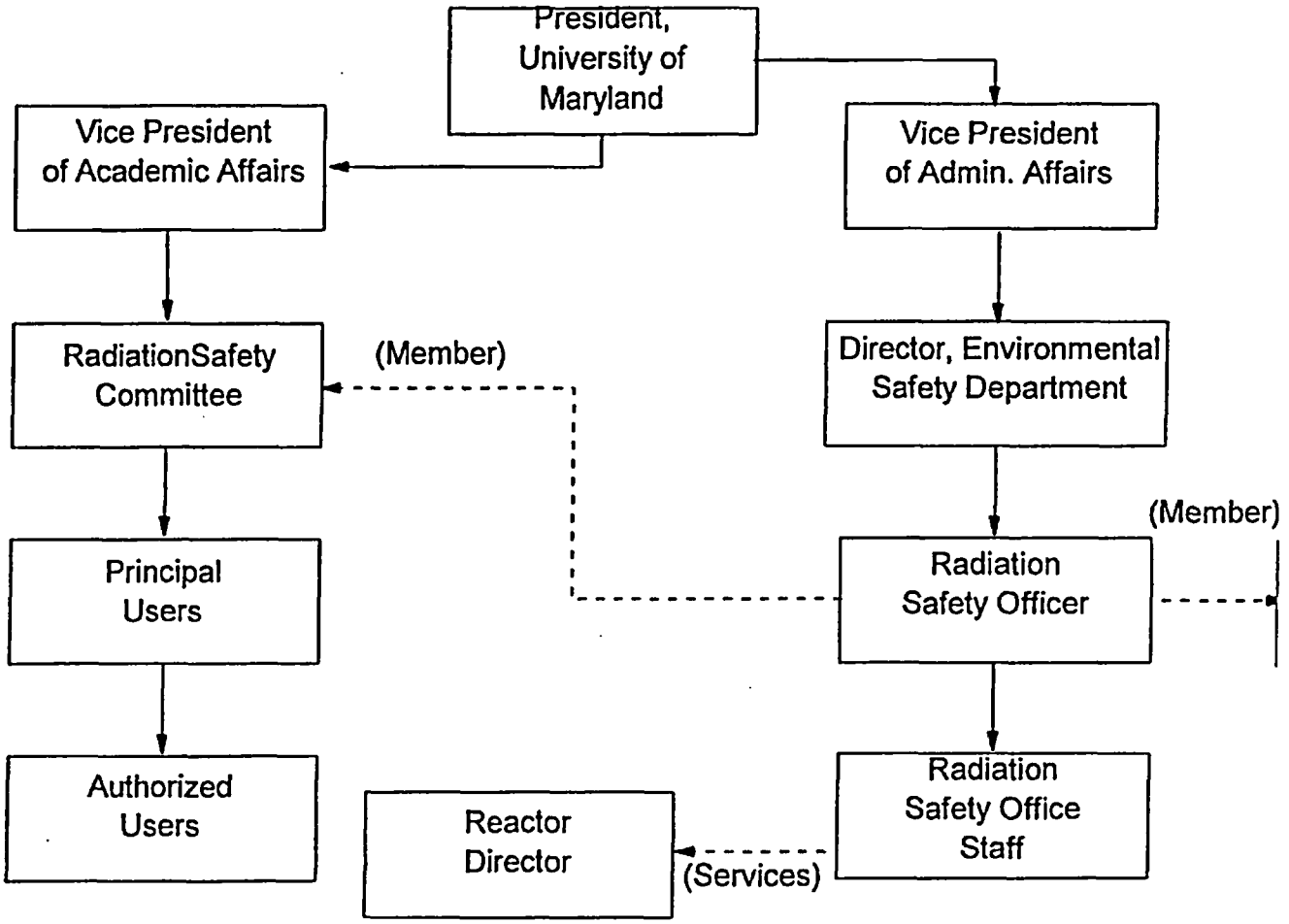

Figure 11.1: Campus Radiation Protection Program Organization

11.1.2.2 *Radiation Safety Committee*

The RaSC, which meets at least three times a year, is comprised of the Radiation Safety Officer, a representative of the Office of the Vice President for Academic Affairs and Provost, and faculty and staff trained and experienced in the safe use of radioactive materials and radiation producing devices.

This Committee is responsible for establishing procedures and policies for the authorized procurement, protection, use, and disposal of radioactive materials and radiation producing devices; for the safety and protection of all personnel, on the University of Maryland, College Park Campus and all properties under its control, involved in any projects in which ionizing radiation is used. The Committee shall:

1. Provide technical and administrative guidance and aid in the interpretation of various regulations governing the use of sources of ionizing radiation.

2. Review and act upon all new, renewal applications and amendment requests for possession and use of radioactive materials and registration of radiation producing devices.

3. Determine the adequacy of training and experience of persons requesting permission to use or supervise the use of radioactive materials and radiation producing devices.

4. Determine the suitability of space, facilities, or equipment designated for use or storage of radioactive materials and the use of radiation producing equipment.

5. Receive and review periodic reports from the RSO on monitoring, contamination, and personnel exposure.

6. Meet, at the call of the Chairperson, or designated representative, to review alleged infractions of safety rules and regulations, incidents and emergencies concerning any radiation program or project on the UMCP.

11.1.2.3 *Deans, Directors, and Department Chair Persons*

Deans, Directors, and Department Chairpersons are responsible, within their areas of concern, for the following administrative functions:

1. Promote the safety policies of the Office of the Vice President for Academic Affairs and Provost as formulated by the RSC, State of Maryland and/or Federal agencies.

2. Hold faculty members or supervisors responsible for the implementation and enforcement of applicable safety procedures and safety requirements.

3. Authorize necessary expenditures for safety.

11.1.2.4 *Radiation Safety Office*

The RSO functions under the Director of Environmental Safety, and Radiation Safety Officer, and serves as the Staff for the RSC. The RSO is responsible for:

1. Advising the Director of Environmental Safety and the Office of the Vice President for Academic Affairs and Provost on the control of radiation hazards.

2. Directing all radiation safety activities on the UMCP Campus and satellite facilities.

3. Controlling all radioactive material and radiation producing devices.

4. Acting as executive agent for all State of Maryland licenses for the possession, use, storage, and disposal of radioactive material and radiation producing devices on the UMCP Campus and satellite facilities.

5. Providing advice, assistance, technical support, and supervision to all activities using radioactive material or radiation producing devices on matters of radiation safety.

6. Conducting and administering education and training programs in the safe use of radioactive materials, sources, and radiation producing devices.

7. General surveillance of all radiation safety activities, including both personnel and environmental monitoring.

8. Ordering (or authorize ordering), receiving, processing, and shipping all radioactive materials coming to or leaving the University of Maryland Campus and satellite facilities.

9. Ensuring calibration of all portable survey instruments in a timely manner.

10. Collecting, distributing and processing of personnel monitoring devices; keeping of records of internal and external exposure to personnel; notifying individuals and their Principal Users of unusual exposures or when approaching maximum permissible amounts of exposure, and assisting all personnel in keeping future exposure as low as reasonably achievable (ALARA).

11. Maintaining an around-the-clock emergency response for emergencies and incidents involving radiation, radioactive material, or personnel exposure.

11.1.2.5 *Principal User*

The principal user is the person to whom the authorization is issued. This person is responsible for the particular program stated in the Authorization for Possession and Use of Radioactive Materials or Possession and Use of Radiation Producing Devices. The principal user's responsibilities are:

1. Planning and organizing an experiment or program keeping in mind the type and amount of radiation or radioactive material to be used and/or produced.

2. Providing for necessary engineering controls for the safe use of RAM by obtaining necessary funding, specifying equipment, and assuring that all equipment is installed and functioning properly.

3. Instructing those personnel who work under their authorization, in the safe use of radioactive materials or radiation producing devices.

4. Furnishing the RSO with information concerning individuals and activities in their areas; particularly, pertinent changes in personnel and procedures.

5. Contacting the RSO whenever major changes in operational procedures, rooms, alterations of facilities (e.g., shielding changes, removal or installation of radioactive material handling equipment) occur or when new operations, which might lead to personnel exposure, are anticipated.

6. Ensuring compliance with all regulations governing the use of radioactive materials or radiation producing devices as established by the RaSC, NRC, and the State of Maryland.

7. Equipping each laboratory complex with survey meters capable of detecting the types of radiation that might be encountered in the area as directed by the RaSC. Ensure that the survey meters are functional and in current calibration. Deliver the instrument to the RSO if in need of repair.

8. Posting all areas under their control with proper radiation warning signs.

9. Ensuring that the personnel under their control discharge their individual responsibilities.

11.1.3 ALARA Program

The UMCP ALARA Program is a formal program which encompasses the concept of "as low as reasonably achievable" to reduce personnel exposure while working with radioactive materials and radiation producing equipment. The UMCP Administration, the RaSC, and the RSO embrace this program.

The major components of this program are:

1. Radiation Safety Manual (RSM) and Supplement
2. DES/RSO Administrative Procedures
3. US NRC Regulations – 10 CFR Part 20
4. MUTR Technical Specifications
5. MUTR Emergency Procedures
6. User Authorizations – RSM, Supplement, and Procedures
7. Radioactive Materials – RSM, Inventories, Authorizations, Ordering and Receipt
8. Sealed Sources – RSM, Inventories COMAR 26.12.01.01 (Code of Maryland)
9. Radiation Producing Equipment – RSM, Supplement, Registration Certification, COMAR 26.12.01.02
10. Radiation Exposure – 10 CFR Part 20, RSM, COMAR 26.12.01.01, Investigations (ALARA.002 and 0.013)
11. Monitoring Equipment – RSM, COMAR 26.12.01.01, Calibration Services
12. Planned Special Exposure – RSM, Memo for Record

The RSM gives the requirements for use of radioactive materials. The supplement gives the requirements for use of radiation producing equipment. 10 CFR Part 20 and the MUTR Technical Specifications are the controlling regulation for MUTR operations.

In the user authorization area, the safeguards of laboratories are inspected and investigated; the user training and experience is documented; the proper monitoring equipment is ensured; any engineering requirements are investigated, i.e., shielding, security, hood requirements; physical layout of the lab is checked and the lab surveyed; personnel monitoring is identified and issue of monitoring devices is documented.

The material inventory requirements are documented and security requirements delineated.

An inventory and inspection program and subsequent State Certification is in place for all radiation producing devices.

Trend analysis will be performed on a periodic basis of the radiological doses of the University Community.

The RaSC and UMCP Administration will perform an audit of the UMCP Radiation Protection Program on a periodic basis. This audit examines the effectiveness of the radiation protection staff, work monitoring, procedural compliance, and survey adequacy. Audits are performed annually with alternating years being an internal audit performed by the RSO and staff and an external audit by RaSC designated auditors.

To ensure non-contamination of personnel, sealed sources are smeared on a schedule (semi-annually) and documented; Radiation Safety Personnel check security requirements of sources.

An investigation program is in place to document when, how, and why a person may have received exposure above those deemed appropriate for the involved research, and/or for exposures above the UMCP specified action levels.

The Radiation Safety Officer will authorize any "Planned Special Exposure", after consultation and concurrence with the Radiation Safety Committee and/or the Reactor Safety Committee.

11.1.4 Radiation Monitoring and Surveying

The MUTR uses a combination of personnel monitoring, remote area monitoring, portable monitors, periodic air and water sampling, and environmental monitors to routinely monitor the facility.

All personnel who enter the radiologically controlled areas of the MUTR are issued dosimeters. Personnel with infrequent access (e.g. tour groups) are issued SRPD's that have been calibrated as part of the overall Radiation Safety Office detector calibration service. Records of personnel using the SRPD's are maintained by the facility. The Radiation Safety Office, as part of the overall campus personal monitoring contract with an external, accredited firm, issues personnel with needs for regular access to the facility a dosimeter.

Fixed dosimeters are located throughout the facility in both non-radiologically controlled areas, near the experimental ports, and at locations were personnel normally work and where radioactive materials are stored. These dosimeters are evaluated as part of the campus's personnel dosimetry contract.

The facility possesses two remote area monitors. These monitors are located at the entrance to the reactor bridge and at the south exhaust fan. Both monitors are capable of sending scram signals to the reactor as well as secure the ventilation system in the event of a high reading. These functions are discussed in greater detail in Sections 6 and 7.

For personnel who are handling radioactive material or are utilizing one of the excore irradiation facilities, a variety of portable instrumentation is available for use. The Radiation Safety Office maintains calibrations for these instruments.

11.1.5 Radiation Exposure Control and Dosimetry

11.1.5.1 *Prevention of Releases*

Prevention of the unauthorized release of radioactive materials from the facility is accomplished via three items.

1. The Reactor Ventilation System which secures automatically in the event that high levels of radiation are detected in the facility, see Section 6.

2. The Reactor Sump that contains all (potentially) contaminated liquid effluent from the facility and requires a deliberate action to discharge into the sanitary sewer system.

3. Storage of solid, (potentially) contaminated items in marked containers or locations that are distinct and separate from those used for uncontaminated solid waste destined for municipal waste facilities.

11.1.5.2 *Establishment and Control of High Radiation Areas*

In general high radiation areas are not present in the facility. During certain experiments though a high radiation area could be created, for example operation with a beam tube or through tube bypassed. In such a case the area would be posted with signage as required in 10 CFR Part 20. Furthermore, the high radiation area would either have temporary access restrictions in place to prevent personnel from entering the area, or, as per 10 CFR Part 20.1601 (c), video or direct surveillance of the area by a member of the reactor staff would occur. High radiation areas can only be established with the approval of a Senior Reactor Operator. Operation of the facility with an open experimental port can only occur with the approval of the Reactor Director.

11.1.5.3 *Expected Exposures and Dosimetry*

Annual exposures expected in the facility are shown in Table 11.1. These exposures are derived from historical data obtained by the fixed monitors. Note that the pump room levels primarily result from the storage of spare PuBe startup sources in the pump room. Furthermore, note that none of these locations experienced exposures that could have resulted in a staff member receiving a dose in excess of 10 CFR Part 20 limits.

Personnel dosimetry for MUTR staff members takes the form of personnel dosimeters, which are issued by the Radiation Safety Office. The dosimeters are provided for and evaluated by an accredited off-campus firm. These dosimeters are collected on a fixed periodic schedule. The Radiation Safety Office maintains records of personnel exposures for the campus. In a typical operation year the average staff member does not exceed 20 mrem whole body dose. If needed, the Radiation Safety Office can issue ring and/or wrist dosimeters.

Visitors are issued temporary dosimeters after a brief orientation lecture on facility hazards. The Radiation Safety Office calibrates these dosimeters. A record of visitors and visitor exposures is maintained by the facility as part of its normal log keeping.

Exposure limits for staff and visitors adhere to both campus policies and 10 CFR Part 20.

Table 11.1: Typical Annual Exposures at Various Facility Locations

Location	Exposure (mrem)	Location	Exposure (mrem)
Control Room	20	Thermal Column Area	10
Pool Surface	100	East Beam Area	50
Hot Room	1000	Pump Room	1000
Conference Room	50	Lower North Wall	10
Upper South Wall	10	West Beam Area	10

11.1.6 Contamination Control

Contamination control at the MUTR is achieved primarily by 3 philosophies of operation:

1. Use of radioactive materials is restricted to certain regions of the facility that include the hot room, the reactor bridge, and the lower level of the reactor building. This greatly reduces areas of the facility that could by contaminated as a result of an experiment or maintenance activity.

2. All personnel who handle radioactive materials that are not sealed sources are required to wear latex, or equivalent, gloves.

3. All potentially contaminated materials resulting from reactor operations or maintenance activities will be stored in marked drums in the facility or in storage containers in the hot room.

11.1.7 Environmental Monitoring

Under normal operating conditions, the MUTR has no negative impact on its environs. There are three basic pathways by which radioactive material could leave the facility and enter the environment. These are by air through the exhaust vents and facility doors, by water through the reactor sump into the local sewer system, and via transfer of solid materials outside the facility.

Since the sump may not be dumped without RSO surveying its contents, records of any releases from the sump are maintained as part of the surveying process.

Campus has a well-established program for the removal of hazardous and radioactive waste from campus laboratories and facilities. The MUTR makes use of the existing campus infrastructure for disposing of hazardous and/or radioactive solid and liquid wastes. This existing program will be discussed in further detail in Section 11.2.

Environmental monitoring of airborne releases is performed as part of the routine surveillance program for the MUTR. Each month a water sample from the reactor pool and an air sample from the reactor building are collected with the MUTR operating if possible. The samples are then analyzed by RSO.

11.2 RADIOACTIVE WASTE MANAGEMENT

Management of the MUTR's radioactive waste is responsibility shared by both the facility staff and the Department of Environmental Safety. The staff is responsible for the handling and packaging of waste internal to the facility. The Department of Environmental Safety assumes responsibility for the facility waste when it leaves the facility for disposal.

11.2.1 Radioactive Waste Management Program

The disposal of radioactive waste is the responsibility of the Department of Environmental Safety's Hazardous Waste Operations. This subset of DES maintains a storage area on campus where waste is segregated into various forms and packaged for appropriate disposal.

The first step in the campus's program is for each individual lab to properly segregate and identify by isotope, chemical compound, and activity all wastes leaving a lab for disposal by DES. Wastes must be segregated at the lab into the following categories:

1. Dry Solid LLRW: Such as gloves, paper, cardboard or other similar materials. Not to include needles, syringes or other sharps.

2. Sharps: Such as contaminated needles and syringes are to be segregated into approved "sharps" containers.

3. Biological materials including animal wastes and bedding are to be segregated into approved biohazard containers.

4. Aqueous wastes: Water plus non-hazardous, inorganic chemicals and isotopes will have their pH adjusted to 6.0 to 10.0 prior to disposal.

5. Mixed LLRW: Mixtures of organic chemicals, isotopes, and other hazardous or non-hazardous materials.

6. Sealed and unsealed commercial sources.

7. Scintillation cocktails, solutions, and vials.

In addition to the type segregation, wastes must also be segregated at the lab by isotope such that ^{32}P is kept separate, ^{35}S is kept separate, ^{14}C and ^{3}H combined are kept separate, and other isotopes are kept separate from the aforementioned.

DES will not accept any waste from labs which is not appropriately packaged, segregated, identified, and accompanied by a valid, written request for waste pickup.

11.2.2 Radioactive Waste Control

Under normal operating conditions little radioactive waste is produced by the MUTR. As discussed in other sections the primary gaseous effluent is ^{41}Ar from the reactor pool tank. In the event of abnormal operations the reactor ventilation system will automatically secure to reduce the release of waste from the facility. Liquid wastes are collected in the reactor sump where they are analyzed before any release is allowed. Both liquid waste dilution and holdup for decay are possible with the sump systems as described in Section 5.7. Solid waste is segregated into marked containers for disposal according to the campus waste management program described in Section 11.2.1.

11.2.3 Release of Radioactive Waste

Radioactive material in the MUTR is disposed of in one of three manners. Short-lived radioactive waste of known isotopic composition can be stored until it decays. Liquid waste in the reactor sump is disposed of by dumping into the sanitary sewer system. The release point is located in the reactor pump room and details on the system can be found in Section 5.7. Any liquid waste disposed of in this manner must have a sample analyzed by RSO prior to dumping to ensure compliance with 10 CFR Part 20. Lastly, waste can also be disposed of by transferring the waste material to the Department of Environmental Safety, which maintains a program for disposing of hazardous and radioactive materials for the campus at large.

12.0 CONDUCT OF OPERATIONS

12.1 ORGANIZATION

12.1.1 Structure

The organizational structure of the MUTR is shown in Figures 12.1 and 12.2. Figure 12.1 shows the position of the MUTR within the campus's administrative structure along with those campus entities tasked with support of the MUTR. Figure 12.2 shows the facility staff structure for the MUTR.

12.1.2 Responsibility

The Department of Materials and Nuclear Engineering of the A. James Clark School of Engineering has the responsibility for the MUTR. This department has the responsibility for supervision and operation of laboratories and experimental facilities as well as an educational program leading to the degrees of Bachelor of Science, Master of Science, and Doctor of Philosophy in Nuclear Engineering.

Direct responsibility for the operation and maintenance of the reactor rests with the Reactor Director. He is responsible for maintaining established operation schedules, operator training and supervision, adherence to established safety policies by all personnel in the Reactor Building, and other normal functions of operations. The Reactor Director is appointed by and reports directly to the Chairperson of the Materials and Nuclear Engineering Department.

The reactor operators and technicians under the supervision of the Reactor Director will do routine operation and maintenance. Reactor Operators will have been trained specifically for this purpose and must hold a NRC issued SRO or RO license for the MUTR. The manipulation of the reactor controls will be done only by or under the supervision of a person holding an NRC operator's license.

The members of the organization chart shown in Figure 12.2 shall be responsible for safeguarding the public and facility personnel from undue radiation exposure and for adhering to all requirements of the operating license.

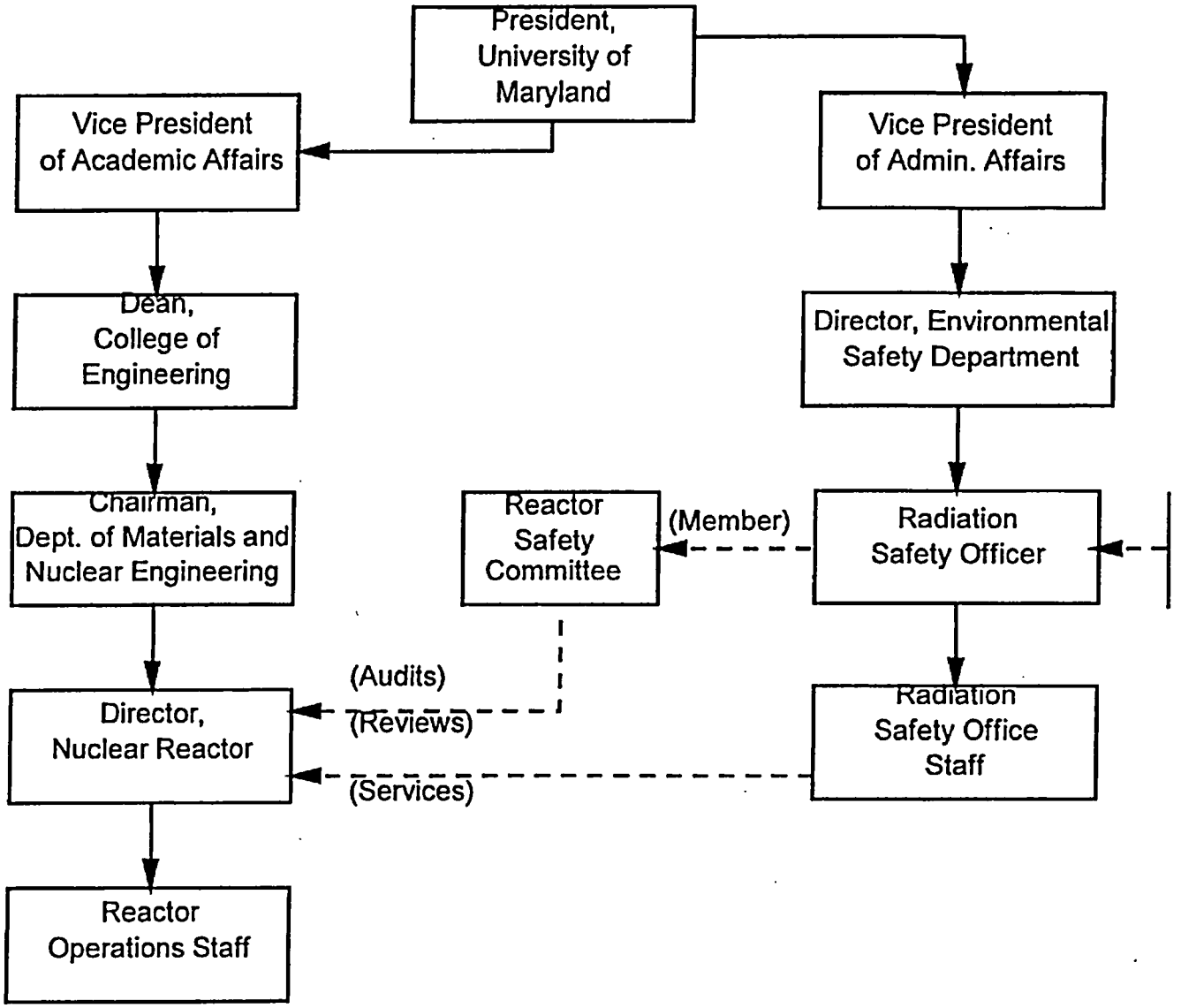

Figure 12.1: MUTR Administrative Structure

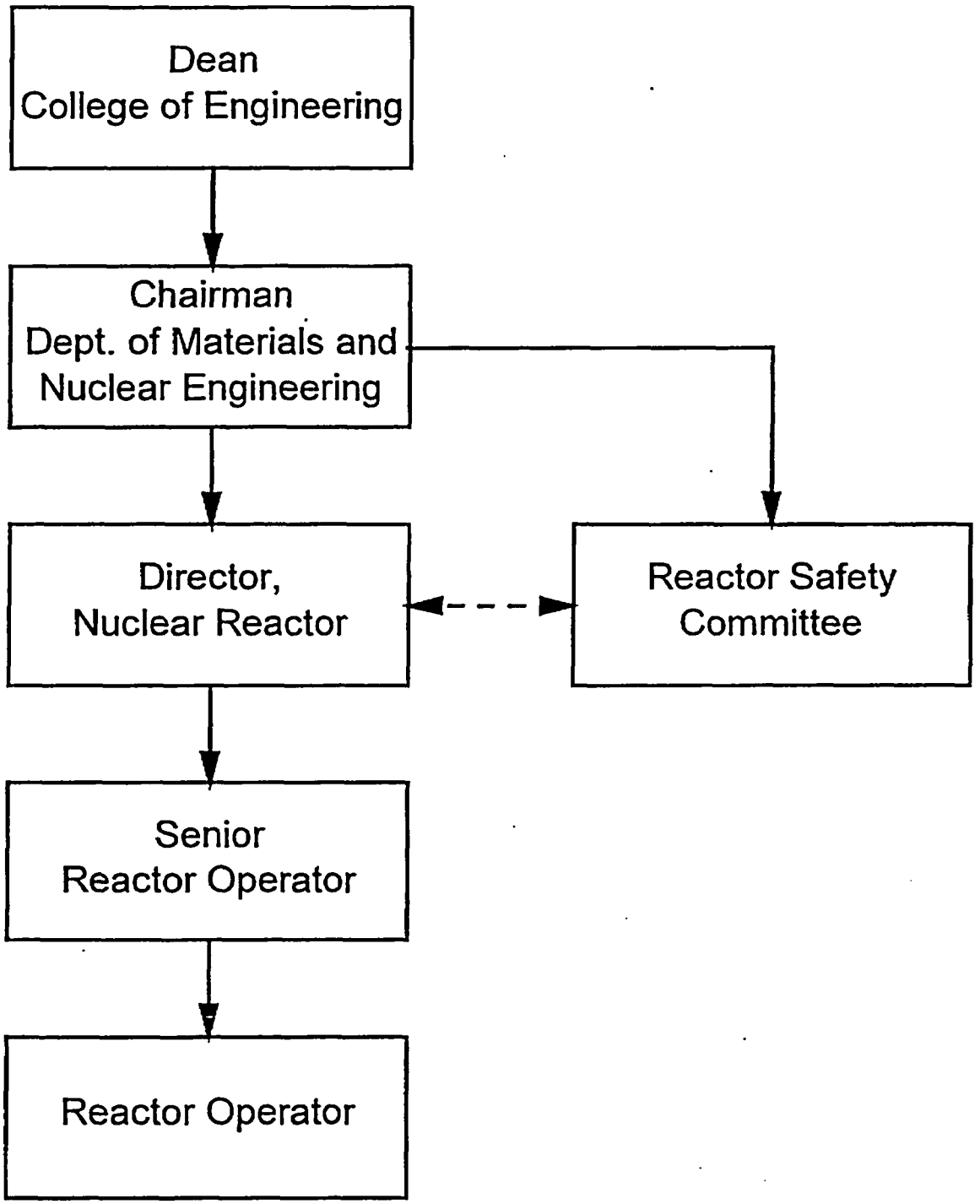

Figure 12.2: MUTR Staff Structure

12.1.3 Staffing

While the reactor is in not secured the minimum staffing for the facility shall include::

1. A licensed reactor operator (RO) or a licensed senior reactor operator (SRO) shall be present in the control room whenever the reactor is operating.

2. A minimum of two persons must be present in the facility or in the Materials and Nuclear Engineering Building when the reactor is operating: the operator in the control room and a second person who can be reached from the control room who is able to carry out prescribed written instructions which may involve activating elements of the Emergency Plan.

3. A licensed SRO must be present or readily available on call.

4. A list of reactor facility personnel by name and telephone number shall be readily available in the control room for use by the operator. The list shall include management personnel, radiation safety personnel, and licensed operators.

A SRO must be present for the following operations:

1. Initial startup and approach to power following new fuel loading or fuel rearrangement.

2. When experiments are being manipulated in the core that have an estimated worth greater than $0.80.

3. Removal of control rods or fuel manipulations in the core.

4. Resumption of operation following an unscheduled shutdown. (This requirement is waived if the shutdown is initiated by an interruption of electrical power to the plant.)

12.1.4 Selection and Training of Personnel

12.1.4.1 *Reactor Director*

The minimum qualifications for the reactor director are:

1. A minimum of six years of nuclear experience is required along with a recognized baccalaureate or higher degree in an engineering or scientific field. Education or experience that is job related may be substituted on a case-by case basis. Four of the six years of experience may be fulfilled by education on a one-for-one time basis.

2. A candidate for director must have at least one year of experience in personnel and environmental radiation monitoring programs with demonstrated proficiency in sampling and analysis procedures. This experience may have been obtained concurrently with (1).

3. The director must be licensed as a SRO on the MUTR. The temporary appointment as Acting Reactor Director may be made without item 3 provided that a licensed SRO remains available for immediate control of the reactor operation as required in 10 CFR Part 50.54.

12.1.4.2 *Senior Reactor Operator*

Qualifications to become a Senior Reactor Operator are:

1. A minimum of two years of reactor operations experience as an RO for the MUTR or another nuclear reactor. Significant experience or education in nuclear engineering and the related sciences may be substituted with the approval of the Reactor Director. If the individual desiring to become an SRO is the Reactor Director, than approval for the waiving of operations experience must be given by the Reactor Safety Committee.

2. The individual shall have received sufficient training to meet the requirements of 10 CFR Part 55 for obtaining a SRO license.

3. The individual, at a minimum, shall have a high school diploma or GED. Additional academic training is desirable.

12.1.4.3 *Reactor Operator*

Qualifications to become a Reactor Operator are:

1. The individual shall have received sufficient training to meet the requirements of 10 CFR Part 55 for obtaining a RO license.

2. The individual, at a minimum, shall have a high school diploma or GED. Additional academic training is desirable.

12.1.4.4 *Reactor Technician*

Any reactor technician shall possess the skills through experience or training for the given maintenance task.

12.1.5 Radiation Safety

Radiation safety and radiation protection services for the MUTR are provided by the University's Radiation Safety Office. The Radiation Safety Office is part of the campus's Department of Environmental Safety which in turn is part of the Office of the Vice President for Administrative Affairs (for reference, the MUTR falls under the Office of the Vice President for Academic Affairs).

The Radiation Safety Officer has authority to bring concerns directly to the Reactor Director, the Radiation Safety Committee Chairperson, or the Director of Environmental Safety. In the event that the RSO determines that current operations pose an immediate and significant threat to the health and safety of the public and facility staff, the RSO may suspend facility operations and facility use of radioactive materials and call for a meeting of the Reactor Safety Committee. Any such request must be given in writing with supporting documentation to the Reactor Director with copies to the Chairperson's of the Materials and Nuclear Engineering Department and the Reactor Safety Committee.

12.2 REVIEWS AND AUDITS

12.2.1 Composition and Qualifications

A Reactor Safety Committee (RSC) shall exist for the purpose of reviewing matters relating to the health and safety of the public and facility staff and the safe operation of the facility. It is appointed by and reports to the Chairperson of the Materials and Nuclear Engineering Department. The RSC shall consist of a minimum of five persons with expertise in the physical sciences and preferably some nuclear experience. Permanent members of the committee are the Facility Director and the Campus Radiation Safety Officer (RSO) or that office's designated alternate, neither may serve as the committee's chairperson. Qualified alternates may serve on the committee. Alternates may be appointed by the Chairperson of the RSC to serve on a temporary basis. At least one committee member must be from outside the Department of Materials and Nuclear Engineering.

12.2.2 Charter and Rules

The reactor safety committee will meet a minimum of twice per year. The Committee Chairperson or the Department Chairperson may call additional meetings as necessary. Reactor staff members and the RSO shall have the right to request a committee meeting to discuss issues relating to the health and safety of the public and facility staff and the safe operation of the facility.

A quorum of three members and the RSO or designated alternate is required for committee business to occur. At no point may the reactor staff constitute the majority of members present for a vote. Furthermore, no more than two alternates may be used for a voting quorum.

The Committee Chairperson shall distribute minutes of all Reactor Safety Committee meetings to all committee members. Minutes shall also be distributed to the Chairperson of the Materials and Nuclear Engineering Department and the MUTR files.

12.2.3 Review Function

The RSC shall review the following:

1. Experiments referred to it by the Facility Director because of the degree of hazard involved or the unusual nature of the experiment.

2. Reportable occurrences (see Section 6.6).

3. Violations of technical specifications or license.

4. Proposed changes to the facility license, Emergency Plan, Technical Specifications, and experiments or changes made pursuant to 10 CFR Part 50.59.

5. Operating procedures.

6. Audit reports and inspection reports.

7. Operating abnormalities having safety significance.

8. Results of emergency drills.

12.2.4 Audit Function

An annual audit and review of the reactor operations will be performed by an outside individual or group familiar with research reactor operations. The audit performer shall submit a report to the Facility Director and the Reactor Safety Committee.

During the audit the following items shall be reviewed:

1. Reactor operators and operational records for compliance with internal rules, procedures, and regulations, and with license provisions.

2. Existing operating procedures for adequacy and accuracy.

3. Plant equipment performance and its surveillance requirements.

4. Records of releases of radioactive effluents to the environment.

5. Operator training and requalification.

In addition to the above external audit, the Facility Director or his designated alternate shall conduct an audit of the reactor facility ALARA Program at least once per calendar year (not to exceed fifteen months). The results of the audit shall be presented to the RSC at the next scheduled meeting. This audit may occur as part of a review of the overall campus ALARA program.

12.3 PROCEDURES

Written procedures, reviewed and approved by the Reactor Safety Committee, shall be in effect and followed for the following items prior to performance of the activity. The procedures shall be adequate to assure the safety of the reactor, but should not preclude the use of independent judgment and action should the situation require such:

1. Start-up, operation, and shutdown of the reactor.

2. Installation or removal of fuel elements, control rods, experiments, and experimental facilities.

3. Maintenance procedures that could have an effect on reactor safety.

4. Periodic surveillance of reactor instrumentation and safety systems and area monitors as required by these Technical Specifications.

Substantive changes to the above procedures may be made with the approval of the Facility Director. All such temporary changes to procedures shall be documented and subsequently reviewed by the Reactor Safety Committee. If required, a 10 CFR Part 50.59 review of a procedure change will be performed.

12.4 REQUIRED ACTIONS

12.4.1 Actions To Be Taken In Case Of Safety Limit Violation

In the event a safety limit is exceeded:

1. The reactor shall be shut down and reactor operation shall not be resumed until authorized by the NRC.

2. An immediate report of the occurrence shall be made to the Chairman, Reactor Safety Committee, and reports shall be made to the NRC in accordance with Section 6.7.2 of these specifications, and

3. A report shall be prepared which shall include an analysis of the cause and extent of possible resultant damage, efficacy of corrective action, and recommendations for measures to prevent or reduce the probability of recurrence. This report shall be submitted to the Reactor Safety Committee for review and then submitted to the NRC when authorization is sought to resume operation of the reactor.

12.4.2 Actions To Be Taken In The Event Of A Reportable Occurrence

A reportable occurrence is any of the following, which occurs during reactor operation:

1. Operation with actual safety-system settings for required systems less conservative than the Limiting Safety-System Settings specified in the Technical Specifications.

2. Operation in violation of the Limiting Conditions for Operation established in the technical specifications.

3. A reactor safety system component malfunction which renders or could render the reactor safety system incapable of performing its intended safety function unless the malfunction or condition is discovered during maintenance tests or periods of reactor shutdowns. (Note: Where components or systems are provided in addition to those required by the Technical Specifications, the failure of the extra components or systems is not considered reportable provided that the minimum number of components or systems specified or required perform their intended reactor safety function.).

4. An unanticipated or uncontrolled change in reactivity greater than one dollar.

5. Abnormal and significant degradation in reactor fuel, or cladding, or both, coolant boundary, or containment boundary (excluding minor leaks) where applicable which could result in exceeding prescribed radiation exposure limits of personnel or environment, or both.

6. An observed inadequacy in the implementation of administrative or procedural controls such that the inadequacy causes or could have caused the existence or development of an unsafe condition with regard to reactor operations.

In the event of a reportable occurrence, as defined above, the following actions will be taken:

1. Immediate action will be taken to correct the situation and to mitigate the consequences of the occurrence.

2. The reactor shall be shut down and reactor operation shall not be resumed until authorized by the Reactor Safety Committee.

3. The event shall be reported to the Reactor Director who will report to the NRC as required in section 12.5.2.

4. The Reactor Safety Committee will investigate the causes of the occurrence. The Reactor Safety Committee will report its findings to the NRC and Dean, College of Engineering. The report shall include an analysis of the causes of the occurrence, the effectiveness of corrective actions taken, and recommendations of measures to prevent or reduce the probability or consequences of recurrence.

12.5 REPORTS

12.5.1 Annual Operating Report

A report summarizing facility operations will be prepared annually for the reporting period ending June 30th. This report shall be submitted by September 30 of each year to the Director, Office of Nuclear Reactor Regulation, NRC, with a copy to the NRC Document Control Desk. The report shall include the following:

1. A brief narrative summary of results of surveillance tests and inspections required in the Technical Specifications.

2. A tabulation showing the energy generated in MW·hr for the year.

3. A list of unscheduled shutdowns including the reasons therefore and corrective action taken, if any.

4. A tabulation of the major maintenance operations performed during the period, including the effects, if any, on safe operation of the reactor, and the reason for any corrective maintenance required.

5. A brief description of

   a. each change to the facility to the extent that it changes a description of the facility in the Final Safety Analysis Report and

   b. review of changes, tests, and experiments made pursuant to 10 CFR Part 50.59.

6. A summary of the nature and amount of radioactive effluents released or discharged to the environment.

7. A description of any environmental surveys performed outside of the facility.

8. A summary of exposure received by facility personnel and visitors where such exposures are greater than 25 % of limits allowed by 10 CFR Part 20.

9. Changes in facility organization.

12.5.2 Special Reports

Notification shall be made within 24 hours by telephone or telegraph to the Regional Administrator, Region 1, NRC, followed by a written report to the NRC within 14 days in the event of the following:

1. a reportable occurrence, as defined in Section 12.4.2

2. release of radioactivity from the site above allowed limits

3. exceeding the Safety Limit

The written report shall be sent to the Director, Office of Nuclear Reactor Regulation, NRC, with a copy to the Regional Administrator, Region I, NRC. The written report and, to the extent possible, the preliminary telephone or telegraph notification shall:

1. describe, analyze, and evaluate safety implications

2. outline the measures taken to ensure that the cause of the condition is determined

3. indicate the corrective action taken to prevent repetition of the occurrence including chances to procedures

4. evaluate the safety implications of the incident in light of the cumulative experience obtained from the report of previous failure and malfunction of similar systems and components.

12.5.3 Unusual Event Report

A written report shall be forwarded within 30 days to the Director, Office of Nuclear Reactor Regulation, NRC, with a copy to the Regional Administrator, Region I, NRC, in the event of:

1. The discovery of any substantial errors in the transient or accident analysis or in the methods used for such analysis as described in the Safety Analysis Report or in the bases for the Technical Specifications.

2. The discovery of any substantial variance from performance specifications contained in the Technical Specifications or Safety Analysis Report

3. The discovery of any condition involving a possible single failure which, for a system designed against assumed failure, could result in a loss of the capability of the system to perform its safety function.

4. A permanent change in the position of Department Chair or Facility Director.

12.6 RECORDS

There are three categories of records maintained by the MUTR. These categories are lifetime records, five-year records, and annual records. These categories are discussed below. For all of these records, MUTR Annual Reports to the NRC may be used to fulfill part of the record keeping requirements.

Records that must be maintained for the life of the facility are liquid effluent releases, staff exposure records, and as-built facility drawings.

Records that must that be kept for a minimum of five years include records documenting normal operations and maintenance, reportable occurrences, Technical Specifications required surveillance items, radiation and contamination surveys, experiments, fuel records, and approved procedures changes. Reactor Safety Committee meeting minutes must be kept for a minimum of five years.

Records that must be kept for at least one year include supporting documentation such as startup and shutdown checklists, logsheets, and recorder charts.

Records of new operator training and current operator retraining and requalification must be kept for at least one training cycle.

12.7 EMERGENCY PLANNING

The MUTR submitted an updated Emergency Plan on January 5, 2000 under 10 CFR 50.54 (q). The plan follows the guidance given in Regulatory Guide 2.6. The MUTR Emergency Plan has three action levels:

Personnel Emergency: This type of emergency includes those incidents in which an individual has been injured or there exists the potential for the health and safety of personnel within the reactor building to be compromised. The event may warrant termination or alteration of normal routines; including reactor shutdown, however, the continuation of such activities will not harm the reactor.

Unusual Event (Class 1): An unusual event may be initiated by either man-made events or natural phenomena that can be recognized as creating a significant hazard potential that was previously nonexistent. There is usually time available to take precautionary and corrective steps to prevent the escalation of the incident or to mitigate the consequences should it occur. Significant releases of radioactive materials are not expected. One or more elements of the emergency organization are likely to be activated or notified to increase the state of readiness as warranted by circumstances.

Alerts (Class 2): Events leading to an alert would be of such radiological significance as to require notification of the emergency organization and their response as appropriate for the specific emergency situation. Suspension of reactor operations and normal routines is strongly indicated, as is evacuation and/or isolation of affected areas, as necessary.

No action levels are possible at the MUTR beyond Class 2.

12.8 SECURITY PLANNING

The University refers the NRC to University's Physical Security Plan, on file with the NRC. The Plan was submitted to the NRC on January 10, 1997. The University does not propose any changes to the Physical Security Plan in this Application for Renewal. Details of this plan are withheld as per 10 CFR Part 2.790(d)

12.9 OPERATOR TRAINING AND REQUALIFICATION

The MUTR has in effect an operator training and requalification plan that meets the requirements of 10 CFR Part 55.59(c).

12.10 ENVIRONMENTAL REPORTS

An assessment of the environmental impact of the MUTR was performed for the year 2000 relicensing effort. This assessment determined that there were no adverse impacts on the environment due to the continued operation of the facility. This assessment has been provided as a separate document along with this SAR.

13.0 ACCIDENT ANALYSES

13.1 ACCIDENT-INITIATING EVENTS AND SEQUENCES

13.1.1 Maximum Hypothetical Accident

The maximum hypothetical accident for a TRIGA reactor is the failure of one fuel element in air. This could potentially occur during removal of fuel from the reactor pool tank to either the fuel storage pit or a shipping cask.

13.1.2 Insertion or Excess Reactivity

Three possible sources of an inadvertent change in positive reactivity will be discussed. They are:

1. Changes in experimental facilities.
2. Movements of control rods.
3. Addition of fuel element clusters.

13.1.3 Loss of Coolant

Loss of pool water can occur by willful drainage, which would require the switching of several valves, or by a rupture of the beam tube or through tube gaskets.

13.1.4 Loss of Coolant Flow

As the MUTR is designed for natural convection cooling, loss of the primary coolant pump or piping will have no detrimental effect of the core.

13.1.5 Fuel Element Cladding Failure

Mishandling of a fuel bundle or corrosion damage could result in the cladding failure of a fuel element while still in the reactor pool tank.

13.1.6 Experiment Malfunction

Malfunction of an experiment or an experimental apparatus could result in the release of radioactive materials either into the reactor pool tank or into the reactor building. However, Technical Specification limits on experiment types, reactivity values of experiments, and experimental materials, limit the effect an experimental failure could have on the facility. Reactivity limits on experiments result in any conceivable failure having less of an effect than those events postulated in Section 13.1.2. Limits on experimental materials and requirements for experimental construction limit potential releases of volatile radioactive materials to less than those postulated for the TRIGA MHA, Section 13.1.1.

13.1.7 Loss of Normal Electrical Power

In the event that normal electrical power is lost the reactor will shutdown due to the de-energizing of the magnets coupling the control rod to the CRDM. Furthermore, if the reactor ventilation system was

running at the time of power loss, the louvers will automatically close. There is no postulated accident that results from the total loss of electrical power.

13.1.8 External Events

While the Washington, DC metropolitan area does have violent thunderstorms with high winds, the steel frame and cinderblock construction of the reactor building along with the robust construction of the reactor pool tank and the safety cage on top of it make it very unlikely that the building could be damaged severely enough to cause failure of the fuel cladding.

13.1.9 Mishandling or Malfunction of Equipment

Other than the misuse or malfunction of fuel handling equipment, section 13.1.5, there are no other active mechanical components that could interact with the core in a detrimental manner.

13.2 ACCIDENT ANALYSIS AND DETERMINATION OF CONSEQUENCES

The basis for evaluating the hazards associated with the operation of the MUTR is that administrative control by the University will ensure:

1. That excess reactivity will be limited to 2.5 % Δk/k above cold, clean, critical (plus samarium poisoning). This reactivity for 250 kW operation will be allocated approximately as follows:

a.	Power Coefficient of Reactivity	1.0 % Δk/k
b.	Equilibrium Xenon Poisoning	0.8 % Δk/k
c.	Experiments	0.7 % Δk/k

2. That the reactor operation will be supervised by personnel trained in the detection and evaluation of radiological hazards.

3. That the reactor will not be operated at a power level exceeding that licensed by the Nuclear Regulatory Commission.

13.2.1 Maximum Hypothetical Accident

The maximum accident that could occur would be for a fuel manipulation mishap to result in the failure of one fuel element in air and to have the ventilation system fail to shutdown. NUREG/CR-2387 [1] gives the following analysis of such an accident for a 1 MW TRIGA reactor after one year of continuous, full power operation, 365 MWd.

This analysis assumed 50 elements were present in the core and the central element with 4 % of the fission product inventory was severely damaged by an handling accident with a fuel shipping cask. Since the MUTR has 93 elements, the assumption of 50 adds further conservatism as the fission product fraction in the central MUTR element will be lower than 4 %. The isotope loading in one fuel element of the MUTR after an infinite operation at 250 kW is 3828.8 Ci of krypton, 9431 Ci of iodine, and 3933 Ci of xenon. Since one year of continuous operation of the MUTR is 91.25 MWd, the equivalent numbers for the MUTR are 957.2, 2357.8, and 983.3. The release fraction of gaseous and volatile isotopes from TRIGA fuel is given by the following correlation from General Atomics:

$$= 1.5 \times 10^{-5} + 3.6 \times 10^{-3} e^{-\frac{1.34 \times 10^4}{T}}$$

For the MUTR, with a maximum fuel temperature in the center bundle of less than 300 °C, this yields a release fraction of 1.5×10^{-5}. This release fraction yields a release of 14.4 mCi of krypton, 35.4 mCi of iodine, and 14.7 mCi of xenon. Downwind dose equivalents for this release are calculated using the following two correlations developed for the Argonaut reactors. The first is for noble gasses and the second is for iodine.

$$H = 0.27 \sum_i E_i A_i f \frac{x}{Q}$$

in which

H	=	whole body dose equivalent (rem)
E_i	=	absorbed energy of the ith nuclide (MeV)
A_i	=	activity of the ith nuclide (Ci)
f	=	fraction of activity released from fuel
x/Q	=	atmospheric dispersion in s/m^3

$$H_{th} = 2.78 \times 10^{-4} \sum_i \int_{t1}^{t2} A_i f \frac{x}{Q} V f_a D_i e^{-\lambda_i t} dt$$

in which

H_{th}	=	total, integrated, lifetime dose equivalent commitment to the thyroid (rem)
V	=	breathing rate (m^3/h)
f_a	=	fraction of inhaled activity reaching the thyroid
D_i	=	dose conversion factor (rad/Ci), quality factor of one assumed for dose equivalent
λ_i	=	decay constant for the ith nuclide (hr^{-1})
t	=	time of plume passage (hr)
t1,t2	=	start and end times of release (hr with $t_{shutdown}$=0)
A_i,f,x/Q		same as defined above.

The following assumptions were made for constants in the above equations:

x/Q	=	0.01
f_a	=	0.3
V	=	1.2
t_1	=	0
t_2	=	1

Calculations for the dose due to noble gasses are shown in Table 13.1. Note that values for 'A' that were not known were assumed to be 5 MeV, a conservative value. The whole body dose equivalent was calculated to be less than 1 mrem. Calculations for the dose due to the radioiodine are shown in Table 13.2. The calculated dose equivalent to the thyroid was 44.5 mrem. All of these calculations have taken no credit for decay.

Table 13.1: Nobel Gas Committed Dose Equivalent Calculation

Isotope	Activity (Ci)	Release (mCi)	E_i (MeV)	H_i (mrem)
^{83m}Kr	31.0	0.465	5.00	0.0063
^{85m}Kr	71.8	1.076	0.44	0.0013
^{85}Kr	1.2	0.018	0.25	0.0000
^{87}Kr	138.0	2.070	2.80	0.0156
^{88}Kr	197.3	2.959	5.00	0.0399
^{89}Kr	242.5	3.638	5.00	0.0491
^{90}Kr	275.5	4.133	5.00	0.0558
^{133m}Xe	9.8	0.146	5.00	0.0020
^{133}Xe	567.8	8.516	0.19	0.0044
^{135m}Xe	149.5	2.243	5.00	0.0303
^{135}Xe	256.3	3.844	0.62	0.0064
			H Total	0.4841

Table 13.2: Iodine Lifetime Committed Dose Equivalent to the Thyroid Calculation

Isotope	$t_{1/2}$	Unit	λ (hr^{-1})	Activity (Ci)	Release (mCi)	D_i (rad/Ci)	H_{thi} (mrem)
^{131}I	8.1	d	0.0036	270	4.05	$6.3x10^6$	25.49
^{132}I	2.3	h	0.3014	416	6.23	$2.3x10^5$	1.24
^{133}I	20.3	h	0.0341	483	7.25	$1.8x10^6$	12.83
^{134}I	0.9	h	0.7702	636	9.54	$1.1x10^5$	0.73
^{135}I	6.7	h	0.1035	553	8.30	$5.4x10^5$	4.26
						H_{th} Total	44.55

Along with the highly volatile nuclides, other fission products will be released. The most significant of these with respect to biological hazards are radiocesium and radiostrontium. For the MUTR after one year of continuous, full power operation, there will be 1361 Ci of radiostrontium and 647 Ci of radiocesium in the central element. The release fraction for non-gaseous radionuclides from TRIGA fuel is not well established. A value of 10^{-6} was assumed which results in 1.4 mCi of radiostrontium and 0.6 mCi of radiocesium being released from the damaged fuel element. The air concentration that would result from this release is given by

$$C_i = 2.78x10^{-4} \int_{t_1}^{t_2} A_i f \frac{x}{Q} e^{-\lambda_i t} dt$$

in which the variables have the same definitions as given previously. Calculations of the air concentrations and the resultant uptake into a person are presented in Table 13.3. Table 13.3 also compares the uptake to the ALI given in 10 CFR Part 20 Appendix B. All the isotopes for which ALI's are provided have an uptake in the general public at least 10^5 below levels given in Appendix B which represents an annual dose <0.05 mrem or a lifetime committed dose <0.5 mrem for each isotope.

Table 13.3: Radiocesium and Radiostrontium Uptake vs. ALI Limits

Isotope	$t_{1/2}$	Unit	Activity (Ci)	Release (mCi)	C_i (Ci/m^3)	Uptake (μCi)	ALI Ratio
^{89}Sr	52.7	d	250.0	0.250	6.9×10^{-10}	8.5×10^{-4}	1.2×10^{5}
^{90}Sr	27.7	y	7.8	0.008	2.2×10^{-11}	2.5×10^{-5}	1.6×10^{5}
^{91}Sr	9.7	h	323	0.323	8.7×10^{-10}	1.0×10^{-3}	3.9×10^{6}
^{92}Sr	2.7	h	365.5	0.366	9.0×10^{-10}	1.1×10^{-3}	6.5×10^{6}
^{93}Sr	8.3	m	414.5	0.415	2.3×10^{-10}	2.7×10^{-4}	
^{134m}Cs	2.1	y	0.5	0.001	1.3×10^{-12}	1.5×10^{-6}	6.6×10^{10}
^{134}Cs	2.9	h	0.8	0.001	1.9×10^{-12}	2.2×10^{-6}	4.5×10^{7}
^{136}Cs	13.7	d	6.5	0.007	1.8×10^{-11}	2.2×10^{-5}	3.2×10^{7}
^{137}Cs	30	y	124.0	0.124	3.4×10^{-10}	4.2×10^{-4}	4.8×10^{5}
^{138}Cs	32.2	m	515.0	0.515	8.0×10^{-10}	9.7×10^{-4}	6.2×10^{7}

13.2.2 Insertion of Reactivity

13.2.2.1 *Changes in Experimental Facilities*

The MUTR will have a number of experimental facilities. Relative movement of the core and any of these experimental facilities or flooding of the facility can result in a positive addition of reactivity and a subsequent reactor transient. To permit consideration of the results of such an occurrence, the reactivities associated with the various experimental facilities are shown below in Table 13.4. These values have been analytically calculated and checked experimentally with the present University of Maryland reactor [2].

Table 13.4: Reactivity Changes in Experimental Facilities

Facility	Reactivity Worth (%Δk/k)
Beam Ports (simultaneously flooding)	0.49
Pneumatic Transfer Tube (flooding)	Negligible

13.2.2.2 *Movement of Control Rods*

Each of the three control rods in the MUTR has its own motor, which controls its assertion or withdrawal from the core. The rate at which the rods can be withdrawn is 0.80 cm/sec which is equivalent to a reactivity insertion of -0.038% Δk/k per second. In addition the simultaneous withdrawal of the two shim rods and the regulating rod would result in a maximum reactivity insertion of -0.11% Δk/k per second. This amount of positive reactivity is routinely introduced into TRIGA reactors when operating in the pulsed mode.

13.2.2.3 *Insertion of Fuel*

Calculations have been made which show that the addition of a four fuel element cluster into the most central location of the reactor core could produce a positive reactivity of $4.70 or 3.29% Δk/k. This value is in good agreement with experimentally measured fuel element worth in similar TRIGA cores [3]. Since the excess reactivity available to the MUTR will be approximately $3.50, the withdrawal of a central fuel element cluster would render the reactor subcritical.

The maximum credible positive reactivity addition would occur if a central fuel element cluster, after removal from the core, would be reinserted suddenly while the control rods are in the fully out positions. Considering the total available excess reactivity for the University of Maryland reactor this could produce a "Prompt" reactivity addition of $2.5.

The power generated and the energy released during the above prompt excursion can be determined using the experimentally verified TRIGA parameters [3,4] listed in Table 13.5 below.

Table 13.5: Kinetic Parameters for MUTR

Heat capacity of fuel-moderator	$= 1.01 \times 10^5$ J/°C
Heat capacity of entire core tank	$= 9.44 \times 10^4$ J/°C
Prompt temperature coefficient of reactivity	$= 1.25 \times 10^{-4}$ ρ/°C
Prompt neutron generation time	$= 3.9 \times 10^{-5}$ s
Rate of core heat capacity change	$= 143$ J/°C^2
Prompt energy shutdown coefficient	$= 3.2 \times 10^{-5}$ /J·s

The Fuchs-Nordheim power excursion model with variable heat capacity [5] yields the following power pulse characteristics.

Table 13.6: Fuchs-Nordhiem Power Pulse Characteristics

Peak Power	= 3500 MW
Prompt Energy Generated	= 32.7 MW·s
Prompt Fuel Temperature Rise	= 266 °C (average)
Prompt Fuel Temperature Rise	= 486 °C (peak)
Increase in Pool Water Temperature	= 0.35 °C (equilibrium)
Prompt Period	= 2.2 μs
Pulse Half-width	= 7.84 μs

The power pulse described above is of a medium size and of the type that have been performed routinely in other TRIGA reactors [2,3,4]. One should note that the fuel temperature is less than 500 °C. This is far below 1000 °C, the fuel temperature at which the equilibrium hydrogen pressure will be 1800 psi, the cladding rupture pressure as determined by General Atomics.

Now consider the hypothetical situation where the reactor is critical and a fuel cluster is added; equivalent to the insertion of $3.70 of prompt reactivity. Calculations have been made for two initial power levels: 0.01 kW and 250 kW. The results are presented in the following table.

Table 13.7: $3.70 Pulse While Critical

Initial Power (kW)	Initial Temp (°C)	Max Power (MW)	Average Fuel Temp (°C)	Peak Fuel Temp (°C)	Energy Added Per Element (MJ)
0.01	25	7900	407	692	0.55
250	190	9500	581	988	0.66

Once again, one finds that for this hypothetical "worst-case" that the temperature of the fuel does not exceed 1000 °C.

13.2.3 Loss of Coolant

Loss of pool water can occur by willful drainage, which would require the switching of several valves, or by a rupture of the beam tube or through tube gaskets. Although neither of these is likely to occur, it is assumed below that the pool water begins to drain out rapidly. If this were to happen during operation, the operator would be informed of the low water level by the no-flow signal from the flowmeter, if the pump was operational, and the high radiation level registered by the pool monitor. The operator would immediately shut down the reactor and prohibit access to the reactor bridge. He would then attempt to locate and control the leak and would take steps to replace the lost water. A nearby hose is convenient for this purpose. It will supply water fast enough to afford the operator ample time in which to devise a method for controlling the leak or to evacuate the building if the leak cannot be controlled. In addition arrangements have been made with the University Fire Department to supply water to the pool through a skylight directly above the reactor at approximately 1000 gal/min.

The loss of shielding matter will make the MUTR subcritical even assuming that all scram actuators fail. Thus only decay heat will have to be removed by air-cooling. Extensive calculations analyzing the air cooling of TRIGA elements after prolonged operation a 1 MW have shown that maximum temperature does not exceed 850 °C, which is well below both the melting point of the stainless steel cladding and the fuel safety limit [6]. For the University of Maryland reactor, which has a similar number of fuel elements but a fourth of this power level, the maximum bare core fuel temperature will be correspondingly lower.

The dose rate at the reactor bridge would be less than 1.2 R/hr as long as there were more than about 13 ft of water above the tops of the fuel elements. If the core lost its water cover, 1 hr after prolonged operation at full power, the dose rate at the bridge from fission-product decay gammas in the core would be 3000 R/hr. At that time a person standing on the bridge, but not directly exposed to the bare core, would receive 12 R/hr from backscattering from the ceiling of the building. However, these dose rates would fall off gradually, and after 8 hr the dose rate at the bridge directly from the core would be 2,000 R/hr and that from backscattering would be 4.8 R/hr. The dose rate at any point outside the biological shield would be less than 1.2 R/hr at 1 hr after shutdown, and less than 31 mR/hr at 8 hr after shutdown. Under no circumstances would the dose rate at the bridge be high enough to preclude brief operations on the bridge to restore the water level.

13.2.4 Fuel Element Cladding Failure

The effect of the total failure of the cladding of a fuel element rod has received much attention by General Atomic engineers [7,8] They report that TRIGA reactor fuel has over nine years operating experience in both steady-state and pulse conditions. A TRIGA core containing standard stainless steel fuel has been pulsed more than 7000 times in addition to extended periods of around-the-clock steady-state operation at 1500 kW.

13.2.4.1 *Fission Product Inventory*

If the MUTR has been operating for an infinite time at 250 kW and one centrally located fuel element ruptured, isotopes of bromine, iodine, krypton, and xenon would be released. The amount released is the product of the total amount of these volatile fission products present and the release fraction. The total amount of volatile fission products is shown in Table 13.8. These values were obtained experimentally by General Atomics using a smaller fuel element than those in the MUTR. General Atomics has found experimentally that the release fraction for fuel at 600 °C (which is much greater than that expected in MUTR operation) is 1.5×10^{-5}. Thus, Table 13. Shows the maximum release to the reactor pool tank expected even in this unlikely set of conditions.

Table 13.8: Fission Product Release to the Pool Tank Due to Fuel Element Cladding Failure

Fission Product Group	Inventory (mCi)
All iodine	24
All halogens	29
All rare gases	41

13.2.4.2 *Contamination of the Pool Water with Radioactivity*

Contamination materials capable of being neutron activated are removed from the pool water by a demineralizing system. The hazards are associated with a failure of a fuel element would result from the absorption of the water-soluble halogens listed in the above table. These data show that in the event of a cladding failure the water activity may reach a maximum of 6.687×10^{-4} μCi/ml for a 2.26×10^{4} liter volume (6000 gal) of water. Within 24 hours the radiation level would decay to approximately 1.2×10^{-4} μCi/ml. The demineralizer could then be used to remove the remaining fission products.

In these calculations, the assumptions have been made that only gaseous fission products collected between the fuel and the cladding would be released to the water. This appears to be valid since General Atomics has shown that only 100 $\mu g/cm^2 \cdot$day of exposed fuel of UZrH is dissolved in water.

13.2.4.3 *Airborne Fission Product Release*

The situation is considered where a fuel element located in the center of the core has ruptured. The reactor has been operating at 250 kW for an infinite time. The pool water retains the soluble fission products and only the rare gasses escape to the atmosphere. This situation is now the same equivalent to the MHA, Section 13.2.1, only with a much smaller release of materials.

13.3 SUMMARY AND CONCLUSIONS

In the worst case accident, doses to the general public are less than 1 mrem whole body dose and less than 50 mrem thyroid dose. Both of these values are far below the stated acceptable limits of 0.5 rem and 3 rem respectively given in NUREG-1537. Furthermore, those accident scenarios assumed a failure of the reactor building's ventilation system. If the system were to function as designed, the actual doses would be significantly reduced.

13.4 REFERENCES

1. NRC. Credible Accident Analyses for TRIGA and TRIGA-Fueled Reactors. Washington, DC: US Nuclear Regulatory Commission, NUREG/CR-2387 (1982).
2. UMCP. Safety Analysis Report. College Park, MD: University of Maryland (1974).
3. McGarrity, J.M. Addendum to Hazards Summary Report DORF TRIGA. (1967)
4. Coffer, C.O., et al. Characteristics of Large Reactivity Insertions in a High Performance TRIGA U-ZrH Core. GA-6216. General Atomics. (1965)
5. Scalettar, R. "The Fuchs-Nordheim Model with Variable Heat Capacity." Nuclear Science and Engineering. 16: p. 459-460.
6. Penn State University. Penn State TRIGA Reactor Safety Evaluation Report.
7. Foushee, F.C. and R.H. Peters. Summary of TRIGA Fuel Fission Product Release Experiments. GULF-EES-A10801. General Atomics. (1971)
8. Langer, S. and N. Baldwin. Fission Product Release from 250 kW TRIGA Reactor Fuels. GULF-GA-A10781. General Atomics. (1971)

14.0 TECHNICAL SPECIFICATIONS

The MUTR has developed Technical Specifications in accordance with the format specified in ANSI/ANS 15.1-1990. Normal operation of the MUTR within the limits specified in the Technical Specifications will not result in offsite radiation exposures in excess of 10 CFR Part 20 guidelines. Furthermore, the Technical Specifications act to limit both the likelihood and the severity of malfunctions.

15.0 FINANCIAL QUALIFICATIONS

15.1 FINANCIAL ABILITY TO OPERATE A NON-POWER REACTOR

The annual operating costs for the MUTR can be broken down into three main categories: salaries, maintenance, and miscellaneous operations expenses. Expenses that are not included in the aforementioned categories are building and other infrastructure maintenance, which is performed by Facilities Management, and health physics and waste disposal, which is performed by the Department of Environmental Safety. The following two tables document the expected expenses and revenue sources for those expenses for the first five years of the next MUTR license.

Table 15.1: Summary of MUTR Operating Costs

Category	Subcategory	Cost	
		Annual	5 Year
Personnel	Salaries (%FTE)		
	Reactor Director (50 %)	$50 000	$250 000
	Reactor Operations Manager (80 %)	$40 000	$160 000
	Technician (20 %)	$10 000	$50 000
	Total Salary	$100 000	$500 000
	Finger Benefit (27 % of Salary)	$30 000	$150 000
	Total Personnel	$130 000	$650 000
Maintenance	Water Handling System	$1 000	$5 000
	Reactor Controls and Instrumentation	$2 000	$10 000
	Total Maintenance	$3 000	$15 000
Miscellaneous	Supplies, Communications, etc.	$1 500	$7 500
Total Cost		$137 500	$687 500

Table 15.2: Summary of MUTR Funding Sources

Category	Subcategory	Amount of Funding	
		Annual	5 Year
State of Maryland	Salaries (%FTE Funded)		
	Reactor Director (50 %)	$110 000	$550 000
	Reactor Operations Manager (50 %)	$25 000	$125 000
	Technician (20 %)	$10 000	$50 000
	Total Salary Funding	$85 000	$425 000
	Fringe Benefit	$23 000	$115 000
	Total State Funding	$108 000	$540 000
Dept. of Energy	DOE Reactor Sharing	$35 000	$135 000
	DOE University Reactor Instrumentation	$10 000	$50 000
	Total Federal Programs	$45 000	$185 000
Other	Private Sector + non DOE	$10 000	$50 000
Total Funding		$163 000	$815 000

15.2 FINANCIAL ABILITY TO DECOMISSION A NON-POWER REACTOR

The University refers the NRC to the University's Decommissioning Plan, on file with the NRC. The Plan was submitted to the NRC on April 17, 1990. The University does not propose any changes to the Decommissioning Plan in this Application for Renewal.

TECHNICAL SPECIFICATIONS

FOR THE

MARYLAND UNIVERSITY TRAINING REACTOR

License No. R-70

Docket No. 50-166

21 MAR 2000

TABLE OF CONTENTS

TABLE OF CONTENTS i
LIST OF TABLES iv
LIST OF FIGURES v
1.0 DEFINITIONS 1
1.1 ALARA 1
1.2 CHANNEL 1
1.2.1 Channel Calibration 1
1.2.2 Channel Check 1
1.2.3 Channel Test 1
1.3 CONFINEMENT 1
1.4 EXCESS REACTIVITY 1
1.5 EXPERIMENT 1
1.5.1 Routine Experiments 1
1.5.2 Modified Routine Experiments 1
1.5.3 Special Experiments 1
1.6 EXPERIMENTAL FACILITIES 2
1.7 EXPERIMENT SAFETY SYSTEMS 2
1.8 FUEL ELEMENT 2
1.9 FULL POWER 2
1.10 INSTRUMENTED ELEMENT 2
1.11 LIMITING CONDITIONS FOR OPERATION 2
1.12 LIMITING SAFETY SYSTEM SETTING 2
1.13 MEASURING CHANNEL 2
1.14 MEASURED VALUE 2
1.15 MOVEABLE EXPERIMENT 2
1.16 ON CALL 2
1.17 OPERABLE 2
1.18 OPERATING 2
1.19 REACTIVITY WORTH OF AN EXPERIMENT 2
1.20 REACTOR CONSOLE SECURED 3
1.21 REACTOR OPERATING 3
1.22 REACTOR OPERATOR 3
1.23 REACTOR SAFETY SYSTEMS 3
1.24 REACTOR SECURED 3

TABLE OF CONTENTS (CONT.)

1.25 REACTOR SHUTDOWN 3
1.26 REFERENCE CORE CONDITION 3
1.27 REPORTABLE OCCURRENCE 4
1.28 ROD CONTROL 4
1.29 SAFETY CHANNEL 4
1.30 SAFETY LIMIT 4
1.31 SCRAM TIME 4
1.32 SECURED EXPERIMENT 4
1.33 SECURED SHUTDOWN 5
1.34 SENIOR REACTOR OPERATOR 5
1.35 SHUTDOWN MARGIN 5
1.36 SHUTDOWN REACTIVITY 5
1.37 STANDARD CORE 5
1.38 STEADY STATE MODE 5
1.39 TRUE VALUE 5
1.40 UNSCHEDULED SHUTDOWN 5

2.0 SAFETY LIMITS AND LIMITING SAFETY SYSTEM SETTINGS 6
2.1 SAFETY LIMIT 6
2.2 LIMITING SAFETY SYSTEM SETTINGS 7

3.0 LIMITING CONDITIONS FOR OPERATION 8
3.1 REACTOR CORE PARAMETERS 8
3.2 REACTOR CONTROL AND SAFETY SYSTEMS 9
3.3 COOLANT SYSTEMS 13
3.4 CONFINEMENT 14
3.5 VENTILATION SYSTEMS 14
3.6 RADIATION MONITORING SYSTEM 15
3.7 LIMITATIONS ON EXPERIMENTS 16

4.0 SURVEILLANCE REQUIREMENTS 19
4.1 REACTOR CORE PARAMETERS 19
4.2 REACTOR CONTROL AND SAFETY SYSTEMS 19
4.3 COOLANT SYSTEMS 21

TABLE OF CONTENTS (CONT.)

4.4 CONFINEMENT 21

4.5 VENTILATION SYSTEM 22

4.6 RADIATION MONITORING SYSTEMS AND EFFLUENTS 23
4.6.1 Monitoring Systems 23
4.6.2 Effluents 23

4.7 EXPERIMENTS 24

5.0 DESIGN FEATURES 25

5.1 SITE CHARACTERISTICS 25

5.2 REACTOR COOLANT SYSTEM 25

5.3 REACTOR FUEL 26

5.4 FISSIONABLE MATERIAL STORAGE 27

6.0 ADMINISTRATION 28

6.1 ORGANIZATION 28
6.1.1 Structure 28
6.1.2 Responsibility 28
6.1.3 Facility Staff Requirements 28
6.1.4 Selection and Training of Personnel 31

6.2 REVIEW AND AUDIT 31
6.2.1 Reactor Safety Committee 31
6.2.2 Reactor Safety Committee Charter and Rules 32
6.2.3 Reactor Safety Committee Review Function 32
6.2.4 Reactor Safety Committee Audit Function 32
6.2.5 Audit of ALARA Program 33

6.3 RADIATION SAFETY 33

6.4 OPERATING PROCEDURES 33

6.5 EXPERIMENT REVIEW AND APPROVAL 33

6.6 REQUIRED ACTIONS 34
6.6.1 Action To Be Taken In Case Of Safety Limit Violation 34
6.6.2 Actions To Be Taken In The Event Of A Reportable Occurrence 34

6.7 REPORTS 35
6.7.1 Annual Operating Report 35
6.7.2 Special Reports 35
6.7.3 Unusual Event Report 36

6.8 RECORDS 37

LIST OF TABLES

Table 3.1: Reactor Safety Channels: Scram Channels 11
Table 3.2: Reactor Safety Channels: Scram Interlocks 11
Table 3.3: Reactor Safety Channels: Scram Channel Bases 12
Table 3.4: Reactor Safety Channels: Interlock Bases 12
Table 3.5: Minimum Radiation Monitoring Channels 16

LIST OF FIGURES

Figure 6.1: MUTR Position In University Of Maryland Structure 29
Figure 6.2: MUTR Organizational Structure..... 30

Included in this document are the Technical Specifications and the "Bases" for the Technical Specifications. These bases, which provide the technical support for the individual technical specifications, are included for information purposes only. They are not part of the Technical Specifications, and they do not constitute limitations or requirements to which the licensee must adhere.

1.0 DEFINITIONS

1.1 ALARA - The ALARA program (As Low as Reasonably Achievable) is a program for maintaining occupational exposures to radiation and release of radioactive effluents to the environs as low as reasonably achievable.

1.2 CHANNEL - A channel is the combination of sensors, lines, amplifiers, and output devices which are connected for the purpose of measuring the value of a parameter.

1. Channel Calibration - A channel calibration is an adjustment of the channel such that its output corresponds with acceptable accuracy to known values of the parameter which the channel measures. Calibration shall encompass the entire channel, including equipment actuation, alarm, or trip and shall be deemed to include a channel test.

2. Channel Check - A channel check is a qualitative verification of acceptable performance by observation of channel behavior, or by comparison of the channel with other independent channels or systems measuring the same variable.

3. Channel Test - A channel test is the introduction of a signal into the channel to verify that it is operable.

1.3 CONFINEMENT - Confinement means a closure on the overall facility that controls the movement of air into it and out through a controlled path.

1.4 EXCESS REACTIVITY - Excess reactivity is that amount of reactivity that would exist if all reactivity control devices were moved to the maximum reactive condition from the point where the reactor is exactly critical ($k_{eff}=1$)

1.5 EXPERIMENT - Any operation, hardware, or target (excluding devices such as detectors, foils, etc.), that is designed to investigate non-routine reactor characteristics or that is intended for irradiation within the pool, on or in a beamport or irradiation facility, and that is not rigidly secured to a core or shield structure so as to be part of their design.

1. Routine Experiments - Routine Experiments are those which have been previously performed in the course of the reactor program.

2. Modified Routine Experiments - Modified routine experiments are those which have not been performed previously but are similar to routine experiments in that the hazards are neither greater nor significantly different than those for the corresponding routine experiments.

3. Special experiments - Special experiments are those which are not routine or modified routine experiments.

1.6 EXPERIMENTAL FACILITIES - Experimental facilities are facilities used to perform experiments and include, for example, the beam ports, pneumatic transfer systems and any in-core facilities.

1.7 EXPERIMENT SAFETY SYSTEMS - Experiment safety systems are those systems, including their associated input circuits, which are designed to initiate a scram for the primary purpose of protecting an experiment or to provide information which requires manual protective action to be initiated.

1.8 FUEL ELEMENT - A fuel element is a single TRIGA fuel rod.

1.9 FULL POWER - Full licensed power is defined as 250 kW.

1.10 INSTRUMENTED ELEMENT - An instrumented element is a special fuel element in which a sheathed chromel-alumel or equivalent thermocouple is embedded in the fuel.

1.11 LIMITING CONDITIONS FOR OPERATION - Limiting conditions for operation are the lowest functional capability or performance levels of equipment required for safe operation of the facility.

1.12 LIMITING SAFETY SYSTEM SETTING_ - Limiting safety system settings (LSSS) for nuclear reactors are settings for automatic protective devices related to those variables having significant safety functions.

1.13 MEASURING CHANNEL - A measuring channel is the combination of sensor, interconnecting cables or lines, amplifiers, and output device, which are connected for the purpose of measuring the value of a variable.

1.14 MEASURED VALUE - The measured value is the value of a parameter as it appears on the output of a channel.

1.15 MOVEABLE EXPERIMENT - A movable experiment is one where it is intended that all or part of the experiment may be moved in or near the core or into and out of the reactor while the reactor is operating.

1.16 ON CALL - A senior operator is available "on call" if the senior operator is either on the College Park campus or within 10 miles from the facility and can reach the facility within one half hour following a request.

1.17 OPERABLE - Operable means a component or system is capable of performing its intended function.

1.18 OPERATING - Operating means a component or system is performing its intended function.

1.19 REACTIVITY WORTH OF AN EXPERIMENT - The reactivity worth of an experiment is the value of the reactivity change that results from the experiment being inserted into or removed from its intended position.

1.20 REACTOR CONSOLE SECURED - The reactor console is secured whenever all scrammable rods have been fully inserted and verified down and the console key has been removed from the console.

1.21 REACTOR OPERATING - The reactor is operating whenever it is not secured or shutdown.

1.22 REACTOR OPERATOR - A reactor operator (RO) is an individual who is certified to manipulate the controls of the reactor.

1.23 REACTOR SAFETY SYSTEMS - Reactor safety systems are those systems, including their associated input channels, which are designed to initiate automatic reactor protection or to provide information for initiation of manual protective action. Manual protective action is considered part of the reactor safety system.

1.24 REACTOR SECURED - The reactor is secured when:

1. Either there is insufficient moderator available in the reactor to attain criticality or there is insufficient fissile material present in the reactor to attain criticality under optimum available conditions of moderator and reflection, or

2. The following conditions exist:

   a. The minimum number of neutron absorbing control devices are fully inserted or other safety devices are in shutdown position, as required by technical specifications, and

   b. The console key switch is in the off position and the key is removed from the lock, and

   c. No work is in progress involving core fuel, core structure, installed control rods, or control rod drives unless they are physically decoupled from the control rods, and

   d. No experiments in or near the reactor are being moved or serviced that have, on movement, a reactivity worth exceeding the maximum value allowed for a single experiment, or one dollar, whichever is smaller.

1.25 REACTOR SHUTDOWN - The reactor is shut down if it is subcritical by at least one dollar in the reference core condition and for all allowed ambient conditions with the reactivity worth of all installed experiments included.

1.26 REFERENCE CORE CONDITION - The reference core condition is the reactivity condition of the core when it is at 20 °C and the reactivity worth of xenon is zero (i.e., cold, clean, and critical).

1.27 REPORTABLE OCCURRENCE - A reportable occurrence is any of the following, which occurs during reactor operation:

1. Operation with actual safety-system settings for required systems less conservative than the Limiting Safety-System Settings specified in technical specifications 2.2.

2. Operation in violation of the Limiting Conditions for Operation established in the technical specifications.

3. A reactor safety system component malfunction which renders or could render the reactor safety system incapable of performing its intended safety function unless the malfunction or condition is discovered during maintenance tests or periods of reactor shutdowns. (Note: Where components or systems are provided in addition to those required by the Technical Specifications, the failure of the extra components or systems is not considered reportable provided that the minimum number of components or systems specified or required perform their intended reactor safety function.)

4. An unanticipated or uncontrolled change in reactivity greater than one dollar.

5. Abnormal and significant degradation in reactor fuel, or cladding, or both, coolant boundary, or containment boundary (excluding minor leaks) where applicable which could result in exceeding prescribed radiation exposure limits of personnel or environment, or both.

6. An observed inadequacy in the implementation of administrative or procedural controls such that the inadequacy causes or could have caused the existence or development of an unsafe condition with regard to reactor operations.

1.28 ROD-CONTROL - A control rod is a device fabricated from neutron absorbing material or fuel, which is used to establish neutron flux changes and to compensate for routine reactivity losses. A control rod may be coupled to its drive unit allowing it to perform a safety function when the coupling is disengaged.

1.29 SAFETY CHANNEL - A safety channel is a measuring channel in the reactor safety system.

1.30 SAFETY LIMIT - Safety limits are limits upon important process variables that are found to be necessary to reasonably protect the integrity of certain of the physical barriers that guard against the uncontrolled release of radioactivity.

1.31 SCRAM TIME - Scram time is the elapsed time between the initiation of a scram signal and a specified movement of a control or safety device.

1.32 SECURED EXPERIMENT - A secured experiment is any experiment, experimental facility, or component of an experiment that is held in a stationary position relative to the reactor by mechanical means. The restraining forces must be substantially greater than those to which the experiment might be subjected by hydraulic, pneumatic, buoyant, or other forces with are normal to the operating environment of the experiment, or by forces that can arise as a result of credible malfunctions.

1.33 SECURED SHUTDOWN - Secured shutdown is achieved when the reactor meets the requirements of the definition of "reactor secured" and the facility administrative requirements for leaving the facility with no licensed reactor operators present.

1.34 SENIOR REACTOR OPERATOR - A senior reactor operator (SRO) is an individual who is certified to direct the activities of reactor operators.

1.35 SHUTDOWN MARGIN - Shutdown margin is the minimum shutdown reactivity necessary to provide confidence that the reactor can be made subcritical by means of the control and safety systems starting from any permissible operation condition and with the most reactive rod in its most reactive position, and that the reactor will remain subcritical without further operator action.

1.36 SHUTDOWN REACTIVITY - Shutdown reactivity is the value of the reactivity of the reactor with all control rods in their least reactive position (e.g., inserted). The value of shutdown reactivity includes the reactivity value of all installed experiments and is determined with the reactor at ambient conditions.

1.37 STANDARD CORE - A standard core is an arrangement of standard TRIGA fuel in the reactor grid plate.

1.38 STEADY STATE MODE - Steady state mode operation shall mean operation of the reactor with the mode selector switch in the STEADY STATE position.

1.39 TRUE VALUE - The true value is the actual value of a parameter.

1.40 UNSCHEDULED SHUTDOWN - An unscheduled shutdown is defined as any unplanned shutdown of the reactor caused by actuation of the reactor safety system, operator error, equipment malfunction, or a manual shutdown in response to conditions which could adversely affect safe operation, not to include shutdowns which occur during testing or check-out operations.

2.0 SAFETY LIMITS AND LIMITING SAFETY SYSTEM SETTING

2.1 SAFETY LIMIT

Applicability

This specification applies to the temperature of the reactor fuel.

Objective

The objective is to define the maximum fuel element temperature that can be permitted with confidence that no damage to the fuel element cladding will result.

Specification

The temperature in a standard TRIGA fuel element shall not exceed 1000 °C under any conditions of operation, with the fuel fully immersed in water.

Basis

The important parameter for TRIGA reactor is the UZrH fuel element temperature. This parameter is well suited as a single specification especially since it can be measured. A loss in the integrity of the fuel element cladding could arise from a build-up of excessive pressure between the fuel-moderator and the cladding if the fuel temperature exceeds the safety limit. The pressure is caused by the presence of air, fission product gases, and hydrogen from the dissociation of the hydrogen and zirconium in the fuel-moderator. The magnitude of this pressure is determined by the fuel-moderator temperature and the ratio of hydrogen to zirconium. The data indicate that the stress in the cladding due to hydrogen pressure from the dissociation of ZrH_x will remain below the ultimate stress if the temperature in the fuel does not exceed 1000 °C and the fuel cladding is water-cooled.

It has been shown by experience that operation of TRIGA reactors at a power level of 1000 kW will not result in damage to the fuel. Several reactors of this type have operated successfully for several years at power levels up to 1500 kW. Analysis and measurements on other TRIGA reactors have shown that a power level of 1000 kW corresponds to a peak fuel temperature of approximately 400 °C.

2.2 LIMITING SAFETY SYSTEM SETTINGS

Applicability

This specification applies to the reactor scram setting that prevents the reactor fuel temperature from reaching the safety limit.

Objective

The objective is to provide a reactor scram to prevent the safety limit (fuel element temperature of 1000 °C) from being reached.

Specification

The limiting safety system setting shall be 350 °C as measured by the instrumented fuel element. The instrumented element may be located at any position in the core.

Basis

A Limiting Safety Setting of 350 °C provides a safety margin of 650 °C. A part of the safety margin is used to account for the difference between the temperature at the hot spot in the fuel and the measured temperature resulting from the actual location of the thermocouple. If the thermocouple element is located in the hottest position in the core, the difference between the true and measured temperatures will be only a few degrees since the thermocouple junction is at the mid-plane of the element and close to the anticipated hot spot. If the thermocouple element is located in a region of lower temperature, such as on the periphery of the core, the measured temperature will differ by a greater amount from that actually occurring at the core hot spot. Calculations have shown that if the thermocouple element were located on the periphery of the core, the true temperature at the hottest location in the core will differ from the measured temperature by no more than a factor of two. Thus, when the temperature in the thermocouple element reaches the setting of 350 °C, the true temperature at the hottest location would be no greater than 700 °C, providing a margin to the safety limit of at least 300 °C. This margin is ample to account for the remaining uncertainty in the accuracy of the fuel temperature, measurement channel, and any overshoot in reactor power resulting from a reactor transient during steady state mode operation.

3.0 LIMITING CONDITIONS FOR OPERATION

3.1 REACTOR CORE PARAMETERS

Applicability

These specifications shall apply to the reactor at all times it is operating.

Objective

The objectives are to ensure that the reactor can be controlled and shut down at all times and that the safety limits will not be exceeded.

Specifications

1. The excess reactivity relative to the cold critical conditions, with or without experiments in place shall not be greater than $3.50.

2. The shutdown margin shall not be less than $0.50.

3. Core configurations:

   a. The reactor shall only be operated with a standard core.

   b. No fuel may be inserted or removed from the core unless the reactor is subcritical by more than the worth of the most reactive fuel element.

   c. No control rods may be removed form the core unless a minimum of four fuel bundles is removed from the core.

4. No operation with damaged fuel except to locate such fuel.

5. The reactivity coefficients for the reactor are:

Fuel:	-1.2 ¢/ °C
Moderator:	+3.0 ¢/ °C
Power:	-0.53 ¢/kW

6. The burnup of U-235 in the UZrH fuel matrix shall not exceed 50 % of the initial concentration.

Bases

1. While specification 3.1.1, in conjunction with specification 3.1.2, tends to overconstrain the excess reactivity, it helps ensure that the operable core is similar to the core analyzed in the FSAR.

2. The value of the shutdown margin as required by specification 3.1.2 assures that the reactor can be shutdown from any operating condition even if the highest worth control rod should remain in the fully withdrawn position.

3. Specification 3.1.3 ensures that the operable core is similar to the core analyzed in the FSAR. It also ensures that accidental criticality will not occur during fuel or control rod manipulations.

4. Specification 3.1.4 limits the fission product release that might accompany operation with a damaged fuel element.

5. The reactivity coefficients in Specification 3.1.5 ensure that the net reactivity feedback is negative.

6. General Atomic tests of TRIGA fuel indicate that keeping fuel element burnup below 50 % of the original ^{235}U loading will avoid damage to the fuel from fission product buildup.

3.2 REACTOR CONTROL AND SAFETY SYSTEMS

These specifications apply to reactor control and safety systems and safety-related instrumentation that must be operable when the reactor is in operation.

Objective

The objective of these specifications is to specify the lowest acceptable level of performance or the minimum number of operable components for the reactor control and safety systems.

Specifications

1. The drop time of each of the three standard control rods from the fully withdrawn position to the fully inserted position shall not exceed one second.

2. Maximum positive reactivity insertion rate by control rod motion shall not exceed $0.30 per second.

3. The reactor safety channels shall be operable in accordance with Table 3.1, including the minimum number of channels and the indicated maximum or minimum set points, for the scram channels.

4. The safety interlocks shall be operable in accordance with Table 3.2, including the minimum number of interlocks.

5. The Beam Port and Through Tube interlocks may be bypassed during a reactor operation with the permission of the Reactor Director.

6. A minimum of one reactor power channel, calibrated for reactor thermal power, must be attached to a recording device sufficient for auditing of reactor operation history.

Bases

1. Specification 3.2.1 assures that the reactor will be shutdown promptly when a scram signal is initiated. Experiments and analysis have indicated that for the range of transients anticipated for the MUTR TRIGA reactor, the specified control rod drop time is adequate to assure the safety of the reactor.

2. Specification 3.2.2 establishes a limit on the rate of change of power to ensure that the normally available reactivity and insertion rate cannot generate operating conditions that exceed the Safety Limit. (See FSAR)

3. Specification 3.2.3 provides protection against the reactor operating outside of the safety limits. Table 3.3 describes the basis for each of the reactor safety channels.

4. Specification 3.2.4 provides protection against the reactor operating outside of the safety limits. Table 3.4 describes the basis for each of the reactor safety interlocks.

5. Specification 3.2.5 ensures that reactor interlocks will always serve their intended purpose.

6. Specification 3.2.6 provides for a means to monitor reactor operations and verify that the reactor is not operated outside of its license condition.

Table 3.1: Reactor Safety Channels: Scram Channels

Scram Channel	Minimum Operable	Scram Setpoint
Reactor Power Level	2	Not to exceed 120 %
Fuel Element Temperature	1	Not to exceed 175 °C
Reactor Power Channel Detector Power Supply	2	Loss of power supply voltage to chamber
Manual Scram	1	N/A
Console Electrical Supply	1	Loss of electrical power to the control console

Table 3.2: Reactor Safety Channels: Interlocks

Interlock/Channel	Function
Log Power Level	Provide signal to period rate and minimum source channels
Startup Countrate	Prevent control rod withdrawal when neutron count rate is less than 1 cps.
Safety 1 Trip Test	Prevent control rod withdrawal when Safety 1 Trip Test switch is activated.
Plug Electrical Connection	Disable magnet power when Beam Port or Through Tube plug is removed.
Rod Drive Control	Prevent simultaneous manual withdrawal of two or more control rods in the steady state mode of operation.

Table 3.3: Reactor Safety Channels: Scram Channel Bases

Scram Channel	Bases
Reactor Power Level Fuel Element Temperature	Provides protection to assure that the reactor can be shut down before the safety limit on the fuel element temperature will be exceeded.
Reactor Power Channel Detector Power Supply	Provides protection to assure that the reactor cannot be operated unless the neutron detectors that input to each of the linear power channels are operable.
Manual Scram	Allows the operator to shut down the reactor if an unsafe or abnormal condition occurs.
Console Electric Supply	Assures that the reactor cannot be operated without a secure electric supply.

Table 3.4: Reactor Safety Channels: Interlock Bases

Interlock/Channel	Bases
Log Power Level	This channel is required to provide a neutron detector input signal to the start up count rate channel.
Startup Countrate	Assures sufficient amount of startup neutrons are available to achieve a controlled approach to criticality.
Safety 1 Trip Test	Assures that the 1 cps interlock cannot be bypassed by creating an artificial 1 cps signal with the Safety 1 trip test switch
Plug Electrical Connection	Assures that the reactor cannot be operated with Beamport or Through Tube plugs removed without further precautions.
Rod Drive Control	Limits the maximum positive reactivity insertion rate available for steady state operation.

3.3 COOLANT SYSTEMS

Applicability

This specification applies to the quality and quantity of the primary coolant in contact with the fuel cladding at the time of reactor startup.

Objective

1. To minimize the possibility for corrosion of the cladding on the fuel elements.

2. To minimize neutron activation of dissolved materials.

3. To ensure sufficient biological shielding during reactor operations.

4. To maintain water clarity.

Specification

1. A minimum of 15 ft. of coolant shall be above the core.

2. A continuous radiation area monitor shall be mounted near the top of reactor pool tank. This monitor shall be able to scram the reactor, sound an audible alarm, and isolate the confinement building.

3. Gross gamma levels and isotopic analysis of the pool water shall be performed monthly, interval not to exceed six weeks.

4. Conductivity of the pool water shall be no higher than $5x10^{-6}$ S/cm and the pH shall be between 5.0 and 7.5. Conductivity shall be measured before each reactor operation. pH shall be measured monthly, interval not to exceed six weeks.

Bases

1. Specification 3.3.1 ensures that both sufficient cooling capability and sufficient biological shielding are available for safe reactor operation.

2. Specification 3.3.2 ensures that a significant fuel failure with release of radioactive materials will be determined and that any large releases will be mitigated by the specified protective actions.

3. Specification 3.3.3 combined with 3.3.2 ensures that any small leaks in a fuel element will not go unnoticed for an extended period of time.

4. A small rate of corrosion continuously occurs in a water-metal system. In order to limit this rate, and thereby extend the longevity and integrity of the fuel cladding, a water cleanup system is required. Experience with water quality control at many reactor facilities has shown that maintenance within the specified limit provides acceptable control. In addition, by limiting the concentration of dissolved materials in the water, the radioactivity of neutron activation products is limited. This is consistent with the ALARA principle, and tends to decrease the inventory of radionuclides in the entire coolant system, which will decrease personnel exposures during maintenance and operation.

3.4 CONFINEMENT

Applicability

This specification applies to that part of the facility that contains the reactor, its controls and shielding.

Objective

The objective of these specifications is to ensure that sufficient confinement volume is available for the dilution of radioactive releases.

Specifications

1. The reactor shall be housed in a closed room designed to restrict leakage. The closed room does not include the West balcony area.

2. The minimum free air volume of the reactor room shall be $1.7 \times 10^9 cm^3$.

Bases

These specifications will dilute and delay the release of radioactive materials and ensure that the release conditions are similar to those assumed in the SAR.

3.5 VENTILATION SYSTEMS

Applicability

These specifications apply to the ventilation systems for the reactor building.

Objective

The objective of these specifications is to ensure that air exchanges between the reactor confinement building and the environment do not impact negatively on the general public.

Specifications

1. Air within the reactor building shall not be exchanged with other occupied spaces in the building.

2. All locations where ventilation systems exchange air with the environment shall have failsafe closure mechanisms.

Bases

1. This specification ensures that radioactive releases inside the reactor building will not be transported to the remainder of the building.

2. This specification ensures that the reactor building can always be isolated from the environment.

3.6 RADIATION MONITORING SYSTEM

Applicability

This specification applies to the radiation monitoring information that must be available to the reactor operator during reactor operation.

Objective

The objective is to assure that sufficient radiation monitoring information is available to the operator to assure safe operation of the reactor.

Specification

1. The reactor shall not be operated unless the radiation area monitor channels listed in Table 3.5 are operable.

2. For a period of time not to exceed 48 hours for maintenance or calibration to the radiation monitor channels, the intent of specification 3.6.1 will be satisfied if they are replaced with portable gamma sensitive instruments having their own alarms or which shall be observable by the reactor operator.

3. The alarm set points shall be stated in a facility operating procedure.

4. The campus radiation safety organization shall maintain an environmental monitor at the MUTR site boundary.

5. All effluents from the MUTR shall conform to the standards set forth in 10 CFR Part 20.

Table 3.5: Minimum Radiatiion Monitoring Channnels

Radiation Area Monitors	Function	Minimum Number Operable
Exhaust Radiation Monitor	Monitor radiation levels in Reactor Bay area at an Exhaust Fan location	A minimum of 1 of the 2 monitors shall be operable
Bridge Radiation Monitor	Monitor radiation levels in Reactor Bay area at the Reactor Bridge location	

Basis

The radiation area monitors provide information to operating personnel of any impending or existing danger from radiation so that there will be sufficient time to evacuate the facility and take the necessary steps to prevent the spread of radioactivity to the surroundings.

The additional function of the radiation area monitor that monitors the reactor bay area is to warn personnel entering the building of high radiation levels if the pool water level should decrease to the level of inadequate biological shielding.

The intent of 3.6.5 and 3.6.6 are to ensure that facility does not lead to a dose to the general public greater than that allowed by 10 CFR Part 20.

3.7 LIMITATIONS ON EXPERIMENTS

Applicability

The specification applies to experiments installed in the reactor and its experimental facilities.

Objective

The objective is to prevent damage to the reactor or excessive release of radioactive material in the event of an experiment failure.

Specifications

The reactor shall not be operated unless the following conditions governing experiments exist.

1. Each non-secured experiment shall have a reactivity worth less than $1.00.

2. The reactivity worth of any single experiment shall be less than $1.00.

3. The total reactivity worth of in-core experiments shall not exceed $3.00 , including, the potential reactivity which might result from experimental malfunction and experiment flooding or voiding.

4. Experiments containing materials corrosive to reactor components, compounds highly reactive with water, potentially explosive materials, and liquid fissionable materials shall be doubly encapsulated.

5. Explosive materials in quantities greater than 25 mg TNT or its equivalent shall not be irradiated in the reactor or experimental facilities. Explosive materials in quantities less than 25 mg may be irradiated provided the pressure produced upon detonation of the explosive has been calculated and/or experimentally demonstrated to be-less than the design pressure of the container. Total explosive material inventory in the reactor facility may not exceed 100 mg TNT or its equivalent.

6. Experiment materials, except fuel materials, which could off-gas, sublime, volatilize, or produce aerosols under (1) normal operating conditions of the experiment or reactor, (2) credible accident conditions in the reactor or (3) possible accident conditions in the experiment shall be limited in activity such that if 100 % of the gaseous activity or radioactive aerosols produced escaped to the reactor room or the atmosphere, the airborne concentration of radioactivity within the reactor room averaged over a year would not exceed the limit of Table I of Appendix B of 10 CFR Part 20.

In calculations pursuant to 3.7.6 above, the following assumptions shall be used:

a. If the effluent from an experimental facility exhausts through a holdup tank, which closes automatically on high radiation level, at least 10 % of the gaseous activity or aerosols produced will escape.

b. If the effluent from an experimental facility exhausts through a filter installation designed for greater than 99 % efficiency for 0.3 μm particles, at least 10 % of these particles can escape.

7. Each fueled experiment shall be controlled such that the total inventory of iodine isotopes 131 through 135 in the experiment is no greater than 5 mCi.

Bases

1. This specification is intended to provide assurance that the worth of a single unsecured experiment will be limited to a value such that the safety limit will not be exceeded if the positive worth of the experiment were to be inserted suddenly.

2. The maximum worth of a single experiment is limited so that its removal from the cold critical reactor will not result in the reactor achieving a power level high enough to exceed the core temperature safety limit. Since experiments of such worth must be fastened in place, its inadvertent removal from the reactor operating at full power would result in a relatively slow power increase such that the reactor protective systems would act to prevent high power levels from being attained.

3. The maximum worth of all experiments is also limited to a reactivity value such that the cold reactor will not achieve a power level high enough to exceed the core temperature safety limit if the experiments were removed inadvertently.

4. Double encapsulation is required to lessen the experimental hazards of some types of materials.

5. This specification is intended to prevent damage to reactor components resulting from failure of an experiment involving explosive materials, especially the accidental detonation of the explosive.

6. This specification is intended to reduce the likelihood that airborne activities in excess of the limits of Table 11 of Appendix B of 10 CFR Part 20 will be released to the atmosphere outside the facility boundary.

7. The 5 mCi limitation on iodine 131 through 135 assures that in the event of failure of a fueled experiment leading to total release of the iodine, the exposure dose at the exclusion area boundary will be less than that allowed by 10 CFR Part 20 for an unrestricted area. (See SAR)

4.0 SURVEILLANCE REQUIREMENTS

4.1 REACTOR CORE PARAMETERS

Applicability

These specifications apply to the surveillance requirements for reactivity limits.

Objective

The objective of these specifications is to ensure that the specifications of Section 3.1 are satisfied.

Specifications

The excess reactivity and the shutdown margin shall be determined annually, at intervals not to exceed 15 months, and after each time the core fuel configuration is changed.

Bases

The excess reactivity is required to determine the limits on incore experiments and the shutdown margin is calculated to ensure the reactor is capable of being shtudown under all conditions. The long-term changes in these parameters, excluding those caused by a change in the core configuration, are slow to develop and an annual schedule is sufficient to monitor them.

4.2 REACTOR CONTROL AND SAFETY SYSTEMS

Applicability

These specifications apply to the surveillance requirements for reactor control and safety systems.

Objective

The objective of these specifications is to ensure that the specifications of Section 3.2 are satisfied.

Specifications

1. The reactivity worth of each standard control rod shall be determined annually, intervals not to exceed 15 months, and after each time the core fuel configuration is changed or a control rod is changed.

2. The control rod withdrawal and insertion speeds shall be determined annually, intervals not to exceed 15 months, or whenever maintenance or repairs are made that could affect rod travel times.

3. Control rod drop times shall be measured annually, intervals not to exceed 15 months, or whenever maintenance or repairs are made that could affect their drop time.

4. All scram channels and power measuring channels shall have an channel test, including trip actions with safety rod release and specified interlocks performed after each secured shutdown, following any shutdown greater than 24 hours, or quarterly, intervals not to exceed 4 months. Scram channels shall be calibrated annually, intervals not to exceed 15 months.

5. Operability tests shall be performed on all affected safety and control systems after any maintenance is performed.

6. A channel calibration shall be made of the linear power level monitoring channels annually, intervals not to exceed 15 months.

7. A visual inspection of the control rod poison sections shall be made biennially, intervals not to exceed 28 months.

8. A visual inspection of the control rod drive and scram mechanisms shall be made annually, intervals not to exceed 15 months.

Bases

1. The reactivity worth of the control rods, specification 4.2.1, is measured to assure that the required shutdown margin is available and to provide a means to measure the reactivity worth of experiments. Long term effects of TRIGA reactor operation are such that measurements of the reactivity worths on an annual basis is adequate to insure that no significant changes in shutdown margin have occurred.

2. The control rod withdrawal and insertion rates, specification 4.2.2, are measured to insure that the limits on maximum reactivity insertion rates are not exceeded.

3. Measurement of the control rod drop time, specification 4.2.3, ensures that the rods can perform their safety function properly.

4. The surveillance requirement specified in specification 4.2.4 for the reactor safety scram channels ensures that the overall functional capability is maintained.

5. The surveillance test performed after maintenance or repairs to the reactor safety system as required by specification 4.2.5 ensures that the affected channel will perform as intended.

6. The linear power level channel calibration specified in specification 4.2.6 will assure that the reactor will be operated at the licensed power levels.

7. Specification 4.2.7 assures that a visual inspection of control rod poison sections is made to evaluate corrosion and wear characteristics and any damage caused by operation in the reactor.

8. Specification 4.2.8 assures that a visual inspection of control drive mechanisms is made to evaluate corrosion and wear characteristics and any damage caused by operation in the reactor.

4.3 COOLANT SYSTEMS

Applicability

These specifications apply to the surveillance requirements of the reactor coolant systems.

Objective

The objective of these specifications is to ensure the operability of the reactor coolant system as described in Section 3.3.

Specifications

1. Pool water gross gamma activity shall be determined monthly, at intervals not to exceed six weeks.

2. Pool water conductivity and pH shall be determined monthly, at intervals not to exceed six weeks.

3. The primary coolant level shall be verified before each reactor startup or daily during operations exceeding 24 hours.

Bases

1. Gross gamma activity measurements are conducted to detect fission product releases from damaged fuel element cladding.

2. Specification 4.3.2 ensures that poor pool water quality could not exist for long without being detected. Years of experience at the MUTR have shown that pool water analysis on a monthly basis is adequate to detect degraded conditions of the pool water in a timely manner.

3. Specification 4.3.3 ensures that sufficient water exists above the core to provide both sufficient cooling capacity and an adequate biological shield.

4.4 CONFINEMENT

Applicability

This specification applies to that part of the facility, which contains the reactor, its controls and shielding.

Objective

The objective of these specifications is to ensure that radioactive releases from the confinement can be limited.

Specifications

Prior to a reactor startup the isolation of the confinement building shall be visually verified.

Bases

This specification ensures that the minimal leakage rate assumed in the SAR is actually present during reactor operations in order to limit the release of radioactive material to the environs.

4.5 VENTILATION SYSTEM

Applicability

This specification applies to the reactor ventilation system.

Objective

The objective is to assure that provisions are made to restrict the amount of radioactivity released to the environment.

Specification

1. The reactor room air conditioning system shall be contained and can circulate air within the confines of the reactor room. Air and exhaust gases from the reactor room shall be released to the environment only through the ventilation exhaust system (Ventilation fan) or as a result of leakage around exit doors.

2. The ability to secure the ventilation system shall be verified before each reactor startup.

Bases

The facility is designed such that in the event that excessive airborne radioactivity is detected the ventilation system shall be shutdown to minimize transport of airborne materials. Analysis indicates that in the event of a major fuel element failure personnel would have sufficient time to evacuate the facility before the maximum permissible dose (10 CFR Part 20) is exceeded.

4.6 RADIATION MONITORING SYSTEMS AND EFFLUENTS

4.6.1 Monitoring Systems

Applicability

This specification applies to the surveillance requirements for the Radiation Area Monitoring System (RAMS).

Objective

The objective of these specifications is to ensure the operability of each radiation area monitoring channel as required by Section 3.4 and to ensure that releases to the environment are kept below allowable limits.

Specifications

1. A channel calibration shall be made for each channel listed in Table 3.2 annually but at intervals not to exceed 15 months or whenever maintenance or repairs are made that could affect their calibration.

2. A channel test shall be made for each channel listed in Table 3.2 prior to starting up the reactor.

Bases

Specifications 4.6.1.1 and 4.6.1.2 ensure that the various radiation area monitors are checked and calibrated on a routine basis, in order to assure compliance with 10 CFR Part 20.

4.6.2 Effluents

Applicability

This specification applies to the surveillance requirements for air and water effluents.

Objective

The objective of these specifications is to that releases to the environment are kept below allowable limits.

Specifications

1. Reactor building air samples shall be counted for gross gamma activity monthly, intervals not to exceed 6 weeks.

2. A sample of any water discharged from the reactor building sump shall be counted for gross gamma activity before its release to the environs.

Bases

Specifications 4.6.2.1 and 4.6.2.2 ensure that the facility effluents comply with 10 CFR Part 20.

4.7 EXPERIMENTS

Applicability

This specification applies to experiments that operate with emergency systems or with connections to the reactor protection systems.

Objective

The objective of this specification is to ensure the operability of the reactor protection and emergency systems at all times.

Specifications

Any experiment which operates with emergency systems or with connections to the reactor protection systems shall have a channel check performed on those systems both daily and before any reactor startup when the experiment is being performed.

Basis

The specification in this part ensures that the reactor protection systems will operate as intended during experiments involving those systems.

5.0 DESIGN FEATURES

5.1 SITE CHARACTERISTICS

This specification applies to the reactor facility and its site boundary.

Objective

The objective is to assure that appropriate physical security is maintained for the reactor facility and the radioactive materials contained within it.

Specifications

1. The reactor site boundary shall consist of the outer walls of the reactor building and the area enclosed by the loading dock fence.

2. The restricted area shall consist of all areas interior to the reactor building including the west balcony and lower entryway.

3. The controlled area shall consist of the free air volume containing the reactor pool tank, the hot room, and the water room.

Bases

These specifications assure that appropriate control is maintained over access to the facility by members of the general public.

5.2 REACTOR COOLANT SYSTEM

This specification applies to the pool containing the reactor and to the cooling of the core by the pool water.

Objective

The objective is to assure that coolant water shall be available to provide adequate cooling of the reactor core and adequate radiation shielding.

Specifications

1. The reactor core shall be cooled by natural connective water flow.

2. The pool water inlet pipe is equipped with a siphon break at the surface of the pool.

3. The pool water return (outlet) pipe shall not extend more than 50.8 cm (20 in) below the overflow outlet pipe when fuel in the core.

Bases

Specification 5.2.1 is based on thermal and hydraulic calculations and operation of other TRIGA reactors that show that a core can operate in a safe manner at power levels up to 1500 kW with natural convection flow of the coolant.

Specification 5.2.2 and 5.2.3 ensures that the pool water level can normally decrease only by 50.8 cm (20 in) if the coolant piping where to rupture and siphon water from the reactor tank. Thus, the core will be covered by at least 4.57 m (15 ft) of water.

5.3 REACTOR FUEL

Applicability

This specification applies to the fuel elements used in the reactor core.

Objective

The objective is to assure that the fuel elements are of such design and fabricated in such a manner as to permit their use with a high degree of reliability with respect to their physical and nuclear characteristics, and that the fuel used in the reactor has characteristics consistent with the fuel assumed in the SAR and the license.

Specifications

The individual unirradiated standard TRIGA fuel elements shall have the following characteristics:

1. Uranium content: a maximum of 9.0 w/o uranium enriched to less than 20 % ^{235}U
2. Zirconium hydride atom ratio: nominal 1.5 - 1.8 hydrogen-to-zirconium, ZrH_x
3. Cladding: 304 stainless steel, nominal thickness of 0.508 mm (.020 in)
4. The standard TRIGA core shall consist of 93 standard TRIGA fuel elements and 3 control rods

Basis

The design basis of the standard TRIGA core demonstrates that 250 kW steady state operation presents a conservative limitation with respect to safety limits for the maximum temperature generated in the fuel.

5.4 FISSIONABLE MATERIAL STORAGE

This specification applies to the storage of reactor fuel at times when it is not in the reactor core.

Objective

The objective is to assure that fuel that is being stored will not become critical and will not reach an unsafe temperature.

Specifications

1. All fuel elements shall be stored either in a geometrical array where the k-effective is less than 0.8 for all conditions of moderation or stored in an approved fuel shipping container.

2. Irradiated fuel elements and fueled devices shall be stored in an array which will permit sufficient natural convection cooling by water or air such that the fuel element or fueled device temperature will not exceed design values.

Basis

The limits imposed by Specifications 5.4.1 and 5.4.2 are conservative and assure safe storage.

6.0 ADMINISTRATION

6.1 ORGANIZATION

The Maryland University Training Reactor (MUTR) is owned and operated by the University of Maryland, College Park. Its position in the university's structure is shown in Figure 6.1

The university will provide whatever resources are required to maintain the facility in a condition that poses no hazard to the general public or to the environment.

6.1.1 Structure

Figure 6.2 shows the MUTR organizational structure.

6.1.2 Responsibility

Responsibility for the safe operation of the reactor facility and radiological safety will rest in the Facility Director. The members of the organization chart shown in Figure 6.2 shall be responsible for safeguarding the public and facility personnel from undue radiation exposure and for adhering to all requirements of the operating license.

6.1.3 Facility Staff Requirements

1. The minimum staffing when the reactor is operating shall be:

    a. A licensed reactor operator (RO) or a licensed senior reactor operator (SRO) shall be present in the control room whenever the reactor is operating.

    b. A minimum of two persons must be present in the facility or in the Chemical and Nuclear Engineering Building when the reactor is operating: the operator in the control room and a second person who can be reached from the control room who is able to carry out prescribed written instructions which may involve activating elements of the Emergency Plan.

    c. A licensed SRO must be present or readily available on call.

2. A list of reactor facility personnel by name and telephone number shall be readily available in the control room for use by the operator. The list shall include:

    a. Management personnel

    b. Radiation safety personnel

    c. Licensed operators

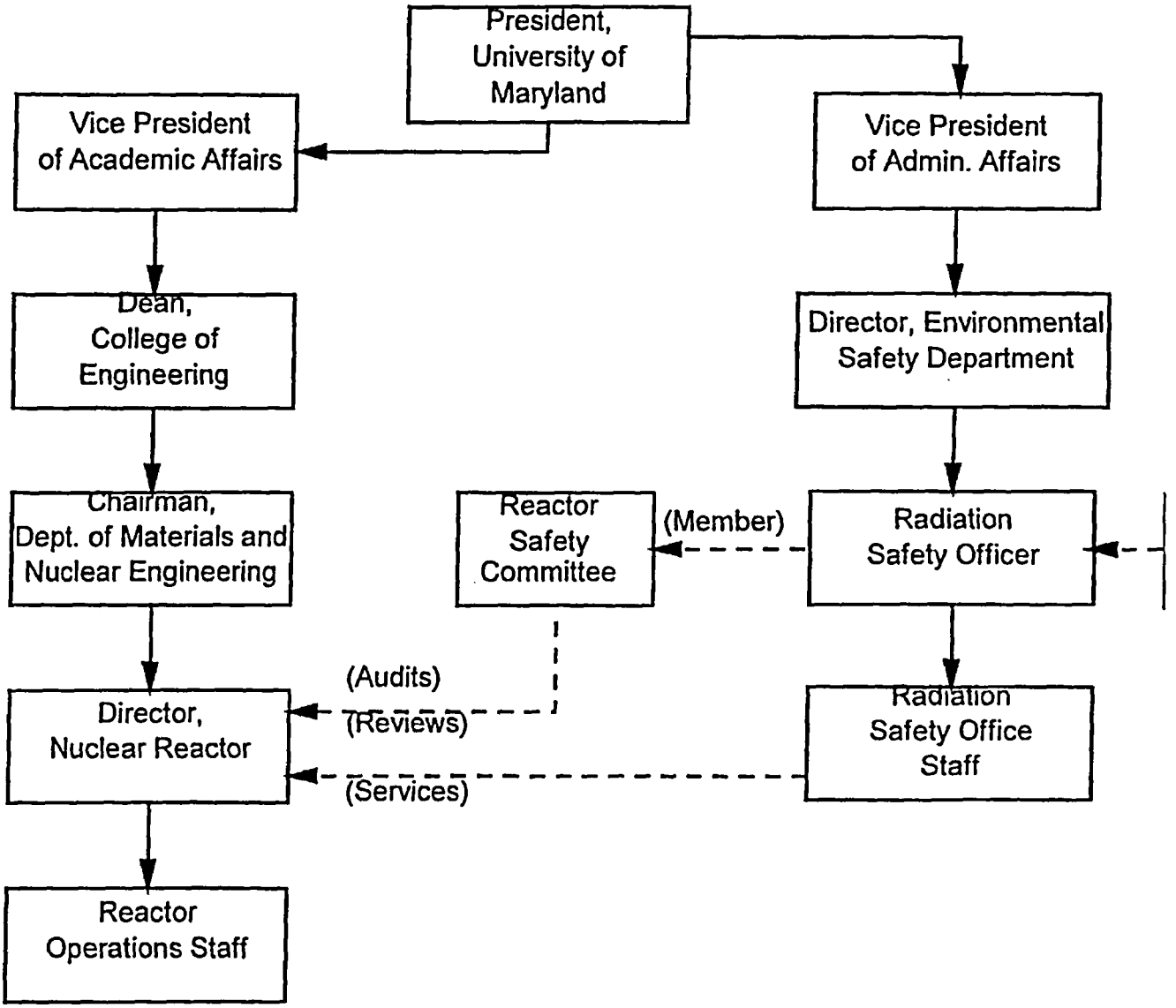

Figure 6.1: MUTR Position In University Of Maryland Structure

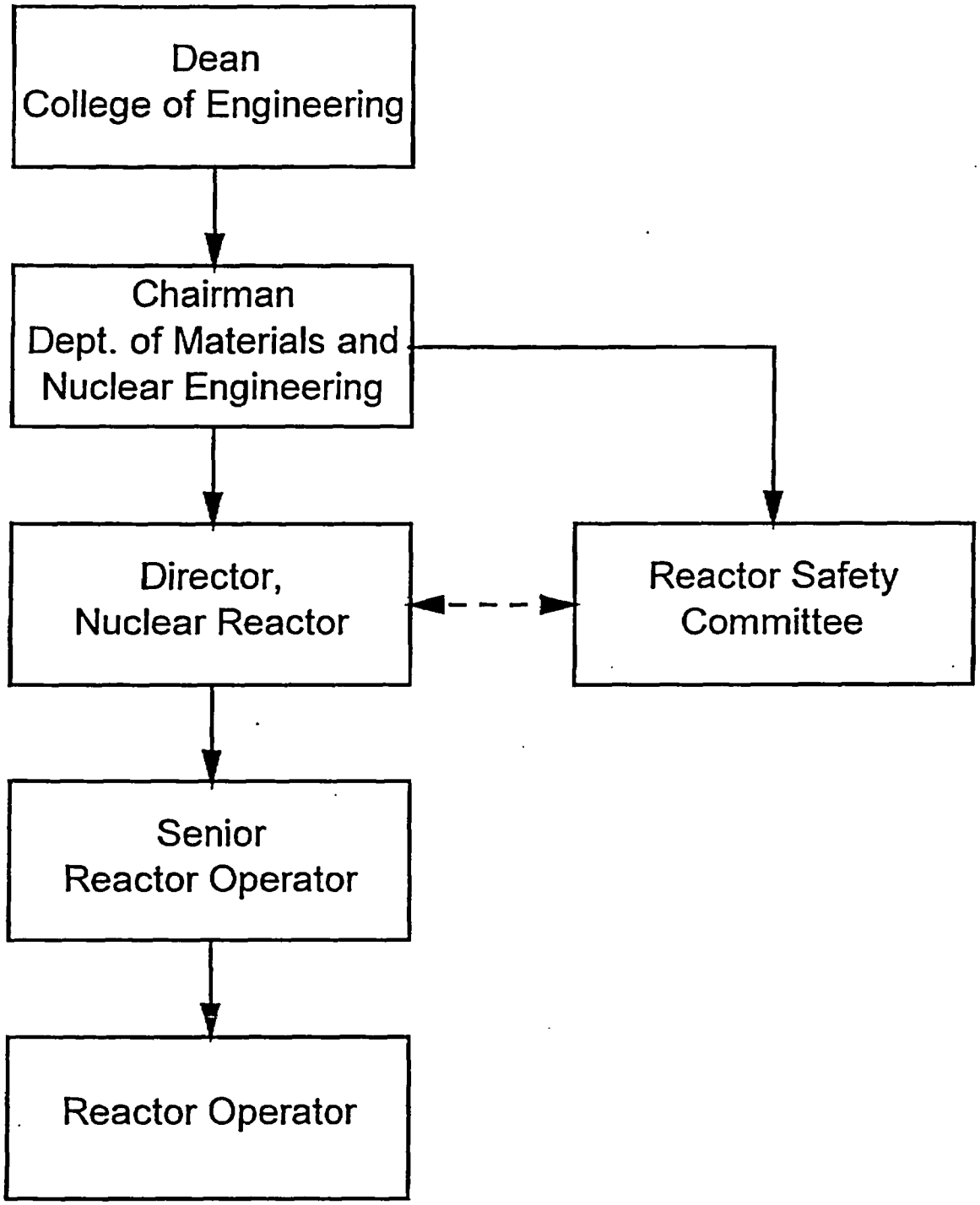

Figure 6.2: MUTR Organizational Structure

3. The following operations must be supervised by a senior reactor operator:

   a. Initial startup and approach to power following new fuel loading or fuel rearrangement

   b. When experiments are being manipulated in the core that have an estimated worth greater than $0.80

   c. Removal of control rods or fuel manipulations in the core

   d. Resumption of operation following an unscheduled shutdown (This requirement is waived if the shutdown is initiated by an interruption of electrical power to the plant.)

6.1.4 Selection and Training of Personnel

The selection and training of operations personnel shall be in accordance with the following:

1. Responsibility - The Facility Director or his designated alternate is responsible for the training and requalification of the facility reactor operators and senior reactor operators.

2. Requalification Program

   a. Purpose - To insure that all operating personnel maintain proficiency at a level equal to or greater than that required for initial licensing

   b. Scope - Lectures, written examinations, and evaluated console manipulations will be used to insure operator proficiency is maintained

6.2 REVIEW AND AUDIT

6.2.1 Reactor Safety Committee

A Reactor Safety Committee (RSC) shall exist for the purpose of reviewing matters relating to the health and safety of the public and facility staff and the safe operation of the facility. It is appointed by and reports to the Chairperson of the Materials and Nuclear Engineering Department. The RSC shall consist of a minimum of five persons with expertise in the physical sciences and preferably some nuclear experience. Permanent members of the committee are the Facility Director and the Campus Radiation Safety Officer or that office's designated alternate, neither may serve as the committee's chairperson. Qualified alternates may serve on the committee. Alternates may be appointed by the Chairperson of the RSC to serve on a temporary basis. At least one committee member must be from outside the Department of Materials and Nuclear Engineering.

6.2.2 Reactor Safety Committee Charter And Rules

1. The RSC shall meet at least twice per year, and more often as required.

2. A quorum of the RSC must have at least three members and the Campus Radiation Safety Officer (or designated alternate). No more than two alternates may be used to make a quorum. MUTR staff members may not constitute the majority of a voting quorum.

3. Minutes of all meetings will be retained in a file and distributed to all RSC members.

6.2.3 Reactor Safety Committee Review Function

The RSC shall review the following:

1. Experiments referred to it by the Facility Director because of the degree of hazard involved or the unusual nature of the experiment

2. Reportable occurrences (see Section 6.6)

3. Violations of technical specifications or license

4. Proposed changes to the facility license, Emergency Plan, Technical Specifications, and experiments or changes made pursuant to 10 CFR Part 50.59

5. Operating procedures

6. Audit reports and inspection reports

7. Operating abnormalities having safety significance

8. Results of emergency drills

6.2.4 Reactor Safety Committee Audit Function

1. An annual audit and review of the reactor operations will be performed by an outside individual or group familiar with research reactor operations. They shall submit a report to the Facility Director and the Reactor Safety Committee.

2. The following shall be reviewed:

   a. Reactor operators and operational records for compliance with internal rules, procedures, and regulations, and with license provisions

   b. Existing operating procedures for adequacy and accuracy

   c. Plant equipment performance and its surveillance requirements

   d. Records of releases of radioactive effluents to the environment

   e. Operator training and requalification

6.2.5 Audit Of ALARA Program

The Facility Director or his designated alternate shall conduct an audit of the reactor facility ALARA Program at least once per calendar year (not to exceed fifteen months). The results of the audit shall be presented to the RSC at the next scheduled meeting. This audit may occur as part of a review of the overall campus ALARA program.

6.3 RADIATION SAFETY

A radiation safety program following the requirements established in 10 CFR Part 20 will be undertaken by the Radiation Safety Office. The facility director will ensure that ALARA principles are followed during all facility activities.

6.4 OPERATING PROCEDURES

Written procedures, reviewed and approved by the Reactor Safety Committee, shall be in effect and followed for the following items prior to performance of the activity. The procedures shall be adequate to assure the safety of the reactor, but should not preclude the use of independent judgment and action should the situation require such:

1. Start-up, operation, and shutdown of the reactor

2. Installation or removal of fuel elements, control rods, experiments, and experimental facilities

3. Maintenance procedures that could have an effect on reactor safety

4. Periodic surveillance of reactor instrumentation and safety systems and area monitors as required by these Technical Specifications

Substantive changes to the above procedures may be made with the approval of the Facility Director. All such temporary changes to procedures shall be documented and subsequently reviewed by the Reactor Safety Committee.

6.5 EXPERIMENT REVIEW AND APPROVAL

1. Routine experiments may be performed at the discretion of the duty senior reactor operator without the necessity of further review or approval.

2. Modified routine experiments shall be reviewed and approved in writing by the Facility Director, or designated alternate.

3. Special experiments shall be reviewed by the RSC and approved by the RSC and the Facility Director or desired alternate prior to initiation.

4. The review of an experiment listed in subsections 6.5.2 and 6.5.3 above, shall consider its effect on reactor operation and the possibility and consequences of its failure, including, where significant, chemical reactions, physical integrity, design life, proper cooling, interaction with core components, and any reactivity effects.

6.6 REQUIRED ACTIONS

6.6.1 Action To Be Taken In Case Of Safety Limit Violation

In the event a safety limit is exceeded:

1. The reactor shall be shut down and reactor operation shall not be resumed until authorized by the NRC.

2. An immediate report of the occurrence shall be made to the Chairman, Reactor Safety Committee, and reports shall be made to the NRC in accordance with Section 6.7.2 of these specifications, and

3. A report shall be prepared which shall include an analysis of the cause and extent of possible resultant damage, efficacy of corrective action, and recommendations for measures to prevent or reduce the probability of recurrence. This report shall be submitted to the Reactor Safety Committee for review and then submitted to the NRC when authorization is sought to resume operation of the reactor.

6.6.2 Actions to Be Taken In The Event Of a Reportable Occurrence

In the event of a reportable occurrence, as defined in these Technical Specifications, the following actions will be taken:

1. Immediate action will be taken to correct the situation and to mitigate the consequences of the occurrence.

2. The reactor shall be shut down and reactor operation shall not be resumed until authorized by the Reactor Safety Committee.

3. The event shall be reported to the Reactor Director who will report to the NRC as required in section 6.7.2.

4. The Reactor Safety Committee will investigate the causes of the occurrence. The Reactor Safety Committee will report its findings to the NRC and Dean, College of Engineering. The report shall include an analysis of the causes of the occurrence, the effectiveness of corrective actions taken, and recommendations of measures to prevent or reduce the probability or consequences of recurrence.

6.7 REPORTS

6.7.1 Annual Operating Report

A report summarizing facility operations will be prepared annually for the reporting period ending June 30. This report shall be submitted by September 30 of each year to the Director, Office of Nuclear Reactor Regulation, NRC, with a copy to the NRC Document Control Desk. The report shall include the following:

1. A brief narrative summary of results of surveillance tests and inspections required in section 4.0 of these Technical Specifications

2. A tabulation showing the energy generated in MW·hr for the year

3. A list of unscheduled shutdowns including the reasons therefore and corrective action taken, if any

4. A tabulation of the major maintenance operations performed during the period, including the effects, if any, on safe operation of the reactor, and the reason for any corrective maintenance required

5. A brief description of

   a. Each change to the facility to the extent that it changes a description of the facility in the Final Safety Analysis Report

   b. Review of changes, tests, and experiments made pursuant to 10 CFR Part 50.59.

6. A summary of the nature and amount of radioactive effluents released or discharged to the environment

7. A description of any environmental surveys performed outside of the facility

8. A summary of exposure received by facility personnel and visitors where such exposures are greater than 25 percent of limits allowed by 10 CFR Part 20

9. Changes in facility organization

6.7.2 Special Reports

Notification shall be made within 24 hours by telephone or telegraph to the Regional Administrator, Region 1, NRC, followed by a written report to the within 14 days in the event of the following:

1. A reportable occurrence, as defined in Section 1.0

2. Release of radioactivity from the site above allowed limits

3. Exceeding the Safety Limit

The written report shall be sent to the Director, Office of Nuclear Reactor Regulation, NRC, with a copy to the Regional Administrator, Region I, NRC. The written report and, to the extent possible, the preliminary telephone or telegraph notification shall:

1. Describe, analyze, and evaluate safety implications

2. Outline the measures taken to ensure that the cause of the condition is determine

3. Indicate the corrective action taken to prevent repetition of the occurrence including chances to procedures

4. Evaluate the safety implications of the incident in light of the cumulative experience obtained from the report of previous failure and malfunction of similar systems and components

6.7.3 Unusual Event Report

A written report shall be forwarded within 30 days to the Director, Office of Nuclear Reactor Regulation, NRC, with a copy to the Regional Administrator, Region I, NRC, in the event of:

1. Discovery of any substantial errors in the transient or accident analysis or in the methods used for such analysis as described in the Safety Analysis Report or in the bases for the Technical Specifications

2. Discovery of any substantial variance from performance specifications contained in the Technical Specifications or Safety Analysis Report

3. Discovery of any condition involving a possible single failure which, for a system designed against assumed failure, could result in a loss of the capability of the system to perform its safety function

4. A permanent change in the position of Department Chair or Facility Director

6.8 RECORDS

1. The following records shall be retained for a period of at least five years:

   a. Normal reactor facility operation and maintenance

   b. Reportable occurrences

   c. Surveillance activities required by Technical Specifications

   d. Facility radiation and contamination surveys

   e. Experiments performed with the reactor

   f. Reactor fuel inventories, receipts, and shipments

   g. Approved changes in procedures required by these Technical Specifications

   h. Minutes of the Reactor Safety Committee meetings

2. Retraining and requalification records of current licensed operators shall be retained for at least one training cycle.

3. The following records shall be retained for the lifetime of the facility:

   a. Liquid radioactive effluents released to the environs

   b. Radiation exposure for all facility personnel

   c. As-built facility drawing

4. Requirement 6.8.1 (a) above does not include supporting documents such as checklists, logsheets and recorder charts, which shall be maintained for a period of at least one year.

5. Applicable annual reports, if they contain any of the required information may be used as records in subsection 6.8.3 above.

ENVIRONMENTAL REPORT

FOR THE

MARYLAND UNIVERSITY TRAINING REACTOR

License No. R-70

Docket No. 50-166

UNIVERSITY OF MARYLAND

18 56

21 MAR 00

TABLE OF CONTENTS

TABLE OF CONTENTS i

1.0 INTRODUCTION 1

2.0 DESCRIPTION OF FACILITY 2

2.1 INTRODUCTION AND LOCATION 2

2.2 BUILDING 2

2.3 COOLING, MAKE-UP WATER, AND CLEAN-UP SYSTEMS 2

2.4 VENTILATION SYSTEM 2

2.5 LIQUID WASTE STORAGE 3

2.6 DRY WASTE STORAGE 3

3.0 ENVIRONMENTAL EFFECTS OF SITE PREPARATION AND FACILITY CONSTRUCTION 4

4.0 ENVIRONMENTAL EFFECTS OF FACILITY OPERATION 5

4.1 THERMAL EFFLUENTS 5

4.2 RADIOACTIVE GASEOUS EFFLUENTS 5

4.3 RADIOACTIVE LIQUID EFFLUENTS 6

4.4 SOLID RADIOACTIVE WASTE 6

4.5 HAZARDOUS AND CHEMICAL WASTE 6

4.6 MIXED WASTE 6

5.0 ENVIRONMENTAL EFFECTS OF ACCIDENTS 7

6.0 UNAVOIDABLE EFFECTS OF FACILITY CONSTRUCTION AND OPERATION 10

7.0 ALTERNATIVES TO CONSTRUCTION AND OPERATION OF THE FACILITY 11

8.0 LONG-TERM EFFECTS OF FACILITY CONSTRUCTION AND OPERATION 12

9.0 COST AND BENEFITS OF FACILITY AND ALTERNATIVES 13

1.0 INTRODUCTION

Section 50.30, "Filing of Application for licenses; oath and affirmation" of 10 CFR Part 50, "Domestic Licensing of Production and Utilization Facilities," requires that each application for a license to operate a facility include, along with other information, an environmental impact appraisal. The discussion that follows complies with the guidelines presented in Part 51, Title 10 of the Code of Federal Regulations. It is the purpose of thus appraisal to deal with the probable impacts on the environment that can be attributed to the operation of the Maryland University Training Reactor (MUTR).

2.0 DESCRIPTION OF FACILITY

2.1 INTRODUCTION AND LOCATION

The MUTR is a pool-type, light water cooled and reflected, TRIGA reactor licensed for 250 kW steady-state operation. The core is on the bottom of an aluminum tank that is 2.13 m (7 ft.) in diameter and 6.48 m (21.25 ft) in height. The biological shield surrounding the core consists of ordinary concrete and 22.7 m^3 (6000 gal) of demineralized water. The core is shielded by approximately 5.33 (17.5 ft.) of water on the top and by 0.68 m (2 ft.) of water and 1.98 m (6.5 ft.) of concrete on the sides. The water system, which includes a heat exchanger, filters, demineralizers, a circulation pump, and a variety of measurement devices, is used for cooling and purification.

The reactor is housed in a building connected to the Chemical and Nuclear Engineering Building, which is located on the northern edge of the main campus at College Park, Prince George's County, Maryland.

2.2 BUILDING

The reactor is housed in a building connected to the Chemical and Nuclear Engineering Building. The reactor building is 15.24 m (50 ft.) long, 14.02 m (46 ft.) wide, and 7.92 m (26 ft.) high, with a center bay 11.43 m (37.5 ft.) high and 6.10 m (20 ft.) long. There are no exterior conduits, pipelines, electrical, or mechanical structures, or transmission lines attached to the nuclear reactor facility other than utility service facilities that are similar to those required in other campus buildings.

2.3 COOLING, MAKE-UP WATER, AND CLEAN-UP SYSTEMS

The reactor tank contains 22.7 m^3 (6000 gal) of light water used for moderation, shielding, and cooling. Since the core transfers 250 kW of thermal energy to the coolant, the heat must be removed from the coolant during prolonged operation of the reactor at full power. A single counter-flow, plate-type heat exchanger is used to transfer heat from the primary coolant to the secondary coolant. The secondary coolant is city water that is released to the sewer system after it passes through the heat exchanger.

Make-up water for the pool is obtained from the city water supply. To prevent irradiation of minerals and impurities existing in ordinary tap water, the water is filtered and demineralized before it is pumped into the pool.

To keep the pool water free from particulate matter and ions that gradually accumulate, the water is circulated through a clean-up system before it passes through the heat exchangers. The clean-up system consists of a large micro filter and an ion exchanger.

To preclude the contamination of the city water supply by the reactor facility, the city water supply passes through a backflow prevention valve after entering the reactor pump room before it is distributed to the make-up water and cooling systems.

2.4 VENTILATION SYSTEM

The reactor building has two roof mounted ventilating exhaust fans and two motor-operated louvers for the intake of air. The fans and louvers can be controlled from the reactor console and from various locations in the building. Each of the main exhaust fans is capable of handling 2.83 m^3/s (6000 cfm) of air. The volume of the reactor building is 1700 m^3 (60034 ft^3); therefore, the ventilation system provides for seven air exchanges per hour when operating. The two intake louvers at the ground level in the west

wall provide exterior air. Air from the west balcony labs is exhausted in the main reactor area through two motor-operated louvers. CO_2 from the pneumatic transfer system exhausts into the reactor bay area just below one of the ventilating exhaust fans. A radiation detector monitors the air before it is exhausted through the fan on the east penthouse wall. The building ventilation system turns off automatically when any area monitor reading exceeds a preset limit.

Temperature control for the reactor building is maintained by a combination of systems. Two wall-mounted air conditioners are found in the west balcony labs. These units are permanently set to recirculation mode. Another wall unit is located in the hot room above the glove box for the pneumatic system. This unit exhausts to the reactor bay area. A final wall unit is located in the control room, and it also exhausts to the reactor bay area. A large air handler sits on the south balcony to cool the air in the reactor bay. This air handler blows air over a tube bank through which runs the Chemical and Nuclear Engineering Building chilled water supply in a closed loop. Floor level radiator units along the walls of the reactor building provide heat for the reactor building. Campus steam passes through a heat exchanger and heats water that is circulated in a closed loop through the radiators. A temperature-controlled valve regulates the campus steam flow to maintain temperature.

2.5 LIQUID WASTE STORAGE

Liquid waste resulting from primary coolant overflow from the pool tank, primary or secondary leaks in the pump room, waste water from floor cleaning, or waste water from experiments drains into the sump via the pool tank overflow pipe or the drain grates around the base of the pool tank concrete shield. All liquid wastewater that ends up in the sump and the holdup tank will be considered and treated as low level wastes. The holdup tank is located in an excavation in the water handling room called the sump.

The sump and holdup tank have a total capacity of 4980 liters (1300 gal). The system contains a sump pump and associated piping and valves to allow for the following modes of operation: sump recirculation, sump to holdup tank, holdup tank to sump, sump to sewer system, holdup tank to sewer system. The sump to sewer system mode of operation also includes a set of particle filters to allow only dissolved materials to enter the sewer system. It is possible to realign the sewer outlet back to the sump to filter the sump. A city water line with a spring check valve provides clean water for dilution or washdown.

When the sump requires emptying, it is sampled and the activity of its contents determined. Based on the activity determination, the waste will be drained, stored for decay, or diluted with fresh water to release levels and drained. The concentration of radioactive material released in liquid waste will be in compliance with 10 CFR Part 20 limits. The liquid waste enters the city sewer system.

2.6 DRY WASTE STORAGE

Dry waste is stored in marked waste drums whose disposal is handled by the campus's Department of Environmental Safety in accordance with state and federal law.

3.0 ENVIRONMENTAL EFFECTS OF SITE PREPARATION AND FACILITY CONSTRUCTION

Since 1959, when the reactor facility was built, there has been no noticeable effect on the terrain, vegetation, nearby waters, or aquatic life. The societal, economic, and esthetic impacts of the construction of the facility have been no greater than that associated with the construction of any other university facility.

4.0 ENVIRONMENTAL EFFECTS OF FACILITY OPERATION

4.1 THERMAL EFFLUENTS

The MUTR has a maximum thermal power output of 250 kW. The environmental effects of thermal effluents of this order of magnitude are negligible. During prolonged operation of the reactor at full power, the waste heat is rejected to the city sewer system by means of a cooling system with a heat exchanger. However, during routine, low power reactor operation, the cooling system is not needed due to the low production of heat.

4.2 RADIOACTIVE GASEOUS EFFLUENTS

^{16}N, a gamma-emitting isotope with approximately a 7-second half-life, is produced during reactor operation by the fast neutron irradiation of oxygen in the reactor pool water, $^{16}O(n, p)^{16}N$. Although the transport time for the N^{16} through the column of water above the core provides for ^{16}N decay, a water jet diffuser installed above the core imparts turbulence to the water and further increases the distance ^{16}N must travel before reaching the surface. This action significantly reduces the radiation intensity at the surface of the pool.

^{41}Ar, which is produced by neutron activation of air, is produced in the beam ports, the through tube, and in the reactor pool tank water. The ^{41}Ar produced in the beam ports and through tubes is contained during normal operation by the tube plugs and a gasketed Plexiglas cover bolted over the plugged ports. The ^{41}Ar produced in the reactor pool water will exchange with the non-radioactive argon in the atmosphere of the reactor building by normal diffusive processes. It is estimated that during a typical operation year of 30 MWhr that the release of ^{41}Ar from the pool tank into the reactor building would be 100 mCi. If this were to be released instantly into the reactor building, it would result in an ^{41}Ar concentration of 5.88×10^{-5} $\mu Ci/cm^3$. Using the ventilation flow rate of 170 m^3/min per fan, the 109.2 min half-life of ^{41}Ar, and the values for continuous ^{41}Ar release from 10 CFR Part 20 of 1×10^{-8} $\mu Ci/cm^3$ the dose to an individual residing at the ventilation fan outlet can be calculated. The concentration of ^{41}Ar in the ventilation stream can be calculated by solving the following ordinary differential equation:

$$\frac{dN(t)}{dt} = N(t)\left(-2\frac{\dot{m}}{V} - \lambda\right)$$

Where N(t) is the amount of ^{41}Ar in the confinement atmosphere, m is the mass flow rate of the exhaust fans, V is the confinement volume, and λ is the decay constant for ^{41}Ar. Solving this yields $N(t)=5.88 \times 10^{-5} e^{-0.206t}$ $\mu Ci/cm^3$. Using the public release value of 1×10^{-8} $\mu Ci/cm^3 \cdot yr$ = 50 mrem for ^{41}Ar from Appendix B of 10 CFR Part 20, integrating N(t) over a period of infinite time, and taking the ratio of that with the Appendix B value results in a dose of 2.7 mrem. Note that this value is extremely conservative, as the ventilation system is not typically running during operations, the actual release would occur gradually, and no person would actually reside at the ventilation fan outlet.

The University of Maryland Radiation Safety Office collects monthly low volume air samples at the reactor as a routine surveillance program. The air sampler consists of a charcoal filter to trap gases, a silica gel filter to trap ^3H and ^{14}C compounds, and a micropore filter used to trap particulate matter. No significant radiation level above background has been detected.

4.3 RADIOACTIVE LIQUID EFFLUENTS

All liquid wastewater that ends up in the sump and holdup tank will be considered and treated as low level wastes. The holdup tank is located in an excavation called the sump. The sump and the holdup tank have a total capacity of 4980 liters (1300 gal). The system contains a sump pump and associated piping and valves to allow for the following modes of operation: sump recirculation, sump to holdup tank, holdup tank to sump, sump to sewer system, holdup tank to sewer system. The sump to sewer system mode of operation also includes a set of particle filters to allow only dissolved materials to enter the sewer system. It is possible to realign the sewer outlet back to the sump to filter the sump. A city water line with a spring check valve provides clean water for dilution or washdown.

There are several ducts leading to the sump/holdup tank system. The grillwork around the base of the reactor pool tank, the sink in the hot room, the sink along the west side of the reactor pool tank, and the pool tank overflow drain into the sump.

When the sump requires emptying, it is sampled and the activity of its contents determined. Based on the activity determination, the waste will be drained, stored for decay, or diluted with fresh water to release levels and drained. The concentration of radioactive material released in liquid waste will be in compliance with 10 CFR Part 20 limits. The liquid waste enters the city sewer system.

4.4 SOLID RADIOACTIVE WASTE

The generation of high level radioactive waste such as spent fuel elements is not anticipated during the term of the license research since the ^{235}U burnup rate is about 1 g/yr. Fission products during this period are contained in the fuel rods. Radioactive material from sample irradiation will be stored in the facility until it meets the applicable criteria before being disposed of by the Campus Radiation Safety Office.

Among users of radioisotopes, the MUTR facility is one of the lowest producers of low-level radioactive waste. The University of Maryland Department of Environmental Safety collects, packages, and ships the solid radioactive waste to approved sites for storage. The transportation of such waste is done in approved shipping containers in accordance with existing NRC-DOT regulations.

4.5 HAZARDOUS AND CHEMICAL WASTE

Little hazardous or chemical waste is produced by the MUTR. What waste that is produced is disposed of according to campus hazardous waste procedures maintained by the Department of Environmental Safety.

4.6 MIXED WASTE

The generation of mixed waste is avoided if possible by the MUTR. In the event that quantities of mixed waste are generated that require disposal, such disposal will be handled by the Department of Environmental Safety in accordance with applicable state and federal laws.

5.0 ENVIRONMENTAL EFFECTS OF ACCIDENTS

There are two classes of accidents that could result in an environmental impact. These are the failure of an experiment with a resulting release of radioactive material and the failure of the fuel element cladding resulting in the release of fission products.

The first class of accidents can involve either a reactivity accident with fuel failure or destructive failure of the experimental material itself. With the Technical Specification limits on experiments there is no plausible reactivity excursion due to experimental failure that could result in fuel damage. Furthermore, limits on experimental construction and quantities of iodine in experiments preclude the release to the environs of any significant quantities of radioactive material from experiment failures.

The second class of accident; however, can result in the release of a significant quantity of radiation to the environment. The maximum accident that could occur would be for a fuel manipulation mishap to result in the failure of one fuel element in air and to have the ventilation system fail to shutdown. NUREG/CR-2387 gives the following analysis of such an accident for a 1 MW TRIGA reactor after one year of continuous, full power operation, 365 MWd.

This analysis assumed 50 elements were present in the core and the central element with 4 % of the fission product inventory was severely damaged by an handling accident with a fuel shipping cask. Since the MUTR has 93 elements, the assumption of 50 adds further conservatism as the fission product fraction in the central MUTR element will be lower than 4 %. The isotope loading in one fuel element of the MUTR after an infinite operation at 250 kW is 3828.8 Ci of krypton, 9431 Ci of iodine, and 3933 Ci of xenon. Since one year of continuous operation of the MUTR is 91.25 MWd, the equivalent numbers for the MUTR are 957.2, 2357.8, and 983.3. The release fraction of gaseous and volatile isotopes from TRIGA fuel is given by the following correlation from General Atomics:

$$= 1.5\times10^{-5} + 3.6\times10^{-3} e^{-\frac{1.34\times10^{4}}{T}}$$

For the MUTR, with a maximum fuel temperature in the center bundle of less than 300 °C, this yields a release fraction of 1.5×10^{-5}. This release fraction yields a release of 14.4 mCi of krypton, 35.4 mCi of iodine, and 14.7 mCi of xenon. Downwind dose equivalents for this release are calculated using the following two correlations developed for the Argonaut reactors. The first is for noble gasses and the second is for iodine.

$$H = 0.27\sum_i E_i A_i f \frac{x}{Q}$$

in which

H	=	whole body dose equivalent (rem)
E_i	=	absorbed energy of the ith nuclide (MeV)
A_i	=	activity of the ith nuclide (Ci)
f	=	fraction of activity released from fuel
x/Q	=	atmospheric dispersion in s/m^3

$$H_{th} = 2.78x10^{-4} \sum_i \int_{t1}^{t2} A_i f \frac{x}{Q} V f_a D_i e^{-\lambda_i t} dt$$

in which

H_{th}	=	total, integrated, lifetime dose equivalent commitment to the thyroid (rem)
V	=	breathing rate (m^3/hr)
f_a	=	fraction of inhaled activity reaching the thyroid
D_i	=	dose conversion factor (rad/Ci), quality factor of one assumed for dose equivalent
λ_i	=	decay constant for the ith nuclide (hr^{-1})
t	=	time of plume passage (hr)
t1,t2	=	start and end times of release (hr with $t_{shutdown}$=0)
A_i,f,x/Q		same as defined above.

The following assumptions were made for constants in the above equations:

x/Q	=	0.01
f_a	=	0.3
V	=	1.2
t_1	=	0
t_2	=	1

Calculations for the dose due to noble gasses are shown in Table 5.1. Note that values for 'A' that were not known were assumed to be 5 MeV, a conservative value. The whole body dose equivalent was calculated to be less than 1 mrem. Calculations for the dose due to the radioiodine are shown in Table 5.2. The calculated dose equivalent to the thyroid was 44.5 mrem. All of these calculations have taken no credit for decay.

Table 5.1: Nobel Gas Committed Dose Equivalent Calculation

Isotope	Activity (Ci)	Release (mCi)	E_i (MeV)	H_i (mrem)
^{83m}Kr	31.0	0.465	5.00	0.0063
^{85m}Kr	71.8	1.076	0.44	0.0013
^{85}Kr	1.2	0.018	0.25	0.0000
^{87}Kr	138.0	2.070	2.80	0.0156
^{88}Kr	197.3	2.959	5.00	0.0399
^{89}Kr	242.5	3.638	5.00	0.0491
^{90}Kr	275.5	4.133	5.00	0.0558
^{133m}Xe	9.8	0.146	5.00	0.0020
^{133}Xe	567.8	8.516	0.19	0.0044
^{135m}Xe	149.5	2.243	5.00	0.0303
^{135}Xe	256.3	3.844	0.62	0.0064
			H Total	0.4841

Table 5.2: Iodine Lifetime Committed Dose Equivalent to the Thyroid Calculation

Isotope	$t_{1/2}$	Unit	λ (hr^{-1})	Activity (Ci)	Release (mCi)	D_i (rad/Ci)	H_{thi} (mrem)
^{131}I	8.1	d	0.0036	270	4.05	$6.3x10^6$	25.49
^{132}I	2.3	h	0.3014	416	6.23	$2.3x10^5$	1.24
^{133}I	20.3	h	0.0341	483	7.25	$1.8x10^6$	12.83
^{134}I	0.9	h	0.7702	636	9.54	$1.1x10^5$	0.73
^{135}I	6.7	h	0.1035	553	8.30	$5.4x10^5$	4.26
						H_{th} Total	44.55

Along with the highly volatile nuclides, other fission products will be released. The most significant of these with respect to biological hazards are radiocesium and radiostrontium. For the MUTR after one year of continuous, full power operation, there will be 1361 Ci of radiostrontium and 647 Ci of radiocesium in the central element. The release fraction for non-gaseous radionuclides from TRIGA fuel is not well established. A value of 10^{-6} was assumed which results in 1.4 mCi of radiostrontium and 0.6 mCi of radiocesium being released from the damaged fuel element. The air concentration that would result from this release is given by

$$C_i = 2.78x10^{-4} \int_{t_i}^{t_2} A_i f \frac{x}{Q} e^{-\lambda_i t} dt$$

in which the variables have the same definitions as given previously. Calculations of the air concentrations and the resultant the uptake into a person are presented in Table 5.3. Table 5.3 also compares the uptake to the ALI given in 10 CFR 20 Appendix B. All the isotopes for which ALI's are provided have an uptake in the general public at least 10^5 below levels given in Appendix B which represents an annual dose <0.05 mrem or a lifetime committed dose <0.5 mrem for each isotope.

Table 5.3: Radiocesium and Radiostrontium Uptake vs. ALI Limits

Isotope	$t_{1/2}$	Unit	Activity (Ci)	Release (mCi)	C_i (Ci/m^3)	Uptake (μCi)	ALI Ratio
^{89}Sr	52.7	d	250.0	0.250	$6.9x10^{-10}$	$8.5x10^{-4}$	$1.2x10^5$
^{90}Sr	27.7	y	7.8	0.008	$2.2x10^{-11}$	$2.5x10^{-5}$	$1.6x10^5$
^{91}Sr	9.7	h	323	0.323	$8.7x10^{-10}$	$1.0x10^{-3}$	$3.9x10^6$
^{92}Sr	2.7	h	365.5	0.366	$9.0x10^{-10}$	$1.1x10^{-3}$	$6.5x10^6$
^{93}Sr	8.3	m	414.5	0.415	$2.3x10^{-10}$	$2.7x10^{-4}$	
^{134m}Cs	2.1	y	0.5	0.001	$1.3x10^{-12}$	$1.5x10^{-6}$	$6.6x10^{10}$
^{134}Cs	2.9	h	0.8	0.001	$1.9x10^{-12}$	$2.2x10^{-6}$	$4.5x10^7$
^{136}Cs	13.7	d	6.5	0.007	$1.8x10^{-11}$	$2.2x10^{-5}$	$3.2x10^7$
^{137}Cs	30	y	124.0	0.124	$3.4x10^{-10}$	$4.2x10^{-4}$	$4.8x10^5$
^{138}Cs	32.2	m	515.0	0.515	$8.0x10^{-10}$	$9.7x10^{-4}$	$6.2x10^7$

6.0 UNAVIODABLE EFFECTS OF FACILITY CONSTRUCTION AND OPERATION

The unavoidable effects of construction and operation involve materials used in construction that cannot be recovered and the fissionable material used in the reactor. No adverse impact on the environment has occurred from either of these unavoidable effects.

7.0 ALTERNATIVES TO CONSTRUCTION AND OPERATION OF THE FACILITY

To accomplish the objectives associated with research reactors, there are no suitable alternatives. Some of these objectives are the training of students in the operation of reactors, production of radioisotopes, and the use of neutrons and gamma rays to conduct experiments.

8.0 LONG-TERM EFFECTS OF FACILITY CONSTRUCTION AND OPERATION

The long-term effects of research facilities are considered beneficial because of the contribution to scientific knowledge and training.

Because of the relatively low amount of capital resources involved and the small impact on the environment, very little in the way of irreversible and irretrievable commitment is associated with the MUTR facility.

9.0 COST AND BENEFITS OF FACILITY AND ALTERNATIVES

The cost for a facility such as the MUTR is about $2 million with very little environmental impact. The benefits include, but are not limited to activation analysis, training and education of student engineers, production of radioisotopes for research, and the education of the public at large. Some of these activities could be conducted using particle accelerators or other radioactive sources, but neither of those are capable of performing all the tasks that a research reactor is capable of. There is no reasonable alternative to a nuclear reactor of the type presently used at the University of Maryland.