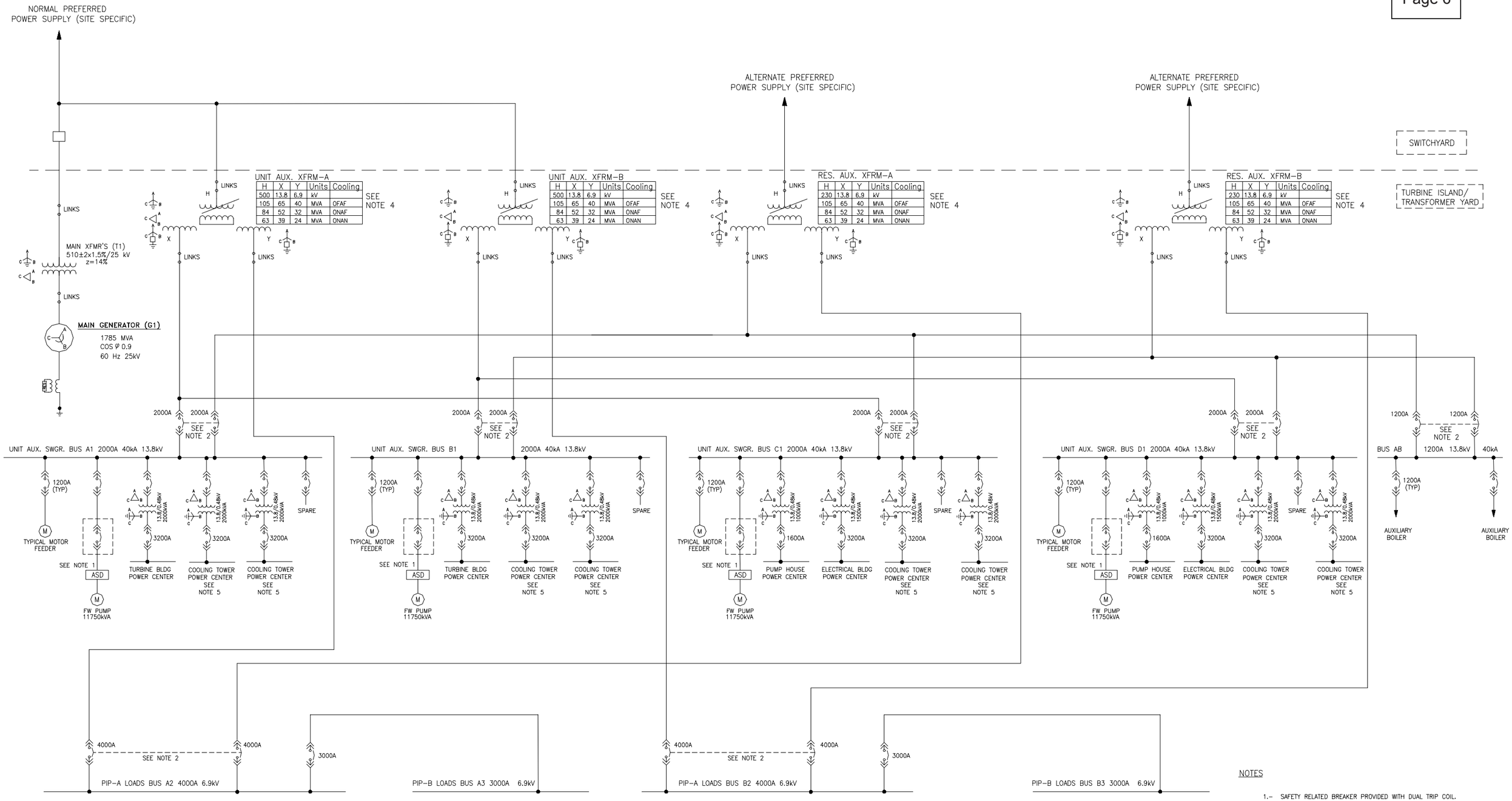

NOTES

1.– SAFETY RELATED BREAKER PROVIDED WITH DUAL TRIP COIL.

2.– THE BREAKERS SHALL BE ELECTRICALLY INTERLOCKED SO THAT ONLY ONE CAN BE CLOSED AT ANY TIME. BREAKERS ARE CLOSED WHEN A FAST TRANSFER OCCURS.

3.– THE SYMBOL ⬡ DENOTES AN ELECTRICAL CONNECTION BETWEEN HEXAGON BEARING THE SAME NUMBER.

4.– PRIMARY WINDING VOLTAGE OF UAT AND RAT ARE SITE SPECIFIC.

5.– COOLING TOWER POWER CENTERS ARE SITE SPECIFIC AND MAY BE ADJUSTED AS NECESSARY.

EPDS One Line Sh 1

imagination at work

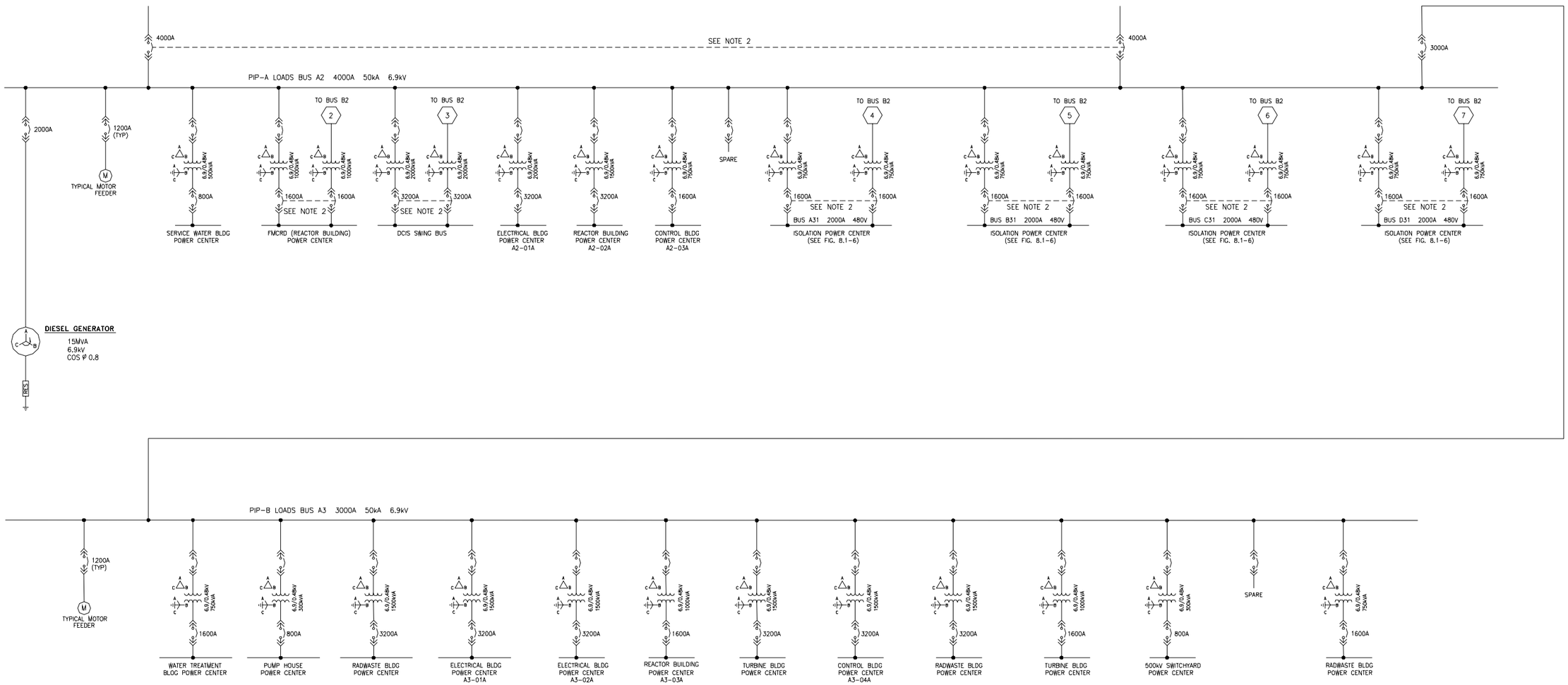

EPDS One Line Sh 2

imagination at work

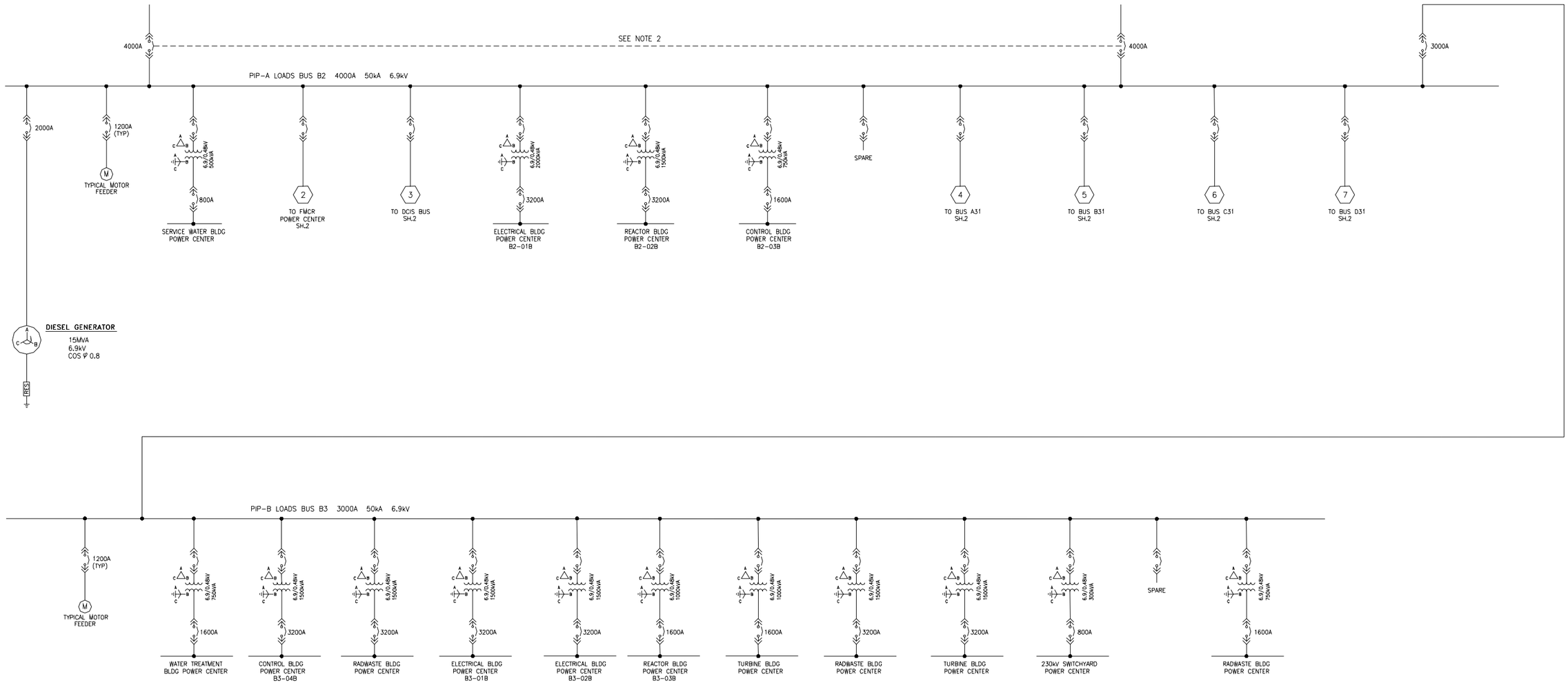

imagination at work

EPDS One Line Sh 3

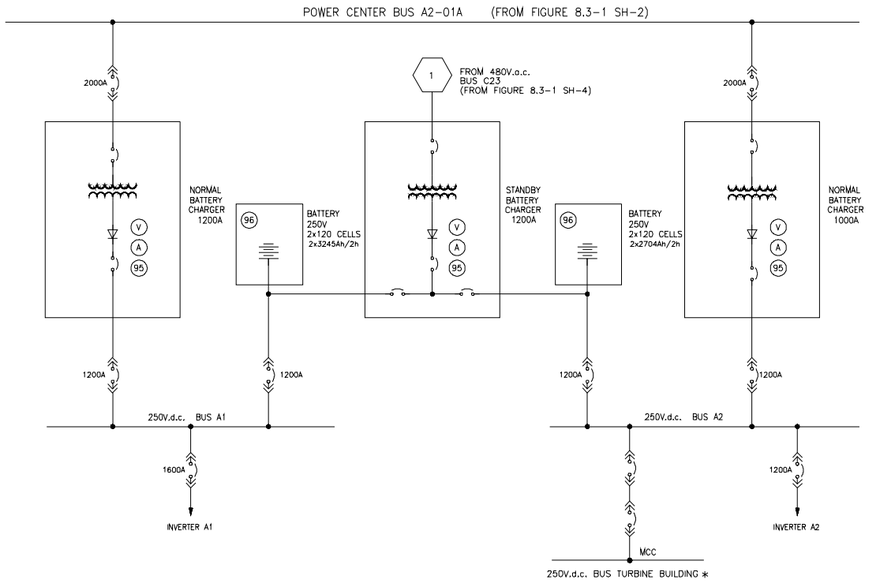

NON-CLASS 1E 250V.d.c. POWER SYSTEM

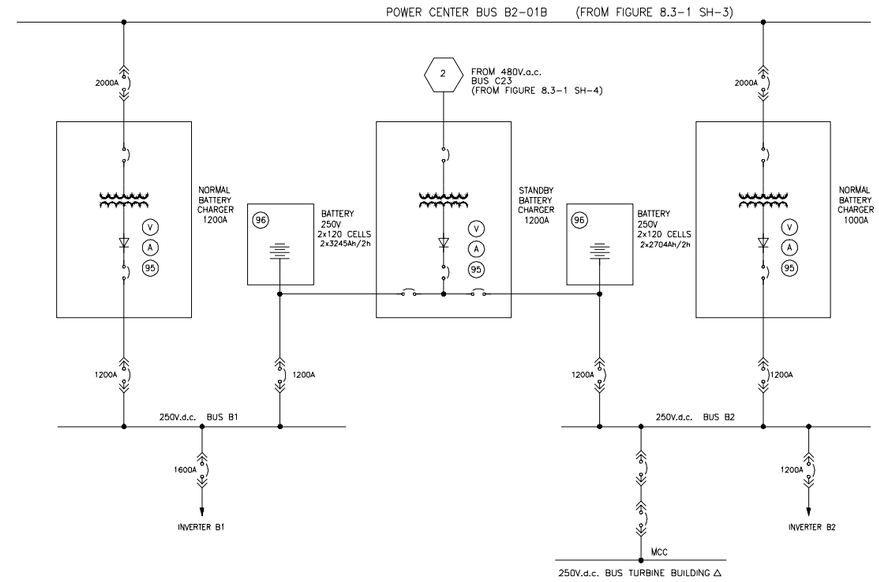

NON-CLASS 1E 250V.d.c. POWER SYSTEM

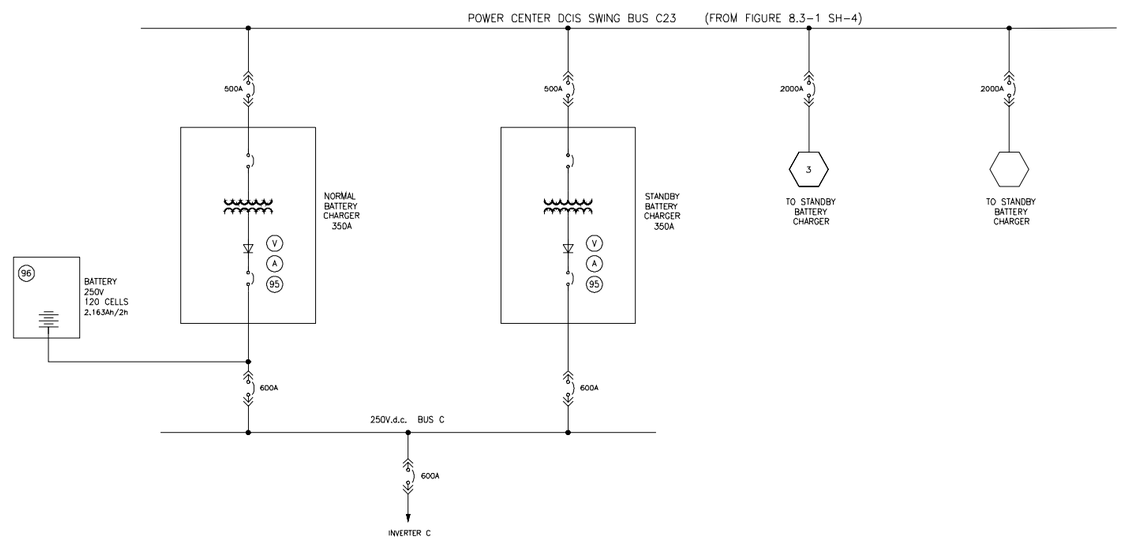

* -A FW MOTOR EMERGENCY OIL PUMP.
-C FW MOTOR EMERGENCY OIL PUMP.
Δ -B FW MOTOR EMERGENCY OIL PUMP.
^ ^Y MOTOR EMERGENCY OIL PUMP.

Non-Class 1E 250 VDC Power System

imagination at work

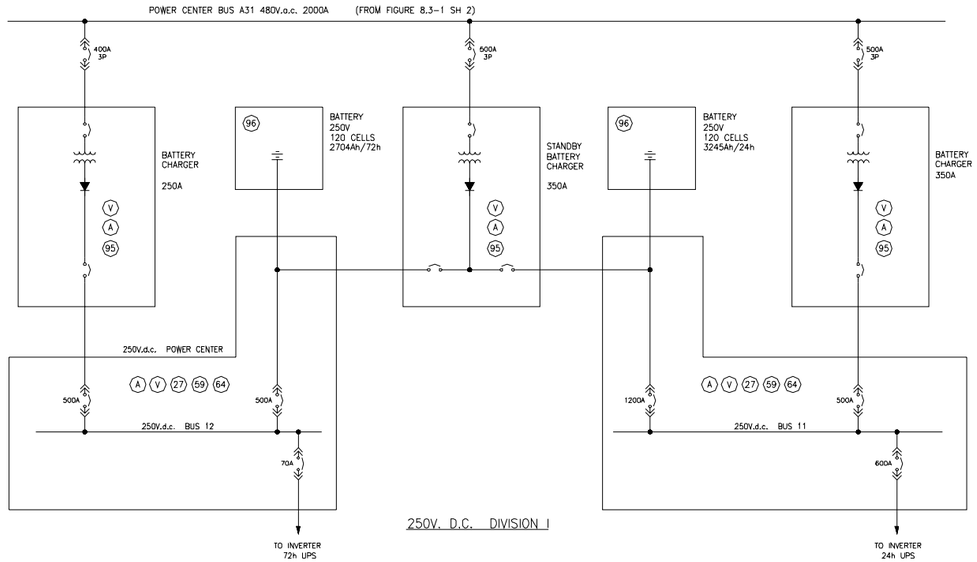

250V. D.C. DIVISION I

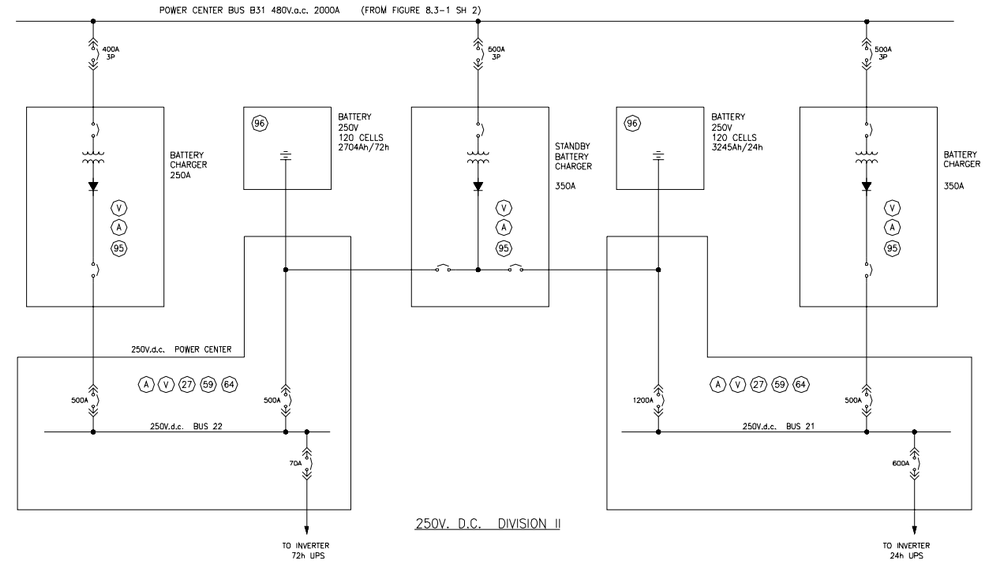

250V. D.C. DIVISION II

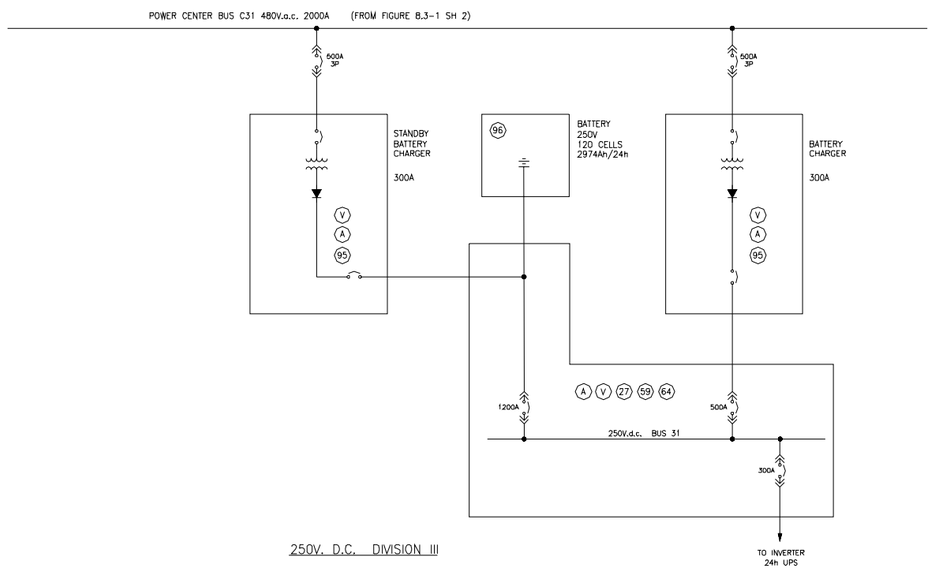

250V. D.C. DIVISION III

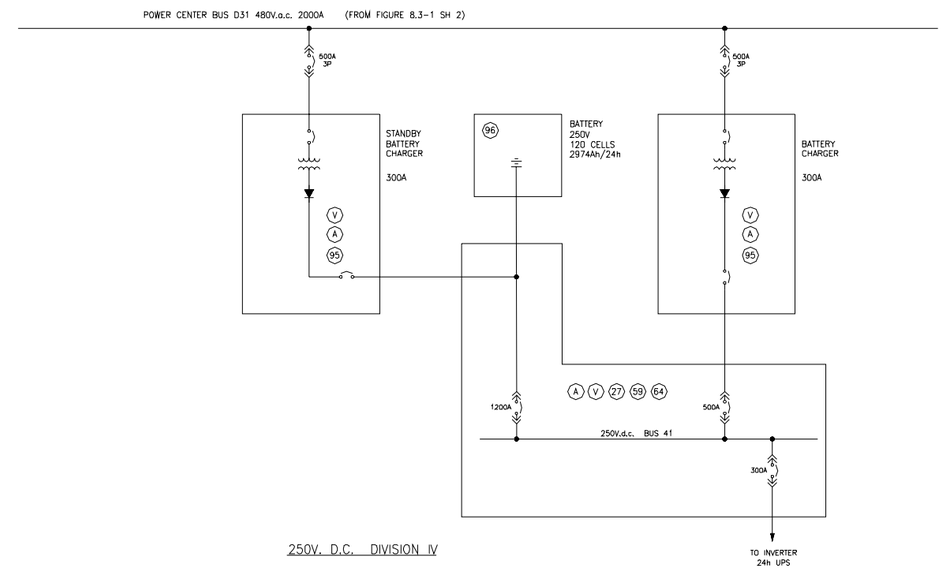

250V. D.C. DIVISION IV

imagination at work

Class 1E 250 VDC Power System

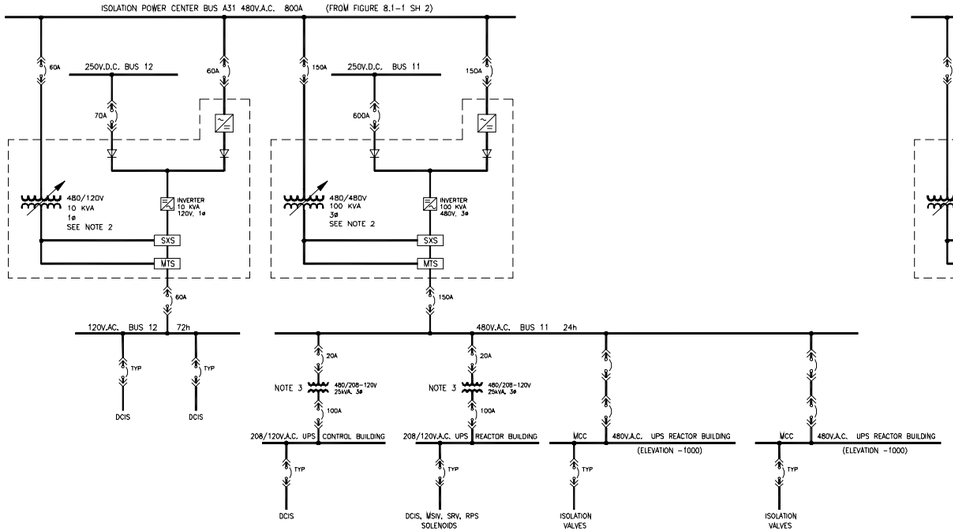

CLASS 1E UNINTERRUPTIBLE POWER SUPPLY DIVISION I

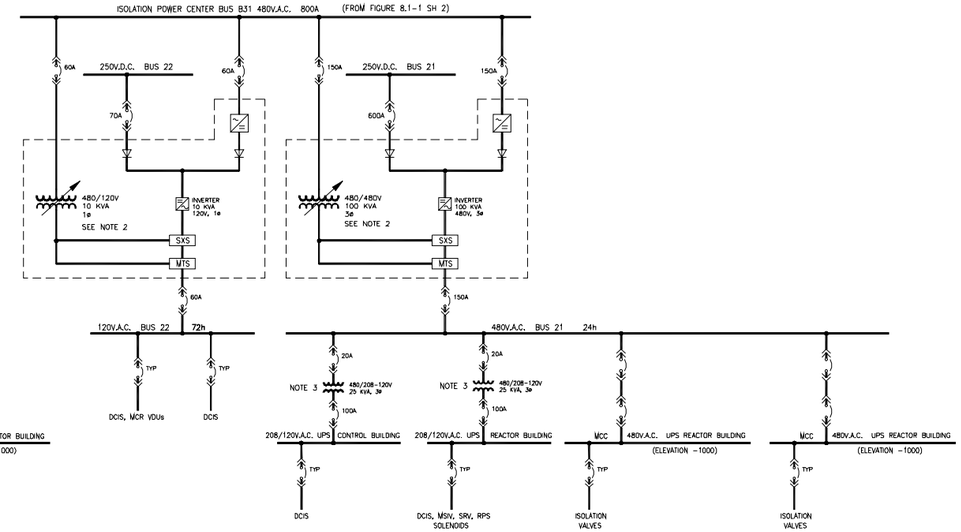

CLASS 1E UNINTERRUPTIBLE POWER SUPPLY DIVISION II

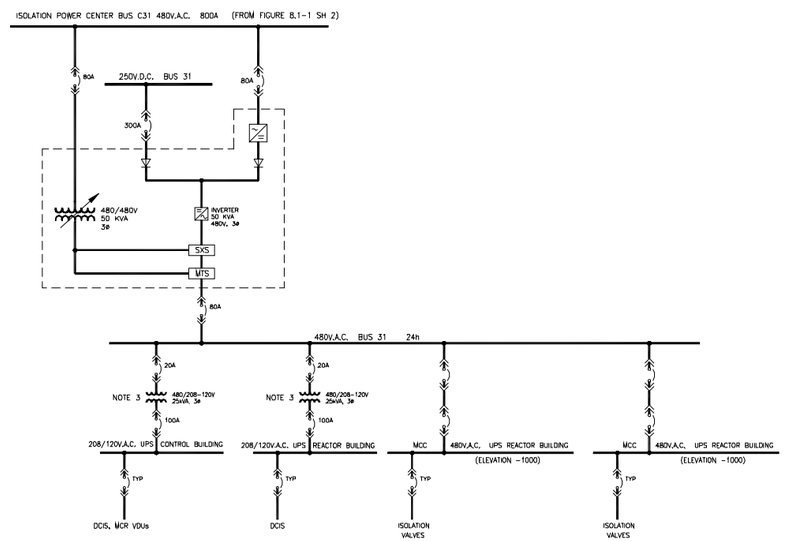

CLASS 1E UNINTERRUPTIBLE POWER SUPPLY DIVISION III

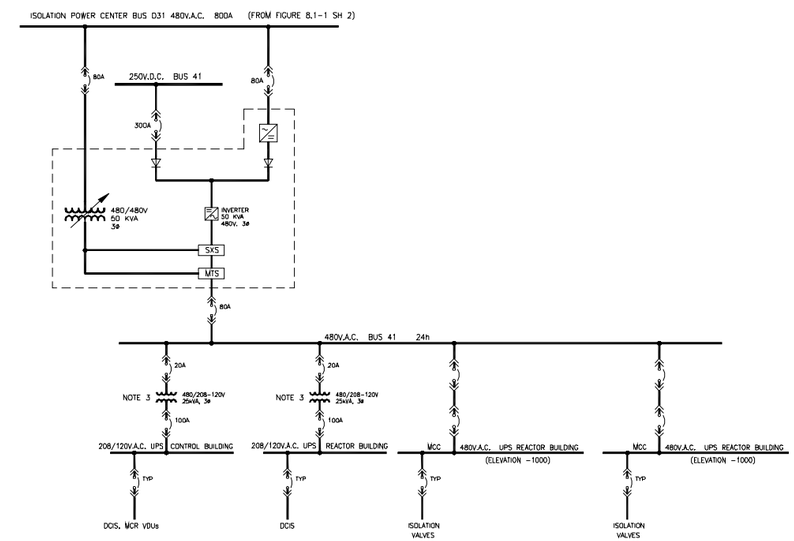

CLASS 1E UNINTERRUPTIBLE POWER SUPPLY DIVISION IV

DEVICE LEGEND

SXS: STATIC XFER SWITCH
MTS: MAINTENANCE SWITCH

NOTES:

1- THE LOAD BREAKER FRAME AND THE BREAKER FRAME OF THE ISOLATION VALVES PANEL ARE PENDING.

2- REGULATING TRANSFORMERS ARE CLASS 1E BUT DO NOT PERFORM ANY SAFETY FUNCTION.

3- POWER SUPPLY TO I & C LOADS OF THE R14 SYSTEM. THIS SYSTEM IS SUPPLIED FROM BOTH THE A.C. SYSTEM FROM THE BATTERIES VIA VIA THE UNINTERRUPTIBLE POWER SYSTEM.

Class 1E UPS Power System

imagination at work

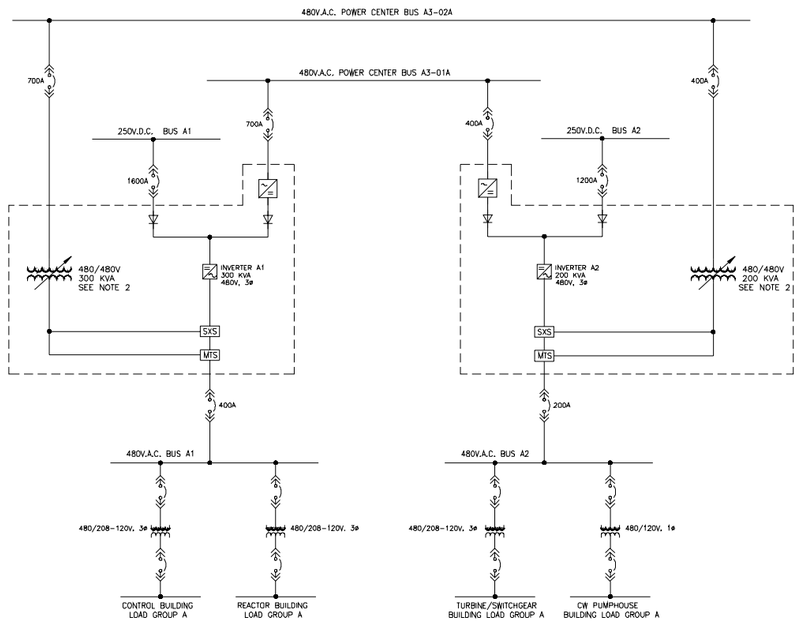

NON CLASS 1E UNINTERRUPTIBLE POWER SUPPLY

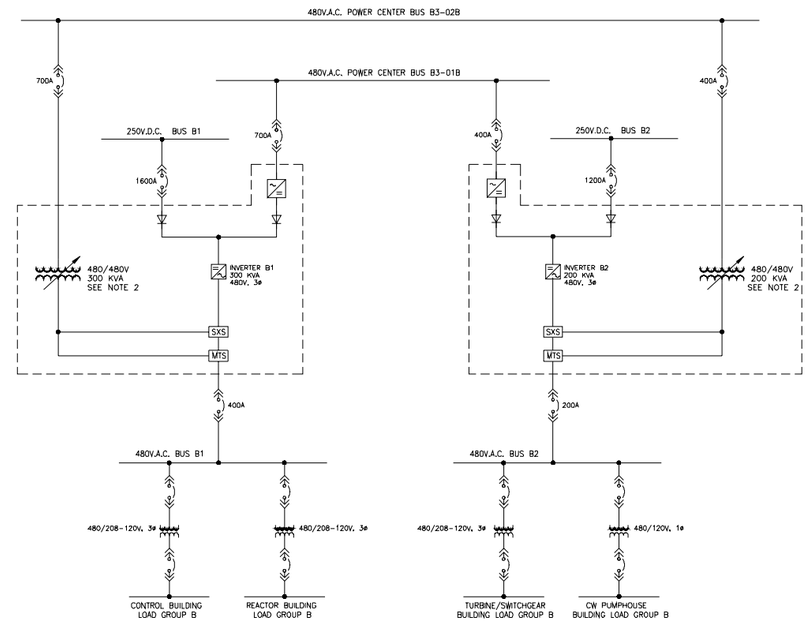

NON CLASS 1E UNINTERRUPTIBLE POWER SUPPLY

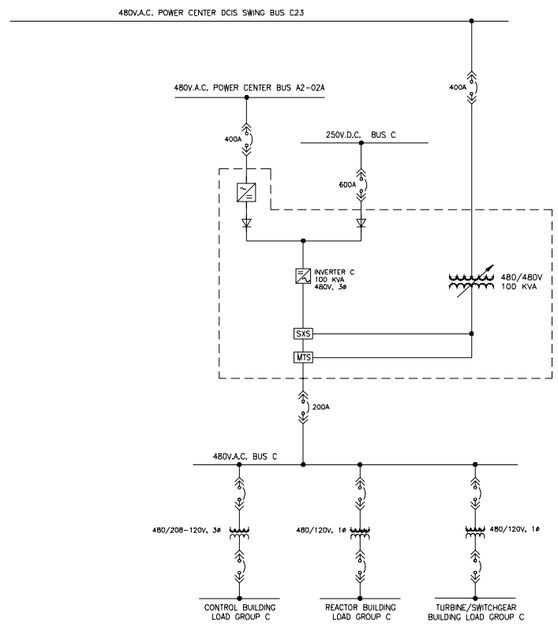

NON CLASS 1E UNINTERRUPTIBLE POWER SUPPLY

Non-Class 1E UPS Power System

imagination at work

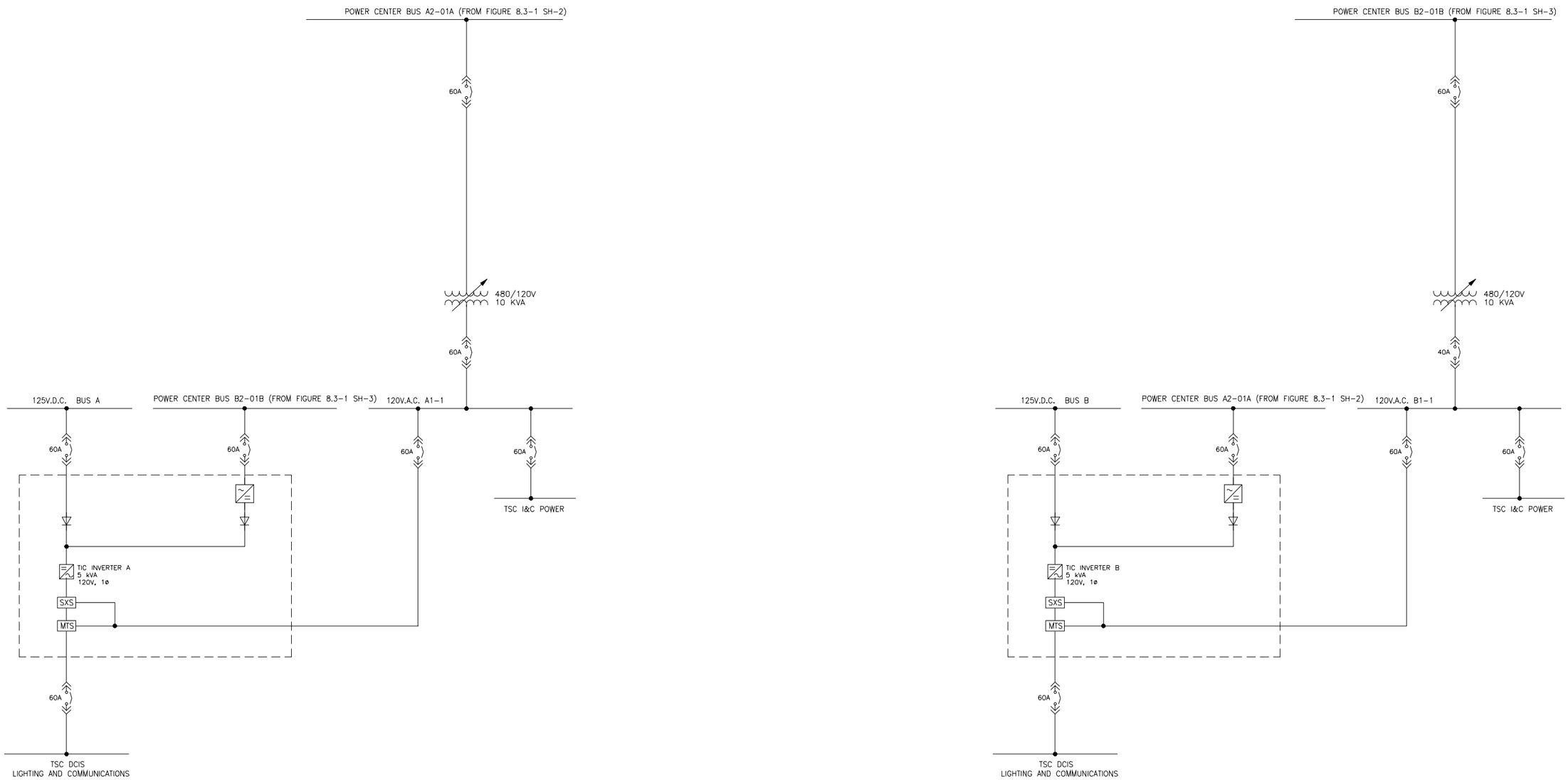

NON CLASS 1E UNINTERRUPTIBLE TSC SYSTEM

Non Class 1E UPS TSC Power System

imagination at work

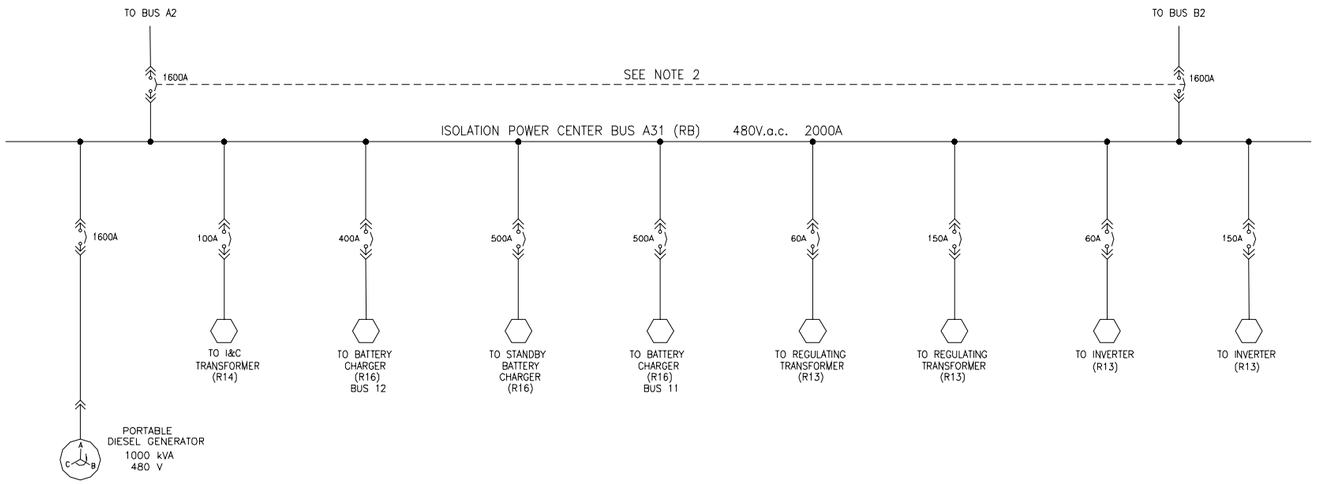

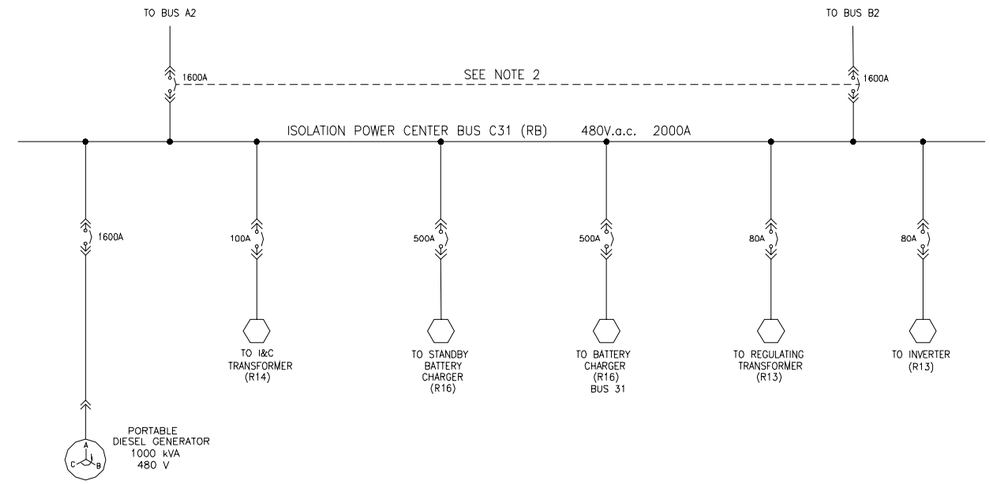

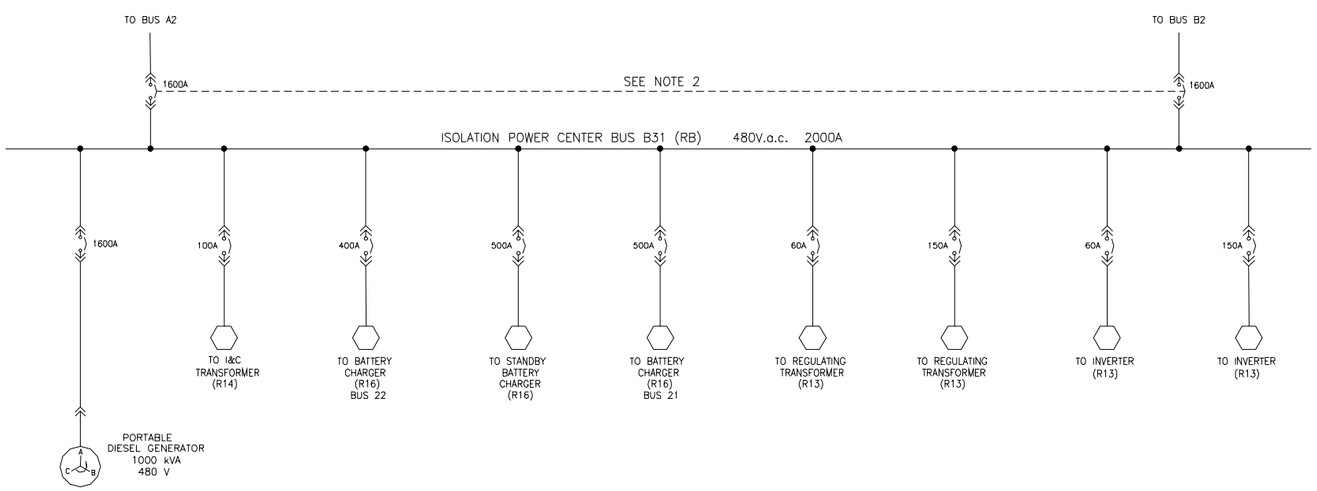

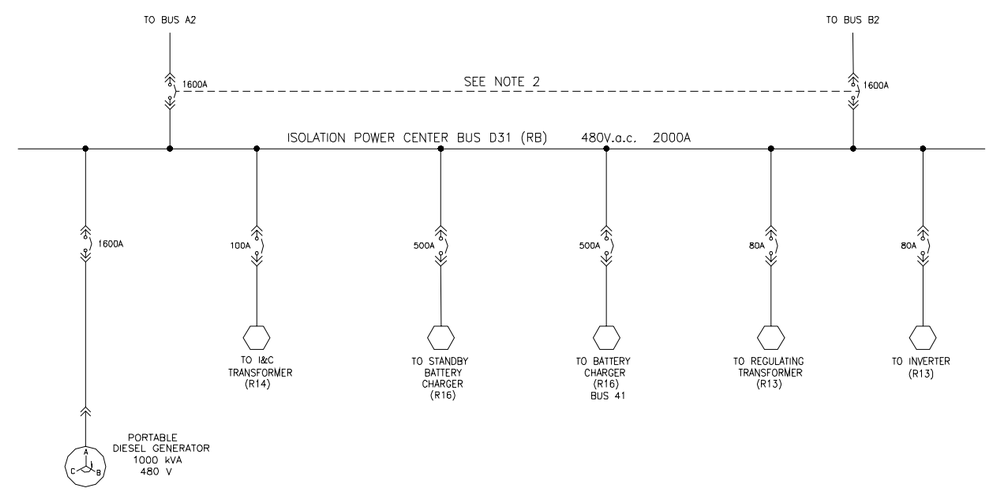

480 VAC Power System (Typical)

NOTES

2.- THE BREAKERS SHALL BE ELECTRICALLY INTERLOCKED SO THAT ONLY ONE CAN BE CLOSED AT ANY TIME NEVERTHELESS THE TWO BOTH INCOMING CIRCUIT. BREAKERS COULD BE CLOSED WHEN A FAST TRANSFER OCCURS.

imagination at work