Attachment 7

NEI 99-02 Appendix G, MSPI Basis Document Development

To implement the Mitigating Systems Performance Index (MSPI), Licensees will develop a plant specific basis document that documents the information and assumptions used to calculate the Reactor Oversight Program (ROP) MSPI. This basis document is necessary to support the NRC inspection process, and to record the assumptions and data used in developing the MSPI on each site. A summary of any changes to the basis document are noted in the comment section of the quarterly data submission to the NRC.

The Basis document will have two major sections. The first described below will document the information used in developing the MSPI. The second section will document the conformance of the plant specific PRA to the requirements that are outlined in this appendix.

I. MSPI Data

The basis document provides a separate section for each monitored system as defined in Section 2.2 of NEI 99-02. The section for each monitored system contains the following subsections:

A. System Boundaries

This section contains a description of the boundaries for each train of the monitored system. A plant drawing or figure (training type figure) should be included and marked adequately (i.e., highlighted trains) to show the boundaries. The guidance for determining the boundaries is provided in Appendix F, Section 1.1 of NEI 99-02.

B. Risk Significant Functions

This section lists the risk significant functions for each train of the monitored system. Risk Significant Functions are defined in section 2.2 of NEI 99-02. Additional detail is given in Appendix F, Section 2.1.1 and Section 5 "Additional Guidance for Specific Systems". A single list for the system may be used as long as any differences between trains are clearly identified. This section may also be combined with the section on Success Criteria if a combination of information into a table format is desired.

C. Success Criteria

This section documents the success criteria as defined in Section 2.2 of NEI 99-02 for each of the identified risk significant functions identified for the system. Additional detail is given in Appendix F, Section 2.1.1. The criteria used should be the documented PRA success criteria. If the licensee has chosen to use design basis success criteria in the PRA, it is not required to separately document them other than to indicate that is what was used. Where there are different success criteria for different functions or initiators, all should be recorded and the most restrictive shown as the one used.

D. Mission Time

This section documents the risk significant mission time as defined in Section 2.3.4 of NEI 99-02 for each of the identified risk significant functions identified for the system.

E. Monitored Components

This section documents the selection of monitored components as defined in Appendix F, Section 2.1.2 of NEI 99-02 in each train of the monitored system. A listing of all monitored pumps, breakers and EDG's should be included in this section. A listing of AOVs, HOVs , SOVs and MOVs that change state to achieve the risk significant functions should be

provided as potential monitored components. The basis for excluding valves in this list from monitoring should be provided. Component boundaries as described in Appendix F, Section 2.1.3 of NEI 99-02 should be included where appropriate.

F. Basis for Demands/Run Hours (estimate or actual)

The determination of reliability largely relies on the values of demands, run hours and failures of components to develop a failure rate. This section documents how the licensee will determine the demands on a component. Several methods may be used.

- Actual counting of demands/run hours during the reporting period
- An estimate of demands/run hours based on the number of times a procedure or other activities is performed plus actual ESF demands/run hours
- An estimate based on historical data over a year or more averaged for a quarterly average plus actual ESF demands/run hours

The method used is described and the basis information documented.

G. Short Duration Unavailability

This section provides a list of any periodic surveillances or evolutions of less than 15 minutes of unavailability that the licensee does not include in train unavailability. The intent is to minimize unnecessary burden of data collection, documentation, and verification because these short durations have insignificant risk impact.

H. PRA Information used in the MSPI

1. Unavailability FV and UA

This section includes a table or spreadsheet that lists the basic events for unavailability for each train of the monitored systems. This listing should include the probability, FV, and FV/probability ratio and text description of the basic event or component ID. An example format is provided as Table 1 at the end of this appendix.

a) Unavailability Baseline Data

This section includes the baseline unavailability data by train for each monitored system. The discussion should include the basis for the baseline values used. The detailed basis for the baseline data may be included in an appendix to the MSPI Basis Document if desired.

b) Treatment of Support System Initiator(s)

This section documents whether the cooling water systems are an initiator or not. This section provides a description of how the plant will include the support system initiator(s) as described in Appendix F of NEI 99-02. If an analysis is performed for a plant specific value, the calculation must be documented in accordance with plant processes and referred to here. The results should also be included in this section. A sample table format for presenting the results of a plant specific calculation for those plants that do not explicitly model the effect on the initiating event contribution to risk is shown in Table 3 at the end of this appendix.

2. Unreliability FV and UR

This section includes a table or spreadsheet that lists the basic events for component failures for each monitored component. This listing should include the probability, FV, the common cause adjustment factor and FV/probability ratio and text description of the basic event or component ID. An example format is provided as Table 2 at the end of

this appendix. If individual failure mode ratios (vice the maximum ratio) will be used in calculation of MSPI then all columns of the applicable rows should be completed. As an example, if failure to run and failure to start values will both be used for cooling water system pumps, then the rows for the values used as CDE inputs should be completed.

a) **Treatment of Support System Initiator(s)**
This section documents whether the cooling water systems are an initiator or not. This section provides a description of how the plant will include the support system initiator(s) as described in Appendix F of NEI 99-02. If an analysis is performed for a plant specific value, the calculation must be documented in accordance with plant processes and referred to here. The results should also be included in this section. A sample table format for presenting the results of a plant specific calculation for those plants that do not explicitly model the effect on the initiating event contribution to risk is shown in Table 3 at the end of this appendix.

b) **Calculation of Common Cause Factor**
This section contains the description of how the plant will determine the common cause factor as described in Appendix F of NEI 99-02. If an analysis is performed for a plant specific value, the calculation must be documented in accordance with plant processes and referred to here. The results should also be included in this section.

I. Assumptions

This section documents any specific assumptions made in determination of the MSPI information that may need to be documented. Causes for documentation in this section could be special methods of counting hours or runtimes based on plant specific designs or processes, or other instances not clearly covered by the guidance in NEI 99-02.

II. PRA REQUIREMENTS

Discussion

The MSPI application can be considered a Phase 2 application under the NRC's phased approach to PRA quality. The MSPI is an index that is based on an internal initiating events, full-power PRA, for which the ASME Standard has been written. The Standard has been endorsed by the staff in RG 1.200, which has been issued for trial use.

Licensees should assure that their PRA is of sufficient technical adequacy to support the MSPI application by one of the following alternatives:

Alternative A (Consistent with MSPI PRA Task Group recommendations)

a) Resolve the peer review Facts and Observations (F&Os) for the plant PRA that are classified as being in category A or B, or document the basis for a determination that any open A or B F&Os will not significantly impact the MSPI calculation. Open A or B F&Os are significant if collectively their resolution impacts any Birnbaum values used in MSPI by more than a factor of 3. Appropriate sensitivity studies may be performed to quantify the impact. If an open A or B F&O cannot be resolved by January 1, 2006 and significantly impacts the MSPI calculation, a modified Birnbaum value equal to a factor of 3 times the median Birnbaum value from the associated cross comparison group for the component should be used in the MSPI calculation until the F&O is resolved.

And

b) Perform a self assessment using the NEI-00-02 process as modified by Appendix B of RG 1.200 for the ASME PRA Standard supporting level requirements identified by the MSPI PRA task group and resolve any identified issues or document the basis for a determination that any open issues will not significantly impact the MSPI calculation. Identified issues are considered significant if they impact any Birnbaum values used in MSPI by more than a factor of 3. Appropriate sensitivity studies may be performed to quantify the impact. If an identified issue cannot be resolved by January 1, 2006 and significantly impacts the MSPI calculation, a modified Birnbaum value equal to a factor of 3 times the median Birnbaum value from the associated cross comparison group for the component should be used in the MSPI calculation until the issue is resolved.

Alternative B (Consistent with RG 1.174 guidance)

a) Resolve the peer review F&Os for the plant PRA that are classified as being in category A or B, or document the basis for a determination that any open A or B F&Os will not significantly impact the MSPI calculation. Open A or B F&Os are significant if collectively their resolution impacts any Birnbaum values used in MSPI by more than a factor of 3. Appropriate sensitivity studies may be performed to quantify the impact. If an open A or B F&O cannot be resolved by January 1, 2006 and significantly impacts the MSPI calculation, a modified Birnbaum value equal to a factor of 3 times the median Birnbaum value from the associated cross comparison group for the component should be used in the MSPI calculation until the F&O is resolved.

And

b) Disposition any candidate outlier issues identified by the industry PRA cross comparison activity. The disposition of candidate outlier issues can be accomplished by:

- Correcting or updating the PRA model;
- Demonstrating that outlier identification was due to valid design or PRA modeling methods; or
- Using a modified Birnbaum value equal to a factor of 3 times the median value from the associated cross comparison group for the outlier until the PRA model is corrected or updated.

PRA MSPI Documentation Requirements

A. Licensees should provide a summary of their PRA models to include the following:

1. Approved version and date used to develop MSPI data
2. Plant base CDF for MSPI
3. Truncation level used to develop MSPI data

B. Licensees should document the technical adequacy of their PRA models, including:

1. Justification for any open category A or B F&Os that will not be resolved prior to December 31, 2005.
2. Justification for any open issues from:
   a. the self-assessment performed for the supporting requirements (SR) identified in Table 4, taking into consideration Appendix B of RG 1.200 (trial), with particular attention to the notes in Table 4 of the MSPI PRA task group report.

      - OR -

   b. identification of any candidate outliers for the plant from the industry owners group cross-comparison.

C. Licensees should document in their PRA archival documentation:

1. A description of the resolution of the A and B category F&Os identified by the peer review team.

2. Technical bases for the PRA.

III. TABLES

Table 1 Unavailability Data HPSI (one table per system)

Train	Basic Event Name	Basic Event Description	Basic Event Probability (UAP)	Basic Event FVUAP [1]	FVUAP/UAP
A	1SIAP02----MP6CM	HPSI Pump A Unavailable Due to Mntc	3.20E-03	3.19E-03	9.97E-01
B	1SIBP02----MP6CM	HPSI Pump B Unavailable Due to Mntc	3.20E-03	3.85E-03	1.20E+00

1. Adjusted for IEF correction if used

Table 2 Unreliability Data (one table per monitored component)
Component Name and ID: HPSI Pump B - 1SIBP02

Basic Event Name	Basic Event Description	Basic Event Probability (URPC)	Basic Event FVURC [1]	[FV/UR]*ind*	Common Cause Adjustment Factor (CCF)	Common Cause Adjustment Generic or Plant Specific	(FVURC/URPC) *CCF
1SIBP02---XCYXOR	HPSI Pump B Fails to Start Due to Override Contact Failure	6.81E-04	7.71E-04	1.13E+00	3.0	Generic	3.39
1SIBP02----MPAFS	HPSI Pump B Fails to Start (Local Fault)	6.73E-04	7.62E-04	1.13E+00			
1SIBP02----MP-FR	HPSI Pump B Fails to Run	4.80E-04	5.33E-04	1.11E+00			
1SABHP-K125RXAFT	HPSI Pump B Fails to Start Due to K125 Failure	3.27E-04	3.56E-04	1.09E+00			
1SIBP02----CB0CM	HPSI Pump B Circuit Breaker (PBB-S04E) Unavailable Due to Mntc	2.20E-04	2.32E-04	1.05E+00			
1SIBP02----CBBFT	HPSI Pump B Circuit Breaker (PBB-S04E) Fails to Close (Local Fault)	2.04E-04	2.14E-04	1.05E+00			

1. Adjusted for IEF correction if used

Table 3 Cooling Water Support System FV Calculation Results (one table per train/component/failure mode)

FV*a (or FVc)*	FV*ie*	FV*sa (orFVsc)*	UA (or UR)	Calculated FV (per appendix F) *(result is put in Basic Event column of table 1 or table 2 as appropriate)*

TABLE 4. ASME PRA Standard Supporting Requirements Requiring Self-Assessment

Supporting Requirement	Comments
IE-A4	Focus on plant specific initiators and special initiators, especially loss of DC bus, Loss of AC bus, or Loss of room cooling type initiators
IE-A7	Category I in general. However, precursors to losses of cooling water systems in particular, e.g., from fouling of intake structures, may indicate potential failure mechanisms to be taken into account in the system analysis (IE-C6, 7, 8, 9)
IE-A9	Category II for plants that choose fault trees to model support systems. Watch for initiating event frequencies that are substantially (e.g., more than 3 times) below generic values.
IE-C1	Focus on loss of offsite power (LOOP) frequency as a function of duration
IE-C2	Focus on LOOP and medium and small LOCA frequencies including stuck open PORVs
IE-C6	For plants that choose fault trees for support systems, attention to loss of cooling systems initiators.
IE-C9	Category II for plants that choose fault trees for support systems. Pay attention to initiating event frequencies that are substantially (i.e., more than 3 times) below generic values
AS-A3	Focus on credit for alternate sources, e.g., gas turbines, CRD, fire water, SW cross-tie, recovery of FW
AS-A4	Focus on credit for alternate sources, e.g., gas turbines, CRD, fire water, SW cross-tie, recovery of FW
AS-A5	Focus on credit for alternate sources, e.g., gas turbines, CRD, fire water, SW cross-tie, recovery of FW
AS-A9	Category II for MSPI systems and components and for systems such as CRD, fire water, SW cross-tie, recovery of FW
AS-A10	Category II in particular for alternate systems where the operator actions may be significantly different, e.g., more complex, more time limited.
AS-B3	Focus on credit for injection post-venting (NPSH issues, environmental survivability, etc.)
AS-B6	Focus on (a) time phasing in LOOP/SBO sequences, including battery depletion, and (c) adequacy of CRD as an adequate injection source.
SC-A4	Focus on modeling of shared systems and cross-ties in multi-unit sites
SC-B1	Focus on proper application of the computer codes for T/H calculations, especially for LOCA, IORV, SORV, and F&B scenarios.
SC-C1	Category II

TABLE 4. ASME PRA Standard Supporting Requirements Requiring Self-Assessment

Supporting Requirement	Comments
SY-A4	Category II for MSPI systems and components
SY-A11	Focus on (d) modeling of shared systems
SY-A20	Focus on credit for alternate injection systems, alternate seal cooling
SY-B1	Should include EDG, AFW, HPI, RHR CCFs
SY-B5	Focus on dependencies of support systems (especially cooling water systems) to the initiating events
SY-B9	Focus on credit for injection post-venting (NPSH issues, environmental survivability, etc.)
SY-B15	Focus on credit for injection post-venting (NPSH issues, environmental survivability, etc.)
HR-E1	Focus on credit for cross ties, depressurization, use of alternate sources, venting, core cooling recovery, initiation of F&B
HR-E2	Focus on credit for cross ties, depressurization, use of alternate sources, venting, core cooling recovery, initiation of F&B
HR-G1	Category II , though Category I for the critical HEPs would produce a more sensitive MSPI (i.e., fewer failures to change a color)
HR-G2	Focus on credit for cross ties, depressurization, use of alternate sources, venting, core cooling recovery, initiation of F&B
HR-G3	Category I See note on HR-G1. Attention to credit for cross ties, depressurization, use of alternate sources, venting, core cooling recovery, initiation of F&B
HR-G5	Category II See note on HR-G1.
HR-H2	Focus on credit for cross ties, depressurization, use of alternate sources, venting, core cooling recovery, initiation of F&B
HR-H3	The use of some systems may be treated as a recovery action in a PRA, even though the system may be addressed in the same procedure as a human action modeled in the accident sequence model (e.g., recovery of feedwater may be addressed in the same procedure as feed and bleed). Neglecting the cognitive dependency can significantly decrease the significance of the sequence.
DA-B1	Focus on service condition (clean vs untreated water) for SW systems
DA-C1	Focus on LOOP recovery
DA-C15	Focus on recovery from LOSP and loss of SW events
DA-D1	For BWRs with isolation condenser, focus on the likelihood of a stuck open SRV

TABLE 4. ASME PRA Standard Supporting Requirements Requiring Self-Assessment

Supporting Requirement	Comments
QU-B2	Truncation limits should be chosen to be appropriate for F-V calculations. Based on sensitivity cases performed by the Office of Research the task group recommends that truncation limits be 5 to 6 orders of magnitude smaller than the base CDF.
QU-B3	This is an MSPI implementation concern and should be addressed in the guidance document. Truncation limits should be chosen to be appropriate for F-V calculations. Based on sensitivity cases performed by the Office of Research the task group recommends that truncation limits be 5 to 6 orders of magnitude smaller than the base CDF.
QU-D3	Understanding the differences between plant models, particularly as they affect the MSPI, is important for the proposed approach to the identification of outliers recommended by the task group.
QU-D5	Category II for those who have used fault tree models to address support system initiators.
QU-E4	Category II for the issues that directly affect the MSPI

APPENDIX F

METHODOLOGIES FOR COMPUTING THE UNAVAILABILITY INDEX, THE UNRELIABILITY INDEX AND COMPONENT PERFORMANCE LIMITS

This appendix provides the details of three calculations: the System Unavailability Index, the System Unreliability Index, and component performance limits.

1. System Unavailability Index (UAI) Due to Train Unavailability

Unavailability is monitored at the train level for the purpose of calculating UAI. The process for calculation of the System Unavailability Index has three major steps:

- Identification of system trains
- Collection of plant data
- Calculation of UAI

The first of these steps is performed for the initial setup of the index calculation (and if there are significant changes to plant configuration). The second step has some parts that are performed initially and then only performed again when a revision to the plant specific PRA is made or changes are made to the normal preventive maintenance practices. Other parts of the calculation are performed periodically to obtain the data elements reported to the NRC. This section provides the detailed guidance for the calculation of UAI.

1.1. Identification of System Trains

The identification of system trains is accomplished in two steps:

- Determine the system boundaries
- Identify the trains within the system

The use of simplified P&IDs can be used to document the results of this step and will also facilitate the completion of the directions in section 2.1.1 later in this document.

1.1.1. System Boundaries

The first step in the identification of system trains is to define the system boundaries. Include all components that are required to satisfy those functions in section 5 of this appendix that have been determined to be risk-significant functions per NUMARC 93-01.

If none of the functions listed in section five for a system are determined to be risk significant, then:

- If only one function is listed for a system, then this function must be monitored (for example, CE NSSS designs use the Containment Spray system for RHR but this system is redundant to the containment coolers and may not be risk significant. It would be monitored.)
- If multiple functions are listed for a system, then monitor the most risk significant one. ~~(For example BWR Residual Heat Removal systems lists three functions. If~~

~~none of them are determined to be risk significant, monitor the function that is determined to be the most risk significant of the three.)~~ Use the Birnbaum Importance values to determine which function is most important.

For fluid systems the boundary should extend from the water source (e.g., tanks, sumps, etc.) to the injection point (e.g., RCS, Steam Generators). For example, high-pressure injection may have both an injection mode with suction from the refueling water storage tank and a recirculation mode with suction from the containment sump. For Emergency AC systems, the system consists of all class 1E generators at the station.

Additional system specific guidance on system boundaries can be found in section 5 titled "Additional Guidance for Specific Systems" at the end of this appendix.

Some common conditions that may occur are discussed below.

System Interface Boundaries

For water connections from systems that provide cooling water to a single component in a monitored system, the final connecting valve is included in the boundary of the frontline system rather than the cooling water system. For example, for service water that provides cooling to support an AFW pump, only the final valve in the service water system that supplies the cooling water to the AFW system is included in the AFW system scope. This same valve is not included in the cooling water support system scope. The equivalent valve in the return path, if present, will also be included in the frontline system boundary.

Water Sources and Inventory

Water tanks are not considered to be monitored components. As such, they do not contribute to URI. However, periods of insufficient water inventory contribute to UAI if they result in loss of the risk-significant train function for the required mission time. If additional water sources are required to satisfy train mission times, only the connecting active valve from the additional water source is considered as a monitored component for calculating UAI. If there are valves in the primary water source that must change state to permit use of the additional water source, these valves are considered monitored and should be included in UAI for the system.

Common Components

Some components in a system may be common to more than one system, in which case the unavailability of a common component is included in all affected systems. ~~(However, see "Additional Guidance for Specific Systems" for exceptions; for example, the PWR High Pressure Safety Injection System.)~~

1.1.2. Identification of Trains within the System

Each monitored system shall then be divided into trains to facilitate the monitoring of unavailability.

A train consists of a group of components that together provide the risk significant functions of the system described in the "additional guidance for specific mitigating systems". The number of trains in a system is generally determined as follows:

- For~~for~~ systems that provide cooling of fluids, the number of trains is determined by the number of parallel heat exchangers, or the number of parallel pumps, or the minimum number of parallel flow paths, whichever is fewer.
- For~~for~~ emergency AC power systems the number of trains is the number of class 1E emergency (diesel, gas turbine, or hydroelectric) generators at the station that are installed to power shutdown loads in the event of a loss of off-site power. (For example, this does not include the diesel generator dedicated to the BWR HPCS system, which is included in the scope of the HPCS system.)

Some components or flow paths may be included in the scope of more than one train. For example, one set of flow regulating valves and isolation valves in a three-pump, two-steam generator system are included in the motor-driven pump train with which they are electrically associated, but they are also included (along with the redundant set of valves) in the turbine-driven pump train. In these instances, the effects of unavailability of the valves should be reported in all affected trains. Similarly, when two trains provide flow to a common header, the effect of isolation or flow regulating valve failures in paths connected to the header should be considered in both trains.

Additional system specific guidance on train definition can be found in section 5 titled "Additional Guidance for Specific Systems" at the end of this appendix.

Additional guidance is provided below for the following specific circumstances that are commonly encountered:

- Cooling Water Support System Trains
- Swing Trains and Components Shared Between Units
- Maintenance Trains and Installed Spares
- Trains or Segments that Cannot Be Removed from Service.

<u>Cooling Water Support Systems and Trains</u>

The cooling water function is typically accomplished by multiple systems, such as service water and component cooling water. A separate value for UAI will be calculated for each of the systems in this indicator and then they will be added together to calculate an overall UAI value.

In addition, cooling water systems are frequently not configured in discrete trains. In this case, the system should be divided into logical segments and each segment treated as a train. This approach is also valid for other fluid systems that are not configured in obvious trains. The way these functions are modeled in the plant-specific PRA will determine a logical approach for train determination. For example, if the PRA modeled separate pump and line segments (such as suction and discharge headers), then the number of pumps and line segments would be the number of trains.

<u>Unit Swing trains and components shared between units</u>

Swing trains/components are trains/components that can be aligned to any unit. To be credited as such, their swing capability must be modeled in the PRA to provide an appropriate Fussell-Vesely value.

Maintenance Trains and Installed Spares

Some power plants have systems with extra trains to allow preventive maintenance to be carried out with the unit at power without impacting the risk-significant function of the system. That is, one of the remaining trains may fail, but the system can still perform its risk significant function. To be a maintenance train, a train must not be needed to perform the system's risk significant function.

An "installed spare" is a component (or set of components) that is used as a replacement for other equipment to allow for the removal of equipment from service for preventive or corrective maintenance without impacting the number of trains available to achieve the risk-significant function of the system. To be an "installed spare," a component must not be needed for any train of the system to perform the risk significant function. A typical installed spare configuration is a two train system with a third pump that can be aligned to either train (both from a power and flow perspective), but is normally not aligned and when it is not aligned receives no auto start signal. In a two train system where each train has two 100% capacity pumps that are both normally aligned, the pumps are not considered installed spares, but are redundant components within that train.

Unavailability of an installed spare is not monitored. Trains in a system with an installed spare are not considered to be unavailable when the installed spare is aligned to that train. In the example above, a train would be considered to be unavailable if neither the normal component nor the spare component is aligned to the train.

Trains or Segments that Cannot Be Removed from Service

In some normally operating systems (e.g. Cooling Water Systems), there may exist trains or segments of the system that cannot physically be removed from service while the plant is operating at power. These should be documented in the Basis Document and not included in unavailability monitoring.

1.2. Collection of Plant Data

Plant data for the UAI portion of the index includes:

- Actual train total unavailability (planned and unplanned) data for the most recent 12 quarter period collected on a quarterly basis,
- Plant specific baseline planned unavailability, and
- Generic baseline unplanned unavailability.

Each of these data inputs to UAI will be discussed in the following sections.

1.2.1. Actual Train Unavailability

The Consolidated Data Entry (CDE) inputs for this parameter are Train Planned Unavailable Hours and Train Unplanned Unavailable Hours. Critical hours are derived from reactor startup and shutdown occurrences. The actual calculation of Train Unavailability is performed by CDE.

Train Unavailability: Train unavailability is the ratio of the hours the train was unavailable to perform its risk-significant functions due to planned or unplanned

maintenance or test during the previous 12 quarters while critical to the number of critical hours during the previous 12 quarters.

Train unavailable hours: The hours the train was not able to perform its risk significant function while critical. Fault exposure hours are not included; unavailable hours are counted only for the time required to recover the train's risk-significant functions. Unavailability must be by train; do not use average unavailability for each train because trains may have unequal risk weights.

Planned unavailable hours: These hours include time a train or segment is removed from service for a reason other than equipment failure or human error. Examples of activities included in planned unavailable hours are preventive maintenance, testing, equipment modification, or any other time equipment is electively removed from service to correct a degraded condition that had not resulted in loss of function. Based on the plant history of previous three years, planned baseline hours for functional equipment that is electively removed from service but could not be planned in advance can be estimated and the basis documented. When used in the calculation of UAI, if the planned unavailable hours are less than the baseline planned unavailable hours, the planned unavailable hours will be set equal to the baseline value.

~~*Planned unavailable hours:* These hours include time the train was out of service for maintenance, testing, equipment modification, or any other time equipment is electively removed from service and the activity is planned in advance. When used in the calculation of UAI, if the planned unavailable hours are less than the baseline planned unavailable hours, the planned unavailable hours will be set equal to the baseline value.~~

Unplanned unavailable hours: These hours include ~~corrective maintenance time or~~ elapsed time between the discovery and the restoration to service of an equipment failure or human error (such as a misalignment) that makes the train unavailable. Unavailable hours to correct discovered conditions that render a monitored component incapable of performing its risk-significant function are counted as unplanned unavailable hours. An example of this is a condition discovered by an operator on rounds, such as an obvious oil leak, that resulted in the equipment being non-functional even though no demand or failure actually occurred. Unavailability due to mis-positioning of components that renders a train incapable of performing its risk-significant functions is included in unplanned unavailability for the time required to recover the risk-significant function.

~~*Unplanned unavailable hours:* These hours include corrective maintenance time or elapsed time between the discovery and the restoration to service of an equipment failure or human error (such as a misalignment) that makes the train unavailable. Unavailable hours to correct discovered conditions that render a monitored component incapable of performing its risk-significant function are counted as unplanned unavailable hours. An example of this is a condition discovered by an operator on rounds, such as an obvious oil leak, that resulted in the equipment being non-functional even though no demand or failure actually occurred. Unavailability due to mis-positioning of components that renders a train incapable of performing its risk-significant functions is included in unplanned unavailability for the time required to recover the risk-significant function.~~

Additional guidance on the following topics for counting train unavailable hours is provided below.

- Short Duration Unavailability
- Credit for Operator Recovery Actions to Restore the Risk-Significant Function

Short Duration Unavailability

Trains are generally considered to be available during periodic system or equipment realignments to swap components or flow paths as part of normal operations. Evolutions or surveillance tests that result in less than 15 minutes of unavailable hours per train at a time need not be counted as unavailable hours. Licensees should compile a list of surveillances or evolutions that meet this criterion and have it available for inspector review. The intent is to minimize unnecessary burden of data collection, documentation, and verification because these short durations have insignificant risk impact

Credit for Operator Recovery Actions to Restore the Risk-Significant Functions

1. *During testing or operational alignment*:

Unavailability of a risk-significant function during testing or operational alignment need not be included if the test or operational alignment configuration is automatically overridden by a valid starting signal, or the function can be promptly restored either by an operator in the control room or by a designated operator[1] stationed locally for that purpose. Restoration actions must be contained in a written procedure[2], must be uncomplicated (*a single action or a few simple actions*), must be capable of being restored in time to satisfy PRA success criteria and must not require diagnosis or repair. Credit for a designated local operator can be taken only if (s)he is positioned at the proper location throughout the duration of the test or operational alignment for the purpose of restoration of the train should a valid demand occur. The intent of this paragraph is to allow licensees to take credit for restoration actions that are virtually certain to be successful (i.e., probability nearly equal to 1) during accident conditions.

The individual performing the restoration function can be the person conducting the test or operational alignment and must be in communication with the control room. Credit can also be taken for an operator in the main control room provided (s)he is in close proximity to restore the equipment when needed. Normal staffing for the test or operational alignment may satisfy the requirement for a dedicated operator, depending on work assignments. In all cases, the staffing must be considered in advance and an operator identified to perform the restoration actions independent of other control room actions that may be required.

Under stressful, chaotic conditions, otherwise simple multiple actions may not be accomplished with the virtual certainty called for by the guidance (e.g., lifting test leads and landing wires; or clearing tags). In addition, some manual operations of systems designed to operate automatically, such as manually controlling HPCI turbine to establish

[1] Operator in this circumstance refers to any plant personnel qualified and designated to perform the restoration function.

[2] Including restoration steps in an approved test procedure.

and control injection flow, are not virtually certain to be successful. These situations should be resolved on a case-by-case basis through the FAQ process.

2. *During Maintenance*

Unavailability of a risk-significant function during maintenance need not be included if the risk-significant function can be promptly restored either by an operator in the control room or by a designated operator[3] stationed locally for that purpose. Restoration actions must be contained in an approved procedure, must be uncomplicated (*a single action or a few simple actions*), must be capable of being restored in time to satisfy PRA success criteria and must not require diagnosis or repair. Credit for a designated local operator can be taken only if (s)he is positioned at a proper location throughout the duration of the maintenance activity for the purpose of restoration of the train should a valid demand occur. The intent of this paragraph is to allow licensees to take credit for restoration of risk-significant functions that are virtually certain to be successful (i.e., probability nearly equal to 1).

The individual performing the restoration function can be the person performing the maintenance and must be in communication with the control room. Credit can also be taken for an operator in the main control room provided (s)he is in close proximity to restore the equipment when needed. Normal staffing for the maintenance activity may satisfy the requirement for a dedicated operator, depending on work assignments. In all cases, the staffing must be considered in advance and an operator identified to perform the restoration actions independent of other control room actions that may be required.

Under stressful chaotic conditions otherwise simple multiple actions may not be accomplished with the virtual certainty called for by the guidance (e.g., lifting test leads and landing wires, or clearing tags). These situations should be resolved on a case-by-case basis through the FAQ process.

3. *During degraded conditions*

No credit is allowed for operator actions during degraded conditions that render the train unavailable to perform its risk-significant functions.

1.2.2. Plant Specific Baseline Planned Unavailability

The initial baseline planned unavailability is based on actual plant-specific values for the period 2002 through 2004. (Plant specific values of the most recent data are used so that the indicator accurately reflects deviation from expected planned maintenance.) These values are expected to ~~remain fixed unless~~change if the plant maintenance philosophy is substantially changed with respect to on-line maintenance or preventive maintenance. In these cases, the planned unavailability baseline value should be adjusted to reflect the current maintenance practices, including low frequency maintenance evolutions. A review of any changes made in 2005 should be performed prior to initial implementation.

[3] Operator in this circumstance refers to any plant personnel qualified and designated to perform the restoration function.

Some significant maintenance evolutions, such as EDG overhauls, are performed at an interval greater than the three year monitoring period (5 or 10 year intervals). The baseline planned unavailability should be revised as necessary during the quarter prior to the planned maintenance evolution and then removed after twelve quarters. A comment should be placed in the comment field of the quarterly report to identify a substantial change in planned unavailability. The baseline value of planned unavailability is changed at the discretion of the licensee.~~ except that it shall be changed when changes in maintenance practices result in greater than a 25% change in the baseline planned unavailability.~~ Revised values will be used in the calculation the quarter following their update.

To determine the initial value of planned unavailability:

1) Record the total train unavailable hours reported under the Reactor Oversight Process for 2002-2004.
2) Subtract any fault exposure hours still included in the 2002-2004 period.
3) Subtract unplanned unavailable hours.
4) Add any on-line overhaul hours[4] and any other planned unavailability previously excluded under SSU in accordance with NEI 99-02, but not excluded under the MSPI. Short duration unavailability, for example, would not be added back in because it is excluded under both SSU and MSPI.
5) Add any planned unavailable hours for functions monitored under MSPI which were not monitored under SSU in NEI 99-02.
6) Subtract any unavailable hours reported when the reactor was not critical.
7) Subtract hours cascaded onto monitored systems by support systems. (However, do not subtract any hours already subtracted in the above steps.)
8) Divide the hours derived from steps 1-7 above by the total critical hours during 2002-2004. This is the baseline planned unavailability.

Support cooling planned unavailability baseline data is based on plant specific maintenance rule unavailability for years 2002-2004. Maintenance Rule practices do not typically differentiate planned from unplanned unavailability. However, best efforts will be made to differentiate planned and unplanned unavailability during this time period.

If maintenance practices at a plant have changed since the baseline years (e.g. increased planned online maintenance due to extended AOTs), then the baseline values should be adjusted to reflect the current maintenance practices and the basis for the adjustment documented in the plant's MSPI Basis Document.

1.2.3. Generic Baseline Unplanned Unavailability

The unplanned unavailability values are contained in Table 1 and remain fixed. They are based on ROP PI industry data from 1999 through 2001. (Most baseline data used in PIs come from the 1995-1997 time period. However, in this case, the 1999-2001 ROP data

[4] Note: The plant-specific PRA should model significant on-line overhaul hours.

are preferable, because the ROP data breaks out systems separately. Some of the industry 1995-1997 INPO data combine systems, such as HPCI and RCIC, and do not include PWR RHR. It is important to note that the data for the two periods is very similar.)

Table 1. Historical Unplanned Unavailability Train Values

(Based on ROP Industry wide Data for 1999 through 2001)

SYSTEM	UNPLANNED UNAVAILABILITY/TRAIN
EAC	1.7 E-03
PWR HPSI	6.1 E-04
PWR AFW (TD)	9.1 E-04
PWR AFW (MD)	6.9 E-04
PWR AFW (DieselD)	7.6 E-04
PWR (except CE) RHR	4.2 E-04
CE RHR	1.1 E-03
BWR HPCI*	3.3 E-03
BWR HPCS	5.4 E-04
BWR FWCI	Use plant specific Maintenance Rule data for 2002-2004
BWR RCIC	2.9 E-03
BWR IC	1.4E-03
BWR RHR	1.2 E-03
Support Cooling	Use plant specific Maintenance Rule data for 2002-2004

* Oyster Creek to use Core Spray plant specific Maintenance Rule data for 2002-2004

Unplanned unavailability baseline data for the support cooling systems should be developed from plant specific Maintenance Rule data from the period 2002-2004. Maintenance Rule practices do not typically differentiate planned from unplanned unavailability. However, best efforts will be made to differentiate planned and unplanned unavailability during this time period. NOTE: The sum of planned and unplanned unavailability cannot exceed the total unavailability.

1.3.Calculation of UAI

The specific formula for the calculation of UAI is provided in this section. Each term in the formula will be defined individually and specific guidance provided for the calculation of each term in the equation. Required inputs to the INPO Consolidated Data Entry (CDE) System will be identified.

Calculation of System UAI due to train unavailability is as follows:

$$UAI = \sum_{j=1}^{n} UAIt_j \qquad \text{Eq. 1}$$

where the summation is over the number of trains (n) and UAI_t is the unavailability index for a train.

Calculation of UAI_t for each train due to actual train unavailability is as follows:

$$UAIt = CDFp\left[\frac{FVUAp}{UAp}\right]_{\max}(UAt - UABLt) \qquad \text{Eq. 2}$$

where:

CDF_p is the plant-specific Core Damage Frequency,

FV_{UAp} is the train-specific Fussell-Vesely value for unavailability,

UA_P is the plant-specific PRA value of unavailability for the train,

UA_t is the actual unavailability of train t, defined as:

$$UA_t = \frac{\text{Unavailable hours (planned and unplanned) during the previous 12 quarters while critical}}{\text{Critical hours during the previous 12 quarters}}$$

and, determined in section 1.2.1

UA_{BLt} is the historical baseline unavailability value for the train (sum of planned unavailability determined in section 1.2.2 and unplanned unavailability in section1.2.3)

Calculation of the quantities in equation 2 are discussed in the following sections.

1.3.1. Calculation of Core Damage Frequency (CDFp)

The Core Damage Frequency is a CDE input value. The required value is the internal events, average maintenance, at power value. Internal flooding and fire are not included in this calculated value. In general, all inputs to this indicator from the PRA are calculated from the internal events model only. The truncation level chosen for the solution should be 5 to 6 orders of magnitude less than the baseline CDF. This should result in FV importance measure values that are sufficiently accurate.

1.3.2. Calculation of [FV/UA]max for each train

FV and UA are separate CDE input values. Equation 2 includes a term that is the ratio of a Fussell-Vesely importance value divided by the related unavailability or probability. This ratio is calculated for each train in the system and both the FV and UA are CDE inputs. (It may be recognized that the quantity [FV/UA] multiplied by the CDF is the Birnbaum importance measure, which is used in section 2.3.3.)

Calculation of these quantities is generally complex, but in the specific application used here, can be greatly simplified.

The simplifying feature of this application is that only those components (or the associated basic events) that can make a train unavailable are considered in the performance index. Components within a train that can each make the train unavailable are logically equivalent and the ratio FV/UA is a constant value for any basic event in that train. It can also be shown that for a given component or train represented by multiple basic events, the ratio of the two values for the component or train is equal to the ratio of values for any basic event within the train. Or:

$$\frac{FV_{be}}{UA_{be}} = \frac{FVUA_p}{UA_p} = \text{Constant}$$

Thus, the process for determining the value of this ratio for any train is to identify a basic event that fails the train, determine the probability for the event, determine the associated FV value for the event and then calculate the ratio.

The set of basic events to be considered for use in this section will obviously include any test and maintenance events applicable to the train under consideration. Basic events that represent failure on demand that are logically equivalent to the test and maintenance events should also be considered. Failure to run events should **not** be considered as they are often not logically equivalent to test and maintenance events. Use the basic event from this set that results in the largest ratio (hence the maximum notation on the bracket) to minimize the effects of truncation on the calculation.

Some systems have multiple modes of operation, such as PWR HPSI systems that operate in injection as well as recirculation modes. In these systems all monitored components are not logically equivalent; unavailability of the pump fails all operating modes while unavailability of the sump suction valves only fails the recirculation mode. In cases such as these, if unavailability events exist separately for the components within a train, the appropriate ratio to use is the maximum.

Treatment of PRA Modeling Asymmetries

In systems with rotated normally running pumps (e. g. cooling water systems), the PRA models may assume one pump is always the running and another is in standby. For example, a service water system may have two 100% capacity pumps in one train, an A and B pump. In practice the A and B pumps are rotated and each one is the running pump 50% of the time. In the PRA model however, the A pump is assumed to be always running and the B pump is always in assumed to be in standby. This will result in one pump appearing to be more important than the other when they are, in fact, of equal importance. This asymmetry in importance is driven by the assumption in the PRA, not the design of the plant.

In the case where the system is known to be symmetric in importance, for calculation of UAI, the importance measures for each train, or segment, should be averaged and the average applied to each train or segment. Care should be taken when applying this method to be sure the system is actually symmetric.

If the system is not symmetric and the capability exists to specify a specific alignment in the PRA model, the model should be solved in each specific alignment and the importance measures for the different alignments combined by a weighted average based on the estimated time each specific alignment is used in the plant.

Cooling Water and Service Water System $[FV/UA]_{max}$ Values

Component Cooling Water Systems (CCW) and Service Water Systems (SWS) at some nuclear stations contribute to risk in two ways. First, the systems provide cooling to equipment used for the mitigation of events and second, the failures (and unavailability) in the systems may also result in the initiation of an event. The contribution to risk from failures to provide cooling to other plant equipment is modeled directly through dependencies in the PRA model.

The contribution to risk from failures to provide cooling to other plant equipment is modeled directly through dependencies in the PRA model. However, the contribution due to event initiation is treated in four general ways in current PRAs:

1) The use of linked initiating event fault trees for these systems with the same basic events names used in the initiator and mitigation trees.
2) The use of linked initiating event fault trees for these systems with different basic events names used in the initiator and mitigation trees.
3) Fault tree solutions are generated for these systems external to the PRA and the calculated value is used in the PRA as a point estimate
4) A point estimate value is generated for the initiator using industry and plant specific event data and used in the PRA.

Each of these methods is discussed below.

Modeling Method 1

If a PRA uses the first modeling option, then the FV values calculated will reflect the total contribution to risk for a component in the system. No additional correction to the FV values is required.

Modeling Methods 2 and 3

The corrected ratio may be calculated as described for modeling method 4 or by the method described below.

If a linked initiating event fault tree with different basic events used in the initiator and mitigation trees is the modeling approach taken, or fault tree solutions are generated for these systems external to the PRA and the calculated value is used in the PRA as a point estimate, then the corrected ratio is given by:

$$[FV/UA]_{corr} = \left[\frac{FVc}{UAc} + \sum_{m=1}^{i}\left\{\frac{IE_{m,n}(1) - IE_{m,n}(0)}{IE_{m,n}(q_n)} * FVie_m\right\}\right].$$

In this expression the summation is taken over all system initiators ~~m~~ *i* that involve component *n*, where

FVc is the Fussell-Vesely for component *C* as calculated from the PRA Model. This does not include any contribution from initiating events,

UAc~~*URe*~~ is the basic event ~~unreliability~~ probability used in computing *FVc*; i.e. in the system response models,

$IE_{m,n}(q_n)$ is the system initiator frequency of initiating event *m* when the component *n* unreliability basic event is q_n. The event chosen in the initiator tree should represent the same failure mode for the component as the event chosen for ~~URc~~UAc,

$IE_{m,n}(1)$ is as above but $q_n=1$,

$IE_{m,n}(0)$ is as above but $q_n=0$

and

$FVie_m$ is the Fussell-Vesely importance contribution for the initiating event *m* to the CDF.

Since *FV* and ~~*UR*~~*-UA* are separate CDE inputs, use ~~*URc*~~*-UAc* and calculate *FV* from

$$FV = UAc * [FV / UA]_{corr}$$

Modeling Method 4

If a point estimate value is generated for the initiator using industry and plant specific event data and used in the PRA, then the corrected $[FV/\cancel{UR}UA]_{\cancel{ind}MAX}$ for a component *C* is calculated from the expression:

$$[FV / UA]_{MAX} = [(FVc + FVie * FVsc) / UAc]$$

Where:

FVc is the Fussell-Vesely for CDF for component *C* as calculated from the PRA Model. This does not include any contribution from initiating events.

FVie is the Fussell-Vesely contribution for the initiating event in question (e.g. loss of service water).

FVsc is the Fussell-Vesely **within the system fault tree only** for component *C* (i.e. the ratio of the sum of the cut sets in the fault tree solution in which that component appears to the overall system failure probability). Note that this may require the construction of a "satellite" system fault tree to arrive at an exact or approximate value for *FVsc* depending on the support system fault tree logic.

FV and ~~*UR*~~*-UA* are separate CDE input values.

2. System Unreliability Index (URI) Due to Component Unreliability

Calculation of the URI is performed in three major steps:

- Identification of the monitored components for each system,
- Collection of plant data, and
- Calculation of the URI.

Only the most risk significant components in each system are monitored to minimize the burden for each utility. It is expected that most, if not all the components identified for monitoring are

already being monitored for failure reporting to INPO and are also monitored in accordance with the maintenance rule.

2.1. Identify Monitored Components

Monitored Component: A component whose failure to change state or remain running renders the train incapable of performing its risk-significant functions. In addition, all pumps and diesels in the monitored systems are included as monitored components.

The identification of monitored components involves the use of the system boundaries and success criteria, identification of the components to be monitored within the system boundary and the scope definition for each component. Note that the system boundary defined in section 1.1.1 defines the scope of equipment monitored for unavailability. Only selected components within this boundary are chosen for unreliability monitoring. The first step in identifying these selected components is to identify the system risk significant functions and system success criteria.

2.1.1. Risk Significant Functions and Success Criteria

The system boundaries developed in section 1.1.1 should be used to complete the steps in the following section.

For each system, the at power risk significant functions described in the Appendix F section "Additional Guidance for Specific Systems," that were determined to be risk-significant in accordance with NUMARC 93-01, or NRC approved equivalents (e.g., the STP exemption request) and are reflected in the PRA shall be identified. Success criteria used in the PRA shall then be identified for these functions.

If the licensee has chosen to use success criteria documented in the plant specific PRA different from design basis success criteria, examples of plant specific performance factors that may be used to identify the required capability of the train/system to meet the risk-significant functions are provided below.

- Actuation
  - Time
  - Auto/manual
  - Multiple or sequential
- Success requirements
  - Numbers of components or trains
  - Flows
  - Pressures
  - Heat exchange rates
  - Temperatures
  - Tank water level
- Other mission requirements
  - Run time
  - State/configuration changes during mission
- Accident environment from internal events
  - Pressure, temperature, humidity
- Operational factors
  - Procedures

- Human actions
- Training
- Available externalities (e.g., power supplies, special equipment, etc.)

PRA analyses (e.g. operator action timing requirements) are sometimes based on thermal-hydraulic calculations that account for the best estimate physical capability of a system. These calculations should not be confused with calculations that are intended to establish system success criteria. For example a pump's flow input for PRA thermal-hydraulic calculations may be based on its actual pump curve showing 12,000 gpm at runout while the design basis minimum flow for the pump is 10,000gpm. The 10,000gpm value should be used for determination of success or failure of the pump for this indicator. This prevents the scenario of a component or system being operable per Technical Specifications and design basis requirements but unavailable or failed under this indicator.

If the licensee has chosen to use design basis success criteria in the PRA, it is not required to separately document them other than to indicate that is what was used.

If success criteria for a system vary by function or initiator, the most restrictive set will be used for the MSPI. Success criteria related to ATWS need not be considered.

2.1.2. Selection of Components

For unreliability, use the following process for determining those components that should be monitored. These steps should be applied in the order listed.

1) INCLUDE all pumps (except EDG fuel oil transfer pumps) and diesels.
2) Identify all AOVs, SOVs, HOVs and MOVs that change state to achieve the risk significant functions for the system as potential monitored components. Solenoid and Hydraulic valves identified for potential monitoring are only those in the process flow path of a fluid system. Solenoid valves that provide air to AOVs are considered part of the AOV. Hydraulic valves that are control valves for turbine driven pumps are considered part of the pump and are not monitored separately. Check valves and manual valves are not included in the index.
    a. INCLUDE those valves from the list of valves from step 2 whose failure alone can fail a train. The success criteria used to identify these valves are those identified in the previous section. (See Figure F-5)
    b. INCLUDE redundant valves from the list of valves from step 2 within a multi-train system, whether in series or parallel, where the failure of both valves would prevent all trains in the system from performing a risk-significant function. The success criteria used to identify these valves are those identified in the previous section.(See Figure F-5)
3) INCLUDE components that cross tie monitored systems between units (i.e. Electrical Breakers and Valves) if they are modeled in the PRA.
4) EXCLUDE those valves and breakers from steps 2 and 3 above whose Birnbaum importance, (See section 2.3.3~~1.3.32.3.3~~) as calculated in this appendix (including adjustment for support system initiator, if applicable, and common cause), is less

than 1.0e-06. This rule is applied at the discretion of the individual plant. A balance should be considered in applying this rule between the goal to minimize the number of components monitored and having a large enough set of components to have an adequate data pool. If a decision is made to exclude some valves based on low Birnbaum values, but not all, to ensure an adequate data pool, then the valves eliminated from monitoring shall be those with the smallest Birnbaum values. Symmetric valves in different trains should be all eliminated or all retained.

2.1.3. Definition of Component Boundaries

Table 2 defines the boundaries of components, and Figures F-1, F-2, F-3 and F-4 provide examples of typical component boundaries as described in Table 2.

Table 2. Component Boundary Definition

Component	Component boundary
Diesel Generators	The diesel generator boundary includes the generator body, generator actuator, lubrication system (local), fuel system (local), cooling components (local), startup air system receiver, exhaust and combustion air system, dedicated diesel battery (which is not part of the normal DC distribution system), individual diesel generator control system, cooling water isolation valves, circuit breaker for supply to safeguard buses and their associated control circuit (relay contacts for normally auto actuated components, control board switches for normally operator actuated components.
Motor-Driven Pumps	The pump boundary includes the pump body, motor/actuator, lubrication system, cooling components of the pump seals, the voltage supply breaker, and its associated control circuit (relay contacts for normally auto actuated components, control board switches for normally operator actuated components.
Turbine-Driven Pumps	The turbine-driven pump boundary includes the pump body, turbine/actuator, lubrication system (including pump), extractions, turbo-pump seal, cooling components, and associated control system (relay contacts for normally auto actuated components, control board switches for normally operator actuated components) including the control valve.
Motor-Operated Valves	The valve boundary includes the valve body, motor/actuator, the voltage supply breaker (both motive and control power) and its associated control circuit (relay contacts for normally auto actuated components, control board switches for normally operator actuated components).
Solenoid Operated Valves	The valve boundary includes the valve body, the operator, the supply breaker (both power and control) or fuse and its associated control circuit (relay contacts for normally auto actuated components, control board switches for normally operator actuated components).
Hydraulic Operated Valves	The valve boundary includes the valve body, the hydraulic operator, associated local hydraulic system, associated solenoid operated valves, the power supply breaker or fuse for the solenoid valve, and its associated control circuit (relay contacts for normally auto actuated components, control board switches for normally operator actuated components).

Component	Component boundary
Air-Operated Valves	The valve boundary includes the valve body, the air operator, associated solenoid-operated valve, the power supply breaker or fuse for the solenoid valve, and its associated control circuit (relay contacts for normally auto actuated components, control board switches for normally operator actuated components.

For control and motive power, only the last relay, breaker or contactor necessary to power or control the component is included in the monitored component boundary. For example, if an ESFAS signal actuates a MOV, only the relay that receives the ESFAS signal in the control circuitry for the MOV is in the MOV boundary. No other portions of the ESFAS are included. Control switches that provide manual backup for automatically actuated equipment are considered outside the component boundary. Control switches (either in the control room or local) that provide the primary means for actuating a component are monitored as part of the component it actuates. In either case, failure modes of a control switch that render the controlled component unable to perform its function (e.g., prevents auto start of a pump) need to be considered for unavailability of the component.

Each plant will determine its monitored components and have them available for NRC inspection.

2.2. Collection of Plant Data

Plant data for the URI includes:

- Demands and run hours
- Failures

2.2.1. Demands and Run Hours

Start demand: Any demand for the component to successfully start (includes valve and breaker demands to open or close) -to perform its risk-significant functions, actual or test. (Exclude post maintenance test demands, unless in case of a failure the cause of failure was independent of the maintenance performed. In this case the demand will be counted as well as the failure.) The number of demands is:

- the number of actual ESF demands plus
- the number of estimated test demands plus
- the number of estimated operational/alignment demands.

Best judgment should be used to define each category of demands. But strict segregation of demands between each category is not as important as the validity of total number of demands. The number of estimated demands can be derived based on the number of times a procedure or maintenance activity is performed, or based on historical data over an operating cycle or more. It is also permissible to use the actual number of test and operational demands.

An update to the estimated demands is required if a change to the basis for the estimated demands results in a >25% change in the estimate of total demands of a group of components within a system. For example, a single MOV in a system may have its estimated demands change by greater than 25%, but revised estimates are not required unless the total number of estimated demands for all MOVs in the system changes by greater than 25%. The new estimate will be used in the calculation the quarter following the input of the updated estimates into CDE. Some monitored valves will include a throttle function as well as open and close functions. One should not include every throttle movement of a valve as a counted demand. Only the initial movement of the valve should be counted as a demand.

Some components such as valves may need to be in different states at different times to fulfill the risk significant function of the monitored system. In this case each change of state is a demand. An example would be a minimum flow valve that needs to open on the pump start (one demand) then close (second demand) to prevent a diversion path or a valve needs to open(one demand) for the initial water supply then close (second demand) while another water supply valve opens.

Post maintenance tests: Tests performed following maintenance but prior to declaring the train/component operable, consistent with Maintenance Rule implementation.

Load/Run demand: Applicable to EDG only. Any demand for the EDG output breaker to close, given that the EDG has successfully started and achieved required speed and voltage. (Exclude post maintenance tests, unless the cause of failure was independent of the maintenance performed.)

Run Hours: The number of run hours is:

- the number of actual ESF run hours, plus
- the number of estimated test run hours, plus
- the number of estimated operational/alignment run hours.

Best judgment should be used to define each category of run hours. But strict segregation of run hours between the test and operational categories is not as important as the validity of total number of run hours. The number of estimated run hours can be derived based on the number of times a procedure or maintenance activity is performed, or based on historical data over an operating cycle or more. It is also permissible to use the actual number of test and operational run hours. Run hours include the first hour of operation of a component. An update to the estimated run hours is required if a change to the basis for the estimated hours results in a >25% change in the estimate of the total run hours for a group of components in a system. The new estimate will be used in the calculation the quarter following the input of the updated estimates into CDE.

2.2.2. Failures

In general, a failure of a component for the MSPI is any circumstance when the component is not in a condition to meet the performance requirements defined by the PRA success criteria or mission time for the functions monitored under the MSPI. This is true whether the condition is revealed through a demand or discovered through other means.

Failures for the MSPI are not generally equivalent to functional failures in the maintenance rule. For example, a failure may not count as a functional failure under the maintenance rule because it was not considered maintenance preventable, but it would count as a failure for the MSPI. Conversely, a failure may count as a maintenance rule functional failure, but not count as an MSPI failure because the function affected by the failure is a maintenance rule function but is not a monitored function for MSPI.

EDG failure to start: A failure to start includes those failures up to the point the EDG has achieved required speed and voltage. (Exclude post maintenance tests, unless the cause of failure was independent of the maintenance performed.)

EDG failure to load/run: Given that it has successfully started, a failure of the EDG output breaker to close, to successfully load sequence and to run/operate for one hour to perform its risk-significant functions. This failure mode is treated as a demand failure for calculation purposes. (Exclude post maintenance tests, unless the cause of failure was independent of the maintenance performed.)

EDG failure to run: Given that it has successfully started and loaded and run for an hour, a failure of an EDG to run/operate. (Exclude post maintenance tests, unless the cause of failure was independent of the maintenance performed.)

Pump failure on demand: A failure to start and run for at least one hour is counted as failure on demand. (Exclude post maintenance tests, unless the cause of failure was independent of the maintenance performed.)

Pump failure to run: Given that it has successfully started and run for an hour, a failure of a pump to run/operate. (Exclude post maintenance tests, unless the cause of failure was independent of the maintenance performed.)

Valve failure on demand: A failure to transfer to the required risk significant state (open, close, or throttle to the desired position as applicable) is counted as failure on demand. (Exclude post maintenance tests, unless the cause of failure was independent of the maintenance performed.)

Breaker failure on demand: A failure to transfer to the required risk significant state (open or close as applicable) is counted as failure on demand. (Exclude post maintenance tests, unless the cause of failure was independent of the maintenance performed.)

<u>Treatment of Demand and Run Failures</u>

Failures of monitored components on demand or failures to run, either actual or test are included in unreliability. Failures on demand or failures to run while not critical are included unless an evaluation determines the failure would not have affected the ability of the component to perform its risk-significant at power function. In no case can a postulated action to recover a failure be used as a justification to exclude a failure from the count.

<u>Treatment of Discovered Conditions that Result in the Inability to Perform a Risk Significant Function</u>

Discovered conditions of monitored components (conditions within the component boundaries defined in section 2.1.3) that render a monitored component incapable of performing its risk-significant function are included in unreliability as a failure, even

though no actual failure on demand or while running existed. This treatment accounts for the amount of time that the condition existed prior to discovery, when the component was in an unknown failed state.

Conditions that render a monitored component incapable of performing its risk-significant function that are immediately annunciated in the control room without an actual demand occurring are a special case of a discovered condition. In this instance the discovery of the condition is coincident with the failure. This condition is applicable to normally energized control circuits that are associated with monitored components, which annunciate on loss of power to the control circuit. For this circumstance there is no time when the component is in an unknown failed state. In this instance appropriate train unavailable hours will be accounted for, but no additional failure will be counted.

For other discovered conditions where the discovery of the condition is not coincident with the failure, the appropriate failure mode must be accounted for in the following manner:

- For valves and breakers a demand failure would be assumed and included. An additional demand may also be counted.
- For pumps and diesels, if the discovered condition would have prevented a successful start, a failure is included, but there would be no run time hours or run failure. An additional demand may also be counted.
- For diesels, if it was determined that the diesel would start, but would fail to load (e.g. a condition associated with the output breaker), a load/run failure would be assumed and included. An additional start demand and load/run demand may also be counted.
- For pumps and diesels, if it was determined that the pump/diesel would start and load run, but would fail sometime prior to completing its mission time, a run failure would be assumed. A start demand and a load/run demand would also be assumed and included. The evaluated failure time may be included in run hours.

For a running component that is secured from operation due to observed degraded performance, but prior to failure, then a run failure shall be assumed unless evaluation of the condition shows that the component would have continued to operate for the risk-significant mission time starting from the time the component was secured.

Unplanned unavailability would accrue in all instances from the time of discovery or annunciation consistent with the definition in section 1.2.1.

~~Discovered conditions, even if no actual demand or test existed, that render a monitored component incapable of performing its risk-significant functions are included in unreliability as a demand and a failure. The appropriate failure mode must be accounted for. For example, for valves, a demand and a demand failure would be assumed and included in URI. For pumps and diesels, if the discovered condition would have prevented a successful start, a demand and a failure is included in URI, but there would be no run time hours or run failures. If it was determined that the pump/diesel would start and load run, but would fail sometime prior to completing its mission time, the evaluated failure time would be included in run hours and a run failure would be~~

~~assumed. A start demand and start failure would not be included. If a running component is secured from operation due to observed degraded performance, but prior to failure, then a run failure shall be counted unless evaluation of the condition shows that the component would have continued to operate for the risk-significant mission time starting from the time the component was secured. Unavailable hours are included for the time required to recover the risk-significant function(s) and only while critical.~~

~~Discovered conditions, or actual unavailability due to mispositioning of non-monitored components that render a train incapable of performing its risk-significant functions are only included in unavailability for the time required to recover the risk-significant function(s) and only while critical.~~

Loss of risk significant function(s) is assumed to have occurred if the established success criteria have not been met. If subsequent analysis identifies additional margin for the success criterion, future impacts on URI or UAI for degraded conditions may be determined based on the new criterion. However, the current quarter's URI and UAI must be based on the success criteria of record at the time the degraded condition is discovered. If the new success criteria causes a revision to the PRA affecting the numerical results (i.e. CDF and FV), then the change must be included in the PRA model and the appropriate new values calculated and incorporated in the MSPI Basis Document prior to use in the calculation of URI and UAI. If the change in success criteria has no effect on the numerical results of the PRA (representing only a change in margin) then only the MSPI Basis Document need be revised prior to using the revised success criteria.

If the degraded condition is not addressed by any of the pre-defined success criteria, an engineering evaluation to determine the impact of the degraded condition on the risk-significant function(s) should be completed and documented. The use of component failure analysis, circuit analysis, or event investigations is acceptable. Engineering judgment may be used in conjunction with analytical techniques to determine the impact of the degraded condition on the risk-significant function. The engineering evaluation should be completed as soon as practical. If it cannot be completed in time to support submission of the PI report for the current quarter, the comment field shall note that an evaluation is pending. The evaluation must be completed in time to accurately account for unavailability/unreliability in the next quarterly report. Exceptions to this guidance are expected to be rare and will be treated on a case-by-case basis. Licensees should identify these situations to the resident inspector.

<u>Failures and Discovered Conditions of Non-Monitored Structures, Systems, and Components (SSC)</u>

Failures of SSC's that are not included in the performance index will not be counted as a failure or a demand. Failures of SSC's that would have caused an SSC within the scope of the performance index to fail will not be counted as a failure or demand. An example could be a manual suction isolation valve left closed which would have caused a pump to fail. This would not be counted as a failure of the pump. Any mis-positioning of the valve that caused the train to be unavailable would be counted as unavailability from the time of discovery. The significance of the mis-positioned valve prior to discovery would be addressed through the inspection process. (Note, however, in the above example, if the

shut manual suction isolation valve resulted in an actual pump failure, the pump failure would be counted as a demand and failure of the pump.)

2.3. Calculation of URI

Unreliability is monitored at the component level and calculated at the system level. URI is proportional to the weighted difference between the plant specific component unreliability and the industry average unreliability. The Birnbaum importance is the weighting factor. Calculation of system URI due to this difference in component unreliability is as follows:

$$URI = \sum_{j=1}^{m} \begin{bmatrix} B_{Dj}(UR_{DBCj} - UR_{DBLj}) \\ + B_{Lj}(UR_{LBCj} - UR_{LBLj}) \\ + B_{Rj}(UR_{RBCj} - UR_{RBLj}) \end{bmatrix} \qquad \text{Eq. 3}$$

Where the summation is over the number of monitored components (m) in the system, and:

B_{Dj}, B_{Lj} *and* B_{Rj} are the Birnbaum importance measures for the failure modes fail on demand, fail to load and fail to run respectively,

UR_{DBC}, UR_{LBC}, *and* UR_{RBC} are Bayesian corrected plant specific values of unreliability for the failure modes fail on demand, fail to load and fail to run respectively,

and

UR_{DBL}, UR_{LBL}, *and* UR_{RBL} are Baseline values of unreliability for the failure modes fail on demand, fail to load and fail to run respectively.

The Birnbaum importance for each specific component failure mode is defined as

$$B = CDF_p \left[\frac{FV_{URc}}{UR_{pc}} \right]_{MAX} \qquad \text{Eq. 4}$$

Where,

CDF_p is the plant-specific internal events, at power, core damage frequency,

FV_{URc} is the component and failure mode specific Fussell-Vesely value for unreliability,

UR_{Pc} is the plant-specific PRA value of component and failure mode unreliability,

Failure modes ~~considered~~ defined for each component type are provided below. There may be several basic events in a PRA that correspond to each of these failure modes used to collect plant specific data. These failure modes are used to define how the actual failures in the plant are categorized.

Valves and Breakers:
- Fail on Demand (Open/Close)

Pumps:
- Fail on Demand (Start)
- Fail to Run

Emergency Diesel Generators:
- Fail on Demand (Start)
- Fail to Load/Run
- Fail to Run

The following sections will discuss the calculation of each of the terms in equations 3 and 4.

2.3.1. Calculation of Core Damage Frequency (CDFp)

The Core Damage Frequency is a CDE input value. The required value is the internal events average maintenance at power value. Internal flooding and fire are not included in this calculated value. In general, all inputs to this indicator from the PRA are calculated from the internal events model only. The truncation level chosen for the solution should be 5 to 6 orders of magnitude less than the baseline CDF. This should result in FV importance measure values that are sufficiently accurate.

2.3.2. Calculation of [FV/UR]max

The FV, UR and common cause adjustment values developed in this section are separate CDE input values.

Equation 4 includes a term that is the ratio of a Fussell-Vesely importance value divided by the related unreliability. The calculation of this ratio is performed in a similar manner to the ratio calculated for UAI, except that the ratio is calculated for each monitored component. One additional factor needs to be accounted for in the unreliability ratio that was not needed in the unavailability ratio, the contribution to the ratio from common cause failure events. The discussion in this section will start with the calculation of the initial ratio and then proceed with directions for adjusting this value to account for the cooling water initiator contribution, as in the unavailability index, and then the common cause correction.

It can be shown that for a given component represented by multiple basic events, the ratio of the two values for the component is equal to the ratio of values for any basic event representing the component. Or,

$$\frac{FVbe}{URbe} = \frac{FVURc}{URPc} = \text{Constant}$$

as long as the basic events under consideration are logically equivalent.

Note that the constant value may be different for the unreliability ratio and the unavailability ratio because the two types of events are frequently not logically equivalent. For example recovery actions may be modeled in the PRA for one but not the other. This ratio may also be different for fail on demand and fail to run events for the same component. This is particularly true for cooling water pumps that have a trip initiation function as well as a mitigation function.

There are two options for determining the initial value of this ratio:. The first option is to identify one maximum ratio that will be used for all applicable failure modes for the component. The second option is to identify a separate ratio for each failure mode for the component. These two options will be discussed next.

Option 1

Identify one maximum ratio that will be used for all applicable failure modes for the component. The process for determining a single value of this ratio for all failure modes of a component is to identify all basic events that fail the component (excluding common cause events and test and maintenance events). It is typical, given the component scope

definitions in Table 2, that there will be several plant components modeled separately in the plant PRA that make up the MSPI component definition. For example, it is common that in modeling an MOV, the actuation relay for the MOV and the power supply breaker for the MOV are separate components in the plant PRA. Ensure that the basic events related to all of these individual components are considered when choosing the appropriate *[FV/UR]* ratio.

Determine the failure probabilities for the events, determine the associated FV values for the events and then calculate the ratios, $[FV/UR]_{ind}$, where the subscript refers to independent failures. Choose from this list the basic event for the component and its associated FV value that results in the largest *[FV/UR]* ratio. This will typically be the event with the largest failure probability to minimize the effects of truncation on the calculation.

Option 2

Identify a separate ratio for each failure mode for the component The process for determining a ratio value for each failure mode proceeds similarly by first identifying ~~the~~ all basic events related to each component. After this step, each basic event must be associated with one of the specific defined failure modes for the component. Proceed as in option 1 to find the values that result in the largest ratio for each failure mode for the component. In this option the CDE inputs will include FV and UR values for each failure mode of the component.

Treatment of PRA Modeling Asymmetries

In systems with rotated normally running pumps (e. g. cooling water systems), the PRA models may assume one pump is always the running and another is in standby. For example, a service water system may have two 100% capacity pumps in one train, an A and B pump. In practice the A and B pumps are rotated and each one is the running pump 50% of the time. In the PRA model however, the A pump is assumed to be always running and the B pump is always in assumed to be in standby. This will result in one pump appearing to be more important than the other when they are, in fact, of equal importance. This asymmetry in importance is driven by the assumption in the PRA, not the design of the plant.

When this is encountered, the importance measures may be used as they are calculated from the PRA model for the component importance used in the calculation of URI. Although these are not actually the correct importance values, the method used to calculate URI will still provide the correct result because the same value of unreliability is used for each component as a result of the data being pooled. Note that this is different from the treatment of importance in the calculation of UAI.

Cooling Water and Service Water System $[FV/UR]_{ind}$ Values

Ensure that the correction term in this section is applied prior to the calculation of the common cause correction in the next section. Component Cooling Water Systems (CCW) and Service Water Systems (SWS) at some nuclear stations contribute to risk in two ways. First, the systems provide cooling to equipment used for the mitigation of events and second, the failures in the systems may also result in the initiation of an event.

Depending on the manner in which the initiator contribution is treated in the PRA, it may be necessary to apply a correction to the FV/UR ratio calculated in the section above.

The correction must be applied to each FV/UR ratio used for this index. -If the option to use separate ratios for each component failure mode was used in the section above then this correction is calculated for each failure mode of the component.

The contribution to risk from failures to provide cooling to other plant equipment is modeled directly through dependencies in the PRA model. However, the contribution due to event initiation is treated in four general ways in current PRAs:

1) The use of linked initiating event fault trees for these systems with the same basic events used in the initiator and mitigation trees.
2) The use of linked initiating event fault trees for these systems with different basic events used in the initiator and mitigation trees.
3) Fault tree solutions are generated for these systems external to the PRA and the calculated value is used in the PRA as a point estimate
4) A point estimate value is generated for the initiator using industry and plant specific event data and used in the PRA.

Each of these methods is discussed below.

Modeling Method 1

If a PRA uses the first modeling option, then the FV values calculated will reflect the total contribution to risk for a component in the system. No additional correction to the FV values is required.

Modeling Methods 2 and 3

The corrected ratio may be calculated as described for modeling method 4 or by the method described below.

If a linked initiating event fault tree with different basic events used in the initiator and mitigation trees is the modeling approach taken, or fault tree solutions are generated for these systems external to the PRA and the calculated value is used in the PRA as a point estimate, then the corrected ratio is given by:

$$[FV/UR]_{corr} = \left[\frac{FVc}{URc} + \sum_{m=1}^{i}\left\{\frac{IE_{m,n}(1) - IE_{m,n}(0)}{IE_{m,n}(q_n)} * FVie_m\right\}\right].$$

In this expression the summation is taken over all system initiators ~~im~~ that involve component n, where

FVc is the Fussell-Vesely for component C as calculated from the PRA Model. This does not include any contribution from initiating events,

URc is the basic event unreliability used in computing FVc; i.e. in the system response models,

$IE_{m,n}(q_n)$ is the system initiator frequency of initiating event m when the component n unreliability basic event is q_n. The event chosen in the initiator tree

should represent the same failure mode for the component as the event chosen for URc,

$IE_{m,n}(1)$ is as above but $q_n=1$,

$IE_{m,n}(0)$ is as above but $q_n=0$

and

$FVie_m$ is the Fussell-Vesely importance contribution for the initiating event *m* to the CDF.

Since *FV* and *UR* are separate CDE inputs, use *URc* and calculate *FV* from

$$FV = URc * [FV / UR]_{corr}$$

Modeling Method 4

If a point estimate value is generated for the initiator using industry and plant specific event data and used in the PRA, then the corrected $[FV/UR]_{MAXind}$ for a component *C* is calculated from the expression:

$$[FV / UR]_{MAX} = [(FVc + FVie * FVsc) / URc]$$

Where:

FVc is the Fussell-Vesely for CDF for component *C* as calculated from the PRA Model. This does not include any contribution from initiating events.

FVie is the Fussell-Vesely contribution for the initiating event in question (e.g. loss of service water).

FVsc is the Fussell-Vesely **within the system fault tree only** for component *C* (i.e. the ratio of the sum of the cut sets in the fault tree solution in which that component appears to the overall system failure probability). Note that this may require the construction of a "satellite" system fault tree to arrive at an exact or approximate value for *FVsc* depending on the support system fault tree logic.

FV and UR are separate CDE input values.

Including the Effect of Common Cause in $[FV/UR]_{max}$

Be sure that the correction factors from the previous section are applied prior to the common cause correction factor being calculated.

Changes in the independent failure probability of an SSC imply a proportional change in the common cause failure probability, even though no actual common cause failures have occurred. The impact of this effect on URI is considered by including a multiplicative adjustment to the $[FV/UR]_{ind}$ ratio developed in the section above. This multiplicative factor (A) is a CDE input value.

Two methods are provided for including this effect, a simple generic approach that uses bounding generic adjustment values and a more accurate plant specific method that uses values derived from the plant specific PRA. Different methods can be used for different systems. However, within an MSPI system, either the generic or plant specific method must be used for all components in the system, not a combination of different methods.

For the cooling water system, different methods may be used for the subsystems that make up the cooling water system. For example, component cooling water and service water may use different methods.

The common cause correction factor is only applied to components within a system and does not include cross system (such as between the BWR HPCI and RCIC systems) common cause.

Generic CCF Adjustment Values

Generic values have been developed for monitored components that are subject to common cause failure. The correction factor is used as a multiplier on the [FV/UR] ratio for each component in the common cause group. This method may be used for simplicity and is recommended for components that are less significant contributors to the URI (e.g. [FV/UR] is small). The multipliers are provided in the table below.

Table 3. Generic CCF Adjustment Values

	EPS	HPI		HRS/		RHR
	EDG	MDP Running or Alternating+	MDP Standby	MDP Standby	TDP **	MDP Standby
Arkansas 1	1.25	2	1	1	1	1.5
Arkansas 2	1.25	1	2	1	1	1.5
Beaver Valley 1	1.25	2	1	1.25	1	1.5
Beaver Valley 2	1.25	2	1	1.25	1	1.5
Braidwood 1 & 2	3	1.25	1.25	1	1	1.5
Browns Ferry 2	1.25	1	1	1	1	3
Browns Ferry 3	1.25	1	1	1	1	3
Brunswick 1 & 2	1.25	1	1	1	1	3
Byron 1 & 2	3	1.25	1.25	1	1	1.5
Callaway	1.25	1.25	1.25	1.25	1	1.5
Calvert Cliffs 1 & 2	1.25	1	2	1.25	1.5	1.5
Catawba 1 & 2	1.25	1.25	1.25	1.25	1	1.5
Clinton 1	1.25	1	1	1	1	1.5
Columbia Nuclear	1.25	1	1	1	1	1.5
Comanche Peak 1 & 2	1.25	1.25	1.25	1.25	1	1.5
Cook 1 & 2	1.25	1.25	1.25	1.25	1	1.5
Cooper Station	1.25	1	1	1	1	3

	EPS	HPI		HRS/		RHR
	EDG	MDP Running or Alternating+	MDP Standby	MDP Standby	TDP **	MDP Standby
Crystal River 3	1.25	2	1	1	1	1.5
Davis-Besse	1.25	1.25	1.25	1	1.5	1.5
Diablo Canyon 1 & 2	2	1.25	1.25	1.25	1	1.5
Dresden 2 & 3	1.25	3	1	1	1	3
Duane Arnold	1.25	1	1	1	1	3
Farley 1 & 2	1.25	2	1	1.25	1	1.5
Fermi 2	1.25	1	1	1	1	3
Fitzpatrick	3	1	1	1	1	3
Fort Calhoun	1.25	1	2	1	1	1.5
Ginna	1.25	1	2	1.25	1	1.5
Grand Gulf	1.25	1	1	1	1	1.5
Harris	1.25	2	1	1.25	1	1.5
Hatch 1 & 2	2	1	1	1	1	3
Hope Creek	1.25	1	1	1	1	1.5
Indian Point 2	1.25	1	2	1.25	1	1.5
Indian Point 3	1.25	1	2	1.25	1	1.5
Kewaunee	1.25	1	1.25	1.25	1	1.5
LaSalle 1 & 2	1.25	1	1	1	1	1.5
Limerick 1 & 2	3	1	1	1	1	3
McGuire 1 & 2	1.25	1.25	1.25	1.25	1	1.5
Millstone 2	1.25	1	2	1.25	1	1.5
Millstone 3	1.25	2	1.25	1.25	1	1.5
Monticello	1.25	1	1	1	1	3
Nine Mile Point 1	1.25	3	1	1	1	1.5
Nine Mile Point 2	1.25	1	1	1	1	1.5
North Anna 1 & 2	1.25	2	1	1.25	1	1.5
Oconee 1, 2 & 3	3 *	2	1	1.25	1	1.5
Oyster Creek	1.25	1	3	1	1	1.5

	EPS	HPI		HRS/		RHR
	EDG	MDP Running or Alternating+	MDP Standby	MDP Standby	TDP **	MDP Standby
Palisades	1.25	1	1.25	1.25	1	1.5
Palo Verde 1, 2 & 3	1.25	1	1.25	1.25	1	1.5
Peach Bottom 2 & 3	2	1	1	1	1	3
Perry	1.25	1	1	1	1	1.5
Pilgrim	1.25	1	1	1	1	3
Point Beach 1 & 2	1.25	1	1.25	1.25	1	1.5
Prairie Island 1 & 2	1.25	1	1.25	1	1	1.5
Quad Cities 1 & 2	1.25	1	1	1	1	3
River Bend	1.25	1	1	1	1	1.5
Robinson 2	1.25	1	1.25	1.25	1	1.5
Salem 1 & 2	1.25	1.25	1.25	1.25	1	1.5
San Onofre 2 & 3	1.25	1	2	1.25	1	1.5
Seabrook	1.25	1.25	1.25	1	1	1.5
Sequoyah 1 & 2	1.25	1.25	1.25	1.25	1	1.5
South Texas 1 & 2	2	1	2	2	1	2
St. Lucie 1	1.25	1	1.25	1.25	1	1.5
St. Lucie 2	1.25	1	1.25	1.25	1	1.5
Summer	1.25	2	1	1.25	1	1.5
Surry 1 & 2	1.25	2	1	1.25	1	1.5
Susquehanna 1 & 2	3	1	1	1	1	3
Three Mile Island 1	1.25	2	1	1.25	1	1.5
Turkey Point 3 & 4	1.25	1	3	1.25	3	1.5
Vermont Yankee	1.25	1	1	1	1	3
Vogtle 1 & 2	1.25	1.25	1.25	1.25	1	1.5
Waterford 3	1.25	1	2	1.25	1	1.5
Watts Bar 1	1.25	1.25	1.25	1.25	1	1.5
Wolf Creek	1.25	1.25	1.25	1.25	1	1.5

1 * hydroelectric units ** as applicable

[+] Alternating pumps are redundant pumps where one pump is normally running, that are operationally rotated on a periodic basis.

	SWS			CCW		All	All
	MDP Running or Alternating	MDP Standby	DDP **	MDP Running or Alternating	MDP Standby	MOVs and Breakers	AOVs, SOVs, HOVs
All Plants	3	1.5	1.25	1.5	2	2	1.5

** as applicable

Plant Specific Common Cause Adjustment

The general form of a plant specific common cause adjustment factor is given by the equation:

$$A = \frac{\left[\left(\sum_{i=1}^{n} FVi\right) + FVcc\right]}{\sum_{i=1}^{n} FVi}. \qquad \text{Eq. 5}$$

Where:

n = is the number of components in a common cause group,

FV_i = the FV for independent failure of component i,

and

FV_{cc} = the FV for the common cause failure of components in the group.

In the expression above, the FV_i are the values for the specific failure mode for the component group that was chosen because it resulted in the maximum *[FV/UR]* ratio. The FV_{cc} is the FV that corresponds to all combinations of common cause events for that group of components for the same specific failure mode. Note that the FV_{cc} may be a sum of individual FV_{cc} values that represent different combinations of component failures in a common cause group.

For cooling water systems that have an initiator contribution, the FV values used should be from the non-initiator part of the model.

For example consider again a plant with three one hundred percent capacity emergency diesel generators. In this example, three failure modes for the EDG are modeled in the PRA, fail to start (FTS), fail to load (FTL) and fail to run (FTR). Common cause events exist for each of the three failure modes of the EDG in the following combinations:

1) Failure of all three EDGs,
2) Failure of EDG-A and EDG-B,
3) Failure of EDG-A and EDG-C,
4) Failure of EDG-B and EDG-C.

This results in a total of 12 common cause events.

Assume the maximum [FV/UR] resulted from the FTS failure mode, then the FV_{cc} used in equation 5 would be the sum of the four common cause FTS events for the combinations listed above.

It is recognized that there is significant variation in the methods used to model common cause. It is common that the 12 individual common cause events described above are combined into a fewer number of events in many PRAs. Correct application of the plant specific method would, in this case, require the decomposition of the combined events and their related FV values into the individual parts. This can be accomplished by application of the following proportionality:

$$FVpart = FVtotal \times \frac{URpart}{URtotal} \qquad \text{Eq. 6}$$

Returning to the example above, assume that common cause was modeled in the PRA by combining all failure modes for each specific combination of equipment modeled. Thus there would be four common cause events corresponding to the four possible equipment groupings listed above, but each of the common cause events would include the three failure modes FTS, FTL and FTR. Again, assume the FTS independent failure mode is the event that resulted in the maximum [FV/UR] ratio. The FVcc value to be used would be determined by determining the FTS contribution for each of the four common cause events. In the case of the event representing failure of all three EDGs this would be determined from

$$FVFTSABC = FVABC \times \frac{URFTSABC}{URABC}.$$

Where,

FV_{FTSABC} = the FV for the FTS failure mode and the failure of all three EDGs

FV_{ABC} = the event from the PRA representing the failure of all three EDGs due to all failure modes

UR_{FTSABC} = the failure probability for a FTS of all three EDGs, and

UR_{ABC} = the failure probability for all failure modes for the failure of all three EDGs.

After this same calculation was performed for the remaining three common cause events, the value for FV_{CC} to be used in equation 5 would then be calculated from:

$$FVcc = FVFTSABC + FVFTSAB + FVFTSAC + FVFTSBC$$

This value is used in equation 5 to determine the value of A. The final quantity used in equation 4 is given by:

$$[FV/UR]\max = A*[FV/UR]ind$$

In this case the individual values on the right hand side of the equation above are input to CDE.

2.3.3. Birnbaum Importance

One of the rules used for determining the valves and circuit breakers to be monitored in this performance indicator permitted the exclusion of valves and circuit breakers with a Birnbaum importance less than 1.0e-06. To apply this screening rule the Birnbaum importance is calculated from the values derived in this section as:

$$B = CDF*A*[FV/UR]_{ind} = CDF*[FV/UR]_{max}$$

Ensure that the support system initiator correction (if applicable) and the common cause correction are included in the Birnbaum value used to exclude components from monitoring.

2.3.4. Calculation of UR_{DBC}, UR_{LBC} and UR_{RBC}

Equation 3 includes the three quantities UR_{DBC}, UR_{LBC} and UR_{RBC} which are the Bayesian corrected plant specific values of unreliability for the failure modes fail on demand, fail to load and fail to run respectively. This section discusses the calculation of these values. As discussed in section 2.3 failure modes considered for each component type are provided below.

Valves and Breakers:
- Fail on Demand (Open/Close)

Pumps:
- Fail on Demand (Start)
- Fail to Run

Emergency Diesel Generators:
- Fail on Demand (Start)
- Fail to Load/Run
- Fail to Run

UR_{DBC} is calculated as follows.[5]

$$UR_{DBC} = \frac{(N_d + a)}{(a + b + D)}. \qquad \text{Eq. 7}$$

where in this expression:

N_d is the total number of failures on demand during the previous 12 quarters,

D is the total number of demands during the previous 12 quarters determined in section 2.2.1

The values a and b are parameters of the industry prior, derived from industry experience (see Table 4).

In the calculation of equation 7 the numbers of demands and failures is the sum of all demands and failures for similar components within each system. Do not sum across units for a multi-unit plant. For example, for a plant with two trains of Emergency Diesel Generators, the demands and failures for both trains would be added together for one evaluation of equation 7 -which would be used for both trains of EDGs.

UR_{LBC} is calculated as follows.

$$UR_{LBC} = \frac{(N_l + a)}{(a + b + D)}. \qquad \text{Eq. 8}$$

where in this expression:

[5] Atwood, Corwin L., Constrained noninformative priors in risk assessment, *Reliability Engineering and System Safety*, 53 (1996; 37-46)

Nl is the total number of failures to load (applicable to EDG only) during the previous 12 quarters,

D is the total number of load demands during the previous 12 quarters determined in section 2.2.1

The values *a* and *b* are parameters of the industry prior, derived from industry experience (see Table 4).

In the calculation of equation 8 the numbers of demands and failures is the sum of all demands and failures for similar components within each system.

UR_{RBC} is calculated as follows.

$$UR_{RBC} = \frac{(N_r + a)}{(T_r + b)} * T_m \qquad \text{Eq. 9}$$

where:

N_r is the total number of failures to run during the previous 12 quarters (determined in section 2.2.2),

T_r is the total number of run hours during the previous 12 quarters (determined in section 2.2.1)

T_m is the risk-significant mission time for the component based on plant specific PRA model assumptions. Where there is more than one mission time for different initiating events or sequences (e.g., turbine-driven AFW pump for loss of offsite power with recovery versus loss of feedwater), the longest mission time is to be used.

-and

a and *b* are parameters of the industry prior, derived from industry experience (see Table 4).

In the calculation of equation 9 the numbers of demands and run hours is the sum of all run hours and failures for similar components within each system. Do not sum across units for a multi-unit plant. For example, a plant with two trains of Emergency Diesel Generators, the run hours and failures for both trains would be added together for one evaluation of equation 9 which would be used for both trains of EDGs.

2.3.5. Baseline Unreliability Values

The baseline values for unreliability are contained in Table 4 and remain fixed.

Table 4. Industry Priors and Parameters for Unreliability

Component	Failure Mode	a [a]	b [a]	Industry MeanValue [b] URBLC

Component	Failure Mode	a [a]	b [a]	Industry MeanValue [b] URBLC
Circuit Breaker	Fail to open (or close)	4.99E-1	6.23E+2	8.00E-4
Hydraulic-operated valve	Fail to open (or close)	4.98E-1	4.98E+2	1.00E-3
Motor-operated valve	Fail to open (or close)	4.99E-1	7.12E+2	7.00E-4
Solenoid-operated valve	Fail to open (or close)	4.98E-1	4.98E+2	1.00E-3
Air-operated valve	Fail to open (or close)	4.98E-1	4.98E+2	1.00E-3
Motor-driven pump, standby	Fail to start	4.97E-1	2.61E+2	1.90E-3
	Fail to run	5.00E-1	1.00E+4	5.00E-5
Motor-driven pump, running or alternating	Fail to start	4.98E-1	4.98E+2	1.00E-3
	Fail to run	5.00E-1	1.00E+5	5.00E-6
Turbine-driven pump, AFWS	Fail to start	4.85E-1	5.33E+1	9.00E-3
	Fail to run	5.00E-1	2.50E+3	2.00E-4
Turbine-driven pump, HPCI or RCIC	Fail to start	4.78E-1	3.63E+1	1.30E-2
	Fail to run	5.00E-1	2.50E+3	2.00E-4
Diesel-driven pump, AFWS	Fail to start	4.80E-1	3.95E+1	1.20E-2
	Fail to run	5.00E-1	2.50E+3	2.00E-4
Emergency diesel generator	Fail to start	4.92E-1	9.79E+1	5.00E-3
	Fail to load/run	4.95E-1	1.64E+2	3.00E-3
	Fail to run	5.00E-1	6.25E+2	8.00E-4

NOTE: THIS TABLE IS SUBJECT TO UPDATE PRIOR TO IMPLEMENTATION

a.- A constrained, non-informative prior is assumed. For failure to run events, a = 0.5 and b = (a)/(mean rate). For failure upon demand events, a is a function of the mean probability:

Mean Probability	a
0.0 to 0.0025	0.50
>0.0025 to 0.010	0.49
>0.010 to 0.016	0.48
>0.016 to 0.023	0.47
>0.023 to 0.027	0.46

Then b = (a)(1.0 - mean probability)/(mean probability).

b.- Failure to run events occurring within the first hour of operation are included within the fail to start failure mode. Failure to run events occurring after the first hour of operation are included within the fail to run failure mode.

3. Establishing Statistical Significance

This performance indicator establishes an acceptable level of performance for the monitored systems that is reflected in the baseline reliability values in Table 4. Plant specific differences from this acceptable performance are interpreted in the context of the risk significance of the difference from the acceptable performance level. It is expected that a system that is performing at an acceptable performance level will see variations in performance over the monitoring period. For example a system may, on average, see three failures in a three year period at the accepted level of reliability. It is expected, due to normal performance variation, that this system will sometimes experience two or four failures in a three year period. It is not appropriate that a system should be placed in a white performance band due to expected variation in measured performance. This problem is most noticeable for risk sensitive systems that have few demands in the three year monitoring period.

This problem is resolved by applying a limit of 5.0e-07 to the magnitude of the most significant failure in a system. This ensures that one failure beyond the expected number of failures alone cannot result in MSPI > 1.0e-06. A MSPI > 1.0e-06 will still be a possible result if there is significant system unavailability, or failures in other components in the system.

This limit on the maximum value of the most significant failure in a system is only applied if the MSPI value calculated without the application of the limit is less than 1.0e-05.

This calculation will be performed by the CDE software;~~,~~ no additional input values are required.

4. Calculation of System Component Performance Limits

The mitigating systems chosen to be monitored are generally the most important systems in nuclear power stations. However, in some cases the system may not be as important at a specific station. This is generally due to specific features at a plant, such as diverse methods of achieving the same function as the monitored system. In these cases a significant degradation in performance could occur before the risk significance reached a point where the MSPI would cross the white boundary. In cases such as this it is not likely that the performance degradation would be limited to that one system and may well involve cross cutting issues that would potentially affect the performance of other mitigating systems.

A performance based criterion for determining declining performance is used as an additional decision criterion~~criteria~~ for determining that performance of a mitigating system has degraded to the white band. This decision is based on deviation of system performance from expected performance. The decision criterion was developed such that a system is placed in the white performance band when there is high confidence that system performance has degraded even though MSPI < 1.0e-06.

The criterion is applied to each component type in a system. If the number of failures in a 36 month period for a component type exceeds a performance based limit, then the system is considered to be performing at a white level, regardless of the MSPI calculated value. The performance based limit is calculated in two steps:

1. Determine the expected number of failures for a component type and
2. Calculate the performance limit from this value.

The expected number of failures is calculated from the relation

$$Fe = Nd * p + \lambda * Tr$$

Where:

N_d is the number of demands

p is the probability of failure on demand, from Table 4.

λ is the failure rate, from Table 4.

T_r is the runtime of the component

This value is used in the following expression to determine the maximum number of failures:

$$Fm = 4.65 * Fe + 4.2$$

If the actual number of failures (Fa) of a similar group of components (components that are grouped for the purpose of pooling data) within a system in a 36 month period exceeds Fm, then the system is placed in the white performance band or the level dictated by the MSPI calculation if the MSPI calculation is > 1E-5.

This calculation will be performed by the CDE software, no additional input values are required.

5. Additional Guidance for Specific Systems

This guidance describes typical system scopes and train determinations. Individual plants should include the systems and components employed at their plant that are necessary to satisfy the functions described in this section that have been determined to be risk significant per NUMARC 93-01 and are reflected in their PRAs.

Emergency AC Power Systems

Scope

The function monitored for the emergency AC power system is the ability of the emergency generators to provide AC power to the class 1E buses following a loss of off-site power. The emergency AC power system is typically comprised of two or more independent emergency generators that provide AC power to class 1E buses following a loss of off-site power. The emergency generator dedicated to providing AC power to the high pressure core spray system in BWRs is not within the scope of emergency AC power.

The EDG **component** boundary includes the generator body, generator actuator, lubrication system (local), fuel system (local or day tank), cooling components (local), startup air system receiver, exhaust and combustion air system, dedicated diesel battery (which is not part of the normal DC distribution system), individual diesel generator control system, cooling water isolation valves, circuit breaker for supply to safeguard buses and their associated control circuit. . Air compressors are not part of the EDG **component** boundary.

The fuel transfer pumps required to meet the PRA mission time are within the **system** boundary, but are not considered to be a monitored component for reliability monitoring in the EDG system. Additionally they are monitored for contribution to train unavailability only if an EDG

train can only be supplied from a single transfer pump. Where the capability exists to supply an EDG from redundant transfer pumps, the contribution to the EDG MSPI from these components is expected to be small compared to the contribution from the EDG itself. Monitoring the transfer pumps for reliability is not practical because accurate estimations of demands and run hours are not feasible (due to the auto start and stop feature of the pump) considering the expected small contribution to the index.

Emergency generators that are not safety grade, or that serve a backup role only (e.g., an alternate AC power source), are not included in the performance reporting.

Train Determination

The number of emergency AC power system trains for a unit is equal to the number of class 1E emergency generators that are available to power safe-shutdown loads in the event of a loss of off-site power for that unit. There are three typical configurations for EDGs at a multi-unit station:

1. EDGs dedicated to only one unit.
2. One or more EDGs are available to "swing" to either unit
3. All EDGs can supply all units

For configuration 1, the number of trains for a unit is equal to the number of EDGs dedicated to the unit. For configuration 2, the number of trains for a unit is equal to the number of dedicated EDGs for that unit plus the number of "swing" EDGs available to that unit (i.e., The "swing" EDGs are included in the train count for each unit). For configuration 3, the number of trains is equal to the number of EDGs.

Clarifying Notes

The emergency diesel generators are not considered to be available during the following portions of periodic surveillance tests unless recovery from the test configuration during accident conditions is virtually certain, as described in "Credit for operator recovery actions during testing," can be satisfied; or the duration of the condition is less than fifteen minutes per train at one time:

- Load-run testing
- Barring

An EDG is not considered to have failed due to any of the following events:

- spurious operation of a trip that would be bypassed in a loss of offsite power event
- malfunction of equipment that is not required to operate during a loss of offsite power event (e.g., circuitry used to synchronize the EDG with off-site power sources)
- failure to start because a redundant portion of the starting system was intentionally disabled for test purposes, if followed by a successful start with the starting system in its normal alignment

BWR High Pressure Injection Systems

(High Pressure Coolant Injection, High Pressure Core Spray, and Feedwater Coolant Injection)

Scope

These systems function at high pressure to maintain reactor coolant inventory and to remove decay heat.

The function monitored for the indicator is the ability of the monitored system to take suction from the suppression pool (and from the condensate storage tank, if required to meet the PRA success criteria and mission times) and inject into the reactor vessel. . The mitigation of ATWS events with a high pressure injection system is not considered a function to be monitored by the MSPI. (Note, however, that the FV values will include ATWS events).

Plants should monitor either the high-pressure coolant injection (HPCI), the high-pressure core spray (HPCS), or the feedwater coolant injection (FWCI) system, whichever is installed. The turbine and governor and associated piping and valves for turbine steam supply and exhaust are within the scope of the HPCI system. The flow path for the steam supply to a turbine driven pump is included from the steam source (main steam lines) to the pump turbine. The motor driven pump for HPCS and FWCI are in scope along with any valves that must change state such as low flow valves in FWCI. Valves in the feedwater line are not considered within the scope of these systems because they are normally open during operation and do not need to change state for these systems to operate. However waterside valves up to the feedwater line are in scope if they need to change state such as the HPCI injection valve.

The emergency generator dedicated to providing AC power to the high-pressure core spray system is included in the scope of the HPCS. The HPCS system typically includes a "water leg" pump to prevent water hammer in the HPCS piping to the reactor vessel. The "water leg" pump and valves in the "water leg" pump flow path are ancillary components and are not included in the scope of the HPCS system. Unavailability is not included while critical if the system is below steam pressure specified in technical specifications at which the system can be operated.

Oyster Creek

For Oyster Creek the design does not include any high pressure injection system beyond the normal feed water system. For the BWR high pressure injection system, Oyster Creek will monitor the Core Spray system, a low pressure injection system.

Train Determination

The HPCI and HPCS systems are considered single-train systems. The booster pump and other small pumps are ancillary components not used in determining the number of trains. The effect of these pumps on system performance is included in the system indicator to the extent their failure detracts from the ability of the system to perform its risk-significant function. For the FWCI system, the number of trains is determined by the number of feedwater pumps. The number of condensate and feedwater booster pumps are not used to determine the number of trains. It is recommended that the DG that provides dedicated power to the HPCS system be monitored as a separate “train” (or segment) for unavailability as the risk importance of the DG is less than the fluid parts of the system.

Reactor Core Isolation Cooling

(or Isolation Condenser)

Scope

This system functions at high pressure to remove decay heat. The RCIC system also functions to maintain reactor coolant inventory.

The function monitored for the indicator is the ability of the RCIC system to cool the reactor vessel core and provide makeup water by taking a suction from the suppression pool (and from the condensate storage tank, if required to meet the PRA success criteria and mission times) and inject into the reactor vessel

The Reactor Core Isolation Cooling (RCIC) system turbine, governor, and associated piping and valves for steam supply and exhaust are within the scope of the RCIC system. Valves in the feedwater line are not considered within the scope of the RCIC system because they are normally open during operation and do not have to change state for RCIC to perform its function.

The function monitored for the Isolation Condenser is the ability to cool the reactor by transferring heat from the reactor to the Isolation Condenser water volume. The Isolation Condenser and inlet valves are within the scope of Isolation Condenser system along with the connecting active valve for isolation condenser makeup. Unavailability is not included while critical if the system is below steam pressure specified in technical specifications at which the system can be operated.

Train Determination

The RCIC system is considered a single-train system. The condensate and vacuum pumps are ancillary components not used in determining the number of trains. The effect of these pumps on RCIC performance is included in the system indicator to the extent that a component failure results in an inability of the system to perform its risk-significant function.

For Isolation Condensers, a train is a flow path from the reactor to the isolation condenser back to the reactor. The connecting active valve for isolation condenser makeup is included in the train.

BWR Residual Heat Removal Systems

Scope

The function monitored for the BWR residual heat removal (RHR) system is the ability of the RHR system to provide suppression pool cooling. The pumps, heat exchangers, and associated piping and valves for this function are included in the scope of the RHR system. If an RHR system has pumps that do not perform a heat removal function (e.g. cannot connect to a heat exchanger, dedicated LPCI pumps) they are not included in the scope of this indicator.

Train Determination

The number of trains in the RHR system is determined as follows.- If the number of heat exchangers and pumps is the same, the number of heat exchangers determines the number of

trains. If the number of heat exchangers and pumps are different, the number of trains should be that used by the PRA model. Typically this would be two pumps and one heat exchanger forming a train where the train is unavailable only if both pumps are unavailable, or two pumps and one heat exchanger forming two trains with the heat exchanger as a shared component where a train is unavailable if a pump is unavailable and both trains are unavailable if the heat exchanger is unavailable.

PWR High Pressure Safety Injection Systems

Scope

These systems are used primarily to maintain reactor coolant inventory at high RCS pressures following a loss of reactor coolant. HPSI system operation involves transferring an initial supply of water from the refueling water storage tank (RWST) to cold leg piping of the reactor coolant system. Once the RWST inventory is depleted, recirculation of water from the reactor building emergency sump is required. The function monitored for HPSI is the ability of a HPSI train to take a suction from the primary water source (typically, a borated water tank), or from the containment emergency sump, and inject into the reactor coolant system.

The scope includes the pumps and associated piping and valves from both the refueling water storage tank and from the containment sump to the pumps, and from the pumps into the reactor coolant system piping. For plants where the high-pressure injection pump takes suction from the residual heat removal pumps, the residual heat removal pump discharge header isolation valve to the HPSI pump suction is included in the scope of HPSI system. Some components may be included in the scope of more than one train. For example, cold-leg injection lines may be fed from a common header that is supplied by both HPSI trains. In these cases, the effects of testing or component failures in an injection line should be reported in both trains.

Train Determination

In general, the number of HPSI system trains is defined by the number of high head injection paths that provide cold-leg and/or hot-leg injection capability, as applicable.

For Babcock and Wilcox (B&W) reactors, the design features centrifugal multi-stage pumps used for high pressure injection (about 2,500 psig) and no hot-leg injection path. Recirculation from the containment sump requires lining up the HPI pump suctions to the Low-Pressure Injection (LPI) pump discharges for adequate NPSH. This is typically a two-train system, with an installed spare pump (depending on plant-specific design) that can be aligned to either train.

For two-loop Westinghouse plants, the pumps operate at a lower pressure (about 1600 psig) and there may be a hot-leg injection path in addition to a cold-leg injection path (both are included as a part of the train).

For Westinghouse three-loop plants, the design features three centrifugal pumps that operate at high pressure (about 2500 psig), a cold-leg injection path through the BIT (with two trains of redundant valves), an alternate cold-leg injection path, and two hot-leg injection paths. One of the pumps is considered an installed spare. Recirculation is provided by taking suction from the RHR pump discharges. A train consists of a pump, the pump suction valves and boron injection tank (BIT) injection line valves electrically associated with the pump, and the associated hot-leg injection path. The alternate cold-leg injection path is required for recirculation, and should be

included in the train with which its isolation valve is electrically associated. This represents a two-train HPSI system.

For Four-loop Westinghouse plants, the design features two centrifugal pumps that operate at high pressure (about 2500 psig), two centrifugal pumps that operate at an intermediate pressure (about 1600 psig), a BIT injection path (with two trains of injection valves), a cold-leg safety injection path, and two hot-leg injection paths. Recirculation is provided by taking suction from the RHR pump discharges. Each of two high pressure trains is comprised of a high pressure centrifugal pump, the pump suction valves and BIT valves that are electrically associated with the pump. Each of two intermediate pressure trains is comprised of the safety injection pump, the suction valves and the hot-leg injection valves electrically associated with the pump. The cold-leg safety injection path can be fed with either safety injection pump, thus it should be associated with both intermediate pressure trains. This HPSI system is considered a four-train system for monitoring purposes.

For Combustion Engineering (CE) plants, the design features two or three centrifugal pumps that operate at intermediate pressure (about 1300 psig) and provide flow to four cold-leg injection paths or two hot-leg injection paths. In most designs, the HPSI pumps take suction directly from the containment sump for recirculation. In these cases, the sump suction valves are included within the scope of the HPSI system. This is a two-train system (two trains of combined cold-leg and hot-leg injection capability). One of the three pumps is typically an installed spare that can be aligned to either train or only to one of the trains (depending on plant-specific design).

PWR Auxiliary Feedwater Systems

Scope

The function of the AFW system is to provide decay heat removal via the steam generators to cool down and depressurize the reactor coolant system following a reactor trip. The mitigation of ATWS events with the AFW system is not considered a function to be monitored by the MSPI. (Note, however, that the FV values will include ATWS events).

The function monitored for the indicator is the ability of the AFW system to take a suction from a water source (typically, the condensate storage tank and if required to meet the PRA success criteria and mission time, from an alternate source) -and to inject into at least one steam generator.

The scope of the auxiliary feedwater (AFW) or emergency feedwater (EFW) systems includes the pumps and the components in the flow paths from the condensate storage tank and, if required, the valve(s) that connect the alternative water source to the auxiliary feedwater system. The flow path for the steam supply to a turbine driven pump is included from the steam source (main steam lines) to the pump turbine. Pumps included in the Technical Specifications (subject to a Limiting Condition for Operation) are included in the scope of this indicator. Some initiating events, such as a feedwater line break, may require isolation of AFW flow to the affected steam generator to prevent flow diversion from the unaffected steam generator. This function should be considered a monitored function if it is required.

Train Determination

The number of trains is determined primarily by the number of parallel pumps. For example, a system with three pumps is defined as a three-train system, whether it feeds two, three, or four injection lines, and regardless of the flow capacity of the pumps. Some components may be included in the scope of more than one train. For example, one set of flow regulating valves and isolation valves in a three-pump, two-steam generator system are included in the motor-driven pump train with which they are electrically associated, but they are also included (along with the redundant set of valves) in the turbine-driven pump train. In these instances, the effects of testing or failure of the valves should be reported in both affected trains. Similarly, when two trains provide flow to a common header, the effect of isolation or flow regulating valve failures in paths connected to the header should be considered in both trains.

PWR Residual Heat Removal System

Scope

The function monitored for the PWR residual heat removal (RHR) system is the long term decay heat removal function to mitigate those transients that cannot rely on the steam generators alone for decay heat removal. These typically include the low-pressure injection function and the recirculation mode used to cool and recirculate water from the containment sump following depletion of RWST inventory to provide decay heat removal. The pumps, heat exchangers, and associated piping and valves for those functions are included in the scope of the RHR system. Containment spray function should be included if it provides a risk significant decay heat removal function. Containment spray systems that only provide containment pressure control are not included.

CE Designed NSSS

CE ECCS designs differ from the description above.. CE designs run all ECCS pumps during the injection phase (Containment Spray (CS), High Pressure Safety Injection (HPSI), and Low Pressure Safety Injection (LPSI)), and on Recirculation Actuation Signal (RAS), the LPSI pumps are automatically shutdown, and the suction of the HPSI and CS pumps is shifted to the containment sump. The HPSI pumps then provide the recirculation phase core injection, and the CS pumps by drawing inventory out of the sump, cooling it in heat exchangers, and spraying the cooled water into containment, support the core injection inventory cooling.

For the RHR function the CE plant design uses HPSI to take a suction from the sump, CS to cool the fluid, and HPSI to inject at low pressure into the RCS. Due to these design differences, CE plants with this design should monitor this function in the following manner. The two containment spray pumps and associated coolers should be counted as two trains of RHR providing the recirculation cooling. Therefore, for the CE designed plants two trains should be monitored, as follows:

- Train 1 (recirculation mode) Consisting of the "A" containment spray pump, the required spray pump heat exchanger and associated flow path valves.
- Train 2 (recirculation mode) Consisting of the "B" containment spray pump, the required spray pump heat exchanger and associated flow path valves.

Surry, North Anna and Beaver Valley Unit 1

The at power RHR function, is provided by two 100% low head safety injection pumps taking suction from the containment sump and injecting to the RCS at low pressure and with the heat exchanger function (containment sump water cooling) provided by four 50% containment recirculation spray system pumps and heat exchangers.

The RHR Performance Indicator should be calculated as follows. The low head safety injection and recirculation spray pumps and associated coolers should be counted as two trains of RHR providing the -recirculation cooling, function as follows:

- "A" train consisting of the "A" LHSI pump, associated MOVS and the required "A" train recirculation spray pumps heat exchangers, and MOVS.
- "B" train consisting of the "B" LHSI pump, associated MOVS and the required "B" train recirculation spray pumps, heat exchangers, and MOVS.

Beaver Valley Unit 2

The at power RHR function, is provided by two 100% containment recirculation spray pumps taking suction from the containment sump, and injecting to the RCS at low pressure. The heat exchanger function is provided by two 100% capacity containment recirculation spray system heat exchangers, one per train. The RHR Performance Indicator should be calculated as follows. The two containment recirculation spray pumps and associated coolers should be counted as two trains of RHR providing the -recirculation cooling.

Two trains should be monitored as follows:

- Train 1 (recirculation mode) -Consisting of the containment recirculation spray pump associated MOVS and the required recirculation spray pump heat exchanger and MOVS.
- Train 2 (recirculation mode) -Consisting of containment recirculation spray pump associated MOVS and the required -recirculation spray pump heat exchanger, and MOVS.

Train Determination

The number of trains in the RHR system is determined by the number of parallel RHR heat exchangers. Some components are used to provide more than one function of RHR. If a component cannot perform as designed, rendering its associated train incapable of meeting one of the risk-significant functions, then the train is considered to be failed. Unavailable hours would be reported as a result of the component failure.

Cooling Water Support System

Scope

The functions monitored for the cooling water support system are those functions that are necessary (i.e. Technical Specification-required) to provide for direct cooling of the components in the other monitored systems. It does not include indirect cooling provided by room coolers or other HVAC features.

Systems that provide this function typically include service water and component cooling water or their cooling water equivalents. Pumps, valves, heat exchangers and line segments that are necessary to provide cooling to the other monitored systems are included in the system scope up to, but not including, the last valve that connects the cooling water support system to components in a single monitored system. This last valve is included in the other monitored system boundary. If the last valve provides cooling to SSCs in more than one monitored system, then it is -included in the cooling water support system. Service water systems are typically open "raw water" systems that use natural sources of water such as rivers, lakes or oceans. Component Cooling Water systems are typically closed "clean water" systems.

Valves in the cooling water support system that must close to ensure sufficient cooling to the other monitored system components to meet risk significant functions are included in the system boundary.

If a cooling water system provides cooling to only one monitored system, then it should be included in the scope of that monitored system. Systems that are dedicated to cooling RHR heat exchangers only are included in the cooling water support system scope.

Train Determination

The number of trains in the Cooling Water Support System will vary considerably from plant to plant. The way these functions are modeled in the plant-specific PRA will determine a logical approach for train determination. For example, if the PRA modeled separate pump and line segments, then the number of pumps and line segments would be the number of trains.

Clarifying Notes

Service water pump strainers, cyclone separators, and traveling screens are not considered to be monitored components and are therefore not part of URI. However, clogging of strainers and screens that render the train unavailable to perform its risk significant cooling function (which includes the risk-significant mission times) are included in UAI. Note, however, if the service water pumps fail due to a problem with the strainers, cyclone separators, or traveling screens, the failure is included in the URI.

Figure F-1

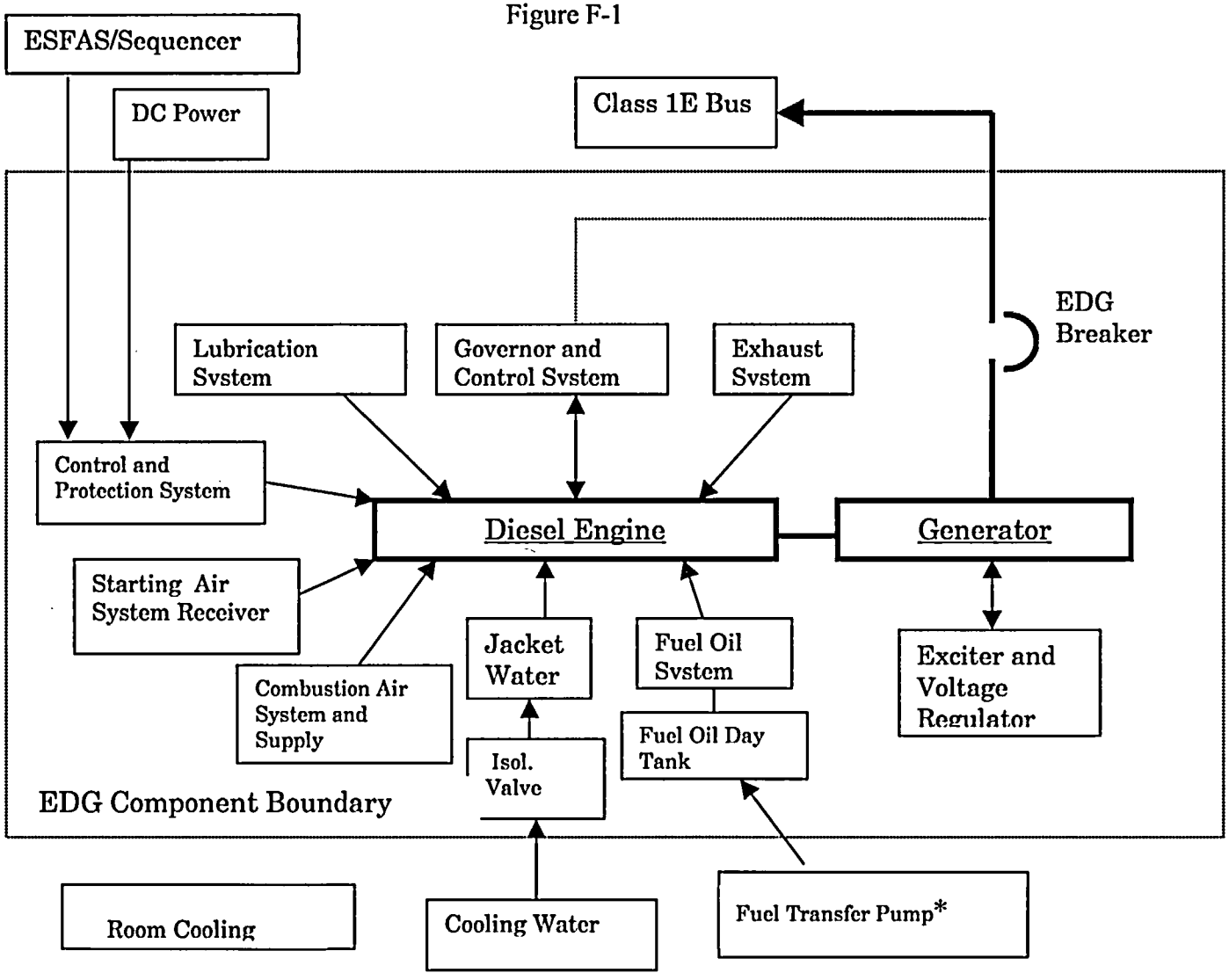

* The Fuel Transfer Pump is included in the EDG System Boundary. See Section 5 for monitoring requirements.

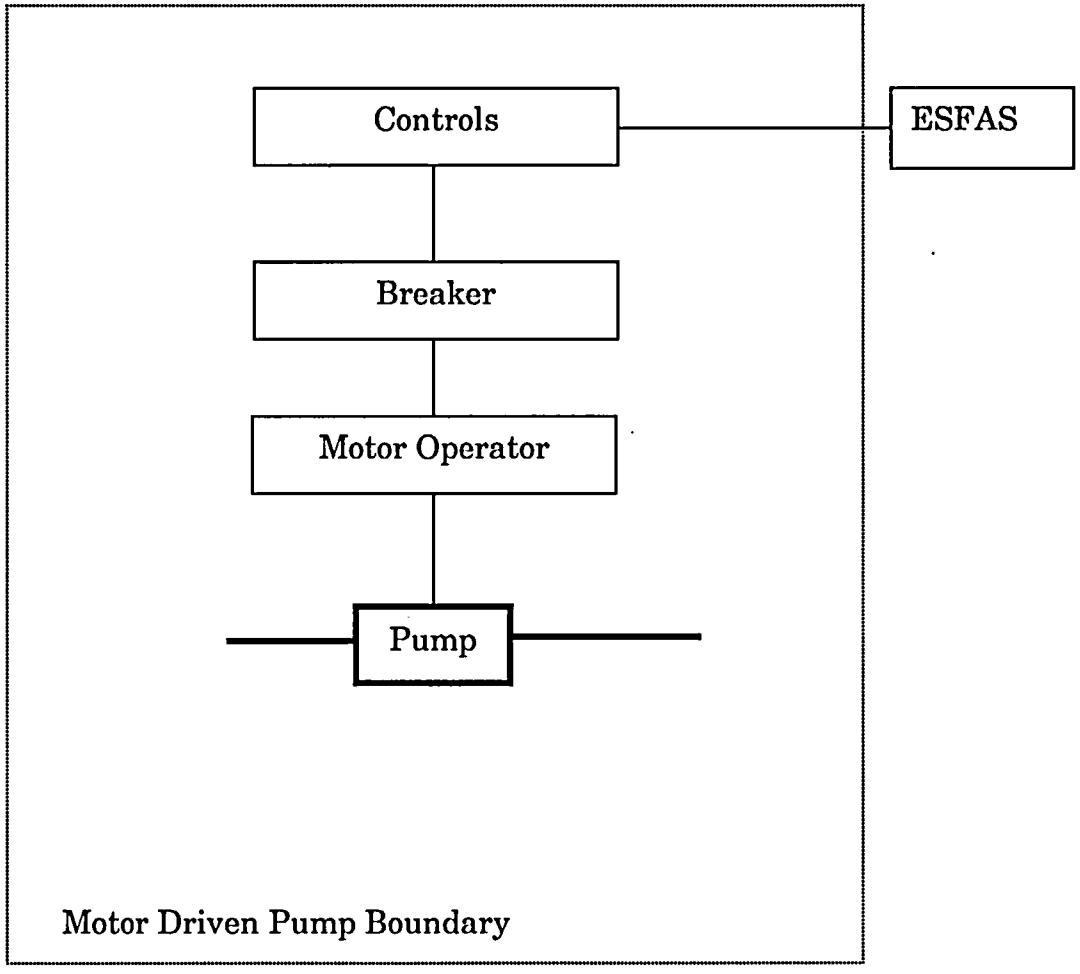
Controls
ESFAS
Breaker
Motor Operator
Pump
Motor Driven Pump Boundary

Figure F-2

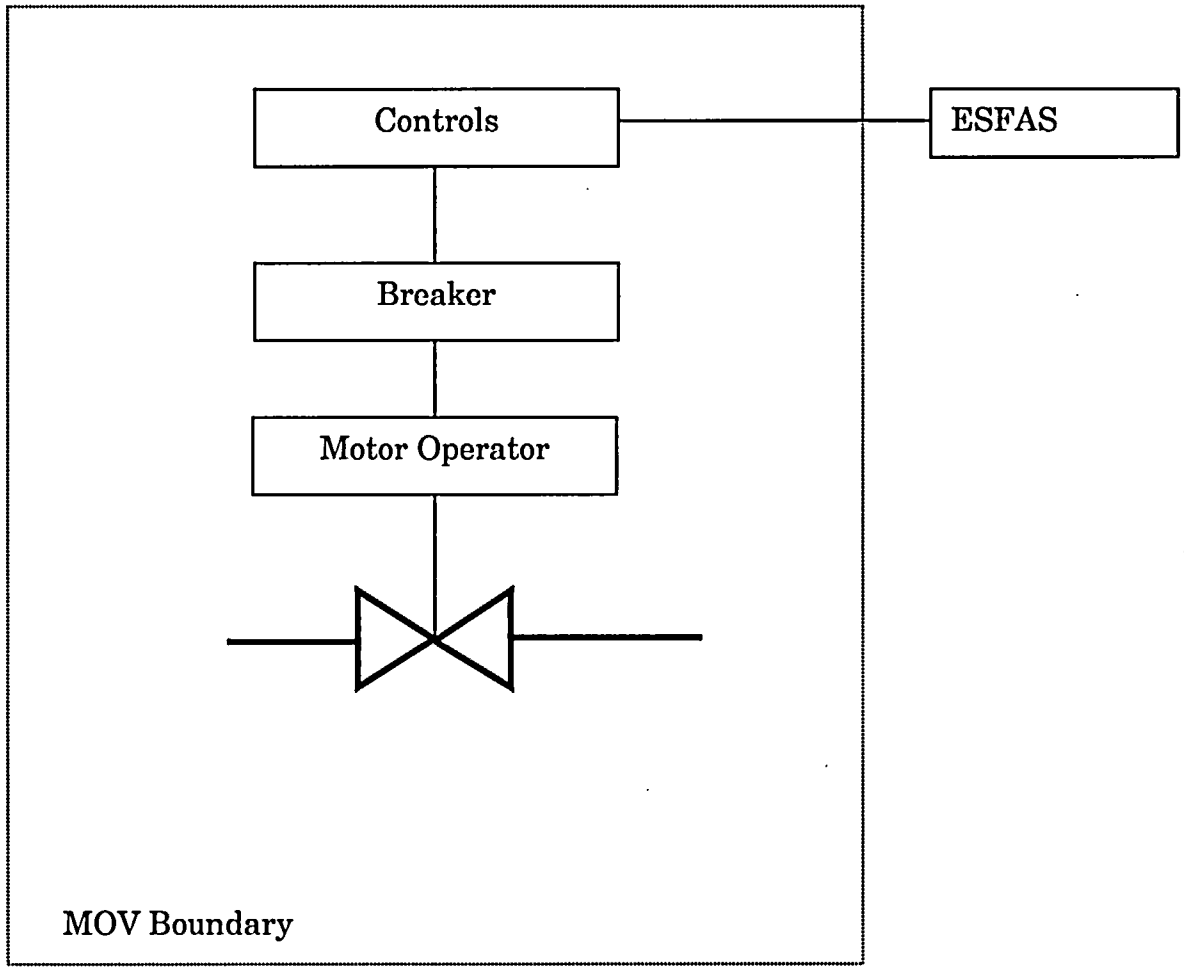

Figure F-3

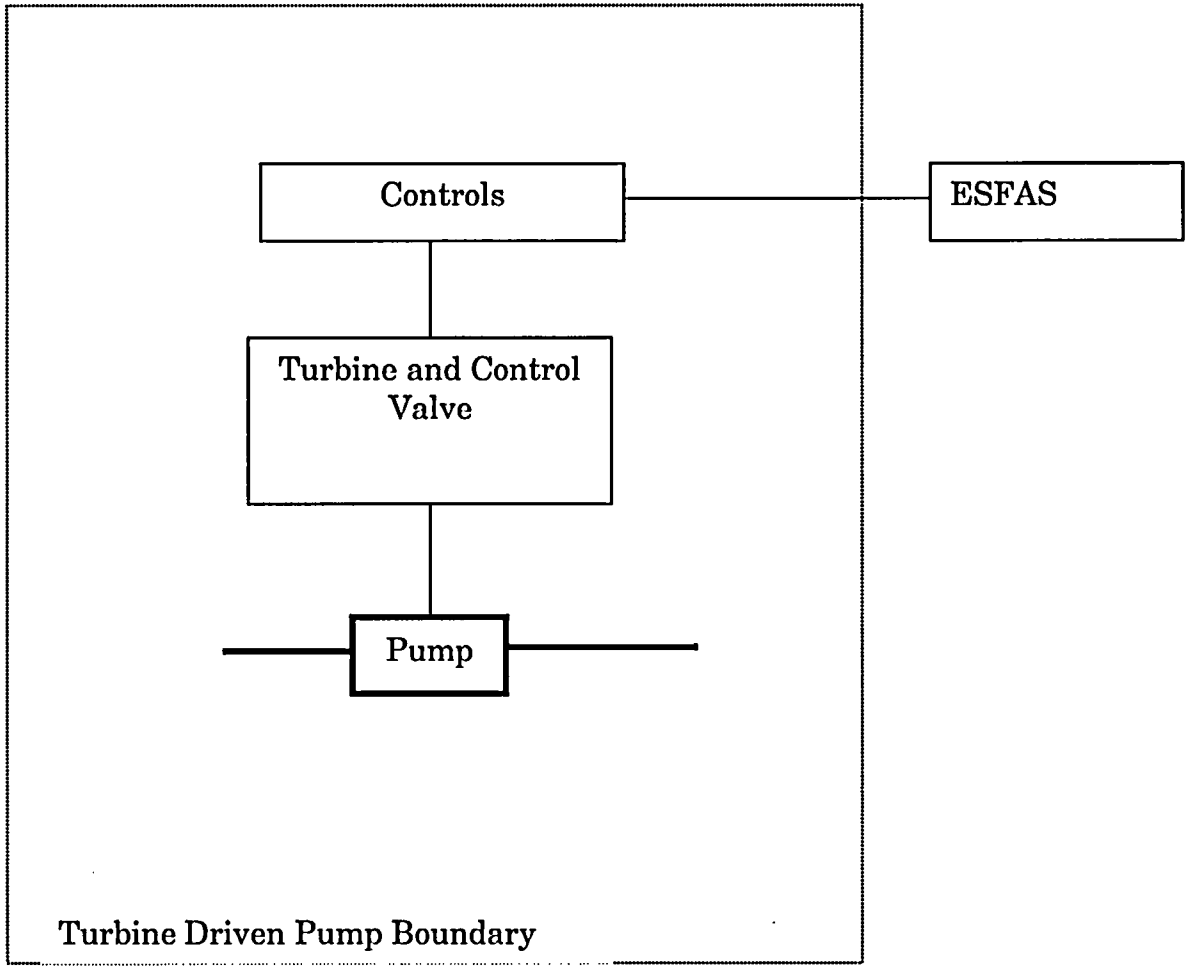
Controls
ESFAS
Turbine and Control Valve
Pump
Turbine Driven Pump Boundary

Figure F-4

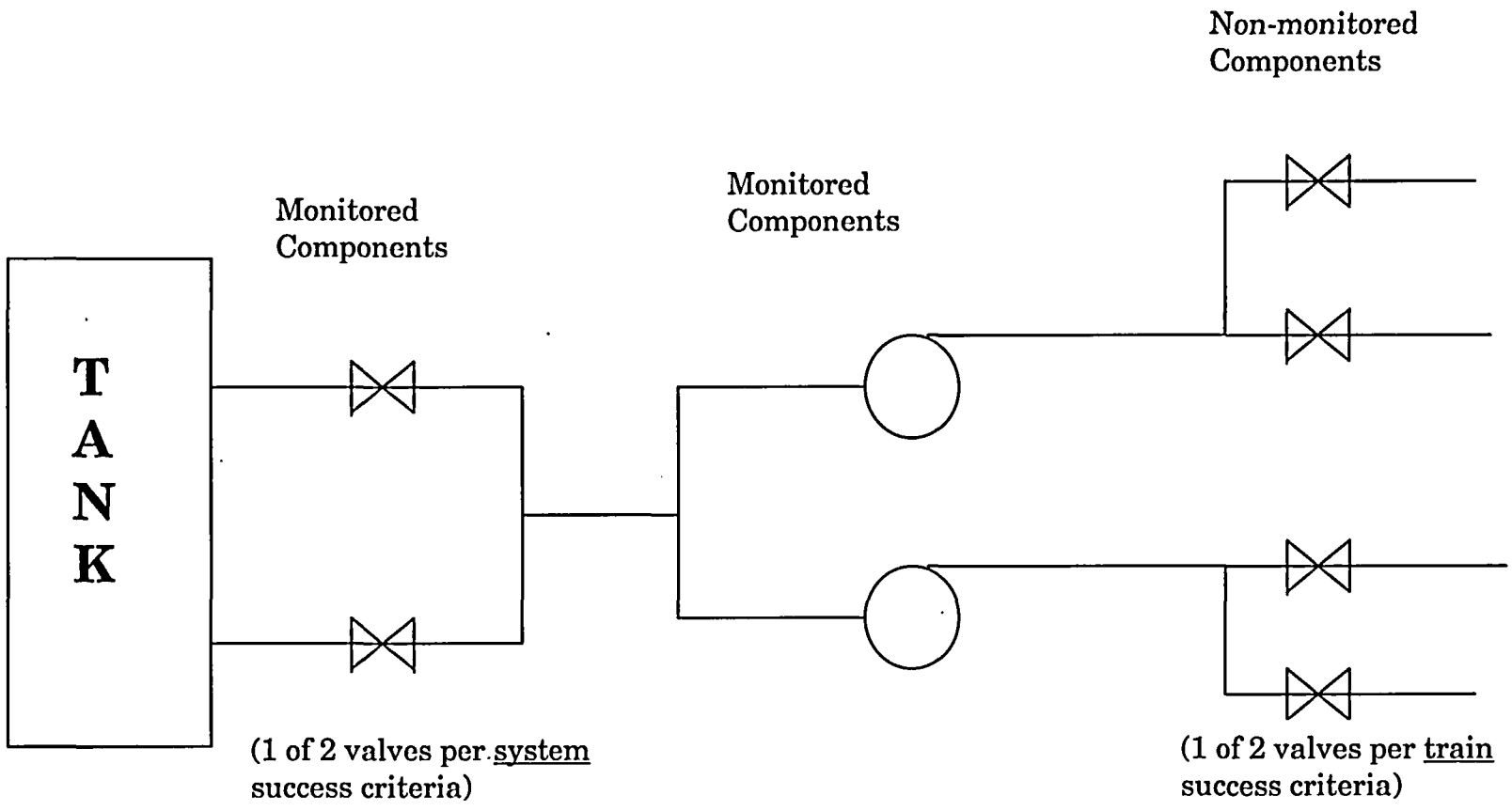
Non-monitored
Components
Monitored
Components
Monitored
Components
TANK
(1 of 2 valves per system
success criteria)
(1 of 2 valves per train
success criteria)

Figure F-5