ENERGY NORTHWEST
People·Vision·Solutions

P.O. Box 968 • Richland, WA • 99352-0968

September 6, 2005
GO2-05-151

U. S. Nuclear Regulatory Commission
ATTN: Document Control Desk
Washington, D.C. 20555-0001

Subject: **COLUMBIA GENERATING STATION, DOCKET NO. 50-397 INSERVICE INSPECTION SUMMARY REPORT FOR REFUELING OUTAGE R-17**

Dear Sir or Madam:

The Columbia Generating Station Inservice Inspection Summary Report for the R-17 Maintenance and Refueling Outage is enclosed. This report is submitted in accordance with Section XI of the American Society of Mechanical Engineers (ASME) Boiler and Pressure Vessel Code Article IWA-6240. Pursuant to ASME Code Section XI, Article IWA-6230, the NIS-1 Owner's Data Report for Inservice Inspection and NIS-2 Owner's Reports for repairs and replacements are included.

If you have any questions or desire additional information regarding this matter, please contact Mr. GV Cullen at (509) 377-6105.

Respectfully,

WS Oxenford
Vice President, Technical Services
Mail Drop PE04

Attachment: Columbia Generating Station ISI Summary Report

cc: BS Mallett – NRC RIV
BJ Benney – NRC NRR w/o
NRC Senior Resident Inspector/988C
RN Sherman – BPA/1399 w/o
WA Horin – Winston & Strawn w/o

A047

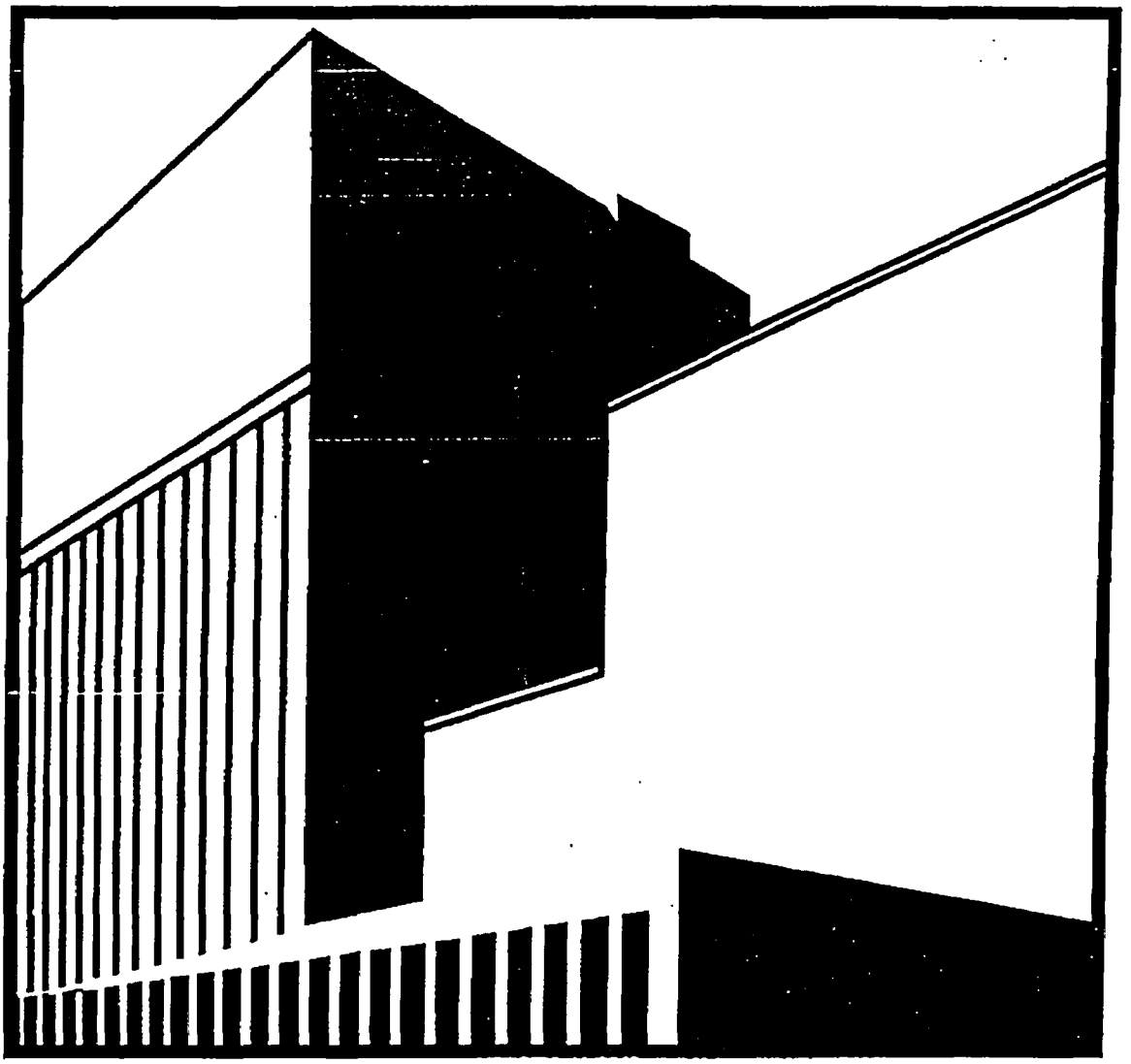

COLUMBIA GENERATING STATION
INSERVICE INSPECTION
SUMMARY REPORT
FOR REFUELING OUTAGE
R17

Spring, 2005

ENERGY NORTHWEST

People · Vision · Solutions

INSERVICE INSPECTION SUMMARY REPORT
FOR
SECOND INSPECTION INTERVAL
THIRD INSPECTION PERIOD
REFUELING OUTAGE R17

OWNER: Energy Northwest
Columbia Generating Station
North Power Plant Loop
Richland, Washington 99352

PLANT: Columbia Generating Station
North Power Plant Loop
Richland, Washington 99352

COMMERCIAL SERVICE DATE: December 13, 1984

CAPACITY: 3486 Megawatts Thermal

REACTOR PRESSURE VESSEL: Manufacturer: CBIN Serial Number: T-45
State No.: 29936-84W Nat'l Bd No.: 8

Prepared By: DPRamos 8/8/05
ISI Engineer Date

Pulakip Singh 8/8/05
Repair Replacement Program Lead Engineer Date

Reviewed & Concurred By: 8/8/05
NDE Lead Date

8/9/05
ISI Engineer's Supervisor Date

Concurrence: 8/9/05
Authorized Nuclear Inservice Inspector Date

SUMMARY

Columbia Generating Station has completed American Society of Mechanical Engineers Boiler and Pressure Vessel Code (ASME) Section XI examinations for the seventeenth (17) refueling outage.

This report summarizes the results of inservice inspection (ISI) of ASME Section III, Code Class 1 and 2 components performed at Columbia Generating Station between June 28, 2003 and June 11, 2005. General Electric (GE), S.G. Pinney and Energy Northwest personnel performed the examinations. During this period, Columbia Generating Station completed its seventeenth scheduled refueling outage, R17. This outage is the eighth refueling outage of the second inspection interval. This report includes a copy of the NIS-1 Owner's Report of Inservice Inspection for this refueling outage in Appendix A and copies of the NIS-2 Owner's Report of Repair or Replacement in Appendix B.

Documentation supporting this summary report is located in the Columbia Generating Station files (DIC 1100).

The ISI examinations are specified in ASME Section XI and required by 10CFR50.55a.

ASME SECTION XI EXAMINATIONS

The ASME Section XI examinations performed during the seventeenth refueling outage comply with the 1989 Edition with no Addenda, 1992 Edition through 1992 Addenda for subsection IWE, and 1995 Edition through 1996 Addenda for Appendix VIII.

A summary and the items examined for ASME Section XI requirements are included on the NIS-1 Owner's Data Report for Inservice Inspection. A copy is included as Appendix A.

COMPONENTS RECEIVING LESS THAN 90% CODE COVERAGE

The following components received less than 90% Code examination coverage.

Identification No.	Drawing No.	Description	Method	Percent Coverage	Existing Relief Request	Notes
10HPCS(1)-3	HPCS-101-2	Safe end extension to safe end	UT	85	No	No alternative exam
12RHR(1)A-14	RHR-105	Valve to safe end	UT	26	No	No alternative exam
12RHR(1)B-10	RHR-106	Valve to safe end	UT	29	No	No alternative exam
24RRC(1)B-11/8CAP-1	RRC-102-2	Sweep-o-let to cap	UT	50	No	No alternative exam
RRC(4)B-12	RRC-109	Safe end to valve	UT	24	No	No alternative exam
RRC-1C-1(W)	RRC-104	Component support attach. weld	MT	69	No	No alternative exam
MSH-54	MS-213-1		VT-3	70	No	No alternative exam
MSH-54(W)	MS-213-1	Component support attach. weld	VT-3	65	No	No alternative exam
MSH-38	MS-214-1		VT-3	70	No	No alternative exam
MSH-38(W)	MS-214-1	Component support attach. weld	VT-3	65	No	No alternative exam

Snubber Testing (ISI Program Plan Section 6.2.2)

An initial sample of thirty-seven (37) snubbers was selected from the Columbia Generating Station general population of 346 safety-related snubbers. These snubbers were randomly selected by computer subroutine that is part of the ISI System database. The selected snubbers were then reviewed to determine if the sample was representative, as required by Licensee Controlled Specification Basis SR 1.7.3.1.e.

Testing of snubbers was performed using portable test devices called "Validators", supplied by the snubber manufacturer. All testing results were acceptable. The snubbers tested are listed on the NIS-1 Owner's Report of Inservice Inspection form in Appendix A.

REPAIRS AND REPLACEMENTS

Eleven (11) significant ASME Section XI repair or replacement activities were performed during the R17 as listed below. A listing and NIS-2 Owner's Reports for these and other ASME Section XI repair or replacement work accomplished and closed out between June 28, 2003 and June 17, 2005 are provided in Appendix B.

1) Main Steam Relief Valves (MSRV's)

Refurbished three (3) main steam relief valves. These main steam relief valves were refurbished by NWS Technologies, LLC, 131 Venture Boulevard, Spartanburg, SC 29301. The refurbishment work was performed in accordance with NWS Technologies, LLC VR and NR programs. Replaced two (2) main steam relief valves.

2) Main Steam Isolation Valves (MSIV's)

Weld repaired the bore ID for valve MS-V-28A and refurbished bore ID for valve MS-V-22D. Replaced main disc and pilot disc for valves MS-V-22B, MS-V-22C, MS-V-28A and MS-V-28D.

3) Relief Valves

Replaced miscellaneous relief valves such as RCIC-RV-19T, SLC-RV-29A, SLC-RV-29B, RHR-RV-5, RHR-RV-25A, RHR-RV-25B, RHR-RV-25C, RHR-RV-88A, LPCS-RV-18, HPCS-RV-35, RCC-RV-34B, SW-RV-1A and SW-RV-1B.

4) Valves

Replaced miscellaneous valves such as LPCS-V-33, LPCS-V-34, HPCS-V-6, HPCS-V-7, RHR-V-84C, RHR-V-85C, EDR-V-18, FDR-V-3, FDR-V-4, FDR-V-15, RHR-V-53B, RRC-V-19 and MS-V-67D.

5) Service Water (SW) System

Performed the following work on the Service Water (SW) System:

Replaced carbon steel (CS) piping material with stainless steel (SS) piping material down stream of SW-FE-1A and SW-FE-1B. Repaired wasted surfaces down stream of valves SW-V-2A and SW-V-2B. Performed stainless steel (SS) weld overlay down stream of valves SW-V-2A and SW-V-2B.

6) Control Rod Drive (CRD) Assemblies

Performed the following work on the Control Rod Drive (CRD) assemblies:

Overhauled twenty seven (27) Control Rod Drive (CRD) assemblies. Replaced thirty (30) Control Rod Drive (CRD) assemblies. Installed replacement cap screws for all thirty (30) Control Rod Drive (CRD) assemblies bolted flanged connections - Eight (8) cap screws for each bolted flanged connection.

8) Local Power Range Monitoring (LPRM)

Replace Local Power Range Monitoring (LPRM) at core locations 16-17 and 32-09.

9) Supports

Replaced rigid struts with snubbers for supports MS-53, MS-56 and MS-1010N. Removed rigid struts for support MS-1009N. Replaced snubbers with rigid struts for support RRC-4470-3. Replaced snubbers for supports MS-96, MS-993N, MS-177, RRC-1549-62, MS-114, MS-996N, MSRV-3D-4, MS-145, MS-38, MSRV-1A-3, MD-1285-14C, MD-1285-14A, MS-151 and RHR-SA-51.

10) Restricting Orifice (RO) Plates

Fabricated and replaced restricting orifice (RO) plates for SW-FE-2A, SW-FE-2B, SW-FE-35A and HPCS-RO-6.

11) Pumps and Heat Exchangers

Replaced pump SW-P-1A. Replaced tube bundle for heat exchanger OG-HX-1B.

APPENDIX A

NIS-1 Owner's Report for Inservice Inspection

FORM NIS-1 OWNER'S DATA REPORT FOR INSERVICE INSPECTIONS

As required by the Provisions of the ASME Code Rules

1. **Owner:** Energy Northwest, Columbia Generating Station, North Power Plant Loop, Richland, Washington 99352
2. **Plant:** Columbia Generating Station, North Power Plant Loop, Richland, Washington
3. **Plant Unit:** Columbia Generating Station
4. **Owner Certificate of Authorization:** NA
5. **Commercial Service Date:** 12/13/84
6. **National Board Number:** NA
7. **Components Inspected**

Component or Appurtenance	Manufacturer or Installer	Manufacturer or Installer Serial No.	State or Province No.	National Board No.
RPV	CBIN Nuclear Company	T-45	29936-84W	CBIN-8
Large Bore Pipe	Bechtel - the piping examined is listed on pages 3-16 of this data report	NA	NA	NA
RRC-P-1A	Bingham-Willamette Pump Co.	210099 (1)	NA	134
RRC-P-1B	Bingham-Willamette Pump Co.	210100 (1)	NA	135
RCIC-P-1	Bingham-Willamette Pump Co.	B-2-1061	NA	161

Notes (1) Installers Number

FORM NIS-1 (back)

8. Examination Dates 6/28/03 to 6/11/05

9. Inspection Period Identification 3 10. Inspection Interval Identification 2

11. Applicable Edition of Section XI 1989 Addenda none

12. Date/Revision of Inspection Plan December 1994, Revision 0, change notices through 18

13. **Abstract of Examinations and Tests. Include a list of examinations and tests and a statement concerning status of work required for the Inspection Plan:**
96% of the examinations required for this interval have been completed. The remaining 4% are Code Class 2 and 3 pressure tests scheduled prior to end of interval and will be reported in the next summary report. See pages 3-16 of this data report for a listing of examinations and tests completed during this refueling outage. Continued on page 3.

14. **Abstract of Results of Examinations and Tests.** All examinations and tests were acceptable except the following:
1) Indications in RPV welds BG and BM exceed Table IWB-3510.1 criteria
2) Support RHR-506 spring setting exceeded 5% design setting
3) RRC-V-23A 60 dpm bonnet to body leak
4) RRC-V-67B 5 dpm bonnet to body leak

15. **Abstract of Corrective Measures:**
1) Engineering evaluation of BG and BM found indications acceptable
2) RHR-506 spring setting was reset to within acceptable range
3) RRC-V-23A bonnet re-torqued and found not leaking at operating temperature.
4) RRC-V-67B re-inspected at operating temperature and found not leaking.

We certify that a) statements made in this report are correct b) the examinations and tests meet the Inspection Plan as required by ASME Code, Section XI, and c) corrective measures taken conform to the rules of the ASME Code, Section XI.

Certificate of Authorization No. (if applicable) NA Expiration Date NA

Date 8/9/05 Signed Energy Northwest By
Owner

CERTIFICATE OF INSERVICE INSPECTION

I, the undersigned, holding a valid commission issued by the National Board of Boiler and Pressure Vessel Inspectors and the State of Washington and employed by Hartford Steam Boiler of Connecticut of Hartford, Connecticut have inspected the components described in this Owner's Data Report during the period 6/28/03 to 6/11/05, and state that to the best of my knowledge and belief, the Owner has performed examinations and taken corrective measures described in this Owner's Report in accordance with the Inspection Plan and as required by the ASME Code, Section XI.

By signing this certificate neither the Inspector nor his employer makes any warranty, expressed or implied, concerning the examinations, tests, and corrective measures described in this Owner's Report. Furthermore, neither the Inspector nor his employer shall be liable in any manner for any personal injury or property damage or loss of any kind arising from or connected with this inspection.

Inspector's Signature

Commissions 10655W NB 10655 A, B, N, I
National Board, State, Province, and Endorsements

Date 8/9/2005

1. Owner: Energy Northwest, 3000 George Washington Way, PO Box 968, Richland, Washington 99352
2. Plant: Columbia Generating Station, Hanford Reservation, Benton County, Washington
3. Plant Unit: Columbia Generating Station
4. Owner Certificate of Authorization: NA
5. Commercial Service Date: 12/13/84
6. National Board Number: NA

13. Abstract of Examinations and Tests (continued):

Snubber Functional Testing - IWF-5000

Snubber Mark Number	Position	Description	Serial No.	Test Date
DE-3	W	PSA-3 SNUBBER	3925	5/10/05
FPC-908N	E	PSA-1 SNUBBER	22347	5/9/05
LPCS-28	UA	PSA-3 SNUBBER	10615	5/9/05
MS-1369-12	UA	PSA-1/2 SNUBBER	429	5/13/09
MS-96	BM	PSA-10 SNUBBER	116	5/10/09
MS-45	UA	PSA-35 SNUBBER	8689	5/11/05
MS-1002N	S	PSA-10 SNUBBER	9946	5/11/05
MS-999N	UA	PSA-10 SNUBBER	9917	5/11/05
MSRV-4B-3	UA	PSA-10 SNUBBER	9932	5/12/05
MSRV-1C-2	UA	PSA-35 SNUBBER	10566	5/14/05
RCIC-961N	UA	PSA-1/4 SNUBBER	6229	5/9/05
RCIC-971N	UA	PSA-1 SNUBBER	603	5/9/05
RCIC-1490-13	UA	PSA-1/2 SNUBBER	2523	5/9/05
RFW-162	W	PSA-10 SNUBBER	132	5/12/05
RFW-942N	BM	PSA-1 SNUBBER	338	5/12/05
RFW-942N	TP	PSA-1 SNUBBER	339	5/12/05
RHR-287	UA	PSA-35 SNUBBER	8690	5/12/05
RHR-SB-38	UA	PSA-10 SNUBBER	705	5/13/05
RHR-SB-33	UA	PSA-10 SNUBBER	11851	5/12/05
RHR-357	UA	PSA-10 SNUBBER	9951	5/9/05
RHR-406	UA	PSA-3 SNUBBER	2588	5/9/05
RHR-67	UA	PSA-3 SNUBBER	475	5/9/05
RHR-121	W	PSA-10 SNUBBER	11860	5/9/05
RHR-943N	UA	PSA-3 SNUBBER	3900	5/10/09
RHR-945N	E	PSA-1 SNUBBER	130	5/10/09
RHR-558	UA	PSA-3 SNUBBER	4414	5/9/05
RHR-472	UA	PSA-3 SNUBBER	2574	5/10/09
RHR-502	UA	PSA-35 SNUBBER	6178	5/14/05
RHR-901N	S	PSA-3 SNUBBER	491	5/13/05
RHR-962N	UA	PSA-10 SNUBBER	123	5/9/05
RHR-1021N	W	PSA-3 SNUBBER	3947	5/10/09
RHR-290	UA	PSA-1/2 SNUBBER	362	5/10/09
RRC-SA-5	UA	PSA-100 SNUBBER	615	5/13/05
RRC-4470-31	UA	PSA-1 SNUBBER	356	5/16/05
RRC-1549-62	UA	PSA-1/4 SNUBBER	28430	5/10/09
SGT-23	TP	PSA-3 SNUBBER	4487	5/9/05
SW-29	SE	PSA-10 SNUBBER	4861	5/9/05

KEY

BM	Bottom	NE	Northeast	SE	Southeast	UA	Single snubber
E	East	NW	Northwest	S	South	W	West
N	North	SW	Southwest	TP	Top		

Notes to snubber functional testing

All snubber functional tests were acceptable. None of the tested snubbers require testing at the next refueling outage. Testing results are documented in plant procedure TSP-SNUBBER-R702.

Notes are on page 16

1. Owner: Energy Northwest, 3000 George Washington Way, PO Box 968, Richland, Washington 99352
2. Plant: Columbia Generating Station, Hanford Reservation, Benton County, Washington
3. Plant Unit: Columbia Generating Station
4. Owner Certificate of Authorization: NA
5. Commercial Service Date: 12/13/84
6. National Board Number: NA

13. Abstract of Examinations and Tests (continued):

Identification No.	Description	Diagram No.	Pg.	Method	Report No.	Date	Rslts(1)
Exam Category B-A							
Item Number B1.12							
BA	#1 SC VRT WD@45	RPV-101		VOL	G2KR17003	5/21/05	A
BB	#1 SC VRT W@135	RPV-101		VOL	G2KR17004	5/14/05	A
BC	#1 SC VRT W@225	RPV-101		VOL	G2KR17005	5/12/05	A
BD	#1 SC VRT W@315	RPV-101		VOL	G2KR17006	5/13/05	A
BE	#2 SC VRT W@ 10	RPV-101		VOL	G2KR17007	5/16/05	A
BF	#2 SC VRT W@100	RPV-101		VOL	G2KR17008	5/19/05	A
BG	#2 SC VRT W@190	RPV-101		VOL	G2KR17009	5/17/05	R(2)
BH	#2 SC VRT W@280	RPV-101		VOL	G2KR17010	5/16/05	A
BJ	#3 SC VRT W@ 50	RPV-101		VOL	G2KR17011	5/20/05	A
BK	#3 SC VRT W@170	RPV-101		VOL	G2KR17012	5/18/05	A
BM	#3 SC VRT W@290	RPV-101		VOL	G2KR17013	5/16/05	R(2)
Item Number B1.51							
MRP-1	REPAIR AREA	RPV-101		VOL	G2KR17014	5/16/05	A
MRP-4	REPAIR AREA	RPV-101		VOL	G2KR17028	5/20/05	A
Exam Category B-D							
Item Number B3.100							
N1-180-IR	RRC NZ-IR @ 180	RPV-101		VOL	G2KR17015	5/13/05	A
N2-90-IR	RRC NZ-IR @ 90	RPV-101		VOL	G2KR17016	5/18/05	A
N2-120-IR	RRC NZ-IR @ 120	RPV-101		VOL	G2KR17017	5/19/05	A
N2-150-IR	RRC NZ-IR @ 150	RPV-101		VOL	G2KR17018	5/20/05	A
N2-210-IR	RRC NZ-IR @ 210	RPV-101		VOL	G2KR17019	5/20/05	A
N2-240-IR	RRC NZ-IR @ 240	RPV-101		VOL	G2KR17020	5/20/05	A
N2-270-IR	RRC NZ-IR @ 270	RPV-101		VOL	G2KR17021	5/21/05	A
N2-300-IR	RRC NZ-IR @ 300	RPV-101		VOL	G2KR17022	5/21/05	A
N2-330-IR	RRC NZ-IR @ 330	RPV-101		VOL	G2KR17023	5/21/05	A
N6-315-IR	LPCI NZ-IR @315	RPV-101		VOL	G2KR17024	5/17/05	A
N9-105-IR	JP IN-NZ-IR@105	RPV-101		VOL	R17-038	5/15/05	A
N9-285-IR	JP IN-NZ-IR@285	RPV-101		VOL	R17-040	5/15/05	A
N10-180-IR	CRD NZ-IR@180	RPV-101		VOL	R17-042	5/15/05	A
N16-240-IR	HPCS NZ-IR @240	RPV-101		VOL	G2KR17025	5/15/05	A
Item Number B3.90							
N1-180	RRC NZ-V @ 180	RPV-101		VOL	G2KR17026	5/13/05	A
N2-90	RRC NZ-V @ 90	RPV-101		VOL	G2KR17027	5/18/05	A
N2-120	RRC NZ-V @ 120	RPV-101		VOL	G2KR17028	5/20/05	A
N2-150	RRC NZ-V @ 150	RPV-101		VOL	G2KR17029	5/20/05	A

Notes are on page 16

1. Owner: Energy Northwest, 3000 George Washington Way, PO Box 968, Richland, Washington 99352
2. Plant: Columbia Generating Station, Hanford Reservation, Benton County, Washington
3. Plant Unit: Columbia Generating Station
4. Owner Certificate of Authorization: NA
5. Commercial Service Date: 12/13/84
6. National Board Number: NA

13. Abstract of Examinations and Tests (continued):

Identification No.	Description	Diagram No.	Pg.	Method	Report No.	Date	Rslts(1)
N2-210	RRC NZ-V @ 210	RPV-101		VOL	G2KR17030	5/20/05	A
N2-240	RRC NZ-V @ 240	RPV-101		VOL	G2KR17031	5/21/05	A
N2-270	RRC NZ-V @ 270	RPV-101		VOL	G2KR17032	5/21/05	A
N2-300	RRC NZ-V @ 300	RPV-101		VOL	G2KR17033	5/21/05	A
N2-330	RRC NZ-V @ 330	RPV-101		VOL	G2KR17034	5/21/05	A
N4-150	FW NZ-V @ 150	RPV-101		VOL	G2KR17035	5/16/05	A
N4-210	FW NZ-V @ 210	RPV-101		VOL	G2KR17036	5/16/05	A
N4-270	FW NZ-V @ 270	RPV-101		VOL	G2KR17037	5/18/05	A
N4-330	FW NZ-V @ 330	RPV-101		VOL	G2KR17038	5/14/05	A
N6-315	LPCI NZ-V @ 315	RPV-101		VOL	G2KR17039	5/17/05	A
N9-105	JP IN-NZ-V @105	RPV-101		VOL	R17-037	5/15/05	A
N9-285	JP IN-NZ-V @285	RPV-101		VOL	R17-039	5/15/05	A
N10-180	CRD NZ-V @180	RPV-101		VOL	R17-041	5/15/05	A
N16-240	HPCS NZ-V @ 240	RPV-101		VOL	G2KR17040	5/15/05	A
Exam Category B-E							
Item Number B4.11							
N11	SLC BTM HD PEN	RPV-102		VT-2	01069241	6/3/05	A
N15	BTM HD DRAIN	RPV-102		VT-2	01069241	6/3/05	A
Item Number B4.12							
CRD	CRD PEN (185EA)	RPV-102		VT-2	01069241	6/3/05	A
Item Number B4.13							
N12	VESS INST PENT	RPV-101		VT-2	01069241	6/3/05	A
N13	VESS INST PENT	RPV-101		VT-2	01069241	6/3/05	A
N14	VESS INST PENT	RPV-101		VT-2	01069241	6/3/05	A
N17	FLG SEAL LK PEN	RPV-101		VT-2	01069241	6/3/05	A
INCORE	INCOR PEN(55EA)	RPV-102		VT-2	01069241	6/3/05	A
Exam Category B-F							
Item Number B5.10							
10HPCS(1)-4	SE TO NOZZLE	HPCS-101	02	VOL	APR-002	5/15/05	A
12RFW(1)AB-11	SE TO N4	RFW-101	04	VOL	APR-006	5/14/05	A
12RFW(1)AA-11	SE TO N4	RFW-101	03	VOL	APR-005	5/14/05	A
12LPCI(1)C-6	SE TO NOZZLE	RHR-103		VOL	APR-004	5/17/05	A
4JP(NZ)A-1	N-9 NZ-SE @ 105	RPV-101		VOL	R17-019	5/17/05	A
4JP(NZ)B-1	N9 NZ-SE @ 285	RPV-101		VOL	R17-021	5/17/05	A
24RRC(2)A-1	NOZ TO SE	RRC-101	01	VOL	APR-015	5/12/05	A
12RRC(1)-N2C-6	SE TO NOZ	RRC-101	06	VOL	APR-007	5/13/05	A

Notes are on page 16

1. Owner: Energy Northwest, 3000 George Washington Way, PO Box 968, Richland, Washington 99352
2. Plant: Columbia Generating Station, Hanford Reservation, Benton County, Washington
3. Plant Unit: Columbia Generating Station
4. Owner Certificate of Authorization: NA
5. Commercial Service Date: 12/13/84
6. National Board Number: NA

13. Abstract of Examinations and Tests (continued):

Identification No.	Description	Diagram No.	Pg.	Method	Report No.	Date	Rslts(1)
12RRC(1)-N2D-6	SE TO NOZ	RRC-101	05	VOL	APR-008	5/16/05	A
12RRC(1)-N2E-6	SE TO NOZ	RRC-101	04	VOL	APR-009	5/17/05	A
12RRC(1)-N2F-6	SE TO NOZ	RRC-102	08	VOL	APR-010	5/18/05	A
12RRC(1)-N2G-6	SE TO NOZ	RRC-102	07	VOL	APR-011	5/18/05	A
12RRC(1)-N2H-6	SE TO NOZ	RRC-102	06	VOL	APR-012	5/18/05	A
12RRC(1)-N2J-6	SE TO NOZ	RRC-102	05	VOL	APR-013	5/16/05	A
12RRC(1)-N2K-6	SE TO NOZ	RRC-102	04	VOL	APR-014	5/14/05	A
Item Number B5.130							
10HPCS(1)-3	SE EXT TO SE	HPCS-101	02	VOL	APR-001	5/16/05	A
12LPCI(1)C-5	SE EXT TO SE	RHR-103		VOL	APR-003	5/17/05	A
12RHR(1)A-14	VALVE TO SE	RHR-105		VOL	R17-010	5/11/05	A
12RHR(1)B-10	VLV TO SE	RHR-106		VOL	R17-012	5/21/05	A
4JP(NZ)A-2	N9 SE-PN SL@105	RPV-101		VOL	R17-020	5/17/05	A
4JP(NZ)B-2	N9 SE PN SL@285	RPV-101		VOL	R17-022	5/17/05	A
4RRC(4)B-12	SE TO VALVE	RRC-109		VOL	R17-023	5/12/05	A
Exam Category B-G-1							
Item Number B6.10							
RPV NUT 36-1-7A	RPV NUT	RPV-101		VOL	2RPU-016	5/15/05	A
RPV NUT 36-1-7A	RPV NUT	RPV-101		VT-1	2RPV-022	5/18/05	A
RPV NUT 36-1-14A	RPV NUT	RPV-101		VOL	2RPU-016	5/18/05	A
RPV NUT 36-1-14A	RPV NUT	RPV-101		VT-1	2RPV-022	5/18/05	A
RPV NUT 36-1-21A	RPV NUT	RPV-101		VOL	2RPU-016	5/18/05	A
RPV NUT 36-1-21A	RPV NUT	RPV-101		VT-1	2RPV-022	5/18/05	A
RPV NUT 36-1-28A	RPV NUT	RPV-101		VOL	2RPU-016	5/18/05	A
RPV NUT 36-1-28A	RPV NUT	RPV-101		VT-1	2RPV-022	5/18/05	A
RPV NUT 36-1-35A	RPV NUT	RPV-101		VOL	2RPU-016	5/18/05	A
RPV NUT 36-1-35A	RPV NUT	RPV-101		VT-1	2RPV-022	5/18/05	A
RPV NUT 36-1-42A	RPV NUT	RPV-101		VOL	2RPU-016	5/18/05	A
RPV NUT 36-1-42A	RPV NUT	RPV-101		VT-1	2RPV-022	5/18/05	A
RPV NUT 36-1-47A	RPV NUT	RPV-101		VOL	2RPU-016	5/18/05	A
RPV NUT 36-1-47A	RPV NUT	RPV-101		VT-1	2RPV-022	5/18/05	A
RPV NUT 36-1-49A	RPV NUT	RPV-101		VOL	2RPU-016	5/18/05	A
RPV NUT 36-1-49A	RPV NUT	RPV-101		VT-1	2RPV-022	5/18/05	A
RPV NUT 36-1-55A	RPV NUT	RPV-101		VOL	2RPU-016	5/18/05	A
RPV NUT 36-1-55A	RPV NUT	RPV-101		VT-1	2RPV-022	5/18/05	A
RPV NUT 36-1-63A	RPV NUT	RPV-101		VOL	2RPU-016	5/18/05	A
RPV NUT 36-1-63A	RPV NUT	RPV-101		VT-1	2RPV-022	5/18/05	A
RPV NUT 36-1-70A	RPV NUT	RPV-101		VOL	2RPU-016	5/18/05	A
RPV NUT 36-1-70A	RPV NUT	RPV-101		VT-1	2RPV-022	5/18/05	A

Notes are on page 16

1. Owner: Energy Northwest, 3000 George Washington Way, PO Box 968, Richland, Washington 99352
2. Plant: Columbia Generating Station, Hanford Reservation, Benton County, Washington
3. Plant Unit: Columbia Generating Station
4. Owner Certificate of Authorization: NA
5. Commercial Service Date: 12/13/84
6. National Board Number: NA

13. Abstract of Examinations and Tests (continued):

Identification No.	Description	Diagram No.	Pg.	Method	Report No.	Date	Rslts(1)
Item Number B6.180							
RRC-P-1A-BLT	PUMP STUDS	RRC-103		VOL	R17-033	5/11/05	A
RRC-P-1A-BLT	PUMP STUDS	RRC-103		VT-1	2RRV-017	5/11/05	A
RRC-P-1B-BLT	PUMP STUDS	RRC-103		VOL	R17-034	5/10/05	A
RRC-P-1B-BLT	PUMP STUDS	RRC-103		VT-1	2RRV-011	5/11/05	A
Item Number B6.200							
RRC-P-1A-NUT/WASH	PUMP NUTS, WASH	RRC-103		VT-1	2RRV-018	5/11/05	A
RRC-P-1B-NUT/WASH	PUMP NUTS, WASH	RRC-103		VT-1	2RRV-010	5/11/05	A
Item Number B6.210							
RRC-V-60A-BLT	VALVE STUDS	RRC-101	02	VOL	R17-035	5/10/05	A
RRC-V-60A-BLT	VALVE STUDS	RRC-101	02	VT-1	2RRV-013	5/11/05	A
Item Number B6.230							
RRC-V-60A-NUT/WASH	VALVE NUTS, WASH	RRC-101	02	VT-1	2RRV-012	5/11/05	A
Item Number B6.40							
RPV THREADS	THREADS-RPV FLG	RPV-101		VOL	2RPU-015	5/9/05	A
Item Number B6.50							
RPV WASHER 35-1-7A	RPV WASHER	RPV-101		VT-1	2RPV-022	5/18/05	A
RPV WASHER 35-1-14A	RPV WASHER	RPV-101		VT-1	2RPV-022	5/18/05	A
RPV WASHER 35-1-21A	RPV WASHER	RPV-101		VT-1	2RPV-022	5/18/05	A
RPV WASHER 35-1-28A	RPV WASHER	RPV-101		VT-1	2RPV-022	5/18/05	A
RPV WASHER 35-1-35A	RPV WASHER	RPV-101		VT-1	2RPV-022	5/18/05	A
RPV WASHER 35-1-42A	RPV WASHER	RPV-101		VT-1	2RPV-022	5/18/05	A
RPV WASHER 35-1-49A	RPV WASHER	RPV-101		VT-1	2RPV-022	5/18/05	A
RPV WASHER 35-1-56A	RPV WASHER	RPV-101		VT-1	2RPV-022	5/18/05	A
RPV WASHER 35-1-63A	RPV WASHER	RPV-101		VT-1	2RPV-022	5/18/05	A
RPV WASHER 35-1-70A	RPV WASHER	RPV-101		VT-1	2RPV-022	5/18/05	A
RPV BUSHING	RPV BUSHING	RPV-101		VT-1	2RPV-021	5/9/05	A
Exam Category B-G-2							
Item Number B7.50							
6RCIC(1)-28BD	FLANGE BOLTING	RCIC-102	02	VT-1	2RIV-015	5/25/05	A

Notes are on page 16

1. Owner: Energy Northwest, 3000 George Washington Way, PO Box 968, Richland, Washington 99352
2. Plant: Columbia Generating Station, Hanford Reservation, Benton County, Washington
3. Plant Unit: Columbia Generating Station
4. Owner Certificate of Authorization: NA
5. Commercial Service Date: 12/13/84
6. National Board Number: NA

13. Abstract of Examinations and Tests (continued):

Identification No.	Description	Diagram No.	Pg.	Method	Report No.	Date	Rslts(1)
6RCIC(1)-31BU	FLANGE BOLTING	RCIC-102	03	VT-1	2RIV-014	5/25/05	A
4RRC(8)2A-2BD	FLANGE BOLTING	RRC-101	01	VT-1	2RRV-014	5/11/05	A
4RRC(8)1A-2BD	FLANGE BOLTING	RRC-101	02	VT-1	2RRV-015	5/11/05	A
Item Number B7.70							
MS-V-22A-BLT	VALVE BOLTING	MS-101	02	VT-1	2MSV-161	5/18/05	A
MS-V-28A-BLT	VALVE BOLTING	MS-101	02	VT-1	5-05-27-1	5/17/05	A
MS-V-28A-BLT	VALVE BOLTING	MS-101	02	VT-1	5-05-28-1	5/17/05	A
MS-V-28A-BLT	VALVE BOLTING	MS-101	02	VT-1	2MSV-162	5/24/05	A
MS-V-28D-BLT	VALVE BOLTING	MS-104	02	VT-1	2MSV-156	8/11/04	A
MS-V-28D-BLT	VALVE BOLTING	MS-104	02	VT-1	2MSV-157	8/11/04	A
RCIC-V-13-BLT	VALVE BOLTING	RCIC-102	01	VT-1	2RIV-013	4/12/05	A
RCIC-V-65-BLT	VALVE BOLTING	RCIC-102	01	VT-1	2RIV-012	4/12/05	A
RHR-V-42C-BLT	VALVE BOLTING	RHR-103		VT-1	2RHV-024	5/3/05	A
RHR-V-41C-BLT	VALVE BOLTING	RHR-103		VT-1	2RHV-025	5/26/05	A
RHR-V-111C-BLT	VALVE BOLTING	RHR-103		VT-1	2RHV-026	5/26/05	A
RRC-V-67A-BLT	VALVE BOLTING	RRC-101	02	VT-1	2RRV-016	5/11/05	A
Exam Category B-J							
Item Number B9.11							
24RFW(1)B-5	VALVE TO PIPE	RFW-102	01	VOL	R17-013	5/29/05	A
12RFW(1)BF-10	ELL TO PIPE	RFW-102	05	VOL	R17-009	5/15/05	A
12RFW(1)BE-7	ELL TO PIPE	RFW-102	04	VOL	R17-008	5/15/05	A
12RFW(1)BD-7	ELL TO PIPE	RFW-102	03	VOL	R17-007	5/15/05	A
12RHR(1)B-1	VLV TO PEN	RHR-106		VOL	R17-011	5/24/05	A
24RRC(2)B-3	PIPE TO ELL	RRC-102	01	VOL	R17-015	5/12/05	A
12RRC(1)-N2F-1A	PIPE TO PIPE	RRC-102	08	VOL	R17-044	5/15/05	A
12RRC(1)-N2G-1A	PIPE TO PIPE	RRC-102	07	VOL	R17-045	5/15/05	A
12RRC(1)-N2J-1A	PIPE TO PIPE	RRC-102	05	VOL	R17-043	5/15/05	A
12RRC(1)-N2K-1A	PIPE TO PIPE	RRC-102	04	VOL	R17-046	5/15/05	A
Item Number B9.31							
24RRC(1)B-11/8CAP-1	SWL TO CAP	RRC-102	02	VOL	R17-014	5/12/05	A
Exam Category B-K-1							
Item Number B10.10							
MS-HA-2(W)	4 WELDED LUGS	MS-101	02	SUR	2MSM-060	5/18/05	A
RFW-162(W)	6 WELDED LUGS	RFW-102	01	SUR	2FWM-020	5/16/05	A
RFW-183(W)	4 WELDED LUGS	RFW-102	03	SUR	2FWM-019	5/16/05	A
RHR-231(W)	4 WELDED LUGS	RHR-101		SUR	2RHM-084	4/20/05	A

Notes are on page 16

1. Owner: Energy Northwest, 3000 George Washington Way, PO Box 968, Richland, Washington 99352
2. Plant: Columbia Generating Station, Hanford Reservation, Benton County, Washington
3. Plant Unit: Columbia Generating Station
4. Owner Certificate of Authorization: NA
5. Commercial Service Date: 12/13/84
6. National Board Number: NA

13. Abstract of Examinations and Tests (continued):

Identification No.	Description	Diagram No.	Pg.	Method	Report No.	Date	Rslts(1)
RHR-483(W)	4 WELDED LUGS	RHR-102		SUR	2RHM-085	5/3/05	A
RRC-1C-1(W)	8 WELDED LUGS	RRC-104		SUR	2RRM-002	5/24/05	A
Exam Category B-M-2							
Item Number B12.50							
MS-V-28D-BDY	VALVE BODY	MS-104	02	VT-3	2MSV-151	8/10/04	A
MS-V-28D-BDY	VALVE BODY	MS-104	02	VT-3	2MSV-154	8/10/04	A
Exam Category B-N-1							
Item Number B13.10							
RPV INTERIOR	RPV INTERIOR	RPV-101		VT-3	CGS05MJ161	5/26/05	A
TOP HEAD INTERIOR	TOP HEAD	RPV-102		VT-3	2RPV-023	5/22/05	A
Exam Category B-N-2							
Item Number B13.20							
RPV INTERIOR ATTACH	TOP HEAD ATTACH	RPV-101		VT-3	2RPV-023	5/22/05	A
RPV INTERIOR ATTACH	INTERIOR ATTACH	RPV-101		VT-1	CGS05MJ161	5/26/05	A
Exam Category B-P							
Item Number B15.11							
RPV-PB-101(H)	HYDRO PRES BNDR	RPV-101		VT-2	01069241	6/3/05	A
RPV-PB-102(H)	HYDRO PRES BNDR	RPV-102		VT-2	01069241	6/3/05	A
Item Number B15.51							
HPCS-PB-101(H)	HYDRO PRES BNDR	HPCS-101		VT-2	01069241	6/3/05	A
LPCS-PB-101(H)	HYDRO PRES BNDR	LPCS-101		VT-2	01069241	6/3/05	A
MS-PB-101(H)	HYDRO PRES BNDR	MS-101		VT-2	01069241	6/3/05	A
MS-PB-102(H)	HYDRO PRES BNDR	MS-102		VT-2	01069241	6/3/05	A
MS-PB-103(H)	HYDRO PRES BNDR	MS-103		VT-2	01069241	6/3/05	A
MS-PB-104(H)	HYDRO PRES BNDR	MS-104		VT-2	01069241	6/3/05	A
MS-PB-105(H)	HYDRO PRES BNDR	MS-105		VT-2	01069241	6/3/05	A
MS-PB-106(H)	HYDRO PRES BNDR	MS-106		VT-2	01069241	6/3/05	A
RCIC-PB-101(H)	HYDRO PRES BNDR	RCIC-101		VT-2	01069241	6/3/05	A
RCIC-PB-102(H)	HYDRO PRES BNDR	RCIC-102		VT-2	01069241	6/3/05	A
RFW-PB-101(H)	HYDRO PRES BNDR	RFW-101		VT-2	01069241	6/3/05	A
RFW-PB-102(H)	HYDRO PRES BNDR	RFW-102		VT-2	01069241	6/3/05	A
RFW-PB-103(H)	HYDRO PRES BNDR	RFW-103		VT-2	01069241	6/3/05	A
RHR-PB-101(H)	HYDRO PRES BNDR	RHR-101		VT-2	01069241	6/3/05	A
RHR-PB-102(H)	HYDRO PRES BNDR	RHR-102		VT-2	01069241	6/3/05	A

Notes are on page 16

1. Owner: Energy Northwest, 3000 George Washington Way, PO Box 968, Richland, Washington 99352
2. Plant: Columbia Generating Station, Hanford Reservation, Benton County, Washington
3. Plant Unit: Columbia Generating Station
4. Owner Certificate of Authorization: NA
5. Commercial Service Date: 12/13/84
6. National Board Number: NA

13. Abstract of Examinations and Tests (continued):

Identification No.	Description	Diagram No.	Pg.	Method	Report No.	Date	Rslts(1)
RHR-PB-103(H)	HYDRO PRES BNDR	RHR-103		VT-2	01069241	6/3/05	A
RHR-PB-104(H)	HYDRO PRES BNDR	RHR-104		VT-2	01081939	5/9/05	A
RHR-PB-105(H)	HYDRO PRES BNDR	RHR-105		VT-2	01069241	6/3/05	A
RHR-PB-106(H)	HYDRO PRES BNDR	RHR-106		VT-2	01069241	6/3/05	A
RRC-PB-101(H)	HYDRO PRES BNDR	RRC-101		VT-2	01069241	6/3/05	A
RRC-PB-102(H)	HYDRO PRES BNDR	RRC-102		VT-2	01069241	6/3/05	A
RRC-PB-104(H)	HYDRO PRES BNDR	RRC-104		VT-2	01069241	6/3/05	A
RRC-PB-105(H)	HYDRO PRES BNDR	RRC-105		VT-2	01069241	6/3/05	A
RRC-PB-106(H)	HYDRO PRES BNDR	RRC-106		VT-2	01069241	6/3/05	A
RRC-PB-107(H)	HYDRO PRES BNDR	RRC-107		VT-2	01069241	6/3/05	A
RRC-PB-108(H)	HYDRO PRES BNDR	RRC-108		VT-2	01069241	6/3/05	A
RRC-PB-109(H)	HYDRO PRES BNDR	RRC-109		VT-2	01069241	6/3/05	A
RRC-PB-110(H)	HYDRO PRES BNDR	RRC-110		VT-2	01069241	6/3/05	A
RRC-PB-111(H)	HYDRO PRES BNDR	RRC-111		VT-2	01069241	6/3/05	A
RWCU-PB-101(H)	HYDRO PRES BNDR	RWCU-101		VT-2	01069241	6/3/05	A
SLC-PB-101(H)	HYDRO PRES BNDR	SLC-101		VT-2	01081938	5/28/05	A
Item Number B15.61							
RRC-P-1A-BDY(H)	HYDRO PRES BNDRY	RRC-103		VT-2	01069241	6/3/05	A
RRC-P-1B-BDY(H)	HYDRO PRES BNDRY	RRC-103		VT-2	01069241	6/3/05	A
RRC-PB-103(H)	HYDRO PRES BNDR	RRC-103		VT-2	01069241	6/3/05	A
Item Number B15.71							
HPCS-V-4-BDY(H)	HYDRO PRES TEST	HPCS-101	01	VT-2	01069241	6/3/05	A
HPCS-V-51-BDY(H)	HYDRO PRES TEST	HPCS-101	02	VT-2	01069241	6/3/05	A
LPCS-V-5-BDY(H)	HYDRO PRES TEST	LPCS-101	01	VT-2	01069241	6/3/05	A
LPCS-V-6-BDY(H)	HYDRO PRES TEST	LPCS-101	02	VT-2	01069241	6/3/05	A
LPCS-V-51-BDY(H)	HYDRO PRES TEST	LPCS-101	02	VT-2	01069241	6/3/05	A
MS-RV-4A-BDY(H)	HYDRO PRES TEST	MS-101	01	VT-2	01069241	6/3/05	A
MS-RV-3A-BDY(H)	HYDRO PRES TEST	MS-101	01	VT-2	01069241	6/3/05	A
MS-RV-2A-BDY(H)	HYDRO PRES TEST	MS-101	01	VT-2	01069241	6/3/05	A
MS-RV-1A-BDY(H)	HYDRO PRES TEST	MS-101	01	VT-2	01069241	6/3/05	A
MS-V-22A-BDY(H)	HYDRO PRES TEST	MS-101	02	VT-2	01069241	6/3/05	A
MS-V-28A-BDY(H)	HYDRO PRES TEST	MS-101	02	VT-2	01069241	6/3/05	A
MS-RV-5B-BDY(H)	HYDRO PRES TEST	MS-102	01	VT-2	01069241	6/3/05	A
MS-RV-4B-BDY(H)	HYDRO PRES TEST	MS-102	01	VT-2	01069241	6/3/05	A
MS-RV-3B-BDY(H)	HYDRO PRES TEST	MS-102	01	VT-2	01069241	6/3/05	A
MS-RV-2B-BDY(H)	HYDRO PRES TEST	MS-102	01	VT-2	01069241	6/3/05	A
MS-RV-1B-BDY(H)	HYDRO PRES TEST	MS-102	01	VT-2	01069241	6/3/05	A
MS-V-22B-BDY(H)	HYDRO PRES TEST	MS-102	02	VT-2	01069241	6/3/05	A
MS-V-28B-BDY(H)	HYDRO PRES TEST	MS-102	02	VT-2	01069241	6/3/05	A
MS-RV-5C-BDY(H)	HYDRO PRES TEST	MS-103	01	VT-2	01069241	6/3/05	A

Notes are on page 16

1. Owner: Energy Northwest, 3000 George Washington Way, PO Box 968, Richland, Washington 99352
2. Plant: Columbia Generating Station, Hanford Reservation, Benton County, Washington
3. Plant Unit: Columbia Generating Station
4. Owner Certificate of Authorization: NA
5. Commercial Service Date: 12/13/84
6. National Board Number: NA

13. Abstract of Examinations and Tests (continued):

Identification No.	Description	Diagram No.	Pg.	Method	Report No.	Date	Rslts(1)
MS-RV-4C-BDY(H)	HYDRO PRES TEST	MS-103	01	VT-2	01069241	6/3/05	A
MS-RV-3C-BDY(H)	HYDRO PRES TEST	MS-103	01	VT-2	01069241	6/3/05	A
MS-RV-2C-BDY(H)	HYDRO PRES TEST	MS-103	01	VT-2	01069241	6/3/05	A
MS-RV-1C-BDY(H)	HYDRO PRES TEST	MS-103	01	VT-2	01069241	6/3/05	A
MS-V-22C-BDY(H)	HYDRO PRES TEST	MS-103	02	VT-2	01069241	6/3/05	A
MS-V-28C-BDY(H)	HYDRO PRES TEST	MS-103	02	VT-2	01069241	6/3/05	A
MS-RV-4D-BDY(H)	HYDRO PRES TEST	MS-104	01	VT-2	01069241	6/3/05	A
MS-RV-3D-BDY(H)	HYDRO PRES TEST	MS-104	01	VT-2	01069241	6/3/05	A
MS-RV-2D-BDY(H)	HYDRO PRES TEST	MS-104	01	VT-2	01069241	6/3/05	A
MS-RV-1D-BDY(H)	HYDRO PRES TEST	MS-104	01	VT-2	01069241	6/3/05	A
MS-V-22D-BDY(H)	HYDRO PRES TEST	MS-104	02	VT-2	01069241	6/3/05	A
MS-V-28D-BDY(H)	HYDRO PRES TEST	MS-104	02	VT-2	01069241	6/3/05	A
RCIC-V-63-BDY(H)	HYDRO PRES TEST	RCIC-101	01	VT-2	01069241	6/3/05	A
RCIC-V-64-BDY(H)	HYDRO PRES TEST	RCIC-101	01	VT-2	06019241	6/3/05	A
RHR-V-23-BDY(H)	HYDRO PRES TEST	RCIC-102	01	VT-2	01069241	6/3/05	A
RHR-V-19-BDY(H)	HYDRO PRES TEST	RCIC-102	01	VT-2	01069241	6/3/05	A
RCIC-V-13-BDY(H)	HYDRO PRES TEST	RCIC-102	01	VT-2	01069241	6/3/05	A
RCIC-V-65-BDY(H)	HYDRO PRES TEST	RCIC-102	01	VT-2	01069241	6/3/05	A
RCIC-V-66-BDY(H)	HYDRO PRES TEST	RCIC-102	03	VT-2	01069241	6/3/05	A
RFW-V-65A-BDY(H)	HYDRO PRES TEST	RFW-101	01	VT-2	01069241	6/3/05	A
RFW-V-32A-BDY(H)	HYDRO PRES TEST	RFW-101	01	VT-2	010069241	6/3/05	A
RFW-V-10A-BDY(H)	HYDRO PRES TEST	RFW-101	01	VT-2	01069241	6/3/05	A
RFW-V-11A-BDY(H)	HYDRO PRES TEST	RFW-101	01	VT-2	1069241	6/3/05	A
RFW-V-65B-BDY(H)	HYDRO PRES TEST	RFW-102	01	VT-2	01069241	6/3/05	A
RFW-V-32B-BDY(H)	HYDRO PRES TEST	RFW-102	01	VT-2	01069241	6/3/05	A
RFW-V-10B-BDY(H)	HYDRO PRES TEST	RFW-102	01	VT-2	01069241	6/3/05	A
RFW-V-11B-BDY(H)	HYDRO PRES TEST	RFW-102	01	VT-2	1069241	6/3/05	A
RWCU-V-40-BDY(H)	HYDRO PRES TEST	RFW-103		VT-2	01069241	6/3/05	A
RHR-V-42A-BDY(H)	HYDRO PRES TEST	RHR-101		VT-2	01069241	6/3/05	A
RHR-V-41A-BDY(H)	HYDRO PRES TEST	RHR-101		VT-2	01069241	6/3/05	A
RHR-V-111A-BDY(H)	HYDRO PRES TEST	RHR-101		VT-2	01069241	6/3/05	A
RHR-V-42B-BDY(H)	HYDRO PRES TEST	RHR-102		VT-2	01069241	6/3/05	A
RHR-V-41B-BDY(H)	HYDRO PRES TEST	RHR-102		VT-2	01069241	6/3/05	A
RHR-V-111B-BDY(H)	HYDRO PRES TEST	RHR-102		VT-2	01069241	6/3/05	A
RHR-V-42C-BDY(H)	HYDRO PRES TEST	RHR-103		VT-2	01069241	6/3/05	A
RHR-V-41C-BDY(H)	HYDRO PRES TEST	RHR-103		VT-2	01069241	6/3/05	A
RHR-V-111C-BDY(H)	HYDRO PRES TEST	RHR-103		VT-2	01069241	6/3/05	R
RHR-V-113-BDY(H)	HYDRO PRES TEST	RHR-104		VT-2	01069241	6/3/05	A
RHR-V-9-BDY(H)	HYDRO PRES TEST	RHR-104		VT-2	01069241	6/3/05	A
RHR-V-8-BDY(H)	HYDRO PRES TEST	RHR-104		VT-2	01069241	6/3/05	A
RHR-V-53A-BDY(H)	HYDRO PRES TEST	RHR-105		VT-2	01069241	6/3/05	A
RHR-V-50A-BDY(H)	HYDRO PRES TEST	RHR-105		VT-2	01069241	6/3/05	A
RHR-V-112A-BDY(H)	HYDRO PRES TEST	RHR-105		VT-2	01069241	6/3/05	A
RHR-V-53B-BDY(H)	HYDRO PRES TEST	RHR-106		VT-2	01069241	6/3/05	A

Notes are on page 16

1. Owner: Energy Northwest, 3000 George Washington Way, PO Box 968, Richland, Washington 99352
2. Plant: Columbia Generating Station, Hanford Reservation, Benton County, Washington
3. Plant Unit: Columbia Generating Station
4. Owner Certificate of Authorization: NA
5. Commercial Service Date: 12/13/84
6. National Board Number: NA

13. Abstract of Examinations and Tests (continued):

Identification No.	Description	Diagram No.	Pg.	Method	Report No.	Date	Rslts(1)
RHR-V-50B-BDY(H)	HYDRO PRES TEST	RHR-106		VT-2	01069241	6/3/05	A
RHR-V-112B-BDY(H)	HYDRO PRES TEST	RHR-106		VT-2	01069241	6/3/05	A
RRC-V-23A-BDY(H)	HYDRO PRES TEST	RRC-101	01	VT-2	01069241	6/3/05	R(3)
RRC-V-60A-BDY(H)	HYDRO PRES TEST	RRC-101	02	VT-2	01069241	6/3/05	A
RRC-V-67A-BDY(H)	HYDRO PRES TEST	RRC-101	02	VT-2	01069241	6/3/05	A
RRC-V-23B-BDY(H)	HYDRO PRES TEST	RRC-102	01	VT-2	01069241	6/3/05	A
RRC-V-60B-BDY(H)	HYDRO PRES TEST	RRC-102	02	VT-2	01069241	6/3/05	A
RRC-V-67B-BDY(H)	HYDRO PRES TEST	RRC-102	02	VT-2	01069241	6/3/05	R(4)
RWCU-V-102-BDY(H)	HYDRO PRES TEST	RWCU-101	02	VT-2	01069241	6/3/05	A
RWCU-V-1-BDY(H)	HYDRO PRES TEST	RWCU-101	04	VT-2	01069241	6/3/05	A
RWCU-V-4-BDY(H)	HYDRO PRES TEST	RWCU-101	05	VT-2	01069241	6/3/05	A
Exam Category C-F-2							
Item Number C5.51							
6CRD(12)A-4	ELL TO PIPE	CRD-201	01	VOL	R17-025	5/2/05	A
6CRD(12)A-7	PIPE TO TEE	CRD-201	01	VOL	R17-026	5/2/05	A
8CRD(12)A-3	ELL TO ELL	CRD-201	01	VOL	R17-031	5/3/05	A
6CRD(12)A-12	PIPE TO ELL	CRD-201	01	VOL	R17-024	5/2/05	A
8CRD(12)A-13	PIPE TO TEE	CRD-201	02	VOL	R17-027	5/2/05	A
8CRD(12)A-15	ELL TO PIPE	CRD-201	02	VOL	R17-028	5/2/05	A
8CRD(12)A-18	PIPE TO ELL	CRD-201	03	VOL	R17-029	5/2/05	A
8CRD(12)A-19	ELL TO PIPE	CRD-201	03	VOL	R17-030	5/2/05	A
24HPCS(2)-5	ELBOW TO PIPE	HPCS-201	01	VOL	R17-006	4/28/05	A
24HPCS(2)-17	FLANGE TO PIPE	HPCS-201	02	VOL	R17-005	4/28/05	A
16LPCS(1)-35	FLANGE TO ELL	LPCS-202	05	VOL	R17-001	4/18/05	A
26MS(1)B-19A	PIPE TO PIPE	MS-202	01	VOL	R17-016	5/23/05	A
26MS(1)B-20	PIPE TO PIPE	MS-202	01	VOL	R17-017	5/23/05	A
26MS(1)C-20	PIPE TO PIPE	MS-203	01	VOL	R17-018	5/23/05	A
Item Number C5.81							
8CRD(12)A-18/2FLG	PIPET TO EL	CRD-201	03	SUR	2CRM-003	5/2/05	A
Exam Category C-G							
Item Number C6.10							
RCIC-P-1S	PMP NOZZLE WELD	RCIC-204	04	SUR	2RIP-001	4/12/05	A
Exam Category C-H							
Item Number C7.40							

Notes are on page 16

1. Owner: Energy Northwest, 3000 George Washington Way, PO Box 968, Richland, Washington 99352
2. Plant: Columbia Generating Station, Hanford Reservation, Benton County, Washington
3. Plant Unit: Columbia Generating Station
4. Owner Certificate of Authorization: NA
5. Commercial Service Date: 12/13/84
6. National Board Number: NA

13. Abstract of Examinations and Tests (continued):

Identification No.	Description	Diagram No.	Pg.	Method	Report No.	Date	Rslts(1)
CRD-PB-201(H)	HYDRO PRES BNDR	CRD-201		VT-2	01081940	5/7/05	A
CRD-PB-202(H)	HYDRO PRES BNDR	CRD-202		VT-2	01081940	5/7/05	A
HPCS-PB-201(H)	HYDRO PRES BNDR	HPCS-201		VT-2	01068919	5/27/04	A
HPCS-PB-202(H)	HYDRO PRES BNDR	HPCS-202		VT-2	01068919	5/27/04	A
RCC-PB-201(H)	HYDRO PRES BNDR	RCC-201		VT-2	01069241	6/3/05	A
RCC-PB-202(H)	HYDRO PRES BNDR	RCC-202		VT-2	01069241	6/3/05	A
RHR-PB-205(H)	HYDRO PRES BNDR	RHR-205		VT-2	01081939	5/9/05	A
Exam Category D-A							
Item Number D1.20							
MSH-54(W)	ATTACH WELD	MS-213	01	VT-3	2MSV-160	5/10/05	A
MSH-38(W)	ATTACH WELD	MS-214	01	VT-3	2MSV-159	5/10/05	A
Exam Category D-B							
Item Number D2.10							
CCH-PB-301(H)	HYDRO PRES BNDR	CCH-301		VT-2	01022984	10/9/03	A
CCH-PB-302(H)	HYDRO PRES BNDR	CCH-302		VT-2	01022984	10/9/03	A
CCH-PB-303(H)	HYDRO PRES BNDR	CCH-303		VT-2	01022984	10/9/03	A
Exam Category E-A							
Item Number E1.12							
SHELL-471-0-V	SHELL 0-90	CONT-471	01	VT-3	2CNV-06	5/11/05	A
SHELL-471-90-V	SHELL 90-180	CONT-471	02	VT-3	2CNV-07	5/11/05	A
SHELL-471-180-V	SHELL 180-270	CONT-471	03	VT-3	2CNV-08	5/11/05	A
SHELL-471-270-V	SHELL 270-360	CONT-471	04	VT-3	2CNV-09	5/11/05	A
SHELL-441-0-V	SHELL 0-90	CONT-441	01	VT-3	2CNV-010	5/11/05	A
SHELL-441-0-V	SHELL 0-90	CONT-441	01	VT-3	2CNV-016	5/14/05	A
SHELL-441-90-V	SHELL 90-180	CONT-441	02	VT-3	2CNV-010	5/11/05	A
SHELL-441-90-V	SHELL 90-180	CONT-441	02	VT-3	2CNV-017	5/13/05	A
SHELL-441-180-V	SHELL 180-270	CONT-441	03	VT-3	2CNV-010	5/11/05	A
SHELL-441-180-V	SHELL 180-270	CONT-441	03	VT-3	2CNV-013	5/13/05	A
SHELL-441-270-V	SHELL 270-360	CONT-441	04	VT-3	2CNV-010	5/11/05	A
SHELL-441-270-V	SHELL 270-360	CONT-441	04	VT-3	2CNV-014	5/14/05	A
Exam Category E-D							
Item Number E5.10							
X-107B-SEAL	LOW VOLT POWER	CONT-471	03	VT-3	2CNV-05	5/10/05	A
Item Number E5.20							

Notes are on page 16

1. Owner: Energy Northwest, 3000 George Washington Way, PO Box 968, Richland, Washington 99352
2. Plant: Columbia Generating Station, Hanford Reservation, Benton County, Washington
3. Plant Unit: Columbia Generating Station
4. Owner Certificate of Authorization: NA
5. Commercial Service Date: 12/13/84
6. National Board Number: NA

13. Abstract of Examinations and Tests (continued):

Identification No.	Description	Diagram No.	Pg.	Method	Report No.	Date	Rslts(1)
X-1E-GASKET	INSPECTION PORT	CONT-548	03	VT-3	2CNV-011	5/25/05	A
X-1F-GASKET	INSPECTION PORT	CONT-548	03	VT-3	2CNV-011	5/25/05	A
X-1G-GASKET	INSPECTION PORT	CONT-548	04	VT-3	2CNV-011	5/25/05	A
X-1H-GASKET	INSPECTION PORT	CONT-548	04	VT-3	2CNV-011	5/25/05	A
Item Number E5.30							
BTM HEAD MOIST BARRIER	BTM HD MOIST BAR	CONT-422		VT-3	2CNV-015	5/14/05	A
Exam Category E-G							
Item Number E8.10							
TOP HEAD FLG-BLT-V	TOP HEAD FLG BLT	CONT-572		VT-1	2CNV-012	5/26/05	A
EQUIP HATCH BLT-V	EQUIP HATCH	CONT-501	03	VT-1	2CNV-04	8/13/04	A
Exam Category E-P							
Item Number E9.10							
TOP HEAD FLG	DRYWLL HEAD	CONT-572		APP-J	TSP-CONT-R801		A
EQUIP HATCH	EQUIPMENT HATCH	CONT-501		APP-J	TSP-CONT-R801		A
CRD HATCH	CRD HATCH	CONT-501		APP-J	TSP-CONT-R801		A
PERSON HATCH	PERSONNEL HATCH	CONT-501		APP-J	TSP-CONT-R801		A
WET WELL HATCH	WET WELL HATCH	CONT-471		APP-J	TSP-CONT-R801		A
Exam Category E-P							
Item Number E9.40							
X-103A-SEAL	MEDIUM VOLT PWR	CONT-522		APP-J	TSP-CONT-R801		A
X-104C-SEAL	LOW VOLT PWR	CONT-522		APP-J	TSP-CONT-R801		A
Exam Category F-A							
Item Number F1.10A							
RCIC-939N	STRUT	RCIC-102	02	VT-3	2HV-427	5/25/05	A
RFW-164	STRUT	RFW-102	01	VT-3	2HV-413	5/12/05	A
SLC-4475-25	STRUT	SLC-101	07	VT-3	2HV-412	5/12/05	A
SLC-4475-24	STRUT	SLC-101	07	VT-3	2HV-411	5/12/05	A
Item Number F1.10C							
MS-HA-2	SPRING	MS-101	02	VT-3	2HV-419	5/18/05	A
RCIC-942N	SPRING	RCIC-102	02	VT-3	2HV-426	5/25/05	A
RHR-231	SPRING	RHR-101		VT-3	2HV-403	4/20/05	A
RHR-483	SPRING	RHR-102		VT-3	2HV-405	5/3/05	A

Notes are on page 16

1. Owner: Energy Northwest, 3000 George Washington Way, PO Box 968, Richland, Washington 99352
2. Plant: Columbia Generating Station, Hanford Reservation, Benton County, Washington
3. Plant Unit: Columbia Generating Station
4. Owner Certificate of Authorization: NA
5. Commercial Service Date: 12/13/84
6. National Board Number: NA

13. Abstract of Examinations and Tests (continued):

Identification No.	Description	Diagram No.	Pg.	Method	Report No.	Date	Rslts(1)
RHR-504	SPRING	RHR-105		VT-3	2HV-418	5/17/05	A
RHR-506	SPRING	RHR-105		VT-3	2HV-406	5/11/05	R(5)
RHR-506	SPRING	RHR-105		VT-3	2HV-420	5/20/05	A
RHR-510	SPRING	RHR-105		VT-3	2HV-415	5/17/05	A
RHR-514	SPRING	RHR-106		VT-3	2HV-414	5/17/05	A
RRC-12	SPRING	RRC-104		VT-3	2HV-425	5/25/05	A
SLC-4475-22	SPRING	SLC-101	07	VT-3	2HV-410	5/12/05	A
Item Number F1.10D							
RHR-907N	PSA-35 SNUBBER	RHR-102		VT-3	2HV-404	5/3/05	A
RHR-388	PSA-10 SNUBBER	RHR-102		VT-3	2HV-421	5/20/05	A
RHR-389	PSA-35 SNUBBER	RHR-102		VT-3	2HV-422	5/20/05	A
RHR-SA-38	PSA-10 SNUBBER	RHR-105		VT-3	2HV-417	5/18/05	A
RHR-SA-32	PSA-10 SNUBBER	RHR-105		VT-3	2HV-416	5/17/05	A
RRC-1C-1	PSA-1 SNUBBER	RRC-104		VT-3	2HV-424	5/24/05	A
RRC-1C-900N	PSA-1 SNUBBER	RRC-104		VT-3	2HV-423	5/24/05	A
RHR-SA-51	PSA-35 SNUBBER	RRC-105		VT-3	2HV-444	5/28/05	A
RRC-4470-31	PSA-1 SNUBBER	RRC-111		VT-3	2HV-409	5/12/05	A
RRC-4470-31	PSA-1 SNUBBER	RRC-111		VT-3	2HV-428	5/23/05	A
Item Number F1.20D							
MS-993N	PSA-10 SNUBBER	MS-201	02	VT-3	2HV-431	5/17/05	A
MS-114	PSA-10 SNUBBER	MS-201	02	VT-3	2HV-434	5/17/05	A
MS-114	PSA-10 SNUBBER	MS-201	02	VT-3	2HV-435	5/17/05	A
MS-96	PSA-10 SNUBBER	MS-201	03	VT-3	2HV-429	5/18/05	A
MS-96	PSA-10 SNUBBER	MS-201	03	VT-3	2HV-430	5/18/05	A
MS-996N	PSA-10 SNUBBER	MS-202	02	VT-3	2HV-436	5/17/05	A
MS-177	PSA-3 SNUBBER	MS-202	03	VT-3	2HV-432	5/18/05	A
MS-151	PSA-3 SNUBBER	MS-202	03	VT-3	2HV-443	5/18/05	A
MS-145	PSA-10 SNUBBER	MS-202	04	VT-3	2HV-438	5/17/05	A
MS-38	PSA-10 SNUBBER	MS-203	02	VT-3	2HV-439	5/17/05	A
Item Number F1.30A							
MSH-54	RIGID	MS-213	01	VT-3	2HV-407	5/10/05	A
MSH-38	RIGID	MS-214	01	VT-3	2HV-408	5/10/05	A
SW RING HDR A(CS)	RING HDR SUPPT	SW-307	05	VT-3	2SWV-033	5/13/05	A
Item Number F1.30D							
MSRV-1A-3	PSA-10 SNUBBER	MS-301	01	VT-3	2HV-440	5/19/05	A
MSRV-3D-4	PSA-10 SNUBBER	MS-317	01	VT-3	2HV-437	5/19/05	A

Notes are on page 16

1. **Owner:** Energy Northwest, 3000 George Washington Way, PO Box 968, Richland, Washington 99352
2. **Plant:** Columbia Generating Station, Hanford Reservation, Benton County, Washington
3. **Plant Unit:** Columbia Generating Station
4. **Owner Certificate of Authorization:** NA
5. **Commercial Service Date:** 12/13/84
6. **National Board Number:** NA

13. Abstract of Examinations and Tests (continued):

Identification No.	Description	Diagram No. Pg.	Method Report No.	Date	Rslts(1)

Notes to section 13 "Abstract of Examinations and Tests"
(1) A = Acceptable R = Rejectable
(2) Indications found that exceeded IWB-3510-1.Engineering evaluation was acceptable.
(3) Bonnet to body leak of 5 dpm during pressure test. Acceptable will seal at operating temperature.
(4) Bonnet to body leak of 60 dpm during pressure test. Acceptable will seal at operating temperature.
(5) Spring setting greater than 5% from design. Spring was reset. Additional examinations were performed with no additional problems found

- END OF REPORT-

Notes are on page 16

APPENDIX B

NIS-2 OWNER'S REPORTS

This appendix summarizes ASME Section XI repair or replacement work performed between June 28, 2003 and June 17, 2005. The status of the NIS-2 Owner's Report is stated for each repair and replacement work performed.

APPENDIX B

ASME SECTION XI REPAIR AND REPLACEMENT LISTING FOR COLUMBIA GENERATING STATION REFUELING OUTAGE R17

PLAN NO	WOT NO	COMPONENT NUMBER AND WORK DESCRIPTION	CODE COMPONENT
2-1791 *	01038269 01	Installed valves for RHR-PS-16A and RHR-PS-19A	Tubing
2-1792 *	01038270 01	Installed valves for RHR-PS-16B and RHR-PS-19B	Tubing
2-1808	01057923 01	Replaced relief valve RCIC-RV-19T	Piping
2-1828	01060318 01	Replaced disc for spare relief valve S/N 139407-1-2 (SLC-RV-29B)	Relief Valve
2-1837	01055286 01	Replaced level switches HPCS-LS-3A and HPCS-LS-3B	Piping
2-1842 *	01085274 01	Replaced poppet for valve RHR-V-60B	Valve
2-1843	01046272 01	Machined seal holder Serial No N01-1 for RRC pumps	Pump
2-1874 *	01090172 01	Replaced piping material associated with valve SW-V-146D	Piping
2-1879	01065863 06	Fabricated orifice plate for SW-FE-2A - See Plan No 2-1880	Piping
2-1880	01065863 01	Installed orifice plate for SW-FE-2A - See Plan No 2-1879	Piping
2-1881	01065732 02	Fabricated orifice plate for SW-FE-2B - See Plan No 2-1882	Piping
2-1882	01065732 01	Installed orifice plate for SW-FE-2B - See Plan No 2-1881	Piping
2-1883 *	01050531 08	Replaced poppet for valve RHR-V-75A	Valve
2-1889	01074756 01	Replaced rupture disc for CCH-RD-1A - New design	Piping
2-1890	01065419 16	Replaced Local Power Range Monitoring (LPRM) for core location 16-17	RPV
2-1891	01070528 01	Made body to bonnet seal weld for valve FDR-V-541	Valve
2-1892 *	01076768 01	Replaced studs and nuts for valve RRC-V-20 bolted flanged joints	Piping
2-1893	01077642 01	Replaced nozzle and disc for relief valve FPC-RV-21A, S/N 509258-97-1	Relief Valve
2-1894 *	01053917 01	Replaced U bolt shown on Dwg D-220-031.0-IR-69	Tubing
2-1895	01076338 01	Replaced relief valve SLC-RV-29A	Piping
2-1896	01076592 01	Replaced relief valve SLC-RV-29B	Piping
2-1897	010799010 01	Replaced rupture disc for CCH-RD-1B - New design	Piping
2-1899	01060822 02	Refurbished valve MS-V-22D - Reused existing parts	Valve
2-1900	01077279 17	Weld repaired bore ID for valve MS-V-28D	Valve
2-1901	01098226 01	Replaced bolt for relief valve MS-RV-3C discharge bolted joint	Piping
2-1903	01083089 08	Replaced studs and nuts for piping flange joints associated with EDR-HX-1	Piping
2-1905	01060822 17	Refurbished bore ID for valve MS-V-22D - No weld repairs required	Valve
2-1906	01084406 14	Replaced valve MS-V-67D	Piping
2-1907	01077279 16	Assembled pilot disc (stem disc) and main disc (piston disc) for MS-V-28D	Valve
2-1908	01077279 02	Replaced parts for valve MS-V-28D	Valve
2-1909 *	01073168 01	Replaced valve IR-V-IR82/V1 (IR-82-V-3B) - Isolation valve No 6	Valve
2-1910	01066902 05	Replaced nut material for Equipment Hatch X-15 (C-X-15)	Containment
2-1911	01076766 01	Replaced studs and nuts for relief valve RHR-RV-1A inlet/outlet joints	Piping
2-1912	01067958 01	Replaced studs and nuts for relief valve RHR-RV-88C outlet joint	Piping
2-1913	01069714 01	Replaced relief valve SW-RV-1A	Piping
2-1914	01069665 01	Replaced relief valve SW-RV-1B	Piping
2-1915 *	01077229 01	Replaced studs and nuts for valve RRC-V-19 bolted flanged joints	Piping
2-1916	01099516 01	Replaced existing rigid struts with snubbers for supports MS-53 and MS-1010N	Piping
2-1917	01099516 11	Replaced existing rigid struts with snubbers for support MS-56	Piping
2-1918	01089434 01	Prefabricated - Replaced valves LPCS-V-33 and LPCS-V-34	Piping
2-1918	01059796 01	Installed - Replaced valves LPCS-V-33 and LPCS-V-34	Piping
2-1919	01089173 01	Prefabricated - Replaced valves HPCS-V-6 and HPCS-V-7	Piping
2-1919	01062942 01	Installed - Replaced valves HPCS-V-6 and HPCS-V-7	Piping
2-1920	01060407 01	Replaced bolting material for bulk head bolted joints on Dwg RCIC-659-26	Piping
2-1921	01069240 01	Replaced parts for valve SLC-V-4B	Valve
2-1922 *	01071935 01	Replaced valve PI-V-X264 (PI-VX-264)	Piping
2-1923	01008438 01	Prefabricated - Replaced valve RHR-V-53B	Piping
2-1923	01086647 05	Installed - Replaced valve RHR-V-53B	Piping
2-1924	01091970 07	Fabricated orifice plate for SW-FE-35A - See Plan No 2-1925	Piping
2-1925	01091970 01	Installed orifice plate for SW-FE-35A - See Plan No 2-1924	Piping
2-1926	01039818 01	Replaced existing relief valve MS-RV-2D with spare S/N N63790-03-0054	Piping
2-1927	01039819 01	Replaced existing relief valve MS-RV-4C with spare S/N N63790-03-0056	Piping
2-1928	01094439 01	Prefabricated - Replaced CS piping downstream of SW-FE-1A with SS piping	Piping
2-1928	01075924 01	Installed - Replaced CS piping downstream of SW-FE-1A with SS piping	Piping
2-1929	01094438 01	Prefabricated - Replaced CS piping downstream of SW-FE-1B with SS piping	Piping
2-1929	01075927 01	Installed - Replaced CS piping downstream of SW-FE-1B with SS piping	Piping
2-1931	01089436 01	Prefabricated - Replaced valves RHR-V-84C and RHR-V-85C	Piping
2-1931	01062946 01	Installed - Replaced valves RHR-V-84C and RHR-V-85C	Piping

APPENDIX B

ASME SECTION XI REPAIR AND REPLACEMENT LISTING
FOR COLUMBIA GENERATING STATION REFUELING OUTAGE R17

PLAN NO	WOT NO	COMPONENT NUMBER AND WORK DESCRIPTION	CODE COMPONENT
2-1946	PO 313236	Refurbished MSRV S/N N63790-03-0054 - NWS Tech, Spartanburg, SC	Relief Valve
2-1947	PO 313236	Refurbished MSRV S/N N63790-03-0056 - NWS Tech, Spartanburg, SC	Relief Valve
2-1948	PO 313236	Refurbished MSRV S/N N63790-03-0126 - NWS Tech, Spartanburg, SC	Relief Valve
2-1949	01077285 01	Replaced relief valve RHR-RV-5 (Crosby)	Piping
2-1950	01077282 01	Replaced relief valve RHR-RV-25A (Crosby)	Piping
2-1951	01077286 01	Replaced relief valve RHR-RV-88A (Crosby)	Piping
2-1952	01077287 01	Replaced relief valve LPCS-RV-18 (Crosby)	Piping
2-1953	01077284 01	Replaced relief valve HPCS-RV-35 (Crosby)	Piping
2-1954	01095163 01	Replaced relief valve RCC-RV-34B	Piping
2-1955	01075429 07	Replaced "Supernuts" for relief valve MS-RV-3D, S/N N63790-03-0057 inlet joint	Piping
2-1956	01095655 01	Prefabricated - Replaced valve EDR-V-18	Piping
2-1956	01075412 01	Installed - Replaced valve EDR-V-18	Piping
2-1957	01090194 01	Prefabricated - Replaced valves FDR-V-3, FDR-V-4 and FDR-V-15	Piping
2-1957	01075408 01	Installed - Replaced valves FDR-V-3, FDR-V-4 and FDR-V-15	Piping
2-1958 *	01075408 06	Replaced tubing for valve FDR-V-3	Tubing
2-1959 *	01075408 07	Replaced tubing for valve FDR-V-4	Tubing
2-1960	01075434 02	Assembled pilot disc (stem disc) and main disc (piston disc) for MS-V-22B	Valve
2-1962	01075434 04	Replaced parts for valve MS-V-22B	Valve
2-1963	01075433 02	Assembled pilot disc (stem disc) and main disc (piston disc) for MS-V-22C	Valve
2-1965	01075433 04	Replaced parts for valve MS-V-22C	Valve
2-1966	01077291 16	Assembled pilot disc (stem disc) and main disc (piston disc) for MS-V-28A	Valve
2-1968	01077291 02	Replaced parts for valve MS-V-28A	Valve
2-1969	01089364 06	Machined existing hinge pins for valve FPC-V-112B	Valve
2-1971	01075419 01	Replaced disc for valve SW-V-822B	Valve
2-1972	01078781 01	Replaced relief valve RHR-RV-25B (Crosby)	Piping
2-1973	01078782 01	Replaced relief valve RHR-RV-25C (Crosby)	Piping
2-1977	01074383 01	Cut and rewelded welds associated with SW-FE-41	Piping
2-1982	01075934 01	Weld built up down stream of valve SW-V-2A - See Plan No 2-1996	Piping
2-1983	01075935 01	Weld built up down stream of valve SW-V-2B - See Plan No 2-1997	Piping
2-1985	01063312 06	Replaced Local Power Range Monitoring (LPRM) for core location 32-09	RPV
2-1986	01097743 01	Replaced pipe for connection with valves HPCS-V-713 and HPCS-V-714	Piping
2-1987	01065291 01	Replaced body to bonnet studs and nuts for valve RCC-V-72B	Valve
2-1989	01067751 01	Replaced snubber with rigid strut for support RRC-4470-31	Support
2-1990	01096320 01	Installed blind flange for RHR-COND flush connection at valve RHR-V-7	Piping
2-1991	01098239 01	Replaced nuts and bolts for drywell head C-DH-1	Containment
2-1996	01075934 010	Performed SS weld overlay down stream of valve SW-V-2A - See Pan No 2-1982	Piping
2-1997	01075935 06	Performed SS weld overlay down stream of valve SW-V-2B - See Pan No 2-1983	Piping
2-1998	Various	RPV nozzle safe end weld contour for ultrasonic (UT) examination	RPV
2-2001 *	01098638 07	Prefabricated - Modified connection with RCIC-V-114 & RCIC-V-115 (Dragon Valves)	Piping
2-2001 *	01098638 01	Installed - Modified connection with RCIC-V-114 & RCIC-V-115 (Dragon Valves)	Piping
2-2002 *	01066744 05	Replaced valve RRC-V-19	Piping
2-2003	01070007 01	Replaced tube bundle for heat exchanger OG-HX-1B	Heat Exchanger
2-2004	01076650 01	Replaced studs and nuts for bolted flanged joint for flex hose CIA-FLX-2N	Piping
2-2007	01099516 11	Removed rigid struts from support MS-1009N	Piping
2-2009	01087721 30	Cut and rewelded weld associated with valves CEP-V-800-3/800-4	Piping
2-2010 *	01094186 01	Replaced wedge for valve CRD-V-101/3811(I)	Valve
2-2011	01099184 01	Replaced rear snubber for valve CVB-V-1NP	Valve
2-2012	01099340 01	Fabricated orifice plate for HPCS-RO-6	Piping
2-2012	01099340 03	Installed orifice plate for HPCS-RO-6	Piping
2-2014	01067000 01	Replaced pump SW-P-1A	Piping
Not Applicable	01067751 01	Replaced snubber for support MS-96(B)	Support/Piping
Not Applicable	01067751 01	Replaced snubber for support MS-993N(T)	Support/Piping
Not Applicable	01067751 01	Replaced snubber for support MS-177(N)	Support/Piping
Not Applicable	01067751 01	Replaced snubber for support RRC-1549-62	Support/Piping
Not Applicable	01067751 01	Replaced snubber for support MS-114(N)	Support/Piping
Not Applicable	01067751 01	Replaced snubber for support MS-996N(T)	Support/Piping
Not Applicable	01067751 01	Replaced snubber for support MS-114(S)	Support/Piping
Not Applicable	01067751 01	Replaced snubber for support MSRV-3D-4	Support/Piping
Not Applicable	01067751 01	Replaced snubber for support MS-145	Support/Piping
Not Applicable	01067751 01	Replaced snubber for support MS-38(T)	Support/Piping

APPENDIX B

ASME SECTION XI REPAIR AND REPLACEMENT LISTING
FOR COLUMBIA GENERATING STATION REFUELING OUTAGE R17

PLAN NO	WOT NO	COMPONENT NUMBER AND WORK DESCRIPTION	CODE COMPONENT
Not Applicable	01067751 01	Replaced snubber for support MSRV-1A-3	Support/Piping
Not Applicable	01067751 01	Replaced snubber for support MD-1285-14C	Support/Piping
Not Applicable	01067751 01	Replaced snubber for support MD-1285-14A	Support/Piping
Not Applicable	01067751 01	Replaced snubber for support MS-96(T)	Support/Piping
Not Applicable	01067751 01	Replaced snubber for support MS-151(B)	Support/Piping
Not Applicable	01067751 01	Replaced snubber for support RHR-SA-51	Support/Piping
Not Applicable	01062290 05	Overhauled Control Rod Drive (CRD) Serial No A8591	CRD
Not Applicable	01062290 06	Overhauled Control Rod Drive (CRD) Serial No 6717	CRD
Not Applicable	01062290 07	Overhauled Control Rod Drive (CRD) Serial No A9376	CRD
Not Applicable	01062290 08	Overhauled Control Rod Drive (CRD) Serial No A9413	CRD
Not Applicable	01062290 09	Overhauled Control Rod Drive (CRD) Serial No A8743	CRD
Not Applicable	01062290 10	Overhauled Control Rod Drive (CRD) Serial No A9118	CRD
Not Applicable	01062290 11	Overhauled Control Rod Drive (CRD) Serial No A8478	CRD
Not Applicable	01062290 12	Overhauled Control Rod Drive (CRD) Serial No A8668	CRD
Not Applicable	01062290 13	Overhauled Control Rod Drive (CRD) Serial No A8721	CRD
Not Applicable	01062290 14	Overhauled Control Rod Drive (CRD) Serial No A9330	CRD
Not Applicable	01062290 15	Overhauled Control Rod Drive (CRD) Serial No 6389	CRD
Not Applicable	01062290 16	Overhauled Control Rod Drive (CRD) Serial No A8713	CRD
Not Applicable	01062290 17	Overhauled Control Rod Drive (CRD) Serial No A8470	CRD
Not Applicable	01062290 18	Overhauled Control Rod Drive (CRD) Serial No A9414	CRD
Not Applicable	01062290 19	Overhauled Control Rod Drive (CRD) Serial No A9646	CRD
Not Applicable	01062290 43	Overhauled Control Rod Drive (CRD) Serial No A9452	CRD
Not Applicable	01062290 44	Overhauled Control Rod Drive (CRD) Serial No A9448	CRD
Not Applicable	01062290 45	Overhauled Control Rod Drive (CRD) Serial No A9547	CRD
Not Applicable	01062290 46	Overhauled Control Rod Drive (CRD) Serial No A9419	CRD
Not Applicable	01062290 47	Overhauled Control Rod Drive (CRD) Serial No 6792	CRD
Not Applicable	01062290 48	Overhauled Control Rod Drive (CRD) Serial No 7048	CRD
Not Applicable	01062290 49	Overhauled Control Rod Drive (CRD) Serial No A9402	CRD
Not Applicable	01062290 50	Overhauled Control Rod Drive (CRD) Serial No A9401	CRD
Not Applicable	01062290 51	Overhauled Control Rod Drive (CRD) Serial No A9451	CRD
Not Applicable	01062290 52	Overhauled Control Rod Drive (CRD) Serial No A9421	CRD
Not Applicable	01062290 53	Overhauled Control Rod Drive (CRD) Serial No A9544	CRD
Not Applicable	01062290 54	Overhauled Control Rod Drive (CRD) Serial No A9481	CRD
Not Applicable	01090165 05	Replaced Control Rod Drive (CRD) at Core Location 26-51	CRD***
Not Applicable	01090165 06	Replaced Control Rod Drive (CRD) at Core Location 10-51	CRD***
Not Applicable	01090165 07	Replaced Control Rod Drive (CRD) at Core Location 06-43	CRD***
Not Applicable	01090165 08	Replaced Control Rod Drive (CRD) at Core Location 58-39	CRD***
Not Applicable	01090165 09	Replaced Control Rod Drive (CRD) at Core Location 34-31	CRD***
Not Applicable	01090165 10	Replaced Control Rod Drive (CRD) at Core Location 02-31	CRD***
Not Applicable	01090165 11	Replaced Control Rod Drive (CRD) at Core Location 02-39	CRD***
Not Applicable	01090165 12	Replaced Control Rod Drive (CRD) at Core Location 14-11	CRD***
Not Applicable	01090165 13	Replaced Control Rod Drive (CRD) at Core Location 18-15	CRD***
Not Applicable	01090165 14	Replaced Control Rod Drive (CRD) at Core Location 26-39	CRD***
Not Applicable	01090165 15	Replaced Control Rod Drive (CRD) at Core Location 26-47	CRD***
Not Applicable	01090165 16	Replaced Control Rod Drive (CRD) at Core Location 30-07	CRD***
Not Applicable	01090165 17	Replaced Control Rod Drive (CRD) at Core Location 30-35	CRD***
Not Applicable	01090165 18	Replaced Control Rod Drive (CRD) at Core Location 30-47	CRD***
Not Applicable	01090165 19	Replaced Control Rod Drive (CRD) at Core Location 30-51	CRD***
Not Applicable	01090165 35	Replaced Control Rod Drive (CRD) at Core Location 34-23	CRD***
Not Applicable	01090165 36	Replaced Control Rod Drive (CRD) at Core Location 34-47	CRD***
Not Applicable	01090165 37	Replaced Control Rod Drive (CRD) at Core Location 34-55	CRD***
Not Applicable	01090165 38	Replaced Control Rod Drive (CRD) at Core Location 38-43	CRD***
Not Applicable	01090165 39	Replaced Control Rod Drive (CRD) at Core Location 42-27. First replacement	CRD***
Not Applicable	01090165 40	Replaced Control Rod Drive (CRD) at Core Location 42-55	CRD***
Not Applicable	01090165 41	Replaced Control Rod Drive (CRD) at Core Location 42-59	CRD***
Not Applicable	01090165 42	Replaced Control Rod Drive (CRD) at Core Location 46-19	CRD***
Not Applicable	01090165 43	Replaced Control Rod Drive (CRD) at Core Location 46-35	CRD***
Not Applicable	01090165 44	Replaced Control Rod Drive (CRD) at Core Location 46-51	CRD***
Not Applicable	01090165 45	Replaced Control Rod Drive (CRD) at Core Location 46-55	CRD***
Not Applicable	01090165 46	Replaced Control Rod Drive (CRD) at Core Location 50-43	CRD***

APPENDIX B

ASME SECTION XI REPAIR AND REPLACEMENT LISTING FOR COLUMBIA GENERATING STATION REFUELING OUTAGE R17

PLAN NO	WOT NO	COMPONENT NUMBER AND WORK DESCRIPTION	CODE COMPONENT
Not Applicable	01090165 47	Control Rod Drive (CRD) at Core Location 58-23**	CRD***
Not Applicable	01090165 48	Replaced Control Rod Drive (CRD) at Core Location 54-35	CRD***
Not Applicable	01098605 04	Replaced Control Rod Drive (CRD) at Core Location 42-27. Second replacement	CRD

NOTES -

Note 1 * Authorized Nuclear Inservice Inspector's (ANII's) involvement was not required for these ASME Section XI replacement work plans for one (1) inch nominal pipe size (NPS) and smaller.

Note 2 ** Due to interference with valve RCC-V-89, the CRD at Core Location 58-23 was not replaced. However, O rings, washers and cap screws were replaced

Note 3 *** Performed VT-1 visual examination on the new cap screws. Replaced all eight (8) cap screws for each core location

PLAN No 2-1791

ENERGY NORTHWEST
People·Vision·Solutions

FORM NIS-2 OWNER'S REPORT FOR REPAIRS OR REPLACEMENTS
As Required By The Provisions Of The ASME Code Section XI

Date: 12/11/03
Sheet: 1 Of 1
Unit: Not Applicable

1. **Owner:** Energy Northwest
   Address: Columbia Generating Station, North Power Plant Loop, Richland, Washington, 99352
2. **Plant:** Columbia Generating Station
   Address: Columbia Generating Station, North Power Plant Loop, Richland, Washington, 99352
3. **(a) Work Performed By:** Energy Northwest
   (b) Repair Organization P.O. No, Job No, etc.: Energy Northwest
   (c) Type Code Symbol Stamp: Not Applicable
   (d) Certificate Of Authorization No.: Not Applicable
   (e) Expiration Date: Not Applicable
4. **Identification Of System:** Residual Heat Removal (RHR) System
5. **(a) Applicable Construction Code:** ASME Section III, Code Class 2, 1971 Edition with Winter 1973 Addenda, Code Case: None
   (b) Applicable Edition Of ASME Section XI Utilized For Repairs Or Replacements: 1989 Edition with no Addenda, Code Case: None
6. **Identification Of Components Repaired Or Replaced And Replacement Components**

Name Of Component	Name Of Manufacturer	Manufacturer's Serial No	National Board No	Other I.D.	Year Built	Repaired, Replaced Or Replacement	ASME Code Stamped (Yes Or No) Code Class
RHR(1)-2A	WPPSS *	RHR(1)-2A-P1	N/A	N/A	1983	----------	Yes, Code Class 2
Valve For RHR-PS-16A	Dragon	PB 1409	N/A	N/A	2003	Replacement	Yes, Code Class 2
Valve For RHR-PS-19A	Dragon	PB 1410	N/A	N/A	2003	Replacement	Yes, Code Class 2

7. **Description Of Work Performed:** Installed new valves for RHR-PS-16A and RHR-PS-19A. The work was performed as follows:

RHR-PS-16A

1) Installed new valve Serial No PB 1409 for RHR-PS-16A.
2) Made required socket welds.
3) Performed visual examination on the final socket welds. Visual examination results acceptable.
4) Performed liquid penetrant (PT) examination on the final socket welds. Liquid penetrant (PT) examination results acceptable.

RHR-PS-19A

1) Installed new valve Serial No PB 1410 for RHR-PS-19A.
2) Made required socket welds.
3) Performed visual examination on the final socket welds. Visual examination results acceptable.
4) Performed liquid penetrant (PT) examination on the final socket welds. Liquid penetrant (PT) examination results acceptable.

NOTES -

1) * Company name changed from Washington Public Power Supply System (WPPSS) to Energy Northwest in 1999.
2) The existing ASME Code Stamped piping system in which new valve Serial No PB 1409 and valve Serial No PB 1410 were installed is Residual Heat Removal (RHR) piping system RHR(1)-2A-P1. This piping system is certified to comply with ASME Section III, Code Class 2, 1971 Edition with Winter 1973 Addenda requirements.
3) The new valve Serial No PB 1409 and valve Serial No PB 1410 are certified to comply with ASME Section III, Code Class 2, 1974 Edition with Summer 1975 Addenda requirements.

PLAN No 2-1791

ENERGY NORTHWEST
People·Vision·Solutions

FORM NIS-2 OWNER'S REPORT FOR REPAIRS OR REPLACEMENTS (Back)

8 Tests Conducted: Hydrostatic [ ] *Pneumatic* [ ] *Nominal Operating Pressure* [ ] *None* [X]
Test Pressure: Psig *Test Temperature:* °F
Component Design Pressure: Psig *Temperature:* °F

9. Remarks: See attached NPV-1 Code Data Reports for the following valves:
1) Valve Serial No PB 1409 for RHR-PS-16A.
2) Valve Serial No PB 1410 for RHR-PS-19A.

CERTIFICATE OF COMPLIANCE

We certify that the statements made in this Owner's Report are correct and this replacement *conforms to the rules of the ASME Code, Section XI.*
Type Code Symbol Stamp: Not Applicable
Certificate Of Authorization No.: Not Applicable
Expiration Date: Not Applicable

Prepared By Kuldip Singh *Signed By* Kuldip Singh
Kuldip Singh - Program Lead Engineer (PLE) Kuldip Singh - Program Lead Engineer (PLE)
Date 12/11/03 *Date* 12/11/03

CERTIFICATE OF INSERVICE INSPECTION

I, the undersigned, holding a valid commission issued by the National Board of Boiler and Pressure Vessel Inspectors and the State of _____ *and employed by* _____ _____ *have inspected the components described in this Owner's Report during the period* _____ *to* _____ *and state to the best of my knowledge and belief, the Owner has performed examinations and taken corrective measures described in this Owner's Report in accordance with the requirements of the ASME Code, Section XI.*
By signing this certificate neither the Inspector nor his employer makes any warranty, expressed or implied, concerning the examinations and corrective measures described in this Owner's Report. Furthermore, neither the Inspector nor his employer shall be liable in any manner for any personal injury or property damage or a loss of any kind arising from or connected with this inspection.

Not Required - Replacement 1" NPS And Smaller *Commissions* _____
Inspector's Signature National Board, State, and Endorsements
Date _____

FORM NPV-1 N CERTIFICATE HOLDERS' DATA REPORT FOR NUCLEAR PUMPS OR VALVES*

As Required by the Provisions of the ASME Code, Section III, Div. 1 PLAN No. 2-1791

1. Manufactured by Dragon Valves, Inc., 13457 Excelsior Dr., Norwalk, CA. 90650
(Name and Address of N Certificate Holder)
2. Manufactured for Energy Northwest, P.O. Box 968, Richland, WA. 99352-0968
(Name and Address of Purchaser or Owner)
3. Location of Installation Energy Northwest, Columbia Generating Station, Richland, WA. 99352
(Name and Address)
4. Pump or Valve Valve. Nominal Inlet Size 1/2 (inch) Outlet Size 1/2 (inch)

	(a) Model No., Series No. or Type	(b) N Certificate Holder's Serial No.	(c) Canadian Registration No.	(d) Drawing No.	(e) Class	(f) Nat'l. Bd. No.	(g) Year Built
(1)	7N058SWD	PB1398	N/A	10580	2	N/A	2003
(2)		Thru		Rev. C			
(3)		PB1410					
(4)							
(5)	VALVE FOR RHR-PS-16A, S/N PB1409						
(6)							
(7)							
(8)				Quality Supply			
(9)							
(10)				2/10/03			

5. Instrument Valve (13 Pcs.)
(Brief description of service for which equipment was designed)

6. Design Conditions _____ (Pressure) psi _____ (Temperature) °F or Valve Pressure Class 1500 (1)
7. Cold Working Pressure 3600 psi at 100°F.
8. Pressure Retaining Pieces

Mark No.	Material Spec. No.	Manufacturer	Remarks
(a) Castings N/A			
(b) Forgings			
HT. 4234H	ASME SA182 Gr. F316	Ajax Forge Co.	Body
HT. A19167	ASME SA182 GR. F316	Ajax Forge Co.	Bonnet Yoke

(1) For manually operated valves only.

* Supplemental sheets in form of lists, sketches or drawings may be used provided (1) size is 8-1/2" x 11", (2) information in items 1, 2 and 5 on this Data Report is included on each sheet, and (3) each sheet is numbered and number of sheets is recorded at top of this form.

FORM NPV-1 (Back)

Mark No.	Material Spec. No.	Manufacturer	Remarks
(c) Bolting N/A			
(d) Other Parts			
HT. 712678	ASME SA564 GR. 630	Carpenter Tech. Corp.	Disc

9. Hydrostatic test 5400 psi. Disk Differential test pressure 3600 psi.

CERTIFICATE OF COMPLIANCE

We certify that the statements made in this report are correct and that this pump, or valve, conforms to the rules of construction of the ASME Code for Nuclear Power Plant Components. Section III, Div. I., Edition 1974, Addenda S'75 (Date), Code Case No. N/A. Date February 25, 2003

Signed Dragon Valves, Inc. (N Certificate Holder) by Mark A. Snyder

Our ASME Certificate of Authorization No. N-1033 to use the N (N) symbol expires 5/6/05 (Date).

CERTIFICATION OF DESIGN

Design information on file at Energy Northwest

Stress analysis report (Class 1 only) on file at N/A

Design specifications certified by (1) Abbas A. Mostala

PE State WA. Reg. No. 28777

Stress analysis certified by (1) N/A

PE State _____ Reg. No. _____

(1) Signature not required. List name only.

CERTIFICATE OF SHOP INSPECTION

I, the undersigned, holding a valid commission issued by the National Board of Boiler and Pressure Vessel Inspectors and the State or Province of CALIFORNIA and employed by HSB CT of HARTFORD, CT. have inspected the pump, or valve, described in this Data Report on 2-25 19 03, and state that to the best of my knowledge and belief, the N Certificate Holder has constructed this pump, or valve, in accordance with the ASME Code, Section III.

By signing this certificate, neither the Inspector nor his employer makes any warranty, expressed or implied, concerning the equipment described in this Data Report. Furthermore, neither the Inspector nor his employer shall be liable in any manner for any personal injury or property damage or a loss of any kind arising from or connected with this inspection.

Date 2-25 19 03.

(Inspector) Commissions NB 12050-N / CA-1969 (Nat'l Bd., State, Prov. and No.)

FORM NPV-1 N CERTIFICATE HOLDERS' DATA REPORT FOR NUCLEAR PUMPS OR VALVES*

As Required by the Provisions of the ASME Code, Section III, Div. 1 PLAN No. 2-1791

1. Manufactured by Dragon Valves, Inc., 13457 Excelsior Dr., Norwalk, CA. 90650
(Name and Address of N Certificate Holder)
2. Manufactured for Energy Northwest, P.O. Box 968, Richland, WA. 99352-0968
(Name and Address of Purchaser or Owner)
3. Location of Installation Energy Northwest, Columbia Generating Station, Richland, WA. 99352
(Name and Address)
4. Pump or Valve Valve. Nominal Inlet Size 1/2 (inch) Outlet Size 1/2 (inch)

	(a) Model No., Series No. or Type	(b) N Certificate Holder's Serial No.	(c) Canadian Registration No.	(d) Drawing No.	(e) Class	(f) Nat'l. Bd. No.	(g) Year Built
(1)	7N058SWD	PB1398	N/A	10580	2	N/A	2003
(2)		Thru		Rev. C			
(3)		PB1410					
(4)							
(5)							
(6)	VALVE FOR RHR-PS-19A, S/N PB1410						
(7)							
(8)							
(9)				Philip Sugg			
(10)				12/10/03			

5. Instrument Valve (13 Pcs.)
(Brief description of service for which equipment was designed)

6. Design Conditions _____ (Pressure) psi _____ (Temperature) °F or Valve Pressure Class 1500 (1)
7. Cold Working Pressure 3600 psi at 100°F.
8. Pressure Retaining Pieces

Mark No.	Material Spec. No.	Manufacturer	Remarks
(a) Castings N/A			
(b) Forgings			
HT. 4234H	ASME SA182 Gr. F316	Ajax Forge Co.	Body
HT. A19167	ASME SA182 GR. F316	Ajax Forge Co.	Bonnet Yoke

(1) For manually operated valves only.

* Supplemental sheets in form of lists, sketches or drawings may be used provided (1) size is 8-1/2" x 11", (2) information in items 1, 2 and 5 on this Data Report is included on each sheet, and (3) each sheet is numbered and number of sheets is recorded at top of this form.

(10/77) This form (E00037) may be obtained from the Order Dept., ASME, 345 E. 47th St., New York, N.Y. 10017

FORM NPV-1 (Back)

Mark No.	Material Spec. No.	Manufacturer	Remarks
(c) Bolting N/A			
(d) Other Parts			
HT. 712678	ASME SA564 GR. 630	Carpenter Tech. Corp.	Disc

9. Hydrostatic test 5400 psi. Disk Differential test pressure 3600 psi.

CERTIFICATE OF COMPLIANCE

We certify that the statements made in this report are correct and that this pump, or valve, conforms to the rules of construction of the ASME Code for Nuclear Power Plant Components. Section III, Div. I., Edition 1974, Addenda S'75 (Date), Code Case No. N/A. Date February 25, 2003

Signed Dragon Valves, Inc. (N Certificate Holder) by Mark A. Snyder

Our ASME Certificate of Authorization No. N-1033 to use the N (N) symbol expires 5/6/05 (Date).

CERTIFICATION OF DESIGN

Design information on file at Energy Northwest

Stress analysis report (Class 1 only) on file at N/A

Design specifications certified by (1) Abbas A. Mostala

PE State WA. Reg. No. 28777

Stress analysis certified by (1) N/A

PE State _____ Reg. No. _____

(1) Signature not required. List name only.

CERTIFICATE OF SHOP INSPECTION

I, the undersigned, holding a valid commission issued by the National Board of Boiler and Pressure Vessel Inspectors and the State or Province of CALIFORNIA and employed by HSB CT of HARTFORD, CT. have inspected the pump, or valve, described in this Data Report on 2-25 19 03, and state that to the best of my knowledge and belief, the N Certificate Holder has constructed this pump, or valve, in accordance with the ASME Code, Section III.

By signing this certificate, neither the Inspector nor his employer makes any warranty, expressed or implied, concerning the equipment described in this Data Report. Furthermore, neither the Inspector nor his employer shall be liable in any manner for any personal injury or property damage or a loss of any kind arising from or connected with this inspection.

Date 2-25 19 03.

E.O. [illegible] (Inspector) Commissions NB 12050-N / CA-1969 (Nat'l Bd., State, Prov. and No.)

PLAN No 2-1792

ENERGY NORTHWEST
People·Vision·Solutions

FORM NIS-2 OWNER'S REPORT FOR REPAIRS OR REPLACEMENTS
As Required By The Provisions Of The ASME Code Section XI

Date: 12/11/03
Sheet: 1 Of 1
Unit: Not Applicable

1. **Owner:** Energy Northwest
   Address: Columbia Generating Station, North Power Plant Loop, Richland, Washington, 99352
2. **Plant:** Columbia Generating Station
   Address: Columbia Generating Station, North Power Plant Loop, Richland, Washington, 99352
3. **(a) Work Performed By:** Energy Northwest
   (b) Repair Organization P.O. No, Job No, etc.: Energy Northwest
   (c) Type Code Symbol Stamp: Not Applicable
   (d) Certificate Of Authorization No.: Not Applicable
   (e) Expiration Date: Not Applicable
4. **Identification Of System:** Residual Heat Removal (RHR) System
5. **(a) Applicable Construction Code:** ASME Section III, Code Class 2, 1971 Edition with Winter 1973 Addenda, Code Case: None
   (b) Applicable Edition Of ASME Section XI Utilized For Repairs Or Replacements: 1989 Edition with no Addenda, Code Case: None
6. **Identification Of Components Repaired Or Replaced And Replacement Components**

Name Of Component	Name Of Manufacturer	Manufacturer's Serial No	National Board No	Other I.D.	Year Built	Repaired, Replaced Or Replacement	ASME Code Stamped (Yes Or No) Code Class
RHR(1)-2B	WPPSS *	RHR(1)-2B-P1	N/A	N/A	1984	----------	Yes, Code Class 2
Valve For RHR-PS-16B	Dragon	PB 1407	N/A	N/A	2003	Replacement	Yes, Code Class 2
Valve For RHR-PS-19B	Dragon	PB 1408	N/A	N/A	2003	Replacement	Yes, Code Class 2

7. **Description Of Work Performed:** Installed new valves for RHR-PS-16B and RHR-PS-19B. The work was performed as follows:

RHR-PS-16B

1) Installed new valve Serial No PB 1407 for RHR-PS-16B.
2) Made required socket welds.
3) Performed visual examination on the final socket welds. Visual examination results acceptable.
4) Performed liquid penetrant (PT) examination on the final socket welds. Liquid penetrant (PT) examination results acceptable.

RHR-PS-19B

1) Installed new valve Serial No PB 1408 for RHR-PS-19B.
2) Made required socket welds.
3) Performed visual examination on the final socket welds. Visual examination results acceptable.
4) Performed liquid penetrant (PT) examination on the final socket welds. Liquid penetrant (PT) examination results acceptable.

NOTES -

1) * Company name changed from Washington Public Power Supply System (WPPSS) to Energy Northwest in 1999.
2) The existing ASME Code Stamped piping system in which new valve Serial No PB 1407 and valve Serial No PB 1408 were installed is Residual Heat Removal (RHR) piping system RHR(1)-2B-P1. This piping system is certified to comply with ASME Section III, Code Class 2, 1971 Edition with Winter 1973 Addenda requirements.
3) The new valve Serial No PB 1407 and valve Serial No PB 1408 are certified to comply with ASME Section III, Code Class 2, 1974 Edition with Summer 1975 Addenda requirements.

PLAN No 2-1792

ENERGY NORTHWEST
People·Vision·Solutions

FORM NIS-2 OWNER'S REPORT FOR REPAIRS OR REPLACEMENTS (Back)

8 Tests Conducted: Hydrostatic [ ] *Pneumatic* [ ] *Nominal Operating Pressure* [ ] *None* [X]

Test Pressure: Psig *Test Temperature:* °F

Component Design Pressure: Psig *Temperature:* °F

9. Remarks: See attached NPV-1 Code Data Reports for the following valves:
1) Valve Serial No PB 1407 for RHR-PS-16B.
2) Valve Serial No PB 1408 for RHR-PS-19B.

CERTIFICATE OF COMPLIANCE

We certify that the statements made in this Owner's Report are correct and this replacement *conforms to the rules of the ASME Code, Section XI.*
Type Code Symbol Stamp: Not Applicable
Certificate Of Authorization No.: Not Applicable
Expiration Date: Not Applicable

Prepared By Kuldip Singh - Program Lead Engineer (PLE) *Signed By* Kuldip Singh - Program Lead Engineer (PLE)

Date 12/11/03 *Date* 12/11/03

CERTIFICATE OF INSERVICE INSPECTION

I, the undersigned, holding a valid commission issued by the National Board of Boiler and Pressure Vessel Inspectors and the State of _____ *and employed by* _____ _____ *have inspected the components described in this Owner's Report during the period* _____ *to* _____ *and state to the best of my knowledge and belief, the Owner has performed examinations and taken corrective measures described in this Owner's Report in accordance with the requirements of the ASME Code, Section XI.*
By signing this certificate neither the Inspector nor his employer makes any warranty, expressed or implied, concerning the examinations and corrective measures described in this Owner's Report. Furthermore, neither the Inspector nor his employer shall be liable in any manner for any personal injury or property damage or a loss of any kind arising from or connected with this inspection.

Not Required - Replacement 1" NPS And Smaller *Commissions* _____
Inspector's Signature National Board, State, and Endorsements

Date _____

FORM NPV-1 N CERTIFICATE HOLDERS' DATA REPORT FOR NUCLEAR PUMPS OR VALVES*

As Required by the Provisions of the ASME Code, Section III, Div. 1 PLAN No. 2-1792

1. Manufactured by Dragon Valves, Inc., 13457 Excelsior Dr., Norwalk, CA. 90650
(Name and Address of N Certificate Holder)
2. Manufactured for Energy Northwest, P.O. Box 968, Richland, WA. 99352-0968
(Name and Address of Purchaser or Owner)
3. Location of Installation Energy Northwest, Columbia Generating Station, Richland, WA. 99352
(Name and Address)
4. Pump or Valve Valve. Nominal Inlet Size 1/2 (inch) Outlet Size 1/2 (inch)

	(a) Model No., Series No. or Type	(b) N Certificate Holder's Serial No.	(c) Canadian Registration No.	(d) Drawing No.	(e) Class	(f) Nat'l. Bd. No.	(g) Year Built
(1)	7N058SWD	PB1398	N/A	10580	2	N/A	2003
(2)		Thru		Rev. C			
(3)		PB1410					
(4)							
(5)							
(6)	VALVE FOR RHR-PS-16B, S/N PB1407						
(7)							
(8)							
(9)				Philip Swift			
(10)				12/10/03			

5. Instrument Valve (13 Pcs.)
(Brief description of service for which equipment was designed)

6. Design Conditions _____ (Pressure) psi _____ (Temperature) °F or Valve Pressure Class 1500 (1)
7. Cold Working Pressure 3600 psi at 100°F.
8. Pressure Retaining Pieces

Mark No.	Material Spec. No.	Manufacturer	Remarks
(a) Castings N/A			
(b) Forgings			
HT. 4234H	ASME SA182 Gr. F316	Ajax Forge Co.	Body
HT. A19167	ASME SA182 GR. F316	Ajax Forge Co.	Bonnet Yoke

(1) For manually operated valves only.

* Supplemental sheets in form of lists, sketches or drawings may be used provided (1) size is 8-1/2" x 11", (2) information in items 1, 2 and 5 on this Data Report is included on each sheet, and (3) each sheet is numbered and number of sheets is recorded at top of this form.

FORM NPV-1 (Back)

Mark No.	Material Spec. No.	Manufacturer	Remarks
(c) Bolting N/A			
(d) Other Parts			
HT. 712678	ASME SA564 GR. 630	Carpenter Tech. Corp.	Disc

9. Hydrostatic test 5400 psi. Disk Differential test pressure 3600 psi.

CERTIFICATE OF COMPLIANCE

We certify that the statements made in this report are correct and that this pump, or valve, conforms to the rules of construction of the ASME Code for Nuclear Power Plant Components. Section III, Div. I., Edition 1974, Addenda S'75 (Date), Code Case No. N/A. Date February 25, 2003

Signed Dragon Valves, Inc. (N Certificate Holder) by Mark A. Snyder

Our ASME Certificate of Authorization No. N-1033 to use the N (N) symbol expires 5/6/05 (Date).

CERTIFICATION OF DESIGN

Design information on file at Energy Northwest

Stress analysis report (Class 1 only) on file at N/A

Design specifications certified by (1) Abbas A. Mostala

PE State WA. Reg. No. 28777

Stress analysis certified by (1) N/A

PE State _____ Reg. No. _____

(1) Signature not required. List name only.

CERTIFICATE OF SHOP INSPECTION

I, the undersigned, holding a valid commission issued by the National Board of Boiler and Pressure Vessel Inspectors and the State or Province of CALIFORNIA and employed by HSB CT of HARTFORD, CT. have inspected the pump, or valve, described in this Data Report on 2-25 19 03, and state that to the best of my knowledge and belief, the N Certificate Holder has constructed this pump, or valve, in accordance with the ASME Code, Section III.

By signing this certificate, neither the Inspector nor his employer makes any warranty, expressed or implied, concerning the equipment described in this Data Report. Furthermore, neither the Inspector nor his employer shall be liable in any manner for any personal injury or property damage or a loss of any kind arising from or connected with this inspection.

Date 2-25 19 03.

J. O. [signature] (Inspector) Commissions NB 12050-N / CA-1969 (Nat'l Bd., State, Prov. and No.)

FORM NPV-1 N CERTIFICATE HOLDERS' DATA REPORT FOR NUCLEAR PUMPS OR VALVES*

As Required by the Provisions of the ASME Code, Section III, Div. 1 PLAN No. 2-1792

1. Manufactured by Dragon Valves, Inc., 13457 Excelsior Dr., Norwalk, CA. 90650
(Name and Address of N Certificate Holder)
2. Manufactured for Energy Northwest, P.O. Box 968, Richland, WA. 99352-0968
(Name and Address of Purchaser or Owner)
3. Location of Installation Energy Northwest, Columbia Generating Station, Richland, WA. 99352
(Name and Address)
4. Pump or Valve Valve. Nominal Inlet Size 1/2 (inch) Outlet Size 1/2 (inch)

	(a) Model No., Series No. or Type	(b) N Certificate Holder's Serial No.	(c) Canadian Registration No.	(d) Drawing No.	(e) Class	(f) Nat'l. Bd. No.	(g) Year Built
(1)	7N058SWD	PB1398	N/A	10580	2	N/A	2003
(2)		Thru		Rev. C			
(3)		PB1410					
(4)							
(5)							
(6)	VALVE FOR RHR-PS-19B, S/N PB1407						
(7)							
(8)							
(9)				Phillip Sims			
(10)				12/10/03			

5. Instrument Valve (13 Pcs.)
(Brief description of service for which equipment was designed)

6. Design Conditions _____ (Pressure) psi _____ (Temperature) °F or Valve Pressure Class 1500 (1)
7. Cold Working Pressure 3600 psi at 100°F.
8. Pressure Retaining Pieces

Mark No.	Material Spec. No.	Manufacturer	Remarks
(a) Castings N/A			
(b) Forgings			
HT. 4234H	ASME SA182 Gr. F316	Ajax Forge Co.	Body
HT. A19167	ASME SA182 GR. F316	Ajax Forge Co.	Bonnet Yoke

(1) For manually operated valves only.

* Supplemental sheets in form of lists, sketches or drawings may be used provided (1) size is 8-1/2" x 11", (2) information in items 1, 2 and 5 on this Data Report is included on each sheet, and (3) each sheet is numbered and number of sheets is recorded at top of this form.

FORM NPV-1 (Back)

Mark No.	Material Spec. No.	Manufacturer	Remarks
(c) Bolting N/A			
(d) Other Parts			
HT. 712678	ASME SA564 GR. 630	Carpenter Tech. Corp.	Disc

9. Hydrostatic test 5400 psi. Disk Differential test pressure 3600 psi.

CERTIFICATE OF COMPLIANCE

We certify that the statements made in this report are correct and that this pump, or valve, conforms to the rules of construction of the ASME Code for Nuclear Power Plant Components. Section III, Div. I., Edition 1974, Addenda S'75 (Date). Code Case No. N/A. Date February 25, 2003

Signed Dragon Valves, Inc. (N Certificate Holder) by Mark A. Snyder

Our ASME Certificate of Authorization No. N-1033 to use the N (N) symbol expires 5/6/05 (Date).

CERTIFICATION OF DESIGN

Design information on file at Energy Northwest

Stress analysis report (Class 1 only) on file at N/A

Design specifications certified by (1) Abbas A. Mostala

PE State WA. Reg. No. 28777

Stress analysis certified by (1) N/A

PE State _____ Reg. No. _____

(1) Signature not required. List name only.

CERTIFICATE OF SHOP INSPECTION

I, the undersigned, holding a valid commission issued by the National Board of Boiler and Pressure Vessel Inspectors and the State or Province of CALIFORNIA and employed by HSB CT of HARTFORD, CT. have inspected the pump, or valve, described in this Data Report on 2-25 19 03, and state that to the best of my knowledge and belief, the N Certificate Holder has constructed this pump, or valve, in accordance with the ASME Code, Section III.

By signing this certificate, neither the Inspector nor his employer makes any warranty, expressed or implied, concerning the equipment described in this Data Report. Furthermore, neither the Inspector nor his employer shall be liable in any manner for any personal injury or property damage or a loss of any kind arising from or connected with this inspection.

Date 2-25 19 03.

(Inspector) Commissions NB 12050-N / CA-1969 (Nat'l Bd., State, Prov. and No.)

PLAN No 2-1808

ENERGY NORTHWEST
People·Vision·Solutions

FORM NIS-2 OWNER'S REPORT FOR REPAIRS OR REPLACEMENTS
As Required By The Provisions Of The ASME Code Section XI

Date: 04/29/04
Sheet: 1 Of 1
Unit: Not Applicable

1. **Owner:** Energy Northwest
   Address: Columbia Generating Station, North Power Plant Loop, Richland, Washington, 99352
2. **Plant:** Columbia Generating Station
   Address: Columbia Generating Station, North Power Plant Loop, Richland, Washington, 99352
3. **(a) Work Performed By:** Energy Northwest
   (b) Repair Organization P.O. No, Job No, etc.: Energy Northwest
   (c) Type Code Symbol Stamp: Not Applicable
   (d) Certificate Of Authorization No.: Not Applicable
   (e) Expiration Date: Not Applicable
4. **Identification Of System:** Reactor Core Isolation Cooling (RCIC) System
5. **(a) Applicable Construction Code:** ASME Section III, Code Class 2, 1971 Edition with Winter 1973 Addenda, Code Case: None
   (b) Applicable Edition Of ASME Section XI Utilized For Repairs Or Replacements: 1989 Edition with no Addenda, Code Case: None
6. **Identification Of Components Repaired Or Replaced And Replacement Components**

Name Of Component	Name Of Manufacturer	Manufacturer's Serial No	National Board No	Other I.D.	Year Built	Repaired, Replaced Or Replacement	ASME Code Stamped (Yes Or No) Code Class
RCIC(50)-1	WPPSS *	RCIC(50)-1-P1	N/A	N/A	1983	----------	Yes, Code Class 2
RCIC-RV-19T	Crosby	N63028-00-0007	N/A	N/A	1994	Replaced	Yes, Code Class 2
RCIC-RV-19T	Crosby	N63028-00-0002	N/A	N/A	1980	Replacement	Yes, Code Class 2

7. **Description Of Work Performed:** Replaced existing relief valve RCIC-RV-19T. The replacement work was performed as follows:
   1) Removed existing relief valve RCIC-RV-19T, Serial No N63028-00-0007.
   2) Performed VT-3 visual examination on the existing studs for the relief valve outlet joint. VT-3 visual examination results acceptable.
   3) Performed VT-3 visual examination on the existing nuts for the relief valve outlet joint. VT-3 visual examination results acceptable.
   4) Performed VT-3 visual examination on the existing studs for the relief valve inlet joint. VT-3 visual examination results acceptable.
   5) Performed VT-3 visual examination on the existing nuts for the relief valve inlet joint. VT-3 visual examination results acceptable.
   6) Installed replacement relief valve RCIC-RV-19T, Serial No N63028-00-0002.
   7) Reinstalled VT-3 visually examined existing studs and nuts for the relief valve outlet joint.
   8) Reinstalled VT-3 visually examined existing studs and nuts for the relief valve inlet joint.
   9) Performed VT-2 visual examination during pressure test to confirm pressure boundary integrity of the relief valve inlet joint. No evidence of leakage during the pressure test.
   10) Performed visual inspections for any obstruction to confirm open flow path for the relief valve outlet (discharge) port to satisfy ASME Section XI, IWC-5221(d) requirements. Visual inspections results acceptable and open flow path was confirmed during visual inspections.

NOTES -

1) * Company name changed from Washington Public Power Supply System (WPPSS) to Energy Northwest in 1999.
2) The existing ASME Code Stamped piping system applicable to the replacement relief valve RCIC-RV-19T, Serial No N63028-00-0002 is Reactor Core Isolation Cooling (RCIC) piping system RCIC(50)-1-P1. This piping system is certified to comply with ASME Section III, Code Class 2, 1971 Edition with Winter 1973 Addenda requirements.
3) The replacement relief valve RCIC-RV-19T, Serial No N63028-00-0002 is certified to comply with ASME Section III, Code Class 2, 1977 Edition with Summer 1977 Addenda requirements.
4) The existing relief valve Serial No N63028-00-0007 was procured under PO No 236808, Procurement Evaluation No 3455 for Columbia Generating Station (WNP-2) use. The replacement relief valve Serial No N63028-00-0002 was originally procured for WNP-4 plant as 4MUS-V-133 but was approved for Columbia Generating Station (WNP-2) use as RCIC-RV-19T.

PLAN No 2-180E

ENERGY NORTHWEST
People·Vision·Solutions

FORM NIS-2 OWNER'S REPORT FOR REPAIRS OR REPLACEMENTS (Back)

8 Tests Conducted: Hydrostatic [ ] *Pneumatic* [ ] *Nominal Operating Pressure* [X] [ ]

Test Pressure: 58 Psig *Test Temperature:* 84° F

Component Design Pressure: 100 Psig *Temperature:* 170° F

9. Remarks: 1) See attached NV-1 Code Data Report for the replacement relief valve RCIC-RV-19T, Serial No N63028-00-0002.
2) Component design pressure of 100 Psig and design temperature of 170° F is for the relief valve inlet piping.

CERTIFICATE OF COMPLIANCE

We certify that the statements made in this Owner's Report are correct and this replacement *conforms to the rules of the ASME Code, Section XI.*
Type Code Symbol Stamp: Not Applicable
Certificate Of Authorization No.: Not Applicable
Expiration Date: Not Applicable

Prepared By Kuldip Singh - Program Lead Engineer (PLE) *Signed By* Kuldip Singh - Program Lead Engineer (PLE)

Date 4/30/04 *Date* 4/30/04

CERTIFICATE OF INSERVICE INSPECTION

I, the undersigned, holding a valid commission issued by the National Board of Boiler and Pressure Vessel Inspectors and the State of Washington *and employed by* Hartford Steam Boiler Of Connecticut of Hartford, Connecticut *have inspected the components described in this Owner's Report during the period* 4/22/03 *to* 5/5/04 *and state to the best of my knowledge and belief, the Owner has performed examinations and taken corrective measures described in this Owner's Report in accordance with the requirements of the ASME Code, Section XI.*
By signing this certificate neither the Inspector nor his employer makes any warranty, expressed or implied, concerning the examinations and corrective measures described in this Owner's Report. Furthermore, neither the Inspector nor his employer shall be liable in any manner for any personal injury or property damage or a loss of any kind arising from or connected with this inspection.

Inspector's Signature *Commissions* 7416 / 7156 WI NB
National Board, State, and Endorsements

Date 5/5/04

2/4/81
Corrected Report

CROSBY

CROSBY VALVE & GAGE COMPANY
WRENTHAM, MASS

PLAN No. 2-1808

DOCUMENT REVIEWED
MAY 4 '81 C.B. WESTON
BY: _____
U.E.&C.

FORM NV-1 FOR SAFETY AND SAFETY RELIEF VALVES
As Required by the Provisions of the ASME Code Rules

DATA REPORT
Safety and Safety Relief Valves

Q.C.-44D

Philip Smith
4/29/04

1. Manufactured By Crosby Valve & Gage Company, 43 Kendrick St., Wrentham, MA 02093
Name and Address

Model No. JO-25-WR Order No. N82783 Contract Date 7/27/78 National Board No. --

2. Manufactured For Washington Public Power Supply System, 3000 George Washington Way Richland, Washington Order No. G779-01
Name and Address

3. Owner Washington Public Power Supply System Nuclear Project No. 4
Name and Address

4. Location of Plant Richland, Washington RCIC-RV-19T

5. Valve Identification 4-MUS-V-133 Serial No. N63028-00-0002 Drawing No. DS-C-B63028 Rev. A *

Type Relief (Safety, Safety Relief, Pilot, Power Actuated) Orifice Size J Inch Pipe Size -- Inch Inlet 2 Inch Outlet 3 Inch

6. Set Pressure (psig) 100 Rated Temperature 200 F

Stamped Capacity 200 GPM Water at 70° F @ 10 % Overpressure -- Blowdown (psig) 10%

Hydrostatic Test (psig) Inlet 225 Outlet 100
(Applicable to Valves for Closed Systems Only)

Pressure Retaining Pieces

	Serial No. Identification	Material Specification Including Type or Grade
a. Castings		
Body	N93013-32-0001	ASME-SA351 Gr. CF8M
Bonnet	N93015-32-0002	ASME-SA351 Gr. CF8M
b. Bar Stock & Forgings		
Support Rods		
Nozzle	N93014-31-0005	ASME-SA479 Type 316
Disc K62825-31-0006	N88842-33-0010	ASME-SA479 Type 316
Spring Washers	N91025-41-1049 N91025-41-1013	ASTM-A-479-77 Type 410 ASME-SA479 Type 410
Adjusting Bolt	N92376-35-0045	ASME-SA193 Gr. B6
Spindle K56326-38-0050	N90142-50-0087	ASME-SA193 Gr. B6
c. Spring	NX2770-0038	ASTM-A-313-76 Type 316
d. Bolting		
e. Other Pieces		
Bonnet Stud	81039	ASME-SA193 Gr. B7
Bonnet Nut	2356	ASME-SA194 Gr. 2H

* Valves were originally manufactured and built to DS-C drawing Rev. 0. Approved drawing Rev. A changed no technical requirements. R.A. Cesarotti 2-4-81
J. Dinsmuir 3/13/81

1977

Summer 1971

CERTIFICATE OF [illegible]

I certify that the statements made on this report are correct to the best of my knowledge and that the requirements of the ASME Code for pressure vessels, Section VIII, Division 1, have been met. Signed, Dated December 1977, Cert. Expires [illegible]

(Date)

Date [illegible] Signed Crosby Valve & Gage Co.

(Authorized Inspector)

Nat. Board Registration of Authorization No. 1379 [illegible] 19

Expires December 30, 1980

(Date)

CERTIFICATION OF DESIGN

Design information on file at: Crosby Valve & Gage Company

Stress summary report (Class 1 only) on file at:

Design specifications certified by: Vendor Design

Registered Professional Engineer in the State of Massachusetts Reg. No. [illegible]

Design review certified by:

Registered Professional Engineer in the State of Reg. No.

(Signature and Registration Line name only)

CERTIFICATE OF SHOP INSPECTION

I, the undersigned, holding a valid commission issued by the National Board of Boiler and Pressure Vessel Inspectors and the State or Province of Massachusetts and employed by Factory Mutual Engineering and Research of Massachusetts, have inspected the pressure relief valve described in this data report on the date shown and state that to the best of my knowledge and belief, the manufacturer has constructed this pressure relief valve in accordance with the ASME Code for Pressure Vessels, Section VIII.

By signing this certificate, neither the inspector nor his employer makes any warranty, expressed or implied, concerning the equipment described in this data report. Furthermore, neither the inspector nor his employer shall be liable in any manner for any personal injury or property damage or a loss of any kind arising from or connected with this inspection.

Date 12/29/77

(Inspector) Commissions NB 5 1384

(Nat'l Bd., State, Province, etc.)

Reported to the Manufacturers Mutual Insurance Company [illegible]

3

PLAN No 2-1828

ENERGY NORTHWEST
People·Vision·Solutions

FORM NIS-2 OWNER'S REPORT FOR REPAIRS OR REPLACEMENTS
As Required By The Provisions Of The ASME Code Section XI

Date: 12/11/03
Sheet: 1 Of 1
Unit: Not Applicable

1. Owner: Energy Northwest
Address: Columbia Generating Station, North Power Plant Loop, Richland, Washington, 99352
2. Plant: Columbia Generating Station
Address: Columbia Generating Station, North Power Plant Loop, Richland, Washington, 99352
3. (a) Work Performed By: Energy Northwest
(b) Repair Organization P.O. No, Job No, etc.: Energy Northwest
(c) Type Code Symbol Stamp: Not Applicable
(d) Certificate Of Authorization No.: Not Applicable
(e) Expiration Date: Not Applicable
4. Identification Of System: Standby Liquid Control (SLC) System
5. (a) Applicable Construction Code: ASME Section III, Code Class 2, 1974 Edition with Winter 1974 Addenda, Code Case: None
(b) Applicable Edition Of ASME Section XI Utilized For Repairs Or Replacements: 1989 Edition with no Addenda, Code Case: None
6. Identification Of Components Repaired Or Replaced And Replacement Components

Name Of Component	Name Of Manufacturer	Manufacturer's Serial No	National Board No	Other I.D.	Year Built	Repaired, Replaced Or Replacement	ASME Code Stamped (Yes Or No) Code Class
Spare Relief Valve (SLC-RV-29B)	Lonergan	139407-1-2	N/A	N/A	1994	----------	Yes, Code Class 2
Disc	Lonergan	N/A	N/A	N/A	N/A	Replaced	No, Code Class 2
Disc	Lonergan	N/A	N/A	N/A	N/A	Replacement	No, Code Class 2

7. Description Of Work Performed: Replaced disc for spare relief valve Serial No 139407-1-2 (SLC-RV-29B). The replacement work was performed as follows:

1) Removed existing disc from the relief valve.
2) Installed replacement disc in the relief valve.

PLAN No 2-1828

ENERGY NORTHWEST
People·Vision·Solutions

FORM NIS-2 OWNER'S REPORT FOR REPAIRS OR REPLACEMENTS (Back)

8 Tests Conducted: Hydrostatic [ ] *Pneumatic* [ ] *Nominal Operating Pressure* [ ] *None* [X]

Test Pressure: Psig *Test Temperature:* °F

Component Design Pressure: Psig *Temperature:* °F

9. Remarks: None

CERTIFICATE OF COMPLIANCE

We certify that the statements made in this Owner's Report are correct and this replacement *conforms to the rules of the ASME Code, Section XI.*

Type Code Symbol Stamp: Not Applicable

Certificate Of Authorization No.: Not Applicable

Expiration Date: Not Applicable

Prepared By Kuldip Singh - Program Lead Engineer (PLE) *Signed By* Kuldip Singh - Program Lead Engineer (PLE)

Date 12/11/03 *Date* 12/11/03

CERTIFICATE OF INSERVICE INSPECTION

I, the undersigned, holding a valid commission issued by the National Board of Boiler and Pressure Vessel Inspectors and the State of Washington *and employed by* Hartford Steam Boiler Of Connecticut of Hartford, Connecticut *have inspected the components described in this Owner's Report during the period* 11/23/03 *to* 12/18/03 *and state to the best of my knowledge and belief, the Owner has performed examinations and taken corrective measures described in this Owner's Report in accordance with the requirements of the ASME Code, Section XI.*

By signing this certificate neither the Inspector nor his employer makes any warranty, expressed or implied, concerning the examinations and corrective measures described in this Owner's Report. Furthermore, neither the Inspector nor his employer shall be liable in any manner for any personal injury or property damage or a loss of any kind arising from or connected with this inspection.

Inspector's Signature *Commissions* 7486 W/ 7466 NI NS

National Board, State, and Endorsements

Date 12/18/03

PLAN No 2-1837

ENERGY NORTHWEST
People·Vision·Solutions

FORM NIS-2 OWNER'S REPORT FOR REPAIRS OR REPLACEMENTS
As Required By The Provisions Of The ASME Code Section XI

Date: 04/29/04
Sheet: 1 Of 1
Unit: Not Applicable

1. Owner: Energy Northwest
Address: Columbia Generating Station, North Power Plant Loop, Richland, Washington, 99352
2. Plant: Columbia Generating Station
Address: Columbia Generating Station, North Power Plant Loop, Richland, Washington, 99352
3. (a) Work Performed By: Energy Northwest
(b) Repair Organization P.O. No, Job No, etc.: Energy Northwest
(c) Type Code Symbol Stamp: Not Applicable
(d) Certificate Of Authorization No.: Not Applicable
(e) Expiration Date: Not Applicable
4. Identification Of System: Condensate (COND) System
5. (a) Applicable Construction Code: ASME Section III, Code Class 2 *, 1971 Edition with Winter 1973 Addenda, Code Case: None
(b) Applicable Edition Of ASME Section XI Utilized For Repairs Or Replacements: 1989 Edition with no Addenda, Code Case: None
6. Identification Of Components Repaired Or Replaced And Replacement Components

Name Of Component	Name Of Manufacturer	Manufacturer's Serial No	National Board No	Other I.D.	Year Built	Repaired, Replaced Or Replacement	ASME Code Stamped (Yes Or No) Code Class
COND(20)-1	WPPSS **	COND(20)-1	N/A	N/A	N/A	----------	No, Code Class 2 *
Valve (HPCS-PS-3A)	Dragon	PB1404	N/A	N/A	2003	Replacement	Yes, Code Class 2
Valve (HPCS-PS-3B)	Dragon	PB1403	N/A	N/A	2003	Replacement	Yes, Code Class 2

7. Description Of Work Performed: The replaced existing level switches HPCS-LS-3A and HPCS-LS-3B with new pressure switches HPCS-PS-3A and HPCS-PS-3B The replacement work was performed as follows:

1) Removed existing material.
2) Installed new piping material such as reducing inserts, cap and pipe.
3) Installed new tubing material such as tees, adapters and tubing.
4) Installed new valve (HPCS-PS-3A), Serial No PB1404.
5) Installed new valve (HPCS-PS-3B), Serial No PB1403.
6) Made required socket welds.
7) Performed visual examination on the final socket welds. Visual examination results acceptable.
8) Performed liquid penetrant (PT) examination on the final socket welds. Liquid penetrant (PT) examination results acceptable.
9) Installed new support material such as block clamps and cap screws.

NOTES -

1) The existing piping system in which the new piping material, tubing material, valves and support material was installed is Condensate (COND) piping system COND(20)-1. This piping system is certified to comply with ASME Section III, Code Class 2 *, 1971 Edition with Winter 1973 Addenda requirements.
2) The new valve (HPCS-PS-3A), Serial No PB1404 and new valve (HPCS-PS-3B), Serial No PB1403 are certified to comply with ASME Section III, Code Class 2, 1974 Edition with Summer 1975 Addenda requirements.
3) * New piping material, tubing material, valves and support material is installed in a Non ASME Code stamped piping system COND(20)-1. In accordance with Columbia Generating Station's Design Specification (DS) Division 15, Section 15B.1, Page 30, Paragraph 4.1.1, this piping system is required to be in general compliance with ASME Section III, Code Class 2 requirements. General compliance is defined as meeting the intent of ASME Section III, Code Class 2 requirements without requiring the ASME Code stamp. In view of this, the purpose of the ASME Section XI plan was to capture and implement ASME Section III, Code Class 2 requirements such as material, welding, NDE, etc during replacement work. The "Construction Code" and "Replacement Code" of ASME Section III 1971 Edition with Winter 1973 Addenda was implemented for this replacement work in order to be consistent with the mandatory Code for Contract 215 ASME Code Stamped piping systems.
4) ** Company name changed from Washington Public Power Supply System (WPPSS) to Energy Northwest in 1999.

PLAN No 2-1837

ENERGY NORTHWEST
People · Vision · Solutions

FORM NIS-2 OWNER'S REPORT FOR REPAIRS OR REPLACEMENTS (Back)

8 Tests Conducted: Hydrostatic [ ] **Pneumatic** [ ] **Nominal Operating Pressure** [ ] **None** [X]

Test Pressure: Psig **Test Temperature:** °F

Component Design Pressure: Psig **Temperature:** °F

9. Remarks: See attached NPV-1 Code Data Reports for the following new valves:

EPN No	Serial No
Valve (HPCS-PS-3A)	PB1404
Valve (HPCS-PS-3B)	PB1403

CERTIFICATE OF COMPLIANCE

We certify that the statements made in this Owner's Report are correct and this replacement *conforms to the rules of the ASME Code, Section XI.*

Type Code Symbol Stamp: Not Applicable

Certificate Of Authorization No.: Not Applicable

Expiration Date: Not Applicable

Prepared By Kuldip Singh — Kuldip Singh - Program Lead Engineer (PLE)

Date 5/3/04

Signed By Kuldip Singh — Kuldip Singh - Program Lead Engineer (PLE)

Date 5/3/04

CERTIFICATE OF INSERVICE INSPECTION

I, the undersigned, holding a valid commission issued by the National Board of Boiler and Pressure Vessel Inspectors and the State of _____ and employed by _____ have inspected the components described in this Owner's Report during the period _____ to _____ and state to the best of my knowledge and belief, the Owner has performed examinations and taken corrective measures described in this Owner's Report in accordance with the requirements of the ASME Code, Section XI.

By signing this certificate neither the Inspector nor his employer makes any warranty, expressed or implied, concerning the examinations and corrective measures described in this Owner's Report. Furthermore, neither the Inspector nor his employer shall be liable in any manner for any personal injury or property damage or a loss of any kind arising from or connected with this inspection.

Not Required - See Note 3
Inspector's Signature

Commissions _____
National Board, State, and Endorsements

Date _____

PLAN No. 2-1831

FORM NPV-1 N CERTIFICATE HOLDERS' DATA REPORT FOR NUCLEAR PUMPS OR VALVES*

As Required by the Provisions of the ASME Code, Section III, Div. 1

1. Manufactured by Dragon Valves, Inc., 13457 Excelsior Dr., Norwalk, CA. 90650
   (Name and Address of N Certificate Holder)
2. Manufactured for Energy Northwest, P.O. Box 968, Richland, WA. 99352-0968
   (Name and Address of Purchaser or Owner)
3. Location of Installation Energy Northwest, Columbia Generating Station, Richland, WA. 99352
   (Name and Address)
4. Pump or Valve Valve. Nominal Inlet Size 1/2 (inch) Outlet Size 1/2 (inch)

	(a) Model No., Series No. or Type	(b) N Certificate Holder's Serial No.	(c) Canadian Registration No.	(d) Drawing No.	(e) Class	(f) Nat'l. Bd. No.	(g) Year Built
(1)	7N058SWD	PB1398	N/A	10580	2	N/A	2003
(2)		Thru		Rev. C			
(3)		PB1410					
(4)							
(5)							
(6)		VALVE (HPCS-PS-3A), S/N PB1404					
(7)							
(8)							
(9)							
(10)							

4/29/04

5. Instrument Valve (13 Pcs.)
   (Brief description of service for which equipment was designed)

6. Design Conditions _____ (Pressure) psi _____ (Temperature) °F or Valve Pressure Class 1500 (1)
7. Cold Working Pressure 3600 psi at 100°F.
8. Pressure Retaining Pieces

Mark No.	Material Spec. No.	Manufacturer	Remarks
(a) Castings N/A			
(b) Forgings			
HT. 4234H	ASME SA182 Gr. F316	Ajax Forge Co.	Body
HT. A19167	ASME SA182 GR. F316	Ajax Forge Co.	Bonnet Yoke

(1) For manually operated valves only.

* Supplemental sheets in form of lists, sketches or drawings may be used provided (1) size is 8-1/2" x 11", (2) information in items 1, 2 and 5 on this Data Report is included on each sheet, and (3) each sheet is numbered and number of sheets is recorded at top of this form.

FORM NPV-1 (Back)

Mark No.	Material Spec. No..	Manufacturer	Remarks
(c) Bolting N/A			
(d) Other Parts			
HT. 712678	ASME SA564 GR. 630	Carpenter Tech. Corp.	Disc

9. Hydrostatic test 5400 psi. Disk Differential test pressure 3600 psi.

CERTIFICATE OF COMPLIANCE

We certify that the statements made in this report are correct and that this pump, or valve, conforms to the rules of construction of the ASME Code for Nuclear Power Plant Components. Section III, Div. I., Edition 1974, Addenda S'75 (Date), Code Case No. N/A. Date February 25, 2003

Signed Dragon Valves, Inc. (N Certificate Holder) by Mark A. Snyder

Our ASME Certificate of Authorization No. N-1033 to use the N (N) symbol expires 5/6/05 (Date).

CERTIFICATION OF DESIGN

Design information on file at Energy Northwest

Stress analysis report (Class 1 only) on file at N/A

Design specifications certified by (1) Abbas A. Mostala

PE State WA. Reg. No. 28777

Stress analysis certified by (1) N/A

PE State _____ Reg. No. _____

(1) Signature not required. List name only.

CERTIFICATE OF SHOP INSPECTION

I, the undersigned, holding a valid commission issued by the National Board of Boiler and Pressure Vessel Inspectors and the State or Province of CALIFORNIA and employed by HSB CT of HARTFORD, CT. have inspected the pump, or valve, described in this Data Report on 2-25 19 03, and state that to the best of my knowledge and belief, the N Certificate Holder has constructed this pump, or valve, in accordance with the ASME Code, Section III.

By signing this certificate, neither the Inspector nor his employer makes any warranty, expressed or implied, concerning the equipment described in this Data Report. Furthermore, neither the Inspector nor his employer shall be liable in any manner for any personal injury or property damage or a loss of any kind arising from or connected with this inspection.

Date 2-25 19 03.

E. O. [illegible] (Inspector) Commissions NB 12050-N / CA-1969 (Nat'l Bd., State, Prov. and No.)

PLAN No. 2-1837

FORM NPV-1 N CERTIFICATE HOLDERS' DATA REPORT FOR NUCLEAR PUMPS OR VALVES*

As Required by the Provisions of the ASME Code, Section III, Div. 1

1. Manufactured by Dragon Valves, Inc., 13457 Excelsior Dr., Norwalk, CA. 90650
(Name and Address of N Certificate Holder)
2. Manufactured for Energy Northwest, P.O. Box 968, Richland, WA. 99352-0968
(Name and Address of Purchaser or Owner)
3. Location of Installation Energy Northwest, Columbia Generating Station, Richland, WA. 99352
(Name and Address)
4. Pump or Valve Valve. Nominal Inlet Size 1/2 (inch) Outlet Size 1/2 (inch)

	(a) Model No., Series No. or Type	(b) N Certificate Holder's Serial No.	(c) Canadian Registration No.	(d) Drawing No.	(e) Class	(f) Nat'l. Bd. No.	(g) Year Built
(1)	7N058SWD	PB1398	N/A	10580	2	N/A	2003
(2)		Thru		Rev. C			
(3)		PB1410					
(4)							
(5)		VALVE (HPCS-PS-3B), S/N PB1403					
(6)							
(7)							
(8)							
(9)				Gaudin Supply			
(10)				4/29/04			

5. Instrument Valve (13 Pcs.)
(Brief description of service for which equipment was designed)

6. Design Conditions _____ (Pressure) psi _____ (Temperature) °F or Valve Pressure Class 1500 (1)
7. Cold Working Pressure 3600 psi at 100°F.
8. Pressure Retaining Pieces

Mark No.	Material Spec. No.	Manufacturer	Remarks
(a) Castings N/A			
(b) Forgings			
HT. 4234H	ASME SA182 Gr. F316	Ajax Forge Co.	Body
HT. A19167	ASME SA182 GR. F316	Ajax Forge Co.	Bonnet Yoke

(1) For manually operated valves only.

* Supplemental sheets in form of lists, sketches or drawings may be used provided (1) size is 8-1/2" x 11", (2) information in items 1, 2 and 5 on this Data Report is included on each sheet, and (3) each sheet is numbered and number of sheets is recorded at top of this form.

FORM NPV-1 (Back)

Mark No.	Material Spec. No.	Manufacturer	Remarks
(c) Bolting N/A			
(d) Other Parts			
HT. 712678	ASME SA564 GR. 630	Carpenter Tech. Corp.	Disc

9. Hydrostatic test 5400 psi. Disk Differential test pressure 3600 psi.

CERTIFICATE OF COMPLIANCE

We certify that the statements made in this report are correct and that this pump, or valve, conforms to the rules of construction of the ASME Code for Nuclear Power Plant Components. Section III, Div. I., Edition 1974, Addenda S'75 (Date), Code Case No. N/A. Date February 25, 2003

Signed Dragon Valves, Inc. (N Certificate Holder) by Mark A. Snyder

Our ASME Certificate of Authorization No. N-1033 to use the N (N) symbol expires 5/6/05 (Date).

CERTIFICATION OF DESIGN

Design information on file at Energy Northwest

Stress analysis report (Class 1 only) on file at N/A

Design specifications certified by (1) Abbas A. Mostala

PE State WA. Reg. No. 28777

Stress analysis certified by (1) N/A

PE State _____ Reg. No. _____

(1) Signature not required. List name only.

CERTIFICATE OF SHOP INSPECTION

I, the undersigned, holding a valid commission issued by the National Board of Boiler and Pressure Vessel Inspectors and the State or Province of CALIFORNIA and employed by HSB CT of HARTFORD, CT. have inspected the pump, or valve, described in this Data Report on 2-25 19 03, and state that to the best of my knowledge and belief, the N Certificate Holder has constructed this pump, or valve, in accordance with the ASME Code, Section III.

By signing this certificate, neither the Inspector nor his employer makes any warranty, expressed or implied, concerning the equipment described in this Data Report. Furthermore, neither the Inspector nor his employer shall be liable in any manner for any personal injury or property damage or a loss of any kind arising from or connected with this inspection.

Date 2-25 19 03.

E. O. [signature] (Inspector) Commissions NB 12050-N / CA-1969 (Nat'l Bd., State, Prov. and No.)

PLAN No 2-1842

ENERGY NORTHWEST
People·Vision·Solutions

FORM NIS-2 OWNER'S REPORT FOR REPAIRS OR REPLACEMENTS
As Required By The Provisions Of The ASME Code Section XI

Date: 12/17/04
Sheet: 1 Of 1
Unit: Not Applicable

1. **Owner:** Energy Northwest
   Address: Columbia Generating Station, North Power Plant Loop, Richland, Washington, 99352
2. **Plant:** Columbia Generating Station
   Address: Columbia Generating Station, North Power Plant Loop, Richland, Washington, 99352
3. **(a) Work Performed By:** Energy Northwest
   (b) Repair Organization P.O. No, Job No, etc.: Energy Northwest
   (c) Type Code Symbol Stamp: Not Applicable
   (d) Certificate Of Authorization No.: Not Applicable
   (e) Expiration Date: Not Applicable
4. **Identification Of System:** Residual Heat Removal (RHR) System
5. **(a) Applicable Construction Code:** ASME Section III, Code Class 2, 1974 Edition with Winter 1975 Addenda, Code Case: None
   (b) Applicable Edition Of ASME Section XI Utilized For Repairs Or Replacements: 1989 Edition with no Addenda, Code Case: None
6. **Identification Of Components Repaired Or Replaced And Replacement Components**

Name Of Component	Name Of Manufacturer	Manufacturer's Serial No	National Board No	Other I.D.	Year Built	Repaired, Replaced Or Replacement	ASME Code Stamped (Yes Or No) Code Class
RHR-V-60B	Marotta	102	1238	N/A	1981	----------	Yes, Code Class 2
Poppet (disc)	Enertech/Marotta	N/A	N/A	N/A	N/A	Replaced	No, Code Class 2
Poppet (disc)	Enertech/Marotta	KHO-2072	N/A	N/A	2003	Replacement	Yes, Code Class 2

7. **Description Of Work Performed:** Replaced existing poppet (disc) for valve RHR-V-60B. The replacement work was performed as follows:
   1) Disassembled valve to remove the existing poppet (disc).
   1) Removed existing valve poppet (disc).
   2) Installed replacement valve poppet (disc), Serial No KHO-2072 in the valve.
   3) Reassembled the valve.

NOTES -

1) Valve parts for Marotta valves are now being manufactured by Enertech.

PLAN No 2-1842

ENERGY NORTHWEST
People·Vision·Solutions

FORM NIS-2 OWNER'S REPORT FOR REPAIRS OR REPLACEMENTS (Back)

8 Tests Conducted: Hydrostatic [ ] *Pneumatic* [ ] *Nominal Operating Pressure* [ ] *None* [X]
Test Pressure: Psig *Test Temperature:* °F
Component Design Pressure: Psig *Temperature:* °F

9. Remarks (Applicable Manufacturer's Data Reports to be attached): See attached N-2 Code Data Report for the replacement poppet (disc), Serial No KHO-2072.

CERTIFICATE OF COMPLIANCE

We certify that the statements made in this Owner's Report are correct and this replacement *conforms to the rules of the ASME Code, Section XI.*
Type Code Symbol Stamp: Not Applicable
Certificate Of Authorization No.: Not Applicable
Expiration Date: Not Applicable

Prepared By Kuldip Singh
Kuldip Singh - Program Lead Engineer (PLE)
Date 12/17/04

Signed By Kuldip Singh
Kuldip Singh - Program Lead Engineer (PLE)
Date 12/17/04

CERTIFICATE OF INSERVICE INSPECTION

I, the undersigned, holding a valid commission issued by the National Board of Boiler and Pressure Vessel Inspectors and the State of _____ *and employed by* _____ _____ *have inspected the components described in this Owner's Report during the period* _____ *to* _____ *and state to the best of my knowledge and belief, the Owner has performed examinations and taken corrective measures described in this Owner's Report in accordance with the requirements of the ASME Code, Section XI.*
By signing this certificate neither the Inspector nor his employer makes any warranty, expressed or implied, concerning the examinations and corrective measures described in this Owner's Report. Furthermore, neither the Inspector nor his employer shall be liable in any manner for any personal injury or property damage or a loss of any kind arising from or connected with this inspection.

Not Required - Replacement 1" NPS And Smaller
Inspector's Signature

Commissions _____
National Board, State, and Endorsements

Date _____

PLAN NO. 2-1842

FORM N-2 N OR NPT CERTIFICATE HOLDERS' DATA REPORT FOR IDENTICAL NUCLEAR PARTS AND APPURTENANCES*

As Required by the Provisions of the ASME Code, Section III, Division 1

Not To Exceed One Day's Production

1. Manufactured and certified by Enertech, A Div. of Curtiss-Wright Flow Control Corp.; 2950 Birch St.; Brea, CA 92821 (name and address of certificate holder)
2. Manufactured for Energy Northwest; P.O. Box 968; Richland, WA 99352-0968 (name and address of purchaser)
3. Location of installation Columbia Generating Station; North Powerplant Loop; Richland, WA 99352 (name and address)
4. Type 188590-9902 (drawing no.) SA-182 F316 (mat'l. spec. no.) 75,000 PSI (tensile strength) N/A (CRN) 2003 (year built)
5. ASME Code, Section III: 1974 (edition) Winter 1975 (addenda) 2 (class) none (Code Case no.)
6. Fabricated in accordance with Const. Spec. (Div. 2 only) N/A (No.) Revision N/A Date N/A
7. Remarks: Qty. 2 Valve Poppet (Disc), P/N: 188590-9902, ENERTECH Project No.: 810026

   Due to size & configuation, poppets are identified (tagged) with material heat code /serial number (KHO-2071 and KHO-2072), heat number (70203) and material specification (SA182 F316).
8. Nom. thickness (in.) 0.900 Min. design thickness (in.) 0.239 Dia. ID (ft. & in.) 1.06" Length overall (ft. & in.) 2.53"
9. When applicable, Certificate Holders' data reports are attached for each item of this report:

Part or Appurtenance Serial Number	National Board No. in Numerical Order	Part or Appurtenance Serial Number	National Board Number in Numerical Order
(1) KHO-2071	N/A	(26)	
(2) KHO-2072	N/A	(27)	
(3)		(28)	
(4)		(29)	
(5)		(30)	
(6) POPPET (DISC), S/N KHO-2072		(31)	
(7)		(32)	
(8)		(33)	
(9)		(34)	
(10)		(35)	
(11)		(36)	
(12)		(37)	
(13)		(38)	
(14)		(39)	
(15)		(40)	
(16)		(41)	
(17)		(42)	
(18)		(43)	
(19)		(44)	
(20)		(45)	
(21)		(46)	
(22)		(47)	
(23)		(48)	
(24)		(49)	
(25)		(50)	

10. Design pressure 500 psi Temp. 480 °F. Hydro. test pressure N/A (when applicable) at temp. °F.

*Supplemental information in the form of lists, sketches, or drawings may be used provided (1) size is 8½ X 1, (2) information in items 2 and 3 on this data report is included on each sheet, (3) each sheet is numbered and the number of sheets is recorded at the top of this form.

This form (E00040) may be obtained from the Order Dept., ASME, 345 E. 47th St., New York, N.Y. 10017.

FORM N-2 (back)

Mfr. Serial No. KHO-2071 and KHO-2072

CERTIFICATE OF DESIGN

Design specifications certified by Slawomir Kowalski (when applicable) P. E. state NJ Reg. no. 21097

Design report* certified by N/A (when applicable) P. E. state _____ Reg. no. _____

CERTIFICATE OF SHOP COMPLIANCE

We certify that the statements made in this report are correct and that this (these) 188590-9902 Poppet, Valve conform to the rules of construction of the ASME Code, Section III.

NPT Certificate of Authorization no. N-2827 Expires October 11, 2005

Date 8/29/03 Name Enertech, A Div. of Curtiss-Wright Flow Control Corp. (NPT Certificate Holder) Signed [signature] (authorized representative)

CERTIFICATE OF SHOP INSPECTION

I, the undersigned, holding a valid commission issued by the National Board of Boiler and Pressure Vessel Inspectors and the state or province of California and employed by HSB CT of Connecticut have inspected these items described in this data report on 8-29-03, and state that to the best of my knowledge and belief, the Certificate Holder has fabricated these parts or appurtenances in accordance with the ASME Code, Section III. Each part listed has been authorized for stamping on the date shown above.

By signing this certificate, neither the inspector nor his employer makes any warranty, expressed or implied, concerning the equipment described in this data report. Furthermore, neither the inspector nor his employer shall be liable in any manner for any personal injury or property damage or loss of any kind arising from or connected with this inspection.

Date 8-29-03 Signed [signature] (Authorized Inspector) Commissions CA 1494 (Nat'l. Bd. (incl. endorsements) state or prov. and no.)

SATISFACTORY X UNSATISFACTORY ____

L. Peters II 9/4/03

RECEIPT INSPECTOR / LEVEL / DATE

PLAN No 2-1843

ENERGY NORTHWEST
People·Vision·Solutions

FORM NIS-2 OWNER'S REPORT FOR REPAIRS OR REPLACEMENTS
As Required By The Provisions Of The ASME Code Section XI

1. Owner: Energy Northwest
Address: Columbia Generating Station, North Power Plant Loop, Richland, Washington, 99352
2. Plant: Columbia Generating Station
Address: Columbia Generating Station, North Power Plant Loop, Richland, Washington, 99352

Date: 11/08/04
Sheet: 1 Of 1
Unit: Not Applicable

3. (a) Work Performed By: Energy Northwest
(b) Repair Organization P.O. No, Job No, etc.: Energy Northwest
(c) Type Code Symbol Stamp: Not Applicable
(d) Certificate Of Authorization No.: Not Applicable
(e) Expiration Date: Not Applicable
4. Identification Of System: Reactor Recirculation Cooling (RRC) System
5. (a) Applicable Construction Code: ASME Section III, Code Class 1, 1974 Edition with Summer 1976 Addenda, Code Case: None
(b) Applicable Edition Of ASME Section XI Utilized For Repairs Or Replacements: 1989 Edition with no Addenda, Code Case: None
6. Identification Of Components Repaired Or Replaced And Replacement Components

Name Of Component	Name Of Manufacturer	Manufacturer's Serial No	National Board No	Other I.D.	Year Built	Repaired, Replaced Or Replacement	ASME Code Stamped (Yes Or No) Code Class
Pump*	Bingham	00N04*	473	N/A	1981	----------	Yes, Code Class 1
Seal Holder*	Bingham	N01-1*	N/A	N/A	1981	Repaired	No, Code Class 1*
Upper Seal Gland*	Bingham	N01-4*	N/A	N/A	1981	Replacement	No, Code Class 1*

7. Description Of Work Performed: Modified seal holder Serial No N01-1 (Seal holder for pumps RRC-P-1A and RRC-P-1B). The repair and replacement work was performed as follows:
1) Ground/machined the radius for seal holder Serial No N01-1 to provide installation clearance for the Swagelok male elbow.
2) Performed liquid penetrant (PT) examination on the ground/machined surfaces of seal holder Serial No N01-1. Liquid penetrant (PT) examination results acceptable.
3) Assembled spare mechanical seal using the following parts:
Spare used seal holder Serial No N01-1.
Spare used upper seal gland Serial No N01-4.

NOTES -
1) * The origin and the acceptability of the spare used seal holder and spare used upper seal gland is as follows:
The spare used seal holder Serial No N01-1 and spare used upper seal gland Serial No N01-4 are from a pump, Serial No 00N04, National Board No 473. This pump was furnished by Bingham Willamette to Black Fox plant. This plant was later cancelled. There is no ASME Code stamping nor ASME Code Data Report for the spare used seal holder Serial No N01-1 and spare used upper seal gland Serial No N01-4 since these items were part of an ASME Section III, Code Class 1 stamped pump with NPV-1 Code Data Report for Serial No 00N04, National Board No 473. The acceptability of the spare seal holder and spare upper seal gland is documented in ASME Section XI Plan No 2-0357.

PLAN No 2-1843

ENERGY NORTHWEST
People · Vision · Solutions

FORM NIS-2 OWNER'S REPORT FOR REPAIRS OR REPLACEMENTS (Back)

8 Tests Conducted: Hydrostatic [ ] **Pneumatic** [ ] **Nominal Operating Pressure** [ ] **None** [X]

Test Pressure: Psig **Test Temperature:** °F

Component Design Pressure: Psig **Temperature:** °F

9. Remarks (Applicable Manufacturer's Data Reports to be attached): See attached NPV-1 Code Data Report for pump, Serial No 00N04, National Board No 473. The spare used seal holder Serial No N01-1 and spare used upper seal gland Serial No N01-4 is from a pump, Serial No 00N04, National Board No 473.

CERTIFICATE OF COMPLIANCE

We certify that the statements made in this Owner's Report are correct and this repair and replacement *conforms to the rules of the ASME Code, Section XI.*

Type Code Symbol Stamp: Not Applicable

Certificate Of Authorization No.: Not Applicable

Expiration Date: Not Applicable

Prepared By Kuldip Singh - Program Lead Engineer (PLE) **Signed By** Kuldip Singh - Program Lead Engineer (PLE)

Date 11/8/04 **Date** 11/8/04

CERTIFICATE OF INSERVICE INSPECTION

I, the undersigned, holding a valid commission issued by the National Board of Boiler and Pressure Vessel Inspectors and the State of Washington *and employed by* Hartford Steam Boiler Of Connecticut of Hartford, Connecticut *have inspected the components described in this Owner's Report during the period* 9-1-03 *to* 11-9-04 *and state to the best of my knowledge and belief, the Owner has performed examinations and taken corrective measures described in this Owner's Report in accordance with the requirements of the ASME Code, Section XI.*

By signing this certificate neither the Inspector nor his employer makes any warranty, expressed or implied, concerning the examinations and corrective measures described in this Owner's Report. Furthermore, neither the Inspector nor his employer shall be liable in any manner for any personal injury or property damage or a loss of any kind arising from or connected with this inspection.

Inspector's Signature **Commissions** 7486W NI NS
National Board, State, and Endorsements

Date 11/9/04

PLAN No. 2-1843

SEAL HOLDER S/N N01-1 AND
UPPER SEAL GLAND S/N N01-4
FROM BLACK FOX PUMP S/N 00N04

GE PO AG 909

SO 00N04

Philip Gupb
10/28/04

FORM NPV-1 N CERTIFICATE HOLDERS' DATA REPORT FOR NUCLEAR PUMPS OR VALVES*
As Required by the Provisions of the ASME Code, Section III, Div. 1

1. Manufactured by Bingham-Willamette Co., 2800 NW Front Ave., Portland, Oregon 97210 (Name and Address of N Certificate Holder)
2. Manufactured for General Electric for resale to Oklahoma Public Services (Name and Address of Purchaser or Owner)
3. Location of Installation Black Fox Plant Site near Enola, Oklahoma (Name and Address)
4. Pump or Valve 00N01. Nominal Inlet Size 24 (inch) Outlet Size 22 (inch)

	(a) Model No., Series No. or Type	(b) N Certificate Holder's Serial No.	(c) Canadian Registration No.	(d) Drawing No.	(e) Class	(f) Nat'l Bd. No.	(g) Year Built
(1)	RV	00N04	NA	H-5083 Rev. 0	1	N8-473	1981
(2)							
(3)							
(4)							
(5)							
(6)							
(7)							
(8)							
(9)							
(10)							

5. Recirculation Pump (Brief description of service for which equipment was designed)
6. Design Conditions 1650 (Pressure) psi 575 (Temperature) °F or Valve Pressure Class NA (1)
7. Cold Working Pressure 1650 psi at 100°F.
8. Pressure Retaining Pieces

Mark No.	Material Spec. No.*	Manufacturer**	Remarks
(a) Castings			
771127	SA-351 Gr CF8A	Kubota Ltd.	Volute Case (103-1)
P4717	SA-351 Gr CF8M	Wisconsin Cent.	Stuffing Box (113-1)
P6758	SA-351 Gr CF8	Wisconsin Cent.	Seal Holder (402-1)
A7238	SA-351 Gr CF8	Wisconsin Cent.	Gland, Upper (405-1)
G9932	SA-182 Tp 304	Rocky Mtn Nuclear	Clamp Set (603-1)
(b) 67607-1A1	SA-240 F316	G.O. Carlson	Valve-body (610-1)
67725-2B1	SA-240 F316	G.O. Carlson	Valve bonnet (610-2)
M0253	SA-213 T304	Plymouth Tube	Coil (613-4)
48719	SA-182 F304	Viking	Thermowell (606-5, 607-8, 609-7)
(b) Forgings 48719	SA-182 F304	Viking	Flange (613-1,-3)
48719	SA-182 F304	Viking	Nozzle (113-3 thru -5)
17229	SA-182 F316	Viking	Thrust Ring (119)
B1-18417	SA-350 Gr LF2	Earl M. Jorgensen	Pump Flange (501-2)
523036	SA-350 Gr LF2	Coulter Steel	Plug (503)
G9932	SA-182 F304	Rocky Mtn Nuclear	R-Con Flange (606-3, 607-6, 609-9)
55729 (VKB)	SA-182 F304	Standard	Tee (606-4)
B654259	SA-182 F304	Western Forge	Flange (607-5)
625389 (VMQ)	SA-182 F304	Standard	Tee (607-7)
A16852 (VHH)	SA-182 F304	Standard	Plug (608)

(1) For manually operated valves only.

* Supplemental sheets in form of lists, sketches or drawings may be used provided (1) size is 8-1/2" x 11", (2) information in items 1, 2 and 5 on this Data Report is included on each sheet, and (3) each sheet is numbered and number of sheets is recorded at top of this form.

(10/77) This form (E00037) may be obtained from the Order Dept., ASME, 345 E. 47th St., New York, N.Y. 10017.

JAC

SO 00N04
CODE DATA REPORT
GE PO AG 909
PAGE 13

FORM NPV-1 (Back)

Mark No.	Material Spec. No.	Manufacturer	Remarks
(c) Bolting			
115814 & 125913	SA-540 Gr B23 Cl 5	Jorgensen	Stud, Case (108)
8062630	SA-194 Gr 7	Metrix Mfg.	Nut, Case (109)
RX, RXX & CF	SA-194 Gr 8	Rocky Mtn Nuclear	Nut, Clamp (603-3)
DJ	SA-193 Gr B8	Rocky Mtn Nuclear	Stud, Clamp (603-2)
L5382 (A&B)	N2 Data Report	Western Piping	Heat Exchanger (519)
A6502	SA-36	Lukens	Strut Lugs (501-10, -11)
8654156	SA-182 F304	Western Forge	Flange (113-6)
T68105	SA-516 Gr 70	U.S. Steel	Stiffener (501-5)
A6502	SA-36	Lukens	Motor Flange (501-1)
(d) Other Parts 04967	SA-36	Lukens	Hanger Lug (501-4)
3148-1	SA-240 Tp 304	G.O. Carlson	Lugs (113-7)
8994	SA-479 Tp 304	Metrix Mfg.	Elbow (402-2)
1-47587	SA-240 Tp 304	Eagle Metals	Bracket (402-4)
T68105	SA-516 Gr 70	U.S. Steel	Barrel (501-3)
A6502	SA-36	Lukens Steel	Brace (501-8, 9)
B20128	SA-312 Tp 304	Combustion Engr'g	Pipe (606-1,607-1 thru -4)
M2972	SA-312 Tp 304	Capitol Pipe	Pipe (609-1 thru -5)
837615 (V10)	SA-182 F304	Standard	Tee (609-6)
623346, 614320	SA-182 F304	Western Forge	Flange (609-8)

9. Hydrostatic test 2065 psi. Disk Differential test pressure NA psi.

CERTIFICATE OF COMPLIANCE

We certify that the statements made in this report are correct and that this pump, or valve, conforms to the rules of construction of the ASME Code for Nuclear Power Plant Components, Section III, Div. I, Edition 1974 Addenda Summer '76 (Date), Code Case No. 1567 & 1820 Date MAY 27 1981

Signed Bingham-Willamette Company (N Certificate Holder) by George Oller

Our ASME Certificate of Authorization No. N-1654 to use the N (N) symbol expires 2/28/83 (Date)

CERTIFICATION OF DESIGN

Design information on file at Bingham-Willamette Company

Stress analysis report (Class 1 only) on file at Bingham-Willamette Company

Design specifications certified by (1) H. Tafarrodi

PE State Calif. Reg. No. 15110

Stress analysis certified by (1) Narsim Ganti

PE State Calif. Reg. No. 17612

(1) Signature not required. List name only.

CERTIFICATE OF SHOP INSPECTION

I, the undersigned, holding a valid commission issued by the National Board of Boiler and Pressure Vessel Inspectors and the State or Province of Oregon and employed by Department of Commerce have inspected the pump, or valve, described in this Data Report on MAY 27 1981 19___, and state that to the best of my knowledge and belief, the N Certificate Holder has constructed this pump, or valve, in accordance with the ASME Code, Section III.

By signing this certificate, neither the Inspector nor his employer makes any warranty, expressed or implied, concerning the equipment described in this Data Report. Furthermore, neither the Inspector nor his employer shall be liable in any manner for any personal injury or property damage or a loss of any kind arising from or connected with this inspection.

Date MAY 27 1981 19___

(Inspector) Commissions NB 8037 (Nat'l Bd., State, Prov. and No.)

SO 00N04

CODE DATA REPORT

GE PO AG 909

PAGE 14

PLAN No 2-1874

ENERGY NORTHWEST
People·Vision·Solutions

FORM NIS-2 OWNER'S REPORT FOR REPAIRS OR REPLACEMENTS
As Required By The Provisions Of The ASME Code Section XI

Date: 07/14/05
Sheet: 1 Of 1
Unit: Not Applicable

1. **Owner:** Energy Northwest
   Address: Columbia Generating Station, North Power Plant Loop, Richland, Washington, 99352
2. **Plant:** Columbia Generating Station
   Address: Columbia Generating Station, North Power Plant Loop, Richland, Washington, 99352
3. **(a) Work Performed By:** Energy Northwest
   (b) Repair Organization P.O. No, Job No, etc.: Energy Northwest
   (c) Type Code Symbol Stamp: Not Applicable
   (d) Certificate Of Authorization No.: Not Applicable
   (e) Expiration Date: Not Applicable
4. **Identification Of System:** Service Water (SW) System
5. **(a) Applicable Construction Code:** ASME Section III, Code Class 3, 1971 Edition with Winter 1973 Addenda, Code Case: None
   (b) Applicable Edition Of ASME Section XI Utilized For Repairs Or Replacements: 1989 Edition with no Addenda, Code Case: None
6. **Identification Of Components Repaired Or Replaced And Replacement Components**

Name Of Component	Name Of Manufacturer	Manufacturer's Serial No	National Board No	Other I.D.	Year Built	Repaired, Replaced Or Replacement	ASME Code Stamped (Yes Or No) Code Class
SW(21)-2	WPPSS*	SW(21)-2-P1	N/A	N/A	1983	----------	Yes, Code Class 3

7. **Description Of Work Performed:** Replaced existing piping material associate with valve SW-V-146D. The replacement work was performed as follows:
   1) Removed existing piping material.
   2) Installed replacement piping material such as elbow and pipe.
   3) Made required socket welds.
   4) Performed visual examination on the final socket welds. Visual examination results acceptable.

NOTES -

2) * Company name changed from Washington Public Power Supply System (WPPSS) to Energy Northwest (EN) in 1999.

PLAN No 2-1874

ENERGY NORTHWEST
People·Vision·Solutions

FORM NIS-2 OWNER'S REPORT FOR REPAIRS OR REPLACEMENTS (Back)

8 Tests Conducted: Hydrostatic [ ] Pneumatic [ ] Nominal Operating Pressure [ ] None [X]
Test Pressure: Psig Test Temperature: °F
Component Design Pressure: Psig Temperature: °F

9. Remarks (Applicable Manufacturer's Data Reports to be attached): None

CERTIFICATE OF COMPLIANCE

We certify that the statements made in this Owner's Report are correct and this replacement conforms to the rules of the ASME Code, Section XI.
Type Code Symbol Stamp: Not Applicable
Certificate Of Authorization No.: Not Applicable
Expiration Date: Not Applicable

Prepared By Kuldip Singh Signed By Kuldip Singh
Kuldip Singh - Program Lead Engineer (PLE) Kuldip Singh - Program Lead Engineer (PLE)
Date 7/14/05 Date 7/14/05.

CERTIFICATE OF INSERVICE INSPECTION

I, the undersigned, holding a valid commission issued by the National Board of Boiler and Pressure Vessel Inspectors and the State of _____ and employed by _____ have inspected the components described in this Owner's Report during the period _____ to _____ and state to the best of my knowledge and belief, the Owner has performed examinations and taken corrective measures described in this Owner's Report in accordance with the requirements of the ASME Code, Section XI.
By signing this certificate neither the Inspector nor his employer makes any warranty, expressed or implied, concerning the examinations and corrective measures described in this Owner's Report. Furthermore, neither the Inspector nor his employer shall be liable in any manner for any personal injury or property damage or a loss of any kind arising from or connected with this inspection.

Not Required - Replacement 1" NPS And Smaller Commissions _____
Inspector's Signature National Board, State, and Endorsements
Date _____

PLAN No 2-1879

ENERGY NORTHWEST
People·Vision·Solutions

FORM NIS-2 OWNER'S REPORT FOR REPAIRS OR REPLACEMENTS
As Required By The Provisions Of The ASME Code Section XI

1. Owner: Energy Northwest
Address: Columbia Generating Station, North Power Plant Loop, Richland, Washington, 99352
2. Plant: Columbia Generating Station
Address: Columbia Generating Station, North Power Plant Loop, Richland, Washington, 99352

Date: 12/11/03
Sheet: 1 Of 1
Unit: Not Applicable

3. (a) Work Performed By: Energy Northwest
(b) Repair Organization P.O. No, Job No, etc.: Energy Northwest
(c) Type Code Symbol Stamp: Not Applicable
(d) Certificate Of Authorization No.: Not Applicable
(e) Expiration Date: Not Applicable
4. Identification Of System: Service Water (SW) System
5. (a) Applicable Construction Code: ASME Section III, Code Class 3, 1971 Edition with Winter 1973 Addenda, Code Case: None
(b) Applicable Edition Of ASME Section XI Utilized For Repairs Or Replacements: 1989 Edition with no Addenda, Code Case: None
6. Identification Of Components Repaired Or Replaced And Replacement Components

Name Of Component	Name Of Manufacturer	Manufacturer's Serial No	National Board No	Other I.D.	Year Built	Repaired, Replaced Or Replacement	ASME Code Stamped (Yes Or No) Code Class
SW(22)-2	WPPSS *	SW(22)-2-P1	N/A	N/A	1983	----------	Yes, Code Class 3

7. Description Of Work Performed: Fabricated replacement restricting orifice plate for SW-FE-2A. The work was performed as follows:

1) Cut the plate material to the required dimensions.
2) Fabricated/machined the restricting orifice plate to the final dimensions.
3) Final finished the restricting orifice plate surfaces.
4) Marked the required information on the restricting orifice plate handle (paddle).

NOTES -

1) * Company name changed from Washington Public Power Supply System (WPPSS) to Energy Northwest in 1999.
2) The fabricated replacement restricting orifice plate for SW-FE-2A was installed in accordance with ASME Section XI Plan No 2-1880.

PLAN No 2-1879

ENERGY NORTHWEST
People·Vision·Solutions

FORM NIS-2 OWNER'S REPORT FOR REPAIRS OR REPLACEMENTS (Back)

8 Tests Conducted: Hydrostatic [ ] Pneumatic [ ] Nominal Operating Pressure [ ] None [X]
Test Pressure: Psig Test Temperature: °F
Component Design Pressure: Psig Temperature: °F

9. Remarks: None

CERTIFICATE OF COMPLIANCE

We certify that the statements made in this Owner's Report are correct and this replacement conforms to the rules of the ASME Code, Section XI.
Type Code Symbol Stamp: Not Applicable
Certificate Of Authorization No.: Not Applicable
Expiration Date: Not Applicable

Prepared By Kuldip Singh - Program Lead Engineer (PLE) Signed By Kuldip Singh - Program Lead Engineer (PLE)

Date 12/11/03 Date 12/11/03

CERTIFICATE OF INSERVICE INSPECTION

I, the undersigned, holding a valid commission issued by the National Board of Boiler and Pressure Vessel Inspectors and the State of Washington and employed by Hartford Steam Boiler Of Connecticut of Hartford, Connecticut have inspected the components described in this Owner's Report during the period 10/14/03 to 12/18/03 and state to the best of my knowledge and belief, the Owner has performed examinations and taken corrective measures described in this Owner's Report in accordance with the requirements of the ASME Code, Section XI.
By signing this certificate neither the Inspector nor his employer makes any warranty, expressed or implied, concerning the examinations and corrective measures described in this Owner's Report. Furthermore, neither the Inspector nor his employer shall be liable in any manner for any personal injury or property damage or a loss of any kind arising from or connected with this inspection.

Inspector's Signature Commissions 7486 / 7486 N.E. WS
National Board, State, and Endorsements

Date 12/18/03

PLAN No 2-1880

ENERGY NORTHWEST
People·Vision·Solutions

FORM NIS-2 OWNER'S REPORT FOR REPAIRS OR REPLACEMENTS
As Required By The Provisions Of The ASME Code Section XI

Date: 12/11/03
Sheet: 1 Of 1
Unit: Not Applicable

1. **Owner:** Energy Northwest
   Address: Columbia Generating Station, North Power Plant Loop, Richland, Washington, 99352
2. **Plant:** Columbia Generating Station
   Address: Columbia Generating Station, North Power Plant Loop, Richland, Washington, 99352
3. (a) **Work Performed By:** Energy Northwest
   (b) **Repair Organization P.O. No, Job No, etc.:** Energy Northwest
   (c) **Type Code Symbol Stamp:** Not Applicable
   (d) **Certificate Of Authorization No.:** Not Applicable
   (e) **Expiration Date:** Not Applicable
4. **Identification Of System:** Service Water (SW) System
5. (a) **Applicable Construction Code:** ASME Section III, Code Class 3, 1971 Edition with Winter 1973 Addenda, Code Case: None
   (b) **Applicable Edition Of ASME Section XI Utilized For Repairs Or Replacements:** 1989 Edition with no Addenda, Code Case: N-416-1
6. **Identification Of Components Repaired Or Replaced And Replacement Components**

Name Of Component	Name Of Manufacturer	Manufacturer's Serial No	National Board No	Other I.D.	Year Built	Repaired, Replaced Or Replacement	ASME Code Stamped (Yes Or No) Code Class
SW(22)-2	WPPSS *	SW(22)-2-P1	N/A	N/A	1983	----------	Yes, Code Class 3

7. **Description Of Work Performed:** Replaced existing restricting orifice plate for SW-FE-2A. The replacement work was performed as follows:
   1) Removed existing restricting orifice plate.
   2) Installed replacement restricting orifice plate.
   3) Installed replacement studs associated with restricting plate orifice bolted flanged joint.
   4) Installed replacement nuts associated with restricting orifice plate bolted flanged joint.
   5) Performed VT-2 visual examination during pressure test to confirm pressure boundary integrity of the joint. No evidence of leakage during the pressure test.

NOTES -

1) * Company name changed from Washington Public Power Supply System (WPPSS) to Energy Northwest in 1999.
2) The replacement restricting orifice plate for SW-FE-2A was previously fabricated in accordance with ASME Section XI Plan No 2-1879.

PLAN No 2-1880

ENERGY NORTHWEST
People·Vision·Solutions

FORM NIS-2 OWNER'S REPORT FOR REPAIRS OR REPLACEMENTS (Back)

8 Tests Conducted: Hydrostatic [ ] **Pneumatic** [ ] **Nominal Operating Pressure** [X] **None** [ ]

Test Pressure: 212/150 Psig **Test Temperature:** 46/44° F

Component Design Pressure: 309 Psig **Temperature:** 150° F

9. Remarks: None

CERTIFICATE OF COMPLIANCE

We certify that the statements made in this Owner's Report are correct and this replacement *conforms to the rules of the ASME Code, Section XI.*

Type Code Symbol Stamp: Not Applicable

Certificate Of Authorization No.: Not Applicable

Expiration Date: Not Applicable

Prepared By Kuldip Singh - Program Lead Engineer (PLE) **Signed By** Kuldip Singh - Program Lead Engineer (PLE)

Date 12/11/03 **Date** 12/11/03

CERTIFICATE OF INSERVICE INSPECTION

I, the undersigned, holding a valid commission issued by the National Board of Boiler and Pressure Vessel Inspectors and the State of Washington *and employed by* Hartford Steam Boiler Of Connecticut of Hartford, Connecticut *have inspected the components described in this Owner's Report during the period* 10/14/03 *to* 12/18/03 *and state to the best of my knowledge and belief, the Owner has performed examinations and taken corrective measures described in this Owner's Report in accordance with the requirements of the ASME Code, Section XI.*

By signing this certificate neither the Inspector nor his employer makes any warranty, expressed or implied, concerning the examinations and corrective measures described in this Owner's Report. Furthermore, neither the Inspector nor his employer shall be liable in any manner for any personal injury or property damage or a loss of any kind arising from or connected with this inspection.

Inspector's Signature **Commissions** 7185W/7185 NI WS
National Board, State, and Endorsements

Date 12/18/03

PLAN No 2-1881

ENERGY NORTHWEST
People·Vision·Solutions

FORM NIS-2 OWNER'S REPORT FOR REPAIRS OR REPLACEMENTS
As Required By The Provisions Of The ASME Code Section XI

1. Owner: Energy Northwest
Address: Columbia Generating Station, North Power Plant Loop, Richland, Washington, 99352
2. Plant: Columbia Generating Station
Address: Columbia Generating Station, North Power Plant Loop, Richland, Washington, 99352

Date: 12/11/03
Sheet: 1 Of 1
Unit: Not Applicable

3. (a) Work Performed By: Energy Northwest
(b) Repair Organization P.O. No, Job No, etc.: Energy Northwest
(c) Type Code Symbol Stamp: Not Applicable
(d) Certificate Of Authorization No.: Not Applicable
(e) Expiration Date: Not Applicable
4. Identification Of System: Service Water (SW) System
5. (a) Applicable Construction Code: ASME Section III, Code Class 3, 1971 Edition with Winter 1973 Addenda, Code Case: None
(b) Applicable Edition Of ASME Section XI Utilized For Repairs Or Replacements: 1989 Edition with no Addenda, Code Case: None
6. Identification Of Components Repaired Or Replaced And Replacement Components

Name Of Component	Name Of Manufacturer	Manufacturer's Serial No	National Board No	Other I.D.	Year Built	Repaired, Replaced Or Replacement	ASME Code Stamped (Yes Or No) Code Class
SW(22)-2	WPPSS *	SW(22)-2-P1	N/A	N/A	1983	----------	Yes, Code Class 3

7. Description Of Work Performed: Fabricated replacement restricting orifice plate for SW-FE-2B. The work was performed as follows:

1) Cut the plate material to the required dimensions.
2) Fabricated/machined the restricting orifice plate to the final dimensions.
3) Final finished the restricting orifice plate surfaces.
4) Marked the required information on the restricting orifice plate handle (paddle).

NOTES -

1) * Company name changed from Washington Public Power Supply System (WPPSS) to Energy Northwest in 1999.
2) The fabricated replacement restricting orifice plate for SW-FE-2B was installed in accordance with ASME Section XI Plan No 2-1882.

PLAN No 2-1881

ENERGY NORTHWEST
People·Vision·Solutions

FORM NIS-2 OWNER'S REPORT FOR REPAIRS OR REPLACEMENTS (Back)

8 Tests Conducted: Hydrostatic [ ] *Pneumatic* [ ] *Nominal Operating Pressure* [ ] *None* [X]
Test Pressure: Psig *Test Temperature:* °F
Component Design Pressure: Psig *Temperature:* °F

9. Remarks: None

CERTIFICATE OF COMPLIANCE

We certify that the statements made in this Owner's Report are correct and this replacement *conforms to the rules of the ASME Code, Section XI.*
Type Code Symbol Stamp: Not Applicable
Certificate Of Authorization No.: Not Applicable
Expiration Date: Not Applicable

Prepared By Kuldip Singh - Program Lead Engineer (PLE) *Signed By* Kuldip Singh - Program Lead Engineer (PLE)

Date 12/11/03 *Date* 12/11/03

CERTIFICATE OF INSERVICE INSPECTION

I, the undersigned, holding a valid commission issued by the National Board of Boiler and Pressure Vessel Inspectors and the State of Washington *and employed by* Hartford Steam Boiler Of Connecticut of Hartford, Connecticut *have inspected the components described in this Owner's Report during the period* 10-14-03 *to* 12-18-03 *and state to the best of my knowledge and belief, the Owner has performed examinations and taken corrective measures described in this Owner's Report in accordance with the requirements of the ASME Code, Section XI.*
By signing this certificate neither the Inspector nor his employer makes any warranty, expressed or implied, concerning the examinations and corrective measures described in this Owner's Report. Furthermore, neither the Inspector nor his employer shall be liable in any manner for any personal injury or property damage or a loss of any kind arising from or connected with this inspection.

Inspector's Signature *Commissions* 7486 WI 7486 NB WS
National Board, State, and Endorsements

Date 12-18-03

PLAN No 2-1882

ENERGY NORTHWEST
People·Vision·Solutions

FORM NIS-2 OWNER'S REPORT FOR REPAIRS OR REPLACEMENTS
As Required By The Provisions Of The ASME Code Section XI

1. Owner: Energy Northwest
Address: Columbia Generating Station, North Power Plant Loop, Richland, Washington, 99352
2. Plant: Columbia Generating Station
Address: Columbia Generating Station, North Power Plant Loop, Richland, Washington, 99352

Date: 12/11/03
Sheet: 1 Of 1
Unit: Not Applicable

3. (a) Work Performed By: Energy Northwest
(b) Repair Organization P.O. No, Job No, etc.: Energy Northwest
(c) Type Code Symbol Stamp: Not Applicable
(d) Certificate Of Authorization No.: Not Applicable
(e) Expiration Date: Not Applicable
4. Identification Of System: Service Water (SW) System
5. (a) Applicable Construction Code: ASME Section III, Code Class 3, 1971 Edition with Winter 1973 Addenda, Code Case: None
(b) Applicable Edition Of ASME Section XI Utilized For Repairs Or Replacements: 1989 Edition with no Addenda, Code Case: N-416-1
6. Identification Of Components Repaired Or Replaced And Replacement Components

Name Of Component	Name Of Manufacturer	Manufacturer's Serial No	National Board No	Other I.D.	Year Built	Repaired, Replaced Or Replacement	ASME Code Stamped (Yes Or No) Code Class
SW(22)-2	WPPSS *	SW(22)-2-P1	N/A	N/A	1983	----------	Yes, Code Class 3

7. Description Of Work Performed: Replaced existing restricting orifice plate for SW-FE-2B. The replacement work was performed as follows:

1) Removed existing restricting orifice plate.
2) Installed replacement restricting orifice plate.
3) Installed replacement studs associated with restricting plate orifice bolted flanged joint.
4) Installed replacement nuts associated with restricting orifice plate bolted flanged joint.
5) Performed VT-2 visual examination during pressure test to confirm pressure boundary integrity of the joint. No evidence of leakage during the pressure test.

NOTES -

1) * Company name changed from Washington Public Power Supply System (WPPSS) to Energy Northwest in 1999.
2) The replacement restricting orifice plate for SW-FE-2B was previously fabricated in accordance with ASME Section XI Plan No 2-1881.

PLAN No 2-1882

ENERGY NORTHWEST
People·Vision·Solutions

FORM NIS-2 OWNER'S REPORT FOR REPAIRS OR REPLACEMENTS (Back)

8 Tests Conducted: Hydrostatic [ ] **Pneumatic** [ ] **Nominal Operating Pressure** [X] **None** [ ]

Test Pressure: 220/150 Psig **Test Temperature:** 62/62° F

Component Design Pressure: 309 Psig **Temperature:** 150° F

9. Remarks: None

CERTIFICATE OF COMPLIANCE

We certify that the statements made in this Owner's Report are correct and this replacement *conforms to the rules of the ASME Code, Section XI.*

Type Code Symbol Stamp: Not Applicable

Certificate Of Authorization No.: Not Applicable

Expiration Date: Not Applicable

Prepared By Kuldip Singh - Program Lead Engineer (PLE) **Signed By** Kuldip Singh - Program Lead Engineer (PLE)

Date 12/11/03 **Date** 12/11/03

CERTIFICATE OF INSERVICE INSPECTION

I, the undersigned, holding a valid commission issued by the National Board of Boiler and Pressure Vessel Inspectors and the State of Washington *and employed by* Hartford Steam Boiler Of Connecticut of Hartford, Connecticut *have inspected the components described in this Owner's Report during the period* 10-14-03 *to* 12-18-03 *and state to the best of my knowledge and belief, the Owner has performed examinations and taken corrective measures described in this Owner's Report in accordance with the requirements of the ASME Code, Section XI.*

By signing this certificate neither the Inspector nor his employer makes any warranty, expressed or implied, concerning the examinations and corrective measures described in this Owner's Report. Furthermore, neither the Inspector nor his employer shall be liable in any manner for any personal injury or property damage or a loss of any kind arising from or connected with this inspection.

Inspector's Signature **Commissions** 7488/17186 N.I NS
National Board, State, and Endorsements

Date 12-18-03

PLAN No 2-1883

ENERGY NORTHWEST
People·Vision·Solutions

FORM NIS-2 OWNER'S REPORT FOR REPAIRS OR REPLACEMENTS
As Required By The Provisions Of The ASME Code Section XI

Date: 12/17/04
Sheet: 1 Of 1
Unit: Not Applicable

1. Owner: Energy Northwest
Address: Columbia Generating Station, North Power Plant Loop, Richland, Washington, 99352
2. Plant: Columbia Generating Station
Address: Columbia Generating Station, North Power Plant Loop, Richland, Washington, 99352
3. (a) Work Performed By: Energy Northwest
(b) Repair Organization P.O. No, Job No, etc.: Energy Northwest
(c) Type Code Symbol Stamp: Not Applicable
(d) Certificate Of Authorization No.: Not Applicable
(e) Expiration Date: Not Applicable
4. Identification Of System: Residual Heat Removal (RHR) System
5. (a) Applicable Construction Code: ASME Section III, Code Class 2, 1974 Edition with Winter 1975 Addenda, Code Case: None
(b) Applicable Edition Of ASME Section XI Utilized For Repairs Or Replacements: 1989 Edition with no Addenda, Code Case: None
6. Identification Of Components Repaired Or Replaced And Replacement Components

Name Of Component	Name Of Manufacturer	Manufacturer's Serial No	National Board No	Other I.D.	Year Built	Repaired, Replaced Or Replacement	ASME Code Stamped (Yes Or No) Code Class
RHR-V-75A	Marotta	103	1239	N/A	1981	----------	Yes, Code Class 2
Poppet (disc)	Enertech/Marotta	022	N/A	N/A	N/A	Replaced	No, Code Class 2
Poppet (disc)	Enertech/Marotta	KHO-2071	N/A	N/A	2003	Replacement	Yes, Code Class 2

7. Description Of Work Performed: Replaced existing poppet (disc) for valve RHR-V-75A. The replacement work was performed as follows:

1) Disassembled valve to remove the existing poppet (disc).
1) Removed existing valve poppet (disc), Serial No 022.
2) Installed replacement valve poppet (disc), Serial No KHO-2071 in the valve.
3) Reassembled the valve.

NOTES -

1) Valve parts for Marotta valves are now being manufactured by Enertech.

PLAN No 2-1883

ENERGY NORTHWEST
People·Vision·Solutions

FORM NIS-2 OWNER'S REPORT FOR REPAIRS OR REPLACEMENTS (Back)

8 Tests Conducted: Hydrostatic [ ] *Pneumatic* [ ] *Nominal Operating Pressure* [ ] *None* [X]
Test Pressure: Psig *Test Temperature:* °F
Component Design Pressure: Psig *Temperature:* °F

9. Remarks (Applicable Manufacturer's Data Reports to be attached): See attached N-2 Code Data Report for the replacement poppet (disc), Serial No KHO-2071.

CERTIFICATE OF COMPLIANCE

We certify that the statements made in this Owner's Report are correct and this replacement *conforms to the rules of the ASME Code, Section XI.*
Type Code Symbol Stamp: Not Applicable
Certificate Of Authorization No.: Not Applicable
Expiration Date: Not Applicable

Prepared By Kuldip Singh *Signed By* Kuldip Singh
Kuldip Singh - Program Lead Engineer (PLE) Kuldip Singh - Program Lead Engineer (PLE)
Date 12/17/04 *Date* 12/17/04

CERTIFICATE OF INSERVICE INSPECTION

I, the undersigned, holding a valid commission issued by the National Board of Boiler and Pressure Vessel Inspectors and the State of _____ *and employed by* _____ _____ *have inspected the components described in this Owner's Report during the period* _____ *to* _____ *and state to the best of my knowledge and belief, the Owner has performed examinations and taken corrective measures described in this Owner's Report in accordance with the requirements of the ASME Code, Section XI.*
By signing this certificate neither the Inspector nor his employer makes any warranty, expressed or implied, concerning the examinations and corrective measures described in this Owner's Report. Furthermore, neither the Inspector nor his employer shall be liable in any manner for any personal injury or property damage or a loss of any kind arising from or connected with this inspection.

Not Required - Replacement 1" NPS And Smaller *Commissions* _____
Inspector's Signature National Board, State, and Endorsements
Date _____

PLAN No. 2-1883.

FORM N-2 N OR NPT CERTIFICATE HOLDERS' DATA REPORT FOR IDENTICAL NUCLEAR PARTS AND APPURTENANCES*

As Required by the Provisions of the ASME Code, Section III, Division 1

Not To Exceed One Day's Production

12/13/04

1. Manufactured and certified by Enertech, A Div. of Curtiss-Wright Flow Control Corp.; 2950 Birch St.; Brea, CA 92821 (name and address of certificate holder)
2. Manufactured for Energy Northwest; P.O. Box 968; Richland, WA 99352-0968 (name and address of purchaser)
3. Location of installation Columbia Generating Station; North Powerplant Loop; Richland, WA 99352 (name and address)
4. Type 188590-9902 (drawing no.) SA-182 F316 (mat'l. spec. no.) 75,000 PSI (tensile strength) N/A (CRN) 2003 (year built)
5. ASME Code, Section III: 1974 (edition) Winter 1975 (addenda) 2 (class) none (Code Case no.)
6. Fabricated in accordance with Const. Spec. (Div. 2 only) N/A (No.) Revision N/A Date N/A
7. Remarks: Qty. 2 Valve Poppet (Disc), P/N: 188590-9902, ENERTECH Project No.: 810026

   Due to size & configuation, poppets are identified (tagged) with material heat code /serial number (KHO-2071 and KHO-2072), heat number (70203) and material specification (SA182 F316).
8. Nom. thickness (in.) 0.900 Min. design thickness (in.) 0.239 Dia. ID (ft. & in.) 1.06" Length overall (ft. & in.) 2.53"
9. When applicable, Certificate Holders' data reports are attached for each item of this report:

Part or Appurtenance Serial Number	National Board No. In Numerical Order	Part or Appurtenance Serial Number	National Board Number In Numerical Order
(1) KHO-2071	N/A	(26)	
(2) KHO-2072	N/A	(27)	
(3)		(28)	
(4)		(29)	
(5)		(30)	
(6) POPPET (DISC), S/N KHO-2071		(31)	
(7)		(32)	
(8)		(33)	
(9)		(34)	
(10)		(35)	
(11)		(36)	
(12)		(37)	
(13)		(38)	
(14)		(39)	
(15)		(40)	
(16)		(41)	
(17)		(42)	
(18)		(43)	
(19)		(44)	
(20)		(45)	
(21)		(46)	
(22)		(47)	
(23)		(48)	
(24)		(49)	
(25)		(50)	

10. Design pressure 500 psi Temp. 480 °F. Hydro. test pressure N/A (when applicable) at temp. °F.

*Supplemental information in the form of lists, sketches, or drawings may be used provided (1) size is 8½ X 1, (2) information in items 2 and 3 on this data report is included on each sheet, (3) each sheet is numbered and the number of sheets is recorded at the top of this form.

(6/85)-1 This form (E00040) may be obtained from the Order Dept., ASME, 345 E. 47th St., New York, N.Y. 10017.

FORM N-2 (back)

Mfr. Serial No. KHO-2071 and KHO-2072

CERTIFICATE OF DESIGN

Design specifications certified by Slawomir Kowalski (when applicable) P. E. state NJ Reg. no. 210

Design report* certified by N/A (when applicable) P. E. state _____ Reg. no. _____

CERTIFICATE OF SHOP COMPLIANCE

We certify that the statements made in this report are correct and that this (these) 188590-9902 Poppet, Valve conform to the rules of construction of the ASME Code, Section III.

NPT Certificate of Authorization no. N-2827 Expires October 11, 2005

Date 8/29/03 Name Enertech, A Div. of Curtiss-Wright Flow Control Corp. (NPT Certificate Holder) Signed [signature] (authorized representative)

CERTIFICATE OF SHOP INSPECTION

I, the undersigned, holding a valid commission issued by the National Board of Boiler and Pressure Vessel Inspectors and the state or province of California and employed by HSB CT of Connecticut have inspected these items described in this data report on 8-29-03, and state that to the best of my knowledge and belief, the Certificate Holder has fabricated these parts or appurtenances in accordance with the ASME Code, Section III. Each part listed has been authorized for stamping on the date shown above.

By signing this certificate, neither the inspector nor his employer makes any warranty, expressed or implied, concerning the equipment described in this data report. Furthermore, neither the inspector nor his employer shall be liable in any manner for any personal injury or property damage or loss of any kind arising from or connected with this inspection.

Date 8-29-03 Signed [signature] (Authorized Inspector) Commissions CA 1494 (Nat'l. Bd. (incl. endorsements) state or prov. and no.)

SATISFACTORY X UNSATISFACTORY ____

L. Peters II 9/4/03

RECEIPT INSPECTOR / LEVEL / DATE

PLAN No 2-1889

ENERGY NORTHWEST
People·Vision·Solutions

FORM NIS-2 OWNER'S REPORT FOR REPAIRS OR REPLACEMENTS
As Required By The Provisions Of The ASME Code Section XI

Date: 08/14/04
Sheet: 1 Of 1
Unit: Not Applicable

1. **Owner:** Energy Northwest
   Address: Columbia Generating Station, North Power Plant Loop, Richland, Washington, 99352
2. **Plant:** Columbia Generating Station
   Address: Columbia Generating Station, North Power Plant Loop, Richland, Washington, 99352
3. **(a) Work Performed By:** Energy Northwest
   (b) Repair Organization P.O. No, Job No, etc.: Energy Northwest
   (c) Type Code Symbol Stamp: Not Applicable
   (d) Certificate Of Authorization No.: Not Applicable
   (e) Expiration Date: Not Applicable
4. **Identification Of System:** Control Room Chilled Water (CCH) System
5. **(a) Applicable Construction Code:** ASME Section III, Code Class 3, 1971 Edition with Winter 1973 Addenda, Code Case: None
   (b) Applicable Edition Of ASME Section XI Utilized For Repairs Or Replacements: 1989 Edition with no Addenda, Code Case: N-517-1
6. **Identification Of Components Repaired Or Replaced And Replacement Components**

Name Of Component	Name Of Manufacturer	Manufacturer's Serial No	National Board No	Other I.D.	Year Built	Repaired, Replaced Or Replacement	ASME Code Stamped (Yes Or No) Code Class
SW(21)-2	WPPSS *	SW(21)-2-P1	N/A	N/A	1983	----------	Yes, Code Class 3
CCH-RD-1A	BS&B	Lot No 87090001-1	N/A	N/A	1987	Replaced	No, Code Class 3
CCH-RD-1A	CDC	Serial No 8031165A	N/A	N/A	2004	Replacement	No, Code Class 3

7. **Description Of Work Performed:** Replaced rupture disc for CCH-RD-1A. The replacement work was performed as follows:
   1) Removed existing rupture disc, rupture disc holders, studs and nuts.
   2) Installed new rupture disc holders.
   3) Installed new rupture disc.
   4) Installed new slip on flange.
   5) Installed new studs.
   6) Installed new nuts.
   7) Performed VT-2 visual examination during pressure test to confirm pressure boundary integrity of the bolted joint. No evidence of leakage during the pressure test.

NOTES -

1) * Company name changed from Washington Public Power Supply System (WPPSS) to Energy Northwest (EN) in 1999.

PLAN No 2-1889

ENERGY NORTHWEST
People·Vision·Solutions

FORM NIS-2 OWNER'S REPORT FOR REPAIRS OR REPLACEMENTS (Back)

8 Tests Conducted: Hydrostatic [ ] **Pneumatic** [ ] **Nominal Operating Pressure** [X] **None** [ ]

Test Pressure: 34 Psig **Test Temperature:** 70° F

Component Design Pressure: 309 Psig **Temperature:** 150° F

9. Remarks: See attached NR-1 Code Data Report for the new replacement rupture disc.

CERTIFICATE OF COMPLIANCE

We certify that the statements made in this Owner's Report are correct and this replacement *conforms to the rules of the ASME Code, Section XI.*

Type Code Symbol Stamp: Not Applicable

Certificate Of Authorization No.: Not Applicable

Expiration Date: Not Applicable

Prepared By Kuldip Singh - Program Lead Engineer (PLE) **Signed By** Kuldip Singh - Program Lead Engineer (PLE)

Date 8/14/04 **Date** 8/14/04

CERTIFICATE OF INSERVICE INSPECTION

I, the undersigned, holding a valid commission issued by the National Board of Boiler and Pressure Vessel Inspectors and the State of Washington *and employed by* Hartford Steam Boiler Of Connecticut of Hartford, Connecticut *have inspected the components described in this Owner's Report during the period* 5-12-04 *to* 8/17/04 *and state to the best of my knowledge and belief, the Owner has performed examinations and taken corrective measures described in this Owner's Report in accordance with the requirements of the ASME Code, Section XI.*

By signing this certificate neither the Inspector nor his employer makes any warranty, expressed or implied, concerning the examinations and corrective measures described in this Owner's Report. Furthermore, neither the Inspector nor his employer shall be liable in any manner for any personal injury or property damage or a loss of any kind arising from or connected with this inspection.

M. M. Foster **Commissions** 7486 W / 7486 NI WI

Inspector's Signature National Board, State, and Endorsements

Date 8/17/04

PLAN NO. 2-188Q
CCH-RD-1A.
Philip Smith
8/14/04

FORM NR-1

MANUFACTURERS' DATA REPORT OF RUPTURE DISCS

As required by the provisions of the ASME Code Rules

1. Manufactured by. Continental Disc Corporation - Liberty, Mo. 64068.
   Name and address of Manufacture

IDENTIFICATION OF RUPTURE DISC

2. Manufacturer's Type or Style No. ULTRX Serial No. 8031165A
3. Disc Dimensional Characteristics:

   Inlet Size 3" Outlet Size 3" Relief Area 7.35 SQ. IN.
4. Material Specification 316 SS DISC, 316 SS RINGS
5. Manufacturer's Drawing No. N/A

AUTHORIZATION TEST RESULTS

6. Burst Pressure 100 (psig) Max. 99.5 (psig) Min.
7. Coincident Disc Temperature 72 F (F)
8. Fluid Used in Tests. Air.
9. Cyclic Test Results (if required). n/a.

CERTIFICATION

10. Place-of Test. Continental Disc Corporation. Date of Test 3/4/04

We certify the above data to be correct and that the requirements of the ASME Code rules have been met.

Signed. Continental Disc Corporation. By. Dean Dachenhausen Date 3/10/04
Dean Dachenhausen
Director of Quality Assurance

(12/80) This form (E00026) can be obtained from the Order Dept., ASME, 345 East 47th St., New York, N.Y. 10017

PLAN No 2-1890

ENERGY NORTHWEST
People·Vision·Solutions

FORM NIS-2 OWNER'S REPORT FOR REPAIRS OR REPLACEMENTS
As Required By The Provisions Of The ASME Code Section XI

1. Owner: Energy Northwest
Address: Columbia Generating Station, North Power Plant Loop, Richland, Washington, 99352
2. Plant: Columbia Generating Station
Address: Columbia Generating Station, North Power Plant Loop, Richland, Washington, 99352

Date: 06/10/05
Sheet: 1 Of 1
Unit: Not Applicable

3. (a) Work Performed By: Energy Northwest
(b) Repair Organization P.O. No, Job No, etc.: Energy Northwest
(c) Type Code Symbol Stamp: Not Applicable
(d) Certificate Of Authorization No.: Not Applicable
(e) Expiration Date: Not Applicable
4. Identification Of System: Reactor Pressure Vessel (RPV) N-1A Code Data Report And Appurtenances N-5 Code Data Report
5. (a) Applicable Construction Code: ASME Section III, Code Class 1, 1971 Edition with Summer 1973 Addenda, Code Case: None
(b) Applicable Edition Of ASME Section XI Utilized For Repairs Or Replacements: 1989 Edition with no Addenda, Code Case: None
6. Identification Of Components Repaired Or Replaced And Replacement Components

Name Of Component	Name Of Manufacturer	Manufacturer's Serial No	National Board No	Other I.D.	Year Built	Repaired, Replaced Or Replacement	ASME Code Stamped (Yes Or No) Code Class
RPV	CBI Nuclear	T45	8	N/A	1974	----------	Yes, Code Class 1
LPRM	General Electric	K8619	N/A	N/A	1994	Replaced	Yes, Code Class 1
LPRM	General Electric	05S93603	N/A	N/A	2005	Replacement	Yes, Code Class 1

7. Description Of Work Performed: Replaced existing Local Power Range Monitoring (LPRM) incore assembly. The replacement work was performed as follows:

1) Removed existing Local Power Range Monitoring (LPRM) incore assembly Serial No K8619 from the Reactor Pressure Vessel (RPV) Core Location No 16-17.
2) Installed replacement Local Power Range Monitoring (LPRM) incore assembly Serial No 05S93603 at the Reactor Pressure Vessel (RPV) Core Location No 16-17.

NOTES -

1) General Electric (GE) Reuter-Stokes.
2) ASME Section III, Code Class 1, 1971 Edition with Summer 1971 Addenda for the Reactor Pressure Vessel (RPV) as documented on N-1A Code Data Report for nuclear vessels. ASME Section III, Code Class 1, 1971 Edition with Summer 1973 Addenda for the appurtenances installed for the RPV as documented on N-5 Code Data Report for field installation of nuclear power plant components, components supports and appurtenances such as incore housing, CRD housing, etc.
3) ASME Section III, Code Class 1, 1971 Edition with Summer 1973 Addenda for the replacement Local Power Range Monitoring (LPRM) incore assembly Serial No 05S93603.

PLAN No 2-1890

ENERGY NORTHWEST
People·Vision·Solutions

FORM NIS-2 OWNER'S REPORT FOR REPAIRS OR REPLACEMENTS (Back)

8 Tests Conducted: Hydrostatic [ ] *Pneumatic* [ ] *Nominal Operating Pressure* [ ] *None* [X]
Test Pressure: Psig *Test Temperature:* °F
Component Design Pressure: Psig *Temperature:* °F

9. Remarks (Applicable Manufacturer's Data Reports to be attached): See attached N-2 Code Data Report for the replacement Local Power Range Monitoring (LPRM) incore assembly Serial No 05S93603.

CERTIFICATE OF COMPLIANCE

We certify that the statements made in this Owner's Report are correct and this replacement *conforms to the rules of the ASME Code, Section XI.*
Type Code Symbol Stamp: Not Applicable
Certificate Of Authorization No.: Not Applicable
Expiration Date: Not Applicable

Prepared By Kuldip Singh - Program Lead Engineer (PLE) *Signed By* Kuldip Singh - Program Lead Engineer (PLE)

Date 6/16/05 *Date* 6/16/05

CERTIFICATE OF INSERVICE INSPECTION

I, the undersigned, holding a valid commission issued by the National Board of Boiler and Pressure Vessel Inspectors and the State of Washington *and employed by* Hartford Steam Boiler Of Connecticut of Hartford, Connecticut *have inspected the components described in this Owner's Report during the period* 4/7/2005 *to* 6/21/2005 *and state to the best of my knowledge and belief, the Owner has performed examinations and taken corrective measures described in this Owner's Report in accordance with the requirements of the ASME Code, Section XI.*
By signing this certificate neither the Inspector nor his employer makes any warranty, expressed or implied, concerning the examinations and corrective measures described in this Owner's Report. Furthermore, neither the Inspector nor his employer shall be liable in any manner for any personal injury or property damage or a loss of any kind arising from or connected with this inspection.

Inspector's Signature *Commissions* NAT'L BD 10655 10655W A,B,N,I
National Board, State, and Endorsements

Date 6/21/2005

WORK ORDER NUMBER: 15382

PLAN NO. 2-1890

FORM N-2 CERTIFICATE HOLDERS' DATA REPORT FOR IDENTICAL NUCLEAR PARTS AND APPURTENANCES*

As Required by the Provisions of the ASME Code, Section III
Not to Exceed One Day's Production

6/5/05

1. Manufactured and certified by GE Reuter-Stokes, Inc., 8499 Darrow Road, Twinsburg, Ohio 44087
(name and address of NPT Certificate Holder)
2. Manufactured for Columbia Generating Station, Energy Northwest, Richland, Washington 99352
(name and address of Purchaser)
3. Location of installation Columbia Generating Station, Energy Northwest, Richland, Washington 99352
(name and address)
4. Type: RS-C6-1400-264 (drawing no.) N/A (mat'l spec. no.) N/A (tensile strength) N/A (CRN) 2005 (year built)
5. ASME Code, Section III, Division 1: 1971 (edition) Summer 1973 (addenda date) 1 (class) N/A (Code Case no.)
6. Fabricated in accordance with Const. Spec. (Div. 2 only) N/A (no.) Revision N/A Date N/A
7. Remarks: Certified Design Specification CDS-C-5049-05
Certified Design Report CDR-C-5042-10
On File at GE Reuter-Stokes, Inc.
8. Nom. thickness (in.) N/A Min. design thickness (in.) N/A Dia. ID (ft & in.) N/A Length overall (ft & in.) N/A
9. When applicable, Certificate Holders' Data Reports are attached for each item of this report:

Part or Appurtenance Serial Number	National Board No. in Numerical Order	Part or Appurtenance Serial Number	National Board No. in Numerical Order
(1) 05S93603	N/A	(26)	
(2)		(27)	
(3) CORE LOCATION 16-17		(28)	
(4)		(29)	
(5)		(30)	
(6)		(31)	
(7)		(32)	
(8)		(33)	
(9)		(34)	
(10)		(35)	
(11)		(36)	
(12)		(37)	
(13)		(38)	
(14)		(39)	
(15)		(40)	
(16)		(41)	
(17)		(42)	
(18)		(43)	
(19)		(44)	
(20)		(45)	
(21)		(46)	
(22)		(47)	
(23)		(48)	
(24)		(49)	
(25)		(50)	

10. Design pressure 1250 PSIG psi. Temp. Vessel 575°F. Seal 300°F. Hydro. test pressure 1875 PSIG (when applicable) at temp. 70 °F.

* Supplemental information in the form of lists, sketches, or drawings may be used provided (1) size is 8½ x 11, (2) information in items 2 and 3 on this Data Report is included on each sheet, (3) each sheet is numbered and the number of sheets is recorded at the top of this form.

This form (E00040) may be obtained from the Order Dept., ASME, 22 Law Drive, Box 2300, Fairfield, NJ 07007-2300.
Reprint (7/91)

WORK ORDER NUMBER: 15382

FORM N-2 (Back - Pg. 2 of 2)

Certificate Holder's Serial Nos. N/A through N/A

CERTIFICATION OF DESIGN

Design specifications certified by Bill A. Balazs (when applicable) P.E. State CA Reg. no. MF348

Design report* certified by Ahmed I. Sabet (when applicable) P.E. State NY Reg. no. 071638

CERTIFICATE OF COMPLIANCE

We certify that the statements made in this report are correct and that this (these) Assembly conforms to the rules of construction of the ASME Code, Section III, Division 1.

NPT Certificate of Authorization No. N-2703 Expires September 16, 2006

Date 3/29/05 Name GE Reuter-Stokes, Inc. (NPT Certificate Holder) Signed [signature] (authorized representative)

CERTIFICATE OF INSPECTION

I, the undersigned, holding a valid commission issued by the National Board of Boiler and Pressure Vessel Inspectors and the State or Province of OHIO and employed by H.S.B. CT of HARTFORD, CT have inspected these items described in this Data Report on 3-29-2005, and state that to the best of my knowledge and belief, the Certificate Holder has fabricated these parts or appurtenances in accordance with the ASME Code, Section III, Division 1. Each part listed has been authorized for stamping on the date shown above.

By signing this certificate, neither the inspector nor his employer makes any warranty, expressed or implied, concerning the equipment described in this Data Report. Furthermore, neither the inspector nor his employer shall be liable in any manner for any personal injury or property damage or loss of any kind arising from or connected with this inspection.

Date 3-29-2005 Signed Herbert Campbell (Authorized Inspector) Commissions NB9176 A,B,N Ohio [Nat'l Bd. (incl. endorsements) and state or prov. and no.]

PLAN No 2-1891

ENERGY NORTHWEST
People·Vision·Solutions

FORM NIS-2 OWNER'S REPORT FOR REPAIRS OR REPLACEMENTS
As Required By The Provisions Of The ASME Code Section XI

Date: 01/28/05
Sheet: 1 Of 1
Unit: Not Applicable

1. **Owner:** Energy Northwest
   Address: Columbia Generating Station, North Power Plant Loop, Richland, Washington, 99352
2. **Plant:** Columbia Generating Station
   Address: Columbia Generating Station, North Power Plant Loop, Richland, Washington, 99352
3. **(a) Work Performed By:** Energy Northwest
   (b) Repair Organization P.O. No, Job No, etc.: Energy Northwest
   (c) Type Code Symbol Stamp: Not Applicable
   (d) Certificate Of Authorization No.: Not Applicable
   (e) Expiration Date: Not Applicable
4. **Identification Of System:** Floor Drain Radioactive (FDR) System
5. **(a) Applicable Construction Code:** ASME Section III, Code Class 1, 1971 Edition with Winter 1973 Addenda, Code Case: None
   (b) Applicable Edition Of ASME Section XI Utilized For Repairs Or Replacements: 1989 Edition with no Addenda, Code Case: None
6. **Identification Of Components Repaired Or Replaced And Replacement Components**

Name Of Component	Name Of Manufacturer	Manufacturer's Serial No	National Board No	Other I.D.	Year Built	Repaired, Replaced Or Replacement	ASME Code Stamped (Yes Or No) Code Class
FDR-V-541	Borg Warner	22415	N/A	N/A	1977	Repaired	Yes, Code Class 1

7. **Description Of Work Performed:** Repaired valve FDR-V-541. The repair work was performed as follows:
   1) Cut valve body to bonnet seal weld.
   2) Prepped valve body cut surfaces.
   3) Performed liquid penetrant (PT) examination on the valve body prepped surfaces. Liquid penetrant (PT) examination results acceptable.
   4) Prepped valve bonnet cut surfaces.
   5) Performed liquid penetrant (PT) examination on the valve bonnet prepped surfaces. Liquid penetrant (PT) examination results acceptable.
   6) Reinstalled the valve bonnet.
   7) Made valve body to bonnet seal weld.
   8) Performed visual examination on the final seal weld. Visual examination results acceptable.
   9) Performed liquid penetrant (PT) examination on the final seal weld. Liquid penetrant (PT) examination results acceptable.
   10) Performed VT-2 visual examination during pressure test to confirm pressure boundary integrity of the joint. No evidence of leakage during the pressure test.

PLAN No 2-1891

ENERGY NORTHWEST
People·Vision·Solutions

FORM NIS-2 OWNER'S REPORT FOR REPAIRS OR REPLACEMENTS (Back)

8 Tests Conducted: Hydrostatic [ ] Pneumatic [ ] Nominal Operating Pressure [X] None [ ]

Test Pressure: 3.5 Psig — Test Temperature: 86.4° F

Component Design Pressure: 3600 Psig — Temperature: 100° F

9. Remarks (Applicable Manufacturer's Data Reports to be attached): None

CERTIFICATE OF COMPLIANCE

We certify that the statements made in this Owner's Report are correct and this repair conforms to the rules of the ASME Code, Section XI.

Type Code Symbol Stamp: Not Applicable

Certificate Of Authorization No.: Not Applicable

Expiration Date: Not Applicable

Prepared By Kuldip Singh — Kuldip Singh - Program Lead Engineer (PLE)

Signed By Kuldip Singh — Kuldip Singh - Program Lead Engineer (PLE)

Date 1/28/05 — Date 1/28/05

CERTIFICATE OF INSERVICE INSPECTION

I, the undersigned, holding a valid commission issued by the National Board of Boiler and Pressure Vessel Inspectors and the State of Washington and employed by Hartford Steam Boiler Of Connecticut of Hartford, Connecticut have inspected the components described in this Owner's Report during the period 5-10-04 to 2-3-05 and state to the best of my knowledge and belief, the Owner has performed examinations and taken corrective measures described in this Owner's Report in accordance with the requirements of the ASME Code, Section XI.

By signing this certificate neither the Inspector nor his employer makes any warranty, expressed or implied, concerning the examinations and corrective measures described in this Owner's Report. Furthermore, neither the Inspector nor his employer shall be liable in any manner for any personal injury or property damage or a loss of any kind arising from or connected with this inspection.

Inspector's Signature — Commissions 14864 NI WS (National Board, State, and Endorsements)

Date 1-3-05

PLAN No 2-1892

ENERGY NORTHWEST
People·Vision·Solutions

FORM NIS-2 OWNER'S REPORT FOR REPAIRS OR REPLACEMENTS
As Required By The Provisions Of The ASME Code Section XI

Date: 05/17/04
Sheet: 1 Of 1
Unit: Not Applicable

1. Owner: Energy Northwest
Address: Columbia Generating Station, North Power Plant Loop, Richland, Washington, 99352
2. Plant: Columbia Generating Station
Address: Columbia Generating Station, North Power Plant Loop, Richland, Washington, 99352
3. (a) Work Performed By: Energy Northwest
(b) Repair Organization P.O. No, Job No, etc.: Energy Northwest
(c) Type Code Symbol Stamp: Not Applicable
(d) Certificate Of Authorization No.: Not Applicable
(e) Expiration Date: Not Applicable
4. Identification Of System: Reactor Recirculation Cooling (RRC) System
5. (a) Applicable Construction Code: ASME Section III, Code Class 1, 1971 Edition with Winter 1973 Addenda, Code Case: None
(b) Applicable Edition Of ASME Section XI Utilized For Repairs Or Replacements: 1989 Edition with no Addenda, Code Case: None
6. Identification Of Components Repaired Or Replaced And Replacement Components

Name Of Component	Name Of Manufacturer	Manufacturer's Serial No	National Board No	Other I.D.	Year Built	Repaired, Replaced Or Replacement	ASME Code Stamped (Yes Or No) Code Class
RRC(51)-4	WPPSS *	RRC(51)-4-P1	N/A	N/A	1983	----------	Yes, Code Class 1

7. Description Of Work Performed: Replaced existing studs and nuts for bolted piping flanged joints associated with valve RRC-V-20. The replacement work was performed as follows:

1) Removed existing studs for the bolted piping flanged joints.
2) Removed existing nuts for the bolted piping flanged joints.
3) Installed new studs for the bolted piping flanged joints.
4) Installed new nuts for the bolted piping flanged joints.

NOTES -

1) * Company name changed from Washington Public Power Supply System (WPPSS) to Energy Northwest (EN) in 1999.

PLAN No 2-1892

ENERGY NORTHWEST
People·Vision·Solutions

FORM NIS-2 OWNER'S REPORT FOR REPAIRS OR REPLACEMENTS (Back)

8 Tests Conducted: Hydrostatic [ ] Pneumatic [ ] Nominal Operating Pressure [ ] None [X]
Test Pressure: Psig Test Temperature: °F
Component Design Pressure: Psig Temperature: °F

9. Remarks: None

CERTIFICATE OF COMPLIANCE

We certify that the statements made in this Owner's Report are correct and this replacement conforms to the rules of the ASME Code, Section XI.
Type Code Symbol Stamp: Not Applicable
Certificate Of Authorization No.: Not Applicable
Expiration Date: Not Applicable

Prepared By Kuldip Singh - Program Lead Engineer (PLE) Signed By Kuldip Singh - Program Lead Engineer (PLE)

Date 5/17/04 Date 5/17/04

CERTIFICATE OF INSERVICE INSPECTION

I, the undersigned, holding a valid commission issued by the National Board of Boiler and Pressure Vessel Inspectors and the State of _____ and employed by _____ have inspected the components described in this Owner's Report during the period _____ to _____ and state to the best of my knowledge and belief, the Owner has performed examinations and taken corrective measures described in this Owner's Report in accordance with the requirements of the ASME Code, Section XI.
By signing this certificate neither the Inspector nor his employer makes any warranty, expressed or implied, concerning the examinations and corrective measures described in this Owner's Report. Furthermore, neither the Inspector nor his employer shall be liable in any manner for any personal injury or property damage or a loss of any kind arising from or connected with this inspection.

Not Required - Replacement 1" NPS And Smaller Commissions _____
Inspector's Signature National Board, State, and Endorsements

Date _____

PLAN No 2-1893

ENERGY NORTHWEST
People·Vision·Solutions

FORM NIS-2 OWNER'S REPORT FOR REPAIRS OR REPLACEMENTS
As Required By The Provisions Of The ASME Code Section XI

Date: 01/28/05
Sheet: 1 Of 1
Unit: Not Applicable

1. **Owner:** Energy Northwest
   Address: Columbia Generating Station, North Power Plant Loop, Richland, Washington, 99352
2. **Plant:** Columbia Generating Station
   Address: Columbia Generating Station, North Power Plant Loop, Richland, Washington, 99352
3. **(a) Work Performed By:** Energy Northwest
   (b) Repair Organization P.O. No, Job No, etc.: Energy Northwest
   (c) Type Code Symbol Stamp: Not Applicable
   (d) Certificate Of Authorization No.: Not Applicable
   (e) Expiration Date: Not Applicable
4. **Identification Of System:** Fuel Pool Cooling (FPC) System
5. **(a) Applicable Construction Code:** ASME Section III, Code Class 3, 1974 Edition with Winter 1974 Addenda, Code Case: None
   (b) Applicable Edition Of ASME Section XI Utilized For Repairs Or Replacements: 1989 Edition with no Addenda, Code Case: None
6. **Identification Of Components Repaired Or Replaced And Replacement Components**

Name Of Component	Name Of Manufacturer	Manufacturer's Serial No	National Board No	Other I.D.	Year Built	Repaired, Replaced Or Replacement	ASME Code Stamped (Yes Or No) Code Class
FPC-RV-21A	Lonergan	509258-97-1	N/A	N/A	1982	----------	Yes, Code Class3
Disc	Lonergan	N/A	N/A	N/A	N/A	Replaced	No, Code Class 3
Disc	Lonergan	N/A	N/A	N/A	N/A	Replacement	No, Code Class 3
Nozzle	Lonergan	N/A	N/A	N/A	N/A	Replaced	No, Code Class 3
Nozzle	Lonergan	N/A	N/A	N/A	N/A	Replacement	No, Code Class 3

7. **Description Of Work Performed:** Replaced parts for relief valve FPC-RV-21A. The replacement work was performed as follows:
   1) Removed existing disc from the valve.
   2) Installed replacement disc in the valve.
   3) Removed existing nozzle from the valve.
   4) Installed replacement nozzle in the valve.
   5) Performed VT-3 visual examination on the existing nuts for the relief valve body to bonnet joint. VT-3 visual examination results acceptable.
   6) Performed VT-3 visual examination on the existing studs for the relief valve body to bonnet joint. VT-3 visual examination results acceptable.
   7) Reassembled the relief valve.
   8) Performed VT-2 visual examination during pressure test to confirm pressure boundary integrity of the relief valve body to bonnet joint. No evidence of leakage during the pressure test.

PLAN No 2-1893

ENERGY NORTHWEST
People·Vision·Solutions

FORM NIS-2 OWNER'S REPORT FOR REPAIRS OR REPLACEMENTS (Back)

8 Tests Conducted: Hydrostatic [ ] Pneumatic [ ] Nominal Operating Pressure [ ] Other [•]

Test Pressure: 38 Psig **Test Temperature:** 75° F

Component Design Pressure: 145Psig** **Temperature:** 450° F**

9. Remarks (Applicable Manufacturer's Data Reports to be attached): 1) * Backpressure test on relief valve FPC-RV-21A body to bonnet bolted joint. 2) ** The component design pressure of 145 Psig and design temperature of 450° F is for the relief valve set pressure and rated temperature.

CERTIFICATE OF COMPLIANCE

We certify that the statements made in this Owner's Report are correct and this replacement *conforms to the rules of the ASME Code, Section XI.*

Type Code Symbol Stamp: Not Applicable

Certificate Of Authorization No.: Not Applicable

Expiration Date: Not Applicable

Prepared By Kuldip Singh - Program Lead Engineer (PLE) **Signed By** Kuldip Singh - Program Lead Engineer (PLE)

Date 1/28/05 **Date** 1/28/05

CERTIFICATE OF INSERVICE INSPECTION

I, the undersigned, holding a valid commission issued by the National Board of Boiler and Pressure Vessel Inspectors and the State of Washington *and employed by* Hartford Steam Boiler Of Connecticut of Hartford, Connecticut *have inspected the components described in this Owner's Report during the period* 5-14-04 *to* 2-3-05 *and state to the best of my knowledge and belief, the Owner has performed examinations and taken corrective measures described in this Owner's Report in accordance with the requirements of the ASME Code, Section XI.*

By signing this certificate neither the Inspector nor his employer makes any warranty, expressed or implied, concerning the examinations and corrective measures described in this Owner's Report. Furthermore, neither the Inspector nor his employer shall be liable in any manner for any personal injury or property damage or a loss of any kind arising from or connected with this inspection.

Inspector's Signature **Commissions** 7486 W IW NB

National Board, State, and Endorsements

Date 2-3-05

PLAN No 2-1894

ENERGY NORTHWEST
People·Vision·Solutions

FORM NIS-2 OWNER'S REPORT FOR REPAIRS OR REPLACEMENTS
As Required By The Provisions Of The ASME Code Section XI

Date: 10/15/04
Sheet: 1 Of 1
Unit: Not Applicable

1. **Owner:** Energy Northwest
   Address: Columbia Generating Station, North Power Plant Loop, Richland, Washington, 99352
2. **Plant:** Columbia Generating Station
   Address: Columbia Generating Station, North Power Plant Loop, Richland, Washington, 99352
3. **(a) Work Performed By:** Energy Northwest
   (b) Repair Organization P.O. No, Job No, etc.: Energy Northwest
   (c) Type Code Symbol Stamp: Not Applicable
   (d) Certificate Of Authorization No.: Not Applicable
   (e) Expiration Date: Not Applicable
4. **Identification Of System:** Process Instrumentation (PI) System
5. **(a) Applicable Construction Code:** ASME Section III, Code Class 3, 1974 Edition with Winter 1975 Addenda, Code Case: None
   (b) Applicable Edition Of ASME Section XI Utilized For Repairs Or Replacements: 1989 Edition with no Addenda, Code Case: None
6. **Identification Of Components Repaired Or Replaced And Replacement Components**

Name Of Component	Name Of Manufacturer	Manufacturer's Serial No	National Board No	Other I.D.	Year Built	Repaired, Replaced Or Replacement	ASME Code Stamped (Yes Or No) Code Class
PI(1)-ST-IR-69-7 D-220-031.0-IR-69	JCI	PI(1)-ST-IR-69-7 D-220-031.0-IR-69	N/A	N/A	1983	----------	Yes, Code Class 3

7. **Description Of Work Performed:** Replaced existing U bolt. The replacement work was performed as follows:
   1) Removed existing U bolt.
   2) Installed replacement U bolt, nuts and jam nuts (1/2 nuts).

PLAN No 2-1894

ENERGY NORTHWEST
People·Vision·Solutions

FORM NIS-2 OWNER'S REPORT FOR REPAIRS OR REPLACEMENTS (Back)

8 Tests Conducted: Hydrostatic [ ] Pneumatic [ ] Nominal Operating Pressure [ ] None [X]
Test Pressure: Psig Test Temperature: °F
Component Design Pressure: Psig Temperature: °F

9. Remarks (Applicable Manufacturer's Data Reports to be attached): None

CERTIFICATE OF COMPLIANCE

We certify that the statements made in this Owner's Report are correct and this replacement conforms to the rules of the ASME Code, Section XI.
Type Code Symbol Stamp: Not Applicable
Certificate Of Authorization No.: Not Applicable
Expiration Date: Not Applicable

Prepared By Kuldip Singh - Program Lead Engineer (PLE) Signed By Kuldip Singh - Program Lead Engineer (PLE)

Date 10/15/04 Date 10/15/04

CERTIFICATE OF INSERVICE INSPECTION

I, the undersigned, holding a valid commission issued by the National Board of Boiler and Pressure Vessel Inspectors and the State of _____ and employed by _____ have inspected the components described in this Owner's Report during the period _____ to _____ and state to the best of my knowledge and belief, the Owner has performed examinations and taken corrective measures described in this Owner's Report in accordance with the requirements of the ASME Code, Section XI.
By signing this certificate neither the Inspector nor his employer makes any warranty, expressed or implied, concerning the examinations and corrective measures described in this Owner's Report. Furthermore, neither the Inspector nor his employer shall be liable in any manner for any personal injury or property damage or a loss of any kind arising from or connected with this inspection.

Not Required - Replacement 1" NPS And Smaller Commissions _____
Inspector's Signature National Board, State, and Endorsements

Date _____

PLAN No 2-1895

ENERGY NORTHWEST
People·Vision·Solutions

FORM NIS-2 OWNER'S REPORT FOR REPAIRS OR REPLACEMENTS
As Required By The Provisions Of The ASME Code Section XI

Date: 11/06/04
Sheet: 1 Of 1
Unit: Not Applicable

1. **Owner:** Energy Northwest
   Address: Columbia Generating Station, North Power Plant Loop, Richland, Washington, 99352
2. **Plant:** Columbia Generating Station
   Address: Columbia Generating Station, North Power Plant Loop, Richland, Washington, 99352
3. **(a) Work Performed By:** Energy Northwest
   (b) Repair Organization P.O. No, Job No, etc.: Energy Northwest
   (c) Type Code Symbol Stamp: Not Applicable
   (d) Certificate Of Authorization No.: Not Applicable
   (e) Expiration Date: Not Applicable
4. **Identification Of System:** Standby Liquid Control (SLC) System
5. **(a) Applicable Construction Code:** ASME Section III, Code Class 2, 1971 Edition with Winter 1973 Addenda, Code Case: None
   (b) Applicable Edition Of ASME Section XI Utilized For Repairs Or Replacements: 1989 Edition with no Addenda, Code Case: None
6. **Identification Of Components Repaired Or Replaced And Replacement Components**

Name Of Component	Name Of Manufacturer	Manufacturer's Serial No	National Board No	Other I.D.	Year Built	Repaired, Replaced Or Replacement	ASME Code Stamped (Yes Or No) Code Class
SLC(2)-3S	WPPSS *	SLC(2)-3S-P1	N/A	N/A	1983	----------	Yes, Code Class 2
SLC(1)-1S	WPPSS *	SLC(1)-1S-P1	N/A	N/A	1982	----------	Yes, Code Class 2
SLC-RV-29A	Lonergan	137180-1-1	N/A	N/A	1994	Replaced	Yes, Code Class 2
SLC-RV-29A	Lonergan	509258-82-1	N/A	N/A	1978	Replacement	Yes, Code Class 2

7. **Description Of Work Performed:** Replaced existing relief valve SLC-RV-29A. The replacement work was performed as follows:
   1) Removed existing relief valve SLC-RV29A, Serial No 137180-1-1.
   2) Performed VT-3 visual examination on the existing studs for the relief valve outlet joint. VT-3 visual examination results acceptable.
   3) Performed VT-3 visual examination on the existing nuts for the relief valve outlet joint. VT-3 visual examination results acceptable.
   4) Installed replacement relief valve SLC-RV-29A, Serial No 509258-82-1.
   5) Performed VT-2 visual examination during pressure test to confirm pressure boundary integrity of the relief valve outlet joint. No evidence of leakage during the pressure test.

NOTES -

1) * Company name changed from Washington Public Power Supply System (WPPSS) to Energy Northwest in 1999.
2) The existing ASME Code Stamped piping system in which the replacement valve SLC-RV-29A, Serial No 509258-82-1 was installed is Standby Liquid Control (SLC) piping system SLC(2)-3S-P1 (For inlet). This piping system is certified to comply with ASME Section III, Code Class 2, 1971 Edition with Winter 1973 Addenda requirements.
3) The existing ASME Code Stamped piping system in which the replacement valve SLC-RV-29A, Serial No 509258-82-1 was installed is Standby Liquid Control (SLC) piping system SLC(1)-1S-P1 (For outlet). This piping system is certified to comply with ASME Section III, Code Class 2, 1971 Edition with Winter 1973 Addenda requirements.
4) The replacement valve SLC-RV-29A, Serial No 509258-82-1 is certified to comply with ASME Section III, Code Class 2, 1974 Edition with Winter 1974 Addenda requirements.

PLAN No 2-1895

ENERGY NORTHWEST
People·Vision·Solutions

FORM NIS-2 OWNER'S REPORT FOR REPAIRS OR REPLACEMENTS (Back)

8 Tests Conducted: Hydrostatic [ ] *Pneumatic* [ ] *Nominal Operating Pressure* [X] *Other* [ ]

Test Pressure: Static Head *Test Temperature:* 82° F

Component Design Pressure: 1400 Psig *Temperature:* 200° F

9. Remarks (Applicable Manufacturer's Data Reports to be attached): See attached NV-1 Code Data Report for the replacement valve SLC-RV-29A, Serial No 509258-82-1.
2) Component design pressure of 1400 Psig is relief valve set pressure and design temperature of 200° F is relief valve rated temperature.

CERTIFICATE OF COMPLIANCE

We certify that the statements made in this Owner's Report are correct and this replacement *conforms to the rules of the ASME Code, Section XI.*
Type Code Symbol Stamp: Not Applicable
Certificate Of Authorization No.: Not Applicable
Expiration Date: Not Applicable

Prepared By Kuldip Singh - Program Lead Engineer (PLE) *Signed By* Kuldip Singh - Program Lead Engineer (PLE)

Date 11/6/04 *Date* 11/6/04

CERTIFICATE OF INSERVICE INSPECTION

I, the undersigned, holding a valid commission issued by the National Board of Boiler and Pressure Vessel Inspectors and the State of Washington *and employed by* Hartford Steam Boiler Of Connecticut of Hartford, Connecticut *have inspected the components described in this Owner's Report during the period* 6/15/04 *to* 11/10/04 *and state to the best of my knowledge and belief, the Owner has performed examinations and taken corrective measures described in this Owner's Report in accordance with the requirements of the ASME Code, Section XI.*
By signing this certificate neither the Inspector nor his employer makes any warranty, expressed or implied, concerning the examinations and corrective measures described in this Owner's Report. Furthermore, neither the Inspector nor his employer shall be liable in any manner for any personal injury or property damage or a loss of any kind arising from or connected with this inspection.

Inspector's Signature *Commissions* 7486 W N I NS
National Board, State, and Endorsements

Date 11/10/04

FORM NV-1 FOR SAFETY AND SAFETY RELIEF VALVES*

As required by the Provisions of the ASME Code Rules PLAN No. 2-1895

1. Manufactured by J. E. Lonergan Company, Red Lion Rd., W. of Verree, Philadelphia, Pa. 19115
Name and Address

SLC-RV-29A, S/N 509258-82-1

Model No. D-50D/S4 Order No. 509258 Contract Date 8/5/75 National Board No. Delaup Bugb 11/4/04

2. Manufactured For Bovee & Crail Const. Co. and General Energy Resources, Inc., Richland, Wash. Order No. 215-15190
Name and Address

3. Owner Washington Public Power, Hanford, Washington 99352
Name and Address

4. Location of Plant Hanford #2 Jobsite, 12 Miles North of Richland, Washington 99352

5. Valve Identification SLC-RV-29A Serial No. 509258-82-1 Drawing No. A-2346, No Rev.

Type Safety Relief Valve (Safety; Safety Relief; Pilot; Power Actuated) Orifice Size 0.110 Sq. Inch Pipe Size ____ Inch Inlet 1" Inch Outlet 2"

6. Set Pressure (PSIG) 1400 * 200 12-15-15 °F Rated Temp. 12/15/78

Stamped Capacity 67.2 G.P.M. MAXIMUM @ 10 % Overpressure Blowdown (PSIG) **

Hydrostatic Test (PSIG) Inlet 2100 Outlet Valve 425

7. The material, design, construction and workmanship comply with ASME Code, Section III, Winter Addenda

Class 2, Edition 1974, Addenda Date 12/31/74, Case No. 1555

BOVEE & CRAIL / G.E.R.I. Q.A./Q.C. APPROVED SIGN [signature] DATE 1-22-75 TAG # 34316

Pressure Containing or Pressure Retaining Components

	Serial No. or Identification	Material Specification Including Type or Grade
a. Castings		
Body	D371-1	ASME SA-351 (CF8M) Type 316
Bonnet & Yoke	E5369-1	ASME SA-351 (CF8M) Type 316
b. Bar Stock and Forgings		WBG BR. 215 15018
Support Rods		
Nozzle	02607	ASME SA-479 Type 316
Disc	G8864	ASME SA-479 Type 316
Spring Washers	02607	ASME SA-479 Type 316
Adjusting Screw	G9913	ASME SA-479 Type 316
Spindle	G9938	ASME SA-479 Type 316

*Supplemental sheets in form of lists, sketches or drawings may be used provided (1) size is 8½" x 11", (2) information in items 1-2 on this data report is included on each sheet, and (3) each sheet is numbered and number of sheets is recorded at top of this form.

2

2 1 2 1 0 0 4

	Serial No. or Identification	Material Specification Including Type or Grade
	Heat No.	
c. Spring	00653	ASTM A-313 Type 316
d. Bolting Studs	- Cert. of Conformance	ASME SA-320, GR.B8
Nuts	- Cert. of Conformance	ASME SA-194, GR. 8

e. Other Parts such as Pilot Components

Cap	02977	ASME SA-479 Type 316

BOVE... IL / G.E.R.I.
Q.I. ...ROVED
SIGN: SNR
DATE: 12-22-78 ...

** Blowdown not specified by code.

We certify that the statements made in this report are correct.

Date 12-15 19 78 Signed J. E. LONERGAN CO. (Manufacturer) By T. A. NICKEY

Certificate of Authorization No. N-1443 expires Aug. 9, 1979.

CERTIFICATE OF SHOP INSPECTION

I, the undersigned, holding a valid commission issued by the National Board of Boiler and Pressure Vessel Inspectors and the State or Province of Penna. and employed by Hartford Stm. Boiler I.&I. Co. of Hartford, Conn. have inspected the equipment described in this Data Report on Dec 15 19 78 and state that to the best of my knowledge and belief, the Manufacturer has constructed this equipment in accordance with the applicable Subsections of ASME Section III.

By signing this certificate, neither the Inspector nor his employer makes any warranty, expressed or implied, concerning the equipment described in this Data Report. Furthermore, neither the Inspector nor his employer shall be liable in any manner for any personal injury or property damage or a loss of any kind arising from or connected with this inspection.

Date Dec 15 19 78 WBG BR 215 15018

Walter J. Comerford (Inspector) Commission Pa 1786 (National Board, State, Province and No.)

2 1279 1005

PLAN No 2-1896

ENERGY NORTHWEST
People·Vision·Solutions

FORM NIS-2 OWNER'S REPORT FOR REPAIRS OR REPLACEMENTS
As Required By The Provisions Of The ASME Code Section XI

Date: 11/06/04
Sheet: 1 Of 1
Unit: Not Applicable

1. **Owner:** Energy Northwest
   Address: Columbia Generating Station, North Power Plant Loop, Richland, Washington, 99352
2. **Plant:** Columbia Generating Station
   Address: Columbia Generating Station, North Power Plant Loop, Richland, Washington, 99352
3. **(a) Work Performed By:** Energy Northwest
   (b) Repair Organization P.O. No, Job No, etc.: Energy Northwest
   (c) Type Code Symbol Stamp: Not Applicable
   (d) Certificate Of Authorization No.: Not Applicable
   (e) Expiration Date: Not Applicable
4. **Identification Of System:** Standby Liquid Control (SLC) System
5. **(a) Applicable Construction Code:** ASME Section III, Code Class 2, 1971 Edition with Winter 1973 Addenda, Code Case: None
   (b) Applicable Edition Of ASME Section XI Utilized For Repairs Or Replacements: 1989 Edition with no Addenda, Code Case: None
6. **Identification Of Components Repaired Or Replaced And Replacement Components**

Name Of Component	Name Of Manufacturer	Manufacturer's Serial No	National Board No	Other I.D.	Year Built	Repaired, Replaced Or Replacement	ASME Code Stamped (Yes Or No) Code Class
SLC(2)-3S	WPPSS *	SLC(2)-3S-P1	N/A	N/A	1983	----------	Yes, Code Class 2
SLC(1)-1S	WPPSS *	SLC(1)-1S-P1	N/A	N/A	1982	----------	Yes, Code Class 2
SLC-RV-29B	Lonergan	137180-1-2	N/A	N/A	1994	Replaced	Yes, Code Class 2
SLC-RV-29B	Lonergan	139407-1-2	N/A	N/A	1994	Replacement	Yes, Code Class 2

7. **Description Of Work Performed:** Replaced existing relief valve SLC-RV-29B. The replacement work was performed as follows:
   1) Removed existing relief valve SLC-RV29B, Serial No 137180-1-2.
   2) Performed VT-3 visual examination on the existing studs for the relief valve outlet joint. VT-3 visual examination results acceptable.
   3) Performed VT-3 visual examination on the existing nuts for the relief valve outlet joint. VT-3 visual examination results acceptable.
   4) Installed replacement relief valve SLC-RV-29B, Serial No139407-1-2.
   5) Performed VT-2 visual examination during pressure test to confirm pressure boundary integrity of the relief valve outlet joint. No evidence of leakage during the pressure test.

NOTES -

1) * Company name changed from Washington Public Power Supply System (WPPSS) to Energy Northwest in 1999.
2) The existing ASME Code Stamped piping system in which the replacement valve SLC-RV-29B, Serial No 139407-1-2 was installed is Standby Liquid Control (SLC) piping system SLC(2)-3S-P1 (For inlet). This piping system is certified to comply with ASME Section III, Code Class 2, 1971 Edition with Winter 1973 Addenda requirements.
3) The existing ASME Code Stamped piping system in which the replacement valve SLC-RV-29B, Serial No 139407-1-2 was installed is Standby Liquid Control (SLC) piping system SLC(1)-1S-P1 (For outlet). This piping system is certified to comply with ASME Section III, Code Class 2, 1971 Edition with Winter 1973 Addenda requirements.
4) The replacement valve SLC-RV-29B, Serial No 139407-1-2 is certified to comply with ASME Section III, Code Class 2, 1974 Edition with Winter 1974 Addenda requirements.

PLAN No 2-1896

ENERGY NORTHWEST
People·Vision·Solutions

FORM NIS-2 OWNER'S REPORT FOR REPAIRS OR REPLACEMENTS (Back)

8 Tests Conducted: Hydrostatic [ ] **Pneumatic** [ ] **Nominal Operating Pressure** [X] **Other** [ ]

Test Pressure: Static Head **Test Temperature:** 82° F

Component Design Pressure: 1400 Psig **Temperature:** 200° F

9. Remarks (Applicable Manufacturer's Data Reports to be attached): See attached NV-1 Code Data Report for the replacement valve SLC-RV-29B, Serial No 139407-1-2.
2) Component design pressure of 1400 Psig is relief valve set pressure and design temperature of 200° F is relief valve rated temperature.

CERTIFICATE OF COMPLIANCE

We certify that the statements made in this Owner's Report are correct and this replacement *conforms to the rules of the ASME Code, Section XI.*
Type Code Symbol Stamp: Not Applicable
Certificate Of Authorization No.: Not Applicable
Expiration Date: Not Applicable

Prepared By Kuldip Singh - Program Lead Engineer (PLE) **Signed By** Kuldip Singh - Program Lead Engineer (PLE)

Date 11/6/04 **Date** 11/6/04

CERTIFICATE OF INSERVICE INSPECTION

I, the undersigned, holding a valid commission issued by the National Board of Boiler and Pressure Vessel Inspectors and the State of Washington *and employed by* Hartford Steam Boiler Of Connecticut of Hartford, Connecticut *have inspected the components described in this Owner's Report during the period* 6-25-04 *to* 11/10/04 *and state to the best of my knowledge and belief, the Owner has performed examinations and taken corrective measures described in this Owner's Report in accordance with the requirements of the ASME Code, Section XI.*
By signing this certificate neither the Inspector nor his employer makes any warranty, expressed or implied, concerning the examinations and corrective measures described in this Owner's Report. Furthermore, neither the Inspector nor his employer shall be liable in any manner for any personal injury or property damage or a loss of any kind arising from or connected with this inspection.

Inspector's Signature **Commissions** 7486W NI NS.
National Board, State, and Endorsements

Date 11-10-04

PLAN No. 2-1896.

FORM NV-1 CERTIFICATE HOLDERS' DATA REPORT FOR PRESSURE OR VACUUM RELIEF VALVES*

As Required by the Provisions of the ASME Code, Section III, Division 1

1. Manufactured and certified by Kunkle Industries, Inc. Lonergan Valve Division, 8222 Bluffton Road, Fort Wayne, IN 46809 (name and address of NV Certificate Holder)

2. Manufactured for Washington Public Power Supply System, Accts. Payable, MD 055, P.O. 968, Richland, WA 99352-09 (name and address of Purchaser)

3. Location of installation Washington Public Power Supply System, WNP-2 OPS WHS Complex, Whse. #1, North Power Plan Richland, WA 99352 (name and address)

4. Valve ND50DS421-DG1400 (model no., series no.) Orifice size .394 (in.) Nom. inlet size 1" (in.) Outlet size 2" (in.)

5. ASME Code, Section III, Division 1: 1974 (edition) Winter 1974 (addenda date) 2 (class) N/A (Code Case no.)

6. Type Spring (spring, pilot or power operated) 1400 (set pressure, psig) N/A (blowdown, psi) 100° F (rated temp.) 2100 (hydro. test, psig, inlet) at 33° min. °F

7. Identification 139407-1-1 through 139407-1-2 (Cert. Holder's serial no.) N/A (CRN) A940014 Rev. 0 (drawing no.) N/A (Nat'l. Bd. no.) 1994 (year built)

8. Control ring settings N/A

9. Pressure retaining items:

SLC-RV-29B, S/N 139407-1-2

11/4/04

	Serial No. or Identification	Mat'l. Spec., Including Type or Grade	Tensile Strength
Body	S6601-1, -2	SA-351 CF8M	70 ksi
Bonnet ~~XXXXX~~	T4795-5, -6	SA-351 CF8M	70 ksi
~~XXXXXXXXX~~ 3/8" Plug	18450 / 73028	SA-479 TY316	75 ksi
Nozzle	703685	SA-479 TY316	75 ksi
Disk	97477	SA-479 TY316	75 ksi
Spring~~XXXXXX~~ Step	31828	SA-479 TY316	75 ksi
~~XXXXXXXXXXXX~~ Cap	H8506-4, -12	SA-351 CF8M	70 ksi
~~XXXXX~~ Gag Plug Screw	30091	SA-479 TY316	75 ksi
Spring	20330	ASTM A-313 TY316	*
~~XXXXX~~ Ring Pin Screw	30091	SA-479 TY316	75 ksi
~~XXXXXXX~~ Stem	704631	SA-479 TY316	75 ksi

(Continued below)

10. Relieving capacity 63,500 (127 GPM) (steam or fluid, lb/hr) @ 10% (psi) overpressure as certified by the National Board 01/25/85 (date)

11. Remarks: * Spring exempt from material requirements of NC-2000 but meets design requirements of NC-3595.

9. Pressure Retaining Items: (Continued)

Compression Screw	700737	SA-479 TY316	75 ksi
Heavy Hex Nut	8079541/N4C	SA-194 GR 2H	N/A
Stud	8866612	SA-193 GR B7	125 ksi

CERTIFICATION OF DESIGN

Design Specification certified by D. Murphy P.E. State WA Reg. no. 12542

Design Report certified by N/A P.E. State N/A Reg. no. N/A

CERTIFICATE OF COMPLIANCE

We certify that the statements made in this report are correct and that this valve conforms to the rules for construction of the ASME Code, Section III, Division 1.

NV Certificate of Authorization No. N-2853 Expires November 18, 1994

Date 8-3-94 Name Kunkle Industries, Inc. Lonergan Valve Division (NV Certificate Holder) Signed Debra A. Wetzel (authorized representative)

* Supplemental information in form of lists, sketches, or drawings may be used provided (1) size is 8½ × 11, (2) information in items 1 through 4 on this Data Report is included on each sheet, (3) each sheet is numbered and the number of sheets is recorded at the top of this form.

(12/88) This form (E00042) may be obtained from the Order Dept., ASME, 22 Law Drive, Box 2300, Fairfield, NJ 07007-2300.

8/4/94

Certificate Holder's Serial No. 139407-1-1 thru 139407-1-2

CERTIFICATE OF INSPECTION

I, the undersigned, holding a valid commission issued by the National Board of Boiler and Pressure Vessel Inspectors and the State or Province of Michigan and employed by HSBI & I Co. of Hartford, CT have inspected the valve described in this Data Report on August 4, 1994, and state that to the best of my knowledge and belief, the Certificate Holder has constructed this valve in accordance with the ASME Code, Section III, Division 1.

By signing this certificate neither the inspector nor his employer makes any warranty, expressed or implied, concerning the component described in this Data Report. Furthermore, neither the inspector nor his employer shall be liable in any manner for any personal injury or property damage or a loss of any kind arising from or connected with this inspection.

Date 8-4-94 Signed [signature] (Authorized Inspector) Commissions NB7444 (NBIH), Ind 840 (Nat'l. Bd. (incl. endorsements) and state or prov. and no.)

PLAN No 2-1897

ENERGY NORTHWEST
People·Vision·Solutions

FORM NIS-2 OWNER'S REPORT FOR REPAIRS OR REPLACEMENTS
As Required By The Provisions Of The ASME Code Section XI

Date: 09/21/04
Sheet: 1 Of 1
Unit: Not Applicable

1. **Owner:** Energy Northwest
   Address: Columbia Generating Station, North Power Plant Loop, Richland, Washington, 99352
2. **Plant:** Columbia Generating Station
   Address: Columbia Generating Station, North Power Plant Loop, Richland, Washington, 99352
3. **(a) Work Performed By:** Energy Northwest
   (b) Repair Organization P.O. No, Job No, etc.: Energy Northwest
   (c) Type Code Symbol Stamp: Not Applicable
   (d) Certificate Of Authorization No.: Not Applicable
   (e) Expiration Date: Not Applicable
4. **Identification Of System:** Control Room Chilled Water (CCH) System
5. **(a) Applicable Construction Code:** ASME Section III, Code Class 3, 1971 Edition with Winter 1973 Addenda, Code Case: None
   (b) Applicable Edition Of ASME Section XI Utilized For Repairs Or Replacements: 1989 Edition with no Addenda, Code Case: N-517-1
6. **Identification Of Components Repaired Or Replaced And Replacement Components**

Name Of Component	Name Of Manufacturer	Manufacturer's Serial No	National Board No	Other I.D.	Year Built	Repaired, Replaced Or Replacement	ASME Code Stamped (Yes Or No) Code Class
SW(22)-2	WPPSS *	SW(22)-2-P1	N/A	N/A	1983	----------	Yes, Code Class 3
CCH-RD-1B	BS&B	Lot No 87090001-1	N/A	N/A	1987	Replaced	No, Code Class 3
CCH-RD-1B	CDC	Serial No 8031165A	N/A	N/A	2004	Replacement	No, Code Class 3

7. **Description Of Work Performed:** Replaced rupture disc for CCH-RD-1B. The replacement work was performed as follows:
   1) Removed existing rupture disc, rupture disc holders, studs and nuts.
   2) Installed new rupture disc holders.
   3) Installed new rupture disc.
   4) Installed new slip on flange.
   5) Installed new studs.
   6) Installed new nuts.
   7) Performed VT-2 visual examination during pressure test to confirm pressure boundary integrity of the bolted joint. No evidence of leakage during the pressure test.

NOTES -

1) * Company name changed from Washington Public Power Supply System (WPPSS) to Energy Northwest (EN) in 1999.

PLAN No 2-1897

ENERGY NORTHWEST
People · Vision · Solutions

FORM NIS-2 OWNER'S REPORT FOR REPAIRS OR REPLACEMENTS (Back)

8 Tests Conducted: Hydrostatic [ ] **Pneumatic** [ ] **Nominal Operating Pressure** [X] **None** [ ]

Test Pressure: 23 Psig **Test Temperature:** 60° F

Component Design Pressure: 309 Psig **Temperature:** 150° F

9. Remarks: See attached NR-1 Code Data Report for the new replacement rupture disc.

CERTIFICATE OF COMPLIANCE

We certify that the statements made in this Owner's Report are correct and this replacement ***conforms to the rules of the ASME Code, Section XI.***

Type Code Symbol Stamp: Not Applicable

Certificate Of Authorization No.: Not Applicable

Expiration Date: Not Applicable

Prepared By Kuldip Singh - Program Lead Engineer (PLE) ***Signed By*** Kuldip Singh - Program Lead Engineer (PLE)

Date 9/21/04 ***Date*** 9/21/04

CERTIFICATE OF INSERVICE INSPECTION

I, the undersigned, holding a valid commission issued by the National Board of Boiler and Pressure Vessel Inspectors and the State of Washington ***and employed by*** Hartford Steam Boiler Of Connecticut of Hartford, Connecticut ***have inspected the components described in this Owner's Report during the period*** 7-17-04 ***to*** 10-6-04 ***and state to the best of my knowledge and belief, the Owner has performed examinations and taken corrective measures described in this Owner's Report in accordance with the requirements of the ASME Code, Section XI.***

By signing this certificate neither the Inspector nor his employer makes any warranty, expressed or implied, concerning the examinations and corrective measures described in this Owner's Report. Furthermore, neither the Inspector nor his employer shall be liable in any manner for any personal injury or property damage or a loss of any kind arising from or connected with this inspection.

Inspector's Signature **Commissions** 74866 NI IS

National Board, State, and Endorsements

Date 10-6-04

PLAN No. 2-1897

CCH-RD-1B

Philip Sapp 8/14/04

FORM NR-1

MANUFACTURERS' DATA REPORT OF RUPTURE DISCS
As required by the provisions of the ASME Code Rules

1. Manufactured by. Continental Disc Corporation - Liberty, Mo. 64068 .
Name and address of Manufacture

IDENTIFICATION OF RUPTURE DISC

2. Manufacturer's Type or Style No. ULTRX Serial No. 8031165A

3. Disc Dimensional Characteristics:

Inlet Size 3" Outlet Size 3" Relief Area 7.35 SQ. IN.

4. Material Specification 316 SS DISC, 316 SS RINGS

5. Manufacturer's Drawing No. N/A

AUTHORIZATION TEST RESULTS

6. Burst Pressure 100 (psig) Max. 99.5 (psig) Min.

7. Coincident Disc Temperature 72 F (F)

8. Fluid Used in Tests. Air .

9. Cyclic Test Results (if required). n/a .

CERTIFICATION

10. Place-of Test. Continental Disc Corporation. Date of Test 3/4/04

We certify the above data to be correct and that the requirements of the ASME Code rules have been met.

Signed. Continental Disc Corporation . By. Dean Dachenhausen Date 3/10/04
Dean Dachenhausen
Director of Quality Assurance

(12/80) This form (E00026) can be obtained from the Order Dept., ASME, 345 East 47th St., New York, N.Y. 10017

PLAN No 2-1899

ENERGY NORTHWEST
People·Vision·Solutions

FORM NIS-2 OWNER'S REPORT FOR REPAIRS OR REPLACEMENTS
As Required By The Provisions Of The ASME Code Section XI

Date: 08/20/04
Sheet: 1 Of 1
Unit: Not Applicable

1. **Owner:** Energy Northwest
   Address: Columbia Generating Station, North Power Plant Loop, Richland, Washington, 99352
2. **Plant:** Columbia Generating Station
   Address: Columbia Generating Station, North Power Plant Loop, Richland, Washington, 99352
3. **(a) Work Performed By:** Energy Northwest
   (b) Repair Organization P.O. No, Job No, etc.: Energy Northwest
   (c) Type Code Symbol Stamp: Not Applicable
   (d) Certificate Of Authorization No.: Not Applicable
   (e) Expiration Date: Not Applicable
4. **Identification Of System:** Main Steam (MS) System
5. **(a) Applicable Construction Code:** ASME Section III, Code Class 1, 1971 Edition with Winter 1971 Addenda, Code Case: None
   (b) Applicable Edition Of ASME Section XI Utilized For Repairs Or Replacements: 1989 Edition with no Addenda, Code Case: None
6. **Identification Of Components Repaired Or Replaced And Replacement Components**

Name Of Component	Name Of Manufacturer	Manufacturer's Serial No	National Board No	Other I.D.	Year Built	Repaired, Replaced Or Replacement	ASME Code Stamped (Yes Or No) Code Class
MS-V-22D	Rockwell	JT-41	68	N/A	1973	----------	Yes, Code Class 1

7. **Description Of Work Performed:** Performed the following ASME related work on valve MS-V-22D, Serial No JT-41:
   1) Performed VT-3 visual examination on the exposed surfaces of the existing studs for the valve body to bonnet joint. VT-3 visual examination results acceptable.
   2) Performed VT-3 visual examination on the existing nuts for the valve body to bonnet joint. VT-3 visual examination results acceptable.
   3) Performed VT-2 visual examination during pressure test to confirm pressure boundary integrity of the joint. No evidence of leakage during the pressure test.

NOTES -

1) ASME Section XI Plan No 2-1899 was issued to replace pilot disc (stem disc), main disc (piston disc), studs and nuts for the valve body to bonnet joint for valve MS-V-22D, Serial No JT-41. None of the ASME pressure boundary (retaining) items were required to be replaced.
2) See ASME Section XI Plan No 2-1905 for additional; work performed on valve MS-V-22D, Serial No JT-41.

PLAN No 2-1899

ENERGY NORTHWEST
People·Vision·Solutions

FORM NIS-2 OWNER'S REPORT FOR REPAIRS OR REPLACEMENTS (Back)

8 Tests Conducted: Hydrostatic [ ] Pneumatic [ ] Nominal Operating Pressure [X] Other [ ]

Test Pressure: 931 Psig
Component Design Pressure: 1250 Psig
Test Temperature: 527.7° F
Temperature: 575° F

9. Remarks: None

CERTIFICATE OF COMPLIANCE

We certify that the statements made in this Owner's Report are correct and this replacement conforms to the rules of the ASME Code, Section XI.
Type Code Symbol Stamp: Not Applicable
Certificate Of Authorization No.: Not Applicable
Expiration Date: Not Applicable

Prepared By Kuldip Singh - Program Lead Engineer (PLE) Signed By Kuldip Singh - Program Lead Engineer (PLE)

Date 8/20/04 Date 8/20/04

CERTIFICATE OF INSERVICE INSPECTION

I, the undersigned, holding a valid commission issued by the National Board of Boiler and Pressure Vessel Inspectors and the State of Washington and employed by Hartford Steam Boiler Of Connecticut of Hartford, Connecticut have inspected the components described in this Owner's Report during the period 8/8/04 to 8/24/04 and state to the best of my knowledge and belief, the Owner has performed examinations and taken corrective measures described in this Owner's Report in accordance with the requirements of the ASME Code, Section XI.
By signing this certificate neither the Inspector nor his employer makes any warranty, expressed or implied, concerning the examinations and corrective measures described in this Owner's Report. Furthermore, neither the Inspector nor his employer shall be liable in any manner for any personal injury or property damage or a loss of any kind arising from or connected with this inspection.

Inspector's Signature Commissions 7485LW NI NS
National Board, State, and Endorsements

Date 8/24/04

PLAN No 2-1900

ENERGY NORTHWEST
People·Vision·Solutions

FORM NIS-2 OWNER'S REPORT FOR REPAIRS OR REPLACEMENTS
As Required By The Provisions Of The ASME Code Section XI

Date: 08/20/04
Sheet: 1 Of 1
Unit: Not Applicable

1. **Owner:** Energy Northwest
   Address: Columbia Generating Station, North Power Plant Loop, Richland, Washington, 99352
2. **Plant:** Columbia Generating Station
   Address: Columbia Generating Station, North Power Plant Loop, Richland, Washington, 99352
3. **(a) Work Performed By:** Energy Northwest
   (b) Repair Organization P.O. No, Job No, etc.: Energy Northwest
   (c) Type Code Symbol Stamp: Not Applicable
   (d) Certificate Of Authorization No.: Not Applicable
   (e) Expiration Date: Not Applicable
4. **Identification Of System:** Main Steam (MS) System
5. **(a) Applicable Construction Code:** ASME Section III, Code Class 1, 1971 Edition with Winter 1971 Addenda, Code Case: None
   (b) Applicable Edition Of ASME Section XI Utilized For Repairs Or Replacements: 1989 Edition with no Addenda, Code Case: None
6. **Identification Of Components Repaired Or Replaced And Replacement Components**

Name Of Component	Name Of Manufacturer	Manufacturer's Serial No	National Board No	Other I.D.	Year Built	Repaired, Replaced Or Replacement	ASME Code Stamped (Yes Or No) Code Class
MS-V-28D	Rockwell	JT-78	71	N/A	1973	~~REPAIR~~ KS 10/5/04	Yes, Code Class 1

7. **Description Of Work Performed:** Repaired the bore inside (ID) surfaces for valve MS-V-28D, Serial No JT-78. The repair work was performed as follows:
   1) Prepared the gouges for weld repair.
   2) Performed magnetic particle (MT) examination on the final cavities. Magnetic particle (MT) examination results acceptable.
   3) Weld repaired (weld built up) the cavities.
   4) Performed visual examination on the final welded surfaces. Visual examination results acceptable.
   5) Machined the weld repaired areas.
   6) Performed liquid penetrant (PT) examination on the final machined areas. Liquid penetrant (PT) examination results acceptable.
   7) Performed post repair VT-3 visual examinations on the valve body accessible internal surfaces. VT-3 visual examination results acceptable.

NOTES -

1) Post repair VT-3 visual examinations on the valve bonnet accessible internal surfaces was not required since the bonnet was not repaired.
2) See ASME Section XI Plan No's 2-1907 and 2-1908 for additional work performed on valve MS-V-28D.

PLAN No 2-1900

ENERGY NORTHWEST
People·Vision·Solutions

FORM NIS-2 OWNER'S REPORT FOR REPAIRS OR REPLACEMENTS (Back)

8 Tests Conducted: Hydrostatic ☐ **Pneumatic** ☐ **Nominal Operating Pressure** ☐ **Other** ☐ *

Test Pressure: Psig **Test Temperature:** °F

Component Design Pressure: Psig **Temperature:** °F

9. Remarks: * See ASME Section XI Plan No 2-1908 for the pressure test.

CERTIFICATE OF COMPLIANCE

We certify that the statements made in this Owner's Report are correct and this replacement *conforms to the rules of the ASME Code, Section XI.*

Type Code Symbol Stamp: Not Applicable

Certificate Of Authorization No.: Not Applicable

Expiration Date: Not Applicable

Prepared By Kuldip Singh **Signed By** Kuldip Singh

Kuldip Singh - Program Lead Engineer (PLE) Kuldip Singh - Program Lead Engineer (PLE)

Date 8/20/04 **Date** 8/20/04

CERTIFICATE OF INSERVICE INSPECTION

I, the undersigned, holding a valid commission issued by the National Board of Boiler and Pressure Vessel Inspectors and the State of Washington *and employed by* Hartford Steam Boiler Of Connecticut of Hartford, Connecticut *have inspected the components described in this Owner's Report during the period* 8/3/04 *to* 8/25/04 *and state to the best of my knowledge and belief, the Owner has performed examinations and taken corrective measures described in this Owner's Report in accordance with the requirements of the ASME Code, Section XI.*

By signing this certificate neither the Inspector nor his employer makes any warranty, expressed or implied, concerning the examinations and corrective measures described in this Owner's Report. Furthermore, neither the Inspector nor his employer shall be liable in any manner for any personal injury or property damage or a loss of any kind arising from or connected with this inspection.

Inspector's Signature **Commissions** 7486 NI NS

National Board, State, and Endorsements

Date 8/25/04

PLAN No 2-1901

ENERGY NORTHWEST
People·Vision·Solutions

FORM NIS-2 OWNER'S REPORT FOR REPAIRS OR REPLACEMENTS
As Required By The Provisions Of The ASME Code Section XI

1. Owner: Energy Northwest
Address: Columbia Generating Station, North Power Plant Loop, Richland, Washington, 99352
2. Plant: Columbia Generating Station
Address: Columbia Generating Station, North Power Plant Loop, Richland, Washington, 99352

Date: 07/08/05
Sheet: 1 Of 1
Unit: Not Applicable

3. (a) Work Performed By: Energy Northwest
(b) Repair Organization P.O. No, Job No, etc.: Energy Northwest
(c) Type Code Symbol Stamp: Not Applicable
(d) Certificate Of Authorization No.: Not Applicable
(e) Expiration Date: Not Applicable
4. Identification Of System: Main Steam (MS) System
5. (a) Applicable Construction Code: ASME Section III, Code Class 3, 1971 Edition with Winter 1973 Addenda, Code Case: None
(b) Applicable Edition Of ASME Section XI Utilized For Repairs Or Replacements: 1989 Edition with no Addenda, Code Case: None
6. Identification Of Components Repaired Or Replaced And Replacement Components

Name Of Component	Name Of Manufacturer	Manufacturer's Serial No	National Board No	Other I.D.	Year Built	Repaired, Replaced Or Replacement	ASME Code Stamped (Yes Or No) Code Class
MS(18)-2-7	WPPSS*	MS(18)-2-7-P1	N/A	N/A	1983	----------	Yes, Code Class 3

7. Description Of Work Performed: Replaced bolt for the outlet bolted flanged joint associated with relief valve MS-RV-3C. The replacement work was performed as follows:

1) Removed existing bolt for the relief valve outlet bolted flanged joint.
2) Installed one (1) new bolt for the relief valve outlet bolted flanged joint.

NOTES -
1) * Company name changed from Washington Public Power Supply System (WPPSS) to Energy Northwest (EN) in 1999.

PLAN No 2-1901

ENERGY NORTHWEST
People·Vision·Solutions

FORM NIS-2 OWNER'S REPORT FOR REPAIRS OR REPLACEMENTS (Back)

8 Tests Conducted: Hydrostatic [ ] Pneumatic [ ] Nominal Operating Pressure [ ] None [X]
Test Pressure: Psig Test Temperature: °F
Component Design Pressure: Psig Temperature: °F

9. Remarks (Applicable Manufacturer's Data Reports to be attached): None

CERTIFICATE OF COMPLIANCE

We certify that the statements made in this Owner's Report are correct and this replacement conforms to the rules of the ASME Code, Section XI.
Type Code Symbol Stamp: Not Applicable
Certificate Of Authorization No.: Not Applicable
Expiration Date: Not Applicable

Prepared By Kuldip Singh - Program Lead Engineer (PLE) Signed By Kuldip Singh - Program Lead Engineer (PLE)

Date 7/9/05 Date 7/9/05

CERTIFICATE OF INSERVICE INSPECTION

I, the undersigned, holding a valid commission issued by the National Board of Boiler and Pressure Vessel Inspectors and the State of Washington and employed by Hartford Steam Boiler Of Connecticut of Hartford, Connecticut have inspected the components described in this Owner's Report during the period 5-22-2005 to 7-12-2005 and state to the best of my knowledge and belief, the Owner has performed examinations and taken corrective measures described in this Owner's Report in accordance with the requirements of the ASME Code, Section XI.
By signing this certificate neither the Inspector nor his employer makes any warranty, expressed or implied, concerning the examinations and corrective measures described in this Owner's Report. Furthermore, neither the Inspector nor his employer shall be liable in any manner for any personal injury or property damage or a loss of any kind arising from or connected with this inspection.

Inspector's Signature Commissions 10655W A, B, H, E
National Board, State, and Endorsements

Date 7-12-2005

PLAN No 2-1903

ENERGY NORTHWEST
People·Vision·Solutions

FORM NIS-2 OWNER'S REPORT FOR REPAIRS OR REPLACEMENTS
As Required By The Provisions Of The ASME Code Section XI

Date: 07/02/05
Sheet: 1 Of 1
Unit: Not Applicable

1. **Owner:** Energy Northwest
   Address: Columbia Generating Station, North Power Plant Loop, Richland, Washington, 99352
2. **Plant:** Columbia Generating Station
   Address: Columbia Generating Station, North Power Plant Loop, Richland, Washington, 99352
3. **(a) Work Performed By:** Energy Northwest
   (b) Repair Organization P.O. No, Job No, etc.: Energy Northwest
   (c) Type Code Symbol Stamp: Not Applicable
   (d) Certificate Of Authorization No.: Not Applicable
   (e) Expiration Date: Not Applicable
4. **Identification Of System:** Reactor Building Closed Cooling (RCC) System
5. **(a) Applicable Construction Code:** ASME Section III, Code Class 3, 1971 Edition with Winter 1973 Addenda, Code Case: None
   (b) Applicable Edition Of ASME Section XI Utilized For Repairs Or Replacements: 1989 Edition with no Addenda, Code Case: None
6. **Identification Of Components Repaired Or Replaced And Replacement Components**

Name Of Component	Name Of Manufacturer	Manufacturer's Serial No	National Board No	Other I.D.	Year Built	Repaired, Replaced Or Replacement	ASME Code Stamped (Yes Or No) Code Class
RCC(3)-1	WPPSS*	RCC(3)-1-P1	N/A	N/A	1983	----------	Yes, Code Class 3
RCC(36)-1	WPPSS*	RCC(36)-1-P1	N/A	N/A	1983	----------	Yes, Code Class 3

7. **Description Of Work Performed:** Replaced studs and nuts for the bolted piping flanged joints associated with heat exchanger EDR-HX-1. The replacement work was performed as follows:

Reactor Building Closed Cooling (RCC) Return Line - Pipe To EDR-HX-1

1) Removed existing studs and nuts from the bolted piping flanged joint.
2) Installed eight (8) new studs for the bolted piping flanged joint.
3) Installed sixteen (16) new nuts for the bolted piping flanged joint.
4) Performed VT-2 visual examination during pressure test to confirm pressure boundary integrity of the bolted piping flanged joint. No evidence of leakage during the pressure test.

Reactor Building Closed Cooling (RCC) Return Line - Pipe To Pipe

1) Removed existing studs and nuts from the bolted piping flanged joint.
2) Installed eight (8) new studs for the bolted piping flanged joint.
3) Installed sixteen (16) new nuts for the bolted piping flanged joint.
4) Performed VT-2 visual examination during pressure test to confirm pressure boundary integrity of the bolted piping flanged joint. No evidence of leakage during the pressure test.

Reactor Building Closed Cooling (RCC) Supply Line - Pipe To EDR-HX-1

1) Removed existing studs and nuts from the bolted piping flanged joint.
2) Installed eight (8) new studs for the bolted piping flanged joint.
3) Installed sixteen (16) new nuts for the bolted piping flanged joint.
4) Performed VT-2 visual examination during pressure test to confirm pressure boundary integrity of the bolted piping flanged joint. No evidence of leakage during the pressure test.

NOTES -

1) * Company name changed from Washington Public Power Supply System (WPPSS) to Energy Northwest (EN) in 1999.

PLAN No 2-1903

ENERGY NORTHWEST
People·Vision·Solutions

FORM NIS-2 OWNER'S REPORT FOR REPAIRS OR REPLACEMENTS (Back)

8 Tests Conducted: Hydrostatic [ ] Pneumatic [ ] Nominal Operating Pressure [X] [ ]
Test Pressure: 75 Psig Test Temperature: 67° F
Component Design Pressure: 195 Psig Temperature: 150° F

9. Remarks (Applicable Manufacturer's Data Reports to be attached): None

CERTIFICATE OF COMPLIANCE

We certify that the statements made in this Owner's Report are correct and this replacement conforms to the rules of the ASME Code, Section XI.
Type Code Symbol Stamp: Not Applicable
Certificate Of Authorization No.: Not Applicable
Expiration Date: Not Applicable

Prepared By Kuldip Singh - Program Lead Engineer (PLE) Signed By Kuldip Singh - Program Lead Engineer (PLE)

Date 7/2/05 Date 7/2/05

CERTIFICATE OF INSERVICE INSPECTION

I, the undersigned, holding a valid commission issued by the National Board of Boiler and Pressure Vessel Inspectors and the State of Washington and employed by Hartford Steam Boiler Of Connecticut of Hartford, Connecticut have inspected the components described in this Owner's Report during the period 3-7-2005 to 7-6-2005 and state to the best of my knowledge and belief, the Owner has performed examinations and taken corrective measures described in this Owner's Report in accordance with the requirements of the ASME Code, Section XI.
By signing this certificate neither the Inspector nor his employer makes any warranty, expressed or implied, concerning the examinations and corrective measures described in this Owner's Report. Furthermore, neither the Inspector nor his employer shall be liable in any manner for any personal injury or property damage or a loss of any kind arising from or connected with this inspection.

Inspector's Signature Commissions 10655 W A, B, N, E
National Board, State, and Endorsements

Date 7-6-2005

PLAN No 2-1905

ENERGY NORTHWEST
People·Vision·Solutions

FORM NIS-2 OWNER'S REPORT FOR REPAIRS OR REPLACEMENTS
As Required By The Provisions Of The ASME Code Section XI

Date: 08/20/04
Sheet: 1 Of 1
Unit: Not Applicable

1. **Owner:** Energy Northwest
   Address: Columbia Generating Station, North Power Plant Loop, Richland, Washington, 99352
2. **Plant:** Columbia Generating Station
   Address: Columbia Generating Station, North Power Plant Loop, Richland, Washington, 99352
3. **(a) Work Performed By:** Energy Northwest
   (b) Repair Organization P.O. No, Job No, etc.: Energy Northwest
   (c) Type Code Symbol Stamp: Not Applicable
   (d) Certificate Of Authorization No.: Not Applicable
   (e) Expiration Date: Not Applicable
4. **Identification Of System:** Main Steam (MS) System
5. **(a) Applicable Construction Code:** ASME Section III, Code Class 1, 1971 Edition with Winter 1971 Addenda, Code Case: None
   (b) Applicable Edition Of ASME Section XI Utilized For Repairs Or Replacements: 1989 Edition with no Addenda, Code Case: None
6. **Identification Of Components Repaired Or Replaced And Replacement Components**

Name Of Component	Name Of Manufacturer	Manufacturer's Serial No	National Board No	Other I.D.	Year Built	Repaired, Replaced Or Replacement	ASME Code Stamped (Yes Or No) Code Class
MS-V-22D	Rockwell	JT-41	68	N/A	1973	----------	Yes, Code Class 1

7. **Description Of Work Performed:** Performed the following ASME related work on valve MS-V-22D, Serial No JT-41:
   1) Performed post repair VT-3 visual examinations on the valve body accessible internal surfaces. VT-3 visual examination resulted in observing several galled and or gouged areas. Galled and or gouged areas were evaluated and were determined to be acceptable.

NOTES -

1) ASME Section XI Plan No 2-1905 was issued to repair by welding on the bore inside (ID) surfaces for valve MS-V-22D, Serial No JT-41. The repair by welding on the bore inside (ID) surfaces was not required to be performed.
2) Post repair VT-3 visual examinations on the valve bonnet accessible internal surfaces was not required since the bonnet was not repaired.
3) See ASME Section XI Plan No 2-1899 for additional work performed on valve MS-V-22D, Serial No JT-41.

PLAN No 2-1905

ENERGY NORTHWEST
People·Vision·Solutions

FORM NIS-2 OWNER'S REPORT FOR REPAIRS OR REPLACEMENTS (Back)

8 Tests Conducted: Hydrostatic ☐ **Pneumatic** ☐ **Nominal Operating Pressure** ☐ **Other** ☒ *

Test Pressure: Psig — **Test Temperature:** °F

Component Design Pressure: Psig — **Temperature:** °F

9. Remarks: * See ASME Section XI Plan No 2-1899 for the pressure test.

CERTIFICATE OF COMPLIANCE

We certify that the statements made in this Owner's Report are correct and this repair ***conforms to the rules of the ASME Code, Section XI.***

Type Code Symbol Stamp: Not Applicable

Certificate Of Authorization No.: Not Applicable

Expiration Date: Not Applicable

Prepared By Kuldip Singh — Kuldip Singh - Program Lead Engineer (PLE)

Signed By Kuldip Singh — Kuldip Singh - Program Lead Engineer (PLE)

Date 8/20/04 — ***Date*** 8/20/04

CERTIFICATE OF INSERVICE INSPECTION

I, the undersigned, holding a valid commission issued by the National Board of Boiler and Pressure Vessel Inspectors and the State of Washington ***and employed by*** Hartford Steam Boiler Of Connecticut of Hartford, Connecticut ***have inspected the components described in this Owner's Report during the period*** 8-7-04 ***to*** 8-25-04 ***and state to the best of my knowledge and belief, the Owner has performed examinations and taken corrective measures described in this Owner's Report in accordance with the requirements of the ASME Code, Section XI.***

By signing this certificate neither the Inspector nor his employer makes any warranty, expressed or implied, concerning the examinations and corrective measures described in this Owner's Report. Furthermore, neither the Inspector nor his employer shall be liable in any manner for any personal injury or property damage or a loss of any kind arising from or connected with this Inspection.

Inspector's Signature — ***Commissions*** 7486W NI NS — National Board, State, and Endorsements

Date 8-25-04

PLAN No 2-1906

ENERGY NORTHWEST
People·Vision·Solutions

FORM NIS-2 OWNER'S REPORT FOR REPAIRS OR REPLACEMENTS
As Required By The Provisions Of The ASME Code Section XI

1. Owner: Energy Northwest
Address: Columbia Generating Station, North Power Plant Loop, Richland, Washington, 99352
2. Plant: Columbia Generating Station
Address: Columbia Generating Station, North Power Plant Loop, Richland, Washington, 99352

Date: 08/19/04
Sheet: 1 Of 1
Unit: Not Applicable

3. (a) Work Performed By: Energy Northwest
(b) Repair Organization P.O. No, Job No, etc.: Energy Northwest
(c) Type Code Symbol Stamp: Not Applicable
(d) Certificate Of Authorization No.: Not Applicable
(e) Expiration Date: Not Applicable
4. Identification Of System: Main Steam (MS) System
5. (a) Applicable Construction Code: ASME Section III, Code Class 1, 1971 Edition with Winter 1973 Addenda, Code Case: None
(b) Applicable Edition Of ASME Section XI Utilized For Repairs Or Replacements: 1989 Edition with no Addenda, Code Case: N-416-1
6. Identification Of Components Repaired Or Replaced And Replacement Components

Name Of Component	Name Of Manufacturer	Manufacturer's Serial No	National Board No	Other I.D.	Year Built	Repaired, Replaced Or Replacement	ASME Code Stamped (Yes Or No) Code Class
MS(9)-4	WPPSS *	MS(9)-4P1	N/A	N/A	1983	----------	Yes, Code Class 1
MS-V-67D	Borg Warner	28463	N/A	N/A	1978	Replaced	Yes, Code Class 1
MS-V-67D	Borg Warner	26AZL	N/A	N/A	2004	Replacement	Yes, Code Class 1

7. Description Of Work Performed: Replaced existing valve MS-V-67D. The replacement work was performed as follows:
1) Removed existing valve MS-V-67D, Serial No 28463.
2) Prepped cut pipe end.
3) Performed liquid penetrant (PT) examination on the final prepped pipe end. Liquid penetrant (PT) examination results acceptable.
4) Installed replacement valve MS-V-67D, Serial No 26AZL.
5) Made required socket weld.
6) Performed visual examination on the final socket weld. Visual examination results acceptable.
7) Performed liquid penetrant (PT) examination on the final socket weld. Liquid penetrant (PT) examination results acceptable.
8) Performed VT-2 visual examination during pressure test to confirm pressure boundary integrity of the joint. No evidence of leakage during the pressure test.

NOTES -
1) * Company name changed from Washington Public Power Supply System (WPPSS) to Energy Northwest (EN) in 1999.
2) The existing ASME Code Stamped piping system in which the replacement valve MS-V-67D, Serial No 26AZL was installed is Main Steam (MS) piping system MS(9)-4-P1. This piping system is certified to comply with ASME Section III, Code Class 1, 1971 Edition with Winter 1973 Addenda requirements.
3) The replacement valve MS-V-67D, Serial No 26AZL is certified to comply with ASME Section III, Code Class 1, 1974 Edition with Summer 1975 Addenda requirements.
4) The liquid penetrant (PT) examination on the final socket weld was performed in accordance with the requirements of ASME Section III, Code Class 1, 1992 Edition with no Addenda to satisfy the requirements outlined in Code Case N-416-1.
5) The VT-2 visual examination during pressure test to confirm pressure boundary integrity of the joints was performed in accordance with the requirements of ASME Section XI, 1992 Edition with no Addenda to satisfy the requirements outlined in Code Case N-416-1.
6) Borg Warner valves are now being manufactured by Flowserve.

PLAN No 2-1906

ENERGY NORTHWEST
People·Vision·Solutions

FORM NIS-2 OWNER'S REPORT FOR REPAIRS OR REPLACEMENTS (Back)

8 Tests Conducted: Hydrostatic [ ] *Pneumatic* [ ] *Nominal Operating Pressure* [X] *None* [ ]
Test Pressure: 931 Psig *Test Temperature:* 527.7° F
Component Design Pressure: 1250 Psig *Temperature:* 575° F

9. Remarks: See attached NPV-1 Code Data Report for the replacement valve MS-V-67D, Serial No 26AZL.

CERTIFICATE OF COMPLIANCE

We certify that the statements made in this Owner's Report are correct and this replacement *conforms to the rules of the ASME Code, Section XI.*
Type Code Symbol Stamp: Not Applicable
Certificate Of Authorization No.: Not Applicable
Expiration Date: Not Applicable

Prepared By Kuldip Singh - Program Lead Engineer (PLE) *Signed By* Kuldip Singh - Program Lead Engineer (PLE)

Date 8/20/04 *Date* 8/20/04

CERTIFICATE OF INSERVICE INSPECTION

I, the undersigned, holding a valid commission issued by the National Board of Boiler and Pressure Vessel Inspectors and the State of Washington *and employed by* Hartford Steam Boiler Of Connecticut of Hartford, Connecticut *have inspected the components described in this Owner's Report during the period* 8-9-04 *to* 8-24-04 *and state to the best of my knowledge and belief, the Owner has performed examinations and taken corrective measures described in this Owner's Report in accordance with the requirements of the ASME Code, Section XI.*
By signing this certificate neither the Inspector nor his employer makes any warranty, expressed or implied, concerning the examinations and corrective measures described in this Owner's Report. Furthermore, neither the Inspector nor his employer shall be liable in any manner for any personal injury or property damage or a loss of any kind arising from or connected with this inspection.

Inspector's Signature *Commissions* 7486W NI NS
National Board, State, and Endorsements

Date 8/24/04

PLAN No. 2-1906

FORM NPV-1 CERTIFICATE HOLDERS' DATA REPORT FOR NUCLEAR PUMPS OR VALVES*

As Required by the Provisions of the ASME Code, Section III, Div. 1

1. Manufactured and certified by Flowserve Corporation, 1900 S. Saunders Street, Raleigh, NC 27603
(Name and Address of N Certificate Holder)
2. Manufactured for Energy Northwest, P. O. Box 968, Richland, WA 99352
(Name and Address of Purchaser)
3. Location of Installation Energy Northwest, Columbia Generating Station, North Power Plant Loop, Richland, WA 99352
(Name and Address)
4. Model No., Series No., or Type Gate Valve Drawing 76890 Rev F CRN --
5. ASME Code, Section III, Division 1: 1974 (edition) Summer, 1975 (addenda date) 1 (class) N/A (Code Case no.)
6. Pump or Valve Valve Nominal Inlet Size 1-1/2" (in.) Outlet Size 1-1/2" (inch)
7. Material: Body SA105 Bonnet SA105 Disk SA487CA6NM Bolting N/A

(a) Cert. Holder's Serial No.	(b) Nat'l Board No.	(c) Body Serial No.	(d) Bonnet Serial No.	(e) Disk Serial No.
26AZL	N/A	79670-3	20811-1-13	M8189-3

MS-V-67D, S/N 26AZL

Philip Smith
8/19/04

*Supplemental information in form of lists, sketches or drawings may be used provided (1) size is 8-1/2" x 11". (2) Information in items 1 through 4 on this Data Report is included on each sheet, and (3) each sheet is numbered and the number of sheets is recorded at the top of this form.

FORM NPV-1 (Back-Pg. 2 of 2)

Certificate Holder's Serial No. 26AZL

8. Design conditions 3600 (pressure) psi 100 (temperature) °F or valve pressure class 1500

9. Cold working pressure 3600 psi at 100 °F

10. Hydrostatic test 5400 psi. Disk Differential test pressure 3960 psi.

11. Remarks: Nuclear gate valve.

S. O. 26728

CERTIFICATION OF DESIGN

Design specification certified by	Richard Schlosser	P.E. State	WA	Reg. no.	21701
Design Report certified by	Ronald S. Farrell	P.E. State	NC	Reg. no.	028656

CERTIFICATE OF COMPLIANCE

We certify that the statements made in this report are correct and that this pump, or valve, conforms to the rules of construction of the ASME Code for Nuclear Power Plant Components, Section III, Div. 1.,

N Certificate of Authorization No. N-1562 Expires Nov. 26, 2006

Date 8/8/04 Name Flowserve Corporation (N Certificate Holder) Signed (Authorized Representative)

CERTIFICATE OF INSPECTION

I, the undersigned, holding a valid commission issued by the National Board of Boiler and Pressure Vessel Inspectors and the State or Province of North Carolina and employed by HSB CT of Hartford Connecticut have inspected the pump, or valve, described in this Data Report on 8 / 8 / 04, and state that, to the best of my knowledge and belief, the Certificate Holder has constructed this pump, or valve, in accordance with ASME Code, Section III, Div. 1.

By signing this certificate, neither the Inspector nor his employer makes any warranty, expressed or implied, concerning the component described in this Data Report. Furthermore, neither the Inspector nor his employer shall be liable in any manner for any personal injury or property damage or a loss of any kind arising from or connected with this Inspection.

Date 8 / 8 / 04

Signed (Inspector) Commissions NC 1527 (Nat'l Bd., State, Prov. and No.)

ENERGY NORTHWEST
People·Vision·Solutions

FORM NIS-2 OWNER'S REPORT FOR REPAIRS OR REPLACEMENTS
As Required By The Provisions Of The ASME Code Section XI

Date: 08/20/04
Sheet: 1 Of 1
Unit: Not Applicable

1. Owner: Energy Northwest
Address: Columbia Generating Station, North Power Plant Loop, Richland, Washington, 99352
2. Plant: Columbia Generating Station
Address: Columbia Generating Station, North Power Plant Loop, Richland, Washington, 99352
3. (a) Work Performed By: Energy Northwest
(b) Repair Organization P.O. No, Job No, etc.: Energy Northwest
(c) Type Code Symbol Stamp: Not Applicable
(d) Certificate Of Authorization No.: Not Applicable
(e) Expiration Date: Not Applicable
4. Identification Of System: Main Steam (MS) System
5. (a) Applicable Construction Code: ASME Section III, Code Class 1, 1971 Edition with Winter 1971 Addenda, Code Case: None
(b) Applicable Edition Of ASME Section XI Utilized For Repairs Or Replacements: 1989 Edition with no Addenda, Code Case: None
6. Identification Of Components Repaired Or Replaced And Replacement Components

Name Of Component	Name Of Manufacturer	Manufacturer's Serial No	National Board No	Other I.D.	Year Built	Repaired, Replaced Or Replacement	ASME Code Stamped (Yes Or No) Code Class
MS-V-28D	Rockwell	JT-78	71	N/A	1973	----------	Yes, Code Class 1
Pilot disc	Rockwell	215585-37	N/A	N/A	1990	Replacement	Yes, Code Class 1
Main disc	Rockwell	81292-3	N/A	N/A	2004	Replacement	Yes, Code Class 1

7. Description Of Work Performed: Assembled pilot disc (stem disc) main disc (piston disc) for use for valve MS-V-28D, Serial No JT-78. The parts were assembled as follows:

1) Assembled pilot disc (stem disc) Serial No 215585-37.
2) Assembled main disc (piston disc) Serial No 81292-3.

NOTES -

1) The assembled parts were installed in valve MS-V-28D, Serial No JT-78 in accordance with ASME Section XI Plan No 2-1908
2) See ASME Section XI Plan No's 2-1900 and 2-1908 for additional work performed on valve MS-V-28D.
3) Rockwell International/Edward Valves, Inc parts are now being manufactured by Flowserve.

PLAN No 2-1907

ENERGY NORTHWEST
People·Vision·Solutions

FORM NIS-2 OWNER'S REPORT FOR REPAIRS OR REPLACEMENTS (Back)

8 Tests Conducted: Hydrostatic ☐ **Pneumatic** ☐ **Nominal Operating Pressure** ☐ **Other** ☐

Test Pressure: Psig **Test Temperature:** °F

Component Design Pressure: Psig **Temperature:** °F

9. Remarks: 1) See attached N-2 Code Data Reports for the following replacement parts:

Part Description	Serial No
Pilot disc (stem disc)	215585-37
Main disc (piston disc)	81292-3

2) See ASME Section XI Plan No 2-1908 for the pressure test.

CERTIFICATE OF COMPLIANCE

We certify that the statements made in this Owner's Report are correct and this replacement ***conforms to the rules of the ASME Code, Section XI.***

Type Code Symbol Stamp: Not Applicable

Certificate Of Authorization No.: Not Applicable

Expiration Date: Not Applicable

Prepared By Kuldip Singh - Program Lead Engineer (PLE) ***Signed By*** Kuldip Singh - Program Lead Engineer (PLE)

Date 8/20/04 ***Date*** 8/20/04

CERTIFICATE OF INSERVICE INSPECTION

I, the undersigned, holding a valid commission issued by the National Board of Boiler and Pressure Vessel Inspectors and the State of Washington ***and employed by*** Hartford Steam Boiler Of Connecticut of Hartford, Connecticut ***have inspected the components described in this Owner's Report during the period*** 8-9-04 ***to*** 8-25-04 ***and state to the best of my knowledge and belief, the Owner has performed examinations and taken corrective measures described in this Owner's Report in accordance with the requirements of the ASME Code, Section XI.***

By signing this certificate neither the Inspector nor his employer makes any warranty, expressed or implied, concerning the examinations and corrective measures described in this Owner's Report. Furthermore, neither the Inspector nor his employer shall be liable in any manner for any personal injury or property damage or a loss of any kind arising from or connected with this inspection.

Inspector's Signature ***Commissions*** 7486W NI NS National Board, State, and Endorsements

Date 8-25-04

PLAN No. 2-1907

SATISFACTORY ✓ UNSATISFACTORY ____

[illegible] 8.9.04

RECEIPT INSPECTOR / LEVEL / DATE

FORM N-2 CERTIFICATE HOLDERS' DATA REPORT FOR IDENTICAL NUCLEAR PARTS AND APPURTENANCES*

As Required by the Provisions of the ASME Code, Section III
Not to Exceed One Day's Production

1. Manufactured and certified by Flowserve Corporation, 1900 S. Saunders St., Raleigh, NC 27603 (name and address of NPT Certificate Holder)
2. Manufactured for Energy Northwest, P. O. Box 968, Richland, WA 99352 (name and address of purchaser)
3. Location of installation Energy Northwest, Columbia Generating Station, N. Powerplant Loop, Richland, WA (name and address)
4. Type PD-422885, R/E* (drawing no.) SA105 (mat'l. spec. no.) N/A (tensile strength) N/A (CRN) 2004 (year built)
5. ASME Code, Section III, Division 1: 1971 (edition) Winter, 1971 (addenda date) 1 (class) N/A (Code Case no.)
6. Fabricated in accordance with Const. Spec. (Div. 2 only) N/A (no.) Revision N/A Date N/A
7. Remarks: Disk-Piston assembly for 26" 1612JMMNTY Valve
   Disk material meets ASME Section II, 1974 Edition
   * Sheet 3B. Sheet 1, R/U S. O. 29257
8. Nom. thickness (in.) N/A Min. design thickness (in.) Per #4 Dia. ID (ft & in.) N/A Length overall (ft & in.) N/A
9. When applicable, Certificate Holders' Data Reports are attached for each item of this report:

	Part or Appurtenance Serial Number	National Board No. in Numerical Order
(1)	81292-3	N/A
(2)		
(3)		
(4)		
(5)		
(6)		
(7)	MS-V-28D MAIN	
(8)		
(9)		
(10)	DISC S/N	81292-3
(11)		
(12)		
(13)		
(14)		
(15)		[illegible] Supt
(16)		
(17)		8/20/04
(18)		
(19)		
(20)		
(21)		
(22)		
(23)		
(24)		
(25)		

	Part or Appurtenance Serial Number	National Board No. in Numerical Order
(26)		
(27)		
(28)		
(29)		
(30)		
(31)		
(32)		
(33)		
(34)		
(35)		
(36)		
(37)		
(38)		
(39)		
(40)		
(41)		
(42)		
(43)		
(44)		
(45)		
(46)		
(47)		
(48)		
(49)		
(50)		

10. Design pressure 1250 psi. Temp. 575 °F. Hydro. test pressure N/A (when applicable) at temp. °F

* Supplemental information in the form of lists, sketches, or drawings may be used provided (1) size is 8½ x 11, (2) information in items 2 and 3 on this Data Report is included on each sheet, (3) each sheet is numbered and the number of sheets is recorded at the top of this form.

(7/98) This form (E00040) may be obtained from the Order Dept., ASME, 22 Law Drive, Box 2300, Fairfield, NJ 07007-2300.

3

SATISFACTORY ✓ UNSATISFACTORY ____

[illegible] II 8.9.04

RECEIPT INSPECTOR / LEVEL / DATE

FORM N-2 (Back — Pg 2 of 2)

Certificate Holder's Serial Nos. 81292-3 through —

CERTIFICATION OF DESIGN

Design specifications certified by Boyd Brooks (when applicable) P.E. State CA Reg. no. 13655

Design report* certified by S. L. Adams (when applicable) P.E. State NC Reg. no. 4187

CERTIFICATE OF COMPLIANCE

We certify that the statements made in this report are correct and that this (these) Part(s) conforms to the rules of construction of the ASME Code, Section III, Division 1.

NPT Certificate of Authorization No. N-1563 Expires November 26, 2006

Date 8/8/04 Name Flowserve Corporation (NPT Certificate Holder) Signed [illegible] (authorized representative)

CERTIFICATE OF INSPECTION

I, the undersigned, holding a valid commission issued by the National Board of Boiler and Pressure Vessel Inspectors and the State or Province of NC and employed by HSB CT of Hartford, CT have inspected these items described in this Data Report on 8-8-04, and state that to the best of my knowledge and belief, the Certificate Holder has fabricated these parts or appurtenances in accordance with the ASME Code, Section III, Division 1. Each part listed has been authorized for stamping on the date shown above.

By signing this certificate, neither the Inspector nor his employer makes any warranty, expressed or implied, concerning the equipment described in this Data Report. Furthermore, neither the Inspector nor his employer shall be liable in any manner for any personal injury or property damage or loss of any kind arising from or connected with this inspection.

Date 8-8-04 Signed [illegible] (Authorized Nuclear Inspector) Commissions NC 1527 (Nat'l. Bd. (incl. endorsements) and state or prov. and no.)

4

PLAN No. 2-1907

FORM N-2 CERTIFICATE HOLDERS' DATA REPORT FOR IDENTICAL NUCLEAR PARTS AND APPURTENANCES*

As Required by the Provisions of the ASME Code, Section III
Not To Exceed One Day's Production

Pg. 1 of 1

1. Manufactured and certified by Edward Valves, Inc., 1900 S. Saunders St., Raleigh, NC 27603 (name and address of NPT Certificate Holder)
2. Manufactured for Washington Public Power Supply System, Richland, Washington 99352 (name and address of purchaser)
3. Location of installation Hanford II, Richland, Washington 99352 (name and address)
4. Type PD422885 R/T (drawing no.) SA105 (mat'l. spec. no.) N/A (tensile strength) N/A (CRN) 1990 (year built)
5. ASME Code, Section III: 1971 (edition) Winter 1971 (addenda date) 1 (class) N/A (Code Case no.)
6. Fabricated in accordance with Const. Spec. (Div. 2 only) N/A (no.) Revision N/A Date N/A
7. Remarks: Three (3) stem disk/stem assemblies for size 26 figure 1612 JMANTY flite-flow balanced stop valve (Ref. S.O. E36-14487)
8. Nom. thickness (in.) N/A Min. design thickness (in.) Per #4 Dia. ID (ft & in.) N/A Length overall (ft & in.) N/A
9. When applicable, Certificate Holders' Data Reports are attached for each item of this report:

Part or Appurtenance Serial Number	National Board No. in Numerical Order	Part or Appurtenance Serial Number	National Board Number in Numerical Order
(1) 215585-35		(26)	
(2) 215585-36		(27)	
(3) 215585-37		(28)	
(4)		(29)	
(5)		(30)	
(6)		(31)	
(7) MS-V-28D, PILOT		(32)	
(8)		(33)	
(9) DISC S/N 215585-37		(34)	
(10)		(35)	
(11)		(36)	
(12) Philip Smith		(37)	
(13)		(38)	
(14) 8/20/04		(39)	
(15)		(40)	
(16)		(41)	
(17)		(42)	
(18)		(43)	
(19)		(44)	
(20)		(45)	
(21)		(46)	
(22)		(47)	
(23)		(48)	
(24)		(49)	
(25)		(50)	

10. Design pressure 1250 psi. Temp. 575 °F. Hydro. test pressure N/A (when applicable) at temp. °F

*Supplemental information in the form of lists, sketches, or drawings may be used provided (1) size is 8½ × 11, (2) information in items 2 and 3 on this Data Report is included on each sheet, (3) each sheet is numbered and the number of sheets is recorded at the top of this form.

(12/86) This form (E00040) may be obtained from the Order Dept., ASME, 22 Law Drive, Box 2300, Fairfield, NJ 07007-2300.

2

FORM N-2 (back)

Mfr. Serial No. 215585-35363

CERTIFICATION OF DESIGN

Design specifications certified by Boyd Brooks (when applicable) P.E. State CA Reg. no. 13655

Design report* certified by S.L. Adams III (when applicable) P.E. State NC Reg. no. 4187

CERTIFICATE OF SHOP COMPLIANCE

We certify that the statements made in this report are correct and that this (these) Parts conforms to the rules of construction of the ASME Code, Section III.

NPT Certificate of Authorization No. N-1563 Expires 11/26/91

Date 9/18/90 Name Edward Valves, Inc. (NPT Certificate Holder) Signed R L Creech (Authorized Representative)

CERTIFICATE OF SHOP INSPECTION

I, the undersigned, holding a valid commission issued by the National Board of Boiler and Pressure Vessel Inspectors and the State or Province of North Carolina and employed by The Hartford Steam Boiler Inspection & Insurance Company of Hartford, CT have inspected these items described in this Data Report on 9-18-90, and state that to the best of my knowledge and belief, the Certificate Holder has fabricated these parts or appurtenances in accordance with the ASME Code, Section III. Each part listed has been authorized for stamping on the date shown above.

By signing this certificate, neither the inspector nor his employer makes any warranty, expressed or implied, concerning the equipment described in this Data Report. Furthermore, neither the inspector nor his employer shall be liable in any manner for any personal injury or property damage or loss of any kind arising from or connected with this inspection.

Date 9-18-90 Signed [signature] (Authorized Inspector) Commissions NC1083 (Nat'l. Bd. (incl. endorsements) state or prov. and no.)

VERIFIED & ACCEPTED [signature] REC. INSPECTOR
LEVEL II DATE 11-8 90

PLAN No 2-1908

ENERGY NORTHWEST
People·Vision·Solutions

FORM NIS-2 OWNER'S REPORT FOR REPAIRS OR REPLACEMENTS
As Required By The Provisions Of The ASME Code Section XI

1. Owner: Energy Northwest
Address: Columbia Generating Station, North Power Plant Loop, Richland, Washington, 99352
2. Plant: Columbia Generating Station
Address: Columbia Generating Station, North Power Plant Loop, Richland, Washington, 99352

Date: 08/20/04
Sheet: 1 Of 1
Unit: Not Applicable

3. (a) Work Performed By: Energy Northwest
(b) Repair Organization P.O. No, Job No, etc.: Energy Northwest
(c) Type Code Symbol Stamp: Not Applicable
(d) Certificate Of Authorization No.: Not Applicable
(e) Expiration Date: Not Applicable
4. Identification Of System: Main Steam (MS) System
5. (a) Applicable Construction Code: ASME Section III, Code Class 1, 1971 Edition with Winter 1971 Addenda, Code Case: None
(b) Applicable Edition Of ASME Section XI Utilized For Repairs Or Replacements: 1989 Edition with no Addenda, Code Case: None
6. Identification Of Components Repaired Or Replaced And Replacement Components

Name Of Component	Name Of Manufacturer	Manufacturer's Serial No	National Board No	Other I.D.	Year Built	Repaired, Replaced Or Replacement	ASME Code Stamped (Yes Or No) Code Class
MS-V-28D	Rockwell	JT-78	71	N/A	1973	----------	Yes, Code Class 1
Pilot disc	Rockwell	6033641-152	N/A	N/A	1989	Replaced	Yes, Code Class 1
Pilot disc	Rockwell	215585-37	N/A	N/A	1990	Replacement	Yes, Code Class 1
Main disc	Rockwell	6053657-153	N/A	N/A	1989	Replaced	Yes, Code Class 1
Main disc	Rockwell	81292-3	N/A	N/A	2004	Replacement	Yes, Code Class 1

7. Description Of Work Performed: Replaced existing parts for valve MS-V-28D, Serial No JT-78. The replacement work was performed as follows

1) Removed existing pilot disc (stem disc) Serial No 6033641-152 from the valve.
2) Removed existing main disc (piston disc) Serial No 6053657-153 from the valve.
3) Performed VT-3 visual examinations on the exposed surfaces of the existing studs for the valve body to bonnet joint. VT-3 visual examination results acceptable.
4) Performed VT-3 visual examinations on the existing nuts for the valve body to bonnet joint. VT-3 visual examination results acceptable.
5) Performed VT-1 visual examination on replacement studs for the valve body to bonnet joint for ISI (PSI). VT-1 visual examination results acceptable.
6) Performed VT-1 visual examination on replacement nuts for the valve body to bonnet joint for ISI (PSI). VT-1 visual examination results acceptable.
7) Installed replacement pilot disc (stem disc) Serial No 215585-37 in the valve.
8) Installed replacement main disc (piston disc) Serial No 81292-3 in the valve.
9) Reinstalled VT-3 visually examined existing studs for the valve body to bonnet joint.
10) Reinstalled VT-3 visually examined existing nuts for the valve body to bonnet joint.
11) Installed two (2) VT-1 visually examined replacement studs for the valve body to bonnet joint.
12) Installed one (1) VT-1 visually examined replacement nut for the valve body to bonnet joint.
13) Performed VT-2 visual examination during pressure test to confirm pressure boundary integrity of the joint. No evidence of leakage during the pressure test.

NOTES -

1) Pilot disc (stem disc) Serial No 215585-37 and main disc (piston disc) Serial No 81292-3 were assembled in accordance with ASME Section XI Plan No 2-1907
2) See ASME Section XI Plan No 2-1900 for additional work performed on valve MS-V-28D.
3) Rockwell International/Edward Valves, Inc parts are now being manufactured by Flowserve.

PLAN No 2-1908

ENERGY NORTHWEST
People·Vision·Solutions

FORM NIS-2 OWNER'S REPORT FOR REPAIRS OR REPLACEMENTS (Back)

8 Tests Conducted: Hydrostatic [ ] **Pneumatic** [ ] **Nominal Operating Pressure** [X] **Other** [ ]

Test Pressure: 931 Psig **Test Temperature:** 527.7° F

Component Design Pressure: 1250 Psig **Temperature:** 575° F

9. Remarks: See attached N-2 Code Data Reports for the following replacement parts:

Part Description	Serial No
Pilot disc (stem disc)	215585-37
Main disc (piston disc)	81292-3

CERTIFICATE OF COMPLIANCE

We certify that the statements made in this Owner's Report are correct and this replacement ***conforms to the rules of the ASME Code, Section XI.***

Type Code Symbol Stamp: Not Applicable

Certificate Of Authorization No.: Not Applicable

Expiration Date: Not Applicable

Prepared By Kuldip Singh - Program Lead Engineer (PLE) ***Signed By*** Kuldip Singh - Program Lead Engineer (PLE)

Date 8/20/04 ***Date*** 8/20/04

CERTIFICATE OF INSERVICE INSPECTION

I, the undersigned, holding a valid commission issued by the National Board of Boiler and Pressure Vessel Inspectors and the State of Washington ***and employed by*** Hartford Steam Boiler Of Connecticut of Hartford, Connecticut ***have inspected the components described in this Owner's Report during the period*** 8/10/04 ***to*** 8/25/04 ***and state to the best of my knowledge and belief, the Owner has performed examinations and taken corrective measures described in this Owner's Report in accordance with the requirements of the ASME Code, Section XI.***

By signing this certificate neither the Inspector nor his employer makes any warranty, expressed or implied, concerning the examinations and corrective measures described in this Owner's Report. Furthermore, neither the Inspector nor his employer shall be liable in any manner for any personal injury or property damage or a loss of any kind arising from or connected with this inspection.

Inspector's Signature ***Commissions*** 7486W IN NS
National Board, State, and Endorsements

Date 8/25/04

PLAN NO. 2-1908

SATISFACTORY ✓ UNSATISFACTORY ____

RECEIPT INSPECTOR / LEVEL / DATE 8.9.04

FORM N-2 CERTIFICATE HOLDERS' DATA REPORT FOR IDENTICAL NUCLEAR PARTS AND APPURTENANCES*

As Required by the Provisions of the ASME Code, Section III
Not to Exceed One Day's Production

1. Manufactured and certified by Flowserve Corporation, 1900 S. Saunders St., Raleigh, NC 27603 (name and address of NPT Certificate Holder)
2. Manufactured for Energy Northwest, P. O. Box 968, Richland, WA 99352 (name and address of purchaser)
3. Location of Installation Energy Northwest, Columbia Generating Station, N. Powerplant Loop, Richland, WA (name and address)
4. Type PD-422885, R/E* (drawing no.) SA105 (mat'l. spec. no.) N/A (tensile strength) N/A (CRN) 2004 (year built)
5. ASME Code, Section III, Division 1: 1971 (edition) Winter, 1971 (addenda date) 1 (class) N/A (Code Case no.)
6. Fabricated in accordance with Const. Spec. (Div. 2 only) N/A (no.) Revision N/A Date N/A
7. Remarks: Disk-Piston assembly for 26" 1612JMMNTY Valve
   Disk material meets ASME Section II, 1974 Edition
   * Sheet 3B. Sheet 1, R/U S. O. 29257
8. Nom. thickness (in.) N/A Min. design thickness (in.) Per #4 Dia. ID (ft & in.) N/A Length overall (ft & in.) N/A
9. When applicable, Certificate Holders' Data Reports are attached for each item of this report:

Part or Appurtenance Serial Number	National Board No. in Numerical Order	Part or Appurtenance Serial Number	National Board No. in Numerical Order
(1) 81292-3	N/A	(26)	
(2)		(27)	
(3)		(28)	
(4)		(29)	
(5)		(30)	
(6)		(31)	
(7) MS-V-28D, MAIN		(32)	
(8)		(33)	
(9) DISC S/N 81292-3		(34)	
(10)		(35)	
(11)		(36)	
(12)		(37)	
(13)		(38)	
(14)		(39)	
(15)	8/20/04	(40)	
(16)		(41)	
(17)		(42)	
(18)		(43)	
(19)		(44)	
(20)		(45)	
(21)		(46)	
(22)		(47)	
(23)		(48)	
(24)		(49)	
(25)		(50)	

10. Design pressure 1250 psi. Temp. 575 °F. Hydro. test pressure N/A (when applicable) at temp. °F

* Supplemental information in the form of lists, sketches, or drawings may be used provided (1) size is 8½ x 11, (2) information in items 2 and 3 on this Data Report is included on each sheet, (3) each sheet is numbered and the number of sheets is recorded at the top of this form.

(7/98) This form (E00040) may be obtained from the Order Dept., ASME, 22 Law Drive, Box 2300, Fairfield, NJ 07007-2300.

3

SATISFACTORY ✓ UNSATISFACTORY ____

[illegible] II 8-9-04

RECEIPT INSPECTOR / LEVEL / DATE

FORM N-2 (Back — Pg 2 of 2)

Certificate Holder's Serial Nos. 81292-3 through —

CERTIFICATION OF DESIGN

Design specifications certified by Boyd Brooks (when applicable) P.E. State CA Reg. no. 13655

Design report* certified by S. L. Adams (when applicable) P.E. State NC Reg. no. 4187

CERTIFICATE OF COMPLIANCE

We certify that the statements made in this report are correct and that this (these) Part(s) conforms to the rules of construction of the ASME Code, Section III, Division 1.

NPT Certificate of Authorization No. N-1563 Expires November 26, 2006

Date 8/8/04 Name Flowserve Corporation (NPT Certificate Holder) Signed [illegible] (authorized representative)

CERTIFICATE OF INSPECTION

I, the undersigned, holding a valid commission issued by the National Board of Boiler and Pressure Vessel Inspectors and the State or Province of NC and employed by HSB CT of Hartford, CT have inspected these items described in this Data Report on 8-8-04, and state that to the best of my knowledge and belief, the Certificate Holder has fabricated these parts or appurtenances in accordance with the ASME Code, Section III, Division 1. Each part listed has been authorized for stamping on the date shown above.

By signing this certificate, neither the inspector nor his employer makes any warranty, expressed or implied, concerning the equipment described in this Data Report. Furthermore, neither the inspector nor his employer shall be liable in any manner for any personal injury or property damage or loss of any kind arising from or connected with this inspection.

Date 8-8-04 Signed [illegible] (Authorized Nuclear Inspector) Commissions NC 1527 (Nat'l. Bd. (incl. endorsements) and state or prov. and no.)

4

PLAN No. 2-1908

FORM N-2 CERTIFICATE HOLDERS' DATA REPORT FOR IDENTICAL NUCLEAR PARTS AND APPURTENANCES*

As Required by the Provisions of the ASME Code, Section III
Not To Exceed One Day's Production

Pg. 1 of 1

1. Manufactured and certified by Edward Valves, Inc., 1900 S. Saunders St., Raleigh, NC 27603 (name and address of NPT Certificate Holder)
2. Manufactured for Washington Public Power Supply System, Richland, Washington 99352 (name and address of purchaser)
3. Location of installation Hanford II, Richland, Washington 99352 (name and address)
4. Type PD422885 R/T (drawing no.) SA105 (mat'l. spec. no.) N/A (tensile strength) N/A (CRN) 1990 (year built)
5. ASME Code, Section III: 1971 (edition) Winter 1971 (addenda date) 1 (class) N/A (Code Case no.)
6. Fabricated in accordance with Const. Spec. (Div. 2 only) N/A (no.) Revision N/A Date N/A
7. Remarks: Three (3) stem disk/stem assemblies for size 26 figure 1612 JMANTY flite-flow balanced stop valve (Ref. S.O. E36-14487)
8. Nom. thickness (in.) N/A Min. design thickness (in.) Per #4 Dia. ID (ft & in.) N/A Length overall (ft & in.) N/A
9. When applicable, Certificate Holders' Data Reports are attached for each item of this report:

Part or Appurtenance Serial Number	National Board No. in Numerical Order	Part or Appurtenance Serial Number	National Board Number in Numerical Order
(1) 215585-35		(26)	
(2) 215585-36		(27)	
(3) 215585-37		(28)	
(4)		(29)	
(5)		(30)	
(6)		(31)	
(7)		(32)	
(8) MS-V-28D PILOT		(33)	
(9)		(34)	
(10) DISC S/N: 215585-37		(35)	
(11)		(36)	
(12)		(37)	
(13)		(38)	
(14)		(39)	
(15)	8/20/04	(40)	
(16)		(41)	
(17)		(42)	
(18)		(43)	
(19)		(44)	
(20)		(45)	
(21)		(46)	
(22)		(47)	
(23)		(48)	
(24)		(49)	
(25)		(50)	

10. Design pressure 1250 psi. Temp. 575 °F. Hydro. test pressure N/A (when applicable) at temp. °F

*Supplemental information in the form of lists, sketches, or drawings may be used provided (1) size is 8½ × 11, (2) information in items 2 and 3 on this Data Report is included on each sheet, (3) each sheet is numbered and the number of sheets is recorded at the top of this form.

(12/86) This form (E00040) may be obtained from the Order Dept., ASME, 22 Law Drive, Box 2300, Fairfield, NJ 07007-2300.

2

2 4 0 9 0 3 5

FORM N-2 (back)

Mfr. Serial No. 215585-35363

CERTIFICATION OF DESIGN

Design specifications certified by Boyd Brooks (when applicable) P.E. State CA Reg. no. 13655

Design report* certified by S.L. Adams III (when applicable) P.E. State NC Reg. no. 4187

CERTIFICATE OF SHOP COMPLIANCE

We certify that the statements made in this report are correct and that this (these) Parts conforms to the rules of construction of the ASME Code, Section III.

NPT Certificate of Authorization No. N-1563 Expires 11/26/91

Date 9/18/90 Name Edward Valves, Inc. (NPT Certificate Holder) Signed [signature] (authorized representative)

CERTIFICATE OF SHOP INSPECTION

I, the undersigned, holding a valid commission issued by the National Board of Boiler and Pressure Vessel Inspectors and the State or Province of North Carolina and employed by The Hartford Steam Boiler Inspection & Insurance Company of Hartford, CT have inspected these items described in this Data Report on 9-18-90, and state that to the best of my knowledge and belief, the Certificate Holder has fabricated these parts or appurtenances in accordance with the ASME Code, Section III. Each part listed has been authorized for stamping on the date shown above.

By signing this certificate, neither the inspector nor his employer makes any warranty, expressed or implied, concerning the equipment described in this Data Report. Furthermore, neither the inspector nor his employer shall be liable in any manner for any personal injury or property damage or loss of any kind arising from or connected with this inspection.

Date 9-18-90 Signed [signature] (Authorized Inspector) Commissions NC1083 (Nat'l. Bd. incl. endorsements; state or prov. and no.)

VERIFIED & ACCEPTED [signature] REC. INSPECTOR

LEVEL II DATE 11-8 90

PLAN No 2-1909

ENERGY NORTHWEST
People·Vision·Solutions

FORM NIS-2 OWNER'S REPORT FOR REPAIRS OR REPLACEMENTS
As Required By The Provisions Of The ASME Code Section XI

Date: 07/14/05
Sheet: 1 Of 1
Unit: Not Applicable

1. Owner: Energy Northwest
Address: Columbia Generating Station, North Power Plant Loop, Richland, Washington, 99352
2. Plant: Columbia Generating Station
Address: Columbia Generating Station, North Power Plant Loop, Richland, Washington, 99352
3. (a) Work Performed By: Energy Northwest
(b) Repair Organization P.O. No, Job No, etc.: Energy Northwest
(c) Type Code Symbol Stamp: Not Applicable
(d) Certificate Of Authorization No.: Not Applicable
(e) Expiration Date: Not Applicable
4. Identification Of System: Process Instrumentation (PI) Tubing
5. (a) Applicable Construction Code: ASME Section III, Code Class 2, 1974 Edition with Winter 1975 Addenda, Code Case: None
(b) Applicable Edition Of ASME Section XI Utilized For Repairs Or Replacements: 1989 Edition with no Addenda, Code Case: None
6. Identification Of Components Repaired Or Replaced And Replacement Components

Name Of Component	Name Of Manufacturer	Manufacturer's Serial No	National Board No	Other I.D.	Year Built	Repaired, Replaced Or Replacement	ASME Code Stamped (Yes Or No) Code Class
PI(1)-ST-IR-82-3	JCI	PI(1)-ST-IR-82-3	N/A	N/A	1983	----------	Yes, Code Class 2
Valve	Dragon	GP1332	N/A	N/A	1981	Replaced	Yes, Code Class 2
Valve	Dragon	PB1400	N/A	N/A	2003	Replacement	Yes, Code Class 2

7. Description Of Work Performed: Replaced existing valve IR-V-IR-82/V3* associated with instrument MS-PS-3B. The replacement work was performed as follows:

1) Removed existing valve IR-V-IR-82/V3*, Serial No GP1332.
2) Removed tubing material associated with valve IR-V-IR-82/V3*.
3) Installed new replacement valve IR-V-IR-82/V3*, Serial No PB1400.
4) Installed replacement tubing material.
5) Made required socket welds.
6) Performed visual examination on the final socket welds. Visual examination results acceptable.
7) Performed liquid penetrant (PT) examination on the final socket welds. Liquid penetrant (PT) examination results acceptable.

NOTES -

1) The existing ASME Code Stamped Process Instrumentation (PI) Tubing in which the new replacement valve IR-V-IR-82/V3*, Serial No PB1400 was installed is PI(1)-ST-IR-82-3. This process instrumentation tubing is certified to comply with ASME Section III, Code Class 2, 1974 Edition with Winter 1975 Addenda requirements.
2) The new replacement valve IR-V-IR-82/V3*, Serial No PB1400 is certified to comply with ASME Section III, Code Class 2, 1974 Edition with Summer 1975 Addenda requirements.
3) * This valve has two (2) EPN's. Valve EPN No IR-V-IR-82/V3* appears on PASSPORT and valve EPN No IR-82-V-3B appears on Dwg No D-220-15.0-PED-I-0563, CVI No 220-01,1248.

PLAN No 2-1909

ENERGY NORTHWEST
People·Vision·Solutions

FORM NIS-2 OWNER'S REPORT FOR REPAIRS OR REPLACEMENTS (Back)

8 Tests Conducted: Hydrostatic [ ] *Pneumatic* [ ] *Nominal Operating Pressure* [ ] *None* [X]

Test Pressure: Psig *Test Temperature:* °F

Component Design Pressure: Psig *Temperature:* °F

9. Remarks (Applicable Manufacturer's Data Reports to be attached): See attached NPV-1 Code Data Report for the replacement valve IR-V-IR-82/V3*, Serial No PB1400.

CERTIFICATE OF COMPLIANCE

We certify that the statements made in this Owner's Report are correct and this replacement *conforms to the rules of the ASME Code, Section XI.*

Type Code Symbol Stamp: Not Applicable

Certificate Of Authorization No.: Not Applicable

Expiration Date: Not Applicable

Prepared By Kuldip Singh - Program Lead Engineer (PLE) *Signed By* Kuldip Singh - Program Lead Engineer (PLE)

Date 7/14/05 *Date* 7/14/05.

CERTIFICATE OF INSERVICE INSPECTION

I, the undersigned, holding a valid commission issued by the National Board of Boiler and Pressure Vessel Inspectors and the State of _____ *and employed by* _____ _____ *have inspected the components described in this Owner's Report during the period* _____ *to* _____ *and state to the best of my knowledge and belief, the Owner has performed examinations and taken corrective measures described in this Owner's Report in accordance with the requirements of the ASME Code, Section XI.*

By signing this certificate neither the Inspector nor his employer makes any warranty, expressed or implied, concerning the examinations and corrective measures described in this Owner's Report. Furthermore, neither the Inspector nor his employer shall be liable in any manner for any personal injury or property damage or a loss of any kind arising from or connected with this inspection.

Not Required - Replacement 1" NPS And Smaller *Commissions* _____

Inspector's Signature National Board, State, and Endorsements

Date _____

PLAN NO. 2-1904

FORM NPV-1 N CERTIFICATE HOLDERS' DATA REPORT FOR NUCLEAR PUMPS OR VALVES*

As Required by the Provisions of the ASME Code, Section III, Div. 1

1. Manufactured by Dragon Valves, Inc., 13457 Excelsior Dr., Norwalk, CA. 90650 7/13/05
(Name and Address of N Certificate Holder)
2. Manufactured for Energy Northwest, P.O. Box 968, Richland, WA. 99352-0968
(Name and Address of Purchaser or Owner)
3. Location of Installation Energy Northwest, Columbia Generating Station, Richland, WA. 99352
(Name and Address)
4. Pump or Valve Valve. Nominal Inlet Size 1/2 (inch) Outlet Size 1/2 (inch)

	(a) Model No., Series No. or Type	(b) N Certificate Holder's Serial No.	(c) Canadian Registration No.	(d) Drawing No.	(e) Class	(f) Nat'l. Bd. No.	(g) Year Built
(1)	7N058SWD	PB1398	N/A	10580	2	N/A	2003
(2)		Thru		Rev. C			
(3)		PB1410					
(4)							
(5)							
(6)							
(7)	1R-V-1R82V3 (1R-82-V-3B), S/N PB1400						
(8)							
(9)							
(10)							

5. Instrument Valve (13 Pcs.)
(Brief description of service for which equipment was designed)

6. Design Conditions _____ (Pressure) psi _____ (Temperature) °F or Valve Pressure Class 1500 (1)
7. Cold Working Pressure 3600 psi at 100°F.
8. Pressure Retaining Pieces

Mark No.	Material Spec. No.	Manufacturer	Remarks
(a) Castings N/A			
(b) Forgings			
HT. 4234H	ASME SA182 Gr. F316	Ajax Forge Co.	Body
HT. A19167	ASME SA182 GR. F316	Ajax Forge Co.	Bonnet Yoke

(1) For manually operated valves only.

* Supplemental sheets in form of lists, sketches or drawings may be used provided (1) size is 8-1/2" x 11", (2) information in items 1, 2 and 5 on this Data Report is included on each sheet, and (3) each sheet is numbered and number of sheets is recorded at top of this form.

FORM NPV-1 (Back)

Mark No.	Material Spec. No.	Manufacturer	Remarks
(c) Bolting N/A			
(d) Other Parts			
HT. 712678	ASME SA564 GR. 630	Carpenter Tech. Corp.	Disc

9. Hydrostatic test 5400 psi. Disk Differential test pressure 3600 psi.

CERTIFICATE OF COMPLIANCE

We certify that the statements made in this report are correct and that this pump, or valve, conforms to the rules of construction of the ASME Code for Nuclear Power Plant Components. Section III, Div. I., Edition 1974, Addenda S'75 (Date), Code Case No. N/A. Date February 25, 2003

Signed Dragon Valves, Inc. (N Certificate Holder) by Mark A. Snyder

Our ASME Certificate of Authorization No. N-1033 to use the N (N) symbol expires 5/6/05 (Date).

CERTIFICATION OF DESIGN

Design information on file at Energy Northwest

Stress analysis report (Class 1 only) on file at N/A

Design specifications certified by (1) Abbas A. Mostala

PE State WA. Reg. No. 28777

Stress analysis certified by (1) N/A

PE State _____ Reg. No. _____

(1) Signature not required. List name only.

CERTIFICATE OF SHOP INSPECTION

I, the undersigned, holding a valid commission issued by the National Board of Boiler and Pressure Vessel Inspectors and the State or Province of CALIFORNIA and employed by HSB CT of HARTFORD, CT. have inspected the pump, or valve, described in this Data Report on 2-25 to 03, and state that to the best of my knowledge and belief, the N Certificate Holder has constructed this pump, or valve, in accordance with the ASME Code, Section III.

By signing this certificate, neither the Inspector nor his employer makes any warranty, expressed or implied, concerning the equipment described in this Data Report. Furthermore, neither the Inspector nor his employer shall be liable in any manner for any personal injury or property damage or a loss of any kind arising from or connected with this inspection.

Date 2-25 to 03.

E. O. [signature] (Inspector) Commissions NB 12050-N / CA-1969 (Nat'l Bd., State, Prov. and No.)

PLAN No 2-1910

ENERGY NORTHWEST
People·Vision·Solutions

FORM NIS-2 OWNER'S REPORT FOR REPAIRS OR REPLACEMENTS
As Required By The Provisions Of The ASME Code Section XI

Date: 08/20/04
Sheet: 1 Of 1
Unit: Not Applicable

1. **Owner:** Energy Northwest
   Address: Columbia Generating Station, North Power Plant Loop, Richland, Washington, 99352
2. **Plant:** Columbia Generating Station
   Address: Columbia Generating Station, North Power Plant Loop, Richland, Washington, 99352
3. **(a) Work Performed By:** Energy Northwest
   (b) Repair Organization P.O. No, Job No, etc.: Energy Northwest
   (c) Type Code Symbol Stamp: Not Applicable
   (d) Certificate Of Authorization No.: Not Applicable
   (e) Expiration Date: Not Applicable
4. **Identification Of System:** Containment Equipment Hatch X-15 (C-X-15)
5. **(a) Applicable Construction Code:** ASME Section III, Code Class MC, 1971 Edition with Summer 1972 Addenda, Code Case: None
   (b) Applicable Edition Of ASME Section XI Utilized For Repairs Or Replacements: 1992 Edition with 1992 Addenda, Code Case: None
6. **Identification Of Components Repaired Or Replaced And Replacement Components**

Name Of Component	Name Of Manufacturer	Manufacturer's Serial No	National Board No	Other I.D.	Year Built	Repaired, Replaced Or Replacement	ASME Code Stamped (Yes Or No) Code Class
Containment Equipment Hatch X-15 (C-X-15)	PDM	12764	790	N/A	1976	----------	Yes, Code Class MC

7. **Description Of Work Performed:** Replaced one (1) nut for the Containment Equipment Hatch X-15 (C-X-15). The replacement work was performed as follows:
   1) Performed VT-1 visual examination on one (1) replacement nut for ISI (PSI). VT-1 visual examination results acceptable.
   2) Installed replacement nut at hole location 26.
   3) Performed VT-2 visual examination during pressure test to confirm pressure boundary integrity of the joints. No evidence of leakage during the pressure test.

PLAN No 2-1910

ENERGY NORTHWEST
People·Vision·Solutions

FORM NIS-2 OWNER'S REPORT FOR REPAIRS OR REPLACEMENTS (Back)

8 Tests Conducted: Hydrostatic ☐ **Pneumatic** ☐ **Nominal Operating Pressure** ☐ **Other** ☒ *

Test Pressure: 38.78 Psig **Test Temperature:** 85° F
Component Design Pressure: 45 Psig **Temperature:** 340° F

9. Remarks: * VT-2 visual examination to confirm pressure boundary integrity of the Containment Equipment Hatch X-15 (C-X-15) was performed during 10CFR50, Appendix J Local Leak Rate Test (LLRT).

CERTIFICATE OF COMPLIANCE

We certify that the statements made in this Owner's Report are correct and this replacement *conforms to the rules of the ASME Code, Section XI.*
Type Code Symbol Stamp: Not Applicable
Certificate Of Authorization No.: Not Applicable
Expiration Date: Not Applicable

Prepared By Kuldip Singh - Program Lead Engineer (PLE) **Signed By** Kuldip Singh - Program Lead Engineer (PLE)

Date 8/20/04 **Date** 8/20/04

CERTIFICATE OF INSERVICE INSPECTION

I, the undersigned, holding a valid commission issued by the National Board of Boiler and Pressure Vessel Inspectors and the State of Washington *and employed by* Hartford Steam Boiler Of Connecticut of Hartford, Connecticut *have inspected the components described in this Owner's Report during the period* 8/13/04 *to* 8/24/04 *and state to the best of my knowledge and belief, the Owner has performed examinations and taken corrective measures described in this Owner's Report in accordance with the requirements of the ASME Code, Section XI.*
By signing this certificate neither the Inspector nor his employer makes any warranty, expressed or implied, concerning the examinations and corrective measures described in this Owner's Report. Furthermore, neither the Inspector nor his employer shall be liable in any manner for any personal injury or property damage or a loss of any kind arising from or connected with this inspection.

Inspector's Signature **Commissions** 748610 WI AS
National Board, State, and Endorsements

Date 8/24/04

PLAN No 2-1911

ENERGY NORTHWEST
People·Vision·Solutions

FORM NIS-2 OWNER'S REPORT FOR REPAIRS OR REPLACEMENTS
As Required By The Provisions Of The ASME Code Section XI

Date: 07/07/05
Sheet: 1 Of 1
Unit: Not Applicable

1. **Owner:** Energy Northwest
   Address: Columbia Generating Station, North Power Plant Loop, Richland, Washington, 99352
2. **Plant:** Columbia Generating Station
   Address: Columbia Generating Station, North Power Plant Loop, Richland, Washington, 99352
3. **(a) Work Performed By:** Energy Northwest
   (b) Repair Organization P.O. No, Job No, etc.: Energy Northwest
   (c) Type Code Symbol Stamp: Not Applicable
   (d) Certificate Of Authorization No.: Not Applicable
   (e) Expiration Date: Not Applicable
4. **Identification Of System:** Residual Heat Removal (RHR) System
5. **(a) Applicable Construction Code:** ASME Section III, Code Class 2, 1971 Edition with Winter 1973 Addenda, Code Case: None
   (b) Applicable Edition Of ASME Section XI Utilized For Repairs Or Replacements: 1989 Edition with no Addenda, Code Case: None
6. **Identification Of Components Repaired Or Replaced And Replacement Components**

Name Of Component	Name Of Manufacturer	Manufacturer's Serial No	National Board No	Other I.D.	Year Built	Repaired, Replaced Or Replacement	ASME Code Stamped (Yes Or No) Code Class
RHR(1)-2A	WPPSS*	RHR(1)-2A-P1	N/A	N/A	1983	----------	Yes, Code Class 2
RHR(4)-1A	WPPSS*	RHR(4)-1A-P1	N/A	N/A	1983	----------	Yes, Code Class 2

7. **Description Of Work Performed:** Replaced studs and nuts for the inlet and outlet bolted flanged joints associated with relief valve RHR-RV-1A. The replacement work was performed as follows:

Relief Valve Inlet Bolted Flanged Joint

1) Removed existing studs for the relief valve inlet bolted flanged joint.
2) Removed existing nuts for the relief valve inlet bolted flanged joint.
3) Installed four (4) new studs for the relief valve inlet bolted flanged joint.
4) Installed eight (8) new nuts for the relief valve inlet bolted flanged joint.

Relief Valve Outlet Bolted Flanged Joint

1) Removed existing studs for the relief valve outlet bolted flanged joint.
2) Removed existing nuts for the relief valve outlet bolted flanged joint.
3) Installed four (4) new studs for the relief valve outlet bolted flanged joint.
4) Installed eight (8) new nuts for the relief valve outlet bolted flanged joint.

NOTES -

1) * Company name changed from Washington Public Power Supply System (WPPSS) to Energy Northwest (EN) in 1999.

PLAN No 2-1911

ENERGY NORTHWEST
People·Vision·Solutions

FORM NIS-2 OWNER'S REPORT FOR REPAIRS OR REPLACEMENTS (Back)

8 Tests Conducted: Hydrostatic [ ] Pneumatic [ ] Nominal Operating Pressure [ ] None [X]
Test Pressure: Psig Test Temperature: °F
Component Design Pressure: Psig Temperature: °F

9. Remarks (Applicable Manufacturer's Data Reports to be attached): None

CERTIFICATE OF COMPLIANCE

We certify that the statements made in this Owner's Report are correct and this replacement conforms to the rules of the ASME Code, Section XI.
Type Code Symbol Stamp: Not Applicable
Certificate Of Authorization No.: Not Applicable
Expiration Date: Not Applicable

Prepared By Kuldip Singh - Program Lead Engineer (PLE) Signed By Kuldip Singh - Program Lead Engineer (PLE)

Date 7/7/05 Date 7/7/05

CERTIFICATE OF INSERVICE INSPECTION

I, the undersigned, holding a valid commission issued by the National Board of Boiler and Pressure Vessel Inspectors and the State of Washington and employed by Hartford Steam Boiler Of Connecticut of Hartford, Connecticut have inspected the components described in this Owner's Report during the period 1-11-2005 to 7-11-2005 and state to the best of my knowledge and belief, the Owner has performed examinations and taken corrective measures described in this Owner's Report in accordance with the requirements of the ASME Code, Section XI.
By signing this certificate neither the Inspector nor his employer makes any warranty, expressed or implied, concerning the examinations and corrective measures described in this Owner's Report. Furthermore, neither the Inspector nor his employer shall be liable in any manner for any personal injury or property damage or a loss of any kind arising from or connected with this inspection.

Inspector's Signature Commissions 10105SW A, B, N, I
National Board, State, and Endorsements

Date 7-11-2005

PLAN No 2-1912

ENERGY NORTHWEST
People·Vision·Solutions

FORM NIS-2 OWNER'S REPORT FOR REPAIRS OR REPLACEMENTS
As Required By The Provisions Of The ASME Code Section XI

Date: 07/07/05
Sheet: 1 Of 1
Unit: Not Applicable

1. Owner: Energy Northwest
Address: Columbia Generating Station, North Power Plant Loop, Richland, Washington, 99352
2. Plant: Columbia Generating Station
Address: Columbia Generating Station, North Power Plant Loop, Richland, Washington, 99352
3. (a) Work Performed By: Energy Northwest
(b) Repair Organization P.O. No, Job No, etc.: Energy Northwest
(c) Type Code Symbol Stamp: Not Applicable
(d) Certificate Of Authorization No.: Not Applicable
(e) Expiration Date: Not Applicable
4. Identification Of System: Residual Heat Removal (RHR) System
5. (a) Applicable Construction Code: ASME Section III, Code Class 2, 1971 Edition with Winter 1973 Addenda, Code Case: None
(b) Applicable Edition Of ASME Section XI Utilized For Repairs Or Replacements: 1989 Edition with no Addenda, Code Case: None
6. Identification Of Components Repaired Or Replaced And Replacement Components

Name Of Component	Name Of Manufacturer	Manufacturer's Serial No	National Board No	Other I.D.	Year Built	Repaired, Replaced Or Replacement	ASME Code Stamped (Yes Or No) Code Class
RHR(4)-1C	WPPSS*	RHR(4)-1C-P1	N/A	N/A	1983	----------	Yes, Code Class 2

7. Description Of Work Performed: Replaced studs and nuts for the outlet bolted flanged joint associated with relief valve RHR-RV-88C. The replacement work was performed as follows:

1) Removed existing studs for the relief valve outlet bolted flanged joint.
2) Removed existing nuts for the relief valve outlet bolted flanged joint.
3) Installed four (4) new studs for the relief valve outlet bolted flanged joint.
4) Installed four (4) new nuts for the relief valve outlet bolted flanged joint.
5) Reinstalled (reused) four (4) for the relief valve outlet bolted flanged joint.

NOTES -

1) * Company name changed from Washington Public Power Supply System (WPPSS) to Energy Northwest (EN) in 1999.

PLAN No 2-1912

ENERGY NORTHWEST
People·Vision·Solutions

FORM NIS-2 OWNER'S REPORT FOR REPAIRS OR REPLACEMENTS (Back)

8 Tests Conducted: Hydrostatic [ ] Pneumatic [ ] Nominal Operating Pressure [ ] None [X]

Test Pressure: Psig — Test Temperature: °F

Component Design Pressure: Psig — Temperature: °F

9. Remarks (Applicable Manufacturer's Data Reports to be attached): None

CERTIFICATE OF COMPLIANCE

We certify that the statements made in this Owner's Report are correct and this replacement conforms to the rules of the ASME Code, Section XI.

Type Code Symbol Stamp: Not Applicable

Certificate Of Authorization No.: Not Applicable

Expiration Date: Not Applicable

Prepared By Kuldip Singh — Kuldip Singh - Program Lead Engineer (PLE)

Signed By Kuldip Singh — Kuldip Singh - Program Lead Engineer (PLE)

Date 7/7/05 — Date 7/7/05

CERTIFICATE OF INSERVICE INSPECTION

I, the undersigned, holding a valid commission issued by the National Board of Boiler and Pressure Vessel Inspectors and the State of Washington and employed by Hartford Steam Boiler Of Connecticut of Hartford, Connecticut have inspected the components described in this Owner's Report during the period 1-11-2005 to 7-11-2005 and state to the best of my knowledge and belief, the Owner has performed examinations and taken corrective measures described in this Owner's Report in accordance with the requirements of the ASME Code, Section XI.

By signing this certificate neither the Inspector nor his employer makes any warranty, expressed or implied, concerning the examinations and corrective measures described in this Owner's Report. Furthermore, neither the Inspector nor his employer shall be liable in any manner for any personal injury or property damage or a loss of any kind arising from or connected with this inspection.

Inspector's Signature — Commissions 10655W A, B, N, I (National Board, State, and Endorsements)

Date 7-11-2005

PLAN No 2-1913

ENERGY NORTHWEST
People·Vision·Solutions

FORM NIS-2 OWNER'S REPORT FOR REPAIRS OR REPLACEMENTS
As Required By The Provisions Of The ASME Code Section XI

Date: 06/11/05
Sheet: 1 Of 1
Unit: Not Applicable

1. **Owner:** Energy Northwest
   Address: Columbia Generating Station, North Power Plant Loop, Richland, Washington, 99352
2. **Plant:** Columbia Generating Station
   Address: Columbia Generating Station, North Power Plant Loop, Richland, Washington, 99352
3. (a) **Work Performed By:** Energy Northwest
   (b) **Repair Organization P.O. No, Job No, etc.:** Energy Northwest
   (c) **Type Code Symbol Stamp:** Not Applicable
   (d) **Certificate Of Authorization No.:** Not Applicable
   (e) **Expiration Date:** Not Applicable
4. **Identification Of System:** Service Water (SW) System
5. (a) **Applicable Construction Code:** ASME Section III, Code Class 3, 1971 Edition with Winter 1973 Addenda, Code Case: None
   (b) **Applicable Edition Of ASME Section XI Utilized For Repairs Or Replacements:** 1989 Edition with no Addenda, Code Case: None
6. **Identification Of Components Repaired Or Replaced And Replacement Components**

Name Of Component	Name Of Manufacturer	Manufacturer's Serial No	National Board No	Other I.D.	Year Built	Repaired, Replaced Or Replacement	ASME Code Stamped (Yes Or No) Code Class
SW(21)-2	WPPSS *	SW(21)-2-P1	N/A	N/A	1983	----------	Yes, Code Class 3
SW-RV-001A	Crosby	N67441-00-0003	N/A	N/A	1991	Replaced	Yes, Code Class 3
SW-RV-001A	Crosby	N67441-00-0001	N/A	N/A	1983	Replacement	Yes, Code Class 3

7. **Description Of Work Performed:** Replaced existing relief valve SW-RV-001A. The replacement work was performed as follows:
   1) Removed existing relief valve SW-RV-001A, Serial No. N67441-00-0003.
   2) Installed replacement relief valve SW-RV-001A, Serial No N67441-00-0001.

NOTES -

1) * Company name changed from Washington Public Power Supply System (WPPSS) to Energy Northwest in 1999.
2) The existing ASME Code Stamped piping system in which the replacement valve SW-RV-001A, Serial No N67441-00-0001 was installed is Service Water (SW) piping system SW(21)-2-P1. This piping system is certified to comply with ASME Section III, Code Class 3, 1971 Edition with Winter 1973 Addenda requirements.
3) The replacement valve SW-RV-001A, Serial No N67441-00-0001 is certified to comply with ASME Section III, Code Class 3, 1974 Edition with Summer 1975 Addenda requirements.

PLAN No 2-1913

ENERGY NORTHWEST
People·Vision·Solutions

FORM NIS-2 OWNER'S REPORT FOR REPAIRS OR REPLACEMENTS (Back)

8 Tests Conducted: Hydrostatic [ ] *Pneumatic* [ ] *Nominal Operating Pressure* [ ] *None* [X]
Test Pressure: Psig *Test Temperature:* °F
Component Design Pressure: Psig *Temperature:* °F

9. Remarks (Applicable Manufacturer's Data Reports to be attached): See attached NV-1 Code Data Report for the replacement relief valve SW-RV-001A, Serial No N67441-00-0001.

CERTIFICATE OF COMPLIANCE

We certify that the statements made in this Owner's Report are correct and this replacement *conforms to the rules of the ASME Code, Section XI.*
Type Code Symbol Stamp: Not Applicable
Certificate Of Authorization No.: Not Applicable
Expiration Date: Not Applicable

Prepared By Kuldip Singh - Program Lead Engineer (PLE) *Signed By* Kuldip Singh - Program Lead Engineer (PLE)

Date 6/13/05 *Date* 6/13/05

CERTIFICATE OF INSERVICE INSPECTION

I, the undersigned, holding a valid commission issued by the National Board of Boiler and Pressure Vessel Inspectors and the State of Washington *and employed by* Hartford Steam Boiler Of Connecticut of Hartford, Connecticut *have inspected the components described in this Owner's Report during the period* 2/22/2005 *to* 6/21/2005 *and state to the best of my knowledge and belief, the Owner has performed examinations and taken corrective measures described in this Owner's Report in accordance with the requirements of the ASME Code, Section XI.*
By signing this certificate neither the Inspector nor his employer makes any warranty, expressed or implied, concerning the examinations and corrective measures described in this Owner's Report. Furthermore, neither the Inspector nor his employer shall be liable in any manner for any personal injury or property damage or a loss of any kind arising from or connected with this inspection.

Inspector's Signature *Commissions* 10655W A, B, N, I
National Board, State, and Endorsements

Date 6/21/2005

PLAN NO. 2-1913

CROSBY

CROSBY VALVE & GAGE COMPANY
WRENTHAM, MASS

FORM NV-1 FOR SAFETY AND SAFETY RELIEF VALVES
As required by the Provisions of the ASME Code Rules

Q.C.-44C-1

DATA REPORT
Safety and Safety Relief Valves

1. Manufactured By Crosby Valve & Gage Co., 43 Kendrick St., Wrentham, MA 02093
Name and Address

Model No. JR-WR Order No. N63949D Contract Date 8/4/83 National Board No. --

2. Manufactured For General Electric Company, 175 Curtner Ave. San Jose, CA 95125 Order No. 205-YF229
Name and Address

3. Owner Washington Public Power Supply System - Hanford 2
Name and Address

4. Location of Plant Richland, Washington 99350 SW-RV-001A
MPL No. E12B001

5. Valve Identification Hanford 2 Serial No. N67441-00-0001 Drawing No. DS-C-67441 Rev. 0

Type Relief (Safety, Safety Relief, Pilot, Power Actuated) Orifice Size SPL Inch Pipe Size -- Inch Inlet 3/4 Inch Outlet 1 Inch

6. Set Pressure (PSIG) 275 480 °F
Rated Temperature

Stamped Capacity 15 GPM Water @ 70°F & 10 % Overpressure -- Blowdown (PSIG) 10% S.P.

Hydrostatic Test (PSIG) Inlet 750 Complete Valve 225

7. The material, design, construction and workmanship comply with ASME Code, Section III.

Class 3 Edition 1974, Addenda Date Summer 1975, Case No. 1711, 1567, N242-1

Pressure Containing or Pressure Retaining Components

a. Castings	Serial No. Identification	Material Specification Including Type or Grade
Body		
~~Bonnet~~ Cylinder	N91851-31-0020	ASME SA216 Gr. WCB
b. Bar Stock and Forgings		
~~Stem~~ ~~Yoke~~ ~~Ring~~ Base	N91850-31-0010	ASME SA479 Type 316
Nozzle		
Disc	N91855-32-0028	ASME SB164 Class A
Spring Washers	N92220-31-0026 N92220-31-0039	ASME SA193 Gr. B6
Adjusting Bolt	N92221-31-0020	ASME SA193 Gr. B6
Spindle K61719-31-0014	N92219-31-0014	ASME SA193 Gr. B6

ZX00421604

MAB 8.17.83

3

	Serial No. or Identification	Material Specification Including Type or Grade
c. Spring	NX4691-0001	ASTM B166
d. Bolting		
e. Other Parts such as Pilot Components		

We certify that the statements made in this report are correct.

Date 8/12 19 83 Signed Crosby Valve & Gage Co. By [signature]
Manufacturer

Certificate of Authorization No. 1878 expires September 30, 1983

CERTIFICATE OF SHOP INSPECTION

I, the undersigned, holding a valid commission issued by the National Board of Boiler and Pressure Vessel Inspectors and the State or Province of Mass. and employed by Arkwright-Boston Manufacturers Mutual Insurance Company have inspected the equipment described in this Data Report on 8-12 19 83 and state that to the best of my knowledge and belief, the Manufacturer has constructed this equipment in accordance with the applicable Subsections of ASME Section III.

By signing this certificate, neither the Inspector nor his employer makes any warranty, expressed or implied, concerning the equipment described in this Data Report. Furthermore, neither the Inspector nor his employer shall be liable in any manner for any personal injury or property damage or a loss of any kind arising from or connected with this inspection.

Date 8-12 19 83 Factory Mutual System

[signature] Commissions Mass # 1287
(Inspector) (National Board, State, Province and No.)

ZX00421605

MAB

PLAN No. 2-1913

CROSBY

CROSBY VALVE & GAGE COMPANY
WRENTHAM, MASS

6/5/05

*Corrected Report - 2-21-84

CHECKED AND FOUND CERTIFICATION TO MEET THE REQUIREMENTS OF ASME B & PV CODE SECTIONS II AND III 1974 EDITION INCLUDING ADDENDA THRU SUMMER 1975.

MAB 2-21-84

PART: See Below
PART NUMBER: See Below
HEAT NUMBER: See Below
CUSTOMER ORDER NUMBER: 205-YF229
FACTORY ORDER NUMBER: N63949D
QAI: 32044 REV. 3

Linda Chartier 8/12/83 — N67441-00-0001

Linda Chartier - Quality Assurance Records Specialist — Valve Serial Number

PART	PART NUMBER	HEAT NUMBER
BASE	N91850-31-0010	386068
DISC	N91855-32-0028	M7127B
SPINDLE	N92219-31-0014	835273
SPRING WASHER	N92220-31-0026	G1636
" "	N92220-31-0039	"
CYLINDER	N91851-31-0020	9554A
SPRING	NX4691-0001	NX3503
*ADJUSTING BOLT dc 2-21-84	*N92221-31-0020 dc 2-21-84	*824616 dc 2-21-84

8-12-83

MAB 8-12-83

ZX00421606

4

PLAN No 2-1914

ENERGY NORTHWEST
People·Vision·Solutions

FORM NIS-2 OWNER'S REPORT FOR REPAIRS OR REPLACEMENTS
As Required By The Provisions Of The ASME Code Section XI

1. Owner: Energy Northwest
Address: Columbia Generating Station, North Power Plant Loop, Richland, Washington, 99352
2. Plant: Columbia Generating Station
Address: Columbia Generating Station, North Power Plant Loop, Richland, Washington, 99352

Date: 06/11/05
Sheet: 1 Of 1
Unit: Not Applicable

3. (a) Work Performed By: Energy Northwest
(b) Repair Organization P.O. No, Job No, etc.: Energy Northwest
(c) Type Code Symbol Stamp: Not Applicable
(d) Certificate Of Authorization No.: Not Applicable
(e) Expiration Date: Not Applicable
4. Identification Of System: Service Water (SW) System
5. (a) Applicable Construction Code: ASME Section III, Code Class 3, 1971 Edition with Winter 1973 Addenda, Code Case: None
(b) Applicable Edition Of ASME Section XI Utilized For Repairs Or Replacements: 1989 Edition with no Addenda, Code Case: None
6. Identification Of Components Repaired Or Replaced And Replacement Components

Name Of Component	Name Of Manufacturer	Manufacturer's Serial No	National Board No	Other I.D.	Year Built	Repaired, Replaced Or Replacement	ASME Code Stamped (Yes Or No) Code Class
SW(22)-2	WPPSS *	SW(22)-2-P1	N/A	N/A	1983	----------	Yes, Code Class 3
SW-RV-001B	Crosby	N67441-00-0004	N/A	N/A	1991	Replaced	Yes, Code Class 3
SW-RV-001B	Crosby	N67441-00-0002	N/A	N/A	1983	Replacement	Yes, Code Class 3

7. Description Of Work Performed: Replaced existing relief valve SW-RV-001B. The replacement work was performed as follows:
1) Removed existing relief valve SW-RV-001B, Serial No. N67441-00-0004.
2) Installed replacement relief valve SW-RV-001B, Serial No N67441-00-0002.

NOTES -
1) * Company name changed from Washington Public Power Supply System (WPPSS) to Energy Northwest in 1999.
2) The existing ASME Code Stamped piping system in which the replacement valve SW-RV-001B, Serial No N67441-00-0002 was installed is Service Water (SW) piping system SW(22)-2-P1. This piping system is certified to comply with ASME Section III, Code Class 3, 1971 Edition with Winter 1973 Addenda requirements.
3) The replacement valve SW-RV-001B, Serial No N67441-00-0002 is certified to comply with ASME Section III, Code Class 3, 1974 Edition with Summer 1975 Addenda requirements.

PLAN No 2-1914

ENERGY NORTHWEST
People·Vision·Solutions

FORM NIS-2 OWNER'S REPORT FOR REPAIRS OR REPLACEMENTS (Back)

8 Tests Conducted: Hydrostatic [ ] *Pneumatic* [ ] *Nominal Operating Pressure* [ ] *None* [X]
Test Pressure: Psig *Test Temperature:* °F
Component Design Pressure: Psig *Temperature:* °F

9. Remarks (Applicable Manufacturer's Data Reports to be attached): See attached NV-1 Code Data Report for the replacement relief valve SW-RV-001B, Serial No N67441-00-0002.

CERTIFICATE OF COMPLIANCE

We certify that the statements made in this Owner's Report are correct and this replacement *conforms to the rules of the ASME Code, Section XI.*
Type Code Symbol Stamp: Not Applicable
Certificate Of Authorization No.: Not Applicable
Expiration Date: Not Applicable

Prepared By Kuldip Singh - Program Lead Engineer (PLE) *Signed By* Kuldip Singh - Program Lead Engineer (PLE)

Date 6/13/05 *Date* 6/13/05

CERTIFICATE OF INSERVICE INSPECTION

I, the undersigned, holding a valid commission issued by the National Board of Boiler and Pressure Vessel Inspectors and the State of Washington *and employed by* Hartford Steam Boiler Of Connecticut of Hartford, Connecticut *have inspected the components described in this Owner's Report during the period* 10/20/2004 *to* 6/21/2005 *and state to the best of my knowledge and belief, the Owner has performed examinations and taken corrective measures described in this Owner's Report in accordance with the requirements of the ASME Code, Section XI.*
By signing this certificate neither the Inspector nor his employer makes any warranty, expressed or implied, concerning the examinations and corrective measures described in this Owner's Report. Furthermore, neither the Inspector nor his employer shall be liable in any manner for any personal injury or property damage or a loss of any kind arising from or connected with this inspection.

Inspector's Signature *Commissions* 10655W A, B, N, I
National Board, State, and Endorsements

Date 6/21/2005

PLAN No. 2-1914

CROSBY

CROSBY VALVE & GAGE COMPANY
WRENTHAM, MASS

Q.C.-44C-1

FORM NV-1 FOR SAFETY AND SAFETY RELIEF VALVES
As required by the Provisions of the ASME Code Rules

DATA REPORT
Safety and Safety Relief Valves

1. Manufactured By Crosby Valve & Gage Co., 43 Kendrick St., Wrentham, MA 02093
Name and Address

Model No. JR-WR Order No N63949D Contract Date 8/4/83 National Board No. --

2. Manufactured For General Electric Company, 175 Curtner Ave. San Jose, CA 95125 Order No. 205-YF229
Name and Address

3. Owner Washington Public Power Supply System - Hanford 2
Name and Address

4. Location of Plant Richland, Washington 99350 SW-RV-101B
MPL No. E12B001

5. Valve Identification Hanford 2 Serial No. N67441-00-0002 Drawing No. DS-C-67441 Rev. 0

Type Relief (Safety, Safety Relief, Pilot, Power Actuated) Orifice Size SPL Inch Pipe Size -- Inch Inlet 3/4 Inch Outlet 1 Inch

6. Set Pressure (PSIG) 275 480 F
Rated Temperature

Stamped Capacity 15 GPM Water @ 70°F @ 10 % Overpressure -- Blowdown (PSIG) 10% S.P.

Hydrostatic Test (PSIG) Inlet 750 Complete Valve 225

7. The material, design, construction and workmanship comply with ASME Code, Section III.

Class 3 Edition 1974, Addenda Date Summer 1975, Case No. 1711, 1567, N242-1

Pressure Containing or Pressure Retaining Components

a. Castings	Serial No. Identification	Material Specification Including Type or Grade
Body		
~~Bonnet~~ Cylinder	N91851-31-0002	ASME SA216 Gr. WCB
b. Bar Stock and Forgings		
~~Spindle~~ Base	N91850-31-0013	ASME SA479 Type 316
Nozzle		
Disc	N91855-32-0025	ASME SB164 Class A
Spring Washers	N92220-31-0043 N92220-31-0013	ASME SA193 Gr. B6
Adjusting Bolt	N92221-31-0009	ASME SA193 Gr. B6
Spindle K61719-31-0016	N92219-31-0016	ASME SA193 Gr. B6

ZX00421634

MAB 8/12/93

	Serial No. or Identification	Material Specification Including Type or Grade
c. Spring	NX4691-0002	ASTM B166
d. Bolting		
e. Other Parts such as Pilot Components		

We certify that the statements made in this report are correct.

Date 8/12 19 83 Signed Crosby Valve & Gage Co. By [signature]
Manufacturer

Certificate of Authorization No. 1878 expires September 30, 1983

CERTIFICATE OF SHOP INSPECTION

I, the undersigned, holding a valid commission issued by the National Board of Boiler and Pressure Vessel Inspectors and the State or Province of Mass. and employed by Arkwright-Boston Manufacturers Mutual Insurance Company have inspected the equipment described in this Data Report on 8-12 19 83 and state that to the best of my knowledge and belief, the Manufacturer has constructed this equipment in accordance with the applicable Subsections of ASME Section III.

By signing this certificate, neither the Inspector nor his employer makes any warranty, expressed or implied, concerning the equipment described in this Data Report. Furthermore, neither the Inspector nor his employer shall be liable in any manner for any personal injury or property damage or a loss of any kind arising from or connected with this inspection.

Date 8-12 19 83 Factory Mutual System

[signature] Commissions Mass # 1287
(Inspector) (National Board, State, Province and No.)

ZX00421635

PLAN No. 2-1914

CROSBY

CROSBY VALVE & GAGE COMPANY
WRENTHAM, MASS

7-15105

*Corrected Report - 2-21-84
dc

CHECKED AND FOUND CERTIFICATION TO MEET THE REQUIREMENTS OF ASME B & PV CODE SECTIONS II AND III 1974 EDITION INCLUDING ADDENDA THRU SUMMER 1975.

MAB 2-21-84

PART: See Below
PART NUMBER: See Below
HEAT NUMBER: See Below
CUSTOMER ORDER NUMBER: 205-YF229
FACTORY ORDER NUMBER: N63949D
QAI: 32044 REV. 3

Linda Chartier 8-12-83 N67441-00-0002
Linda Chartier - Quality Assurance Records Specialist Valve Serial Number

PART	PART NUMBER	HEAT NUMBER
BASE	N91850-31-0013	386068
DISC	N91855-32-0025	M7127B
SPINDLE	N92219-31-0016	835273
SPRING WASHER	N92220-31-0043	G1636
" "	N92220-31-0013	"
CYLINDER	N91851-31-0002	9554A
SPRING	NX4691-0002	NX3503
*ADJUSTING BOLT dc 2-21-84	*N92221-31-0009 dc 2-21-84	*824616 dc 2-21-84

MAB 8-12-83

ZX00421636

4

PLAN No 2-1915

ENERGY NORTHWEST
People·Vision·Solutions

FORM NIS-2 OWNER'S REPORT FOR REPAIRS OR REPLACEMENTS
As Required By The Provisions Of The ASME Code Section XI

Date: 07/14/05
Sheet: 1 Of 1
Unit: Not Applicable

1. **Owner:** Energy Northwest
   Address: Columbia Generating Station, North Power Plant Loop, Richland, Washington, 99352
2. **Plant:** Columbia Generating Station
   Address: Columbia Generating Station, North Power Plant Loop, Richland, Washington, 99352
3. (a) **Work Performed By:** Energy Northwest
   (b) **Repair Organization P.O. No, Job No, etc.:** Energy Northwest
   (c) **Type Code Symbol Stamp:** Not Applicable
   (d) **Certificate Of Authorization No.:** Not Applicable
   (e) **Expiration Date:** Not Applicable
4. **Identification Of System:** Reactor Recirculation Cooling (RRC) System
5. (a) **Applicable Construction Code:** ASME Section III, Code Class 1, 1971 Edition with Winter 1973 Addenda, Code Case: None
   (b) **Applicable Edition Of ASME Section XI Utilized For Repairs Or Replacements:** 1989 Edition with no Addenda, Code Case: None
6. **Identification Of Components Repaired Or Replaced And Replacement Components**

Name Of Component	Name Of Manufacturer	Manufacturer's Serial No	National Board No	Other I.D.	Year Built	Repaired, Replaced Or Replacement	ASME Code Stamped (Yes Or No) Code Class
RRC(51)-4	WPPSS*	RRC(51)-4-P1	N/A	N/A	1983	----------	Yes, Code Class 1

7. **Description Of Work Performed:** Replaced existing studs and nuts for bolted piping flanged joints associated with valve RRC-V-19. The replacement work was performed as follows:
   1) Removed existing studs for the bolted piping flanged joints.
   2) Removed existing nuts for the bolted piping flanged joints.
   3) Installed new studs for the bolted piping flanged joints.
   4) Installed new nuts for the bolted piping flanged joints.

NOTES -

1) * Company name changed from Washington Public Power Supply System (WPPSS) to Energy Northwest (EN) in 1999.

PLAN No 2-1915

ENERGY NORTHWEST
People·Vision·Solutions

FORM NIS-2 OWNER'S REPORT FOR REPAIRS OR REPLACEMENTS (Back)

8 Tests Conducted: Hydrostatic [ ] Pneumatic [ ] Nominal Operating Pressure [ ] None [X]
Test Pressure: Psig Test Temperature: °F
Component Design Pressure: Psig Temperature: °F

9. Remarks (Applicable Manufacturer's Data Reports to be attached): None

CERTIFICATE OF COMPLIANCE

We certify that the statements made in this Owner's Report are correct and this replacement conforms to the rules of the ASME Code, Section XI.
Type Code Symbol Stamp: Not Applicable
Certificate Of Authorization No.: Not Applicable
Expiration Date: Not Applicable

Prepared By Kuldip Singh - Program Lead Engineer (PLE) Signed By Kuldip Singh - Program Lead Engineer (PLE)

Date 7/14/05 Date 7/14/05

CERTIFICATE OF INSERVICE INSPECTION

I, the undersigned, holding a valid commission issued by the National Board of Boiler and Pressure Vessel Inspectors and the State of _____ and employed by _____ have inspected the components described in this Owner's Report during the period _____ to _____ and state to the best of my knowledge and belief, the Owner has performed examinations and taken corrective measures described in this Owner's Report in accordance with the requirements of the ASME Code, Section XI.
By signing this certificate neither the Inspector nor his employer makes any warranty, expressed or implied, concerning the examinations and corrective measures described in this Owner's Report. Furthermore, neither the Inspector nor his employer shall be liable in any manner for any personal injury or property damage or a loss of any kind arising from or connected with this inspection.

Not Required - Replacement 1" NPS And Smaller
Inspector's Signature

Commissions _____
National Board, State, and Endorsements

Date _____

ENERGY NORTHWEST
People·Vision·Solutions

FORM NIS-2 OWNER'S REPORT FOR REPAIRS OR REPLACEMENTS
As Required By The Provisions Of The ASME Code Section XI

Date: 07/15/05
Sheet: 1 Of 2
Unit: Not Applicable

1. **Owner:** Energy Northwest
   Address: Columbia Generating Station, North Power Plant Loop, Richland, Washington, 99352
2. **Plant:** Columbia Generating Station
   Address: Columbia Generating Station, North Power Plant Loop, Richland, Washington, 99352
3. **(a) Work Performed By:** Energy Northwest
   (b) Repair Organization P.O. No, Job No, etc.: Energy Northwest
   (c) Type Code Symbol Stamp: Not Applicable
   (d) Certificate Of Authorization No.: Not Applicable
   (e) Expiration Date: Not Applicable
4. **Identification Of System:** Main Steam (MS) System
5. **(a) Applicable Construction Code:** ASME Section III, Code Class 2, 1971 Edition with Winter 1973 Addenda, Code Case: None
   (b) Applicable Edition Of ASME Section XI Utilized For Repairs Or Replacements: 1989 Edition with no Addenda, Code Case: None
6. **Identification Of Components Repaired Or Replaced And Replacement Components**

Name Of Component	Name Of Manufacturer	Manufacturer's Serial No	National Board No	Other I.D.	Year Built	Repaired, Replaced Or Replacement	ASME Code Stamped (Yes Or No) Code Class
MS(1)-4D	WPPSS*	MS(1)-4D-P3	N/A	N/A	1983	----------	Yes, Code Class 2
MS-53(E)	NPS	NA-2295-023-1	N/A	N/A	1988	Replaced	Yes, Code Class 1
MS-53(E)	Pacific Scientific	9262**	N/A	PSA-35	--------	Replacement	Yes, Code Class 1
MS-53(W)	NPS	NA-2295-023-2	N/A	N/A	1988	Replaced	Yes, Code Class 1
MS-53(W)	Pacific Scientific	10731**	N/A	PSA-35	--------	Replacement	Yes, Code Class 1
MS-1010N(E)	Lisega	NR-1234-3-17	N/A	N/A	--------	Replaced	No, Code Class 1
MS-1010N(E)	Pacific Scientific	17372	N/A	PSA-10	1986	Replacement	Yes, Code Class 1
MS-1010N(W)	NPS	NA-2295-027-21	N/A	N/A	1988	Replaced	Yes, Code Class 1
MS-1010N(W)	Pacific Scientific	17373	N/A	PSA-10	1986	Replacement	Yes, Code Class 1

7. **Description Of Work Performed:** Replaced existing rigid struts for support MS-53. The replacement work was performed as follows:

Support MS-53 (EAST)

1) Removed existing rigid strut, Serial No NA-2295-023-1.
2) Installed replacement snubber, Serial No 9262.
3) Performed visual examination on the support to satisfy Inservice Inspections (ISI)/Preservice Inspections (PSI) requirements. Visual examination results acceptable.

Support MS-53 (WEST)

1) Removed existing rigid strut, Serial No NA-2295-023-2.
2) Installed replacement snubber, Serial No 10731.
3) Performed visual examination on the support to satisfy Inservice Inspections (ISI)/Preservice Inspections (PSI) requirements. Visual examination results acceptable.

Replaced existing rigid struts for support MS-1010N. The replacement work was performed as follows:

Support MS-1010N (EAST)

1) Removed existing rigid strut, Serial No NR-1234-3-17.
2) Installed replacement snubber, Serial No 17372.
3) Performed visual examination on the support to satisfy Inservice Inspections (ISI)/Preservice Inspections (PSI) requirements. Visual examination results acceptable.

Continued On Sheet 2 of 2

PLAN No 2-1916

ENERGY NORTHWEST
People·Vision·Solutions

FORM NIS-2 OWNER'S REPORT FOR REPAIRS OR REPLACEMENTS (Back)

8 Tests Conducted: Hydrostatic [ ] Pneumatic [ ] Nominal Operating Pressure [ ] None [X]
Test Pressure: Psig Test Temperature: °F
Component Design Pressure: Psig Temperature: °F

9. Remarks (Applicable Manufacturer's Data Reports to be attached): See attached NF-1 Code Data Reports for the following replacement snubbers:

Support No	Serial No
MS-1010N(E)	17372
MS-1010N(W)	17373

CERTIFICATE OF COMPLIANCE

We certify that the statements made in this Owner's Report are correct and this replacement *conforms to the rules of the ASME Code, Section XI.*
Type Code Symbol Stamp: Not Applicable
Certificate Of Authorization No.: Not Applicable
Expiration Date: Not Applicable

Prepared By Kuldip Singh - Program Lead Engineer (PLE) Signed By Kuldip Singh - Program Lead Engineer (PLE)

Date 7/15/05 Date 7/15/05.

CERTIFICATE OF INSERVICE INSPECTION

I, the undersigned, holding a valid commission issued by the National Board of Boiler and Pressure Vessel Inspectors and the State of Washington *and employed by* Hartford Steam Boiler Of Connecticut of Hartford, Connecticut *have inspected the components described in this Owner's Report during the period* 6-8-2005 *to* 7-18-2005 *and state to the best of my knowledge and belief, the Owner has performed examinations and taken corrective measures described in this Owner's Report in accordance with the requirements of the ASME Code, Section XI.*
By signing this certificate neither the Inspector nor his employer makes any warranty, expressed or implied, concerning the examinations and corrective measures described in this Owner's Report. Furthermore, neither the Inspector nor his employer shall be liable in any manner for any personal injury or property damage or a loss of any kind arising from or connected with this inspection.

Inspector's Signature Commissions 10655W A,B,N,I
National Board, State, and Endorsements

Date 7-18-2005

PLAN No 2-1916

ENERGY NORTHWEST
People·Vision·Solutions

FORM NIS-2 OWNER'S REPORT FOR REPAIRS OR REPLACEMENTS
As Required By The Provisions Of The ASME Code Section XI

Date: 07/15/05
Sheet: 2 Of 2
Unit: Not Applicable

1. **Owner:** Energy Northwest
   Address: Columbia Generating Station, North Power Plant Loop, Richland, Washington, 99352
2. **Plant:** Columbia Generating Station
   Address: Columbia Generating Station, North Power Plant Loop, Richland, Washington, 99352
3. (a) **Work Performed By:** Energy Northwest
   (b) **Repair Organization P.O. No, Job No, etc.:** Energy Northwest
   (c) **Type Code Symbol Stamp:** Not Applicable
   (d) **Certificate Of Authorization No.:** Not Applicable
   (e) **Expiration Date:** Not Applicable
4. **Identification Of System:** Main Steam (MS) System
5. (a) **Applicable Construction Code:** ASME Section III, Code Class 2, 1971 Edition with Winter 1973 Addenda, Code Case: None
   (b) **Applicable Edition Of ASME Section XI Utilized For Repairs Or Replacements:** 1989 Edition with no Addenda, Code Case: None
6. **Identification Of Components Repaired Or Replaced And Replacement Components**

Name Of Component	Name Of Manufacturer	Manufacturer's Serial No	National Board No	Other I.D.	Year Built	Repaired, Replaced Or Replacement	ASME Code Stamped (Yes Or No) Code Class
MS(1)-4D	WPPSS*	MS(1)-4D-P3	N/A	N/A	1983	----------	Yes, Code Class 2
MS-53(E)	NPS	NA-2295-023-1	N/A	N/A	1988	Replaced	Yes, Code Class 1
MS-53(E)	Pacific Scientific	9262**	N/A	PSA-35	--------	Replacement	Yes, Code Class 1
MS-53(W)	NPS	NA-2295-023-2	N/A	N/A	1988	Replaced	Yes, Code Class 1
MS-53(W)	Pacific Scientific	10731**	N/A	PSA-35	--------	Replacement	Yes, Code Class 1
MS-1010N(E)	Lisega	NR-1234-3-17	N/A	N/A	--------	Replaced	No, Code Class 1
MS-1010N(E)	Pacific Scientific	17372	N/A	PSA-10	1986	Replacement	Yes, Code Class 1
MS-1010N(W)	NPS	NA-2295-027-21	N/A	N/A	1988	Replaced	Yes, Code Class 1
MS-1010N(W)	Pacific Scientific	17373	N/A	PSA-10	1986	Replacement	Yes, Code Class 1

7. **Description Of Work Performed:**

Continuation From Sheet 1 of 2

Support MS-1010N (WEST)

1) Removed existing rigid strut, Serial No NA-2295-027-21.
2) Installed replacement snubber, Serial No 17373.
3) Performed visual examination on the support to satisfy Inservice Inspections (ISI)/Preservice Inspections (PSI) requirements. Visual examination results acceptable.

NOTES -

1) * Company name changed from Washington Public Power Supply System (WPPSS) to Energy Northwest (EN) in 1999.
2) ** Snubber Serial No 9262 was previously removed from support MSRV-3C-1 and snubber Serial No 10731 was previously removed from support MSRV-1C-3.
2) The existing ASME Code Stamped piping system in which the replacement snubbers were installed is Main Steam (MS) piping system MS(1)-4D-P3. This piping system is certified to comply with ASME Section III, Code Class 2, 1971 Edition with Winter 1973 Addenda requirements.
3) ASME Section III, Code Class NF(1) snubbers for ASME Section III, Code Class NF(2) application.

PLAN NO. Z-1916

FORM NF-1 NPT CERTIFICATE HOLDER'S DATA REPORT FOR COMPONENT SUPPORTS*

As Required by the Provisions of the ASME Code Rules, Section III, Division 1

7/13/05

1. Manufactured by Pacific Scientific, Kin-Tech Division, 1346 South State College Blvd., Anaheim, California 92803
(Name and address of NPT Certificate Holder)

2. Manufactured for PUBLIC WASHINGTON POWER SUPPLY SYSTEM, P. O. BOX 968, RICHLAND, WASHINGTON 99352-09
(Name and address of purchaser or owner)

3. Location of Installation PUBLIC WASHINGTON POWER SUPPLY SYSTEM, WNP-2 OPS WHSE COMPLEX, WHS #1, NORTH PO PLANT LOOP, RICHLAND, WASHINGTON 99352

4. Identification

	(a) Component Support I.D. No.	(b) Canadian Registration No.	(c) Applicable Drawings with Last Rev. & Date	(d) Stress Report or Load Capacity Data Sheet	(e) Type of Component Support	(f) Class	(g) Nat'l Board No.	(h) Year Built
(1)	17360	None	1801103-07-J	DR 1544 REV. 0	Linear	1	None	1986
(2)	THRU							
(3)	17374	"	"	"	"	"	"	"
(4)								
(5)								
(6)	MS-1010N (EAST), S/N 17372							
(7)								
(8)	MS-1010N (WEST), S/N 17373							
(9)								
(10)								

5. Remarks:

CERTIFICATE OF COMPLIANCE

We certify that the statements made on this report are correct and that these components supports conform to the rules of construction of the ASME Code for Nuclear Power Plant Components, Section III, Division 1, Edition 1980, Addenda Summer '82, Code Case No. N71-7 & N247, N247, N108, N249-2, N 1644-5 & N71 thru N71-8 (Date)

Date 7-15-86 Signed Pacific Scientific (NPT Certificate Holder) by

Our ASME Certificate of Authorization No. N-1198 to use the "NPT" (NPT)

Symbol expires Aug. 4, 1987 (Date).

CERTIFICATION OF DESIGN

Design Information on File at Pacific Scientific

Stress Report or Load Capacity Data Sheets on File at Pacific Scientific
Filed Per NCA 3256

Design Specifications Certified by (1) ALFJO CAMACHO PE State California

Reg No. M20600.

(Design Report) (Design Report Summary Sheet)

Stress Analysis Report or Load Capacity Data Sheets Certified by (1) Leo E. Ay

PE State California Reg No 13533.

(1) List name only, signature not required.

*Supplemental sheets in form of lists, sketches or drawings may be used provided (1) size is 8½ in., (2) information in items 1, 2, 4c 4g on this Data Report is included on each sheet, and (3) each sheet is numbered and number of sheets is recorded at top of this form.

(10/77) This form (E00075) may be obtained from the Order Dept., ASME, 345 E. 47th St., New York, N.Y. 10017

2 2 6 1 4 1 2 0 7

CERTIFICATE OF SHOP INSPECTION

I, the undersigned, holding a valid commission issued by the National Board of Boiler and Pressure Vessel Inspectors and the State or Province of California and employed by HSBI&I Co. of Hartford, CT have inspected the component supports described in this Data Report on 7-14, 19 86 and state that to the best of my knowledge and belief the NPT Certificate Holder has constructed these component supports in accordance with the ASME Code for Nuclear Power Plant Components.

By signing this certificate, neither the Inspector nor his employer makes any warranty, expressed or implied, concerning the component supports described in this Data Report. Furthermore, neither the Inspector nor his employer shall be liable in any manner for any personal injury or property damage or a loss of any kind arising from or connected with this inspection.

Date 7-16-86

Signed William G. Mayer Commissions Ca 1494
(Nat'l Bd., State, Prov., and No.)

CERTIFICATION OF FIELD INSPECTION

I, the undersigned, holding a valid commission issued by the National Board of Boiler and Pressure Vessel Inspectors and the State or Province of _____ and employed by _____ of _____ have compared the statements in this Data Report with the described component supports and state that the parts referred to as data items _____, not included in the certificate of shop inspection, have been inspected by me and that to the best of my knowledge and belief the NPT Certificate Holder has constructed these component supports in accordance with the ASME Code for Nuclear Power Plant Components.

By signing this certificate neither the Inspector nor his employer makes any warranty, expressed or implied, concerning the component supports described in this Data Report. Furthermore, neither the Inspector nor his employer shall be liable in any manner for any personal injury or property damage or a loss of any kind arising from or connected with this inspection.

Date _____

Signed _____ Commissions _____
(Nat'l Bd., State, Prov., and No.)

PLAN No 2-1917

ENERGY NORTHWEST
People·Vision·Solutions

FORM NIS-2 OWNER'S REPORT FOR REPAIRS OR REPLACEMENTS
As Required By The Provisions Of The ASME Code Section XI

Date: 07/15/05
Sheet: 1 Of 1
Unit: Not Applicable

1. Owner: Energy Northwest
Address: Columbia Generating Station, North Power Plant Loop, Richland, Washington, 99352
2. Plant: Columbia Generating Station
Address: Columbia Generating Station, North Power Plant Loop, Richland, Washington, 99352
3. (a) Work Performed By: Energy Northwest
(b) Repair Organization P.O. No, Job No, etc.: Energy Northwest
(c) Type Code Symbol Stamp: Not Applicable
(d) Certificate Of Authorization No.: Not Applicable
(e) Expiration Date: Not Applicable
4. Identification Of System: Main Steam (MS) System
5. (a) Applicable Construction Code: ASME Section III, Code Class 2, 1971 Edition with Winter 1973 Addenda, Code Case: None
(b) Applicable Edition Of ASME Section XI Utilized For Repairs Or Replacements: 1989 Edition with no Addenda, Code Case: None
6. Identification Of Components Repaired Or Replaced And Replacement Components

Name Of Component	Name Of Manufacturer	Manufacturer's Serial No	National Board No	Other I.D.	Year Built	Repaired, Replaced Or Replacement	ASME Code Stamped (Yes Or No) Code Class
MS(1)-4D	WPPSS*	MS(1)-4D-P3	N/A	N/A	1983	----------	Yes, Code Class 2
MS-56(B)	Pacific Scientific	6152**	N/A	PSA-35	1980	Replacement	Yes, Code Class 1
MS-56(T)	Pacific Scientific	6209**	N/A	PSA-35	1980	Replacement	Yes, Code Class 1

7. Description Of Work Performed: Installed snubbers for support MS-56(Bottom) and MS-56 (Top). The work was performed as follows:

1) Welded new rear brackets.
2) Performed visual examination on the final welds. Visual examination results acceptable.
3) Performed magnetic particle (MT) examination on the final welds. Magnetic particle (MT) examination results acceptable.
4) Welded new stiffener plates.
5) Performed visual examination on the final welds. Visual examination results acceptable.
6) Performed magnetic particle (MT) examination on the final welds. Magnetic particle (MT) examination results acceptable.
7) Installed snubbers.
8) Performed visual examination on the support to satisfy Inservice Inspections (ISI)/Preservice Inspections (PSI) requirements. Visual examination results acceptable.

NOTES -

1) * Company name changed from Washington Public Power Supply System (WPPSS) to Energy Northwest (EN) in 1999.
2) ** Snubber Serial No 6152 was previously removed from support RFW-172 and snubber Serial No 6209 was previously removed from support RFW-164.
2) The existing ASME Code Stamped piping system in which the replacement snubbers were installed is Main Steam (MS) piping system MS(1)-4D-P3. This piping system is certified to comply with ASME Section III, Code Class 2, 1971 Edition with Winter 1973 Addenda requirements.
3) ASME Section III, Code Class NF(1) snubbers for ASME Section III, Code Class NF(2) application.

PLAN No 2-1917

ENERGY NORTHWEST
People · Vision · Solutions

FORM NIS-2 OWNER'S REPORT FOR REPAIRS OR REPLACEMENTS (Back)

8 Tests Conducted: Hydrostatic [ ] *Pneumatic* [ ] *Nominal Operating Pressure* [ ] *None* [X]

Test Pressure: Psig — *Test Temperature:* °F

Component Design Pressure: Psig — *Temperature:* °F

9. Remarks (Applicable Manufacturer's Data Reports to be attached): None

CERTIFICATE OF COMPLIANCE

We certify that the statements made in this Owner's Report are correct and this replacement *conforms to the rules of the ASME Code, Section XI.*

Type Code Symbol Stamp: Not Applicable

Certificate Of Authorization No.: Not Applicable

Expiration Date: Not Applicable

Prepared By Kuldip Singh — Kuldip Singh - Program Lead Engineer (PLE)

Date 7/15/05

Signed By Kuldip Singh — Kuldip Singh - Program Lead Engineer (PLE)

Date 7/15/05

CERTIFICATE OF INSERVICE INSPECTION

I, the undersigned, holding a valid commission issued by the National Board of Boiler and Pressure Vessel Inspectors and the State of Washington *and employed by* Hartford Steam Boiler Of Connecticut of Hartford, Connecticut *have inspected the components described in this Owner's Report during the period* 6-8-2005 *to* 7-22-2005 *and state to the best of my knowledge and belief, the Owner has performed examinations and taken corrective measures described in this Owner's Report in accordance with the requirements of the ASME Code, Section XI.*

By signing this certificate neither the Inspector nor his employer makes any warranty, expressed or implied, concerning the examinations and corrective measures described in this Owner's Report. Furthermore, neither the Inspector nor his employer shall be liable in any manner for any personal injury or property damage or a loss of any kind arising from or connected with this inspection.

Inspector's Signature

Commissions 10655W A, B, N, E

National Board, State, and Endorsements

Date 7-22-2005

PLAN No 2-1918

ENERGY NORTHWEST
People·Vision·Solutions

FORM NIS-2 OWNER'S REPORT FOR REPAIRS OR REPLACEMENTS
As Required By The Provisions Of The ASME Code Section XI

Date: 07/14/05
Sheet: 1 Of 2
Unit: Not Applicable

1. **Owner:** Energy Northwest
   Address: Columbia Generating Station, North Power Plant Loop, Richland, Washington, 99352
2. **Plant:** Columbia Generating Station
   Address: Columbia Generating Station, North Power Plant Loop, Richland, Washington, 99352
3. **(a) Work Performed By:** Energy Northwest
   (b) Repair Organization P.O. No, Job No, etc.: Energy Northwest
   (c) Type Code Symbol Stamp: Not Applicable
   (d) Certificate Of Authorization No.: Not Applicable
   (e) Expiration Date: Not Applicable
4. **Identification Of System:** Low Pressure Core Spray (LPCS) System
5. **(a) Applicable Construction Code:** ASME Section III, Code Class 2, 1971 Edition with Winter 1973 Addenda, Code Case: None
   (b) Applicable Edition Of ASME Section XI Utilized For Repairs Or Replacements: 1989 Edition with no Addenda, Code Case: N-416-1
6. **Identification Of Components Repaired Or Replaced And Replacement Components**

Name Of Component	Name Of Manufacturer	Manufacturer's Serial No	National Board No	Other I.D.	Year Built	Repaired, Replaced Or Replacement	ASME Code Stamped (Yes Or No) Code Class
LPCS(1)-2	WPPSS*	LPCS(1)-2-P1	N/A	N/A	1984	----------	Yes, Code Class 2
LPCS-V-33	Rockwell**	XA941	N/A	N/A	1978	Replaced	Yes, Code Class 1
LPCS-V-33	Flowserve**	58AYQ	N/A	N/A	2004	Replacement	Yes, Code Class 1
LPCS-V-34	Borg Warner***	17867	N/A	N/A	1976	Replaced	Yes, Code Class 1
LPCS-V-34	Flowserve***	89BAA	N/A	N/A	2004	Replacement	Yes, Code Class 1

7. **Description Of Work Performed:** Replaced existing valve LPCS-V-33 and valve LPCS-V-34. The replacement work was performed as follows:
   1) Removed existing valve LPCS-V-33, Serial No XA941.
   2) Removed existing valve LPCS-V-34, Serial No 17867.
   3) Removed existing piping material associated with valve LPCS-V-33 and valve LPCS-V-34.
   4) Installed replacement piping material such as elbow and pipe.
   5) Installed replacement valve LPCS-V-33, Serial No 58AYQ.
   6) Installed replacement valve LPCS-V-34, Serial No 89BAA.
   7) Made required socket welds.
   8) Performed visual examination on the final socket welds. Visual examination results acceptable.
   9) Performed liquid penetrant (PT) examination on the final socket welds. Liquid penetrant (PT) examination results acceptable.
   10) Performed VT-2 visual examination during pressure test to confirm pressure boundary integrity of the joints. No evidence of leakage during the pressure test.

NOTES -

1) * Company name changed from Washington Public Power Supply System (WPPSS) to Energy Northwest (EN) in 1999.
2) ** Rockwell valves are now being manufactured by Flowserve.
3) *** Borg Warner valves are now being manufactured by Flowserve.
4) The existing ASME Code Stamped piping system in which the replacement valve LPCS-V-33, Serial No 58AYQ and replacement valve LPCS-V-34, Serial No 89BAA were installed is Low Pressure Core Spray (LPCS) piping system LPCS(1)-2-P1. This piping system is certified to comply with ASME Section III, Code Class 2, 1971 Edition with Winter 1973 Addenda requirements.

Continued On Sheet 2 of 2

PLAN No 2-1918

ENERGY NORTHWEST
People·Vision·Solutions

FORM NIS-2 OWNER'S REPORT FOR REPAIRS OR REPLACEMENTS (Back)

8 Tests Conducted: Hydrostatic [ ] Pneumatic [ ] Nominal Operating Pressure [X] [ ]
Test Pressure: 310 Psig Test Temperature: 76° F
Component Design Pressure: 470 Psig Temperature: 212° F

9. Remarks (Applicable Manufacturer's Data Reports to be attached): See attached NPV-1 Code Data Reports for the following replacement valves:

EPN No	Serial No
LPCS-V-33	58AYQ
LPCS-V-34	89BAA

CERTIFICATE OF COMPLIANCE

We certify that the statements made in this Owner's Report are correct and this replacement *conforms to the rules of the ASME Code, Section XI.*
Type Code Symbol Stamp: Not Applicable
Certificate Of Authorization No.: Not Applicable
Expiration Date: Not Applicable

Prepared By Kuldip Singh - Program Lead Engineer (PLE) Signed By Kuldip Singh - Program Lead Engineer (PLE)
Date 7/14/05 Date 7/14/05

CERTIFICATE OF INSERVICE INSPECTION

I, the undersigned, holding a valid commission issued by the National Board of Boiler and Pressure Vessel Inspectors and the State of Washington *and employed by* Hartford Steam Boiler Of Connecticut of Hartford, Connecticut *have inspected the components described in this Owner's Report during the period* 2-23-2005 *to* 7-19-2005 *and state to the best of my knowledge and belief, the Owner has performed examinations and taken corrective measures described in this Owner's Report in accordance with the requirements of the ASME Code, Section XI.*
By signing this certificate neither the Inspector nor his employer makes any warranty, expressed or implied, concerning the examinations and corrective measures described in this Owner's Report. Furthermore, neither the Inspector nor his employer shall be liable in any manner for any personal injury or property damage or a loss of any kind arising from or connected with this inspection.

Inspector's Signature Commissions 10165SW A, B, N, I
National Board, State, and Endorsements

Date 7-19-2005

PLAN No 2-1918

ENERGY NORTHWEST
People·Vision·Solutions

FORM NIS-2 OWNER'S REPORT FOR REPAIRS OR REPLACEMENTS
As Required By The Provisions Of The ASME Code Section XI

1. Owner: Energy Northwest
Address: Columbia Generating Station, North Power Plant Loop, Richland, Washington, 99352
2. Plant: Columbia Generating Station
Address: Columbia Generating Station, North Power Plant Loop, Richland, Washington, 99352

Date: 07/09/05
Sheet: 2 Of 2
Unit: Not Applicable

3. (a) Work Performed By: Energy Northwest
(b) Repair Organization P.O. No, Job No, etc.: Energy Northwest
(c) Type Code Symbol Stamp: Not Applicable
(d) Certificate Of Authorization No.: Not Applicable
(e) Expiration Date: Not Applicable
4. Identification Of System: Low Pressure Core Spray (LPCS) System
5. (a) Applicable Construction Code: ASME Section III, Code Class 2, 1971 Edition with Winter 1973 Addenda, Code Case: None
(b) Applicable Edition Of ASME Section XI Utilized For Repairs Or Replacements: 1989 Edition with no Addenda, Code Case: N-416-1
6. Identification Of Components Repaired Or Replaced And Replacement Components

Name Of Component	Name Of Manufacturer	Manufacturer's Serial No	National Board No	Other I.D.	Year Built	Repaired, Replaced Or Replacement	ASME Code Stamped (Yes Or No) Code Class
LPCS(1)-2	WPPSS*	LPCS(1)-2-P1	N/A	N/A	1984	----------	Yes, Code Class 2
LPCS-V-33	Rockwell**	XA941	N/A	N/A	1978	Replaced	Yes, Code Class 1
LPCS-V-33	Flowserve**	58AYQ	N/A	N/A	2004	Replacement	Yes, Code Class 1
LPCS-V-34	Borg Warner***	17867	N/A	N/A	1976	Replaced	Yes, Code Class 1
LPCS-V-34	Flowserve***	89BAA	N/A	N/A	2004	Replacement	Yes, Code Class 1

7. Description Of Work Performed:

Continuation From Sheet 1 of 2

NOTES -

5) The replacement valve LPCS-V-33, Serial No 58AYQ is certified to comply with ASME Section III, Code Class 1, 1974 Edition with Summer 1975 Addenda requirements.
6) The replacement valve LPCS-V-34, Serial No 89BAA is certified to comply with ASME Section III, Code Class 1, 1971 Edition with Winter 1973 Addenda requirements.
7) ASME Section III, Code Class 1 valves for ASME Section III, Code Class 2 application.
8) The liquid penetrant (PT) examination was performed in accordance with the requirements of ASME Section III, Code Class 2, 1992 Edition with no Addenda to satisfy the requirements outlined in Code Case N-416-1.
9) The VT-2 visual examination during pressure test to confirm pressure boundary integrity of the joints was performed in accordance with the requirements of ASME Section XI, 1992 Edition with no Addenda to satisfy the requirements outlined in Code Case N-416-1.

PLAN No. 2-1918

FORM NPV-1 N CERTIFICATE HOLDERS' DATA REPORT FOR NUCLEAR PUMPS OR VALVES*

As Required by the Provisions of the ASME Code, Section III, Div. 1

Philip Rios Pg. 1 of 2

1. Manufactured by Flowserve Corporation, 1900 S. Saunders St., Raleigh, NC 27603 7/8/05
(Name and Address of N Certificate Holder)

2. Manufactured for Energy Northwest PO Box 968 Richland, WA 99352-0968
(Name and Address of Purchaser or Owner)

3. Location of Installation Columbia Generating Station Snake River Whse. Complex N. Powerplant Loop Richland, WA 99352
(Name and Address)

4. Pump or Valve Valve Nominal Inlet Size 1-1/2" (inch) Outlet Size 1-1/2" (inch)

	(a) Model No. Series No. or Type	(b) N Certificate Holder's Serial No.	(c) Canadian Registration No.	(d) Drawing No.	(e) Class	(f) Nat'l. Bd. No.	(g) Year Built
(1)	600#	58AYQ	N/A	04-28221-01 Rev. 0	1	N/A	2004
(2)	600#	59AYQ	N/A	04-28221-01 Rev. 0	1	N/A	2004
(3)							
(4)							
(5)	VALVE LPCS-V-33, S/N 58AYQ						
(6)							
(7)							
(8)							
(9)							
(10)							

5. 1-1/2"-600#-EDWARD PISTON CHECK VALVE
(Brief description of service for which equipment was designed)

BODY & BONNET MATERIAL SA105 PER ASME SECTION III 1977 EDITION, SUMMER 1977 ADDENDA 28221

6. Design Conditions 940 (Pressure) psi 700 (Temperature) °F or Valve Pressure Class 600 (1)

7. Cold Working Pressure 1440 psi at 100 °F.

8. Pressure Retaining Pieces

Mark No.	Material Spec. No.	Manufacturer	Remarks
(a) Castings			
(b) Forgings			
VUKA	SA105	TRINITY	BODY
UPY	SA105	TRINITY	BONNET
16872-1	A565-GR616	DUBOSE	DISC

(1) For manually operated valves only

*Supplemental sheets in form of lists, sketches or drawings may be used provided (1) size is 8-1/2" x 11", (2) information in items 1, 2 and 5 on this Data Report is included on each sheet, and (3) each sheet is numbered and number of sheets is recorded at top of this form.

SATISFACTORY ✓ UNSATISFACTORY ____

FORM NPV-1 (Back)

Valve S/N 58AYQ through 59AYQ

Mark No.	Material Spec. No.	Manufacturer	Remarks
(c) Bolting			
S20751	SA193 GR B7	DUBOSE	CAPSCREW
(d) Other Parts			

9. Hydrostatic test 2150 psi. Disk Differential test pressure 1600 psi.

CERTIFICATE OF COMPLIANCE

We certify that the statements made in this report are correct and that this pump, or valve, conforms to the rules of construction of the ASME Code for Nuclear Power Plant Components. Section III, Div. 1., Edition 1974 Addenda Summer 1975, Code Case No. N/A Date 4/15/04

Signed Flowserve (N Certificate Holder) by W.A. Ras

Our ASME Certificate of Authorization No. N-1562 to use the N (N) symbol expires 11-26-06 (Date)

CERTIFICATION OF DESIGN

Design information on file at Flowserve Corporation Raleigh, NC

Stress analysis report (Class 1 only) on file at Flowserve Corporation Raleigh, NC

Design specifications certified by (1) R.E. Denig

PE State CA Reg. No. 18611

Stress analysis certified by (1) S.L. Adams

PE State NC Reg. No. 4187

(1) Signature not required. List name only.

CERTIFICATE OF SHOP INSPECTION

I, the undersigned, holding a valid commission issued by the National Board of Boiler and Pressure Vessel Inspectors and the State or Province of North Carolina and employed by HSB CT of Hartford Connecticut have inspected the pump, or valve, described in this Data Report on 4/15/04, and state that, to the best of my knowledge and belief, the N Certificate Holder has constructed this pump, or valve, in accordance with ASME Code, Section III.

By signing this certificate neither the Inspector nor his employer makes any warranty, expressed or implied, concerning the equipment described in this s Data Report. Furthermore, neither the Inspector nor his employer shall be liable in any manner for any personal injury or property damage or a loss of any kind arising from or connected with this Inspection.

Date 4/15/04

Signed M. Tull (Inspector) Commissions NC 1421 (Nat'l Bd., State, Prov. and No.)

SATISFACTORY ✓ UNSATISFACTORY ____

Reid II 8-31-04 H

PLAN No. 2-1918

FORM NPV-1 N CERTIFICATE HOLDERS' DATA REPORT FOR NUCLEAR PUMPS OR VALVES*

As Required by the Provisions of the ASME Code, Section III, Div. 1

1. Manufactured by Flowserve Corporation, 1900 S. Saunders St., Raleigh, NC 27603 7/8/05
(Name and Address of N Certificate Holder)

2. Manufactured for Energy Northwest PO Box 968 Richland, WA 99352
(Name and Address of Purchaser or Owner)

3. Location of Installation Columbia Station, Snake River Warehouse North Power Plant Loop Richland, WA 99352
(Name and Address)

4. Pump or Valve Valve Nominal Inlet Size 1-1/2" (inch) Outlet Size 1-1/2" (inch)

	(a) Model No. Series No. or Type	(b) N Certificate Holder's Serial No.	(c) Canadian Registration No.	(d) Drawing No.	(e) Class	(f) Nat'l. Bd. No.	(g) Year Built
(1)	1500#	89BAA	N/A	76910-1 REV. E	1	N/A	2004
(2)	1500#	90BAA	N/A	76910-1 REV. E	1	N/A	2004
(3)							
(4)							
(5)	VALVE LPCS-V-34, S/N 89BAA						
(6)							
(7)							
(8)							
(9)							
(10)							

SATISFACTORY ✓ UNSATISFACTORY ____

Leide II 11-16-04
RECEIPT INSPECTOR / LEVEL / DATE

5. 1-1/2" 1500 Stop Check Valve
(Brief description of service for which equipment was designed)

28458

6. Design Conditions 3125 (Pressure) psi 500 (Temperature) °F or Valve Pressure Class 1500 (1)

7. Cold Working Pressure 3600 psi at 100 °F.

8. Pressure Retaining Pieces

Mark No.	Material Spec. No.	Manufacturer	Remarks
(a) Castings			
M8818	AMS 5387	Tech-Cast	Disc
(b) Forgings			
79675	SA105	Larson	Body
21211-1	SA105	DuBose	Bonnet

(1) For manually operated valves only

*Supplemental sheets in form of lists, sketches or drawings may be used provided (1) size is 8-1/2" x 11", (2) information in items 1, 2 and 5 on this Data Report is included on each sheet, and (3) each sheet is numbered and number of sheets is recorded at top of this form.

2

Valve S/N 89BAA through 90BAA

Mark No.	Material Spec. No.	Manufacturer	Remarks
(c) Bolting			
(d) Other Parts			
		SATISFACTORY ✓ UNSATISFACTORY ___	
		Reidel II 11·16·04	
		RECEIPT INSPECTOR / LEVEL / DATE	

9. Hydrostatic test 5400 psi. Disk Differential test pressure 3960 psi.

CERTIFICATE OF COMPLIANCE

We certify that the statements made in this report are correct and that this pump, or valve, conforms to the rules of construction of the ASME Code for Nuclear Power Plant Components. Section III, Div. 1., Edition 1971 Addenda Winter 1973. Code Case No. N/A. Date 10-28-04

Signed Flowserve (N Certificate Holder) by [signature]

Our ASME Certificate of Authorization No. N-1562 to use the N (N) symbol expires 11-26-06 (Date)

CERTIFICATION OF DESIGN

Design information on file at Flowserve Corporation Raleigh, NC

Stress analysis report (Class 1 only) on file at Flowserve Corporation Raleigh, NC

Design specifications certified by (1) R. Schlosser

PE State WA Reg. No. 21701

Stress analysis certified by (1) R. S. Farrell

PE State NC Reg. No. 28586

(1) Signature not required. List name only.

CERTIFICATE OF SHOP INSPECTION

I, the undersigned, holding a valid commission issued by the National Board of Boiler and Pressure Vessel Inspectors and the State or Province of North Carolina and employed by HSB CT of Hartford Connecticut have inspected the pump, or valve, described in this Data Report on 10 / 28 / 04, and state that, to the best of my knowledge and belief, the N Certificate Holder has constructed this pump, or valve, in accordance with ASME Code, Section III.

By signing this certificate neither the Inspector nor his employer makes any warranty, expressed or implied, concerning the equipment described in this s Data Report. Furthermore, neither the Inspector nor his employer shall be liable in any manner for any personal injury or property damage or a loss of any kind arising from or connected with this Inspection.

Date 10 / 28 / 04

Signed [signature] (Inspector) Commissions NC 1421 (Nat'l Bd., State, Prov. and No.)

PLAN No 2-1919

ENERGY NORTHWEST
People·Vision·Solutions

FORM NIS-2 OWNER'S REPORT FOR REPAIRS OR REPLACEMENTS
As Required By The Provisions Of The ASME Code Section XI

1. Owner: Energy Northwest
Address: Columbia Generating Station, North Power Plant Loop, Richland, Washington, 99352
2. Plant: Columbia Generating Station
Address: Columbia Generating Station, North Power Plant Loop, Richland, Washington, 99352

Date: 07/26/05
Sheet: 1 Of 1
Unit: Not Applicable

3. (a) Work Performed By: Energy Northwest
(b) Repair Organization P.O. No, Job No, etc.: Energy Northwest
(c) Type Code Symbol Stamp: Not Applicable
(d) Certificate Of Authorization No.: Not Applicable
(e) Expiration Date: Not Applicable
4. Identification Of System: High Pressure Core Spray (HPCS) System
5. (a) Applicable Construction Code: ASME Section III, Code Class 2, 1971 Edition with Winter 1973 Addenda, Code Case: None
(b) Applicable Edition Of ASME Section XI Utilized For Repairs Or Replacements: 1989 Edition with no Addenda, Code Case: N-416-1
6. Identification Of Components Repaired Or Replaced And Replacement Components

Name Of Component	Name Of Manufacturer	Manufacturer's Serial No	National Board No	Other I.D.	Year Built	Repaired, Replaced Or Replacement	ASME Code Stamped (Yes Or No) Code Class
HPCS(1)-4CL2	WPPSS*	HPCS(1)-4CL2-P2	N/A	N/A	1983	----------	Yes, Code Class 2
HPCS-V-6	Borg Warner**	17868	N/A	N/A	1976	Replaced	Yes, Code Class 1
HPCS-V-6	Flowserve**	90BAA	N/A	N/A	2004	Replacement	Yes, Code Class 1
HPCS-V-7	Borg Warner**	20213	N/A	N/A	1977	Replaced	Yes, Code Class 1
HPCS-V-7	Flowserve**	36BAY	N/A	N/A	2005	Replacement	Yes, Code Class 1

7. Description Of Work Performed: The purpose of this NIS-2 is to supplement the NIS-2 previously issued as follows:

1) Re-performed VT-2 visual examination during pressure test to confirm pressure boundary integrity of the joints. No evidence of leakage during the pressure test. The pressure test was re-performed to expose the welds to the system pressure based on the system nominal alignment and due to the orientation of the check valves.

PLAN No 2-1919

ENERGY NORTHWEST
People·Vision·Solutions

FORM NIS-2 OWNER'S REPORT FOR REPAIRS OR REPLACEMENTS (Back)

8 Tests Conducted: Hydrostatic [ ] *Pneumatic* [ ] *Nominal Operating Pressure* [X] [ ]

Test Pressure: 131/1340 Psig *Test Temperature:* 88° F

Component Design Pressure: 1575 Psig *Temperature:* 212° F

9. Remarks (Applicable Manufacturer's Data Reports to be attached): The welds were exposed to the following system pressures:

1) Welds 9, 10, 11, 28, 29 and 30 were exposed to water leg pump (keep fill pump) HPCS-P-3 system pressure of 131 Psig at 88° F.
2) Welds 12 and 13 were exposed to pump HPCS-P-1 system pressure of 1340 Psig at 88° F.

CERTIFICATE OF COMPLIANCE

We certify that the statements made in this Owner's Report are correct and this replacement *conforms to the rules of the ASME Code, Section XI.*

Type Code Symbol Stamp: Not Applicable

Certificate Of Authorization No.: Not Applicable

Expiration Date: Not Applicable

Prepared By Kuldip Singh *Signed By* Kuldip Singh

Kuldip Singh - Program Lead Engineer (PLE) Kuldip Singh - Program Lead Engineer (PLE)

Date 7/26/05 *Date* 7/26/05

CERTIFICATE OF INSERVICE INSPECTION

I, the undersigned, holding a valid commission issued by the National Board of Boiler and Pressure Vessel Inspectors and the State of Washington *and employed by* Hartford Steam Boiler Of Connecticut of Hartford, Connecticut *have inspected the components described in this Owner's Report during the period* 7-22-2005 *to* 8-2-2005 *and state to the best of my knowledge and belief, the Owner has performed examinations and taken corrective measures described in this Owner's Report in accordance with the requirements of the ASME Code, Section XI.*

By signing this certificate neither the Inspector nor his employer makes any warranty, expressed or implied, concerning the examinations and corrective measures described in this Owner's Report. Furthermore, neither the Inspector nor his employer shall be liable in any manner for any personal injury or property damage or a loss of any kind arising from or connected with this inspection.

Inspector's Signature *Commissions* 10605SW A, B, N, I

National Board, State, and Endorsements

Date 8-2-2005

ENERGY NORTHWEST
People·Vision·Solutions

FORM NIS-2 OWNER'S REPORT FOR REPAIRS OR REPLACEMENTS
As Required By The Provisions Of The ASME Code Section XI

Date: 07/14/05
Sheet: 1 Of 2
Unit: Not Applicable

1. Owner: Energy Northwest
Address: Columbia Generating Station, North Power Plant Loop, Richland, Washington, 99352
2. Plant: Columbia Generating Station
Address: Columbia Generating Station, North Power Plant Loop, Richland, Washington, 99352
3. (a) Work Performed By: Energy Northwest
(b) Repair Organization P.O. No, Job No, etc.: Energy Northwest
(c) Type Code Symbol Stamp: Not Applicable
(d) Certificate Of Authorization No.: Not Applicable
(e) Expiration Date: Not Applicable
4. Identification Of System: High Pressure Core Spray (HPCS) System
5. (a) Applicable Construction Code: ASME Section III, Code Class 2, 1971 Edition with Winter 1973 Addenda, Code Case: None
(b) Applicable Edition Of ASME Section XI Utilized For Repairs Or Replacements: 1989 Edition with no Addenda, Code Case: N-416-1
6. Identification Of Components Repaired Or Replaced And Replacement Components

Name Of Component	Name Of Manufacturer	Manufacturer's Serial No	National Board No	Other I.D.	Year Built	Repaired, Replaced Or Replacement	ASME Code Stamped (Yes Or No) Code Class
HPCS(1)-4CL2	WPPSS*	HPCS(1)-4CL2-P2	N/A	N/A	1983	----------	Yes, Code Class 2
HPCS-V-6	Borg Warner**	17868	N/A	N/A	1976	Replaced	Yes, Code Class 1
HPCS-V-6	Flowserve**	90BAA	N/A	N/A	2004	Replacement	Yes, Code Class 1
HPCS-V-7	Borg Warner**	20213	N/A	N/A	1977	Replaced	Yes, Code Class 1
HPCS-V-7	Flowserve**	36BAY	N/A	N/A	2005	Replacement	Yes, Code Class 1

7. Description Of Work Performed: Replaced existing valve HPCS-V-6 and valve HPCS-V-7. The replacement work was performed as follows:

1) Removed existing valve HPCS-V-6, Serial No 17868.
2) Removed existing valve HPCS-V-7, Serial No 20213.
3) Removed existing piping material associated with valve HPCS-V-6 and valve HPCS-V-7.
4) Beveled cut pipe ends.
5) Installed replacement piping material such as elbow and pipe.
6) Installed replacement valve HPCS-V-6, Serial No 90BAA.
7) Installed replacement valve HPCS-V-7, Serial No 36BAY.
8) Made required socket welds.
9) Performed visual examination on the final socket welds. Visual examination results acceptable.
10) Performed liquid penetrant (PT) examination on the final socket welds. Liquid penetrant (PT) examination results acceptable.
11) Made required circumferential butt welds.
12) Performed visual examination on the final circumferential butt welds. Visual examination results acceptable.
13) Performed radiographic (RT) examination on the final circumferential butt welds. Radiographic (RT) examination results acceptable.
14) Performed VT-2 visual examination during pressure test to confirm pressure boundary integrity of the joints. No evidence of leakage during the pressure test.

NOTES -

1) * Company name changed from Washington Public Power Supply System (WPPSS) to Energy Northwest (EN) in 1999.
2) ** Borg Warner valves are now being manufactured by Flowserve.
3) The existing ASME Code Stamped piping system in which the replacement valve HPCS-V-6, Serial No 90BAA and replacement valve HPCS-V-7, Serial No 36BAY were installed is High Pressure Core Spray (HPCS) piping system HPCS(1)-4CL2-P2. This piping system is certified to comply with ASME Section III, Code Class 2, 1971 Edition with Winter 1973 Addenda requirements.

Continued On Sheet 2 of 2

PLAN No 2-1919

ENERGY NORTHWEST
People·Vision·Solutions

FORM NIS-2 OWNER'S REPORT FOR REPAIRS OR REPLACEMENTS (Back)

8 Tests Conducted: Hydrostatic [ ] Pneumatic [ ] Nominal Operating Pressure [X] [ ]
Test Pressure: 100 Psig Test Temperature: 73° F
Component Design Pressure: 1575 Psig Temperature: 212° F

9. Remarks (Applicable Manufacturer's Data Reports to be attached): See attached NPV-1 Code Data Reports for the following replacement valves:

EPN No	Serial No
HPCS-V-6	90BAA
HPCS-V-7	36BAY

CERTIFICATE OF COMPLIANCE

We certify that the statements made in this Owner's Report are correct and this replacement conforms to the rules of the ASME Code, Section XI.
Type Code Symbol Stamp: Not Applicable
Certificate Of Authorization No.: Not Applicable
Expiration Date: Not Applicable

Prepared By Kuldip Singh - Program Lead Engineer (PLE) Signed By Kuldip Singh - Program Lead Engineer (PLE)
Date 7/14/05 Date 7/14/05

CERTIFICATE OF INSERVICE INSPECTION

I, the undersigned, holding a valid commission issued by the National Board of Boiler and Pressure Vessel Inspectors and the State of Washington and employed by Hartford Steam Boiler Of Connecticut of Hartford, Connecticut have inspected the components described in this Owner's Report during the period 4-5-2005 to 7-19-2005 and state to the best of my knowledge and belief, the Owner has performed examinations and taken corrective measures described in this Owner's Report in accordance with the requirements of the ASME Code, Section XI.
By signing this certificate neither the Inspector nor his employer makes any warranty, expressed or implied, concerning the examinations and corrective measures described in this Owner's Report. Furthermore, neither the Inspector nor his employer shall be liable in any manner for any personal injury or property damage or a loss of any kind arising from or connected with this inspection.

Inspector's Signature Commissions 10655W A, B, N, I
National Board, State, and Endorsements

Date 7-19-2005

ENERGY NORTHWEST
People·Vision·Solutions

FORM NIS-2 OWNER'S REPORT FOR REPAIRS OR REPLACEMENTS
As Required By The Provisions Of The ASME Code Section XI

Date: 07/09/05
Sheet: 2 Of 2
Unit: Not Applicable

1. Owner: Energy Northwest
Address: Columbia Generating Station, North Power Plant Loop, Richland, Washington, 99352
2. Plant: Columbia Generating Station
Address: Columbia Generating Station, North Power Plant Loop, Richland, Washington, 99352
3. (a) Work Performed By: Energy Northwest
(b) Repair Organization P.O. No, Job No, etc.: Energy Northwest
(c) Type Code Symbol Stamp: Not Applicable
(d) Certificate Of Authorization No.: Not Applicable
(e) Expiration Date: Not Applicable
4. Identification Of System: High Pressure Core Spray (HPCS) System
5. (a) Applicable Construction Code: ASME Section III, Code Class 2, 1971 Edition with Winter 1973 Addenda, Code Case: None
(b) Applicable Edition Of ASME Section XI Utilized For Repairs Or Replacements: 1989 Edition with no Addenda, Code Case: N-416-1
6. Identification Of Components Repaired Or Replaced And Replacement Components

Name Of Component	Name Of Manufacturer	Manufacturer's Serial No	National Board No	Other I.D.	Year Built	Repaired, Replaced Or Replacement	ASME Code Stamped (Yes Or No) Code Class
HPCS(1)-4CL2	WPPSS*	HPCS(1)-4CL2-P2	N/A	N/A	1983	----------	Yes, Code Class 2
HPCS-V-6	Borg Warner**	17868	N/A	N/A	1976	Replaced	Yes, Code Class 1
HPCS-V-6	Flowserve**	90BAA	N/A	N/A	2004	Replacement	Yes, Code Class 1
HPCS-V-7	Borg Warner**	20213	N/A	N/A	1977	Replaced	Yes, Code Class 1
HPCS-V-7	Flowserve**	36BAY	N/A	N/A	2005	Replacement	Yes, Code Class 1

7. Description Of Work Performed:

Continuation From Sheet 1 of 2

NOTES -

4) The replacement valve HPCS-V-6, Serial No 90BAA and replacement valve HPCS-V-7, Serial No 36BAY are certified to comply with ASME Section III, Code Class 1, 1971 Edition with Winter 1973 Addenda requirements.
5) ASME Section III, Code Class 1 valves for ASME Section III, Code Class 2 application.
6) The liquid penetrant (PT) examination was performed in accordance with the requirements of ASME Section III, Code Class 2, 1992 Edition with no Addenda to satisfy the requirements outlined in Code Case N-416-1.
7) The radiographic (RT) examination was performed in accordance with the requirements of ASME Section III, Code Class 2, 1992 Edition with no Addenda to satisfy the requirements outlined in Code Case N-416-1.
8) The VT-2 visual examination during pressure test to confirm pressure boundary integrity of the joints was performed in accordance with the requirements of ASME Section XI, 1992 Edition with no Addenda to satisfy the requirements outlined in Code Case N-416-1.

PLAN No. 2-1919

FORM NPV-1 N CERTIFICATE HOLDERS' DATA REPORT FOR NUCLEAR PUMPS OR VALVES*

As Required by the Provisions of the ASME Code, Section III, Div. 1

PLAN No. 2-1919 Pg. 1 of 2

1. Manufactured by Flowserve Corporation, 1900 S. Saunders St., Raleigh, NC 27603
(Name and Address of N Certificate Holder)

2. Manufactured for Energy Northwest PO Box 968 Richland, WA 99352
(Name and Address of Purchaser or Owner)

3. Location of Installation Columbia Station, Snake River Warehouse North Power Plant Loop Richland, WA 99352 7/3/05
(Name and Address)

4. Pump or Valve Valve Nominal Inlet Size 1-1/2" (inch) Outlet Size 1-1/2" (inch)

	(a) Model No. Series No. or Type	(b) N Certificate Holder's Serial No.	(c) Canadian Registration No.	(d) Drawing No.	(e) Class	(f) Nat'l. Bd. No.	(g) Year Built
(1)	1500#	89BAA	N/A	76910-1 REV. E	1	N/A	2004
(2)	1500#	90BAA	N/A	76910-1 REV. E	1	N/A	2004
(3)							
(4)	VALVE HPCS-V-6, S/N 90BAA.						
(5)							
(6)							
(7)							
(8)							
(9)							
(10)							

SATISFACTORY ✓ UNSATISFACTORY ____

RECEIPT INSPECTOR / LEVEL / DATE

5. 1-1/2" 1500 Stop Check Valve
(Brief description of service for which equipment was designed)

28458

6. Design Conditions 3125 (Pressure) psi 500 (Temperature) °F or Valve Pressure Class 1500 (1)

7. Cold Working Pressure 3600 psi at 100 °F.

8. Pressure Retaining Pieces

Mark No.	Material Spec. No.	Manufacturer	Remarks
(a) Castings			
M8818	AMS 5387	Tech-Cast	Disc
(b) Forgings			
79675	SA105	Larson	Body
21211-1	SA105	DuBose	Bonnet

(1) For manually operated valves only

*Supplemental sheets in form of lists, sketches or drawings may be used provided (1) size is 8-1/2" x 11", (2) information in items 1, 2 and 5 on this Data Report is included on each sheet, and (3) each sheet is numbered and number of sheets is recorded at top of this form.

2

Valve S/N 89BAA through 90BAA

Mark No.	Material Spec. No.	Manufacturer	Remarks
(c) Bolting			
(d) Other Parts			
		SATISFACTORY ✓ UNSATISFACTORY ___	
		[illegible] II 11-16-04	
		RECEIPT INSPECTOR / LEVEL / DATE	

9. Hydrostatic test 5400 psi. Disk Differential test pressure 3960 psi.

CERTIFICATE OF COMPLIANCE

We certify that the statements made in this report are correct and that this pump, or valve, conforms to the rules of construction of the ASME Code for Nuclear Power Plant Components. Section III, Div. 1., Edition 1971 Addenda Winter 1973, Code Case No. N/A, Date 10-28-04

Signed Flowserve (N Certificate Holder) by [signature]

Our ASME Certificate of Authorization No. N-1562 to use the N (N) symbol expires 11-26-06 (Date)

CERTIFICATION OF DESIGN

Design information on file at Flowserve Corporation Raleigh, NC

Stress analysis report (Class 1 only) on file at Flowserve Corporation Raleigh, NC

Design specifications certified by (1) R. Schlosser

PE State WA Reg. No. 21701

Stress analysis certified by (1) R. S. Farrell

PE State NC Reg. No. 28586

(1) Signature not required. List name only.

CERTIFICATE OF SHOP INSPECTION

I, the undersigned, holding a valid commission issued by the National Board of Boiler and Pressure Vessel Inspectors and the State or Province of North Carolina and employed by HSB CT of Hartford Connecticut have inspected the pump, or valve, described in this Data Report on 10 / 28 / 04, and state that, to the best of my knowledge and belief, the N Certificate Holder has constructed this pump, or valve, in accordance with ASME Code, Section III.

By signing this certificate neither the Inspector nor his employer makes any warranty, expressed or implied, concerning the equipment described in this s Data Report. Furthermore, neither the Inspector nor his employer shall be liable in any manner for any personal injury or property damage or a loss of any kind arising from or connected with this Inspection.

Date 10 / 28 / 04

Signed [signature] (Inspector) Commissions NC 1421 (Nat'l Bd., State, Prov. and No.)

PLAN No. 2-1919.

FORM NPV-1 N CERTIFICATE HOLDERS' DATA REPORT FOR NUCLEAR PUMPS OR VALVES*

As Required by the Provisions of the ASME Code, Section III, Div. 1

1. Manufactured by Flowserve Corporation, 1900 S. Saunders St., Raleigh, NC 27603
(Name and Address of N Certificate Holder)

2. Manufactured for Energy Northwest PO Box 968 Richland, WA 99352-0968
(Name and Address of Purchaser or Owner)

3. Location of Installation Columbia Generating Station Snake River Warehouse Complex, Richland, WA 99352
(Name and Address)

7/3/05.

4. Pump or Valve Valve Nominal Inlet Size 1-1/2" (inch) Outlet Size 1-1/2" (inch)

	(a) Model No. Series No. or Type	(b) N Certificate Holder's Serial No.	(c) Canadian Registration No.	(d) Drawing No.	(e) Class	(f) Nat'l. Bd. No.	(g) Year Built
(1)	1500#	36BAY	N/A	76860-1 REV. E	1	N/A	2005
(2)	1500#	37BAY	N/A	76860-1 REV. E	1	N/A	2005
(3)	1500#	38BAY	N/A	76860-1 REV. E	1	N/A	2005
(4)	1500#	39BAY	N/A	76860-1 REV. E	1	N/A	2005
(5)							
(6)							
(7)	VALVE HPCS-V-7, S/N 36BAY						
(8)							
(9)							
(10)							

5. 1-1/2" 1500# Y-Piston Check Valve
(Brief description of service for which equipment was designed)

**valve also meets the requirements of ASME Section III 1974 Edition Summer 1975 Addenda, Class 1 30170

6. Design Conditions 3600 (Pressure) psi 100 (Temperature) °F or Valve Pressure Class 1500 (1)

7. Cold Working Pressure 3600 psi at 100 °F.

8. Pressure Retaining Pieces

Mark No.	Material Spec. No.	Manufacturer	Remarks
(a) Castings			
M8818	AMS 5387 Gr. Cobalt 6	Tech-Cast	Disc
(b) Forgings			
82763	SA105	Larson	Body
M864	SA105	Nova	Bonnet

(1) For manually operated valves only

*Supplemental sheets in form of lists, sketches or drawings may be used provided (1) size is 8-1/2" x 11", (2) information in items 1, 2 and 5 on this Data Report is included on each sheet, and (3) each sheet is numbered and number of sheets is recorded at top of this form.

2

Valve S/N 36BAY through 39BAY

Mark No.	Material Spec. No.	Manufacturer	Remarks
(c) Bolting			
(d) Other Parts			

9. Hydrostatic test 5400 psi. Disk Differential test pressure 3960 psi.

CERTIFICATE OF COMPLIANCE

We certify that the statements made in this report are correct and that this pump, or valve, conforms to the rules of construction of the ASME Code for Nuclear Power Plant Components. Section III, Div. 1., Edition 1971**

Addenda Winter 1973**, Code Case No. N/A, Date 2-17-05

Signed Flowserve (N Certificate Holder) by [signature]

Our ASME Certificate of Authorization No. N-1562 to use the N (N) symbol expires 11-26-06 (Date)

CERTIFICATION OF DESIGN

Design information on file at Flowserve Corporation Raleigh, NC

Stress analysis report (Class 1 only) on file at Flowserve Corporation Raleigh, NC

Design specifications certified by (1) R. Schlosser

PE State WA Reg. No. 21701

Stress analysis certified by (1) R.S. Farrell

PE State NC Reg. No. 028656

(1) Signature not required. List name only.

CERTIFICATE OF SHOP INSPECTION

I, the undersigned, holding a valid commission issued by the National Board of Boiler and Pressure Vessel Inspectors and the State or Province of North Carolina and employed by HSB CT of Hartford Connecticut have inspected the pump, or valve, described in this Data Report on 2/17/05, and state that, to the best of my knowledge and belief, the N Certificate Holder has constructed this pump, or valve, in accordance with ASME Code, Section III.

By signing this certificate neither the Inspector nor his employer makes any warranty, expressed or implied, concerning the equipment described in this s Data Report. Furthermore, neither the Inspector nor his employer shall be liable in any manner for any personal injury or property damage or a loss of any kind arising from or connected with this Inspection.

Date 2/17/05

Signed [signature] (Inspector) Commissions NC 1421 (Nat'l Bd., State, Prov. and No.)

PLAN No 2-1920

ENERGY NORTHWEST
People·Vision·Solutions

FORM NIS-2 OWNER'S REPORT FOR REPAIRS OR REPLACEMENTS
As Required By The Provisions Of The ASME Code Section XI

Date: 06/09/05
Sheet: 1 Of 1
Unit: Not Applicable

1. **Owner:** Energy Northwest
   Address: Columbia Generating Station, North Power Plant Loop, Richland, Washington, 99352
2. **Plant:** Columbia Generating Station
   Address: Columbia Generating Station, North Power Plant Loop, Richland, Washington, 99352
3. **(a) Work Performed By:** Energy Northwest
   (b) Repair Organization P.O. No, Job No, etc.: Energy Northwest
   (c) Type Code Symbol Stamp: Not Applicable
   (d) Certificate Of Authorization No.: Not Applicable
   (e) Expiration Date: Not Applicable
4. **Identification Of System:** Reactor Core Isolation Cooling (RCIC) System
5. **(a) Applicable Construction Code:** ASME Section III, Code Class 1, 1971 Edition with Winter 1973 Addenda, Code Case: None
   (b) Applicable Edition Of ASME Section XI Utilized For Repairs Or Replacements: 1989 Edition with no Addenda, Code Case: None
6. **Identification Of Components Repaired Or Replaced And Replacement Components**

Name Of Component	Name Of Manufacturer	Manufacturer's Serial No	National Board No	Other I.D.	Year Built	Repaired, Replaced Or Replacement	ASME Code Stamped (Yes Or No) Code Class
RCIC(1)-4CL1	WPPSS *	RCIC(1)-4CL1-P1	N/A	N/A	1984	----------	Yes, Code Class 1

7. **Description Of Work Performed:** Replaced existing studs and nuts for upper bulkhead penetration bolted flanged joint. The replacement work was performed as follows:
   1) Removed existing studs and nuts.
   2) Performed VT-1 visual examination on replacement studs for the bolted flanged joint for ISI (PSI). VT-1 visual examination results acceptable.
   3) Performed VT-1 visual examination on replacement nuts for the bolted flanged joint for ISI (PSI). VT-1 visual examination results acceptable.
   4) Reinstalled VT-1 visually examined existing studs for the bolted flanged joint.
   5) Reinstalled VT-1 visually examined existing nuts for the bolted flanged joint.
   6) Performed VT-2 visual examination during pressure test to confirm pressure boundary integrity of the bolted flanged joint. No evidence of leakage during the pressure test.

NOTES -

1) * Company name changed from Washington Public Power Supply System (WPPSS) to Energy Northwest (EN) in 1999.

PLAN No 2-1920

ENERGY NORTHWEST
People·Vision·Solutions

FORM NIS-2 OWNER'S REPORT FOR REPAIRS OR REPLACEMENTS (Back)

8 Tests Conducted: Hydrostatic [ ] Pneumatic [ ] Nominal Operating Pressure [X] Other [ ]
Test Pressure: 1020 Psig Test Temperature: 170° F
Component Design Pressure: 1500 Psig Temperature: 170° F

9. Remarks (Applicable Manufacturer's Data Reports to be attached): None

CERTIFICATE OF COMPLIANCE

We certify that the statements made in this Owner's Report are correct and this replacement conforms to the rules of the ASME Code, Section XI.
Type Code Symbol Stamp: Not Applicable
Certificate Of Authorization No.: Not Applicable
Expiration Date: Not Applicable

Prepared By Kuldip Singh - Program Lead Engineer (PLE) Signed By Kuldip Singh - Program Lead Engineer (PLE)

Date 6/15/05 Date 6/15/05

CERTIFICATE OF INSERVICE INSPECTION

I, the undersigned, holding a valid commission issued by the National Board of Boiler and Pressure Vessel Inspectors and the State of Washington and employed by Hartford Steam Boiler Of Connecticut of Hartford, Connecticut have inspected the components described in this Owner's Report during the period 2/7/2005 to 6/21/2005 and state to the best of my knowledge and belief, the Owner has performed examinations and taken corrective measures described in this Owner's Report in accordance with the requirements of the ASME Code, Section XI.
By signing this certificate neither the Inspector nor his employer makes any warranty, expressed or implied, concerning the examinations and corrective measures described in this Owner's Report. Furthermore, neither the Inspector nor his employer shall be liable in any manner for any personal injury or property damage or a loss of any kind arising from or connected with this inspection.

Inspector's Signature Commissions 10655W A,B,N,I
National Board, State, and Endorsements

Date 6/21/2005

PLAN No 2-1921

ENERGY NORTHWEST
People·Vision·Solutions

FORM NIS-2 OWNER'S REPORT FOR REPAIRS OR REPLACEMENTS
As Required By The Provisions Of The ASME Code Section XI

1. Owner: Energy Northwest
Address: Columbia Generating Station, North Power Plant Loop, Richland, Washington, 99352
2. Plant: Columbia Generating Station
Address: Columbia Generating Station, North Power Plant Loop, Richland, Washington, 99352

Date: 07/14/05
Sheet: 1 Of 2
Unit: Not Applicable

3. (a) Work Performed By: Energy Northwest
(b) Repair Organization P.O. No, Job No, etc.: Energy Northwest
(c) Type Code Symbol Stamp: Not Applicable
(d) Certificate Of Authorization No.: Not Applicable
(e) Expiration Date: Not Applicable
4. Identification Of System: Standby Liquid Control (SLC) System
5. (a) Applicable Construction Code: ASME Section III, Code Class 1, 1971 Edition with Winter 1972 Addenda, Code Case: None
(b) Applicable Edition Of ASME Section XI Utilized For Repairs Or Replacements: 1989 Edition with no Addenda, Code Case: None
6. Identification Of Components Repaired Or Replaced And Replacement Components

Name Of Component	Name Of Manufacturer	Manufacturer's Serial No	National Board No	Other I.D.	Year Built	Repaired, Replaced Or Replacement	ASME Code Stamped (Yes Or No) Code Class
SLC(2)-4S	WPPSS*	SLC(2)-4S-P1	N/A	N/A	1983	----------	Yes, Code Class 1
SLC-V-4B	Conax	3	90	N/A	1975	----------	Yes, Code Class 1
Trigger Body	Conax	5885	N/A	N/A	2000	Replaced	Yes, Code Class 1
Trigger Body	Conax	5800	N/A	N/A	1999	Replacement	Yes, Code Class 1
Inlet Fitting	Conax	5887	N/A	N/A	2000	Replaced	Yes, Code Class 1
Inlet Fitting	Conax	5798	N/A	N/A	1999	Replacement	Yes, Code Class 1

7. Description Of Work Performed: Replaced parts for the existing valve SLC-V-4B, Serial No 3, National Board No 90. The replacement work was performed as follows:

1) Removed the existing Trigger Body Subassembly Serial No 5885 from the valve.
2) Installed new replacement Trigger Body Subassembly Serial No 5800 in the valve.
3) Removed the existing Inlet Fitting Serial No 5887 from the valve.
4) Installed new replacement Inlet Fitting Serial No 5798 in the valve.
5) Performed VT-3 visual examination on the existing studs for the valve joint. VT-3 visual examination results acceptable. Note - One (1) set of studs cover both the inlet and the outlet joints.
6) Performed VT-3 visual examination on the existing nuts for the valve inlet joint. VT-3 visual examination results acceptable.
7) Performed VT-3 visual examination on the existing nuts for the valve outlet joint. VT-3 visual examination results acceptable.
8) Reinstalled refurbished valve SLC-V-4B, Serial No 3, National Board No 90.
9) Reinstalled VT-3 visually examined existing studs and nuts for the valve inlet and outlet joints.
10) Performed VT-2 visual examination during pressure test to confirm pressure boundary integrity of the joints. No evidence of leakage during the pressure test.

NOTES -

1) * Company name changed from Washington Public Power Supply System (WPPSS) to Energy Northwest in 1999.
2) The existing ASME Code Stamped piping system in which the existing valve SLC-V-4B, Serial No 3, National Board No 90 was reinstalled is Standby Liquid Control (SLC) piping system SLC(2)-4S-P1. This piping system is certified to comply with ASME Section III, Code Class 1, 1971 Edition with Winter 1973 Addenda requirements.
3) ASME Section III, Code Class 1, 1971 Edition with Winter 1972 Addenda for the existing valve SLC-V-4B, Serial No 3, National Board No 90.

Continued On Sheet 2 of 2

PLAN No 2-1921

ENERGY NORTHWEST
People·Vision·Solutions

FORM NIS-2 OWNER'S REPORT FOR REPAIRS OR REPLACEMENTS (Back)

8 Tests Conducted: Hydrostatic [ ] **Pneumatic** [ ] **Nominal Operating Pressure** [X] [ ]

Test Pressure: 1170 Psig **Test Temperature:** Ambient

Component Design Pressure: 1400 Psig **Temperature:** 150° F

9. Remarks (Applicable Manufacturer's Data Reports to be attached): 1) See attached N-2 Code Data Reports for the following new replacement valve parts:

Valve Part	Serial No
Trigger Body Subassembly	5800
Inlet Fitting	5798

2) The design pressure of 1400 Psig and design temperature of 150° F are for both valve SLC-V-4B and Standby Liquid Control (SLC) piping system SLC(2)-4S-P1

CERTIFICATE OF COMPLIANCE

We certify that the statements made in this Owner's Report are correct and this replacement *conforms to the rules of the ASME Code, Section XI.*

Type Code Symbol Stamp: Not Applicable

Certificate Of Authorization No.: Not Applicable

Expiration Date: Not Applicable

Prepared By Kuldip Singh - Program Lead Engineer (PLE) **Signed By** Kuldip Singh - Program Lead Engineer (PLE)

Date 7/14/05 **Date** 7/14/05

CERTIFICATE OF INSERVICE INSPECTION

I, the undersigned, holding a valid commission issued by the National Board of Boiler and Pressure Vessel Inspectors and the State of Washington *and employed by* Hartford Steam Boiler Of Connecticut of Hartford, Connecticut *have inspected the components described in this Owner's Report during the period* 4-26-2005 *to* 7-19-2005 *and state to the best of my knowledge and belief, the Owner has performed examinations and taken corrective measures described in this Owner's Report in accordance with the requirements of the ASME Code, Section XI.*

By signing this certificate neither the Inspector nor his employer makes any warranty, expressed or implied, concerning the examinations and corrective measures described in this Owner's Report. Furthermore, neither the Inspector nor his employer shall be liable in any manner for any personal injury or property damage or a loss of any kind arising from or connected with this inspection.

Inspector's Signature **Commissions** NB10655 10655W A, B, N, I
National Board, State, and Endorsements

Date 7-19-2005

ENERGY NORTHWEST
People·Vision·Solutions

FORM NIS-2 OWNER'S REPORT FOR REPAIRS OR REPLACEMENTS
As Required By The Provisions Of The ASME Code Section XI

Date: 07/14/05
Sheet: 2 Of 2
Unit: Not Applicable

1. **Owner:** Energy Northwest
   Address: Columbia Generating Station, North Power Plant Loop, Richland, Washington, 99352
2. **Plant:** Columbia Generating Station
   Address: Columbia Generating Station, North Power Plant Loop, Richland, Washington, 99352
3. **(a) Work Performed By:** Energy Northwest
   (b) Repair Organization P.O. No, Job No, etc.: Energy Northwest
   (c) Type Code Symbol Stamp: Not Applicable
   (d) Certificate Of Authorization No.: Not Applicable
   (e) Expiration Date: Not Applicable
4. **Identification Of System:** Standby Liquid Control (SLC) System
5. **(a) Applicable Construction Code:** ASME Section III, Code Class 1, 1971 Edition with Winter 1972 Addenda, Code Case: None
   (b) Applicable Edition Of ASME Section XI Utilized For Repairs Or Replacements: 1989 Edition with no Addenda, Code Case: None
6. **Identification Of Components Repaired Or Replaced And Replacement Components**

Name Of Component	Name Of Manufacturer	Manufacturer's Serial No	National Board No	Other I.D.	Year Built	Repaired, Replaced Or Replacement	ASME Code Stamped (Yes Or No) Code Class
SLC(2)-4S	WPPSS*	SLC(2)-4S-P1	N/A	N/A	1983	----------	Yes, Code Class 1
SLC-V-4B	Conax	3	90	N/A	1975	----------	Yes, Code Class 1
Trigger Body	Conax	5885	N/A	N/A	2000	Replaced	Yes, Code Class 1
Trigger Body	Conax	5800	N/A	N/A	1999	Replacement	Yes, Code Class 1
Inlet Fitting	Conax	5887	N/A	N/A	2000	Replaced	Yes, Code Class 1
Inlet Fitting	Conax	5798	N/A	N/A	1999	Replacement	Yes, Code Class 1

7. **Description Of Work Performed:**

Continuation From Sheet 1 of 2

NOTES -

4) ASME Section III, Code Class 1, 1977 Edition with Summer 1977 Addenda for the new replacement Trigger Body Subassembly Serial No 5800. The new replacement Trigger Body Subassembly certified to 1977 Edition with Summer 1977 Addenda is acceptable for use in the existing valve certified to 1971 Edition with Winter 1972 Addenda. This acceptability is documented in ASME Section XI Plan No 2-1618.

5) ASME Section III, Code Class 1, 1977 Edition with Summer 1977 Addenda for the new replacement Inlet Fitting Serial No 5798. The new replacement Inlet Fitting certified to 1977 Edition with Summer 1977 Addenda is acceptable for use in the existing valve certified to 1971 Edition with Winter 1972 Addenda. This acceptability is documented in ASME Section XI Plan No 2-1618.

PLAN NO. 2-1921

005

FORM N-2 CERTIFICATE HOLDERS' DATA REPORT FOR IDENTICAL NUCLEAR PARTS AND APPURTENANCES*

As Required by the Provisions of the ASME Code, Section III

Not to Exceed One Day's Production

Philip Smith 7/13/05. Pg. 1 of 2

1. Manufactured and certified by IST Conax Nuclear, 402 Sonwil Drive, Cheektowaga, NY 14225
(name and address of NPT Certificate Holder)

2. Manufactured for Washington Public Power, Richland, WA 99352
(name and address of Purchaser)

3. Location of installation WNP-2 Richland, WA 99352
(name and address)

4. Type: N20000, Rev. G (drawing no.) | SA479 304SST (mat'l spec. no.) | 75 KSI (tensile strength) | N/A (CRN) | 1999 (year built)

5. ASME Code, Section III, Division 1: 77 (edition) | S77 (addenda date) | 1 (class) | N/A (Code Case no.)

6. Fabricated in accordance with Const. Spec. (Div. 2 only) N/A (no.) Revision _____ Date _____

7. Remarks: Trigger Body Subassembly for explosive actuated valve replacement kit for standby liquid control system.

Para. NB-2121 (b) is applicable to ram. Press Fit/Seal on .328 & .4375 diameters. Overall subassembly length is 2.5".

Pressure Test at 2800 psi for 10 minutes.

8. Nom. thickness (in.) See Remarks Min. design thickness (in.) See Remarks Dia. ID (ft & in.) See Remarks Length overall (ft & in.) See Remarks

9. When applicable, Certificate Holders' Data Reports are attached for each item of this report:

	Part or Appurtenance Serial Number	National Board No. in Numerical Order		Part or Appurtenance Serial Number	National Board No. in Numerical Order
(1)	5800	5800	(26)		
(2)	5801	5801	(27)		
(3)			(28)		
(4)			(29)		
(5)			(30)		
(6)	VALVE SLC-V-4B		(31)		
(7)			(32)		
(8)	TRIGGER BODY S/N 5800		(33)		
(9)			(34)		
(10)			(35)		
(11)			(36)		
(12)			(37)		
(13)			(38)		
(14)			(39)		
(15)			(40)		
(16)			(41)		
(17)			(42)		
(18)			(43)		
(19)			(44)		
(20)			(45)		
(21)			(46)		
(22)			(47)		
(23)			(48)		
(24)			(49)		
(25)			(50)		

0. Design pressure 1500 psi. Temp. 150 °F. Hydro. test pressure * See Remarks (when applicable) at temp. °F

*Supplemental information in the form of lists, sketches, or drawings may be used provided (1) size is 8½ x 11, (2) information in items 2 and 3 on this Data Report is included on each sheet, (3) each sheet is numbered and the number of sheets is recorded at the top of this form.

Certificate Holder's Serial Nos. 5800 through 5801

CERTIFICATION OF DESIGN

Design specifications certified by George I. Skoda (when applicable) P.E. State CA Reg. no. 15847

Design report* certified by Francis J. Domino (when applicable) P.E. State NY Reg. no. 36832

CERTIFICATE OF COMPLIANCE

We certify that the statements made in this report are correct and that this (these) Trigger B ody Sub Assembly conforms to the rules of construction of the ASME Code, Section III, Division 1.

NPT Certificate of Authorization No. N-1850 Expires September 2, 2001

Date 6/22/99 Name IST Conax Nuclear (NPT Certificate Holder) Signed Paul Elouchapm (authorized representative)

CERTIFICATE OF INSPECTION

I, the undersigned, holding a valid commission issued by the National Board of Boiler and Pressure Vessel Inspectors and the State or Province of New York and employed by Hartford Steam Boiler Inspection & Insurance Company of Hartford, CT have inspected these items described in this Data Report on JUN 22 1999, and state that to the best of my knowledge and belief, the Certificate Holder has fabricated these parts or appurtenances in accordance with the ASME Code, Section III, Division 1. Each part listed has been authorized for stamping on the date shown above.
By signing this certificate, neither the inspector nor his employer makes any warranty, expressed or implied, concerning the equipment described in this Data Report. Furthermore, neither the inspector nor his employer shall be liable in any manner for any personal injury or property damage or loss of any kind arising from or connected with this inspection.

Date 6-22-99 Signed [illegible] (Authorized Inspector) Commissions NB 10964AN NY 5057 [Nat'l Bd. (incl. endorsements) and state or prov. and no.]

PLAN No. 2-1921

FORM N-2 CERTIFICATE HOLDERS' DATA REPORT FOR IDENTICAL NUCLEAR PARTS AND APPURTENANCES*

As Required by the Provisions of the ASME Code, Section III
Not to Exceed One Day's Production

007
7/13/05

1. Manufactured and certified by IST Conax Nuclear, 402 Sonwil Drive, Cheektowaga, NY 14225
(name and address of NPT Certificate Holder)

2. Manufactured for Washington Public Power Supply, Richland, WA 99352
(name and address of Purchaser)

3. Location of installation WNP-2, Richland, WA 99352
(name and address)

4. Type: N38017, Rev. F (drawing no.) | SA479 304SST (mat'l spec. no.) | 75 KSI (tensile strength) | N/A (CRN) | 1999 (year built)

5. ASME Code, Section III, Division 1: 77 (edition) | S77 (addenda date) | 1 (class) | N/A (Code Case no.)

6. Fabricated in accordance with Const. Spec. (Div. 2 only) N/A (no.) Revision _____ Date _____

7. Remarks: Inlet Fitting for explosive actuated valve replacement kit for standby liquid control system.

Pressure Test at 2800 psi for 10 minutes.

8. Nom. thickness (in.) .040 Min. design thickness (in.) .031 Dia. ID (ft & in.) .895" Length overall (ft & in.) 2.245"

9. When applicable, Certificate Holders' Data Reports are attached for each item of this report:

	Part or Appurtenance Serial Number	National Board No. in Numerical Order		Part or Appurtenance Serial Number	National Board No. in Numerical Order
(1)	5798	5798	(26)		
(2)	5799	5799	(27)		
(3)			(28)		
(4)			(29)		
(5)			(30)		
(6)	VALVE SLC-V-4B		(31)		
(7)			(32)		
(8)	INLET FITTING S/N 5798		(33)		
(9)			(34)		
(10)			(35)		
(11)			(36)		
(12)			(37)		
(13)			(38)		
(14)			(39)		
(15)			(40)		
(16)			(41)		
(17)			(42)		
(18)			(43)		
(19)			(44)		
(20)			(45)		
(21)			(46)		
(22)			(47)		
(23)			(48)		
(24)			(49)		
(25)			(50)		

0. Design pressure 1500 psi. Temp. 150 °F. Hydro. test pressure * See Remarks (when applicable) at temp. °F

*Supplemental information in the form of lists, sketches, or drawings may be used provided (1) size is 8½ x 11, (2) information in items 2 and 3 on this Data Report is included on each sheet, (3) each sheet is numbered and the number of sheets is recorded at the top of this form.

FORM N-2 (Back - Pg. 2 of 2)

Certificate Holder's Serial Nos. 5798 through 5799

CERTIFICATION OF DESIGN

Design specifications certified by George I. Skoda (when applicable) P.E. State CA Reg. no. 15847

Design report* certified by Francis J. Domino (when applicable) P.E. State NY Reg. no. 36832

CERTIFICATE OF COMPLIANCE

We certify that the statements made in this report are correct and that this (these) Inlet Fittings conforms to the rules of construction of the ASME Code, Section III, Division 1.

NPT Certificate of Authorization No. N-1850 Expires September 2, 2001

Date 6/22/99 Name IST Conax Nuclear (NPT Certificate Holder) Signed [signature] (authorized representative)

CERTIFICATE OF INSPECTION

I, the undersigned, holding a valid commission issued by the National Board of Boiler and Pressure Vessel Inspectors and the State or Province of New York and employed by Hartford Steam Boiler Inspection & Insurance Company of Hartford, CT have inspected these items described in this Data Report on JUN. 22, 1999, and state that to the best of my knowledge and belief, the Certificate Holder has fabricated these parts or appurtenances in accordance with the ASME Code, Section III, Division 1. Each part listed has been authorized for stamping on the date shown above.
By signing this certificate, neither the inspector nor his employer makes any warranty, expressed or implied, concerning the equipment described in this Data Report. Furthermore, neither the inspector nor his employer shall be liable in any manner for any personal injury or property damage or loss of any kind arising from or connected with this inspection.

Date 6-22-99 Signed [signature] (Authorized Inspector) Commissions NB 10964AN NY 5057 (Nat'l Bd. (incl. endorsements) and state or prov. and no.)

PLAN No 2-1922

ENERGY NORTHWEST
People·Vision·Solutions

FORM NIS-2 OWNER'S REPORT FOR REPAIRS OR REPLACEMENTS
As Required By The Provisions Of The ASME Code Section XI

1. Owner: Energy Northwest
Address: Columbia Generating Station, North Power Plant Loop, Richland, Washington, 99352
2. Plant: Columbia Generating Station
Address: Columbia Generating Station, North Power Plant Loop, Richland, Washington, 99352

Date: 12/17/04
Sheet: 1 Of 1
Unit: Not Applicable

3. (a) Work Performed By: Energy Northwest
(b) Repair Organization P.O. No, Job No, etc.: Energy Northwest
(c) Type Code Symbol Stamp: Not Applicable
(d) Certificate Of Authorization No.: Not Applicable
(e) Expiration Date: Not Applicable
4. Identification Of System: Process Instrumentation (PI) System
5. (a) Applicable Construction Code: ASME Section III, Code Class 2, 1974 Edition with Winter 1975 Addenda, Code Case: None
(b) Applicable Edition Of ASME Section XI Utilized For Repairs Or Replacements: 1989 Edition with no Addenda, Code Case: None
6. Identification Of Components Repaired Or Replaced And Replacement Components

Name Of Component	Name Of Manufacturer	Manufacturer's Serial No	National Board No	Other I.D.	Year Built	Repaired, Replaced Or Replacement	ASME Code Stamped (Yes Or No) Code Class
PI(1)-4S-X-72e	JCI	PI(1)-4S-X-72e	N/A	N/A	1983	----------	Yes, Code Class 2
PI-VX-264 (PI-V-X264)	Target Rock	9	N/A	N/A	1980	Replaced	Yes, Code Class 2
PI-VX-264 (PI-V-X264)	Target Rock	20	N/A	N/A	1997	Replacement	Yes, Code Class 2

7. Description Of Work Performed: Replaced existing valve PI-VX-264 (PI-V-X264). The replacement work was performed as follows:
1) Removed existing valve PI-VX-264 (PI-V-X264), Serial No 9.
2) Installed replacement valve PI-VX-264 (PI-V-X264), Serial No 20.
3) Made required socket welds.
4) Performed visual examination on the final socket welds. Visual examination results acceptable.
5) Performed liquid penetrant (PT) examination on the final socket welds. Liquid penetrant (PT) examination results acceptable.

NOTES -
1) The existing ASME Code Stamped instrument system in which the replacement valve PI-VX-264 (PI-V-X264), Serial No 20 was installed is Process Instrument (PI) system PI(1)-4S-X-72e. This process instrument system is certified to comply with ASME Section III, Code Class 2, 1974 Edition with Winter 1975 Addenda requirements.
2) The replacement valve PI-VX-264 (PI-V-X264), Serial No 20 is certified to comply with ASME Section III, Code Class 2, 1974 Edition with Winter 1975 Addenda requirements.

PLAN No 2-1922

ENERGY NORTHWEST
People·Vision·Solutions

FORM NIS-2 OWNER'S REPORT FOR REPAIRS OR REPLACEMENTS (Back)

8 Tests Conducted: Hydrostatic [ ] **Pneumatic** [ ] **Nominal Operating Pressure** [ ] **None** [X]

Test Pressure: Psig **Test Temperature:** °F

Component Design Pressure: Psig **Temperature:** °F

9. Remarks (Applicable Manufacturer's Data Reports to be attached): See attached NPV-1 Code Data Report for the replacement valve PI-VX-264 (PI-V-X264), Serial No 20.

CERTIFICATE OF COMPLIANCE

We certify that the statements made in this Owner's Report are correct and this replacement ***conforms to the rules of the ASME Code, Section XI.***

Type Code Symbol Stamp: Not Applicable

Certificate Of Authorization No.: Not Applicable

Expiration Date: Not Applicable

Prepared By Kuldip Singh - Program Lead Engineer (PLE) ***Signed By*** Kuldip Singh - Program Lead Engineer (PLE)

Date 12/17/04 ***Date*** 12/17/04

CERTIFICATE OF INSERVICE INSPECTION

I, the undersigned, holding a valid commission issued by the National Board of Boiler and Pressure Vessel Inspectors and the State of _____ and employed by _____ have inspected the components described in this Owner's Report during the period _____ to _____ and state to the best of my knowledge and belief, the Owner has performed examinations and taken corrective measures described in this Owner's Report in accordance with the requirements of the ASME Code, Section XI.

By signing this certificate neither the Inspector nor his employer makes any warranty, expressed or implied, concerning the examinations and corrective measures described in this Owner's Report. Furthermore, neither the Inspector nor his employer shall be liable in any manner for any personal injury or property damage or a loss of any kind arising from or connected with this inspection.

Not Required - Replacement 1" NPS And Smaller ***Commissions*** _____

Inspector's Signature National Board, State, and Endorsements

Date _____

PLAN No. 2-1922

PI-VX-264 (PI-V-X264), S/N 20

FORM NPV-1 CERTIFICATE HOLDERS' DATA REPORT FOR NUCLEAR PUMPS OR VALVES*
As Required by the Provisions of the ASME Code, Section III, Division 1

Pg. 1 of 1

1. Manufactured and certified by Target Rock Corp.; 1966E Broadhollow Rd.; E. Farmingdale, NY 11735
(name and address of N Certificate Holder)

2. Manufactured for Washington Public Power Supply System; Richland, WA 99352
(name and address of Purchaser)

3. Location of Installation WNP-2; North Power Plain Loop; Richland, WA 99352
(name and address)

4. Model No., Series No., or Type 79TT-001 Drawing 79TT-001 Rev. G CRN N/A

5. ASME Code, Section III, Division 1: 1974 (edition) Winter 1975 (addenda date) 2 (class) None (Code Case no.)

6. Pump or valve Valve Nominal inlet size 1 (in.) Outlet size 1 (in.)

7. Material: Body SA182 F316L Bonnet SA479 316 Disc SA479 316 Bolting N/A

(a) Cert. Holder's Serial No.	(b) Nat'l Board No.	(c) Body Serial No.	(d) Bonnet Serial No.	(e) Disc Serial No.
20	NA	5210	3821	1135
-		-	-	-

Code Data Report

* Supplemental information in form of lists, sketches, or drawings may be used provided (1) size is 8½ x 11, (2) information in items 1 through 4 on this Data Report is included on each sheet, (3) each sheet is numbered and the number of sheets is recorded at the top of this form.

(12/88) This form (E00037) may be obtained from the Order Dept., ASME, 22 Law Drive, Box 2300, Fairfield, NJ 07007-2300 REPRINT 6/93

0269980585

FORM NPV-1 (BACK - Pg. 2 of 2)

Certificate Holder's Serial No. 20

8. Design conditions 45 (pressure) psi 340 (temperature) °F or valve pressure class N/A (1)

9. Cold working pressure 1545 psi at 100 °F

10. Hydrostatic test 2345 psi. Disc differential test pressure N/A psi

11. Remarks: Indicator Tube SA479 316 S/N 4498

0269980586

CERTIFICATION OF DESIGN

Design Specification certified by S. Fox P.E. State WA Reg. No. 16168
Design Report certified by Not Applicable P.E. State - Reg. No. -

CERTIFICATE OF COMPLIANCE

We certify that the statements made in this report are correct and that this pump or valve conforms to the rules for construction of the ASME Code, Section III, Division 1.
N Certificate of Authorization No. N-1947 Expires 12/12/98

Date 4/28/97 Name Target Rock Corporation (N Certificate Holder) Signed R. E. Glazier, Manager, Q.E. (authorized representative)

CERTIFICATE OF INSPECTION

I, the undersigned, holding a valid commission issued by the National Board of Boiler and Pressure Vessel Inspectors and the State of Province of New York and employed by Commercial Union Ins. of Boston, MA have inspected the pump, or valve, described in this Data Report on 4/28/97 and state that to the best of my knowledge and belief, the Certificate Holder has constructed this pump, or valve, in accordance with the ASME Code, Section III, Division 1.

By signing this certificate, neither the inspector nor his employer makes any warranty, expressed or implied, concerning the component described in this Data Report. Furthermore, neither the inspector nor his employer shall be liable in any manner for any personal injury or property damage or a loss of any kind arising from or connected with this inspection.

Date 4/28/97 Signed William A Holder (Authorized Inspector) Commissions N.Y. STATE COMMISSION NO. 2288 ALSO COMMISSIONED IN PENN., OHIO & CONN. (Nat'l. Bd. (incl. endorsements) and state or prov. and no.)

(1) For manually operated valves only.

PLAN No 2-1923

ENERGY NORTHWEST
People·Vision·Solutions

FORM NIS-2 OWNER'S REPORT FOR REPAIRS OR REPLACEMENTS
As Required By The Provisions Of The ASME Code Section XI

1. Owner: Energy Northwest
Address: Columbia Generating Station, North Power Plant Loop, Richland, Washington, 99352
2. Plant: Columbia Generating Station
Address: Columbia Generating Station, North Power Plant Loop, Richland, Washington, 99352

Date: 07/07/05
Sheet: 1 Of 2
Unit: Not Applicable

3. (a) Work Performed By: Energy Northwest
(b) Repair Organization P.O. No, Job No, etc.: Energy Northwest
(c) Type Code Symbol Stamp: Not Applicable
(d) Certificate Of Authorization No.: Not Applicable
(e) Expiration Date: Not Applicable
4. Identification Of System: Residual Heat Removal (RHR) System
5. (a) Applicable Construction Code: ASME Section III, Code Class 1*, 1971 Edition with Winter 1973 Addenda, Code Case: None
(b) Applicable Edition Of ASME Section XI Utilized For Repairs Or Replacements: 1989 Edition with no Addenda, Code Case: None
6. Identification Of Components Repaired Or Replaced And Replacement Components

Name Of Component	Name Of Manufacturer	Manufacturer's Serial No	National Board No	Other I.D.	Year Built	Repaired, Replaced Or Replacement	ASME Code Stamped (Yes Or No) Code Class
RHR(1)-2B	WPPSS**	RHR(1)-2B-P1	N/A	N/A	1984	----------	Yes, Code Class 2
RHR(1)-4B	WPPSS**	RHR(1)-4B-P1	N/A	N/A	1983	----------	Yes, Code Class 1
RHR-V-53B	Anchor Darling	E6330-2-1	N/A	N/A	1979	Replaced	Yes, Code Class 1
RHR-V-53B	Flowserve***	AU526	N/A	N/A	2003	Replacement	Yes, Code Class 1

7. Description Of Work Performed: Replaced existing valve RHR-V-53B. The replacement work was performed as follows:

VALVE RHR-V-53B, WELDS XI-1 AND XI-3

1) Removed existing valve RHR-V-53B, Serial No E6330-2-1.
2) Beveled cut pipe ends for welds XI-1 and XI-3.
3) Performed magnetic particle (MT) examination on the beveled pipe ends for welds XI-1 and XI-3. Magnetic particle (MT) examination results acceptable.
4) Installed replacement valve RHR-V-53B, Serial No AU526.
5) Made required circumferential butt weld XI-1.
6) Surface finished the circumferential butt weld XI-1 in accordance with the ISI weld finish details.
7) Performed visual examination on the final circumferential butt weld XI-1. Visual examination results acceptable.
8) Performed magnetic particle (MT) examination on the final circumferential butt weld XI-1. Magnetic particle (MT) examination results acceptable.
9) Performed ultrasonic (UT) examination on the final circumferential butt weld XI-1 for ISI (PSI). Ultrasonic (UT) examination results acceptable.
10) Performed radiographic (RT) examination on the final circumferential butt weld XI-1. Radiographic (RT) examination results acceptable.
11) Made required circumferential butt weld XI-3.
12) Performed visual examination on the final circumferential butt weld XI-3. Visual examination results acceptable.
13) Performed magnetic particle (MT) examination on the final circumferential butt weld XI-3. Magnetic particle (MT) examination results acceptable.
14) Performed radiographic (RT) examination on the final circumferential butt weld XI-3. Radiographic (RT) examination results acceptable.
15) Performed VT-2 visual examination during pressure test to confirm pressure boundary integrity of the joints. No evidence of leakage during the pressure test.

Continued On Sheet 2 of 2

PLAN No 2-1923

ENERGY NORTHWEST
People·Vision·Solutions

FORM NIS-2 OWNER'S REPORT FOR REPAIRS OR REPLACEMENTS (Back)

8 Tests Conducted: Hydrostatic ☐ **Pneumatic** ☐ **Nominal Operating Pressure** ☐ **Other** ☐

Test Pressure: 240/1120* Psig **Test Temperature:** 68/170*° F

Component Design Pressure: 500/1550** Psig **Temperature:** 480/575**° F

9. Remarks (Applicable Manufacturer's Data Reports to be attached): 1) See attached NPV-1 Code Data Report for the replacement valve RHR-V-53B, Serial No AU526. 2) * The test pressure of 240 Psig and the test temperature of 68° F for weld XI-3 was recorded during plant conditions set up in accordance with PPM No 18.1.1 "VT-2 Examination Of The New RHR-V-53B". 3) * The test pressure of 1120 Psig and the test temperature of 170° F for weld XI-1 was recorded during ASME Section XI pressure test which was performed in accordance with PPM No OSP-RPV-R801 "Reactor Pressure Vessel Leakage Test". 4) ** Component design pressure of 500 Psig and design temperature of 480° F is for ASME Section III, Code Class 2, Weld No XI-3. 5) ** Component design pressure of 1550 Psig and design temperature of 575° F is for ASME Section III, Code Class 1, Weld No XI-1.

CERTIFICATE OF COMPLIANCE

We certify that the statements made in this Owner's Report are correct and this replacement *conforms to the rules of the ASME Code, Section XI.*

Type Code Symbol Stamp: Not Applicable

Certificate Of Authorization No.: Not Applicable

Expiration Date: Not Applicable

Prepared By Kuldip Singh - Program Lead Engineer (PLE) **Signed By** Kuldip Singh - Program Lead Engineer (PLE)

Date 7/7/05 **Date** 7/7/05

CERTIFICATE OF INSERVICE INSPECTION

I, the undersigned, holding a valid commission issued by the National Board of Boiler and Pressure Vessel Inspectors and the State of Washington *and employed by* Hartford Steam Boiler Of Connecticut of Hartford, Connecticut *have inspected the components described in this Owner's Report during the period* 3/7/2005 *to* 7/12/2005 *and state to the best of my knowledge and belief, the Owner has performed examinations and taken corrective measures described in this Owner's Report in accordance with the requirements of the ASME Code, Section XI.*

By signing this certificate neither the Inspector nor his employer makes any warranty, expressed or implied, concerning the examinations and corrective measures described in this Owner's Report. Furthermore, neither the Inspector nor his employer shall be liable in any manner for any personal injury or property damage or a loss of any kind arising from or connected with this inspection.

Inspector's Signature **Commissions** 10655W A, B, N, I
National Board, State, and Endorsements

Date 7-12-2005

PLAN No 2-1923

ENERGY NORTHWEST
People·Vision·Solutions

FORM NIS-2 OWNER'S REPORT FOR REPAIRS OR REPLACEMENTS
As Required By The Provisions Of The ASME Code Section XI

1. Owner: Energy Northwest
Address: Columbia Generating Station, North Power Plant Loop, Richland, Washington, 99352
2. Plant: Columbia Generating Station
Address: Columbia Generating Station, North Power Plant Loop, Richland, Washington, 99352

Date: 07/07/05
Sheet: 2 Of 2
Unit: Not Applicable

3. (a) Work Performed By: Energy Northwest
(b) Repair Organization P.O. No, Job No, etc.: Energy Northwest
(c) Type Code Symbol Stamp: Not Applicable
(d) Certificate Of Authorization No.: Not Applicable
(e) Expiration Date: Not Applicable
4. Identification Of System: Residual Heat Removal (RHR) System
5. (a) Applicable Construction Code: ASME Section III, Code Class 1*, 1971 Edition with Winter 1973 Addenda, Code Case: None
(b) Applicable Edition Of ASME Section XI Utilized For Repairs Or Replacements: 1989 Edition with no Addenda, Code Case: None
6. Identification Of Components Repaired Or Replaced And Replacement Components

Name Of Component	Name Of Manufacturer	Manufacturer's Serial No	National Board No	Other I.D.	Year Built	Repaired, Replaced Or Replacement	ASME Code Stamped (Yes Or No) Code Class
RHR(1)-2B	WPPSS**	RHR(1)-2B-P1	N/A	N/A	1984	----------	Yes, Code Class 2
RHR(1)-4B	WPPSS**	RHR(1)-4B-P1	N/A	N/A	1983	----------	Yes, Code Class 1
RHR-V-53B	Anchor Darling	E6330-2-1	N/A	N/A	1979	Replaced	Yes, Code Class 1
RHR-V-53B	Flowserve	AU526	N/A	N/A	2003	Replacement	Yes, Code Class 1

7. Description Of Work Performed:

Continuation From Sheet 1 of 2

VALVE RHR-V-53B, WELDS XI-10, XI-13, XI-14 AND XI-15

1) Prepped cut pipe ends on as needed basis.
2) Performed liquid penetrant (PT) examination on the prepped pipe ends. The liquid penetrant (PT) examination results acceptable.
3) Installed replacement piping material such as pipe, pipe cap.
4) Made required socket welds.
5) Performed visual examination on the final socket welds. Visual examination results acceptable.
6) Performed liquid penetrant (PT) examination on both the final socket welds. Liquid penetrant (PT) examination results acceptable.

NOTES -

1) * ASME Section III, Code Class 1 for welds XI-1, XI-10, XI-13, XI-14 and XI-15. ASME Section III, Code Class 2 for weld XI-3.
2) ** Company name changed from Washington Public Power Supply System (WPPSS) to Energy Northwest (EN) in 1999.
3) *** Anchor Darling valves are now being manufactured by Flowserve.
4) The existing ASME Code Stamped piping system in which the replacement valve RHR-V-53B, Serial No AU526 (Weld No XI-3) was installed is Residual Heat Removal (RHR) piping system RHR(1)-2B-P1. This piping system is certified to comply with ASME Section III, Code Class 2, 1971 Edition with Winter 1973 Addenda requirements.
5) The existing ASME Code Stamped piping system in which the replacement valve RHR-V-53B, Serial No AU526 (Weld No's XI-1, XI-10, XI-13, XI-14 and XI-15) was installed is Residual Heat Removal (RHR) piping system RHR(1)-4B-P1. This piping system is certified to comply with ASME Section III, Code Class 1, 1971 Edition with Winter 1973 Addenda requirements.
6) The replacement valve RHR-V-53B, Serial No AU526 is certified to comply with ASME Section III, Code Class 1, 1974 Edition with Summer 1976 Addenda requirements.

PLAN No. 2-1923.

FORM NPV-1 CERTIFICATE HOLDERS' DATA REPORT FOR NUCLEAR PUMPS OR VALVES*

As Required by the Provisions of the ASME Code, Section III, Div. 1

1. Manufactured and certified by Flowserve Corporation, 1900 S. Saunders Street, Raleigh, NC 27603 6/28/05.
   (Name and Address of N Certificate Holder)
2. Manufactured for Energy Northwest, P. O. Box 968, Richland, WA 99352
   (Name and Address of Purchaser)
3. Location of Installation Energy Northwest, Columbia Generating Station, North Power Plant Loop, Richland, WA 99352
   (Name and Address)
4. Model No., Series No., or Type FW Gate Valve Drawing W0226031 Rev - CRN –
5. ASME Code, Section III, Division 1: 1974 (edition) Summer, 1976 (addenda date) 1 (class) 1516-2, 1567, 1677 * (Code Case no.)
6. Pump or Valve Valve Nominal Inlet Size 12" (inch) Outlet Size 12" (inch)
7. Material: Body SA352, LCB Bonnet SA352, LCB Disk SA352, LCB Bolting SA193, Gr. B7

(a) Cert. Holder's Serial No.	(b) Nat'l Board No.	(c) Body Serial No.	(d) Bonnet Serial No.	(e) Disk Serial No.
AU526	N/A	E7781B-1	E7781B-2	E7781B-3

VALVE RHR-V-53B

*Supplemental information in form of lists, sketches or drawings may be used provided (1) size is 8-1/2" x 11", (2) information in items 1 through 4 on this Data Report is included on each sheet, and (3) each sheet is numbered and the number of sheets is recorded at the top of this form.

2

Certificate Holder's Serial No. AU526

8. Design conditions 1550 (pressure) psi 575 (temperature) °F or valve pressure class 778

9. Cold working pressure 1668 psi at 100 °F

10. Hydrostatic test 2600 psi. Disk Differential test pressure 1700 psi.

11. Remarks: Nuclear FW gate valve. Stud material heat code AQO; Nut material SA194, Gr. 7, heat code G163.
Drain vent connection material SA350, LF2, heat 216766.
*Code Cases 1535-2 & 1773 also apply.

S. O. 23106

CERTIFICATION OF DESIGN

Design specification certified by	Jack R. Cole	P.E. State	WA	Reg. no.	0020653
Design Report certified by	Ronald S. Farrell	P.E. State	NC	Reg. no.	028656

CERTIFICATE OF COMPLIANCE

We certify that the statements made in this report are correct and that this pump, or valve, conforms to the rules of construction of the ASME Code for Nuclear Power Plant Components. Section III, Div. 1.,

N Certificate of Authorization No. N-1562 Expires Nov. 26, 2003

Date 9/30/03 Name Flowserve Corporation (N Certificate Holder) Signed (Authorized Representative)

CERTIFICATE OF INSPECTION

I, the undersigned, holding a valid commission issued by the National Board of Boiler and Pressure Vessel Inspectors and the State or Province of North Carolina and employed by HSB CT of Hartford Connecticut have inspected the pump, or valve, described in this Data Report on 9 / 30 / 03, and state that, to the best of my knowledge and belief, the Certificate Holder has constructed this pump, or valve, in accordance with ASME Code, Section III. Div. 1.

By signing this certificate, neither the Inspector nor his employer makes any warranty, expressed or implied, concerning the component described in this Data Report. Furthermore, neither the Inspector nor his employer shall be liable in any manner for any personal injury or property damage or a loss of any kind arising from or connected with this Inspection.

Date 9 / 30 / 03

Signed (Inspector) Commissions NC1421 (Nat'l Bd., State, Prov. and No.)

PLAN No 2-1924

ENERGY NORTHWEST
People·Vision·Solutions

FORM NIS-2 OWNER'S REPORT FOR REPAIRS OR REPLACEMENTS
As Required By The Provisions Of The ASME Code Section XI

1. Owner: Energy Northwest
Address: Columbia Generating Station, North Power Plant Loop, Richland, Washington, 99352
2. Plant: Columbia Generating Station
Address: Columbia Generating Station, North Power Plant Loop, Richland, Washington, 99352

Date: 06/13/05
Sheet: 1 Of 1
Unit: Not Applicable

3. (a) Work Performed By: Energy Northwest
(b) Repair Organization P.O. No, Job No, etc.: Energy Northwest
(c) Type Code Symbol Stamp: Not Applicable
(d) Certificate Of Authorization No.: Not Applicable
(e) Expiration Date: Not Applicable
4. Identification Of System: Service Water (SW) System
5. (a) Applicable Construction Code: ASME Section III, Code Class 3, 1971 Edition with Winter 1973 Addenda, Code Case: None
(b) Applicable Edition Of ASME Section XI Utilized For Repairs Or Replacements: 1989 Edition with no Addenda, Code Case: None
6. Identification Of Components Repaired Or Replaced And Replacement Components

Name Of Component	Name Of Manufacturer	Manufacturer's Serial No	National Board No	Other I.D.	Year Built	Repaired, Replaced Or Replacement	ASME Code Stamped (Yes Or No) Code Class
SW(21)-2	WPPSS*	SW(21)-2-P1	N/A	N/A	1983	----------	Yes, Code Class 3

7. Description Of Work Performed: Fabricated/machined replacement restricting orifice plate for SW-FE-35A. The work was performed as follows:

1) Cut the plate material to the required dimensions.
2) Fabricated/machined the restricting orifice plate to the final dimensions.
3) Final finished the restricting orifice plate surfaces.
4) Marked the required information on the restricting orifice plate handle (paddle).

NOTES -

1) * Company name changed from Washington Public Power Supply System (WPPSS) to Energy Northwest in 1999.
2) The fabricated/machined replacement restricting orifice plate for SW-FE-35A was installed in accordance with ASME Section XI Plan No 2-1925.

PLAN No 2-1924

ENERGY NORTHWEST
People·Vision·Solutions

FORM NIS-2 OWNER'S REPORT FOR REPAIRS OR REPLACEMENTS (Back)

8 Tests Conducted: Hydrostatic [ ] Pneumatic [ ] Nominal Operating Pressure [ ] None [X]
Test Pressure: Psig — Test Temperature: °F
Component Design Pressure: Psig — Temperature: °F

9. Remarks (Applicable Manufacturer's Data Reports to be attached): None

CERTIFICATE OF COMPLIANCE

We certify that the statements made in this Owner's Report are correct and this replacement conforms to the rules of the ASME Code, Section XI.
Type Code Symbol Stamp: Not Applicable
Certificate Of Authorization No.: Not Applicable
Expiration Date: Not Applicable

Prepared By Kuldip Singh — Kuldip Singh - Program Lead Engineer (PLE)
Date 6/13/05

Signed By Kuldip Singh — Kuldip Singh - Program Lead Engineer (PLE)
Date 6/13/05

CERTIFICATE OF INSERVICE INSPECTION

I, the undersigned, holding a valid commission issued by the National Board of Boiler and Pressure Vessel Inspectors and the State of Washington and employed by Hartford Steam Boiler Of Connecticut of Hartford, Connecticut have inspected the components described in this Owner's Report during the period 2/3/2005 to 6/16/2005 and state to the best of my knowledge and belief, the Owner has performed examinations and taken corrective measures described in this Owner's Report in accordance with the requirements of the ASME Code, Section XI.
By signing this certificate neither the Inspector nor his employer makes any warranty, expressed or implied, concerning the examinations and corrective measures described in this Owner's Report. Furthermore, neither the Inspector nor his employer shall be liable in any manner for any personal injury or property damage or a loss of any kind arising from or connected with this inspection.

Inspector's Signature — Commissions 10655W A, B, N, I
National Board, State, and Endorsements

Date 6/16/2005

PLAN No 2-1925

ENERGY NORTHWEST
People·Vision·Solutions

FORM NIS-2 OWNER'S REPORT FOR REPAIRS OR REPLACEMENTS
As Required By The Provisions Of The ASME Code Section XI

Date: 06/13/05
Sheet: 1 Of 1
Unit: Not Applicable

1. **Owner:** Energy Northwest
   Address: Columbia Generating Station, North Power Plant Loop, Richland, Washington, 99352
2. **Plant:** Columbia Generating Station
   Address: Columbia Generating Station, North Power Plant Loop, Richland, Washington, 99352
3. **(a) Work Performed By:** Energy Northwest
   (b) Repair Organization P.O. No, Job No, etc.: Energy Northwest
   (c) Type Code Symbol Stamp: Not Applicable
   (d) Certificate Of Authorization No.: Not Applicable
   (e) Expiration Date: Not Applicable
4. **Identification Of System:** Service Water (SW) System
5. **(a) Applicable Construction Code:** ASME Section III, Code Class 3, 1971 Edition with Winter 1973 Addenda, Code Case: None
   (b) Applicable Edition Of ASME Section XI Utilized For Repairs Or Replacements: 1989 Edition with no Addenda, Code Case: N-416-1
6. **Identification Of Components Repaired Or Replaced And Replacement Components**

Name Of Component	Name Of Manufacturer	Manufacturer's Serial No	National Board No	Other I.D.	Year Built	Repaired, Replaced Or Replacement	ASME Code Stamped (Yes Or No) Code Class
SW(21)-2	WPPSS*	SW(21)-2-P1	N/A	N/A	1983	----------	Yes, Code Class 3

7. **Description Of Work Performed:** Replaced existing restricting orifice plate for SW-FE-35A. The replacement work was performed as follows:
   1) Removed existing restricting orifice plate.
   2) Installed replacement restricting orifice plate.
   3) Installed replacement studs associated with restricting plate orifice bolted flanged joint.
   4) Installed replacement nuts associated with restricting orifice plate bolted flanged joint.
   5) Performed VT-2 visual examination during pressure test to confirm pressure boundary integrity of the bolted flanged joint. No evidence of leakage during the pressure test.

NOTES -

1) * Company name changed from Washington Public Power Supply System (WPPSS) to Energy Northwest in 1999.
2) The replacement restricting orifice plate for SW-FE-35A was previously fabricated in accordance with ASME Section XI Plan No 2-1924.

PLAN No 2-1925

ENERGY NORTHWEST
People·Vision·Solutions

FORM NIS-2 OWNER'S REPORT FOR REPAIRS OR REPLACEMENTS (Back)

8 Tests Conducted: Hydrostatic [ ] *Pneumatic* [ ] *Nominal Operating Pressure* [X] *None* [ ]

Test Pressure: 56 Psig *Test Temperature:* 54° F

Component Design Pressure: 309 Psig *Temperature:* 150° F

9. Remarks (Applicable Manufacturer's Data Reports to be attached): None

CERTIFICATE OF COMPLIANCE

We certify that the statements made in this Owner's Report are correct and this replacement *conforms to the rules of the ASME Code, Section XI.*

Type Code Symbol Stamp: Not Applicable

Certificate Of Authorization No.: Not Applicable

Expiration Date: Not Applicable

Prepared By Kuldip Singh - Program Lead Engineer (PLE) *Signed By* Kuldip Singh - Program Lead Engineer (PLE)

Date 6/13/05 *Date* 6/13/05

CERTIFICATE OF INSERVICE INSPECTION

I, the undersigned, holding a valid commission issued by the National Board of Boiler and Pressure Vessel Inspectors and the State of Washington *and employed by* Hartford Steam Boiler Of Connecticut of Hartford, Connecticut *have inspected the components described in this Owner's Report during the period* 2/3/2005 *to* 6/16/2005 *and state to the best of my knowledge and belief, the Owner has performed examinations and taken corrective measures described in this Owner's Report in accordance with the requirements of the ASME Code, Section XI.*

By signing this certificate neither the Inspector nor his employer makes any warranty, expressed or implied, concerning the examinations and corrective measures described in this Owner's Report. Furthermore, neither the Inspector nor his employer shall be liable in any manner for any personal injury or property damage or a loss of any kind arising from or connected with this inspection.

Inspector's Signature *Commissions* 10655W A, B, N, I
National Board, State, and Endorsements

Date 6/16/2005

PLAN No 2-1926

ENERGY NORTHWEST
People·Vision·Solutions

FORM NIS-2 OWNER'S REPORT FOR REPAIRS OR REPLACEMENTS
As Required By The Provisions Of The ASME Code Section XI

Date: 07/02/05
Sheet: 1 Of 2
Unit: Not Applicable

1. **Owner:** Energy Northwest
   Address: Columbia Generating Station, North Power Plant Loop, Richland, Washington, 99352
2. **Plant:** Columbia Generating Station
   Address: Columbia Generating Station, North Power Plant Loop, Richland, Washington, 99352
3. **(a) Work Performed By:** Energy Northwest
   (b) Repair Organization P.O. No, Job No, etc.: Energy Northwest
   (c) Type Code Symbol Stamp: Not Applicable
   (d) Certificate Of Authorization No.: Not Applicable
   (e) Expiration Date: Not Applicable
4. **Identification Of System:** Main Steam (MS) System
5. **(a) Applicable Construction Code:** ASME Section III, Code Class 1, 1971 Edition with Winter 1973 Addenda, Code Case: None
   (b) Applicable Edition Of ASME Section XI Utilized For Repairs Or Replacements: 1989 Edition with no Addenda, Code Case: None
6. **Identification Of Components Repaired Or Replaced And Replacement Components**

Name Of Component	Name Of Manufacturer	Manufacturer's Serial No	National Board No	Other I.D.	Year Built	Repaired, Replaced Or Replacement	ASME Code Stamped (Yes Or No) Code Class
B22-G001D	WPPSS*	B22-G001D-P1	N/A	N/A	1983	----------	Yes, Code Class 1
MS-RV-2D	Crosby	N63790-03-0052 (N63790-00-0052)	N/A	N/A	1980	Replaced	Yes, Code Class 1
MS-RV-2D	Crosby	N63790-03-0054 (N63790-00-0054)	N/A	N/A	1980	Replacement	Yes, Code Class 1

7. **Description Of Work Performed:** Replaced existing relief valve MS-RV-2D The replacement work was performed as follows:
   1) Removed twelve (12) existing standard (regular) nuts for the relief valve inlet joint.
   2) Removed sixteen (16) existing standard (regular) bolts for the relief valve outlet joint.
   3) Removed existing relief valve Serial No N63790-03-0052 (N63790-00-0052) with set pressure of 1185 Psig at rated temperature of 575°F.
   4) Performed VT-1 visual examination on twelve (12) new "Superbolt" nuts for the relief valve inlet joint. VT-1 visual examination results acceptable.
   5) Performed VT-1 visual examination on eight (8) new "Jackbolts" associated with new "Superbolt" nuts for the relief valve inlet joint. VT-1 visual examination results acceptable.
   6) Installed replacement relief valve with Serial No N63790-03-0054 (N63790-00-0054) with set pressure of 1185 Psig at rated temperature of 575° F.
   7) Installed VT-1 visually examined twelve (12) new "Superbolts" nuts for the relief valve inlet joint. Note - None of the existing standard (regular) nuts were reused.
   8) Installed VT-1 visually examined eight (8) new "Jackbolts" associated with new "Superbolt" nuts for the relief valve inlet joint.
   9) Installed sixteen (16) new "Superbolt" bolts for the relief valve outlet joint. Note - None of the existing standard (regular) bolts were reused.
   10) Performed VT-2 visual examination during pressure test to confirm pressure boundary integrity of the relief valve inlet joint. No evidence of leakage during the pressure test.

NOTES -

1) * Company name changed from Washington Public Power Supply System (WPPSS) to Energy Northwest in 1999.
2) The existing ASME Code Stamped piping system in which the replacement relief valve Serial No N63790-03-0054 (N63790-00-0054) was installed is Main Steam (MS) piping system B22-G001D-P1. This piping system is certified to comply with ASME Section III, Code Class 1, 1971 Edition with Winter 1973 Addenda requirements

Continued On Sheet 2 of 2

PLAN No 2-1926

ENERGY NORTHWEST
People·Vision·Solutions

FORM NIS-2 OWNER'S REPORT FOR REPAIRS OR REPLACEMENTS (Back)

8 Tests Conducted: Hydrostatic ☐ *Pneumatic* ☐ *Nominal Operating Pressure* ☐ *Other* ☒

Test Pressure: 1020 Psig *Test Temperature:* 170° F

Component Design Pressure: 1250 Psig *Temperature:* 575° F

9. Remarks (Applicable Manufacturer's Data Reports to be attached): 1) See attached NVR-1 Code Data Report for replacement relief valve Serial No N63790-03-0054, 2) See attached NV-1 (Pre - Modification) Code Data Report for relief valve Serial No N63790-00-0054, 3) * The test pressure and the test temperature on the relief valve inlet joint was recorded during ASME Section XI pressure test which was performed in accordance with PPM No OSP-RPV-R801 "Reactor Pressure Vessel Leakage Test".

CERTIFICATE OF COMPLIANCE

We certify that the statements made in this Owner's Report are correct and this replacement *conforms to the rules of the ASME Code, Section XI.*

Type Code Symbol Stamp: Not Applicable

Certificate Of Authorization No.: Not Applicable

Expiration Date: Not Applicable

Prepared By Kuldip Singh - Program Lead Engineer (PLE) *Signed By* Kuldip Singh - Program Lead Engineer (PLE)

Date 7/7/05 *Date* 7/7/05

CERTIFICATE OF INSERVICE INSPECTION

I, the undersigned, holding a valid commission issued by the National Board of Boiler and Pressure Vessel Inspectors and the State of Washington *and employed by* Hartford Steam Boiler Of Connecticut of Hartford, Connecticut *have inspected the components described in this Owner's Report during the period* 2-15-2005 *to* 7-6-2005 *and state to the best of my knowledge and belief, the Owner has performed examinations and taken corrective measures described in this Owner's Report in accordance with the requirements of the ASME Code, Section XI.*

By signing this certificate neither the Inspector nor his employer makes any warranty, expressed or implied, concerning the examinations and corrective measures described in this Owner's Report. Furthermore, neither the Inspector nor his employer shall be liable in any manner for any personal injury or property damage or a loss of any kind arising from or connected with this inspection.

Inspector's Signature *Commissions* 10655W A, B, N, I
National Board, State, and Endorsements

Date 7-6-2005

PLAN No 2-1926

ENERGY NORTHWEST
People·Vision·Solutions

FORM NIS-2 OWNER'S REPORT FOR REPAIRS OR REPLACEMENTS
As Required By The Provisions Of The ASME Code Section XI

Date: 07/02/05
Sheet: 2 Of 2
Unit: Not Applicable

1. **Owner:** Energy Northwest
   Address: Columbia Generating Station, North Power Plant Loop, Richland, Washington, 99352
2. **Plant:** Columbia Generating Station
   Address: Columbia Generating Station, North Power Plant Loop, Richland, Washington, 99352
3. **(a) Work Performed By:** Energy Northwest
   (b) Repair Organization P.O. No, Job No, etc.: Energy Northwest
   (c) Type Code Symbol Stamp: Not Applicable
   (d) Certificate Of Authorization No.: Not Applicable
   (e) Expiration Date: Not Applicable
4. **Identification Of System:** Main Steam (MS) System
5. **(a) Applicable Construction Code:** ASME Section III, Code Class 1, 1971 Edition with Winter 1973 Addenda, Code Case: None
   (b) Applicable Edition Of ASME Section XI Utilized For Repairs Or Replacements: 1989 Edition with no Addenda, Code Case: None
6. **Identification Of Components Repaired Or Replaced And Replacement Components**

Name Of Component	Name Of Manufacturer	Manufacturer's Serial No	National Board No	Other I.D.	Year Built	Repaired, Replaced Or Replacement	ASME Code Stamped (Yes Or No) Code Class
B22-G001D	WPPSS*	B22-G001D-P1	N/A	N/A	1983	----------	Yes, Code Class 1
MS-RV-2D	Crosby	N63790-03-0052 (N63790-00-0052)	N/A	N/A	1980	Replaced	Yes, Code Class 1
MS-RV-2D	Crosby	N63790-03-0054 (N63790-00-0054)	N/A	N/A	1980	Replacement	Yes, Code Class 1

7. **Description Of Work Performed:**

Notes Continuation From Sheet 1 of 2

NOTES -

3) The existing ASME Code Stamped piping system applicable to the relief valve outlet side is certified to comply with ASME Section III, Code Class 3, 1971 Edition with Winter 1973 Addenda requirements.
4) The replacement relief valve Serial No N63790-03-0054 (N63790-00-0054) is certified to comply with ASME Section III, Code Class 1, 1971 Edition with no Addenda requirements.
5) The relief valve serial numbers in parenthesis are the old (original) serial numbers. The relief valve serial numbers with out the parenthesis are the serial numbers of relief valves previously modified (upgraded) by NWS Technologies, LLC, 131 Venture Boulevard, Spartanburg, SC 29301. The modification (upgrading) work on the relief valves was performed in accordance with NWS Technologies, LLC VR and NR programs.

PLAN No. 2-1926.

FORM NVR-1 REPORT OF REPAIR ☒ REPLACEMENT ☒ OF NUCLEAR PRESSURE RELIEF DEVICES

1. Work performed by: NWS Technologies, LLC Purchase Order # 0000313236 7/12/05
131 Venture Boulevard, Spartanburg, SC 29306

2. Work performed for: Energy Northwest - Columbia Generating Station

3/4. Owner - name, address and identification of nuclear power plant: Energy Northwest - Columbia Generating Station, North Power Plant Loop, Richland, WA 99352-0968

5. a: Repaired pressure relief device: Main Steam Safety Relief Valve
b: Name of manufacturer: Crosby Valve & Gage Co.
c: Identifying nos.

(type)	(mfr's S/N)	(NB#)	(service)	(size)	(yr.built)
HB-65-BP-FN	new s/n: N63790-03-0054	N/A	steam	6 x 10	1980

d: Construction Code:

(name/section/division)	(edition)	(addenda)	(Code Cases(s))	(Code Class)
ASME Sec. III Div. 1	1971	N/A	N/A	1

6. ASME Code Section XI applicable for inservice inspection:

(edition)	(addenda)	(Code Case(s))
1989	N/A	N/A

7. ASME Code Section XI used for repairs, replacements:

(edition)	(addenda)	(Code Case(s))
1989	N/A	N/A

8. Construction Code used for repairs, replacements:

(edition)	(addenda)	(Code Case(s))
1971	N/A	N/A

9. Design responsibilities: N/A MS-RV-2D

10. Opening pressure: 1185 psig
Set-pressure adjustment made at: NWS Technologies, LLC using steam

11. Description of work (include name and identifying number of replacement parts): See attachment 1.

12. Remarks: See attachment 1.

CERTIFICATE OF COMPLIANCE

I, Cesar V. Sierra certify that to the best of my knowledge and belief the statements made in this report are correct and the repair, modification or replacement of the pressure relief devices described above conforms to Section XI of the ASME Code and the National Board Inspection Code "VR" and "NR" rules.
National Board Certificate of Authorization No. 632 to use the "VR" stamp expires April 3, 2006.
National Board Certificate of Authorization No. 81 to use the "NR" stamp expires April 9, 2006.

Date	Repair Organization	Authorized representative	Title
1/14/05	NWS Technologies, LLC	Cesar Sierra	Manager, QA

CERTIFICATE OF INSPECTION

I, Charles F. Toegel Jr. holding a valid commission issued by The National Board of Boiler and Pressure Vessel Inspectors and certificate of competency issued by the jurisdiction of North Carolina and employed by Hartford Steam Boiler of CT of Hartford, CT have inspected the repair, modification or replacement described in this report on 14 JAN. 2005 and state that to the best of my knowledge and belief, this repair, modification or replacement has been completed in accordance with Section XI of the of the ASME Code and the National Board Inspection Code "VR" and "NR" rules.
By signing this certificate, neither the undersigned nor my employer makes any warranty, expressed or implied, concerning this repair, modification or replacement described in this report. Furthermore, neither the undersigned nor my employer shall be liable in any manner for any personal injury, property damage or loss of any kind arising from or connected with this inspection.

Date	Inspector's Signature	Commissions (NB (incl endorsements), jurisdiction,& no.)
1/14/05	Charles F. Toegel Jr.	NB # 8462, A, N, I NC# 1073

FORM NVR-1 Attachment 1 (Page 1 of 1)

1. Work performed by: **NWS Technologies, LLC** Purchase Order # 0000313236
131 Venture Boulevard, Spartanburg, SC 29301

2. Work performed for: Energy Northwest - Columbia Generating Station

3/4. Owner - name, address and identification of nuclear power plant: Energy Northwest - Columbia Generating Station, North Power Plant Loop, Richland, WA 99352-0968

Valve S/N: **N63790-03-0054**

11. Description of work:
NWS Traveler # 03-169
The valve was disassembled. The nozzle and disc were replaced and the disc ring was machined as part of the flexi-disc modification. The nozzle had been machined previously by CGS personnel to the new flexi-disc dimensions.
New disc: N97499-31-0003 was installed.
Nozzle: N97498-55-0171 was installed.
Both disc and nozzle were polished by NWS prior to installation.

Other parts replaced during the repair include:

Disc Holder Spiral Pins (2):	MC 54407794
Eductor Gasket:	MC 56230461
Inlet Stud(s):	n/a
Ring Pin Gasket(s) 2:	MC 56221543
Disc Pin:	MC 54400402

After reassembly, the valve set-pressure was certified using steam as the lift medium.
A final steam seat tightness test was then done at 93% of set-pressure.
A CGS/OEM tag was placed on the valve signifying the flexi-disc modification.
This tag changes the middle 2 digits of the S/N from -00- to -03-.
The NWS NR/VR nameplate uses the new S/N N63790-03-0054

1/14/05 — Date
NWS Technologies, LLC — (repair organization)
(authorized representative)
Manager, QA — (title)

1/14/05 — Date
Inspector's Signature
NB# 8462, A,N,I NC# 1073
Commissions (NB (incl endorsements), jurisdiction,& no.)

PLAN NO. 2-1926

CROSBY

CROSBY VALVE & GAGE COMPANY
WRENTHAM, MASS.

7/2/050.C.-44D

FORM NV-1 FOR SAFETY AND SAFETY RELIEF VALVES
As Required by the Provisions of the ASME Code Rules

DATA REPORT
Safety and Safety Relief Valves

MS-RV-2D

1. Manufactured By Crosby Valve & Gage Company, 43 Kendrick St., Wrentham, MA 02093
Name and Address

Model No. HB-65-BP-FN Order No. N94275 Contract Date 4/24/79 National Board No. N/A

2. Manufactured For General Electric Company, 175 Curtner Ave., San Jose, CA 95125 Order No. 205-AJ986
Name and Address

3. Owner Washington Public Power Supply System, Richland, Washington 99352
Name and Address

4. Location of Plant Hanford Reservation, Richland, Washington 99352

5. Valve Identification MPL #B22-F013 Serial No. N63790-00-0054 Drawing No. DS-A-63790 Rev. C

Type Safety Relief (Safety, Safety Relief, Pilot, Power Actuated) Orifice Size R Inch Pipe Size -- Inlet 6 Outlet 10 Inch

FOR INFORMATION ONLY

6. Set Pressure (psig) 1185 575° F
Rated Temperature

Stamped Capacity 891,750 @ 3 %Overpressure -- Blowdown (psig) 2% to 11%

Hydrostatic Test (psig) Inlet 2370 Outlet 975 psig (Assembled Valve) 1100 psig (Body Only)
(Applicable to Valves for Closed Systems Only)

Pressure Retaining Pieces

	Serial No. Identification	Material Specification Including Type or Grade
a. Bar Stock & Forgings		
Body	N93183-35-0073	ASTM A105-71 Gr. II ASME SA105 Gr. II
Bonnet	N93407-35-0036	ASTM A105-71 Gr. II ASME SA105 Gr. II
b.		
Disc Insert	N93185-34-0086	ASME SA637 Gr. 718
Nozzle	N93184-33-0058	ASME SA182 Gr. F316
Disc Holder*K55484-35-0090	*N89714-34-0090	AMS 5662B
Spring Washers K62858-35-0036	K62856-35-0092 K62857-35-0057	ASTM A105-71 Gr. II ASME SA105 Gr. II
Adjusting Bolt	N93410-33-0061	ASME SA193 Gr. B6
Spindle Point K62873-35-0054	*N89720-34-0093	ASTM A564-71 Type 630 ASME SA564 Type 630
c. Spring K62858-35-0036	NX2689-0117	ASTM A304-66 Gr. 4161H
d. Bolting		7X00380137
e. Spindle Ball K62873-35-0054	N93213-0054	Stellite #6
Thrust Bearing Adapter	N93409-32-0056	ASME SA193 Gr. B6
Bonnet Stud (J17)	N93207-0645 thru 0656	ASTM A193-71 Gr. B7 ASME SA193 Gr. B7
Bonnet Stud Nut (J87)	N93210-0865 thru 0876	ASME SA194 Gr. 2H
Inlet Stud (BW6)	N93216-0647 thru 0658	ASTM A193-71 Gr. B7 ASME SA193 Gr. B7
Inlet Stud Nut (BW8)	N93218-0651 thru 0662	ASTM A194-71 Gr. 2H ASME SA194 Gr. 2H
Adjusting Bolt Button	N93411-33-0063	ASME SA193 Gr. B6

Valve originally built against Crosby Order No. N103600, Assembly No. N56000. Valve modification consists of replacement of the Disc Insert, Nozzle, Bonnet Stud Nuts, Adjusting Bolt, and Thrust Bearing Adapter, remachining of the Body, Spring Washers, Bonnet, and Spindle Assembly, and adding an Adjusting Bolt Button Assembly. New Serialization is required unless indicated by an asterisk.
Original nameplate removed and new nameplate attached.

N63790-00-0054

CERTIFICATE OF COMPLIANCE

We certify that the statements made in this report are correct and that this valve conforms to the rules of construction of the ASME Code for Nuclear Power Plant Components, Section III, Div. 1, 1971 Edition, Addenda No Addenda (Date), Code Case No. 1567 & 1711.
Class 1

Date 11-5-80 Signed Crosby Valve & Gage Co. (N Certificate Holder) by R.G. Casavant

Our ASME Certificate of Authorization No. 1878 to use the NV symbol expires September 30, 1983 (Date).

CERTIFICATION OF DESIGN

Design information on file at Crosby Valve & Gage Company
Stress analysis report (Class 1 only) on file at Crosby Valve & Gage Company
43 Kendrick Street, Wrentham, Massachusetts 02093
Design specifications certified by[1] Boyd P. Brooks
PE State California Reg. No. 13655
Stress report certified by[1] W.D. Greenlaw
PE State Massachusetts Reg. No. 14784

[1]Signature not required - list name only.

FOR INFORMATION ONLY

CERTIFICATE OF SHOP INSPECTION

I, the undersigned, holding a valid commission issued by the National Board of Boiler and Pressure Vessel Inspectors and the State or Province of Massachusetts and employed by Factory Mutual Systems* of Norwood, Massachusetts have inspected the pump, or valve, described in this Data Report on 11/19, 1980 and state that to the best of my knowledge and belief, the N Certificate Holder has constructed this pump, or valve, in accordance with the ASME Code for Nuclear Power Plant Components.

By signing this certificate, neither the Inspector nor his employer makes any warrant, expressed or implied, concerning the equipment described in this Data Report. Furthermore, neither the Inspector nor his employer shall be liable in any manner for any personal injury or property damage or a loss of any kind arising from or connected with this inspection.

Date 11/19 1980.
Signed John E. Morris (Inspector) Commissions MASS 1266 (Nat'l. Bd., State, Prov. and No.)

*Arkwright-Boston Manufacturers Mutual Insurance Company - Mutual Boiler & Machinery Div.

ZX00380138

PLAN No 2-1927

ENERGY NORTHWEST
People·Vision·Solutions

FORM NIS-2 OWNER'S REPORT FOR REPAIRS OR REPLACEMENTS
As Required By The Provisions Of The ASME Code Section XI

Date: 07/02/05
Sheet: 1 Of 2
Unit: Not Applicable

1. **Owner:** Energy Northwest
   Address: Columbia Generating Station, North Power Plant Loop, Richland, Washington, 99352
2. **Plant:** Columbia Generating Station
   Address: Columbia Generating Station, North Power Plant Loop, Richland, Washington, 99352
3. **(a) Work Performed By:** Energy Northwest
   (b) Repair Organization P.O. No, Job No, etc.: Energy Northwest
   (c) Type Code Symbol Stamp: Not Applicable
   (d) Certificate Of Authorization No.: Not Applicable
   (e) Expiration Date: Not Applicable
4. **Identification Of System:** Main Steam (MS) System
5. **(a) Applicable Construction Code:** ASME Section III, Code Class 1, 1971 Edition with Winter 1973 Addenda, Code Case: None
   (b) Applicable Edition Of ASME Section XI Utilized For Repairs Or Replacements: 1989 Edition with no Addenda, Code Case: None
6. **Identification Of Components Repaired Or Replaced And Replacement Components**

Name Of Component	Name Of Manufacturer	Manufacturer's Serial No	National Board No	Other I.D.	Year Built	Repaired, Replaced Or Replacement	ASME Code Stamped (Yes Or No) Code Class
B22-G001C	WPPSS*	B22-G001C-P1	N/A	N/A	1983	----------	Yes, Code Class 1
MS-RV-4C	Crosby	N63790-03-0055 (N63790-00-0055)	N/A	N/A	1980	Replaced	Yes, Code Class 1
MS-RV-4C	Crosby	N63790-03-0056 (N63790-00-0056)	N/A	N/A	1980	Replacement	Yes, Code Class 1

7. **Description Of Work Performed:** Replaced existing relief valve MS-RV-4C The replacement work was performed as follows:
   1) Removed twelve (12) existing standard (regular) nuts for the relief valve inlet joint.
   2) Removed sixteen (16) existing standard (regular) bolts for the relief valve outlet joint.
   3) Removed existing relief valve Serial No N63790-03-0055 (N63790-00-0055) with set pressure of 1195 Psig at rated temperature of 575°F.
   4) Performed VT-1 visual examination on twelve (12) new "Superbolt" nuts for the relief valve inlet joint. VT-1 visual examination results acceptable.
   5) Performed VT-1 visual examination on eight (8) new "Jackbolts" associated with new "Superbolt" nuts for the relief valve inlet joint. VT-1 visual examination results acceptable.
   6) Installed replacement relief valve with Serial No N63790-03-0056 (N63790-00-0056) with set pressure of 1195 Psig at rated temperature of 575° F.
   7) Installed VT-1 visually examined twelve (12) new "Superbolts" nuts for the relief valve inlet joint. Note - None of the existing standard (regular) nuts were reused.
   8) Installed VT-1 visually examined eight (8) new "Jackbolts" associated with new "Superbolt" nuts for the relief valve inlet joint.
   9) Installed sixteen (16) new "Superbolt" bolts for the relief valve outlet joint. Note - None of the existing standard (regular) bolts were reused.
   10) Performed VT-2 visual examination during pressure test to confirm pressure boundary integrity of the relief valve inlet joint. No evidence of leakage during the pressure test.

NOTES -

1) * Company name changed from Washington Public Power Supply System (WPPSS) to Energy Northwest in 1999.
2) The existing ASME Code Stamped piping system in which the replacement relief valve Serial No N63790-03-0056 (N63790-00-0056) was installed is Main Steam (MS) piping system B22-G001C-P1. This piping system is certified to comply with ASME Section III, Code Class 1, 1971 Edition with Winter 1973 Addenda requirements

Continued On Sheet 2 of 2

PLAN No 2-1927

ENERGY NORTHWEST
People·Vision·Solutions

FORM NIS-2 OWNER'S REPORT FOR REPAIRS OR REPLACEMENTS (Back)

8 Tests Conducted: Hydrostatic ☐ *Pneumatic* ☐ *Nominal Operating Pressure* ☐ *Other* ☐

Test Pressure: 1020 Psig *Test Temperature:* 170° F
Component Design Pressure: 1250 Psig *Temperature:* 575° F

9. Remarks (Applicable Manufacturer's Data Reports to be attached): 1) See attached NVR-1 Code Data Report for replacement relief valve Serial No N63790-03-0056, 2) See attached NV-1 (Pre - Modification) Code Data Report for relief valve Serial No N63790-00-0056, 3) * The test pressure and the test temperature on the relief valve inlet joint was recorded during ASME Section XI pressure test which was performed in accordance with PPM No OSP-RPV-R801 "Reactor Pressure Vessel Leakage Test".

CERTIFICATE OF COMPLIANCE

We certify that the statements made in this Owner's Report are correct and this replacement *conforms to the rules of the ASME Code, Section XI.*
Type Code Symbol Stamp: Not Applicable
Certificate Of Authorization No.: Not Applicable
Expiration Date: Not Applicable

Prepared By Kuldip Singh - Program Lead Engineer (PLE) *Signed By* Kuldip Singh - Program Lead Engineer (PLE)

Date 7/7/05 *Date* 7/7/05

CERTIFICATE OF INSERVICE INSPECTION

I, the undersigned, holding a valid commission issued by the National Board of Boiler and Pressure Vessel Inspectors and the State of Washington *and employed by* Hartford Steam Boiler Of Connecticut of Hartford, Connecticut *have inspected the components described in this Owner's Report during the period* 2-15-2005 *to* 7-6-2005 *and state to the best of my knowledge and belief, the Owner has performed examinations and taken corrective measures described in this Owner's Report in accordance with the requirements of the ASME Code, Section XI.*
By signing this certificate neither the Inspector nor his employer makes any warranty, expressed or implied, concerning the examinations and corrective measures described in this Owner's Report. Furthermore, neither the Inspector nor his employer shall be liable in any manner for any personal injury or property damage or a loss of any kind arising from or connected with this inspection.

Inspector's Signature *Commissions* 10655W A, B, N, I
National Board, State, and Endorsements

Date 7-6-2005

PLAN No 2-1927

ENERGY NORTHWEST
People·Vision·Solutions

FORM NIS-2 OWNER'S REPORT FOR REPAIRS OR REPLACEMENTS
As Required By The Provisions Of The ASME Code Section XI

1. Owner: Energy Northwest
Address: Columbia Generating Station, North Power Plant Loop, Richland, Washington, 99352
2. Plant: Columbia Generating Station
Address: Columbia Generating Station, North Power Plant Loop, Richland, Washington, 99352

Date: 07/02/05
Sheet: 2 Of 2
Unit: Not Applicable

3. (a) Work Performed By: Energy Northwest
(b) Repair Organization P.O. No, Job No, etc.: Energy Northwest
(c) Type Code Symbol Stamp: Not Applicable
(d) Certificate Of Authorization No.: Not Applicable
(e) Expiration Date: Not Applicable
4. Identification Of System: Main Steam (MS) System
5. (a) Applicable Construction Code: ASME Section III, Code Class 1, 1971 Edition with Winter 1973 Addenda, Code Case: None
(b) Applicable Edition Of ASME Section XI Utilized For Repairs Or Replacements: 1989 Edition with no Addenda, Code Case: None
6. Identification Of Components Repaired Or Replaced And Replacement Components

Name Of Component	Name Of Manufacturer	Manufacturer's Serial No	National Board No	Other I.D.	Year Built	Repaired, Replaced Or Replacement	ASME Code Stamped (Yes Or No) Code Class
B22-G001C	WPPSS*	B22-G001D-P1	N/A	N/A	1983	----------	Yes, Code Class 1
MS-RV-4C	Crosby	N63790-03-0055 (N63790-00-0055)	N/A	N/A	1980	Replaced	Yes, Code Class 1
MS-RV-4C	Crosby	N63790-03-0056 (N63790-00-0056)	N/A	N/A	1980	Replacement	Yes, Code Class 1

7. Description Of Work Performed:

Notes Continuation From Sheet 1 of 2

NOTES -

3) The existing ASME Code Stamped piping system applicable to the relief valve outlet side is certified to comply with ASME Section III, Code Class 3, 1971 Edition with Winter 1973 Addenda requirements.
4) The replacement relief valve Serial No N63790-03-0056 (N63790-00-0056) is certified to comply with ASME Section III, Code Class 1, 1971 Edition with no Addenda requirements.
5) The relief valve serial numbers in parenthesis are the old (original) serial numbers. The relief valve serial numbers with out the parenthesis are the serial numbers of relief valves previously modified (upgraded) by NWS Technologies, LLC, 131 Venture Boulevard, Spartanburg, SC 29301. The modification (upgrading) work on the relief valves was performed in accordance with NWS Technologies, LLC VR and NR programs.

PLAN No. 2-1927

FORM NVR-1 REPORT OF REPAIR ☒ REPLACEMENT ☒ OF NUCLEAR PRESSURE RELIEF DEVICES

1. Work performed by: NWS Technologies, LLC Purchase Order # 0000313236 7/2/05
131 Venture Boulevard, Spartanburg, SC 29306

2. Work performed for: Energy Northwest - Columbia Generating Station MS-RV-4C

3/4. Owner - name, address and identification of nuclear power plant: Energy Northwest - Columbia Generating Station, North Power Plant Loop, Richland, WA 99352-0968

5. a: Repaired pressure relief device: Main Steam Safety Relief Valve
b: Name of manufacturer: Crosby Valve & Gage Co.
c: Identifying nos.

(type)	(mfr's S/N)	(NB#)	(service)	(size)	(yr.built)
HB-65-BP-FN	new s/n: N63790-03-0056	N/A	steam	6 x 10	1980

d: Construction Code:

(name/section/division)	(edition)	(addenda)	(Code Cases(s))	(Code Class)
ASME Sec. III Div. 1	1971	N/A	N/A	1

6. ASME Code Section XI applicable for inservice inspection:

(edition)	(addenda)	(Code Case(s))
1989	N/A	N/A

7. ASME Code Section XI used for repairs, replacements:

(edition)	(addenda)	(Code Case(s))
1989	N/A	N/A

8. Construction Code used for repairs, replacements:

(edition)	(addenda)	(Code Case(s))
1971	N/A	N/A

9. Design responsibilities: N/A

10. Opening pressure: 1195 psig
Set-pressure adjustment made at: NWS Technologies, LLC using steam

11. Description of work (include name and identifying number of replacement parts): See attachment 1.

12. Remarks: See attachment 1.

CERTIFICATE OF COMPLIANCE

I, Cesar V. Sierra certify that to the best of my knowledge and belief the statements made in this report are correct and the repair, modification or replacement of the pressure relief devices described above conforms to Section XI of the ASME Code and the National Board Inspection Code "VR" and "NR" rules.
National Board Certificate of Authorization No. 632 to use the "VR" stamp expires April 3, 2006.
National Board Certificate of Authorization No. 81 to use the "NR" stamp expires April 9, 2006.

Date	Repair Organization	Authorized representative	Title
1/14/05	NWS Technologies, LLC	Cesar Sierra	Manager, QA

CERTIFICATE OF INSPECTION

I, Charles F. Toegel Jr. holding a valid commission issued by The National Board of Boiler and Pressure Vessel Inspectors and certificate of competency issued by the jurisdiction of North Carolina and employed by Hartford Steam Boiler of CT of Hartford, CT have inspected the repair, modification or replacement described in this report on 14 JAN 2005 and state that to the best of my knowledge and belief, this repair, modification or replacement has been completed in accordance with Section XI of the of the ASME Code and the National Board Inspection Code "VR" and "NR" rules.
By signing this certificate, neither the undersigned nor my employer makes any warranty, expressed or implied, concerning this repair, modification or replacement described in this report. Furthermore, neither the undersigned nor my employer shall be liable in any manner for any personal injury, property damage or loss of any kind arising from or connected with this inspection.

Date	Inspector's Signature	Commissions (NB (incl endorsements), jurisdiction,& no.)
1/14/05	Charles F. Toegel Jr.	NB # 8462, A, N, I NC# 1073

FORM NVR-1 Attachment 1 (Page 1 of 1)

1. Work performed by: NWS Technologies, LLC Purchase Order # 0000313236
131 Venture Boulevard, Spartanburg, SC 29301

2. Work performed for: Energy Northwest - Columbia Generating Station

3/4. Owner - name, address and identification of nuclear power plant: Energy Northwest - Columbia Generating Station, North Power Plant Loop, Richland, WA 99352-0968

Valve S/N: N63790-03-0056

11. Description of work:
NWS Traveler # 03-170
The valve was disassembled. The nozzle and disc were replaced and the disc ring was machined as part of the flexi-disc modification. The nozzle had been machined previously by CGS personnel to the new flexi-disc dimensions.
New disc: N97499-33-0025 was installed.
Nozzle: N97498-55-0173 was installed.
Both disc and nozzle were polished by NWS prior to installation.

Other parts replaced during the repair include:

Disc Holder Spiral Pins (2):	MC 54407794
Eductor Gasket:	MC 56230461
Inlet Stud(s) 1:	MC 54400514
Ring Pin Gasket(s) 2:	MC 56221543
Disc Pin:	MC 54400402

After reassembly, the valve set-pressure was certified using steam as the lift medium.
A final steam seat tightness test was then done at 93% of set-pressure.
A CGS/OEM tag was placed on the valve signifying the flexi-disc modification.
This tag changes the middle 2 digits of the S/N from -00- to -03-.
The NWS NR/VR nameplate uses the new S/N N63790-03-0056

1/14/05 NWS Technologies, LLC Manager, QA
Date (repair organization) (authorized representative) (title)

1/14/05 Inspector's Signature NB# 8462, A,N,I NC# 1073
Date Commissions (NB (incl endorsements), jurisdiction,& no.)

PLAN No. 2-1927

CROSBY

CROSBY VALVE & GAGE COMPANY
WRENTHAM, MASS

Q.C.-44D

FORM NV-1 FOR SAFETY AND SAFETY RELIEF VALVES
As Required by the Provisions of the ASME Code Rules

DATA REPORT
Safety and Safety Relief Valves

MS-RV-4C

1. Manufactured By Crosby Valve & Gage Company, 43 Kendrick St., Wrentham, MA 02093
Name and Address

Model No. HB-65-BP-FN Order No. N94275 Contract Date 4/24/79 National Board No. N/A

2. Manufactured For General Electric Company, 175 Curtner Ave., San Jose, CA 95125 Order No. 205-AJ986
Name and Address

3. Owner Washington Public Power Supply System, Richland, Washington 99352
Name and Address

4. Location of Plant Hanford Reservation, Richland, Washington 99352

5. Valve Identification MPL #B22-F013 Serial No. N63790-00-0056 Drawing No. DS-A-63790 Rev. C

Type Safety Relief (Safety, Safety Relief, Pilot, Power Actuated) Orifice Size R Inch Pipe Size -- Inch Inlet 6 Inch Outlet 10 Inch

6. Set Pressure (psig) 1195 575° F
Rated Temperature

Stamped Capacity 899,185 @ 3 % Overpressure -- Blowdown (psig) 2% to 11%

Hydrostatic Test (psig) Inlet 2370 Outlet 975 psig (Assembled Valve) 1100 psig (Body Only)
(Applicable to Valves for Closed Systems Only)

Pressure Retaining Pieces

	Serial No. Identification	Material Specification Including Type or Grade
a. Bar Stock & Forgings		
Body	N93183-35-0075	ASTM A105 -71 Gr. II ASME SA105 Gr. II
Bonnet	N93407-35-0038	ASTM A105 -71 Gr. II ASME SA105 Gr. II
b.		
Disc Insert	N93185-34-0088	ASME SA637 Gr. 718
Nozzle	N93184-33-0060	ASME SA182 Gr. F316
Disc Holder *K55484-35-0096	*N89714-34-0107	AMS 5662B
Spring Washers K62858-35-0038	K62856-35-0094 K62857-35-0059	ASTM A105-71 Gr. II ASME SA105 Gr. II
Adjusting Bolt	N93410-33-0063	ASME SA193 Gr. B6
Spindle Point K62873-35-0056	*N89720-34-0069	ASTM A564-71 Type 630 ASME SA564 Type 630
c. Spring K62858-35-0038	*N89722-0014	ASTM A304-66 Gr. 4161H
d. Bolting		7X00380146
e. Spindle Ball K62873-35-0056	N93213-0056	Stellite #6
Thrust Bearing Adapter	N93409-32-0058	ASME SA193 Gr. B6
Bonnet Stud (I17)	N93207-0669 thru 0680	ASTM A193-71 Gr. B7 ASME SA193 Gr. B7
Bonnet Stud Nut (J87)	N93210-0889 thru 0900	ASME SA194 Gr. 2H
Inlet Stud (BW6)	N93216-0671 thru 0682	ASTM A193-71 Gr. B7 ASME SA193 Gr. B7
Inlet Stud Nut (BW8)	N93218-0675 thru 0686	ASTM A194-71 Gr. 2H ASME SA194 Gr. 2H
Adjusting Bolt Button K63618-33-0065	N93411-33-0065	ASME SA193 Gr. B6

Valve originally built against Crosby Order No. N103600, Assembly No. N56000. Valve modification consists of replacement of the Disc Insert, Nozzle, Bonnet Stud Nuts, Adjusting Bolt, and Thrust Bearing Adapter, remachining of the Body, Spring Washers, Bonnet, and Spindle Assembly, and adding an Adjusting Bolt Button Assembly. New Serialization is required unless indicated by an asterisk.
Original nameplate removed and new nameplate attached.

N103790-00-0056

CERTIFICATE OF COMPLIANCE

We certify that the statements made in this report are correct and that this valve conforms to the rules of construction of the ASME Code for Nuclear Power Plant Components, Section III, Div. 1, 1971 Edition, Addenda No Addenda (Date), Code Case No. 1567 & 1711.

Class 1

Date 11-5-80 Signed Crosby Valve & Gage Co. (N Certificate Holder) by R.G. Cassavant

Our ASME Certificate of Authorization No. 1878 to use the NV symbol expires September 30, 1983 (Date).

CERTIFICATION OF DESIGN

Design information on file at Crosby Valve & Gage Company

Stress analysis report (Class 1 only) on file at Crosby Valve & Gage Company 43 Kendrick Street, Wrentham, Massachusetts 02093

Design specifications certified by[1] Boyd P. Brooks

PE State California Reg. No. 13655

Stress report certified by[1] W.D. Greenlaw

PE State Massachusetts Reg. No. 14784

[1]Signature not required - list name only.

DATA INFORMATION ONLY

CERTIFICATE OF SHOP INSPECTION

I, the undersigned, holding a valid commission issued by the National Board of Boiler and Pressure Vessel Inspectors and the State or Province of Massachusetts and employed by Factory Mutual Systems* of Norwood, Massachusetts have inspected the pump, or valve, described in this Data Report on 11/18, 1980 and state that to the best of my knowledge and belief, the N Certificate Holder has constructed this pump, or valve, in accordance with the ASME Code for Nuclear Power Plant Components.

By signing this certificate, neither the Inspector nor his employer makes any warrant, expressed or implied, concerning the equipment described in this Data Report. Furthermore, neither the Inspector nor his employer shall be liable in any manner for any personal injury or property damage or a loss of any kind arising from or connected with this inspection.

Date 11/18 1980.

Signed John E. Morris (Inspector) Commissions MASS 1266 (Nat'l. Bd., State, Prov. and No.)

*Arkwright-Boston Manufacturers Mutual Insurance Company - Mutual Boiler & Machinery Div.

ZX00380147

PLAN No 2-1928

ENERGY NORTHWEST
People·Vision·Solutions

FORM NIS-2 OWNER'S REPORT FOR REPAIRS OR REPLACEMENTS
As Required By The Provisions Of The ASME Code Section XI

Date: 07/15/05
Sheet: 1 Of 1
Unit: Not Applicable

1. **Owner:** Energy Northwest
   Address: Columbia Generating Station, North Power Plant Loop, Richland, Washington, 99352
2. **Plant:** Columbia Generating Station
   Address: Columbia Generating Station, North Power Plant Loop, Richland, Washington, 99352
3. **(a) Work Performed By:** Energy Northwest
   (b) Repair Organization P.O. No, Job No, etc.: Energy Northwest
   (c) Type Code Symbol Stamp: Not Applicable
   (d) Certificate Of Authorization No.: Not Applicable
   (e) Expiration Date: Not Applicable
4. **Identification Of System:** Service Water (SW) System
5. **(a) Applicable Construction Code:** ASME Section III, Code Class 3, 1971 Edition with Winter 1973 Addenda, Code Case: None
   (b) Applicable Edition Of ASME Section XI Utilized For Repairs Or Replacements: 1989 Edition with no Addenda, Code Case: N-416-1
6. **Identification Of Components Repaired Or Replaced And Replacement Components**

Name Of Component	Name Of Manufacturer	Manufacturer's Serial No	National Board No	Other I.D.	Year Built	Repaired, Replaced Or Replacement	ASME Code Stamped (Yes Or No) Code Class
SW(21)-2-UG	WPPSS*	SW(21)-2-UG-P1	N/A	N/A	1983	----------	Yes, Code Class 3

7. **Description Of Work Performed:** Replaced existing Service Water (SW) piping material downstream SW-RO-1A (SW-FE-1A). The replacement work was performed as follows:
   1) Removed existing piping material.
   2) Beveled cut pipe ends.
   3) Installed new section of 18" of pipe.
   4) Completed the root pass on both the 18" circumferential butt welds.
   5) Performed visual examination on the root pass on both the 18" circumferential butt welds. Visual examination results acceptable.
   6) Performed liquid penetrant (PT) examination on the root pass for both the welds. The liquid penetrant (PT) examination results acceptable.
   7) Completed both the 18" circumferential butt welds.
   8) Performed visual examination on both the final 18" circumferential butt welds. Visual examination results acceptable
   9) Performed liquid penetrant (PT) examination on both the final 18" circumferential butt welds. Liquid penetrant (PT) examination results acceptable.
   10) Installed replacement piping material such as sockolet, pipe.
   11) Made required welds.
   12) Performed visual examination on the final welds. Visual examination results acceptable.
   13) Performed VT-2 visual examination during pressure test to confirm pressure boundary integrity of the joints. No evidence of leakage during the pressure test.

NOTES -

1) * Company name changed from Washington Public Power Supply System (WPPSS) to Energy Northwest in 1999.
2) The liquid penetrant (PT) examination on the root pass for both the 18" welds was performed in accordance with the requirements of ASME Section III, Code Class 3, 1992 Edition with no Addenda to satisfy the requirements outlined in Code Case N-416-1.
3) The liquid penetrant (PT) examination on the final 18" circumferential butt welds was performed in accordance with the requirements of ASME Section III, Code Class 3, 1992 Edition with no Addenda to satisfy the requirements outlined in Code Case N-416-1.
4) The VT-2 visual examination during pressure test to confirm pressure boundary integrity of the joints was performed in accordance with the requirements of ASME Section XI, 1992 Edition with no Addenda to satisfy the requirements outlined in Code Case N-416-1.

PLAN No 2-1928

ENERGY NORTHWEST
People·Vision·Solutions

FORM NIS-2 OWNER'S REPORT FOR REPAIRS OR REPLACEMENTS (Back)

8 Tests Conducted: Hydrostatic [ ] Pneumatic [ ] Nominal Operating Pressure [X] Other [ ]

Test Pressure: 215 Psig
Component Design Pressure: 309 Psig
Test Temperature: 63° F
Temperature: 150° F

9. Remarks (Applicable Manufacturer's Data Reports to be attached): None

CERTIFICATE OF COMPLIANCE

We certify that the statements made in this Owner's Report are correct and this replacement conforms to the rules of the ASME Code, Section XI.
Type Code Symbol Stamp: Not Applicable
Certificate Of Authorization No.: Not Applicable
Expiration Date: Not Applicable

Prepared By Kuldip Singh - Program Lead Engineer (PLE) Signed By Kuldip Singh - Program Lead Engineer (PLE)

Date 7/15/05 Date 7/15/05.

CERTIFICATE OF INSERVICE INSPECTION

I, the undersigned, holding a valid commission issued by the National Board of Boiler and Pressure Vessel Inspectors and the State of Washington and employed by Hartford Steam Boiler Of Connecticut of Hartford, Connecticut have inspected the components described in this Owner's Report during the period 3-31-2005 to 7-20-2005 and state to the best of my knowledge and belief, the Owner has performed examinations and taken corrective measures described in this Owner's Report in accordance with the requirements of the ASME Code, Section XI.
By signing this certificate neither the Inspector nor his employer makes any warranty, expressed or implied, concerning the examinations and corrective measures described in this Owner's Report. Furthermore, neither the Inspector nor his employer shall be liable in any manner for any personal injury or property damage or a loss of any kind arising from or connected with this inspection.

Inspector's Signature Commissions 10655W A, B, N, I
National Board, State, and Endorsements

Date 7-20-2005

PLAN No 2-1929

ENERGY NORTHWEST
People·Vision·Solutions

FORM NIS-2 OWNER'S REPORT FOR REPAIRS OR REPLACEMENTS
As Required By The Provisions Of The ASME Code Section XI

Date: 07/07/05
Sheet: 1 Of 1
Unit: Not Applicable

1. **Owner:** Energy Northwest
   Address: Columbia Generating Station, North Power Plant Loop, Richland, Washington, 99352
2. **Plant:** Columbia Generating Station
   Address: Columbia Generating Station, North Power Plant Loop, Richland, Washington, 99352
3. (a) **Work Performed By:** Energy Northwest
   (b) **Repair Organization P.O. No, Job No, etc.:** Energy Northwest
   (c) **Type Code Symbol Stamp:** Not Applicable
   (d) **Certificate Of Authorization No.:** Not Applicable
   (e) **Expiration Date:** Not Applicable
4. **Identification Of System:** Service Water (SW) System
5. (a) **Applicable Construction Code:** ASME Section III, Code Class 3, 1971 Edition with Winter 1973 Addenda, Code Case: None
   (b) **Applicable Edition Of ASME Section XI Utilized For Repairs Or Replacements:** 1989 Edition with no Addenda, Code Case: N-416-1
6. **Identification Of Components Repaired Or Replaced And Replacement Components**

Name Of Component	Name Of Manufacturer	Manufacturer's Serial No	National Board No	Other I.D.	Year Built	Repaired, Replaced Or Replacement	ASME Code Stamped (Yes Or No) Code Class
SW(22)-2-UG	WPPSS*	SW(22)-2-UG-P1	N/A	N/A	1983	----------	Yes, Code Class 3

7. **Description Of Work Performed:** Replaced existing Service Water (SW) piping material downstream SW-RO-1B (SW-FE-1B). The replacement work was performed as follows:
   1) Removed existing piping material.
   2) Beveled cut pipe ends.
   3) Installed new section of 18" of pipe.
   4) Completed the root pass on both the 18" circumferential butt welds.
   5) Performed visual examination on the root pass on both the 18" circumferential butt welds. Visual examination results acceptable.
   6) Performed liquid penetrant (PT) examination on the root pass for both the welds. The liquid penetrant (PT) examination results acceptable.
   7) Completed both the 18" circumferential butt welds.
   8) Performed visual examination on both the final 18" circumferential butt welds. Visual examination results acceptable
   9) Performed liquid penetrant (PT) examination on both the final 18" circumferential butt welds. Liquid penetrant (PT) examination results acceptable.
   10) Installed replacement piping material such as sockolet, pipe.
   11) Made required welds.
   12) Performed visual examination on the final welds. Visual examination results acceptable.
   13) Performed VT-2 visual examination during pressure test to confirm pressure boundary integrity of the joints. No evidence of leakage during the pressure test.

NOTES -

1) * Company name changed from Washington Public Power Supply System (WPPSS) to Energy Northwest in 1999.
2) The liquid penetrant (PT) examination on the root pass for both the 18" welds was performed in accordance with the requirements of ASME Section III, Code Class 3, 1992 Edition with no Addenda to satisfy the requirements outlined in Code Case N-416-1.
3) The liquid penetrant (PT) examination on the final 18" circumferential butt welds was performed in accordance with the requirements of ASME Section III, Code Class 3, 1992 Edition with no Addenda to satisfy the requirements outlined in Code Case N-416-1.
4) The VT-2 visual examination during pressure test to confirm pressure boundary integrity of the joints was performed in accordance with the requirements of ASME Section XI, 1992 Edition with no Addenda to satisfy the requirements outlined in Code Case N-416-1.

PLAN No 2-1929

ENERGY NORTHWEST
People·Vision·Solutions

FORM NIS-2 OWNER'S REPORT FOR REPAIRS OR REPLACEMENTS (Back)

8 Tests Conducted: Hydrostatic [ ] Pneumatic [ ] Nominal Operating Pressure [X] Other [ ]

Test Pressure: 204 Psig
Component Design Pressure: 309 Psig
Test Temperature: 58° F
Temperature: 150° F

9. Remarks (Applicable Manufacturer's Data Reports to be attached): None

CERTIFICATE OF COMPLIANCE

We certify that the statements made in this Owner's Report are correct and this replacement conforms to the rules of the ASME Code, Section XI.
Type Code Symbol Stamp: Not Applicable
Certificate Of Authorization No.: Not Applicable
Expiration Date: Not Applicable

Prepared By Kuldip Singh - Program Lead Engineer (PLE) Signed By Kuldip Singh - Program Lead Engineer (PLE)

Date 7/7/05 Date 7/7/05

CERTIFICATE OF INSERVICE INSPECTION

I, the undersigned, holding a valid commission issued by the National Board of Boiler and Pressure Vessel Inspectors and the State of Washington and employed by Hartford Steam Boiler Of Connecticut of Hartford, Connecticut have inspected the components described in this Owner's Report during the period 3-29-2005 to 7-11-2005 and state to the best of my knowledge and belief, the Owner has performed examinations and taken corrective measures described in this Owner's Report in accordance with the requirements of the ASME Code, Section XI.
By signing this certificate neither the Inspector nor his employer makes any warranty, expressed or implied, concerning the examinations and corrective measures described in this Owner's Report. Furthermore, neither the Inspector nor his employer shall be liable in any manner for any personal injury or property damage or a loss of any kind arising from or connected with this inspection.

Inspector's Signature Commissions 10655W B, B, N, I
National Board, State, and Endorsements

Date 7-11-2005

PLAN No 2-1931

ENERGY NORTHWEST
People·Vision·Solutions

FORM NIS-2 OWNER'S REPORT FOR REPAIRS OR REPLACEMENTS
As Required By The Provisions Of The ASME Code Section XI

1. Owner: Energy Northwest
Address: Columbia Generating Station, North Power Plant Loop, Richland, Washington, 99352
2. Plant: Columbia Generating Station
Address: Columbia Generating Station, North Power Plant Loop, Richland, Washington, 99352

Date: 07/14/05
Sheet: 1 Of 2
Unit: Not Applicable

3. (a) Work Performed By: Energy Northwest
(b) Repair Organization P.O. No, Job No, etc.: Energy Northwest
(c) Type Code Symbol Stamp: Not Applicable
(d) Certificate Of Authorization No.: Not Applicable
(e) Expiration Date: Not Applicable
4. Identification Of System: Residual Heat Removal (RHR) System
5. (a) Applicable Construction Code: ASME Section III, Code Class 2, 1971 Edition with Winter 1973 Addenda, Code Case: None
(b) Applicable Edition Of ASME Section XI Utilized For Repairs Or Replacements: 1989 Edition with no Addenda, Code Case: N-416-1
6. Identification Of Components Repaired Or Replaced And Replacement Components

Name Of Component	Name Of Manufacturer	Manufacturer's Serial No	National Board No	Other I.D.	Year Built	Repaired, Replaced Or Replacement	ASME Code Stamped (Yes Or No) Code Class
RHR(1)-2C	WPPSS*	RHR(1)-2C-P1	N/A	N/A	1983	----------	Yes, Code Class 2
RHR-V-84C	Borg Warner**	20214	N/A	N/A	1977	Replaced	Yes, Code Class 1
RHR-V-84C	Flowserve**	37BAY	N/A	N/A	2005	Replacement	Yes, Code Class 1
RHR-V-85C	Borg Warner**	20218	N/A	N/A	1977	Replaced	Yes, Code Class 1
RHR-V-85C	Flowserve**	41BAY	N/A	N/A	2005	Replacement	Yes, Code Class 1

7. Description Of Work Performed: Replaced existing valve RHR-V-84C and valve RHR-V-85C. The replacement work was performed as follows:

1) Removed existing valve RHR-V-84C, Serial No 20214.
2) Removed existing valve RHR-V-85C, Serial No 20218.
3) Removed existing piping material associated with valve RHR-V-84C and valve RHR-V-85C.
4) Beveled cut pipe ends.
5) Installed replacement piping material such as elbow and pipe.
6) Installed replacement valve RHR-V-84C, Serial No 37BAY.
7) Installed replacement valve RHR-V-85C, Serial No 41BAY.
7) Made required circumferential butt welds.
8) Performed visual examination on the final circumferential butt welds. Visual examination results acceptable.
9) Performed radiographic (RT) examination on the final circumferential butt welds. Radiographic (RT) examination results acceptable accept for Weld No 6. Weld No 6 had an unacceptable radiographic (RT) examination indication. The unacceptable indication was removed by mechanical means. The cavity was prepped for liquid penetrant (PT) examination. Performed liquid penetrant (PT) examination on the final cavity surfaces. Liquid penetrant (PT) examination results acceptable. Weld repaired the cavity. Performed radiographic (RT) examination on the final repaired circumferential butt weld. Radiographic (RT) examination results acceptable
10) Performed VT-2 visual examination during pressure test to confirm pressure boundary integrity of the joints. No evidence of leakage during the pressure test.

NOTES -

1) * Company name changed from Washington Public Power Supply System (WPPSS) to Energy Northwest (EN) in 1999.
2) ** Borg Warner valves are now being manufactured by Flowserve.

Continued On Sheet 2 of 2

PLAN No 2-1931

ENERGY NORTHWEST
People·Vision·Solutions

FORM NIS-2 OWNER'S REPORT FOR REPAIRS OR REPLACEMENTS (Back)

8 Tests Conducted: Hydrostatic [ ] **Pneumatic** [ ] **Nominal Operating Pressure** [X] [ ]

Test Pressure: 300 Psig **Test Temperature:** 69° F

Component Design Pressure: 500 Psig **Temperature:** 358° F

9. Remarks (Applicable Manufacturer's Data Reports to be attached): See attached NPV-1 Code Data Reports for the following replacement valves:

EPN No	Serial No
RHR-V-84C	37BAY
RHR-V-85C	41BAY

CERTIFICATE OF COMPLIANCE

We certify that the statements made in this Owner's Report are correct and this replacement *conforms to the rules of the ASME Code, Section XI.*

Type Code Symbol Stamp: Not Applicable

Certificate Of Authorization No.: Not Applicable

Expiration Date: Not Applicable

Prepared By Kuldip Singh — Kuldip Singh - Program Lead Engineer (PLE)

Signed By Kuldip Singh — Kuldip Singh - Program Lead Engineer (PLE)

Date 7/14/05 **Date** 7/14/05

CERTIFICATE OF INSERVICE INSPECTION

I, the undersigned, holding a valid commission issued by the National Board of Boiler and Pressure Vessel Inspectors and the State of Washington *and employed by* Hartford Steam Boiler Of Connecticut of Hartford, Connecticut *have inspected the components described in this Owner's Report during the period* 4/5/2005 *to* 7-18-2005 *and state to the best of my knowledge and belief, the Owner has performed examinations and taken corrective measures described in this Owner's Report in accordance with the requirements of the ASME Code, Section XI.*

By signing this certificate neither the Inspector nor his employer makes any warranty, expressed or implied, concerning the examinations and corrective measures described in this Owner's Report. Furthermore, neither the Inspector nor his employer shall be liable in any manner for any personal injury or property damage or a loss of any kind arising from or connected with this inspection.

Inspector's Signature — **Commissions** 10655 W A, B, N, I — National Board, State, and Endorsements

Date 7-18-2005

PLAN No 2-1931

ENERGY NORTHWEST
People·Vision·Solutions

FORM NIS-2 OWNER'S REPORT FOR REPAIRS OR REPLACEMENTS
As Required By The Provisions Of The ASME Code Section XI

1. Owner: Energy Northwest
Address: Columbia Generating Station, North Power Plant Loop, Richland, Washington, 99352
2. Plant: Columbia Generating Station
Address: Columbia Generating Station, North Power Plant Loop, Richland, Washington, 99352

Date: 07/14/05
Sheet: 2 Of 2
Unit: Not Applicable

3. (a) Work Performed By: Energy Northwest
(b) Repair Organization P.O. No, Job No, etc.: Energy Northwest
(c) Type Code Symbol Stamp: Not Applicable
(d) Certificate Of Authorization No.: Not Applicable
(e) Expiration Date: Not Applicable
4. Identification Of System: Residual Heat Removal (RHR) System
5. (a) Applicable Construction Code: ASME Section III, Code Class 2, 1971 Edition with Winter 1973 Addenda, Code Case: None
(b) Applicable Edition Of ASME Section XI Utilized For Repairs Or Replacements: 1989 Edition with no Addenda, Code Case: N-416-1
6. Identification Of Components Repaired Or Replaced And Replacement Components

Name Of Component	Name Of Manufacturer	Manufacturer's Serial No	National Board No	Other I.D.	Year Built	Repaired, Replaced Or Replacement	ASME Code Stamped (Yes Or No) Code Class
RHR(1)-2C	WPPSS*	RHR(1)-2C-P1	N/A	N/A	1983	----------	Yes, Code Class 2
RHR-V-84C	Borg Warner**	20214	N/A	N/A	1977	Replaced	Yes, Code Class 1
RHR-V-84C	Flowserve**	37BAY	N/A	N/A	2005	Replacement	Yes, Code Class 1
RHR-V-85C	Borg Warner**	20218	N/A	N/A	1977	Replaced	Yes, Code Class 1
RHR-V-85C	Flowserve**	41BAY	N/A	N/A	2005	Replacement	Yes, Code Class 1

7. Description Of Work Performed:

Continuation From Sheet 1 of 2

NOTES -

3) The existing ASME Code Stamped piping system in which the replacement valve RHR-V-84C, Serial No 37BAY and replacement valve RHR-V-85C, Serial No 41BAY were installed is Residual Heat Removal (RHR) piping system RHR(1)-2C-P1. This piping system is certified to comply with ASME Section III, Code Class 2, 1971 Edition with Winter 1973 Addenda requirements.
4) The replacement valve RHR-V-84C, Serial No 37BAY and replacement valve RHR-V-85C, Serial No 41BAY are certified to comply with ASME Section III, Code Class 1, 1971 Edition with Winter 1973 Addenda requirements.
5) ASME Section III, Code Class 1 valves for ASME Section III, Code Class 2 application.
6) The radiographic (RT) examination was performed in accordance with the requirements of ASME Section III, Code Class 2, 1992 Edition with no Addenda to satisfy the requirements outlined in Code Case N-416-1.
7) The VT-2 visual examination during pressure test to confirm pressure boundary integrity of the joints was performed in accordance with the requirements of ASME Section XI, 1992 Edition with no Addenda to satisfy the requirements outlined in Code Case N-416-1.

PLAN No. 2-1931

FORM NPV-1 N CERTIFICATE HOLDERS' DATA REPORT FOR NUCLEAR PUMPS OR VALVES*

As Required by the Provisions of the ASME Code, Section III, Div. 1

1. Manufactured by Flowserve Corporation, 1900 S. Saunders St., Raleigh, NC 27603 7/12/05.
(Name and Address of N Certificate Holder)

2. Manufactured for Energy Northwest PO Box 968 Richland, WA 99352-0968
(Name and Address of Purchaser or Owner)

3. Location of Installation Columbia Generating Station Snake River Warehouse Complex, Richland, WA 99352
(Name and Address)

4. Pump or Valve Valve Nominal Inlet Size 1-1/2" (inch) Outlet Size 1-1/2" (inch)

	(a) Model No. Series No. or Type	(b) N Certificate Holder's Serial No.	(c) Canadian Registration No.	(d) Drawing No.	(e) Class	(f) Nat'l. Bd. No.	(g) Year Built
(1)	1500#	36BAY	N/A	76860-1 REV. E	1	N/A	2005
(2)	1500#	37BAY	N/A	76860-1 REV. E	1	N/A	2005
(3)	1500#	38BAY	N/A	76860-1 REV. E	1	N/A	2005
(4)	1500#	39BAY	N/A	76860-1 REV. E	1	N/A	2005
(5)							
(6)							
(7)	VALVE RHR-V-84C, S/N 37BAY.						
(8)							
(9)							
(10)							

5. 1-1/2" 1500# Y-Piston Check Valve
(Brief description of service for which equipment was designed)

**valve also meets the requirements of ASME Section III 1974 Edition Summer 1975 Addenda, Class 1 30170

6. Design Conditions 3600 (Pressure) psi 100 (Temperature) °F or Valve Pressure Class 1500 (1)

7. Cold Working Pressure 3600 psi at 100 °F.

8. Pressure Retaining Pieces

Mark No.	Material Spec. No.	Manufacturer	Remarks
(a) Castings			
M8818	AMS 5387 Gr. Cobalt 6	Tech-Cast	Disc
(b) Forgings			
82763	SA105	Larson	Body
M864	SA105	Nova	Bonnet

(1) For manually operated valves only

*Supplemental sheets in form of lists, sketches or drawings may be used provided (1) size is 8-1/2" x 11", (2) information in items 1, 2 and 5 on this Data Report is included on each sheet, and (3) each sheet is numbered and number of sheets is recorded at top of this form.

Valve S/N 36BAY through 39BAY

Mark No.	Material Spec. No.	Manufacturer	Remarks
(c) Bolting			
(d) Other Parts			

9. Hydrostatic test 5400 psi. Disk Differential test pressure 3960 psi.

CERTIFICATE OF COMPLIANCE

We certify that the statements made in this report are correct and that this pump, or valve, conforms to the rules of construction of the ASME Code for Nuclear Power Plant Components. Section III, Div. 1., Edition 1971**

Addenda Winter 1973**, Code Case No. N/A, Date 2-17-05

Signed Flowserve (N Certificate Holder) by [signature]

Our ASME Certificate of Authorization No. N-1562 to use the N (N) symbol expires 11-26-06 (Date)

CERTIFICATION OF DESIGN

Design information on file at Flowserve Corporation Raleigh, NC

Stress analysis report (Class 1 only) on file at Flowserve Corporation Raleigh, NC

Design specifications certified by (1) R. Schlosser

PE State WA Reg. No. 21701

Stress analysis certified by (1) R.S. Farrell

PE State NC Reg. No. 028656

(1) Signature not required. List name only.

CERTIFICATE OF SHOP INSPECTION

I, the undersigned, holding a valid commission issued by the National Board of Boiler and Pressure Vessel Inspectors and the State or Province of North Carolina and employed by HSB CT of Hartford Connecticut have inspected the pump, or valve, described in this Data Report on 2/17/05, and state that, to the best of my knowledge and belief, the N Certificate Holder has constructed this pump, or valve, in accordance with ASME Code, Section III.

By signing this certificate neither the Inspector nor his employer makes any warranty, expressed or implied, concerning the equipment described in this s Data Report. Furthermore, neither the Inspector nor his employer shall be liable in any manner for any personal injury or property damage or a loss of any kind arising from or connected with this Inspection.

Date 2/17/05

Signed [signature] (Inspector) Commissions NC 1421 (Nat'l Bd., State, Prov. and No.)

PLAN No. 2-1931

FORM NPV-1 N CERTIFICATE HOLDERS' DATA REPORT FOR NUCLEAR PUMPS OR VALVES*

As Required by the Provisions of the ASME Code, Section III, Div. 1

Pg. 1 of 2

1. Manufactured by Flowserve Corporation, 1900 S. Saunders St., Raleigh, NC 27603 7/12/05
(Name and Address of N Certificate Holder)

2. Manufactured for Energy Northwest PO Box 968 Richland, WA 99352-0968
(Name and Address of Purchaser or Owner)

3. Location of Installation Columbia Generating Station Snake River Warehouse Complex, Richland, WA 99352
(Name and Address)

4. Pump or Valve Valve Nominal Inlet Size 1-1/2" (inch) Outlet Size 1-1/2" (inch)

	(a) Model No. Series No. or Type	(b) N Certificate Holder's Serial No.	(c) Canadian Registration No.	(d) Drawing No.	(e) Class	(f) Nat'l. Bd. No.	(g) Year Built
(1)	1500#	41BAY	N/A	04-30166-01 Rev. B	1	N/A	2005
(2)							
(3)							
(4)	VALVE PAR-V-85C, S/N 41BAY						
(5)							
(6)							
(7)							
(8)							
(9)							
(10)							

5. 1-1/2" 1500# Y-Globe Stop Check Valve
(Brief description of service for which equipment was designed)

30166

6. Design Conditions 3600 (Pressure) psi 100 (Temperature) °F or Valve Pressure Class 1500 (1)

7. Cold Working Pressure 3600 psi at 100 °F.

8. Pressure Retaining Pieces

Mark No.	Material Spec. No.	Manufacturer	Remarks
(a) Castings			
M9640	AMS 5387	Tech-Cast	Disc
(b) Forgings			
82763	SA105	Larson	Body
21211-2	SA105	DuBose	Bonnet

(1) For manually operated valves only

*Supplemental sheets in form of lists, sketches or drawings may be used provided (1) size is 8-1/2" x 11", (2) information in Items 1, 2 and 5 on this Data Report is included on each sheet, and (3) each sheet is numbered and number of sheets is recorded at top of this form.

2

FORM NPV-1 (Back)

Valve S/N 41BAY through *****

Mark No.	Material Spec. No.	Manufacturer	Remarks
(c) Bolting			
(d) Other Parts			

9. Hydrostatic test 5400 psi. Disk Differential test pressure 3960 psi.

CERTIFICATE OF COMPLIANCE

We certify that the statements made in this report are correct and that this pump, or valve, conforms to the rules of construction of the ASME Code for Nuclear Power Plant Components. Section III, Div. 1., Edition 1971

Addenda Winter 1973, Code Case No. N/A, Date 3-8-05

Signed Flowserve (N Certificate Holder) by [signature]

Our ASME Certificate of Authorization No. N-1562 to use the N (N) symbol expires 11-26-06 (Date)

CERTIFICATION OF DESIGN

Design information on file at Flowserve Corporation Raleigh, NC

Stress analysis report (Class 1 only) on file at Flowserve Corporation Raleigh, NC

Design specifications certified by (1) R. Schlosser

PE State WA Reg. No. 21701

Stress analysis certified by (1) R.S. Farrell

PE State NC Reg. No. 028656

(1) Signature not required. List name only.

CERTIFICATE OF SHOP INSPECTION

I, the undersigned, holding a valid commission issued by the National Board of Boiler and Pressure Vessel Inspectors and the State or Province of North Carolina and employed by HSB CT of Hartford Connecticut have inspected the pump, or valve, described in this Data Report on 3 / 8 / 05, and state that, to the best of my knowledge and belief, the N Certificate Holder has constructed this pump, or valve, in accordance with ASME Code, Section III.

By signing this certificate neither the Inspector nor his employer makes any warranty, expressed or implied, concerning the equipment described in this s Data Report. Furthermore, neither the Inspector nor his employer shall be liable in any manner for any personal injury or property damage or a loss of any kind arising from or connected with this Inspection.

Date 3 / 8 / 05

Signed [signature] (Inspector) Commissions NC1421 (Nat'l Bd., State, Prov. and No.)

PLAN No 2-1946

ENERGY NORTHWEST
People·Vision·Solutions

FORM NIS-2 OWNER'S REPORT FOR REPAIRS OR REPLACEMENTS
As Required By The Provisions Of The ASME Code Section XI

1. Owner: Energy Northwest
Address: Columbia Generating Station, North Power Plant Loop, Richland, Washington, 99352
2. Plant: Columbia Generating Station
Address: Columbia Generating Station, North Power Plant Loop, Richland, Washington, 99352

Date: 01/28/05
Sheet: 1 Of 1
Unit: Not Applicable

3. (a) Work Performed By: NWS Technologies, LLC, 131 Venture Boulevard, Spartanburg, SC 29306
(b) Repair Organization P.O. No, Job No, etc.: PO No 313236
(c) Type Code Symbol Stamp: NWS Technologies, LLC, VR And NR
(d) Certificate Of Authorization No.: NWS Technologies, LLC, VR No 632 And NR No 81
(e) Expiration Date: NWS Technologies, LLC, VR - April 03, 2006 And NR - April 09, 2006
4. Identification Of System: Main Steam (MS) System
5. (a) Applicable Construction Code: ASME Section III, Code Class 1, 1971 Edition with no Addenda, Code Case: None
(b) Applicable Edition Of ASME Section XI Utilized For Repairs Or Replacements: 1989 Edition with no Addenda, Code Case: None
6. Identification Of Components Repaired Or Replaced And Replacement Components

Name Of Component	Name Of Manufacturer	Manufacturer's Serial No	National Board No	Other I.D.	Year Built	Repaired, Replaced Or Replacement	ASME Code Stamped (Yes Or No) Code Class
Spare Valve	Crosby	N63790-03-0054	N/A	N/A	1980	----------	Yes, Code Class 1
Disc Insert	Crosby	N93185-45-0158	N/A	N/A	N/A	Replaced	No, Code Class 1
Disc Insert	Crosby	N97499-31-0003	N/A	N/A	N/A	Replacement	No, Code Class 1
Nozzle	Crosby	N93184-44-0106	N/A	N/A	N/A	Replaced	No, Code Class 1
Nozzle	Crosby	N97498-55-0171	N/A	N/A	N/A	Replacement	No, Code Class 1

7. Description Of Work Performed: Spare Main Steam Relief Valve (MSRV), Serial No N63790-03-0054 was refurbished by NWS Technologies, LLC, 131 Venture Boulevard, Spartanburg, SC 29306. The work was performed in accordance with NWS Technologies, LLC VR and NR programs as follows:

1) Disassembled the relief valve to perform the required work.
2) Removed existing disc insert Serial No N93185-45-0158 from the relief valve.
3) Installed replacement (modified) disc insert Serial No N97499-31-0003 in the relief valve.
4) Removed existing nozzle Serial No N93184-44-0106 from the relief valve.
5) Installed replacement (modified) nozzle Serial No N97498-55-0171 from the relief valve.
6) Performed VT-3 visual examination on the exposed surfaces of the existing studs for the relief valve inlet joint. VT-3 visual examination results acceptable for all twelve (12) studs.
7) Performed VT-3 visual examination on the exposed surfaces of the existing studs for the relief valve body to bonnet joint. VT-3 visual examination results acceptable for all twelve (12) studs.
8) Performed VT-3 visual examination on the existing nuts for the relief valve body to bonnet joint. VT-3 visual examination results acceptable for all twelve (12) nuts.
9) Reassembled the relief valve.
10) Performed VT-2 visual examination during pressure test to confirm pressure boundary integrity of the body to bonnet joint. No evidence of leakage during the pressure test.
11) Tested the relief valve at set pressure of 1185 PSIG. Test results acceptable.

NOTES -

1) Nozzle Serial No N93184-55-0171 was previously modified (upgraded) to Serial No N97498-55-0171 by Energy Northwest in accordance with ASME Section XI Plan No 2-1692.

PLAN No 2-1946

ENERGY NORTHWEST
People·Vision·Solutions

FORM NIS-2 OWNER'S REPORT FOR REPAIRS OR REPLACEMENTS (Back)

8 Tests Conducted: Hydrostatic [ ] **Pneumatic** [X] **Nominal Operating Pressure** [ ] **None** [ ]

Test Pressure: 10 Psig **Test Temperature:** 70° F

Component Design Pressure: 1185 Psig **Temperature:** 575° F

9. Remarks (Applicable Manufacturer's Data Reports to be attached): 1) See attached NVR-1 Code Data Report "Report Of Repair And Replacement Of Nuclear Pressure Relief Devices" for Main Steam Relief Valve (MSRV), Serial No N63790-03-0054, 2) See attached NV-1 Code Data Report for Main Steam Relief Valve (MSRV), Serial No N63790-00-0054 (Post Mod Serial No N63790-03-0054), 3) Component design pressure of 1185 Psig and design temperature of 575° F is for the Main Steam Relief Valve (MSRV) set pressure and rated temperature respectively.

CERTIFICATE OF COMPLIANCE

We certify that the statements made in this Owner's Report are correct and this replacement *conforms to the rules of the ASME Code, Section XI.*

Type Code Symbol Stamp: Not Applicable

Certificate Of Authorization No.: Not Applicable

Expiration Date: Not Applicable

Prepared By Kuldip Singh - Program Lead Engineer (PLE) **Signed By** Kuldip Singh - Program Lead Engineer (PLE)

Date 1/28/05 **Date** 1/28/05

CERTIFICATE OF INSERVICE INSPECTION

I, the undersigned, holding a valid commission issued by the National Board of Boiler and Pressure Vessel Inspectors and the State of Washington *and employed by* Hartford Steam Boiler Of Connecticut of Hartford, Connecticut *have inspected the components described in this Owner's Report during the period* 1-7-05 *to* 2-15-05 *and state to the best of my knowledge and belief, the Owner has performed examinations and taken corrective measures described in this Owner's Report in accordance with the requirements of the ASME Code, Section XI.*

By signing this certificate neither the Inspector nor his employer makes any warranty, expressed or implied, concerning the examinations and corrective measures described in this Owner's Report. Furthermore, neither the Inspector nor his employer shall be liable in any manner for any personal injury or property damage or a loss of any kind arising from or connected with this inspection.

Inspector's Signature **Commissions** NB 10655 A,B,N,I 10655 W
National Board, State, and Endorsements

Date 2-15-05

FORM NVR-1 REPORT OF REPAIR ☒ REPLACEMENT ☒
OF NUCLEAR PRESSURE RELIEF DEVICES

PLAN NO. 2-194-6

1. Work performed by: **NWS Technologies, LLC** Purchase Order # 0000313236
131 Venture Boulevard, Spartanburg, SC 29306

2. Work performed for: Energy Northwest - Columbia Generating Station

3/4. Owner - name, address and identification of nuclear power plant: Energy Northwest - Columbia Generating Station, North Power Plant Loop, Richland, WA 99352-0968

5. a: Repaired pressure relief device: Main Steam Safety Relief Valve
b: Name of manufacturer: Crosby Valve & Gage Co.
c: Identifying nos.

HB-65-BP-FN	new s/n: N63790-03-0054	N/A	steam	6 x 10	1980
(type)	(mfr's S/N)	(NB#)	(service)	(size)	(yr.built)

d: Construction Code:

ASME Sec. III Div. 1	1971	N/A	N/A	1
(name/section/division)	(edition)	(addenda)	(Code Cases(s))	(Code Class)

6. ASME Code Section XI applicable for inservice inspection: 1989 (edition) N/A (addenda) N/A (Code Case(s))

7. ASME Code Section XI used for repairs, replacements: 1989 (edition) N/A (addenda) N/A (Code Case(s))

8. Construction Code used for repairs, replacements: 1971 (edition) N/A (addenda) N/A (Code Case(s))

9. Design responsibilities: N/A

10. Opening pressure: 1185 psig
Set-pressure adjustment made at: NWS Technologies, LLC using steam

11. Description of work (include name and identifying number of replacement parts): See attachment 1.

12. Remarks: See attachment 1.

CERTIFICATE OF COMPLIANCE

I, Cesar V. Sierra certify that to the best of my knowledge and belief the statements made in this report are correct and the repair, modification or replacement of the pressure relief devices described above conforms to Section XI of the ASME Code and the National Board Inspection Code "VR" and "NR" rules.
National Board Certificate of Authorization No. 632 to use the "VR" stamp expires April 3, 2006.
National Board Certificate of Authorization No. 81 to use the "NR" stamp expires April 9, 2006.

1/14/05	NWS Technologies, LLC	Cesar Sierra	Manager, QA
Date	Repair Organization	Authorized representative	Title

CERTIFICATE OF INSPECTION

I, **Charles F. Toegel Jr.** holding a valid commission issued by The National Board of Boiler and Pressure Vessel Inspectors and certificate of competency issued by the jurisdiction of **North Carolina** and employed by **Hartford Steam Boiler of CT** of Hartford, CT have inspected the repair, modification or replacement described in this report on 14 JAN. 2005 and state that to the best of my knowledge and belief, this repair, modification or replacement has been completed in accordance with Section XI of the of the ASME Code and the National Board Inspection Code "VR" and "NR" rules.
By signing this certificate, neither the undersigned nor my employer makes any warranty, expressed or implied, concerning this repair, modification or replacement described in this report. Furthermore, neither the undersigned nor my employer shall be liable in any manner for any personal injury, property damage or loss of any kind arising from or connected with this inspection.

1/14/05	Charles F. Toegel Jr.	NB # 8462, A, N, I NC# 1073
Date	Inspector's Signature	Commissions (NB (incl endorsements), jurisdiction,& no.)

FORM NVR-1 Attachment 1 (Page 1 of 1)

1. Work performed by: **NWS Technologies, LLC** Purchase Order # 0000313236
131 Venture Boulevard, Spartanburg, SC 29301

2. Work performed for: Energy Northwest - Columbia Generating Station

3/4. Owner - name, address and identification of nuclear power plant: Energy Northwest - Columbia Generating Station, North Power Plant Loop, Richland, WA 99352-0968

Valve S/N: **N63790-03-0054**

11. Description of work:
NWS Traveler # 03-169
The valve was disassembled. The nozzle and disc were replaced and the disc ring was machined as part of the flexi-disc modification. The nozzle had been machined previously by CGS personnel to the new flexi-disc dimensions.
New disc: N97499-31-0003 was installed.
Nozzle: N97498-55-0171 was installed.
Both disc and nozzle were polished by NWS prior to installation.

Other parts replaced during the repair include:

Disc Holder Spiral Pins (2):	MC 54407794
Eductor Gasket:	MC 56230461
Inlet Stud(s):	n/a
Ring Pin Gasket(s) 2:	MC 56221543
Disc Pin:	MC 54400402

After reassembly, the valve set-pressure was certified using steam as the lift medium.
A final steam seat tightness test was then done at 93% of set-pressure.
A CGS/OEM tag was placed on the valve signifying the flexi-disc modification.
This tag changes the middle 2 digits of the S/N from -00- to -03-.
The NWS NR/VR nameplate uses the new S/N N63790-03-0054

1/14/05	NWS Technologies, LLC	[signature]	Manager, QA
Date	(repair organization)	(authorized representative)	(title)
1/14/05	[signature]	NB# 8462, A,N,I NC# 1073	
Date	Inspector's Signature	Commissions (NB (incl endorsements), jurisdiction,& no.)	

~~MS-RV-2A~~

CROSBY

CROSBY VALVE & GAGE COMPANY
WRENTHAM, MASS

PLAN No. 2-1946

FORM NV-1 FOR SAFETY AND SAFETY RELIEF VALVES
As Required by the Provisions of the ASME Code Rules

Q.C.-44D

DATA REPORT
Safety and Safety Relief Valves

1. Manufactured By Crosby Valve & Gage Company, 43 Kendrick St., Wrentham, MA 02093
Name and Address

Model No. HB-65-BP-FN Order No. N94275 Contract Date 4/24/79 National Board No. N/A

2. Manufactured For General Electric Company, 175 Curtner Ave., San Jose, CA 95125 Order No. 205-AJ986
Name and Address

3. Owner Washington Public Power Supply System, Richland, Washington 99352
Name and Address

4. Location of Plant Hanford Reservation, Richland, Washington 99352

5. Valve Identification MPL #B22-F013 Serial No. N63790-00-0054 Drawing No. DS-A-63790 Rev. C

Type Safety Relief (Safety, Safety Relief, Pilot, Power Actuated) Orifice Size R Inch Pipe Size — Inlet 6 Inch Outlet 10 Inch

FOR INFORMATION ONLY

6. Set Pressure (psig) 1185 575° F
Rated Temperature

Stamped Capacity 891,750 @ 3 % Overpressure — Blowdown (psig) 2% to 11%

Hydrostatic Test (psig) Inlet 2370 Outlet 975 psig (Assembled Valve) 1100 psig (Body Only)
(Applicable to Valves for Closed Systems Only)

Pressure Retaining Pieces

	Serial No. Identification	Material Specification Including Type or Grade
a. ~~Castings~~ Bar Stock & Forgings		
Body	N93183-35-0073	ASTM A105-71 Gr. II ASME SA105 Gr. II
Bonnet	N93407-35-0036	ASTM A105-71 Gr. II ASME SA105 Gr. II
b. ~~Bar Stock & Forgings~~		
~~Soft Seat~~ Disc Insert	N93185-34-0086	ASME SA637 Gr. 718
Nozzle	N93184-33-0058	ASME SA182 Gr. F316
Disc Holder*K55484-35-0090	*N89714-34-0090	AMS 5662B
Spring Washers K62858-35-0036	K62856-35-0092 K62857-35-0057	ASTM A105-71 Gr. II ASME SA105 Gr. II
Adjusting Bolt	N93410-33-0061	ASME SA193 Gr. B6
Spindle Point K62873-35-0054	*N89720-34-0093	ASTM A564-71 Type 630 ASME SA564 Type 630
c. Spring K62858-35-0036	NX2689-0117	ASTM A304-66 Gr. 4161H
d. Bolting		7X00380137
e. ~~Xxxxxxxxxx~~ Spindle Ball K62873-35-0054	N93213-0054	Stellite #6
Thrust Bearing Adapter	N93409-32-0056	ASME SA193 Gr. B6
Bonnet Stud (I17)	N93207-0645 thru 0656	ASTM A193-71 Gr. B7 ASME SA193 Gr. B7
Bonnet Stud Nut (J87)	N93210-0865 thru 0876	ASME SA194 Gr. 2H
Inlet Stud (BW6)	N93216-0647 thru 0658	ASTM A193-71 Gr. B7 ASME SA193 Gr. B7
		ASTM A194-71 Gr. 2H

Adjusting Bolt, and Thrust Bearing Adapter, remachining of the body, spring washers, Bonnet, and Spindle Assembly, and adding an Adjusting Bolt Button Assembly. New Serialization is required unless indicated by an asterisk. Original nameplate removed and new nameplate attached.

M03790-00-0054

CERTIFICATE OF COMPLIANCE

We certify that the statements made in this report are correct and that this valve conforms to the rules of construction of the ASME Code for Nuclear Power Plant Components, Section III, Div. 1, 1971 Edition, Addenda No Addenda (Date), Code Case No. 1567 & 1711.

Class 1

Date 11-5-80 Signed Crosby Valve & Gage Co. (N Certificate Holder) by R.G. Gasowski

Our ASME Certificate of Authorization No. 1878 to use the NV symbol expires September 30, 1983 (Date).

CERTIFICATION OF DESIGN

Design information on file at Crosby Valve & Gage Company

Stress analysis report (Class 1 only) on file at Crosby Valve & Gage Company 43 Kendrick Street, Wrentham, Massachusetts 02093

Design specifications certified by[1] Boyd P. Brooks

PE State California Reg. No. 13655

Stress report certified by[1] W.D. Greenlaw

PE State Massachusetts Reg. No. 14784

[1]Signature not required - list name only.

FOR INFORMATION ONLY

CERTIFICATE OF SHOP INSPECTION

I, the undersigned, holding a valid commission issued by the National Board of Boiler and Pressure Vessel Inspectors and the State or Province of Massachusetts and employed by Factory Mutual Systems* of Norwood, Massachusetts have inspected the pump, or valve, described in this Data Report on 11/19, 1980 and state that to the best of my knowledge and belief, the N Certificate Holder has constructed this pump, or valve, in accordance with the ASME Code for Nuclear Power Plant Components.

By signing this certificate, neither the Inspector nor his employer makes any warrant, expressed or implied, concerning the equipment described in this Data Report. Furthermore, neither the Inspector nor his employer shall be liable in any manner for any personal injury or property damage or a loss of any kind arising from or connected with this inspection.

Date 11/19 1980

Signed (Inspector) Commissions MASS 1266 (Nat'l. Bd., State, Prov. and No.)

*Arkwright-Boston Manufacturers Mutual Insurance Company - Mutual Boiler & Machinery Div.

ZX00380138

PLAN No 2-1947

ENERGY NORTHWEST
People·Vision·Solutions

FORM NIS-2 OWNER'S REPORT FOR REPAIRS OR REPLACEMENTS
As Required By The Provisions Of The ASME Code Section XI

1. Owner: Energy Northwest
Address: Columbia Generating Station, North Power Plant Loop, Richland, Washington, 99352
2. Plant: Columbia Generating Station
Address: Columbia Generating Station, North Power Plant Loop, Richland, Washington, 99352

Date: 02/09/05
Sheet: 1 Of 1
Unit: Not Applicable

3. (a) Work Performed By: NWS Technologies, LLC, 131 Venture Boulevard, Spartanburg, SC 29306
(b) Repair Organization P.O. No, Job No, etc.: PO No 313236
(c) Type Code Symbol Stamp: NWS Technologies, LLC, VR And NR
(d) Certificate Of Authorization No.: NWS Technologies, LLC, VR No 632 And NR No 81
(e) Expiration Date: NWS Technologies, LLC, VR - April 03, 2006 And NR - April 09, 2006
4. Identification Of System: Main Steam (MS) System
5. (a) Applicable Construction Code: ASME Section III, Code Class 1, 1971 Edition with no Addenda, Code Case: None
(b) Applicable Edition Of ASME Section XI Utilized For Repairs Or Replacements: 1989 Edition with no Addenda, Code Case: None
6. Identification Of Components Repaired Or Replaced And Replacement Components

Name Of Component	Name Of Manufacturer	Manufacturer's Serial No	National Board No	Other I.D.	Year Built	Repaired, Replaced Or Replacement	ASME Code Stamped (Yes Or No) Code Class
Spare Valve	Crosby	N63790-03-0056	N/A	N/A	1980	----------	Yes, Code Class 1
Disc Insert	Crosby	N93185-56-0248	N/A	N/A	N/A	Replaced	No, Code Class 1
Disc Insert	Crosby	N97499-33-0025	N/A	N/A	N/A	Replacement	No, Code Class 1
Nozzle	Crosby	N93184-44-0111	N/A	N/A	N/A	Replaced	No, Code Class 1
Nozzle	Crosby	N97498-55-0173	N/A	N/A	N/A	Replacement	No, Code Class 1

7. Description Of Work Performed: Spare Main Steam Relief Valve (MSRV), Serial No N63790-03-0056 was refurbished by NWS Technologies, LLC, 131 Venture Boulevard, Spartanburg, SC 29306. The work was performed in accordance with NWS Technologies, LLC VR and NR programs as follows:

1) Disassembled the relief valve to perform the required work.
2) Removed existing disc insert Serial No N93185-56-0248 from the relief valve.
3) Installed replacement (modified) disc insert Serial No N97499-33-0025 in the relief valve.
4) Removed existing nozzle Serial No N93184-44-0111 from the relief valve.
5) Installed replacement (modified) nozzle Serial No N97498-55-0173 from the relief valve.
6) Performed VT-3 visual examination on the exposed surfaces of the existing studs for the relief valve inlet joint. VT-3 visual examination results acceptable for all eleven (11) studs. One (1) stud was replaced. See Item 11 below.
7) Performed VT-3 visual examination on the exposed surfaces of the existing studs for the relief valve body to bonnet joint. VT-3 visual examination results acceptable for all twelve (12) studs.
8) Performed VT-3 visual examination on the existing nuts for the relief valve body to bonnet joint. VT-3 visual examination results acceptable for all twelve (12) nuts.
9) Performed VT-1 visual examination on one (1) replacement nut for the relief valve inlet joint for ISI (PSI). VT-1 visual examination results acceptable.
10) Reassembled the relief valve.
11) Installed one (1) replacement stud for the relief valve inlet joint. See Note 2.
12) Performed VT-2 visual examination during pressure test to confirm pressure boundary integrity of the body to bonnet joint. No evidence of leakage during the pressure test.
13) Tested the relief valve at set pressure of 1195 PSIG. Test results acceptable.

NOTES -

1) Nozzle Serial No N93184-55-0173 was previously modified (upgraded) to Serial No N97498-55-0173 by Energy Northwest in accordance with ASME Section XI Plan No 2-1692.
2) Energy Northwest performed VT-1 visual examination on one (1) replacement stud for the relief valve inlet joint. VT-1 visual examination results acceptable.

PLAN No 2-1947

ENERGY NORTHWEST
People·Vision·Solutions

FORM NIS-2 OWNER'S REPORT FOR REPAIRS OR REPLACEMENTS (Back)

8 Tests Conducted: Hydrostatic [ ] **Pneumatic** [X] **Nominal Operating Pressure** [ ] **None** [ ]

Test Pressure: 10 Psig **Test Temperature:** 70° F

Component Design Pressure: 1195 Psig **Temperature:** 575° F

9. Remarks (Applicable Manufacturer's Data Reports to be attached): 1) See attached NVR-1 Code Data Report "Report Of Repair And Replacement Of Nuclear Pressure Relief Devices" for Main Steam Relief Valve (MSRV), Serial No N63790-03-0056, 2) See attached NV-1 Code Data Report for Main Steam Relief Valve (MSRV), Serial No N63790-00-0056 (Post Mod Serial No N63790-03-0056), 3) Component design pressure of 1195 Psig and design temperature of 575° F is for the Main Steam Relief Valve (MSRV) set pressure and rated temperature respectively.

CERTIFICATE OF COMPLIANCE

We certify that the statements made in this Owner's Report are correct and this replacement *conforms to the rules of the ASME Code, Section XI.*

Type Code Symbol Stamp: Not Applicable

Certificate Of Authorization No.: Not Applicable

Expiration Date: Not Applicable

Prepared By Kuldip Singh - Program Lead Engineer (PLE) **Signed By** Kuldip Singh - Program Lead Engineer (PLE)

Date 2/9/05 **Date** 2/9/05

CERTIFICATE OF INSERVICE INSPECTION

I, the undersigned, holding a valid commission issued by the National Board of Boiler and Pressure Vessel Inspectors and the State of Washington *and employed by* Hartford Steam Boiler Of Connecticut of Hartford, Connecticut *have inspected the components described in this Owner's Report during the period* 1-07-05 *to* 2-15-05 *and state to the best of my knowledge and belief, the Owner has performed examinations and taken corrective measures described in this Owner's Report in accordance with the requirements of the ASME Code, Section XI.*

By signing this certificate neither the Inspector nor his employer makes any warranty, expressed or implied, concerning the examinations and corrective measures described in this Owner's Report. Furthermore, neither the Inspector nor his employer shall be liable in any manner for any personal injury or property damage or a loss of any kind arising from or connected with this inspection.

Inspector's Signature **Commissions** NB 10655 A,B,N,E 10655 W
National Board, State, and Endorsements

Date 2-15-05

FORM NVR-1 REPORT OF REPAIR ☒ REPLACEMENT ☒
OF NUCLEAR PRESSURE RELIEF DEVICES PLAN No. 2-1947

1. Work performed by: **NWS Technologies, LLC** Purchase Order # 0000313236
131 Venture Boulevard, Spartanburg, SC 29306

2. Work performed for: Energy Northwest - Columbia Generating Station

3/4. Owner - name, address and identification of nuclear power plant: Energy Northwest - Columbia Generating Station, North Power Plant Loop, Richland, WA 99352-0968

5. a: Repaired pressure relief device: Main Steam Safety Relief Valve
b: Name of manufacturer: Crosby Valve & Gage Co.
c: Identifying nos.

(type)	new s/n: (mfr's S/N)	(NB#)	(service)	(size)	(yr.built)
HB-65-BP-FN	N63790-03-0056	N/A	steam	6 x 10	1980

d: Construction Code:

(name/section/division)	(edition)	(addenda)	(Code Cases(s))	(Code Class)
ASME Sec. III Div. 1	1971	N/A	N/A	1

	(edition)	(addenda)	(Code Case(s))
6. ASME Code Section XI applicable for inservice inspection:	1989	N/A	N/A
7. ASME Code Section XI used for repairs, replacements:	1989	N/A	N/A
8. Construction Code used for repairs, replacements:	1971	N/A	N/A

9. Design responsibilities: N/A

10. Opening pressure: 1195 psig
Set-pressure adjustment made at: NWS Technologies, LLC using steam

11. Description of work (include name and identifying number of replacement parts): See attachment 1.

12. Remarks: See attachment 1.

CERTIFICATE OF COMPLIANCE

I, Cesar V. Sierra certify that to the best of my knowledge and belief the statements made in this report are correct and the repair, modification or replacement of the pressure relief devices described above conforms to Section XI of the ASME Code and the National Board Inspection Code "VR" and "NR" rules.
National Board Certificate of Authorization No. 632 to use the "VR" stamp expires April 3, 2006.
National Board Certificate of Authorization No. 81 to use the "NR" stamp expires April 9, 2006.

Date	Repair Organization	Authorized representative	Title
1/14/05	NWS Technologies, LLC	Cesar Sierra	Manager, QA

CERTIFICATE OF INSPECTION

I, **Charles F. Toegel Jr.** holding a valid commission issued by The National Board of Boiler and Pressure Vessel Inspectors and certificate of competency issued by the jurisdiction of **North Carolina** and employed by **Hartford Steam Boiler of CT** of Hartford, CT have inspected the repair, modification or replacement described in this report on 14 JAN 2005 and state that to the best of my knowledge and belief, this repair, modification or replacement has been completed in accordance with Section XI of the of the ASME Code and the National Board Inspection Code "VR" and "NR" rules.
By signing this certificate, neither the undersigned nor my employer makes any warranty, expressed or implied, concerning this repair, modification or replacement described in this report. Furthermore, neither the undersigned nor my employer shall be liable in any manner for any personal injury, property damage or loss of any kind arising from or connected with this inspection.

Date	Inspector's Signature	Commissions (NB (incl endorsements), jurisdiction,& no.)
1/14/05	Charles F. Toegel Jr.	NB # 8462, A, N, I NC# 1073

FORM NVR-1 Attachment 1 (Page 1 of 1)

1. Work performed by: **NWS Technologies, LLC** Purchase Order # 0000313236
131 Venture Boulevard, Spartanburg, SC 29301

2. Work performed for: Energy Northwest - Columbia Generating Station

3/4. Owner - name, address and identification of nuclear power plant: Energy Northwest - Columbia Generating Station, North Power Plant Loop, Richland, WA 99352-0968

Valve S/N: **N63790-03-0056**

11. Description of work:
NWS Traveler # 03-170
The valve was disassembled. The nozzle and disc were replaced and the disc ring was machined as part of the flexi-disc modification. The nozzle had been machined previously by CGS personnel to the new flexi-disc dimensions.
New disc: N97499-33-0025 was installed.
Nozzle: N97498-55-0173 was installed.
Both disc and nozzle were polished by NWS prior to installation.

Other parts replaced during the repair include:

Disc Holder Spiral Pins (2):	MC 54407794
Eductor Gasket:	MC 56230461
Inlet Stud(s) 1:	MC 54400514
Ring Pin Gasket(s) 2:	MC 56221543
Disc Pin:	MC 54400402

After reassembly, the valve set-pressure was certified using steam as the lift medium.
A final steam seat tightness test was then done at 93% of set-pressure.
A CGS/OEM tag was placed on the valve signifying the flexi-disc modification.
This tag changes the middle 2 digits of the S/N from -00- to -03-.
The NWS NR/VR nameplate uses the new S/N N63790-03-0056

1/14/05 Date — NWS Technologies, LLC (repair organization) — (authorized representative) — Manager, QA (title)

1/14/05 Date — Inspector's Signature — NB# 8462, A,N,I NC# 1073 Commissions (NB (incl endorsements), jurisdiction,& no.)

PLAN No. 2-1947

CROSBY

CROSBY VALVE & GAGE COMPANY
WRENTHAM, MASS

Philip Rupp

1/28/05
Q.C.-44D

FORM NV-1 FOR SAFETY AND SAFETY RELIEF VALVES
As Required by the Provisions of the ASME Code Rules

DATA REPORT
Safety and Safety Relief Valves

1. Manufactured By Crosby Valve & Gage Company, 43 Kendrick St., Wrentham, MA 02093
Name and Address

Model No. HB-65-BP-FN Order No. N94275 Contract Date 4/24/79 National Board No. N/A

2. Manufactured For General Electric Company, 175 Curtner Ave., San Jose, CA 95125 Order No. 205-AJ986
Name and Address

3. Owner Washington Public Power Supply System, Richland, Washington 99352
Name and Address

4. Location of Plant Hanford Reservation, Richland, Washington 99352

5. Valve Identification MPL #B22-F013 Serial No. N63790-00-0056 Drawing No. DS-A-63790 Rev. C

Type Safety Relief (Safety, Safety Relief, Pilot, Power Actuated) Orifice Size R Inch Pipe Size -- Inch Inlet 6 Inch Outlet 10 Inch

6. Set Pressure (psig) 1195 575° F (Rated Temperature)

Stamped Capacity 899,185 @ 3 % Overpressure -- Blowdown (psig) 2% to 11%

Hydrostatic Test (psig) Inlet 2370 Outlet 975 psig (Assembled Valve) 1100 psig (Body Only)
(Applicable to Valves for Closed Systems Only)

Pressure Retaining Pieces

	Serial No. Identification	Material Specification Including Type or Grade
a. Bar Stock & Forgings		
Body	N93183-35-0075	ASTM A105 -71 Gr. II ASME SA105 Gr. II
Bonnet	N93407-35-0038	ASTM A105 -71 Gr. II ASME SA105 Gr. II
b.		
Disc Insert	N93185-34-0088	ASME SA637 Gr. 718
Nozzle	N93184-33-0060	ASME SA182 Gr. F316
Disc Holder *K55484-35-0096	*N89714-34-0107	AMS 5662B
Spring Washers K62858-35-0038	K62856-35-0094 K62857-35-0059	ASTM A105-71 Gr. II ASME SA105 Gr. II
Adjusting Bolt	N93410-33-0063	ASME SA193 Gr. B6
Spindle Point K62873-35-0056	*N89720-34-0069	ASTM A564-71 Type 630 ASME SA564 Type 630
c. Spring K62858-35-0038	*N89722-0014	ASTM A304-66 Gr. 4161H
d. Bolting		ZX00380146
e. Spindle Ball K62873-35-0056	N93213-0056	Stellite #6
Thrust Bearing Adapter	N93409-32-0058	ASME SA193 Gr. B6
Bonnet Stud (I17)	N93207-0669 thru 0680	ASTM A193-71 Gr. B7 ASME SA193 Gr. B7
Bonnet Stud Nut (J87)	N93210-0889 thru 0900	ASME SA194 Gr. 2H
Inlet Stud (BW6)	N93216-0671 thru 0682	ASTM A193-71 Gr. B7 ASME SA193 Gr. B7
Inlet Stud Nut (BW8)	N93218-0675 thru 0686	ASTM A194-71 Gr. 2H ASME SA194 Gr. 2H
Adjusting Bolt Button K63618-33-0065	N93411-33-0065	ASME SA193 Gr. B6

Valve originally built against Crosby Order No. N103600, Assembly No. N56000. Valve modification consists of replacement of the Disc Insert, Nozzle, Bonnet Stud Nuts, Adjusting Bolt, and Thrust Bearing Adapter, remachining of the Body, Spring Washers, Bonnet, and Spindle Assembly, and adding an Adjusting Bolt Button Assembly. New Serialization is required unless indicated by an asterisk.
Original nameplate removed and new nameplate attached.

N163790-00-0056

CERTIFICATE OF COMPLIANCE

We certify that the statements made in this report are correct and that this valve conforms to the rules of construction of the ASME Code for Nuclear Power Plant Components, Section III, Div. 1, 1971 Edition, Addenda No Addenda (Date), Code Case No. 1567 & 1711.

Class 1

Date 11-5-80 Signed Crosby Valve & Gage Co. (N Certificate Holder) by R.G. Casavant

Our ASME Certificate of Authorization No. 1878 to use the NV symbol expires September 30, 1983 (Date).

CERTIFICATION OF DESIGN

Design information on file at Crosby Valve & Gage Company

Stress analysis report (Class 1 only) on file at Crosby Valve & Gage Company 43 Kendrick Street, Wrentham, Massachusetts 02093

Design specifications certified by[1] Boyd P. Brooks

PE State California Reg. No. 13655

Stress report certified by[1] W.D. Greenlaw

PE State Massachusetts Reg. No. 14784

[1]Signature not required - list name only.

CERTIFICATE OF SHOP INSPECTION

I, the undersigned, holding a valid commission issued by the National Board of Boiler and Pressure Vessel Inspectors and the State or Province of Massachusetts and employed by Factory Mutual Systems* of Norwood, Massachusetts have inspected the pump, or valve, described in this Data Report on 11/18, 1980 and state that to the best of my knowledge and belief, the N Certificate Holder has constructed this pump, or valve, in accordance with the ASME Code for Nuclear Power Plant Components.

By signing this certificate, neither the Inspector nor his employer makes any warrant, expressed or implied, concerning the equipment described in this Data Report. Furthermore, neither the Inspector nor his employer shall be liable in any manner for any personal injury or property damage or a loss of any kind arising from or connected with this inspection.

Date 11/18 1980.

Signed John [illegible] (Inspector) Commissions MASS 1266 (Nat'l. Bd., State, Prov. and No.)

*Arkwright-Boston Manufacturers Mutual Insurance Company - Mutual Boiler & Machinery Div.

ZX00380147

PLAN No 2-1948

ENERGY NORTHWEST
People·Vision·Solutions

FORM NIS-2 OWNER'S REPORT FOR REPAIRS OR REPLACEMENTS
As Required By The Provisions Of The ASME Code Section XI

Date: 01/28/05
Sheet: 1 Of 1
Unit: Not Applicable

1. Owner: Energy Northwest
Address: Columbia Generating Station, North Power Plant Loop, Richland, Washington, 99352
2. Plant: Columbia Generating Station
Address: Columbia Generating Station, North Power Plant Loop, Richland, Washington, 99352
3. (a) Work Performed By: NWS Technologies, LLC, 131 Venture Boulevard, Spartanburg, SC 29306
(b) Repair Organization P.O. No, Job No, etc.: PO No 313236
(c) Type Code Symbol Stamp: NWS Technologies, LLC, VR And NR
(d) Certificate Of Authorization No.: NWS Technologies, LLC, VR No 632 And NR No 81
(e) Expiration Date: NWS Technologies, LLC, VR - April 03, 2006 And NR - April 09, 2006
4. Identification Of System: Main Steam (MS) System
5. (a) Applicable Construction Code: ASME Section III, Code Class 1, 1971 Edition with no Addenda, Code Case: None
(b) Applicable Edition Of ASME Section XI Utilized For Repairs Or Replacements: 1989 Edition with no Addenda, Code Case: None
6. Identification Of Components Repaired Or Replaced And Replacement Components

Name Of Component	Name Of Manufacturer	Manufacturer's Serial No	National Board No	Other I.D.	Year Built	Repaired, Replaced Or Replacement	ASME Code Stamped (Yes Or No) Code Class
Spare Valve	Crosby	N63790-03-0126	N/A	N/A	1981	----------	Yes, Code Class 1
Disc Insert	Crosby	N97499-31-0008	N/A	N/A	N/A	Replaced	No, Code Class 1
Disc Insert	Crosby	N97499-34-0032	N/A	N/A	N/A	Replacement	No, Code Class 1
Nozzle	Crosby	N97498-46-0118	N/A	N/A	N/A	Replaced	No, Code Class 1
Nozzle	Crosby	N97498-52-0165	N/A	N/A	N/A	Replacement	No, Code Class 1

7. Description Of Work Performed: Spare Main Steam Relief Valve (MSRV), Serial No N63790-03-0126 was refurbished by NWS Technologies, LLC, 131 Venture Boulevard, Spartanburg, SC 29306. The work was performed in accordance with NWS Technologies, LLC VR and NR programs as follows:

1) Disassembled the relief valve to perform the required work.
2) Removed existing disc insert Serial No N97499-31-0008 from the relief valve.
3) Installed replacement (modified) disc insert Serial No N97499-34-0032 in the relief valve.
4) Removed existing nozzle Serial No N97498-46-0118 from the relief valve.
5) Installed replacement (modified) nozzle Serial No N97498-52-0165 from the relief valve.
6) Performed VT-3 visual examination on the exposed surfaces of the existing studs for the relief valve inlet joint. VT-3 visual examination results acceptable for all twelve (12) studs.
7) Performed VT-3 visual examination on the exposed surfaces of the existing studs for the relief valve body to bonnet joint. VT-3 visual examination results acceptable for all twelve (12) studs.
8) Performed VT-3 visual examination on the existing nuts for the relief valve body to bonnet joint. VT-3 visual examination results acceptable for all twelve (12) nuts.
9) Reassembled the relief valve.
10) Performed VT-2 visual examination during pressure test to confirm pressure boundary integrity of the body to bonnet joint. No evidence of leakage during the pressure test.
11) Tested the relief valve at set pressure of 1195 PSIG. Test results acceptable.

NOTES -

1) Nozzle Serial No N93184-52-0165 was previously modified (upgraded) to Serial No N97498-52-0165 by Energy Northwest in accordance with ASME Section XI Plan No 2-1692.

PLAN No 2-1948

ENERGY NORTHWEST
People·Vision·Solutions

FORM NIS-2 OWNER'S REPORT FOR REPAIRS OR REPLACEMENTS (Back)

8 Tests Conducted: Hydrostatic [ ] **Pneumatic** [X] **Nominal Operating Pressure** [ ] **None** [ ]

Test Pressure: 10 Psig **Test Temperature:** 70° F

Component Design Pressure: 1195 Psig **Temperature:** 575° F

9. Remarks (Applicable Manufacturer's Data Reports to be attached): 1) See attached NVR-1 Code Data Report "Report Of Repair And Replacement Of Nuclear Pressure Relief Devices" for Main Steam Relief Valve (MSRV), Serial No N63790-03-0126, 2) See attached NV-1 Code Data Report for Main Steam Relief Valve (MSRV), Serial No N63790-00-0126 (Post Mod Serial No N63790-03-0126), 3) Component design pressure of 1195 Psig and design temperature of 575° F is for the Main Steam Relief Valve (MSRV) set pressure and rated temperature respectively.

CERTIFICATE OF COMPLIANCE

We certify that the statements made in this Owner's Report are correct and this replacement *conforms to the rules of the ASME Code, Section XI.*

Type Code Symbol Stamp: Not Applicable

Certificate Of Authorization No.: Not Applicable

Expiration Date: Not Applicable

Prepared By Kuldip Singh - Program Lead Engineer (PLE) **Signed By** Kuldip Singh - Program Lead Engineer (PLE)

Date 1/28/05 **Date** 1/28/05

CERTIFICATE OF INSERVICE INSPECTION

I, the undersigned, holding a valid commission issued by the National Board of Boiler and Pressure Vessel Inspectors and the State of Washington *and employed by* Hartford Steam Boiler Of Connecticut of Hartford, Connecticut *have inspected the components described in this Owner's Report during the period* 1-7-05 *to* 2-15-05 *and state to the best of my knowledge and belief, the Owner has performed examinations and taken corrective measures described in this Owner's Report in accordance with the requirements of the ASME Code, Section XI.*

By signing this certificate neither the Inspector nor his employer makes any warranty, expressed or implied, concerning the examinations and corrective measures described in this Owner's Report. Furthermore, neither the Inspector nor his employer shall be liable in any manner for any personal injury or property damage or a loss of any kind arising from or connected with this inspection.

Inspector's Signature **Commissions** NB 10655 A,B,N,I; 10655W
National Board, State, and Endorsements

Date 2-15-05

FORM NVR-1 REPORT OF REPAIR ☒ REPLACEMENT ☒
OF NUCLEAR PRESSURE RELIEF DEVICES

PLAN No. Z-1948

1. Work performed by: **NWS Technologies, LLC** Purchase Order # 0000313236
131 Venture Boulevard, Spartanburg, SC 29306

2. Work performed for: Energy Northwest - Columbia Generating Station

3/4. Owner - name, address and identification of nuclear power plant: Energy Northwest - Columbia Generating Station, North Power Plant Loop, Richland, WA 99352-0968

5. a: Repaired pressure relief device: Main Steam Safety Relief Valve
b: Name of manufacturer: Crosby Valve & Gage Co.
c: Identifying nos.

(type)	new s/n: (mfr's S/N)	(NB#)	(service)	(size)	(yr.built)
HB-65-BP-FN	N63790-03-0126	N/A	steam	6 x 10	1981

d: Construction Code:

(name/section/division)	(edition)	(addenda)	(Code Cases(s))	(Code Class)
ASME Sec. III Div. 1	1971	N/A	N/A	1

	(edition)	(addenda)	(Code Case(s))
6. ASME Code Section XI applicable for inservice inspection:	1989	N/A	N/A
7. ASME Code Section XI used for repairs, replacements:	1989	N/A	N/A
8. Construction Code used for repairs, replacements:	1971	N/A	N/A

9. Design responsibilities: N/A

10. Opening pressure: 1195 psig
Set-pressure adjustment made at: NWS Technologies, LLC using steam

11. Description of work (include name and identifying number of replacement parts): See attachment 1.

12. Remarks: See attachment 1.

CERTIFICATE OF COMPLIANCE

I, Cesar V. Sierra certify that to the best of my knowledge and belief the statements made in this report are correct and the repair, modification or replacement of the pressure relief devices described above conforms to Section XI of the ASME Code and the National Board Inspection Code "VR" and "NR" rules.
National Board Certificate of Authorization No. 632 to use the "VR" stamp expires April 3, 2006.
National Board Certificate of Authorization No. 81 to use the "NR" stamp expires April 9, 2006.

Date	Repair Organization	Authorized representative	Title
1/17/05	NWS Technologies, LLC	Cesar Sierra	Manager, QA

CERTIFICATE OF INSPECTION

I, **Charles F. Toegel Jr.** holding a valid commission issued by The National Board of Boiler and Pressure Vessel Inspectors and certificate of competency issued by the jurisdiction of **North Carolina** and employed by **Hartford Steam Boiler of CT** of Hartford, CT have inspected the repair, modification or replacement described in this report on 17 JAN 2005 and state that to the best of my knowledge and belief, this repair, modification or replacement has been completed in accordance with Section XI of the of the ASME Code and the National Board Inspection Code "VR" and "NR" rules.
By signing this certificate, neither the undersigned nor my employer makes any warranty, expressed or implied, concerning this repair, modification or replacement described in this report. Furthermore, neither the undersigned nor my employer shall be liable in any manner for any personal injury, property damage or loss of any kind arising from or connected with this inspection.

Date	Inspector's Signature	Commissions (NB (incl endorsements), jurisdiction,& no.)
1/17/05	Charles F. Toegel Jr.	NB # 8462, A, N, I NC# 1073

FORM NVR-1 Attachment 1 (Page 1 of 1)

1. Work performed by: NWS Technologies, LLC Purchase Order # 0000313236
131 Venture Boulevard, Spartanburg, SC 29301

2. Work performed for: Energy Northwest - Columbia Generating Station

3/4. Owner - name, address and identification of nuclear power plant: Energy Northwest - Columbia Generating Station, North Power Plant Loop, Richland, WA 99352-0968

Valve S/N: N63790-03-0126

11. Description of work:
NWS Traveler # 03-172
The valve was disassembled. The nozzle and disc were replaced (CEAR 05-1). The nozzle ring pin/set screw was replaced (CEAR 05-2).
New disc: N97499-34-0032 was installed.
Nozzle: N97498-52-0165 was installed.
Both disc and nozzle were polished by NWS prior to installation.

Other parts replaced during the repair include:

Disc Holder Spiral Pins (2):	MC 54407794
Eductor Gasket:	MC 56230461
Inlet Stud(s):	n/a
Ring Pin Gasket(s) 2:	MC 56221543
Disc Pin:	MC 54400402
Nozzle ring pin	MC 25520005

After reassembly, the valve set-pressure was certified using steam as the lift medium.
Due to leakage after certification testing the valve was jacked and lapped.
A final steam seat tightness test was then done at 93% of set-pressure.

1/17/05	NWS Technologies, LLC.	[signature]	Manager, QA
Date	(repair organization)	(authorized representative)	(title)
1/17/05	[signature]	NB# 8462, A,N,I NC# 1073	
Date	Inspector's Signature	Commissions (NB (incl endorsements), jurisdiction,& no.)	

PLAN No 2-1948

CROSBY

CROSBY VALVE & GAGE COMPANY
WRENTHAM, MASS

1/28/05
Q.C.-44D

FORM NV-1 FOR SAFETY AND SAFETY RELIEF VALVES
As Required by the Provisions of the ASME Code Rules

DATA REPORT
Safety and Safety Relief Valves

1. Manufactured By Crosby Valve & Gage Company, 43 Kendrick St., Wrentham, MA 02093
Name and Address

Model No. HB-65-BP-FN Order No. N94281 Contract Date 4/24/79 National Board No. N/A

2. Manufactured For General Electric Company, 175 Curtner Ave., San Jose, CA 95125 Order No. 205-AJ986
Name and Address

3. Owner Washington Public Power Supply System, Richland, Washington 99352
Name and Address

4. Location of Plant Hanford Reservation, Richland, Washington 99352

5. Valve Identification MPL #B22-F013 Serial No. N63790-00-0126 Drawing No. DS-A-63790 Rev. C

Type Safety Relief (Safety, Safety Relief, Pilot, Power Actuated) Orifice Size R Inch Pipe Size -- Inch Inlet 6 Inch Outlet 10 Inch

6. Set Pressure (psig) 1195 575° F (Rated Temperature)

Stamped Capacity 899,185 @ 3 % Overpressure -- Blowdown (psig) 2% to 11%

Hydrostatic Test (psig) Inlet 2370 Outlet 975 psig (Assembled Valve) 1100 psig (Body Only)
(Applicable to Valves for Closed Systems Only)

Pressure Retaining Pieces

	Serial No. Identification	Material Specification Including Type or Grade
a. Bar Stock & Forgings ~~Castings~~		
Body	N93183-36-0089	ASTM A105-71 Gr. II ASME SA105 Gr. II
Bonnet	N93407-36-0095	ASTM A105-71 Gr. II ASME SA105 Gr. II
b. ~~Bar Stock & Forgings~~		
~~Supports~~ Disc Insert	N93185-37-0159	ASME SA637 Gr. 718
Nozzle	N93184-33-0074	ASME SA182 Gr. F316
Disc Holder K55484-31-0002	N89714-31-0003	AMS 5662B
Spring Washers K62858-36-0105	K62856-36-0114 K62857-36-0101	ASME SA105 Gr. II
Adjusting Bolt	N93410-33-0074	ASME SA193 Gr. B6
Spindle Point K62873-37-0134	N89720-43-0154	ASME SA564 Type 630
c. Spring K62858-36-0105	*N89722-0056	ASTM A304-66 Gr. 4161H
d. Bolting		
e. ~~Castings~~ Spindle Ball K62873-37-0134	N93213-0201	Stoody #6
Thrust Bearing Adapter	N93409-32-0067	ASME SA193 Gr. B6
Bonnet Stud (BW19)	N93207-1534 thru 1545	ASTM A193-71 Gr. B7 ASME SA193 Gr. B7
Bonnet Stud Nut (J87)	N93210-1057 thru 1068	ASME SA194 Gr. 2H
Inlet Stud (BW18)	N93216-1685 thru 1696	ASTM A193-71 Gr. B7 ASME SA193 Gr. B7
Inlet Stud Nut (BW22)	N93218-1401 thru 1412	ASTM A194-71 Gr. 2H ASME SA194 Gr. 2H
Adjusting Bolt Button K63618-33-0079	N93411-33-0079	ASME SA193 Gr. B6

Valve originally built against Crosby Order No. N51727, Assembly No. N56000. Valve modification consists of replacement of the Disc Insert, Nozzle, Bonnet Stud Nuts, Adjusting Bolt, and Thrust Bearing Adapter, remachining of the Body, Spring Washers, Bonnet, and Spindle Assembly, and adding an Adjusting Bolt Button Assembly. New Serialization is required unless indicated by an asterisk.
Original nameplate removed and new nameplate attached.

N63790-00-0128

CERTIFICATE OF COMPLIANCE

We certify that the statements made in this report are correct and that this valve conforms to the rules of construction of the ASME Code for Nuclear Power Plant Components, Section III, Div. 1, 1971 Edition, Addenda No Addenda (Date), Code Case No. 1567 & 1711.

Class 1

Date 11-5-80 Signed Crosby Valve & Gage Co. (N Certificate Holder) by R. G. Carnwath

Our ASME Certificate of Authorization No. 1878 to use the NV symbol expires September 30, 1983 (Date).

CERTIFICATION OF DESIGN

Design information on file at Crosby Valve & Gage Company

Stress analysis report (Class 1 only) on file at Crosby Valve & Gage Company 43 Kendrick Street, Wrentham, Massachusetts 02093

Design specifications certified by[1] Boyd P. Brooks

PE State California Reg. No. 13655

Stress report certified by[1] W.D. Greenlaw

PE State Massachusetts Reg. No. 14784

[1]Signature not required - list name only.

CERTIFICATE OF SHOP INSPECTION

I, the undersigned, holding a valid commission issued by the National Board of Boiler and Pressure Vessel Inspectors and the State or Province of Massachusetts and employed by Factory Mutual Systems* of Norwood, Massachusetts have inspected the pump, or valve, described in this Data Report on 1/14, 1981 and state that to the best of my knowledge and belief, the N Certificate Holder has constructed this pump, or valve, in accordance with the ASME Code for Nuclear Power Plant Components.

By signing this certificate, neither the Inspector nor his employer makes any warrant, expressed or implied, concerning the equipment described in this Data Report. Furthermore, neither the Inspector nor his employer shall be liable in any manner for any personal injury or property damage or a loss of any kind arising from or connected with this inspection.

Date 1/14 19 81.

Signed John [illegible] (Inspector) Commissions MASS 1266 (Nat'l. Bd., State, Prov. and No.)

*Arkwright-Boston Manufacturers Mutual Insurance Company - Mutual Boiler & Machinery Div.

PLAN No 2-1949

ENERGY NORTHWEST
People·Vision·Solutions

FORM NIS-2 OWNER'S REPORT FOR REPAIRS OR REPLACEMENTS
As Required By The Provisions Of The ASME Code Section XI

Date: 07/13/05
Sheet: 1 Of 1
Unit: Not Applicable

1. **Owner:** Energy Northwest
   Address: Columbia Generating Station, North Power Plant Loop, Richland, Washington, 99352
2. **Plant:** Columbia Generating Station
   Address: Columbia Generating Station, North Power Plant Loop, Richland, Washington, 99352
3. **(a) Work Performed By:** Energy Northwest
   (b) Repair Organization P.O. No, Job No, etc.: Energy Northwest
   (c) Type Code Symbol Stamp: Not Applicable
   (d) Certificate Of Authorization No.: Not Applicable
   (e) Expiration Date: Not Applicable
4. **Identification Of System:** Residual Heat Removal (RHR) System
5. **(a) Applicable Construction Code:** ASME Section III, Code Class 2, 1971 Edition with Winter 1973 Addenda, Code Case: None
   (b) Applicable Edition Of ASME Section XI Utilized For Repairs Or Replacements: 1989 Edition with no Addenda, Code Case: None
6. **Identification Of Components Repaired Or Replaced And Replacement Components**

Name Of Component	Name Of Manufacturer	Manufacturer's Serial No	National Board No	Other I.D.	Year Built	Repaired, Replaced Or Replacement	ASME Code Stamped (Yes Or No) Code Class
RHR(3)-2A	WPPSS*	RHR(3)-2A-P1	N/A	N/A	1983	----------	Yes, Code Class 2
RHR(4)-1B	WPPSS*	RHR(4)-1B-P1	N/A	N/A	1983	----------	Yes, Code Class 2
RHR-RV-5	Lonergan	509258-86-1	N/A	N/A	1979	Replaced	Yes, Code Class 2
RHR-RV-5	Crosby**	N99784-00-0001	N/A	N/A	2004	Replacement	Yes, Code Class 2

7. **Description Of Work Performed:** Replaced existing relief valve RHR-V-5. The replacement work was performed as follows:
   1) Removed existing relief valve RHR-RV-5, Serial No 509258-86-1.
   2) Performed VT-3 visual examination on the existing studs for the relief valve outlet joint. VT-3 visual examination results acceptable.
   3) Performed VT-3 visual examination on the existing nuts for the relief valve outlet joint. VT-3 visual examination results acceptable.
   4) Installed replacement relief valve RHR-RV-5, Serial No N99784-00-0001.
   5) Reinstalled VT-3 visually examined existing studs and nuts for the relief valve outlet joint.
   6) Performed VT-2 visual examination during pressure test to confirm pressure boundary integrity of the relief valve outlet bolted flanged joint. No evidence of leakage during the pressure test.

NOTES -

1) * Company name changed from Washington Public Power Supply System (WPPSS) to Energy Northwest in 1999.
2) ** Anderson Greenwood Crosby
3) The existing ASME Code Stamped piping system applicable to the replacement valve RHR-RV-5, Serial No N99784-00-0001 inlet side is Residual Heat Removal (RHR) piping system RHR(3)-2A-P1. This piping system is certified to comply with ASME Section III, Code Class 2, 1971 Edition with Winter 1973 Addenda requirements.
4) The existing ASME Code Stamped piping system applicable to the replacement valve RHR-RV-5, Serial No N99784-00-0001 outlet side is Residual Heat Removal (RHR) piping system RHR(4)-1B-P1. This piping system is certified to comply with ASME Section III, Code Class 2, 1971 Edition with Winter 1973 Addenda requirements.
5) The replacement valve RHR-RV-5, Serial No N99784-00-0001 is certified to comply with ASME Section III, Code Class 2, 1995 Edition with 1996 Addenda requirements.

PLAN No 2-1949

ENERGY NORTHWEST
People·Vision·Solutions

FORM NIS-2 OWNER'S REPORT FOR REPAIRS OR REPLACEMENTS (Back)

8 Tests Conducted: Hydrostatic [ ] **Pneumatic** [ ] **Nominal Operating Pressure** [ ] **Other** [•]

Test Pressure: 38.6 Psig **Test Temperature:** 76.8° F

Component Design Pressure: 125 Psig **Temperature:** 480° F

9. Remarks (Applicable Manufacturer's Data Reports to be attached): 1) See attached NV-1 Code Data Report for the replacement relief valve RHR-RV-5, Serial No N99784-00-0001.2) * VT-2 visual examination to confirm pressure boundary integrity of the replacement relief valve RHR-RV-5, Serial No N99784-00-0001 outlet bolted flanged joint was performed during 10CFR50, Appendix J Local Leak Rate Test (LLRT). 3) Test pressure of 38.6 Psig and test temperature of 76.8° F is for relief valve outlet joint. Component design pressure of 125 Psig and design temperature of 480° F is for the relief valve outlet piping.

CERTIFICATE OF COMPLIANCE

We certify that the statements made in this Owner's Report are correct and this replacement *conforms to the rules of the ASME Code, Section XI.*

Type Code Symbol Stamp: Not Applicable

Certificate Of Authorization No.: Not Applicable

Expiration Date: Not Applicable

Prepared By Kuldip Singh - Program Lead Engineer (PLE) **Signed By** Kuldip Singh - Program Lead Engineer (PLE)

Date 7/14/05 **Date** 7/14/05

CERTIFICATE OF INSERVICE INSPECTION

I, the undersigned, holding a valid commission issued by the National Board of Boiler and Pressure Vessel Inspectors and the State of Washington *and employed by* Hartford Steam Boiler Of Connecticut of Hartford, Connecticut *have inspected the components described in this Owner's Report during the period* 3-23-2005 *to* 7-18-2005 *and state to the best of my knowledge and belief, the Owner has performed examinations and taken corrective measures described in this Owner's Report in accordance with the requirements of the ASME Code, Section XI.*

By signing this certificate neither the Inspector nor his employer makes any warranty, expressed or implied, concerning the examinations and corrective measures described in this Owner's Report. Furthermore, neither the Inspector nor his employer shall be liable in any manner for any personal injury or property damage or a loss of any kind arising from or connected with this inspection.

Inspector's Signature **Commissions** 10655W A, B, N, I
National Board, State, and Endorsements

Date 7-18-2005

PLAN NO. 2-1949

Q.C.-44E
Sheet 1 of 2

* Corrected report to add non-pressure retaining parts listed under remarks. DET 11-JAN-05

JC 1-11-05

FORM NV-1, CERTIFICATE HOLDERS' DATA REPORT FOR PRESSURE OR VACUUM RELIEF VALVES

As required by the Provisions of the ASME Code, Section III, Division 1

1. Manufactured and certified by Anderson Greenwood Crosby, 43 Kendrick St., Wrentham, MA 02093
(Name and Address of NV Certificate Holder)

Crosby Factory Order No. U835820000 Customer Order No. 00317009

2. Manufactured for ENERGY NORTHWEST
(Name and Address of Purchaser)

3. Location of Installation COLUMBIA GEN. STATION
(Name and Address)

4. Valve 9511882A (Model No./Series No.) Orifice size 0.328 (in.) Nom. Inlet size 1 (in.) Outlet size 2 (in.)

5. ASME Code, Section III, Division 1: 1995 (Edition) 1996 (Addenda Date) 2 (Class) -- (Code Case No.)

6. Type SAFETY RELIEF SPRING (Spring, Pilot or Power Operated) Valve I.D./Tag No. RHR-RV-5

183 (Set Pressure, psig) 20% OF S.P. (Blowdown, psi) 148 (Rated Relieving Temperature) 1100 (Hydro Test psig, Inlet) at 70 °F

7. Ident. N99784-00-0001 (Cert. Holder's serial no.) N/A (CRN) DS-C-99784REV. A (Drawing No.) --- (Nat'l Bd. No.) 2004 (Yr. Built)

8. Control Ring Settings RHR-RV-5. N/A

S/N N99784-00-0001

9. Pressure Retaining Items:

	Serial No. or Identification	Material Spec. Including Type or Grade	Tensile Strength (psi)
Body			
Bonnet			
Support Rods	---	---	---
Nozzle			
Disc Insert	N99595-NGDI	ASME SA479 TYPE 316	75,000
	N95899-NGDC		
Spring Washer	N95899-NGCO	ASME SA193 GR. B6	110,000
Adjusting Bolt	N95900-02-0918	ASME SA193 GR. B6	110,000
Spindle	N95898-15-0939	ASME SA193 GR. B6	110,000
Spring	NX5365-0035	ASTM A313 TYPE 316	n/a
Bolting	---	---	---
Other Items			
BASE	N99563-32-0009	ASME SA479 TYPE 316	75,000
LAP JOINT STUB END	N99564-32-0009	ASME SA182 GR. F316	70,000
LAP JOINT FLANGE	N96820-56-0084	ASME SA182 GR. F316	70,000
CYLINDER	N99593-31-0004	ASME SA105	70,000
WELD NECK FLANGE	N99592-31-0002	ASME SA105	70,000

Q.C.-44E

Form NV-1 (Back) Certificate Holder's Serial No. N99784-00-0001 Sheet 2 of 2

10. Relieving capacity 30 Gpm Water @ 70 DEG.F @ 10 overpressure as certified by the National Board 09/12/00
(steam or fluid, lb/hr) (date)

*11. Remarks: Pipe Cap AGC p/n 156223 CAJON p/n SS-2-CP - Material ASME SA182 Gr. F316
Male Connector AGC p/n 156216 CAJON p/n SS-2-TSW-1-2 Material ASME SA182 Gr.F316

The above material was procured in accordance with the 'small products' provisions of ASME Section III, Sub-article NC/ND-2600. DET 11-JAN-05

CERTIFICATE OF DESIGN

Design Specification certified by Jack R. Cole Jr. PE State WA Reg. No. 0020653

Design Report certified by Charles R. Dowd PE State MA Reg. No. 39103

CERTIFICATE OF COMPLIANCE

We certify that the statements made in this report are correct and that this valve conforms to the rules for construction of the ASME Code, Section III, Division 1. * Date: D.E.Tho Signed: 11-JAN-05

NV Certificate of Authorization No. N-1878 Expires 31-Dec-04

Date 22-OCT-04 Name Anderson Greenwood Crosby Wrentham, MA (NV Certificate Holder) Signed D.E.Tho (Authorized Representative)

CERTIFICATE OF INSPECTION

I, the undersigned, holding a valid commission issued by the National Board of Boiler and Pressure Vessel Inspectors and the State ~~or Province~~ of MA and employed by HSB-CT. of Hartford, CT have inspected the valve described in this Data Report on 10-8-, 2004 and state that to the best of my knowledge and belief, the N Certificate Holder has constructed this valve in accordance with the ASME Code, Section III, Division 1.

By signing this certificate, neither the Inspector nor his employer makes any warrant, expressed or implied, concerning the component described in this Data Report. Furthermore, neither the Inspector nor his employer shall be liable in any manner for any personal injury or property damage or a loss of any kind arising from or connected with this inspection.

Date OCT 25, '04 Signed (Authorized Inspector) Commissions MA-1420 A, N, I (Nat'l. Bd. (incl. Endorsements) and state or prov. and no.)

* Date: 1-11-05 Signed: MA 1420 ABNINS

1,2

PLAN No 2-1950

ENERGY NORTHWEST
People·Vision·Solutions

FORM NIS-2 OWNER'S REPORT FOR REPAIRS OR REPLACEMENTS
As Required By The Provisions Of The ASME Code Section XI

Date: 07/13/05
Sheet: 1 Of 1
Unit: Not Applicable

1. **Owner:** Energy Northwest
   Address: Columbia Generating Station, North Power Plant Loop, Richland, Washington, 99352
2. **Plant:** Columbia Generating Station
   Address: Columbia Generating Station, North Power Plant Loop, Richland, Washington, 99352
3. (a) **Work Performed By:** Energy Northwest
   (b) **Repair Organization P.O. No, Job No, etc.:** Energy Northwest
   (c) **Type Code Symbol Stamp:** Not Applicable
   (d) **Certificate Of Authorization No.:** Not Applicable
   (e) **Expiration Date:** Not Applicable
4. **Identification Of System:** Residual Heat Removal (RHR) System
5. (a) **Applicable Construction Code:** ASME Section III, Code Class 2, 1971 Edition with Winter 1973 Addenda, Code Case: None
   (b) **Applicable Edition Of ASME Section XI Utilized For Repairs Or Replacements:** 1989 Edition with no Addenda, Code Case: None
6. **Identification Of Components Repaired Or Replaced And Replacement Components**

Name Of Component	Name Of Manufacturer	Manufacturer's Serial No	National Board No	Other I.D.	Year Built	Repaired, Replaced Or Replacement	ASME Code Stamped (Yes Or No) Code Class
RHR(1)-2A	WPPSS*	RHR(1)-2A-P1	N/A	N/A	1983	----------	Yes, Code Class 2
RHR(4)-1A	WPPSS*	RHR(4)-1A-P1	N/A	N/A	1983	----------	Yes, Code Class 2
RHR-RV-25A	Lonergan	509258-74-1	N/A	N/A	1978	Replaced	Yes, Code Class 2
RHR-RV-25A	Crosby**	N99785-00-0001	N/A	N/A	2004	Replacement	Yes, Code Class 2

7. **Description Of Work Performed:** Replaced existing relief valve RHR-V-25A. The replacement work was performed as follows:
   1) Removed existing relief valve RHR-RV-25A, Serial No 509258-74-1.
   2) Performed VT-3 visual examination on the existing studs for the relief valve outlet joint. VT-3 visual examination results acceptable.
   3) Performed VT-3 visual examination on the existing nuts for the relief valve outlet joint. VT-3 visual examination results acceptable.
   4) Installed replacement relief valve RHR-RV-25A, Serial No N99785-00-0001.
   5) Reinstalled VT-3 visually examined existing studs and nuts for the relief valve outlet joint.
   6) Performed VT-2 visual examination during pressure test to confirm pressure boundary integrity of the relief valve outlet bolted flanged joint. Leakage was observed during the pressure test and was evaluated to be acceptable.

NOTES -

1) * Company name changed from Washington Public Power Supply System (WPPSS) to Energy Northwest in 1999.
2) ** Anderson Greenwood Crosby
3) The existing ASME Code Stamped piping system applicable to the replacement valve RHR-RV-25A, Serial No N99785-00-0001 inlet side is Residual Heat Removal (RHR) piping system RHR(1)-2A-P1. This piping system is certified to comply with ASME Section III, Code Class 2, 1971 Edition with Winter 1973 Addenda requirements.
4) The existing ASME Code Stamped piping system applicable to the replacement valve RHR-RV-25A, Serial No N99785-00-0001 outlet side is Residual Heat Removal (RHR) piping system RHR(4)-1A-P1. This piping system is certified to comply with ASME Section III, Code Class 2, 1971 Edition with Winter 1973 Addenda requirements.
5) The replacement valve RHR-RV-25A, Serial No N99785-00-0001 is certified to comply with ASME Section III, Code Class 2, 1995 Edition with 1996 Addenda requirements.

PLAN No 2-1950

ENERGY NORTHWEST
People·Vision·Solutions

FORM NIS-2 OWNER'S REPORT FOR REPAIRS OR REPLACEMENTS (Back)

8 Tests Conducted: Hydrostatic ☐ Pneumatic ☐ Nominal Operating Pressure ☐ Other ☒

Test Pressure: 38.6 Psig — Test Temperature: 80.2° F

Component Design Pressure: 125 Psig — Temperature: 480° F

9. Remarks (Applicable Manufacturer's Data Reports to be attached): 1) See attached NV-1 Code Data Report for the replacement relief valve RHR-RV-25A, Serial No N99785-00-0001.2) * VT-2 visual examination to confirm pressure boundary integrity of the replacement relief valve RHR-RV-25A, Serial No N99785-00-0001 outlet bolted flanged joint was performed during 10CFR50, Appendix J Local Leak Rate Test (LLRT). 3) Test pressure of 38.6 Psig and test temperature of 80.2° F is for relief valve outlet joint. Component design pressure of 125 Psig and design temperature of 480° F is for the relief valve outlet piping.

CERTIFICATE OF COMPLIANCE

We certify that the statements made in this Owner's Report are correct and this replacement *conforms to the rules of the ASME Code, Section XI.*

Type Code Symbol Stamp: Not Applicable

Certificate Of Authorization No.: Not Applicable

Expiration Date: Not Applicable

Prepared By Kuldip Singh — Kuldip Singh - Program Lead Engineer (PLE)

Signed By Kuldip Singh — Kuldip Singh - Program Lead Engineer (PLE)

Date 7/14/05 *Date* 7/14/05

CERTIFICATE OF INSERVICE INSPECTION

I, the undersigned, holding a valid commission issued by the National Board of Boiler and Pressure Vessel Inspectors and the State of Washington *and employed by* Hartford Steam Boiler Of Connecticut of Hartford, Connecticut *have inspected the components described in this Owner's Report during the period* 3-28-2005 *to* 7-18-2005 *and state to the best of my knowledge and belief, the Owner has performed examinations and taken corrective measures described in this Owner's Report in accordance with the requirements of the ASME Code, Section XI.*

By signing this certificate neither the Inspector nor his employer makes any warranty, expressed or implied, concerning the examinations and corrective measures described in this Owner's Report. Furthermore, neither the Inspector nor his employer shall be liable in any manner for any personal injury or property damage or a loss of any kind arising from or connected with this inspection.

Inspector's Signature — *Commissions* 10655W A, B, N, E — National Board, State, and Endorsements

Date 7-18-2005

PLAN No. 2-1950

Q.C.-44E
Sheet 1 of 2

7/13/05

* Corrected report to add non-pressure retaining parts listed under remarks. DET 11-JAN-05

JC 1-11-05

FORM NV-1, CERTIFICATE HOLDERS' DATA REPORT FOR PRESSURE OR VACUUM RELIEF VALVES

As required by the Provisions of the ASME Code, Section III, Division 1

1. Manufactured and certified by Anderson Greenwood Crosby, 43 Kendrick St., Wrentham, MA 02093
(Name and Address of NV Certificate Holder)
Crosby Factory Order No. U835820000 Customer Order No. 00317009

2. Manufactured for ENERGY NORTHWEST
(Name and Address of Purchaser)

3. Location of Installation COLUMBIA GEN. STATION
(Name and Address)

4. Valve 9511882A (Model No./Series No.) Orifice size 0.328 (in.) Nom. Inlet size 1 (in.) Outlet size 2 (in.)

5. ASME Code, Section III, Division 1: 1995 (Edition) 1996 (Addenda Date) 2 (Class) -- (Code Case No.)

6. Type SAFETY RELIEF SPRING (Spring, Pilot or Power Operated) Valve I.D./Tag No. RHR-RV-25A

487 (Set Pressure, psig) 20% OF S.P. (Blowdown, psi) 148 (Rated Relieving Temperature) 1100 (Hydro Test psig, Inlet) at 70 °F

7. Ident. N99785-00-0001 (Cert. Holder's serial no.) N/A (CRN) DS-C-99785REV. A (Drawing No.) --- (Nat'l Bd. No.) 2004 (Yr. Built)

8. Control Ring Settings N/A

9. Pressure Retaining Items:

	Serial No. or Identification	Material Spec. Including Type or Grade	Tensile Strength (psi)
Body			
Bonnet			
Support Rods	---	---	---
Nozzle			
Disc Insert	N99595-NGDL	ASME SA479 TYPE 316	75,000
	N95899-NGCM		
Spring Washer	N95899-NGCT	ASME SA193 GR. B6	110,000
Adjusting Bolt	N95900-02-0917	ASME SA193 GR. B6	110,000
Spindle	N95898-15-0930	ASME SA193 GR. B6	110,000
Spring	NX5385-0010	ASTM A313 TYPE 316	n/a
Bolting	---	---	---
Other Items			
BASE	N99563-32-0003	ASME SA479 TYPE 316	75,000
LAP JOINT STUB END	N99564-32-0003	ASME SA182 GR. F316	70,000
LAP JOINT FLANGE	N96820-55-0078	ASME SA182 GR. F316	70,000
CYLINDER	N99593-31-0005	ASME SA105	70,000
WELD NECK FLANGE	N99592-31-0003	ASME SA105	70,000

1.1

Form NV-1 (Back) Certificate Holder's Serial No. N99785-00-0001

10. Relieving capacity 49 Gpm Water @ 70 DEG.F @ 10 overpressure as certified by the National Board 09/12/00
(steam or fluid, lb/hr) (date)

* 11. Remarks: Pipe Cap, AGC p/n:156223, CAJON p/n:SS-2-CP - Material ASME SA182 Gr.F316
Male Connector, AGC p/n: 156216, CAJON p/n: SS-2-TSW-1-2 Material ASME SA182 Gr.F3

The above material was procured in accordance with the 'small products' provisions of ASME Section III, Subarticle NC/ND-2600. DET 11-JAN-05

CERTIFICATE OF DESIGN

Design Specification certified by Jack R. Cole Jr. PE State WA Reg. No. 0020653

Design Report certified by Charles R. Dowd PE State MA Reg. No. 39103

CERTIFICATE OF COMPLIANCE

We certify that the statements made in this report are correct and that this valve conforms to the rules for construction of the ASME Code, Section III, Division 1. * date: 11-JAN-05 SIGNED: D.E. Tuttle

NV Certificate of Authorization No. N-1878 Expires 31-Dec-04

Date 22-OCT-04 Name Anderson Greenwood Crosby Wrentham, MA (NV Certificate Holder) Signed D.E. Tuttle (Authorized Representative)

CERTIFICATE OF INSPECTION

I, the undersigned, holding a valid commission issued by the National Board of Boiler and Pressure Vessel Inspectors and the State ~~or Province~~ of MA and employed by HSB-CT of Hartford, CT have inspected the valve described in this Data Report on 10-8, 2004 and state that to the best of my knowledge and belief, the N Certificate Holder has constructed this valve in accordance with the ASME Code, Section III, Division 1.

By signing this certificate, neither the Inspector nor his employer makes any warrant, expressed or implied, concerning the component described in this Data Report. Furthermore, neither the Inspector nor his employer shall be liable in any manner for any personal injury or property damage or a loss of any kind arising from or connected with this inspection.

Date OCT 25, '04 Signed [signature] (Authorized Inspector) Commissions MA-1420 A, N, I (Nat'l. Bd. (incl. Endorsements) and state or prov. and no.)

* date: 1-11-05 SIGNED: [signature] MA 1420 A, N, I

1.2

PLAN No 2-1951

ENERGY NORTHWEST
People·Vision·Solutions

FORM NIS-2 OWNER'S REPORT FOR REPAIRS OR REPLACEMENTS
As Required By The Provisions Of The ASME Code Section XI

1. Owner: Energy Northwest
Address: Columbia Generating Station, North Power Plant Loop, Richland, Washington, 99352
2. Plant: Columbia Generating Station
Address: Columbia Generating Station, North Power Plant Loop, Richland, Washington, 99352

Date: 06/24/05
Sheet: 1 Of 1
Unit: Not Applicable

3. (a) Work Performed By: Energy Northwest
(b) Repair Organization P.O. No, Job No, etc.: Energy Northwest
(c) Type Code Symbol Stamp: Not Applicable
(d) Certificate Of Authorization No.: Not Applicable
(e) Expiration Date: Not Applicable
4. Identification Of System: Residual Heat Removal (RHR) System
5. (a) Applicable Construction Code: ASME Section III, Code Class 2, 1971 Edition with Winter 1973 Addenda, Code Case: None
(b) Applicable Edition Of ASME Section XI Utilized For Repairs Or Replacements: 1989 Edition with no Addenda, Code Case: None
6. Identification Of Components Repaired Or Replaced And Replacement Components

Name Of Component	Name Of Manufacturer	Manufacturer's Serial No	National Board No	Other I.D.	Year Built	Repaired, Replaced Or Replacement	ASME Code Stamped (Yes Or No) Code Class
RHR(3)-2A	WPPSS*	RHR(3)-2A-P1	N/A	N/A	1983	----------	Yes, Code Class 2
RHR(4)-1A	WPPSS*	RHR(4)-1A-P1	N/A	N/A	1983	----------	Yes, Code Class 2
RHR-RV-88A	Lonergan	509258-105-1	N/A	N/A	1981	Replaced	Yes, Code Class 2
RHR-RV-88A	Crosby**	N99786-00-0001	N/A	N/A	2004	Replacement	Yes, Code Class 2

7. Description Of Work Performed: Replaced existing relief valve RHR-V-88A. The replacement work was performed as follows:
1) Removed existing relief valve RHR-RV-88A, Serial No. 509258-105-1.
2) Installed replacement relief valve RHR-RV-88A, Serial No N99786-00-0001.

NOTES -
1) * Company name changed from Washington Public Power Supply System (WPPSS) to Energy Northwest in 1999.
2) ** Anderson Greenwood Crosby
3) The existing ASME Code Stamped piping system applicable to the replacement valve RHR-RV-88A, Serial No N99786-00-0001 inlet side is Residual Heat Removal (RHR) piping system RHR(3)-2A-P1. This piping system is certified to comply with ASME Section III, Code Class 2, 1971 Edition with Winter 1973 Addenda requirements.
4) The existing ASME Code Stamped piping system applicable to the replacement valve RHR-RV-88A, Serial No N99786-00-0001 outlet side is Residual Heat Removal (RHR) piping system RHR(4)-1A-P1. This piping system is certified to comply with ASME Section III, Code Class 2, 1971 Edition with Winter 1973 Addenda requirements.
5) The replacement valve RHR-RV-88A, Serial No N99786-00-0001 is certified to comply with ASME Section III, Code Class 2, 1995 Edition with 1996 Addenda requirements.

PLAN No 2-1951

ENERGY NORTHWEST
People·Vision·Solutions

FORM NIS-2 OWNER'S REPORT FOR REPAIRS OR REPLACEMENTS (Back)

8 Tests Conducted: Hydrostatic [ ] *Pneumatic* [ ] *Nominal Operating Pressure* [ ] *None* [X]

Test Pressure: Psig *Test Temperature:* °F

Component Design Pressure: Psig *Temperature:* °F

9. Remarks (Applicable Manufacturer's Data Reports to be attached): See attached NV-1 Code Data Report for the replacement relief valve RHR-RV-88A, Serial No N99786-00-0001.

CERTIFICATE OF COMPLIANCE

We certify that the statements made in this Owner's Report are correct and this replacement *conforms to the rules of the ASME Code, Section XI.*

Type Code Symbol Stamp: Not Applicable

Certificate Of Authorization No.: Not Applicable

Expiration Date: Not Applicable

Prepared By Kuldip Singh - Program Lead Engineer (PLE) *Signed By* Kuldip Singh - Program Lead Engineer (PLE)

Date 6/24/05 *Date* 6/24/05

CERTIFICATE OF INSERVICE INSPECTION

I, the undersigned, holding a valid commission issued by the National Board of Boiler and Pressure Vessel Inspectors and the State of Washington *and employed by* Hartford Steam Boiler Of Connecticut of Hartford, Connecticut *have inspected the components described in this Owner's Report during the period* 3/18/2005 *to* 6/28/2005 *and state to the best of my knowledge and belief, the Owner has performed examinations and taken corrective measures described in this Owner's Report in accordance with the requirements of the ASME Code, Section XI.*

By signing this certificate neither the Inspector nor his employer makes any warranty, expressed or implied, concerning the examinations and corrective measures described in this Owner's Report. Furthermore, neither the Inspector nor his employer shall be liable in any manner for any personal injury or property damage or a loss of any kind arising from or connected with this inspection.

Inspector's Signature *Commissions* 10655W A, B, N, I
National Board, State, and Endorsements

Date 6/28/2005

PLAN NO. 2-1951
[illegible] 6-15-05

Q.C.-44E
Sheet 1 of 2

FORM NV-1, CERTIFICATE HOLDERS' DATA REPORT FOR PRESSURE OR VACUUM RELIEF VALVES

As required by the Provisions of the ASME Code, Section III, Division 1

1. Manufactured and certified by Anderson Greenwood Crosby, 43 Kendrick St., Wrentham, MA 02093
(Name and Address of NV Certificate Holder)

Crosby Factory Order No. U835820000 Customer Order No. 00317009

2. Manufactured for ENERGY NORTHWEST
(Name and Address of Purchaser)

3. Location of Installation COLUMBIA GENERATION STA
(Name and Address)

4. Valve 9511812A (Model No./Series No.) Orifice size 0.328 (in.) Nom. Inlet size 3/4 (in.) Outlet size 1 (in.)

5. ASME Code, Section III, Division 1: 1995 (Edition) 1996 (Addenda Date) 2 (Class) -- (Code Case No.)

6. Type SAFETY RELIEF SPRING (Spring, Pilot or Power Operated) Valve I.D./Tag No. RHR-RV-88A

205 (Set Pressure, psig) 15% OF S.P. (Blowdown, psi) 148 (Rated Relieving Temperature) 1100 (Hydro Test psig, Inlet) at 70 °F

7. Ident. N99786-00-0001 (Cert. Holder's serial no.) N/A (CRN) DS-C-99786REV. B (Drawing No.) --- (Nat'l Bd. No.) 2004 (Yr. Built)

8. Control Ring Settings N/A

9. Pressure Retaining Items:

	Serial No. or Identification	Material Spec. Including Type or Grade	Tensile Strength (psi)
Body			
Bonnet			
Support Rods	---	---	---
Nozzle			
Disc Insert	N99603-NGFN	ASME SA479 TYPE 316	75,000
	N95899-NGEF		
Spring Washer	N95899-NGHA	ASME SA193 GR. B6	110,000
Adjusting Bolt	N95900-03-0942	ASME SA193 GR. B6	110,000
Spindle	N95898-16-0945	ASME SA193 GR. B6	110,000
Spring	NX5846-0030	ASTM A313 TYPE 316	n/a
Bolting	---	---	---
Other Items			
Base	N99602-31-0004	ASME SA479 TYPE 316	75,000
Cylinder	N99601-32-0008	ASME SA216 GR. WCB	70,000
Weld Neck Flange	N99597-31-0007	ASME SA105	70,000

Q.C.-44E

Form NV-1 (Back) Certificate Holder's Serial No. N99786-00-0001 Sheet 2

10. Relieving capacity 31 GPM Water @ 70 DEG.F @ 10 overpressure as certified by the National Board 9/12/00
(steam or fluid, lb/hr) (date)

11. Remarks:

CERTIFICATE OF DESIGN

Design Specification certified by Jack R. Cole Jr. PE State WA Reg. No. 0020653

Design Report certified by Charles R. Dowd PE State MA Reg. No. 39103

CERTIFICATE OF COMPLIANCE

We certify that the statements made in this report are correct and that this valve conforms to the rules for construction of the ASME Code, Section III, Division 1.

NV Certificate of Authorization No. N-1878 Expires 31-Dec-04

Date 3-DEC-04 Name Anderson Greenwood Crosby Wrentham, MA (NV Certificate Holder) Signed D.E. Tu (Authorized Representative)

CERTIFICATE OF INSPECTION

I, the undersigned, holding a valid commission issued by the National Board of Boiler and Pressure Vessel Inspectors and the State ~~or Province~~ of MA and employed by HSB - CT of Hartford, CT have inspected the valve described in this Data Report on 11-30, 2004 and state that to the best of my knowledge and belief, the N Certificate Holder has constructed this valve in accordance with the ASME Code, Section III, Division 1.

By signing this certificate, neither the Inspector nor his employer makes any warrant, expressed or implied, concerning the component described in this Data Report. Furthermore, neither the Inspector nor his employer shall be liable in any manner for any personal injury or property damage or a loss of any kind arising from or connected with this inspection.

Date DEC 3, 04 Signed (Authorized Inspector) Commissions MA-1420 A, N, I (Nat'l. Bd. (incl. Endorsements) and state or prov. and no.)

PLAN No 2-1952

ENERGY NORTHWEST
People·Vision·Solutions

FORM NIS-2 OWNER'S REPORT FOR REPAIRS OR REPLACEMENTS
As Required By The Provisions Of The ASME Code Section XI

1. Owner: Energy Northwest
Address: Columbia Generating Station, North Power Plant Loop, Richland, Washington, 99352
2. Plant: Columbia Generating Station
Address: Columbia Generating Station, North Power Plant Loop, Richland, Washington, 99352

Date: 06/11/05
Sheet: 1 Of 1
Unit: Not Applicable

3. (a) Work Performed By: Energy Northwest
(b) Repair Organization P.O. No, Job No, etc.: Energy Northwest
(c) Type Code Symbol Stamp: Not Applicable
(d) Certificate Of Authorization No.: Not Applicable
(e) Expiration Date: Not Applicable
4. Identification Of System: Low Pressure Core Spray (LPCS) System
5. (a) Applicable Construction Code: ASME Section III, Code Class 2, 1971 Edition with Winter 1973 Addenda, Code Case: None
(b) Applicable Edition Of ASME Section XI Utilized For Repairs Or Replacements: 1989 Edition with no Addenda, Code Case: None
6. Identification Of Components Repaired Or Replaced And Replacement Components

Name Of Component	Name Of Manufacturer	Manufacturer's Serial No	National Board No	Other I.D.	Year Built	Repaired, Replaced Or Replacement	ASME Code Stamped (Yes Or No) Code Class
LPCS(3)-1	WPPSS*	LPCS(3)-1	N/A	N/A	1983	----------	Yes, Code Class 2
LPCS(1)-2	WPPSS*	LPCS(1)-2-P1	N/A	N/A	1984	----------	Yes, Code Class 2
LPCS-RV-18	Lonergan	138433-1-1	N/A	N/A	1994	Replaced	Yes, Code Class 2
LPCS-RV-18	Crosby**	N99781-00-0001	N/A	N/A	2005	Replacement	Yes, Code Class 2

7. Description Of Work Performed: Replaced existing relief valve LPCS-RV-18. The replacement work was performed as follows:
1) Removed existing relief valve LPCS-RV-18, Serial No 138433-1-1.
2) Performed VT-3 visual examination on the existing studs for the relief valve inlet joint. VT-3 visual examination results acceptable.
3) Performed VT-3 visual examination on the existing nuts for the relief valve inlet joint. VT-3 visual examination results acceptable.
4) Performed VT-3 visual examination on the existing studs for the relief valve outlet joint. VT-3 visual examination results acceptable.
5) Performed VT-3 visual examination on the existing nuts for the relief valve outlet joint. VT-3 visual examination results acceptable.
6) Installed replacement relief valve LPCS-RV-18, Serial No N99781-00-0001.
7) Reinstalled VT-3 visually examined existing studs and nuts for the relief valve inlet joint.
8) Reinstalled VT-3 visually examined existing studs and nuts for the relief valve outlet joint.
9) Performed VT-2 visual examination during pressure test to confirm pressure boundary integrity of the relief valve inlet bolted flanged joint. No evidence of leakage during the pressure test.
10) Performed VT-2 visual examination during pressure test to confirm pressure boundary integrity of the relief valve outlet bolted flanged joint. No evidence of leakage during the pressure test.

NOTES -
1) * Company name changed from Washington Public Power Supply System (WPPSS) to Energy Northwest (EN) in 1999.
2) ** Anderson Greenwood Crosby
3) The existing ASME Code Stamped piping system applicable to the replacement relief valve LPCS-RV-18, Serial No N99781-00-0001 inlet side is Low Pressure Core Spray (LPCS) piping system LPCS(1)-2-P1. This piping system is certified to comply with ASME Section III, Code Class 2, 1971 Edition with Winter 1973 Addenda requirements.
4) The existing ASME Code Stamped piping system applicable to the replacement relief valve LPCS-RV-18, Serial No N99781-00-0001 outlet side is Low Pressure Core Spray (LPCS) piping system LPCS(3)-2. This piping system is certified to comply with ASME Section III, Code Class 2, 1971 Edition with Winter 1973 Addenda requirements.
5) The replacement relief valve LPCS-RV-18, Serial No N99781-00-0001 is certified to comply with ASME Section III, Code Class 2, 1995 Edition with 1996 Addenda requirements.

PLAN No 2-1952

ENERGY NORTHWEST
People·Vision·Solutions

FORM NIS-2 OWNER'S REPORT FOR REPAIRS OR REPLACEMENTS (Back)

8 Tests Conducted: Hydrostatic [ ] **Pneumatic** [ ] **Nominal Operating Pressure** [X] **Other** [ ]
Test Pressure: 310/38.79Psig **Test Temperature:** 76/82.8° F
Component Design Pressure: 550/100 Psig **Temperature:** 212° F

9. Remarks (Applicable Manufacturer's Data Reports to be attached): 1) See attached NV-1 Code Data Report for the replacement relief valve LPCS-RV-18, Serial No N99781-00-0001.
2) VT-2 visual examination to confirm pressure boundary integrity of the replacement relief valve LPCS-RV-18, Serial No N99781-00-0001 inlet bolted flanged joint was performed during system nominal operating pressure.
3) * VT-2 visual examination to confirm pressure boundary integrity of the replacement relief valve LPCS-RV-18, Serial No N99781-00-0001 outlet bolted flanged joint was performed during 10CFR50, Appendix J Local Leak Rate Test (LLRT).
4) Test pressure of 310 Psig and test temperature of 76° F is for relief valve inlet joint. Component design pressure of 550 Psig and design temperature of 212° F is for the relief valve inlet piping.
5) Test pressure of 38.79 Psig and test temperature of 82.8° F is for relief valve outlet joint. Component design pressure of 100 Psig and design temperature of 212° F is for the relief valve outlet piping.

CERTIFICATE OF COMPLIANCE

We certify that the statements made in this Owner's Report are correct and this replacement *conforms to the rules of the ASME Code, Section XI.*
Type Code Symbol Stamp: Not Applicable
Certificate Of Authorization No.: Not Applicable
Expiration Date: Not Applicable

Prepared By Kuldip Singh - Program Lead Engineer (PLE) **Signed By** Kuldip Singh - Program Lead Engineer (PLE)
Date 6/13/05 **Date** 6/13/05

CERTIFICATE OF INSERVICE INSPECTION

I, the undersigned, holding a valid commission issued by the National Board of Boiler and Pressure Vessel Inspectors and the State of Washington *and employed by* Hartford Steam Boiler Of Connecticut of Hartford, Connecticut *have inspected the components described in this Owner's Report during the period* 6/26/2005 *to* 6/16/2005 *and state to the best of my knowledge and belief, the Owner has performed examinations and taken corrective measures described in this Owner's Report in accordance with the requirements of the ASME Code, Section XI.*
By signing this certificate neither the Inspector nor his employer makes any warranty, expressed or implied, concerning the examinations and corrective measures described in this Owner's Report. Furthermore, neither the Inspector nor his employer shall be liable in any manner for any personal injury or property damage or a loss of any kind arising from or connected with this inspection.

Inspector's Signature **Commissions** 10655W A, B, N, I
National Board, State, and Endorsements

Date 6/16/2005

PLAN No. 2-1952
Philip Sims
6/5/05

Q.C.-44E
Sheet 1 of 2

FORM NV-1, CERTIFICATE HOLDERS' DATA REPORT FOR PRESSURE OR VACUUM RELIEF VALVES

As required by the Provisions of the ASME Code, Section III, Division 1

1. Manufactured and certified by Anderson Greenwood Crosby, 43 Kendrick St., Wrentham, MA 02093
(Name and Address of NV Certificate Holder)
Crosby Factory Order No. U835310000 Customer Order No. 00317001

2. Manufactured for ENERGY NORTHWEST
(Name and Address of Purchaser)

3. Location of Installation COLUMBIA GENERATING STATION
(Name and Address)

4. Valve JLT-JOS-35-SPL TYPE A (Model No./Series No.) Orifice size 0.398 (in.) Nom. Inlet size 1-1/2 (in.) Outlet size 2 (in.)

5. ASME Code, Section III, Division 1: 1995 (Edition) 1996 (Addenda Date) 2 (Class) -- (Code Case No.)

6. Type SAFETY RELIEF (SPRING) (Spring, Pilot or Power Operated) Valve I.D./Tag No. LPCS-RV-18

442 (Set Pressure, psig) 15% OF S.P. (Blowdown, psi) 148 (Rated Relieving Temperature) 1125 (Hydro Test psig, Inlet) at 70 °F

7. Ident. N99781-00-0001 (Cert. Holder's serial no.) N/A (CRN) DS-C-99781REV. C (Drawing No.) --- (Nat'l Bd. No.) 2005 (Yr. Built)

8. Control Ring Settings N/A

9. Pressure Retaining Items:

	Serial No. or Identification	Material Spec. Including Type or Grade	Tensile Strength (psi)
Body	N99567-31-0001	ASME SA216 GR. WCB	70,000
Bonnet	N99600-31-0001	ASME SA216 GR. WCB	70000
Support Rods	---	---	---
Nozzle	N99570-31-0001	ASME SA479 TYPE 316	75,000
Disc Insert	N99746-NGGC	ASME SA479 TYPE 316	75000
	N99164-33-0006		
Spring Washer	N99164-33-0005	ASME SA193 GR. B6	110,000
Adjusting Bolt	N97302-36-0017	ASME SA193 GR. B6	110,000
Spindle	N97653-33-0007	ASME SA193 GR. B6	110,000
Spring	NX5968-0005	ASTM A313-316	n/a
Bolting	---	---	---
Other Items			
Bonnet Stud	N96120	ASME SA193 GR. B7	100,000
Bonnet Stud Nut	N96677	ASME SA194 GR. 2H	n/a

Form NV-1 (Back) Certificate Holder's Serial No. N99781-00-0001

10. Relieving capacity 68 GPM WATER @ 70 DEG.F @ 10 overpressure as certified by the National Board 02/1980
(steam or fluid, lb/hr) (date)

11. Remarks: Pipe Cap, AGC p/n: 156223, CAJON p/n: SS-2-CP - Material ASME SA182 GR. F316
Male connector, AGC p/n: 156216, CAJON p/n: SS-2-TSW-1-2 - Material ASME SA182 GR. F316
The above material was procured in accordance with the 'small products' provisions of ASME Section III, Sub-article NC/ND-2600.

CERTIFICATE OF DESIGN

Design Specification certified by JACK R. COLE JR. PE State WA Reg. No. 0020653

Design Report certified by CHARLES R. DOWD PE State MA Reg. No. 39103

CERTIFICATE OF COMPLIANCE

We certify that the statements made in this report are correct and that this valve conforms to the rules for construction of the ASME Code, Section III, Division 1.

NV Certificate of Authorization No. N-1878 Expires 30-Sep-07

Date 29-MAR-05 Name Anderson Greenwood Crosby Wrentham, MA (NV Certificate Holder) Signed D. E. Tuttle (Authorized Representative)

CERTIFICATE OF INSPECTION

I, the undersigned, holding a valid commission issued by the National Board of Boiler and Pressure Vessel Inspectors and the State ~~or Province~~ of MA and employed by HSB - CT of Hartford, CT have inspected the valve described in this Data Report on 3-29, 2005 and state that to the best of my knowledge and belief, the N Certificate Holder has constructed this valve in accordance with the ASME Code, Section III, Division 1.

By signing this certificate, neither the Inspector nor his employer makes any warrant, expressed or implied, concerning the component described in this Data Report. Furthermore, neither the Inspector nor his employer shall be liable in any manner for any personal injury or property damage or a loss of any kind arising from or connected with this inspection.

Date MAR 30 '05 Signed [signature] (Authorized Inspector) Commissions MA-1420 A, N, I (Nat'l. Bd. (incl. Endorsements) and state or prov. and no.)

1.2

PLAN No 2-1953

ENERGY NORTHWEST
People·Vision·Solutions

FORM NIS-2 OWNER'S REPORT FOR REPAIRS OR REPLACEMENTS
As Required By The Provisions Of The ASME Code Section XI

Date: 06/24/05
Sheet: 1 Of 1
Unit: Not Applicable

1. **Owner:** Energy Northwest
   Address: Columbia Generating Station, North Power Plant Loop, Richland, Washington, 99352
2. **Plant:** Columbia Generating Station
   Address: Columbia Generating Station, North Power Plant Loop, Richland, Washington, 99352
3. **(a) Work Performed By:** Energy Northwest
   (b) Repair Organization P.O. No, Job No, etc.: Energy Northwest
   (c) Type Code Symbol Stamp: Not Applicable
   (d) Certificate Of Authorization No.: Not Applicable
   (e) Expiration Date: Not Applicable
4. **Identification Of System:** High Pressure Core Spray (HPCS) System
5. **(a) Applicable Construction Code:** ASME Section III, Code Class 2, 1971 Edition with Winter 1973 Addenda, Code Case: None
   (b) Applicable Edition Of ASME Section XI Utilized For Repairs Or Replacements: 1989 Edition with no Addenda, Code Case: None
6. **Identification Of Components Repaired Or Replaced And Replacement Components**

Name Of Component	Name Of Manufacturer	Manufacturer's Serial No	National Board No	Other I.D.	Year Built	Repaired, Replaced Or Replacement	ASME Code Stamped (Yes Or No) Code Class
HPCS(3)-1	WPPSS*	HPCS(3)-1	N/A	N/A	1983	----------	Yes, Code Class 2
HPCS(1)-4CL2	WPPSS*	HPCS(1)-4CL2-P2	N/A	N/A	1983	----------	Yes, Code Class 2
HPCS-RV-35	A/G	97-16626	N/A	N/A	1998	Replaced	Yes, Code Class 2
HPCS-RV-35	Crosby**	N99780-00-0001	N/A	N/A	2005	Replacement	Yes, Code Class 2

7. **Description Of Work Performed:** Replaced existing relief valve HPCS-RV-35. The replacement work was performed as follows:
   1) Removed existing relief valve HPCS-RV-35, Serial No 97-16626.
   2) Performed VT-3 visual examination on the existing studs for the relief valve inlet joint. VT-3 visual examination results acceptable.
   3) Performed VT-3 visual examination on the existing nuts for the relief valve inlet joint. VT-3 visual examination results acceptable.
   4) Performed VT-3 visual examination on the existing studs for the relief valve outlet joint. VT-3 visual examination results acceptable.
   5) Performed VT-3 visual examination on the existing nuts for the relief valve outlet joint. VT-3 visual examination results acceptable.
   6) Installed replacement relief valve HPCS-RV-35, Serial No N99780-00-0001.
   7) Reinstalled VT-3 visually examined existing studs and nuts for the relief valve inlet joint.
   8) Reinstalled VT-3 visually examined existing studs and nuts for the relief valve outlet joint.
   9) Performed VT-2 visual examination during pressure test to confirm pressure boundary integrity of the relief valve inlet bolted flanged joint. No evidence of leakage during the pressure test.
   10) Performed VT-2 visual examination during pressure test to confirm pressure boundary integrity of the relief valve outlet bolted flanged joint. No evidence of leakage during the pressure test.

NOTES

1) * Company name changed from Washington Public Power Supply System (WPPSS) to Energy Northwest (EN) in 1999.
2) ** Anderson Greenwood Crosby
3) The existing ASME Code Stamped piping system applicable to the replacement relief valve HPCS-RV-35, Serial No N99780-00-0001 inlet side is High Pressure Core Spray (HPCS) piping system HPCS(1)-4CL2-P2. This piping system is certified to comply with ASME Section III, Code Class 2, 1971 Edition with Winter 1973 Addenda requirements.
4) The existing ASME Code Stamped piping system applicable to the replacement relief valve HPCS-RV-35, Serial No N99780-00-0001 outlet side is High Pressure Core Spray (HPCS) piping system HPCS(3)-1. This piping system is certified to comply with ASME Section III, Code Class 2, 1971 Edition with Winter 1973 Addenda requirements.
5) The replacement relief valve HPCS-RV-35, Serial No N99780-00-0001 is certified to comply with ASME Section III, Code Class 2, 1995 Edition with 1996 Addenda requirements.

PLAN No 2-1953

ENERGY NORTHWEST
People·Vision·Solutions

FORM NIS-2 OWNER'S REPORT FOR REPAIRS OR REPLACEMENTS (Back)

8 Tests Conducted: Hydrostatic [ ] *Pneumatic* [ ] *Nominal Operating Pressure* [X] *Other* [ ]

Test Pressure: 420/38.85 Psig *Test Temperature:* 74/76° F

Component Design Pressure: 1575/100 Psig *Temperature:* 212° F

9. Remarks (Applicable Manufacturer's Data Reports to be attached): 1) See attached NV-1 Code Data Report for the replacement relief valve HPCS-RV-35, Serial No N99780-00-0001.
2) VT-2 visual examination to confirm pressure boundary integrity of the replacement relief valve HPCS-RV-35, Serial No N99780-00-0001 inlet bolted flanged joint was performed during system nominal operating pressure.
3) * VT-2 visual examination to confirm pressure boundary integrity of the replacement relief valve HPCS-RV-35, Serial No N99780-00-0001 outlet bolted flanged joint was performed during 10CFR50, Appendix J Local Leak Rate Test (LLRT).
4) Test pressure of 420 Psig and test temperature of 74° F is for relief valve inlet joint. Component design pressure of 1575 Psig and design temperature of 212° F is for the relief valve inlet piping.
5) Test pressure of 38.85 Psig and test temperature of 76° F is for relief valve outlet joint. Component design pressure of 100 Psig and design temperature of 212° F is for the relief valve outlet piping.

CERTIFICATE OF COMPLIANCE

We certify that the statements made in this Owner's Report are correct and this replacement *conforms to the rules of the ASME Code, Section XI.*
Type Code Symbol Stamp: Not Applicable
Certificate Of Authorization No.: Not Applicable
Expiration Date: Not Applicable

Prepared By Kuldip Singh *Signed By* Kuldip Singh
Kuldip Singh - Program Lead Engineer (PLE) Kuldip Singh - Program Lead Engineer (PLE)
Date 6/24/05 *Date* 6/24/05

CERTIFICATE OF INSERVICE INSPECTION

I, the undersigned, holding a valid commission issued by the National Board of Boiler and Pressure Vessel Inspectors and the State of Washington *and employed by* Hartford Steam Boiler Of Connecticut of Hartford, Connecticut *have inspected the components described in this Owner's Report during the period* 5/9/2005 *to* 6/28/2005 *and state to the best of my knowledge and belief, the Owner has performed examinations and taken corrective measures described in this Owner's Report in accordance with the requirements of the ASME Code, Section XI.*
By signing this certificate neither the Inspector nor his employer makes any warranty, expressed or implied, concerning the examinations and corrective measures described in this Owner's Report. Furthermore, neither the Inspector nor his employer shall be liable in any manner for any personal injury or property damage or a loss of any kind arising from or connected with this inspection.

Inspector's Signature *Commissions* 10655W A, B, N, I
National Board, State, and Endorsements

Date 6/28/2005

PLAN NO. 2-1953

Philip Smith 6/7/05

Q.C.-44E

FORM NV-1, CERTIFICATE HOLDERS' DATA REPORT FOR PRESSURE OR VACUUM RELIEF VALVES

As required by the Provisions of the ASME Code, Section III, Division 1

1. Manufactured and certified by Anderson Greenwood Crosby, 43 Kendrick St., Wrentham, MA 02093
(Name and Address of NV Certificate Holder)

Crosby Factory Order No. U835310000 Customer Order No. 00317001

2. Manufactured for ENERGY NORTHWEST
(Name and Address of Purchaser)

3. Location of Installation COLUMBIA
(Name and Address)

4. Valve JLT-JOS -55 TYPE A (Model No./Series No.) Orifice size 0.398 (in.) Nom. Inlet size 1-1/2 (in.) Outlet size 2 (in.)

5. ASME Code, Section III, Division 1: 1995 (Edition) 1996 (Addenda Date) 2 (Class) -- (Code Case No.)

6. Type SAFETY RELIEF (SPRING) (Spring, Pilot or Power Operated) Valve I.D./Tag No. HPCS-RV-35

1572 (Set Pressure, psig) 10% (Blowdown, psi) 148 (Rated Relieving Temperature) 3350 (Hydro Test psig, Inlet) at 70 °F

7. Ident. N99780-00-0001 (Cert. Holder's serial no.) N/A (CRN) DS-C-99780 REV. C (Drawing No.) — (Nat'l Bd. No.) 2005 (Yr. Built)

8. Control Ring Settings N/A

9. Pressure Retaining Items:

	Serial No. or Identification	Material Spec. Including Type or Grade	Tensile Strength (psi)
Body	N99585-31-0001	ASME SA216 GR. WCB	70,000
Bonnet	N99589-31-0001	ASME SA216 GR. WCB	70000
Support Rods	---	---	---
Nozzle	N99588-31-0001	ASME SA479 TYPE 316	75,000
Disc Insert	N99746-NGGF	ASME SA479 TYPE 316	75000
	N99016-33-0011		
Spring Washer	N99016-33-0012	ASME SA193 GR. B6	110,000
Adjusting Bolt	N97302-36-0018	ASME SA193 GR. B6	110000
Spindle	N99599-31-0001	ASME SA193 GR. B6	110,000
Spring	NX5995-0001	ASTM A313 TYPE 316	N/A
Bolting	---	---	---
Other Items			
Bonnet Stud	N96120	ASME SA193 GR. B7	100,000
Bonnet Stud Nut	N95566	ASME SA194 GR. 2H	N/A

Form NV-1 (Back) Certificate Holder's Serial No. N99780-00-0001

10. Relieving capacity 128 GPM Water @ 70 DEG.F @ 10 overpressure as certified by the National Board 02/01/80
(steam or fluid, lb/hr) (date)

11. Remarks: Pipe Cap, AGC p/n: 156223, CAJON p/n: SS-2-CP - Material ASME SA182 GR. F316
Male connector, AGC p/n: 156216, CAJON p/n: SS-2-TSW-1-2 - Material ASME SA182 GR. F316
The above material was procured in accordance with the 'small products' provisions of ASME Section III, Sub-article NC/ND-2600.

CERTIFICATE OF DESIGN

Design Specification certified by Jack R. Cole Jr. PE State WA Reg. No. 0020653

Design Report certified by Charles R. Dowd PE State MA Reg. No. 39103

CERTIFICATE OF COMPLIANCE

We certify that the statements made in this report are correct and that this valve conforms to the rules for construction of the ASME Code, Section III, Division 1.

NV Certificate of Authorization No. N-1878 Expires 30-Sep-07

Date 28-APR-05 Name Anderson Greenwood Crosby Wrentham, MA (NV Certificate Holder) Signed D. E. Tuttle (Authorized Representative)

CERTIFICATE OF INSPECTION

I, the undersigned, holding a valid commission issued by the National Board of Boiler and Pressure Vessel Inspectors and the State or ~~Province~~ of MA and employed by HSB - CT of Hartford, CT have inspected the valve described in this Data Report on 4-27, 2005 and state that to the best of my knowledge and belief, the N Certificate Holder has constructed this valve in accordance with the ASME Code, Section III, Division 1.

By signing this certificate, neither the Inspector nor his employer makes any warrant, expressed or implied, concerning the component described in this Data Report. Furthermore, neither the Inspector nor his employer shall be liable in any manner for any personal injury or property damage or a loss of any kind arising from or connected with this inspection.

Date April 28 '05 Signed [illegible] (Authorized Inspector) Commissions MA-1420 A, N, I (Nat'l. Bd. (incl. Endorsements) and state or prov. and no.)

1.2

PLAN No 2-1954

ENERGY NORTHWEST
People·Vision·Solutions

FORM NIS-2 OWNER'S REPORT FOR REPAIRS OR REPLACEMENTS
As Required By The Provisions Of The ASME Code Section XI

Date: 06/11/05
Sheet: 1 Of 1
Unit: Not Applicable

1. **Owner:** Energy Northwest
   Address: Columbia Generating Station, North Power Plant Loop, Richland, Washington, 99352
2. **Plant:** Columbia Generating Station
   Address: Columbia Generating Station, North Power Plant Loop, Richland, Washington, 99352
3. **(a) Work Performed By:** Energy Northwest
   (b) Repair Organization P.O. No, Job No, etc.: Energy Northwest
   (c) Type Code Symbol Stamp: Not Applicable
   (d) Certificate Of Authorization No.: Not Applicable
   (e) Expiration Date: Not Applicable
4. **Identification Of System:** Reactor Closed Cooling (RCC) System
5. **(a) Applicable Construction Code:** ASME Section III, Code Class 3, 1971 Edition with Winter 1973 Addenda, Code Case: None
   (b) Applicable Edition Of ASME Section XI Utilized For Repairs Or Replacements: 1989 Edition with no Addenda, Code Case: None
6. **Identification Of Components Repaired Or Replaced And Replacement Components**

Name Of Component	Name Of Manufacturer	Manufacturer's Serial No	National Board No	Other I.D.	Year Built	Repaired, Replaced Or Replacement	ASME Code Stamped (Yes Or No) Code Class
RCC(5)-2	WPPSS*	RCC(5)-2-P1	N/A	N/A	1983	----------	Yes, Code Class 3
RCC-RV-34B	Lonergan	137916-2-2	N/A	N/A	1994	Replaced	Yes, Code Class 3
RCC-RV-34B	A/G**	98-09539	N/A	N/A	1999	Replacement	Yes, Code Class 3

7. **Description Of Work Performed:** Replaced existing relief valve RCC-RV-34B. The replacement work was performed as follows:
   1) Removed existing relief valve RCC-RV-34B, Serial No 137916-2-2.
   2) Installed replacement relief valve RCC-RV-34B, Serial No 98-09539.

NOTES -

1) * Company name changed from Washington Public Power Supply System (WPPSS) to Energy Northwest (EN) in 1999.
2) ** Anderson Greenwood
3) The existing ASME Code Stamped piping system applicable to the replacement relief valve RCC-RV-34B, Serial No 98-09539 is Reactor Closed Cooling (RCC) piping system RCC(5)-2-P1. This piping system is certified to comply with ASME Section III, Code Class 3, 1971 Edition with Winter 1973 Addenda requirements.
4) The replacement relief valve RCC-RV-34B, Serial No 98-09539 is certified to comply with ASME Section III, Code Class 3, 1971 Edition with Winter 1971 Addenda requirements.

PLAN No 2-1954

ENERGY NORTHWEST
People·Vision·Solutions

FORM NIS-2 OWNER'S REPORT FOR REPAIRS OR REPLACEMENTS (Back)

8 Tests Conducted: Hydrostatic [ ] *Pneumatic* [ ] *Nominal Operating Pressure* [ ] *None* [X]
Test Pressure: Psig *Test Temperature:* °F
Component Design Pressure: Psig *Temperature:* °F

9. Remarks (Applicable Manufacturer's Data Reports to be attached): See attached NV-1 Code Data Report for the replacement valve RCC-RV-34B, Serial No 98-09539.

CERTIFICATE OF COMPLIANCE

We certify that the statements made in this Owner's Report are correct and this replacement *conforms to the rules of the ASME Code, Section XI.*
Type Code Symbol Stamp: Not Applicable
Certificate Of Authorization No.: Not Applicable
Expiration Date: Not Applicable

Prepared By Kuldip Singh - Program Lead Engineer (PLE) *Signed By* Kuldip Singh - Program Lead Engineer (PLE)
Date 6/13/05 *Date* 6/13/05

CERTIFICATE OF INSERVICE INSPECTION

I, the undersigned, holding a valid commission issued by the National Board of Boiler and Pressure Vessel Inspectors and the State of Washington *and employed by* Hartford Steam Boiler Of Connecticut of Hartford, Connecticut *have inspected the components described in this Owner's Report during the period* 3/28/05 *to* 6/24/2005 *and state to the best of my knowledge and belief, the Owner has performed examinations and taken corrective measures described in this Owner's Report in accordance with the requirements of the ASME Code, Section XI.*
By signing this certificate neither the Inspector nor his employer makes any warranty, expressed or implied, concerning the examinations and corrective measures described in this Owner's Report. Furthermore, neither the Inspector nor his employer shall be liable in any manner for any personal injury or property damage or a loss of any kind arising from or connected with this inspection.

Inspector's Signature *Commissions* 10655W A, B, N, I
National Board, State, and Endorsements

Date 6/24/2005

PLAN No. 2-1954 PAGE 12/13

S/O S564090000 .002 P.O. 00300804

FORM NV-1 CERTIFICATE HOLDERS' DATA REPORT FOR PRESSURE OR VACUUM RELIEF VALVES*

As Required by the Provisions of the ASME Code, Section III, Division 1

1. Manufactured and certified by ANDERSON, GREENWOOD & CO. 3950 GREENBRIAR, STAFFORD, TX 77477 (name and address of NV Certificate Holder)

2. Manufactured for WASHINGTON PUBLIC POWER SUPPLY, P.O. BOX 968, RICHLAND, WA 99352 (name and address of Purchaser)

3. Location of installation WNP-2 WHS COMPLEX, WHSE 1 NORTH POWER PLANT LOOP, RICHLAND, WA 99352 (name and address)

4. Valve NJL14J-DS121-DG0265 (model no., series no.) Orifice size 0.312 (in.) Nom. inlet size 3/4 (in.) Outlet size 1 (in.)

5. ASME Code, Section III, Division 1: 1971 (edition) W-71 (addenda date) 3 (class) NA (Code Case no.)

6. Type Spring (spring, pilot or power operated) 265 (set pressure, psig) Fixed (blowdown, psi) 70°F (rated temp.) 398 (hydro. test, psig, inlet) at Ambient °F

7. Identification 98-09539 (Cert. Holder's serial no.) NA (CRN) N11.1167 R/A (drawing no.) NA (Nat'l. Bd. no.) 1999 (year built)

8. Control ring settings NA CBOM N07.0006.003 R/A

9. Pressure retaining items: RCC-RV-34B

	Serial No. or Identification	Mat'l. Spec., Including Type or Grade	Tensile Strength
Body/Bonnet	B824-6	SA216-WCB	70
~~Bonnet or Yoke~~ Inl Flg.	621YNF	SA105	70
~~Support Rods~~ Out Flg.	448ZNF	SA105	70
~~Nozzle~~ - Base	B800-2	SA351-CF8M	75
Disk	B728	SA479-316	75
Spring Washers/Step Spring	B713	SA479-316	75
Adjusting Screws /screw Guide	704019	SA479-316	75
~~Spindle~~ - Stem	B762	SA479-316	75
Spring	4500H	A313-316	*
Bolting- Screw Comp.	B825	SA479-316	75
Other Items- Cap	B722	SA479-316	75
Gag Screw	B765	SA479-316	75

10. Relieving capacity 23.6 (steam or fluid, lb/hr) @ 10% (psi) overpressure as certified by the National Board 1/25/85 (date)

11. Remarks: *Spring is exempt from material requirements of NC-2000 but meets design requirements of NC-3595.

CERTIFICATION OF DESIGN

Design Specification certified by Abbas A. Mostala P.E. State WA Reg. no. 28777

Design Report certified by NA P.E. State NA Reg. no. NA

CERTIFICATE OF COMPLIANCE

We certify that the statements made in this report are correct and that this valve conforms to the rules for construction of the ASME Code, Section III, Division 1.

NV Certificate of Authorization No. N-2825 Expires 9/10/99

Date 1/26/99 Name Anderson, Greenwood & Co. (NV Certificate Holder) Signed Joseph A. Parker (authorized representative)

*Supplemental information in form of lists, sketches, or drawings may be used provided (1) size is 8½ × 11, (2) information in items 1 through 4 on this Data Report is included on each sheet, (3) each sheet is numbered and the number of sheets is recorded at the top of this form.

(12/88) This form (E00042) may be obtained from the Order Dept., ASME, 22 Law Drive, Box 2300, Fairfield, NJ 07007-2300.

FORM NV-1 (Back — Pg. 2 of 2)

Certificate Holder's Serial No. 98-09539

CERTIFICATE OF INSPECTION

I, the undersigned, holding a valid commission issued by the National Board of Boiler and Pressure Vessel Inspectors and the State or Province of TX and employed by C.U.I.C. of Boston, MA have inspected the valve described in this Data Report on 1-26-99, and state that to the best of my knowledge and belief, the Certificate Holder has constructed this valve in accordance with the ASME Code, Section III, Division 1.

By signing this certificate neither the inspector nor his employer makes any warranty, expressed or implied, concerning the component described in this Data Report. Furthermore, neither the inspector nor his employer shall be liable in any manner for any personal injury or property damage or a loss of any kind arising from or connected with this inspection.

Date 1-26-99 Signed [signature] (Authorized Inspector) Commissions Tex 803 (Nat'l. Bd. (incl. endorsements) and state or prov. and no.)

PLAN No 2-1955

ENERGY NORTHWEST
People·Vision·Solutions

FORM NIS-2 OWNER'S REPORT FOR REPAIRS OR REPLACEMENTS
As Required By The Provisions Of The ASME Code Section XI

Date: 07/15/05
Sheet: 1 Of 2
Unit: Not Applicable

1. **Owner:** Energy Northwest
   Address: Columbia Generating Station, North Power Plant Loop, Richland, Washington, 99352
2. **Plant:** Columbia Generating Station
   Address: Columbia Generating Station, North Power Plant Loop, Richland, Washington, 99352
3. **(a) Work Performed By:** Energy Northwest
   (b) Repair Organization P.O. No, Job No, etc.: Energy Northwest
   (c) Type Code Symbol Stamp: Not Applicable
   (d) Certificate Of Authorization No.: Not Applicable
   (e) Expiration Date: Not Applicable
4. **Identification Of System:** Main Steam (MS) System
5. **(a) Applicable Construction Code:** ASME Section III, Code Class 1, 1971 Edition with Winter 1973 Addenda, Code Case: None
   (b) Applicable Edition Of ASME Section XI Utilized For Repairs Or Replacements: 1989 Edition with no Addenda, Code Case: None
6. **Identification Of Components Repaired Or Replaced And Replacement Components**

Name Of Component	Name Of Manufacturer	Manufacturer's Serial No	National Board No	Other I.D.	Year Built	Repaired, Replaced Or Replacement	ASME Code Stamped (Yes Or No) Code Class
B22-G001D	WPPSS*	B22-G001D-P1	N/A	N/A	1983	----------	Yes, Code Class 1

7. **Description Of Work Performed:** Replaced existing "Superbolt" nuts for the relief valve MS-RV-3D inlet joint. The replacement work was performed as follows:
   1) Removed twelve (12) existing "Superbolt" nuts for the relief valve inlet joint.
   2) Performed VT-1 visual examination on twelve (12) new "Superbolt" nuts for the relief valve inlet joint. VT-1 visual examination results acceptable.
   3) Performed VT-3 visual examination on twelve (12) existing studs for the relief valve inlet joint. VT-3 visual examination results acceptable.
   4) Installed VT-1 visually examined twelve (12) new "Superbolts" nuts for the relief valve inlet joint.
   5) Performed VT-2 visual examination during pressure test to confirm pressure boundary integrity of the relief valve inlet joint. No evidence of leakage during the pressure test.

NOTES -

1) * Company name changed from Washington Public Power Supply System (WPPSS) to Energy Northwest in 1999.
2) The existing ASME Code Stamped piping system in which relief valve MS-RV-3D is installed is Main Steam (MS) piping system B22-G001D-P1. This piping system is certified to comply with ASME Section III, Code Class 1, 1971 Edition with Winter 1973 Addenda requirements.
3) The relief valve MS-RV-3D is certified to comply with ASME Section III, Code Class 1, 1971 Edition with no Addenda requirements.

PLAN No 2-1955

ENERGY NORTHWEST
People·Vision·Solutions

FORM NIS-2 OWNER'S REPORT FOR REPAIRS OR REPLACEMENTS (Back)

8 Tests Conducted: Hydrostatic ☐ *Pneumatic* ☐ *Nominal Operating Pressure* ☐ *Other* ☒

Test Pressure: 1020 Psig *Test Temperature:* 170° F

Component Design Pressure: 1250 Psig *Temperature:* 575° F

9. Remarks (Applicable Manufacturer's Data Reports to be attached): None

1) * The test pressure and the test temperature on the relief valve inlet joint was recorded during ASME Section XI pressure test which was performed in accordance with PPM No OSP-RPV-R801 "Reactor Pressure Vessel Leakage Test".

CERTIFICATE OF COMPLIANCE

We certify that the statements made in this Owner's Report are correct and this replacement *conforms to the rules of the ASME Code, Section XI.*

Type Code Symbol Stamp: Not Applicable

Certificate Of Authorization No.: Not Applicable

Expiration Date: Not Applicable

Prepared By Kuldip Singh - Program Lead Engineer (PLE) *Signed By* Kuldip Singh - Program Lead Engineer (PLE)

Date 7/15/05 *Date* 7/15/05

CERTIFICATE OF INSERVICE INSPECTION

I, the undersigned, holding a valid commission issued by the National Board of Boiler and Pressure Vessel Inspectors and the State of Washington *and employed by* Hartford Steam Boiler Of Connecticut of Hartford, Connecticut *have inspected the components described in this Owner's Report during the period* 5-22-2005 *to* 7-18-2005 *and state to the best of my knowledge and belief, the Owner has performed examinations and taken corrective measures described in this Owner's Report in accordance with the requirements of the ASME Code, Section XI.*

By signing this certificate neither the Inspector nor his employer makes any warranty, expressed or implied, concerning the examinations and corrective measures described in this Owner's Report. Furthermore, neither the Inspector nor his employer shall be liable in any manner for any personal injury or property damage or a loss of any kind arising from or connected with this inspection.

Inspector's Signature *Commissions* 1065SW A,B,N,I
National Board, State, and Endorsements

Date 7-18-2005

PLAN No 2-1956

ENERGY NORTHWEST
People·Vision·Solutions

FORM NIS-2 OWNER'S REPORT FOR REPAIRS OR REPLACEMENTS
As Required By The Provisions Of The ASME Code Section XI

Date: 07/21/05
Sheet: 1 Of 1
Unit: Not Applicable

1. **Owner:** Energy Northwest
   Address: Columbia Generating Station, North Power Plant Loop, Richland, Washington, 99352
2. **Plant:** Columbia Generating Station
   Address: Columbia Generating Station, North Power Plant Loop, Richland, Washington, 99352
3. **(a) Work Performed By:** Energy Northwest
   (b) Repair Organization P.O. No, Job No, etc.: Energy Northwest
   (c) Type Code Symbol Stamp: Not Applicable
   (d) Certificate Of Authorization No.: Not Applicable
   (e) Expiration Date: Not Applicable
4. **Identification Of System:** Equipment Drains Radioactive (EDR) System
5. **(a) Applicable Construction Code:** ASME Section III, Code Class 2, 1971 Edition with Winter 1973 Addenda, Code Case: None
   (b) Applicable Edition Of ASME Section XI Utilized For Repairs Or Replacements: 1989 Edition with no Addenda, Code Case: None
6. **Identification Of Components Repaired Or Replaced And Replacement Components**

Name Of Component	Name Of Manufacturer	Manufacturer's Serial No	National Board No	Other I.D.	Year Built	Repaired, Replaced Or Replacement	ASME Code Stamped (Yes Or No) Code Class
EDR(48)-1	WPPSS*	EDR(48)-1-P1	N/A	N/A	1983	----------	Yes, Code Class 2
EDR-V-18	ITT Engineering	89-58127-1-2	WR7727	N/A	1990	Replaced	Yes, Code Class 2
EDR-V-18	Enertech	11371	N/A	N/A	2005	Replacement	Yes, Code Class 2

7. **Description Of Work Performed:** Replaced existing valve EDR-V-18. The replacement work was performed as follows:

1) Removed existing valve EDR-V-18, Serial No 89-58127-1-2.
2) Beveled cut pipe ends.
3) Installed replacement piping material such as flanges and pipe.
4) Made required circumferential butt welds.
5) Performed visual examination on the final circumferential butt welds. Visual examination results acceptable.
6) Performed radiographic (RT) examination on the final circumferential butt welds. Radiographic (RT) examination results acceptable accept for circumferential butt weld XI-12. Weld XI-12 had an unacceptable indication which was removed by mechanical means. Prepped the cavity for weld repair. Performed liquid penetrant (PT) examination on the cavity. Liquid penetrant (PT) examination results acceptable. Weld repaired the cavity. Performed visual examination on the final weld repaired surfaces. Visual examination results acceptable. Performed radiographic (RT) examination on the final circumferential butt weld XI-12. Radiographic (RT) examination results acceptable acceptable.
7) Installed replacement valve EDR-V-18, Serial No 11371.
8) Installed bolting material associated with the bolted flanged joints for valve EDR-V-18, Serial No 11371.
9) Performed VT-2 visual examination during pressure test to confirm pressure boundary integrity of the joints. No evidence of leakage during the pressure test.
10) Installed pipe plug for the test port.

NOTES -

1) * Company name changed from Washington Public Power Supply System (WPPSS) to Energy Northwest (EN) in 1999.
2) The existing ASME Code Stamped piping system in which the replacement valve EDR-V-18, Serial No 11371 was installed is Equipment Drains Radioactive (EDR) piping system EDR(48)-1-P1. This piping system is certified to comply with ASME Section III, Code Class 2, 1971 Edition with Winter 1973 Addenda requirements.
3) The replacement valve EDR-V-18, Serial No 11371 is certified to comply with ASME Section III, Code Class 2, 1998 Edition with no Addenda requirements.

PLAN No 2-1956

ENERGY NORTHWEST
People·Vision·Solutions

FORM NIS-2 OWNER'S REPORT FOR REPAIRS OR REPLACEMENTS (Back)

8 Tests Conducted: Hydrostatic ☐ Pneumatic ☐ Nominal Operating Pressure ☐ Other ☐

Test Pressure: 38.9* Psig — Test Temperature: 80.6*° F

Component Design Pressure: 70 Psig — Temperature: 150° F

9. Remarks (Applicable Manufacturer's Data Reports to be attached): 1) See attached NPV-1 Code Data Report for the replacement valve EDR-V-18, Serial No 11371. 2) * VT-2 visual examination to confirm pressure boundary integrity of the valve EDR-V-18 containment side bolted flanged joint was performed during 10CFR50, Appendix J Local Leak Rate Test (LLRT). 3) VT-2 visual examination to confirm pressure boundary integrity of the remaining bolted flanged joint and welded joints was performed as follows: The normal operating pressure was achieved by filling the sump to the normal operating level. Ten (10) minute hold time was applied after the sump was filled to the normal operating level.

CERTIFICATE OF COMPLIANCE

We certify that the statements made in this Owner's Report are correct and this replacement *conforms to the rules of the ASME Code, Section XI.*

Type Code Symbol Stamp: Not Applicable

Certificate Of Authorization No.: Not Applicable

Expiration Date: Not Applicable

Prepared By Kuldip Singh - Program Lead Engineer (PLE) — *Signed By* Kuldip Singh - Program Lead Engineer (PLE)

Date 7/21/05 — *Date* 7/21/05

CERTIFICATE OF INSERVICE INSPECTION

I, the undersigned, holding a valid commission issued by the National Board of Boiler and Pressure Vessel Inspectors and the State of Washington *and employed by* Hartford Steam Boiler Of Connecticut of Hartford, Connecticut *have inspected the components described in this Owner's Report during the period* 5-6-2005 *to* 7-22-2005 *and state to the best of my knowledge and belief, the Owner has performed examinations and taken corrective measures described in this Owner's Report in accordance with the requirements of the ASME Code, Section XI.*

By signing this certificate neither the Inspector nor his employer makes any warranty, expressed or implied, concerning the examinations and corrective measures described in this Owner's Report. Furthermore, neither the Inspector nor his employer shall be liable in any manner for any personal injury or property damage or a loss of any kind arising from or connected with this inspection.

Inspector's Signature — *Commissions* 10655W A, B, N, E — National Board, State, and Endorsements

Date 7-22-2005

PLAN No. 2-1956
Philip Singh 7/20/05.

FORM NPV-1 CERTIFICATE HOLDERS' DATA REPORT FOR NUCLEAR PUMPS OR VALVES*
As Required by the Provisions of the ASME Code, Section III, Division 1

1. Manufactured and certified by Enertech, A Div. of Curtiss-Wright Flow Control Corp.; 2950 Birch St.; Brea, CA 92821
(name and address of N Certificate Holder)

2. Manufactured for Energy Northwest; P.O. Box 968; Richland, WA 99352-0968
(name and address of Purchaser)

3. Location of Installation Columbia Generating Station; North Powerplant Loop; Richland, WA 99352
(name and address)

4. Model No., Series No., or Type MAK Drawing MD21220 Rev. D CRN None

5. ASME Code, Section III, Division 1: 1998 (edition) No (addenda date) 2 (class) None (Code Case no.)

6. Pump or valve Permaseat Valve Nominal inlet size 3 (in.) Outlet size 3 (in.)

7. Material: Body SA-182 Gr. F316 Bonnet N/A Disk SA-182 Gr. F316 Bolting SA-193 Gr. B8

(a) Cert. Holder's Serial No.	(b) Nat'l Board No.	(c) Body Serial No.	(d) Bonnet Serial No.	(e) Disk Serial No.
11370	None	LBJ-9098	None	LAX-8787
11371	None	LBJ-9099	None	LAX-8791

VALVE EDR-V-18, S/N 11371

* Supplemental information in form of lists, sketches, or drawings may be used provided (1) size is 8½ × 11, (2) information in items 1 through 4 on this Data Report is included on each sheet, (3) each sheet is numbered and the number of sheets is recorded at the top of this form.

Certificate Holder's Serial No. 11370 & 11371

8. Design conditions 150 (pressure) psi 150 (temperature) °F or valve pressure class 300 (1)

9. Cold working pressure 720 psi at 100°F

10. Hydrostatic test 1100 psi. Disk differential test pressure 305 psi

11. Remarks: Qty. 2, Enertech Project Number 810086

Cover Plate Mat'l: SA-479 Type 316

CERTIFICATION OF DESIGN

Design Specification certified by Jack R. Cole, Jr. P.E. State WA Reg. no. 20653

Design Report certified by Ira J. Silverman P.E. State CA Reg. no. 23241

CERTIFICATE OF COMPLIANCE

We certify that the statements made in this report are correct and that this pump or valve conforms to the rules for construction of the ASME Code, Section III, Division 1.

N Certificate of Authorization No. N-2826 Expires 10/11/05

Date 4/18/05 Name Enertech, A Div. of Curtiss-Wright Flow Control Corp. (N Certificate Holder) Signed Loretta Anaya (authorized representative)

CERTIFICATE OF INSPECTION

I, the undersigned, holding a valid commission issued by the National Board of Boiler and Pressure Vessel Inspectors and the State or Province of California and employed by HSB CT of Connecticut have inspected the pump, or valve, described in this Data Report on 4/18/05, and state that to the best of my knowledge and belief, the Certificate Holder has constructed this pump, or valve, in accordance with the ASME Code, Section III, Division 1.

By signing this certificate, neither the inspector nor his employer makes any warranty, expressed or implied, concerning the component described in this Data Report. Furthermore, neither the inspector nor his employer shall be liable in any manner for any personal injury or property damage or a loss of any kind arising from or connected with this inspection.

Date 4/18/05 Signed [illegible] (Authorized Inspector) Commissions CA1494. (Nat'l. Bd. (incl. endorsements) and state or prov. and no.)

(1) For manually operated valves only.

ENERGY NORTHWEST
People·Vision·Solutions

FORM NIS-2 OWNER'S REPORT FOR REPAIRS OR REPLACEMENTS
As Required By The Provisions Of The ASME Code Section XI

Date: 07/21/05
Sheet: 1 Of 3
Unit: Not Applicable

1. Owner: Energy Northwest
Address: Columbia Generating Station, North Power Plant Loop, Richland, Washington, 99352
2. Plant: Columbia Generating Station
Address: Columbia Generating Station, North Power Plant Loop, Richland, Washington, 99352
3. (a) Work Performed By: Energy Northwest
(b) Repair Organization P.O. No, Job No, etc.: Energy Northwest
(c) Type Code Symbol Stamp: Not Applicable
(d) Certificate Of Authorization No.: Not Applicable
(e) Expiration Date: Not Applicable
4. Identification Of System: Floor Drains Radioactive (FDR) System
5. (a) Applicable Construction Code: ASME Section III, Code Class 2, 1971 Edition with Winter 1973 Addenda, Code Case: None
(b) Applicable Edition Of ASME Section XI Utilized For Repairs Or Replacements: 1989 Edition with no Addenda, Code Case: None
6. Identification Of Components Repaired Or Replaced And Replacement Components

Name Of Component	Name Of Manufacturer	Manufacturer's Serial No	National Board No	Other I.D.	Year Built	Repaired, Replaced Or Replacement	ASME Code Stamped (Yes Or No) Code Class
FDR(48)-1	WPPSS*	FDR(48)-1-P1	N/A	N/A	1983	----------	Yes, Code Class 2
FDR-V-3	ITT Engineering	89-58127-2-1	WR7728	N/A	1990	Replaced	Yes, Code Class 2
FDR-V-3	Enertech	11373	N/A	N/A	2005	Replacement	Yes, Code Class 2
FDR-V-4	ITT Engineering	89-58127-2-2	WR7729	N/A	1990	Replaced	Yes, Code Class 2
FDR-V-4	Enertech	11372	N/A	N/A	2005	Replacement	Yes, Code Class 2
FDR-V-15	ITT Engineering	89-58127-1-1	WR7726	N/A	1990	Replaced	Yes, Code Class 2
FDR-V-15	Enertech	11370	N/A	N/A	2005	Replacement	Yes, Code Class 2
FDR-V-570	Borg Warner	13879	N/A	N/A	1977	Replaced	Yes, Code Class 1
FDR-V-570	Borg Warner	12531	N/A	N/A	1976	Replacement	Yes, Code Class 1
FDR-V-614	Borg Warner	13888	N/A	N/A	1977	Replaced	Yes, Code Class 1
FDR-V-614	Borg Warner	12533	N/A	N/A	1976	Replacement	Yes, Code Class 1
FDR-V-647	Borg Warner	22699	N/A	N/A	1977	Replaced	Yes, Code Class 1
FDR-V-647	Borg Warner	12534	N/A	N/A	1976	Replacement	Yes, Code Class 1

7. Description Of Work Performed: Replaced existing valves and associated piping material. The replacement work was performed as follows:

VALVES FDR-V-3, FDR-V-4 AND FDR-V-15

1) Removed existing valves FDR-V-3, FDR-V-4 and FDR-V-15.
2) Beveled cut pipe ends.
3) Installed replacement piping material such as flanges, elbow and pipe.
4) Made required branch connection welds.
5) Performed visual examination on the final branch connection welds. Visual examination results acceptable.
6) Performed liquid penetrant (PT) examination on the final branch connection welds. Liquid penetrant (PT) examination results acceptable.
7) Made required circumferential butt welds.
8) Performed visual examination on the final circumferential butt welds. Visual examination results acceptable.
9) Performed radiographic (RT) examination on the final circumferential butt welds. Radiographic (RT) examination results acceptable accept for circumferential butt weld XI-1. Weld XI-1 had an unacceptable indication which was removed by mechanical means. Prepped the cavity for weld repair. Performed liquid penetrant (PT) examination on the cavity. Liquid penetrant (PT) examination results acceptable. Weld repaired the cavity. Performed visual examination on the final weld repaired surfaces. Visual examination results acceptable. Performed radiographic (RT) examination on the final circumferential butt weld XI-1. Radiographic (RT) examination results acceptable acceptable..
10) Installed replacement valves FDR-V-3, FDR-V-4 and FDR-V-15.
11) Installed bolting material associated with the bolted flanged joints for valves FDR-V-3, FDR-V-4 and FDR-V-15.

Continued On Sheet 2 of 3

PLAN No 2-1957

ENERGY NORTHWEST
People·Vision·Solutions

FORM NIS-2 OWNER'S REPORT FOR REPAIRS OR REPLACEMENTS (Back)

8 Tests Conducted: Hydrostatic ☐ **Pneumatic** ☐ **Nominal Operating Pressure** ☐ **Other** ☒

Test Pressure: 38.85* Psig **Test Temperature:** 80.6*° F
Component Design Pressure: 70 Psig **Temperature:** 150° F

9. Remarks (Applicable Manufacturer's Data Reports to be attached): 1) See attached NPV-1 Code Data Reports for the following replacement valves:

EPN No	Serial No
FDR-V-3	11373
FDR-V-4	11372
FDR-V-15	11370
FDR-V-570	12531
FDR-V-614	12533
FDR-V-647	12534

2) * VT-2 visual examination to confirm pressure boundary integrity of the valve EDR-V-15 containment side bolted flanged joint was performed during 10CFR50, Appendix J Local Leak Rate Test (LLRT).

CERTIFICATE OF COMPLIANCE

We certify that the statements made in this Owner's Report are correct and this replacement ***conforms to the rules of the ASME Code, Section XI.***
Type Code Symbol Stamp: Not Applicable
Certificate Of Authorization No.: Not Applicable
Expiration Date: Not Applicable

Prepared By Kuldip Singh - Program Lead Engineer (PLE) ***Signed By*** Kuldip Singh - Program Lead Engineer (PLE)

Date 7/21/05 ***Date*** 7/21/05

CERTIFICATE OF INSERVICE INSPECTION

I, the undersigned, holding a valid commission issued by the National Board of Boiler and Pressure Vessel Inspectors and the State of Washington ***and employed by*** Hartford Steam Boiler Of Connecticut of Hartford, Connecticut ***have inspected the components described in this Owner's Report during the period*** 5-7-2005 ***to*** 7-22-2005 ***and state to the best of my knowledge and belief, the Owner has performed examinations and taken corrective measures described in this Owner's Report in accordance with the requirements of the ASME Code, Section XI.***
By signing this certificate neither the Inspector nor his employer makes any warranty, expressed or implied, concerning the examinations and corrective measures described in this Owner's Report. Furthermore, neither the Inspector nor his employer shall be liable in any manner for any personal injury or property damage or a loss of any kind arising from or connected with this inspection.

Inspector's Signature ***Commissions*** 1065540 A, B, N, I
National Board, State, and Endorsements

Date 7-22-2005

ENERGY NORTHWEST
People·Vision·Solutions

FORM NIS-2 OWNER'S REPORT FOR REPAIRS OR REPLACEMENTS
As Required By The Provisions Of The ASME Code Section XI

Date: 07/21/05
Sheet: 2 Of 3
Unit: Not Applicable

1. **Owner:** Energy Northwest
   Address: Columbia Generating Station, North Power Plant Loop, Richland, Washington, 99352
2. **Plant:** Columbia Generating Station
   Address: Columbia Generating Station, North Power Plant Loop, Richland, Washington, 99352
3. **(a) Work Performed By:** Energy Northwest
   (b) Repair Organization P.O. No, Job No, etc.: Energy Northwest
   (c) Type Code Symbol Stamp: Not Applicable
   (d) Certificate Of Authorization No.: Not Applicable
   (e) Expiration Date: Not Applicable
4. **Identification Of System:** Floor Drains Radioactive (FDR) System
5. **(a) Applicable Construction Code:** ASME Section III, Code Class 2, 1971 Edition with Winter 1973 Addenda, Code Case: None
   (b) Applicable Edition Of ASME Section XI Utilized For Repairs Or Replacements: 1989 Edition with no Addenda, Code Case: None
6. **Identification Of Components Repaired Or Replaced And Replacement Components**

Name Of Component	Name Of Manufacturer	Manufacturer's Serial No	National Board No	Other I.D.	Year Built	Repaired, Replaced Or Replacement	ASME Code Stamped (Yes Or No) Code Class
FDR(48)-1	WPPSS*	FDR(48)-1-P1	N/A	N/A	1983	----------	Yes, Code Class 2
FDR-V-3	ITT Engineering	89-58127-2-1	WR7728	N/A	1990	Replaced	Yes, Code Class 2
FDR-V-3	Enertech	11373	N/A	N/A	2005	Replacement	Yes, Code Class 2
FDR-V-4	ITT Engineering	89-58127-2-2	WR7729	N/A	1990	Replaced	Yes, Code Class 2
FDR-V-4	Enertech	11372	N/A	N/A	2005	Replacement	Yes, Code Class 2
FDR-V-15	ITT Engineering	89-58127-1-1	WR7726	N/A	1990	Replaced	Yes, Code Class 2
FDR-V-15	Enertech	11370	N/A	N/A	2005	Replacement	Yes, Code Class 2
FDR-V-570	Borg Warner	13879	N/A	N/A	1977	Replaced	Yes, Code Class 1
FDR-V-570	Borg Warner	12531	N/A	N/A	1976	Replacement	Yes, Code Class 1
FDR-V-614	Borg Warner	13888	N/A	N/A	1977	Replaced	Yes, Code Class 1
FDR-V-614	Borg Warner	12533	N/A	N/A	1976	Replacement	Yes, Code Class 1
FDR-V-647	Borg Warner	22699	N/A	N/A	1977	Replaced	Yes, Code Class 1
FDR-V-647	Borg Warner	12534	N/A	N/A	1976	Replacement	Yes, Code Class 1

7. **Description Of Work Performed: Continuation From Sheet 1 of 3**

VALVES FDR-V-3, FDR-V-4 AND FDR-V-15

12) Performed VT-2 visual examination during pressure test to confirm pressure boundary integrity of the joints. No evidence of leakage during the pressure test.
13) Installed pipe plug for the test port.

VALVES FDR-V-570, FDR-V-614 AND FDR-V-647

1) Removed existing valves FDR-V-570, FDR-V-614 and FDR-V-647.
2) Installed replacement piping material such as elbows and pipe.
3) Installed replacement valves FDR-V-570, FDR-V-614 and FDR-V-647.
4) Made required socket welds.
5) Performed visual examination on the final socket welds. Visual examination results acceptable.
6) Performed liquid penetrant (PT) examination on the final socket welds. Liquid penetrant (PT) examination results acceptable.

NOTES -

1) * Company name changed from Washington Public Power Supply System (WPPSS) to Energy Northwest (EN) in 1999.

Continued On Sheet 3 of 3

ENERGY NORTHWEST
People·Vision·Solutions

FORM NIS-2 OWNER'S REPORT FOR REPAIRS OR REPLACEMENTS
As Required By The Provisions Of The ASME Code Section XI

Date: 07/21/05
Sheet: 3 Of 3
Unit: Not Applicable

1. **Owner:** Energy Northwest
   Address: Columbia Generating Station, North Power Plant Loop, Richland, Washington, 99352
2. **Plant:** Columbia Generating Station
   Address: Columbia Generating Station, North Power Plant Loop, Richland, Washington, 99352
3. **(a) Work Performed By:** Energy Northwest
   (b) Repair Organization P.O. No, Job No, etc.: Energy Northwest
   (c) Type Code Symbol Stamp: Not Applicable
   (d) Certificate Of Authorization No.: Not Applicable
   (e) Expiration Date: Not Applicable
4. **Identification Of System:** Floor Drains Radioactive (FDR) System
5. **(a) Applicable Construction Code:** ASME Section III, Code Class 2, 1971 Edition with Winter 1973 Addenda, Code Case: None
   (b) Applicable Edition Of ASME Section XI Utilized For Repairs Or Replacements: 1989 Edition with no Addenda, Code Case: None
6. **Identification Of Components Repaired Or Replaced And Replacement Components**

Name Of Component	Name Of Manufacturer	Manufacturer's Serial No	National Board No	Other I.D.	Year Built	Repaired, Replaced Or Replacement	ASME Code Stamped (Yes Or No) Code Class
FDR(48)-1	WPPSS*	FDR(48)-1-P1	N/A	N/A	1983	----------	Yes, Code Class 2
FDR-V-3	ITT Engineering	89-58127-2-1	WR7728	N/A	1990	Replaced	Yes, Code Class 2
FDR-V-3	Enertech	11373	N/A	N/A	2005	Replacement	Yes, Code Class 2
FDR-V-4	ITT Engineering	89-58127-2-2	WR7729	N/A	1990	Replaced	Yes, Code Class 2
FDR-V-4	Enertech	11372	N/A	N/A	2005	Replacement	Yes, Code Class 2
FDR-V-15	ITT Engineering	89-58127-1-1	WR7726	N/A	1990	Replaced	Yes, Code Class 2
FDR-V-15	Enertech	11370	N/A	N/A	2005	Replacement	Yes, Code Class 2
FDR-V-570	Borg Warner	13879	N/A	N/A	1977	Replaced	Yes, Code Class 1
FDR-V-570	Borg Warner	12531	N/A	N/A	1976	Replacement	Yes, Code Class 1
FDR-V-614	Borg Warner	13888	N/A	N/A	1977	Replaced	Yes, Code Class 1
FDR-V-614	Borg Warner	12533	N/A	N/A	1976	Replacement	Yes, Code Class 1
FDR-V-647	Borg Warner	22699	N/A	N/A	1977	Replaced	Yes, Code Class 1
FDR-V-647	Borg Warner	12534	N/A	N/A	1976	Replacement	Yes, Code Class 1

7. Description Of Work Performed: Continuation From Sheet 2 of 3

NOTES -

2) The existing ASME Code Stamped piping system in which the replacement valves FDR-V-3, FDR-V-4, FDR-V-15, FDR-V-570, FDR-V-614 and FDR-V-647 were installed is Floor Drains Radioactive (FDR) piping system FDR(48)-1-P1. This piping system is certified to comply with ASME Section III, Code Class 2, 1971 Edition with Winter 1973 Addenda requirements.
3) The replacement valves FDR-V-3, FDR-V-4 and FDR-V-15 are certified to comply with ASME Section III, Code Class 2, 1998 Edition with no Addenda requirements.
4) The replacement valves FDR-V-570, FDR-V-614 and FDR-V-647 are certified to comply with ASME Section III, Code Class 1, 1971 Edition with Winter 1973 Addenda requirements. ASME Section III, Code Class 1 valves for ASME Section III, Code Class 2 application.

9. Remarks: Continuation From Sheet 1 of 3

3) VT-2 visual examination to confirm pressure boundary integrity of welded joints XI-3, XI-12, XI-13, XI-20 and bolted flanged joints adjacent to these welded joints was performed as follows: The test pressure of 39 Psig at 80° F was attained using hydro cart to pressurize the joint using water as a test medium. Ten (10) minute hold time was is required after the test pressure was attained. 4) VT-2 visual examination to confirm pressure boundary integrity of the remaining welded joints XI-1 and XI-2 was performed as follows: The normal operating pressure was achieved by filling the sump to the normal operating level. Ten (10) minute hold time was applied after the sump was filled to the normal operating level.

PLAN No. 2-1957
Philip Bates
7/20/05.

FORM NPV-1 CERTIFICATE HOLDERS' DATA REPORT FOR NUCLEAR PUMPS OR VALVES*
As Required by the Provisions of the ASME Code, Section III, Division 1

1. Manufactured and certified by Enertech, A Div. of Curtiss-Wright Flow Control Corp.; 2950 Birch St.; Brea, CA 92821
(name and address of N Certificate Holder)

2. Manufactured for Energy Northwest; P.O. Box 968; Richland, WA 99352-0968
(name and address of Purchaser)

3. Location of Installation Columbia Generating Station; North Powerplant Loop; Richland, WA 99352
(name and address)

4. Model No., Series No., or Type MAK Drawing MD21230 Rev. D CRN None

5. ASME Code, Section III, Division 1: 1998 (edition) No (addenda date) 2 (class) None (Code Case no.)

6. Pump or valve Permaseat Valve Nominal Inlet size 3 (in.) Outlet size 3 (in.)

7. Material: Body SA-182 Gr. F316 Bonnet N/A Disk SA-182 Gr. F316 Bolting SA-193 Gr. B8

(a) Cert. Holder's Serial No.	(b) Nat'l Board No.	(c) Body Serial No.	(d) Bonnet Serial No.	(e) Disk Serial No.
11373	None	LBJ-9101	None	LAX-8789

VALVE FDR-V-3, S/N 11373

* Supplemental information in form of lists, sketches, or drawings may be used provided (1) size is 8½ × 11, (2) information in items 1 through 4 on this Data Report is included on each sheet, (3) each sheet is numbered and the number of sheets is recorded at the top of this form.

Certificate Holder's Serial No. 11373

8. Design conditions 150 (pressure) psi 150 (temperature) °F or valve pressure class 300 (1)

9. Cold working pressure 720 psi at 100°F

10. Hydrostatic test 1100 psi. Disk differential test pressure 305 psi

11. Remarks: Qty. 2, Enertech Project Number 810086

Cover Plate Mat'l: SA-479 Type 316

CERTIFICATION OF DESIGN

Design Specification certified by Jack R. Cole, Jr. P.E. State WA Reg. no. 20653

Design Report certified by Ira J. Silverman P.E. State CA Reg. no. 23241

CERTIFICATE OF COMPLIANCE

We certify that the statements made in this report are correct and that this pump or valve conforms to the rules for construction of the ASME Code, Section III, Division 1.

N Certificate of Authorization No. N-2826 Expires 10/11/05

Date 4/22/05 Name Enertech, A Div. of Curtiss-Wright Flow Control Corp. (N Certificate Holder) Signed (authorized representative)

CERTIFICATE OF INSPECTION

I, the undersigned, holding a valid commission issued by the National Board of Boiler and Pressure Vessel Inspectors and the State or Province of California and employed by HSB CT of Connecticut have inspected the pump, or valve, described in this Data Report on 4/22/05, and state that to the best of my knowledge and belief, the Certificate Holder has constructed this pump, or valve, in accordance with the ASME Code, Section III, Division 1.

By signing this certificate, neither the inspector nor his employer makes any warranty, expressed or implied, concerning the component described in this Data Report. Furthermore, neither the inspector nor his employer shall be liable in any manner for any personal injury or property damage or a loss of any kind arising from or connected with this inspection.

Date 4/22/05 Signed (Authorized Inspector) Commissions CA1494 [Nat'l. Bd. (incl. endorsements) and state or prov. and no.]

(1) For manually operated valves only.

PLAN No. 2-1957
Rudolph Bugeb
7/20/05

FORM NPV-1 CERTIFICATE HOLDERS' DATA REPORT FOR NUCLEAR PUMPS OR VALVES*

As Required by the Provisions of the ASME Code, Section III, Division 1

1. Manufactured and certified by Enertech, A Div. of Curtiss-Wright Flow Control Corp.; 2950 Birch St.; Brea, CA 92821
(name and address of N Certificate Holder)

2. Manufactured for Energy Northwest; P.O. Box 968; Richland, WA 99352-0968
(name and address of Purchaser)

3. Location of installation Columbia Generating Station; North Powerplant Loop; Richland, WA 99352
(name and address)

4. Model No., Series No., or Type MAK Drawing MD21230 Rev. D CRN None

5. ASME Code, Section III, Division 1: 1998 (edition) No (addenda date) 2 (class) None (Code Case no.)

6. Pump or valve Permaseat Valve Nominal inlet size 3 (in.) Outlet size 3 (in.)

7. Material: Body SA-182 Gr. F316 Bonnet N/A Disk SA-182 Gr. F316 Bolting SA-193 Gr. B8

(a) Cert. Holder's Serial No.	(b) Nat'l Board No.	(c) Body Serial No.	(d) Bonnet Serial No.	(e) Disk Serial No.
11372	None	LBJ-9100	None	LAX-8788

VALVE FDR-V-4, S/N 11372

* Supplemental information in form of lists, sketches, or drawings may be used provided (1) size is 8½ × 11, (2) information in items 1 through 4 on this Data Report is included on each sheet, (3) each sheet is numbered and the number of sheets is recorded at the top of this form.

Certificate Holder's Serial No. 11372

8. Design conditions 150 (pressure) psi 150 (temperature) °F or valve pressure class 300 (1)

9. Cold working pressure 720 psi at 100°F

10. Hydrostatic test 1100 psi. Disk differential test pressure 305 psi

11. Remarks: Qty. 1, Enertech Project Number 810086

Cover Plate Mat'l: SA-479 Type 316

CERTIFICATION OF DESIGN

Design Specification certified by Jack R. Cole, Jr. P.E. State WA Reg. no. 20653

Design Report certified by Ira J. Silverman P.E. State CA Reg. no. 23241

CERTIFICATE OF COMPLIANCE

We certify that the statements made in this report are correct and that this pump or valve conforms to the rules for construction of the ASME Code, Section III, Division 1.

N Certificate of Authorization No. N-2826 Expires 10/11/05

Date 4/18/05 Name Enertech, A Div. of Curtiss-Wright Flow Control Corp. (N Certificate Holder) Signed Loretta Anaya (authorized representative)

CERTIFICATE OF INSPECTION

I, the undersigned, holding a valid commission issued by the National Board of Boiler and Pressure Vessel Inspectors and the State or Province of California and employed by HSB CT of Connecticut have inspected the pump, or valve, described in this Data Report on 4/18/05, and state that to the best of my knowledge and belief, the Certificate Holder has constructed this pump, or valve, in accordance with the ASME Code, Section III, Division 1.

By signing this certificate, neither the inspector nor his employer makes any warranty, expressed or implied, concerning the component described in this Data Report. Furthermore, neither the inspector nor his employer shall be liable in any manner for any personal injury or property damage or a loss of any kind arising from or connected with this inspection.

Date 4/18/05 Signed [signature] (Authorized Inspector) Commissions CA1494 (Nat'l. Bd. (incl. endorsements) and state or prov. and no.)

(1) For manually operated valves only.

PLAN No. 2-1957

Philip Singh 7/20/05

FORM NPV-1 CERTIFICATE HOLDERS' DATA REPORT FOR NUCLEAR PUMPS OR VALVES*

As Required by the Provisions of the ASME Code, Section III, Division 1

1. Manufactured and certified by Enertech, A Div. of Curtiss-Wright Flow Control Corp.; 2950 Birch St.; Brea, CA 92821
(name and address of N Certificate Holder)

2. Manufactured for Energy Northwest; P.O. Box 968; Richland, WA 99352-0968
(name and address of Purchaser)

3. Location of Installation Columbia Generating Station; North Powerplant Loop; Richland, WA 99352
(name and address)

4. Model No., Series No., or Type MAK Drawing MD21220 Rev. D CRN None

5. ASME Code, Section III, Division 1: 1998 (edition) No (addenda date) 2 (class) None (Code Case no.)

6. Pump or valve Permaseat Valve Nominal Inlet size 3 (in.) Outlet size 3 (in.)

7. Material: Body SA-182 Gr. F316 Bonnet N/A Disk SA-182 Gr. F316 Bolting SA-193 Gr. B8

(a) Cert. Holder's Serial No.	(b) Nat'l Board No.	(c) Body Serial No.	(d) Bonnet Serial No.	(e) Disk Serial No.
11370	None	LBJ-9098	None	LAX-8787
11371	None	LBJ-9099	None	LAX-8791

VALVE FDR-V-15,S/N 11370

* Supplemental information in form of lists, sketches, or drawings may be used provided (1) size is 8½ × 11, (2) information in items 1 through 4 on this Data Report is included on each sheet, (3) each sheet is numbered and the number of sheets is recorded at the top of this form.

Certificate Holder's Serial No. 11370 & 11371

8. Design conditions 150 (pressure) psi 150 (temperature) °F or valve pressure class 300 (1)

9. Cold working pressure 720 psi at 100°F

10. Hydrostatic test 1100 psi. Disk differential test pressure 305 psi

11. Remarks: Qty. 2, Enertech Project Number 810086

Cover Plate Mat'l: SA-479 Type 316

CERTIFICATION OF DESIGN

Design Specification certified by Jack R. Cole, Jr. P.E. State WA Reg. no. 20653

Design Report certified by Ira J. Silverman P.E. State CA Reg. no. 23241

CERTIFICATE OF COMPLIANCE

We certify that the statements made in this report are correct and that this pump or valve conforms to the rules for construction of the ASME Code, Section III, Division 1.

N Certificate of Authorization No. N-2826 Expires 10/11/05

Date 4/18/05 Name Enertech, A Div. of Curtiss-Wright Flow Control Corp. (N Certificate Holder) Signed Loretta Quaye (authorized representative)

CERTIFICATE OF INSPECTION

I, the undersigned, holding a valid commission issued by the National Board of Boiler and Pressure Vessel Inspectors and the State or Province of California and employed by HSB CT of Connecticut have inspected the pump, or valve, described in this Data Report on 4/18/05, and state that to the best of my knowledge and belief, the Certificate Holder has constructed this pump, or valve, in accordance with the ASME Code, Section III, Division 1.

By signing this certificate, neither the inspector nor his employer makes any warranty, expressed or implied, concerning the component described in this Data Report. Furthermore, neither the inspector nor his employer shall be liable in any manner for any personal injury or property damage or a loss of any kind arising from or connected with this inspection.

Date 4/18/05 Signed [illegible] (Authorized Inspector) Commissions CA1494 (Nat'l. Bd. (incl. endorsements) and state or prov. and no.)

(1) For manually operated valves only.

PLAN No. 2-1957

Philip Swift 7/20/05.

FORM NPV-1 MANUFACTURERS' DATA REPORT FOR NUCLEAR PUMPS OR VALVES*

As Required by the Provisions of the ASME Code Rules

1. Manufactured by Nuclear Valve Division of Borg Warner, 7500 Tyrone Avenue, Van Nuys, Ca (Name & Address of Manufacturer) Order No. 47713

2. Manufactured for Bovee & Crail/G.E.R.I. P.O. Box 1040, Richland, Washington 99352 (Name and Address) Order No. 215-3261

3. Owner WPPSS Hanford #2 Job Site VALVE FDR-V-570, S/N 12531

4. Location of Plant Richland, Washington 99352

5. Pump or Valve Identification Nuclear Valve Div., P/N 76570, 3/4 Inch Y Type Globe Valve, SS Serial Numbers 12528 thru 12536 (9 Valves)
(Brief description of service for which equipment was designed)

(a) Drawing No. 76570 Prepared by Nuclear Valve Division of Borg Warner

(b) National Board No.

6. Design Conditions 3600 (Pressure) psi 100 (Temperature) °F

7. The material, design, construction, and workmanship complies with ASME Code Section III, Class 1

Edition 1971, Addenda Date Winter '73, Case No.

Mark No.	Material Spec. No.	Manufacturer	Remarks
(a) Castings			
Disc - Code 1M26, 1N77	Stellite #6		
Casting - 73876	NMS 71043	Rex Precision	
Machined - 73877		NV Division	
Stem - Code 1M12	SA564 Ty.630		
Bar Stock		Allen Fry Steel	MAR 31 1987
Machined - 73875		Emco, Inc.	RECEIVED QUALITY CONTR.
(b) Forgings		WBG BR C 15-16345A	
Body - Code 1L89	SA182 F316		
Forging - 75237		Compton Forge	
Machined - 75238		NV Division	
Assembly - 73898		NV Division	
Back Seat - Code 3EE, VV10, 52FF, 1L43	SA564 Ty.630		
Forged Stock		Ducommun Metals/Jorgensen Steel	
Machined -		NV Division	

*Supplemental sheets in form of lists, sketches or drawings may be used provided (1) size is 8½" x 11", (2) information in items 1, 2, 5a and 5b on this data report is included on each sheet, and (3) each sheet is numbered and number of sheets is recorded at top of this form.

4

FORM NPV-1 (back)

Mark No.	Material Spec. No.	Manufacturer	Remarks
(c) Bolting			
(d) Other Parts			

8. Hydrostatic test 5400 - 5450 psi.

CERTIFICATION OF DESIGN

Design information on file at Nuclear Valve Div.of Borg Warner,7500 Tyrone Ave., Van Nuys,Ca.

Stress analysis report on file at NVD of Borg Warner, 7500 Tyrone Ave., Van Nuys, CA

Design specifications certified by David J. Murphy (1) Prof. Eng. State Wash. Reg. No. 12542

Stress analysis report certified by Byron Leonard Jr. (1) Prof. Eng. State CA Reg. No. E123

(1) Signature not required. List name only.

We certify that the statements made in this report are correct.

Date December 20 19 76 Signed Nuclear Valve Div. of Borg Warner (Manufacturer) By [signature]

Certificate of Authorization No. N-1254 expires October 27, 1978

CERTIFICATE OF SHOP INSPECTION

I, the undersigned, holding a valid commission issued by the National Board of Boiler and Pressure Vessel Inspectors and/or the State of Province of California and employed by Dept. of Bldg. & Safety of City of Los Angeles have inspected the equipment described in this Data Report on December 20 19 76, and state that to the best of my knowledge and belief, the Manufacturer has constructed this equipment in accordance with the applicable Subsections of ASME Code, Section III.

By signing this certificate, neither the Inspector nor his employer makes any warranty, expressed or implied, concerning the equipment described in this Data Report. Furthermore, neither the Inspector nor his employer shall be liable in any manner for any personal injury or property damage or a loss of any kind arising from or connected with this inspection.

WUG BR 2 15-16345A

Date December 20 19 76

[signature] (Inspector) Commissions California (National Board, State, Province and No.)

MAR 31 1977

RECEIVED QUALITY ASSURANCE
BY: [signature]

PLAN No. 2-1957

Philip Smith 7/20/05.

FORM NPV-1 MANUFACTURERS' DATA REPORT FOR NUCLEAR PUMPS OR VALVES*

As Required by the Provisions of the ASME Code Rules

1. Manufactured by Nuclear Valve Division of Borg Warner, 7500 Tyrone Avenue, Van Nuys, Ca Order No. 47713
(Name & Address of Manufacturer)

2. Manufactured for Bovee & Crail/G.E.R.I. P.O. Box 1040, Richland, Washington 99352 Order No. 215-3261
(Name and Address)

3. Owner WPPSS Hanford #2 Job Site VALVE FDR-V-614, S/N 12533

4. Location of Plant Richland, Washington 99352

5. Pump or Valve Identification Nuclear Valve Div., P/N 76570, 3/4 Inch Y Type Globe Valve, SS Serial Numbers 12528 thru 12536 (9 Valves)
(Brief description of service for which equipment was designed)

(a) Drawing No. 76570 Prepared by Nuclear Valve Division of Borg Warner

(b) National Board No.

6. Design Conditions 3600 (Pressure) psi 100 (Temperature) °F

7. The material, design, construction and workmanship complies with ASME Code Section III, Class 1

Edition 1971, Addenda Date Winter '73, Case No.

Mark No.	Material Spec. No.	Manufacturer	Remarks
(a) Castings			
Disc - Code 1M26-1N77-	Stellite #6		
Casting - 73876	NMS 71043	Rex Precision	
Machined - 73877		NV Division	
Stem - Code 1M12-	SA564 Ty.630		
Bar Stock		Allen Fry Steel	
Machined - 73875		Emco, Inc	
(b) Forgings		WBG BR C 15-16345A	
Body - Code 1L89-	SA182 F316		
Forging - 75237		Compton Forge	
Machined - 75238		NV Division	
Assembly - 73898		NV Division	
Back Seat - Code 3EE-VV10-52FF-1L43-	SA564 Ty.630		
Forged Stock		Ducommun Metals/Jorgensen Steel	
Machined -		NV Division	

*Supplemental sheets in form of lists, sketches or drawings may be used provided (1) size is 8½" x 11", (2) information in items 1, 2, 5a and 5b on this data report is included on each sheet, and (3) each sheet is numbered and number of sheets is recorded at top of this form.

4

FORM NPV-1 (back)

	Mark No.	Material Spec. No.	Manufacturer	Remarks
(c) Bolting				
(d) Other Parts				

8. Hydrostatic test 5400 - 5450 psi.

CERTIFICATION OF DESIGN

Design information on file at Nuclear Valve Div. of Borg Warner, 7500 Tyrone Ave., Van Nuys, Ca.
Stress analysis report on file at NVD of Borg Warner, 7500 Tyrone Ave., Van Nuys, CA
Design specifications certified by David J. Murphy (1) Prof. Eng. State Wash. Reg. No. 12542
Stress analysis report certified by Byron Leonard Jr. (1) Prof. Eng. State CA Reg. No. E123
(1) Signature not required. List name only.

We certify that the statements made in this report are correct.

Date December 20 19 76 Signed Nuclear Valve Div. of Borg Warner (Manufacturer) By [signature]

Certificate of Authorization No. N-1254 expires October 27, 1978

CERTIFICATE OF SHOP INSPECTION

I, the undersigned, holding a valid commission issued by the National Board of Boiler and Pressure Vessel Inspectors and/or the State of Province of California and employed by Dept. of Bldg. & Safety of City of Los Angeles have inspected the equipment described in this Data Report on December 20 19 76, and state that to the best of my knowledge and belief, the Manufacturer has constructed this equipment in accordance with the applicable Subsections of ASME Code, Section III.

By signing this certificate, neither the Inspector nor his employer makes any warranty, expressed or implied, concerning the equipment described in this Data Report. Furthermore, neither the Inspector nor his employer shall be liable in any manner for any personal injury or property damage or a loss of any kind arising from or connected with this inspection.

WBG BR < 15-16345A

Date December 20 19 76

[signature] (Inspector) Commissions California (National Board, State, Province and No.)

MAR 31 1980

BECHTEL QUALITY ... NIRC
BY: [signature]

PLAN NO. 2-1957

Philip Smith 7/20/05

FORM NPV-1 MANUFACTURERS' DATA REPORT FOR NUCLEAR PUMPS OR VALVES*

As Required by the Provisions of the ASME Code Rules

1. Manufactured by Nuclear Valve Division of Borg Warner, 7500 Tyrone Avenue, Van Nuys, Ca (Name & Address of Manufacturer) Order No. 47713

2. Manufactured for Bovee & Crail/G.E.R.I. P.O. Box 1040, Richland, Washington 99352 (Name and Address) Order No. 215-3261

3. Owner WPPSS Hanford #2 Job Site VALVE FDR-V-647, S/N 12534

4. Location of Plant Richland, Washington 99352

5. Pump or Valve Identification Nuclear Valve Div., P/N 76570, 3/4 Inch Y Type Globe Valve, SS Serial Numbers 12528 thru 12536 (9 Valves)
(Brief description of service for which equipment was designed)

(a) Drawing No. 76570 Prepared by Nuclear Valve Division of Borg Warner

(b) National Board No.

6. Design Conditions 3600 (Pressure) psi 100 (Temperature) °F

7. The material, design, construction, and workmanship complies with ASME Code Section III, Class 1

Edition 1971, Addenda Date Winter '73, Case No.

Mark No.	Material Spec. No.	Manufacturer	Remarks
(a) Castings			
Disc - Code 1M26, 1N77-	Stellite #6		
Casting - 73876	NMS 71043	Rex Precision	
Machined - 73877		NV Division	
Stem - Code 1M12 -	SA564 Ty.630		
Bar Stock		Allen Fry Steel	
Machined - 73875		Emco, Inc	
(b) Forgings		WBG BR 215-16345A	
Body - Code 1L89-	SA182 F316		
Forging - 75237		Compton Forge	
Machined - 75238		NV Division	
Assembly - 73898		NV Division	
Back Seat - Code 3EF, VV10, 52FF, 1L43-	SA564 Ty.630		
Forged Stock		Ducommun Metals/Jorgensen Steel	
Machined -		NV Division	

MAR 31 1987

*Supplemental sheets in form of lists, sketches or drawings may be used provided (1) size is 8½" x 11", (2) information in items 1, 2, 5a and 5b on this data report is included on each sheet, and (3) each sheet is numbered and number of sheets is recorded at top of this form.

4

FORM NPV-1 (back)

	Mark No.	Material Spec. No.	Manufacturer	Remarks
(c) Bolting				
(d) Other Parts				

8. Hydrostatic test 5400 - 5450 psi.

CERTIFICATION OF DESIGN

Design information on file at Nuclear Valve Div. of Borg Warner, 7500 Tyrone Ave., Van Nuys, Ca.
Stress analysis report on file at NVD of Borg Warner, 7500 Tyrone Ave., Van Nuys, CA
Design specifications certified by David J. Murphy (1) Prof. Eng. State Wash. Reg. No. 12542
Stress analysis report certified by Byron Leonard Jr. (1) Prof. Eng. State CA Reg. No. E123
(1) Signature not required. List name only.

We certify that the statements made in this report are correct.

Date December 20 19 76 Signed Nuclear Valve Div. of Borg Warner (Manufacturer) By [signature]

Certificate of Authorization No. N-1254 expires October 27, 1978

CERTIFICATE OF SHOP INSPECTION

I, the undersigned, holding a valid commission issued by the National Board of Boiler and Pressure Vessel Inspectors and/or the State of Province of California and employed by Dept. of Bldg. & Safety of City of Los Angeles have inspected the equipment described in this Data Report on December 20 19 76, and state that to the best of my knowledge and belief, the Manufacturer has constructed this equipment in accordance with the applicable Subsections of ASME Code, Section III.

By signing this certificate, neither the Inspector nor his employer makes any warranty, expressed or implied, concerning the equipment described in this Data Report. Furthermore, neither the Inspector nor his employer shall be liable in any manner for any personal injury or property damage or a loss of any kind arising from or connected with this inspection.

WBG BR < 15-16345A

Date December 20 19 76

[signature] (Inspector) Commissions California (National Board, State, Province and No.)

MAR 31 1982

BECHTEL QUALITY CONTROL
BY: [signature]

This form (F17) is obtainable from the ASME, 345 E. 47th St., New York, N.Y. 10017

PLAN No 2-1958

ENERGY NORTHWEST
People·Vision·Solutions

FORM NIS-2 OWNER'S REPORT FOR REPAIRS OR REPLACEMENTS
As Required By The Provisions Of The ASME Code Section XI

1. Owner: Energy Northwest
Address: Columbia Generating Station, North Power Plant Loop, Richland, Washington, 99352
2. Plant: Columbia Generating Station
Address: Columbia Generating Station, North Power Plant Loop, Richland, Washington, 99352

Date: 06/09/05
Sheet: 1 Of 1
Unit: Not Applicable

3. (a) Work Performed By: Energy Northwest
(b) Repair Organization P.O. No, Job No, etc.: Energy Northwest
(c) Type Code Symbol Stamp: Not Applicable
(d) Certificate Of Authorization No.: Not Applicable
(e) Expiration Date: Not Applicable
4. Identification Of System: Floor Drain Radioactive (FDR) System
5. (a) Applicable Construction Code: ASME Section III, Code Class 2, 1974 Edition with Winter 1975 Addenda, Code Case: None
(b) Applicable Edition Of ASME Section XI Utilized For Repairs Or Replacements: 1989 Edition with no Addenda, Code Case: None
6. Identification Of Components Repaired Or Replaced And Replacement Components

Name Of Component	Name Of Manufacturer	Manufacturer's Serial No	National Board No	Other I.D.	Year Built	Repaired, Replaced Or Replacement	ASME Code Stamped (Yes Or No) Code Class
PI(1)-ST-(IR-61)-4 (D-220-0.31.0-IR-61)	JCI	PI(1)-ST-(IR-61)-4 (D-220-0.31.0-IR-61)	N/A	N/A	1982	----------	Yes, Code Class 2

7. Description Of Work Performed: Replaced existing instrument air tubing to valve FDR-V-3. The replacement work was performed as follows:

1) Removed existing instrument air tubing.
2) Bent instrument air tubing to the required design requirements
3) Installed replacement instrument air tubing material such as union, male connector and tubing.

PLAN No 2-1958

ENERGY NORTHWEST
People·Vision·Solutions

FORM NIS-2 OWNER'S REPORT FOR REPAIRS OR REPLACEMENTS (Back)

8 Tests Conducted: Hydrostatic [ ] Pneumatic [ ] Nominal Operating Pressure [ ] None [X]
Test Pressure: Psig Test Temperature: °F
Component Design Pressure: Psig Temperature: °F

9. Remarks (Applicable Manufacturer's Data Reports to be attached): None

CERTIFICATE OF COMPLIANCE

We certify that the statements made in this Owner's Report are correct and this replacement conforms to the rules of the ASME Code, Section XI.
Type Code Symbol Stamp: Not Applicable
Certificate Of Authorization No.: Not Applicable
Expiration Date: Not Applicable

Prepared By Kuldip Singh - Program Lead Engineer (PLE) Signed By Kuldip Singh - Program Lead Engineer (PLE)

Date 6/13/05 Date 6/13/05

CERTIFICATE OF INSERVICE INSPECTION

I, the undersigned, holding a valid commission issued by the National Board of Boiler and Pressure Vessel Inspectors and the State of _____ and employed by _____ have inspected the components described in this Owner's Report during the period _____ to _____ and state to the best of my knowledge and belief, the Owner has performed examinations and taken corrective measures described in this Owner's Report in accordance with the requirements of the ASME Code, Section XI.
By signing this certificate neither the Inspector nor his employer makes any warranty, expressed or implied, concerning the examinations and corrective measures described in this Owner's Report. Furthermore, neither the Inspector nor his employer shall be liable in any manner for any personal injury or property damage or a loss of any kind arising from or connected with this inspection.

Not Required - Replacement 1" NPS And Smaller Commissions _____
Inspector's Signature National Board, State, and Endorsements

Date _____

PLAN No 2-1959

ENERGY NORTHWEST
People·Vision·Solutions

FORM NIS-2 OWNER'S REPORT FOR REPAIRS OR REPLACEMENTS
As Required By The Provisions Of The ASME Code Section XI

1. Owner: Energy Northwest
Address: Columbia Generating Station, North Power Plant Loop, Richland, Washington, 99352
2. Plant: Columbia Generating Station
Address: Columbia Generating Station, North Power Plant Loop, Richland, Washington, 99352

Date: 06/09/05
Sheet: 1 Of 1
Unit: Not Applicable

3. (a) Work Performed By: Energy Northwest
(b) Repair Organization P.O. No, Job No, etc.: Energy Northwest
(c) Type Code Symbol Stamp: Not Applicable
(d) Certificate Of Authorization No.: Not Applicable
(e) Expiration Date: Not Applicable
4. Identification Of System: Floor Drain Radioactive (FDR) System
5. (a) Applicable Construction Code: ASME Section III, Code Class 2, 1974 Edition with Winter 1975 Addenda, Code Case: None
(b) Applicable Edition Of ASME Section XI Utilized For Repairs Or Replacements: 1989 Edition with no Addenda, Code Case: None
6. Identification Of Components Repaired Or Replaced And Replacement Components

Name Of Component	Name Of Manufacturer	Manufacturer's Serial No	National Board No	Other I.D.	Year Built	Repaired, Replaced Or Replacement	ASME Code Stamped (Yes Or No) Code Class
PI(1)-ST-(IR-65)-4 (D-220-0.31.0-IR-65)	JCI	PI(1)-ST-(IR-65)-4 (D-220-0.31.0-IR-65)	N/A	N/A	1983	----------	Yes, Code Class 2

7. Description Of Work Performed: Replaced existing instrument air tubing to valve FDR-V-4. The replacement work was performed as follows:

1) Removed existing instrument air tubing.
2) Bent instrument air tubing to the required design requirements
3) Installed replacement instrument air tubing material such as union, male connector and tubing.

PLAN No 2-1959

ENERGY NORTHWEST
People·Vision·Solutions

FORM NIS-2 OWNER'S REPORT FOR REPAIRS OR REPLACEMENTS (Back)

8 Tests Conducted: Hydrostatic [ ] Pneumatic [ ] Nominal Operating Pressure [ ] None [X]
Test Pressure: Psig Test Temperature: °F
Component Design Pressure: Psig Temperature: °F

9. Remarks (Applicable Manufacturer's Data Reports to be attached): None

CERTIFICATE OF COMPLIANCE

We certify that the statements made in this Owner's Report are correct and this replacement conforms to the rules of the ASME Code, Section XI.
Type Code Symbol Stamp: Not Applicable
Certificate Of Authorization No.: Not Applicable
Expiration Date: Not Applicable

Prepared By Kuldip Singh - Program Lead Engineer (PLE) Signed By Kuldip Singh - Program Lead Engineer (PLE)

Date 6/13/05 Date 6/13/05

CERTIFICATE OF INSERVICE INSPECTION

I, the undersigned, holding a valid commission issued by the National Board of Boiler and Pressure Vessel Inspectors and the State of _____ and employed by _____ have inspected the components described in this Owner's Report during the period _____ to _____ and state to the best of my knowledge and belief, the Owner has performed examinations and taken corrective measures described in this Owner's Report in accordance with the requirements of the ASME Code, Section XI.
By signing this certificate neither the Inspector nor his employer makes any warranty, expressed or implied, concerning the examinations and corrective measures described in this Owner's Report. Furthermore, neither the Inspector nor his employer shall be liable in any manner for any personal injury or property damage or a loss of any kind arising from or connected with this inspection.

Not Required - Replacement 1" NPS And Smaller Commissions _____
Inspector's Signature National Board, State, and Endorsements

Date _____

PLAN No 2-1960

ENERGY NORTHWEST
People·Vision·Solutions

FORM NIS-2 OWNER'S REPORT FOR REPAIRS OR REPLACEMENTS
As Required By The Provisions Of The ASME Code Section XI

1. Owner: Energy Northwest
Address: Columbia Generating Station, North Power Plant Loop, Richland, Washington, 99352
2. Plant: Columbia Generating Station
Address: Columbia Generating Station, North Power Plant Loop, Richland, Washington, 99352

Date: 06/10/05
Sheet: 1 Of 1
Unit: Not Applicable

3. (a) Work Performed By: Energy Northwest
(b) Repair Organization P.O. No, Job No, etc.: Energy Northwest
(c) Type Code Symbol Stamp: Not Applicable
(d) Certificate Of Authorization No.: Not Applicable
(e) Expiration Date: Not Applicable
4. Identification Of System: Main Steam (MS) System
5. (a) Applicable Construction Code: ASME Section III, Code Class 1, 1971 Edition with Winter 1971 Addenda, Code Case: None
(b) Applicable Edition Of ASME Section XI Utilized For Repairs Or Replacements: 1989 Edition with no Addenda, Code Case: None
6. Identification Of Components Repaired Or Replaced And Replacement Components

Name Of Component	Name Of Manufacturer	Manufacturer's Serial No	National Board No	Other I.D.	Year Built	Repaired, Replaced Or Replacement	ASME Code Stamped (Yes Or No) Code Class
MS-V-22B	Rockwelll	JT-37	69	N/A	1973	----------	Yes, Code Class 1
Pilot disc	Rockwell	218198-72	N/A	N/A	1992	Replacement	Yes, Code Class 1
Main disc	Rockwell	80496-1	N/A	N/A	2004	Replacement	Yes, Code Class 1

7. Description Of Work Performed: Assembled pilot disc (stem disc) main disc (piston disc) for use for valve MS-V-22B, Serial No JT-37. The parts were assembled as follows:

1) Assembled pilot disc (stem disc) Serial No 218198-72.
2) Assembled main disc (piston disc) Serial No 80496-1.

NOTES -

1) The ASME Section XI plans applicable to valve MS-V-22B are as follows:
   ASME Section XI Plan No 2-1960 - Assemble pilot disc (stem disc) and main disc (piston disc) for valve MS-V-22B.
   ASME Section XI Plan No 2-1961 - Work for bore ID for valve MS-V-22B.
   ASME Section XI Plan No 2-1962 - Replace parts for valve MS-V-22B.
2) Rockwell International/Edward Valves, Inc parts are now being manufactured by Flowserve.

PLAN No 2-1960

ENERGY NORTHWEST
People·Vision·Solutions

FORM NIS-2 OWNER'S REPORT FOR REPAIRS OR REPLACEMENTS (Back)

8 Tests Conducted: Hydrostatic ☐ Pneumatic ☐ Nominal Operating Pressure ☐ Other ☒

Test Pressure: Psig — Test Temperature: °F

Component Design Pressure: Psig — Temperature: °F

9. Remarks: 1) See attached N-2 Code Data Reports for the following replacement parts:

Part Description	Serial No
Pilot disc (stem disc)	218198-72
Main disc (piston disc)	80496-1

2) * See ASME Section XI Plan No 2-1962 for the pressure test.

CERTIFICATE OF COMPLIANCE

We certify that the statements made in this Owner's Report are correct and this replacement *conforms to the rules of the ASME Code, Section XI.*

Type Code Symbol Stamp: Not Applicable

Certificate Of Authorization No.: Not Applicable

Expiration Date: Not Applicable

Prepared By Kuldip Singh - Program Lead Engineer (PLE) *Signed By* Kuldip Singh - Program Lead Engineer (PLE)

Date 6/11/05 *Date* 6/11/05

CERTIFICATE OF INSERVICE INSPECTION

I, the undersigned, holding a valid commission issued by the National Board of Boiler and Pressure Vessel Inspectors and the State of Washington *and employed by* Hartford Steam Boiler Of Connecticut of Hartford, Connecticut *have inspected the components described in this Owner's Report during the period* 4/21/2005 *to* 6/15/2005 *and state to the best of my knowledge and belief, the Owner has performed examinations and taken corrective measures described in this Owner's Report in accordance with the requirements of the ASME Code, Section XI.*

By signing this certificate neither the Inspector nor his employer makes any warranty, expressed or implied, concerning the examinations and corrective measures described in this Owner's Report. Furthermore, neither the Inspector nor his employer shall be liable in any manner for any personal injury or property damage or a loss of any kind arising from or connected with this inspection.

Inspector's Signature — *Commissions* 10655 W A, B, N, I — National Board, State, and Endorsements

Date 6/15/2005

PLAN No. 2-1960
Philip Sayles
6/6/05

FORM N-2 N OR NPT CERTIFICATE HOLDERS' DATA REPORT FOR IDENTICAL NUCLEAR PARTS AND APPURTENANCES*

As Required by the Provisions of the ASME Code, Section III, Division 1
Not To Exceed One Day's Production

1. Manufactured and certified by Edward Valves, Inc., 1900 S. Saunders St. Raleigh, NC 27603 (name and address of certificate holder)
2. Manufactured for Washington Public Power Supply System, P.O. Box 968, Richland, WA 99352 (name and address of purchaser)
3. Location of installation Washington Public Power Supply System, N. Power Plant Loop, Richland, WA 99352 (name and address)
4. Type PD 432885 R/U (drawing no.) SA105 (mat'l. spec. no.) N/A (tensile strength) N/A (CRN) 1992 (year built)
5. ASME Code, Section III: 1971 (edition) Winter 1971 (addenda) 1 (class) N/A (Code Case no.)
6. Fabricated in accordance with Const. Spec. (Div. 2 only) N/A (No.) Revision N/A Date N/A
7. Remarks: Stem/Stem-Disk Assembly for 26" 1612 JMMNTY MSIV.

(Ref. S.O. E36-24470)

8. Nom. thickness (in.) N/A Min. design thickness (in.) Per #4 Dia. ID (ft. & in.) N/A Length overall (ft. & in.) N/A
9. When applicable, Certificate Holders' data reports are attached for each item of this report:

Part or Appurtenance Serial Number	National Board No. In Numerical Order	Part or Appurtenance Serial Number	National Board Number In Numerical Order
(1) 218198-72	N/A	(26)	
(2)		(27)	
(3)		(28)	
(4)		(29)	
(5)		(30)	
(6)		(31)	
(7)		(32)	
(8)		(33)	
(9)		(34)	
(10)		(35)	
(11)		(36)	
(12)		(37)	
(13)		(38)	
(14)		(39)	
(15)		(40)	
(16)		(41)	
(17)		(42)	
(18)		(43)	
(19)		(44)	
(20)		(45)	
(21)		(46)	
(22)		(47)	
(23)		(48)	
(24)		(49)	
(25)		(50)	

10. Design pressure 1250 psi Temp. 575 °F. Hydro. test pressure N/A (when applicable) at temp. °F.

*Supplemental information in the form of lists, sketches, or drawings may be used provided (1) size is 8½ X 11, (2) information in items 2 and 3 on this data report is included on each sheet, (3) each sheet is numbered and the number of sheets is recorded at the top of this form.

(8/85)-1 This form (E00040) may be obtained from the Order Dept., ASME, 345 E. 47th St., New York, N.Y. 10017.

0250030398

F 6-4 2

FORM N-2 (back)

P. 2 of 2

Mfr. Serial No. 219199-72

CERTIFICATE OF DESIGN

Design specifications certified by Boyd Brooks (when applicable) P. E. state CA Reg. no 13655

Design report* certified by S. L. Adams, III (when applicable) P. E. state NC Reg. no. 4187

CERTIFICATE OF SHOP COMPLIANCE

We certify that the statements made in this report are correct and that this (these) Parts conform to the rules of construction of the ASME Code, Section III.

NPT Certificate of Authorization no. N1563 Expires 11/26/94

Date 6/2/92 Name Edward Valves, Inc. (NPT Certificate Holder) Signed W. A. Rain (authorized representative)

CERTIFICATE OF SHOP INSPECTION

I, the undersigned, holding a valid commission issued by the National Board of Boiler and Pressure Vessel Inspectors and the state or province of North Carolina and employed by The Hartford Steam Boiler Inspection & Insurance Company of Hartford, CT have inspected these items described in this data report on 6-3-92, and state that to the best of my knowledge and belief, the Certificate Holder has fabricated these parts or appurtenances in accordance with the ASME Code, Section III. Each part listed has been authorized for stamping on the date shown above.

By signing this certificate, neither the inspector nor his employer makes any warranty, expressed or implied, concerning the equipment described in this data report. Furthermore, neither the inspector nor his employer shall be liable in any manner for any personal injury or property damage or loss of any kind arising from or connected with this inspection.

Date 6-3-92 Signed (Authorized Inspector) Commissions NC 1083 (Nat'l. Bd. (incl. endorsements) state or prov. and no.)

6-9-92

02500030397

3

PLAN No. 2-1960

Philip Smith 6/6/05

FORM N-2 CERTIFICATE HOLDERS' DATA REPORT FOR IDENTICAL NUCLEAR PARTS AND APPURTENANCES*

As Required by the Provisions of the ASME Code, Section III
Not to Exceed One Day's Production

1. Manufactured and certified by Flowserve Corporation, 1900 S. Saunders St., Raleigh, NC 27603 (name and address of NPT Certificate Holder)
2. Manufactured for Energy Northwest, P. O. Box 968, Richland, WA 99352 (name and address of purchaser)
3. Location of installation Energy Northwest, Columbia Generating Station, N. Powerplant Loop, Richland, WA (name and address)
4. Type PD-422885, R/E* (drawing no.) SA105 (mat'l. spec. no.) N/A (tensile strength) N/A (CRN) 2004 (year built)
5. ASME Code, Section III, Division 1: 1971 (edition) Winter, 1971 (addenda date) 1 (class) N/A (Code Case no.)
6. Fabricated in accordance with Const. Spec. (Div. 2 only) N/A (no.) Revision N/A Date N/A
7. Remarks: Disk-Piston assembly for 26" 1612JMMNTY Valve
   Disk material meets ASME Section II, 1974 Edition
   * Sheet 3B. Sheet 1, R/U S. O. 29257
8. Nom. thickness (in.) N/A Min. design thickness (in.) Per #4 Dia. ID (ft & in.) N/A Length overall (ft & in.) N/A
9. When applicable, Certificate Holders' Data Reports are attached for each item of this report:

Part or Appurtenance Serial Number	National Board No. In Numerical Order	Part or Appurtenance Serial Number	National Board No. In Numerical Order
(1) 80496-1	N/A	(26)	
(2)		(27)	
(3)		(28)	
(4)		(29)	
(5)		(30)	
(6)		(31)	
(7)		(32)	
(8)		(33)	
(9)		(34)	
(10)		(35)	
(11)		(36)	
(12)		(37)	
(13)		(38)	
(14)		(39)	
(15)		(40)	
(16)		(41)	
(17)		(42)	
(18)		(43)	
(19)		(44)	
(20)		(45)	
(21)		(46)	
(22)		(47)	
(23)		(48)	
(24)		(49)	
(25)		(50)	

10. Design pressure 1250 psi. Temp. 575 °F. Hydro. test pressure N/A (when applicable) at temp. °F

* Supplemental information in the form of lists, sketches, or drawings may be used provided (1) size is 8½ x 11, (2) information in items 2 and 3 on this Data Report is included on each sheet, (3) each sheet is numbered and the number of sheets is recorded at the top of this form.

FORM N-2 (Back — Pg 2 of 2)

Certificate Holder's Serial Nos. 80496-1 through ---

CERTIFICATION OF DESIGN

Design specifications certified by Boyd Brooks (when applicable) P.E. State CA Reg. no. 13655

Design report* certified by S. L. Adams (when applicable) P.E. State NC Reg. no. 4187

CERTIFICATE OF COMPLIANCE

We certify that the statements made in this report are correct and that this (these) Part(s) conforms to the rules of construction of the ASME Code, Section III, Division 1.

NPT Certificate of Authorization No. N-1563 Expires November 26, 2006

Date 8/30/04 Name Flowserve Corporation (NPT Certificate Holder) Signed [signature] (authorized representative)

CERTIFICATE OF INSPECTION

I, the undersigned, holding a valid commission issued by the National Board of Boiler and Pressure Vessel Inspectors and the State or Province of NC and employed by HSB CT of Hartford, CT have inspected these items described in this Data Report on 8-30-04, and state that to the best of my knowledge and belief, the Certificate Holder has fabricated these parts or appurtenances in accordance with the ASME Code, Section III, Division 1. Each part listed has been authorized for stamping on the date shown above.

By signing this certificate, neither the inspector nor his employer makes any warranty, expressed or implied, concerning the equipment described in this Data Report. Furthermore, neither the inspector nor his employer shall be liable in any manner for any personal injury or property damage or loss of any kind arising from or connected with this inspection.

Date 8-30-04 Signed [signature] (Authorized Nuclear Inspector) Commissions NC1421 (Nat'l. Bd. (incl. endorsements) and state or prov. and no.)

PLAN No 2-1962

ENERGY NORTHWEST
People·Vision·Solutions

FORM NIS-2 OWNER'S REPORT FOR REPAIRS OR REPLACEMENTS
As Required By The Provisions Of The ASME Code Section XI

1. Owner: Energy Northwest
Address: Columbia Generating Station, North Power Plant Loop, Richland, Washington, 99352
2. Plant: Columbia Generating Station
Address: Columbia Generating Station, North Power Plant Loop, Richland, Washington, 99352

Date: 06/10/05
Sheet: 1 Of 1
Unit: Not Applicable

3. (a) Work Performed By: Energy Northwest
(b) Repair Organization P.O. No, Job No, etc.: Energy Northwest
(c) Type Code Symbol Stamp: Not Applicable
(d) Certificate Of Authorization No.: Not Applicable
(e) Expiration Date: Not Applicable
4. Identification Of System: Main Steam (MS) System
5. (a) Applicable Construction Code: ASME Section III, Code Class 1, 1971 Edition with Winter 1971 Addenda, Code Case: None
(b) Applicable Edition Of ASME Section XI Utilized For Repairs Or Replacements: 1989 Edition with no Addenda, Code Case: None
6. Identification Of Components Repaired Or Replaced And Replacement Components

Name Of Component	Name Of Manufacturer	Manufacturer's Serial No	National Board No	Other I.D.	Year Built	Repaired, Replaced Or Replacement	ASME Code Stamped (Yes Or No) Code Class
MS-V-22B	Rockwell	JT-37	69	N/A	1973	----------	Yes, Code Class 1
Pilot disc	Rockwell	6033641-158	N/A	N/A	1989	Replaced	Yes, Code Class 1
Pilot disc	Rockwell	218198-72	N/A	N/A	1992	Replacement	Yes, Code Class 1
Main disc	Rockwell	215585-2	N/A	N/A	1990	Replaced	Yes, Code Class 1
Main disc	Rockwell	80496-1	N/A	N/A	2004	Replacement	Yes, Code Class 1

7. Description Of Work Performed: Replaced existing parts for valve MS-V-22B, Serial No JT-37. The replacement work was performed as follows

1) Removed existing pilot disc (stem disc) Serial No 6033641-158 from the valve.
2) Removed existing main disc (piston disc) Serial No 215585-2 from the valve.
3) Performed VT-1 visual examination on replacement studs for the valve body to bonnet joint for ISI (PSI). VT-1 visual examination results acceptable.
4) Performed VT-1 visual examination on replacement nuts for the valve body to bonnet joint for ISI (PSI). VT-1 visual examination results acceptable.
5) Installed replacement pilot disc (stem disc) Serial No 218198-72 in the valve.
6) Installed replacement main disc (piston disc) Serial No 80496-1 in the valve.
7) Installed twenty four (24) VT-1 visually examined replacement studs for the valve body to bonnet joint.
8) Installed twenty four (24) VT-1 visually examined replacement nuts for the valve body to bonnet joint.
9) Performed VT-2 visual examination during pressure test to confirm pressure boundary integrity of the valve body to bonnet bolted joint. No evidence of leakage during the pressure test.

NOTES -

1) The ASME Section XI plans applicable to valve MS-V-22B are as follows:
   ASME Section XI Plan No 2-1960 - Assemble pilot disc (stem disc) and main disc (piston disc) for valve MS-V-22B.
   ASME Section XI Plan No 2-1961 - Work for bore ID for valve MS-V-22B.
   ASME Section XI Plan No 2-1962 - Replace parts for valve MS-V-22B.
2) Rockwell International/Edward Valves, Inc parts are now being manufactured by Flowserve.

PLAN No 2-1962

ENERGY NORTHWEST
People·Vision·Solutions

FORM NIS-2 OWNER'S REPORT FOR REPAIRS OR REPLACEMENTS (Back)

8 Tests Conducted: Hydrostatic ☐ *Pneumatic* ☐ *Nominal Operating Pressure* ☐ *Other* ☒

Test Pressure: 1020 Psig *Test Temperature:* 170° F

Component Design Pressure: 1250 Psig *Temperature:* 575° F

9. Remarks: 1) See attached N-2 Code Data Reports for the following replacement parts:

Part Description	Serial No
Pilot disc (stem disc)	218198-72
Main disc (piston disc)	80496-1

2) * The test pressure and the test temperature on the valve body to bonnet joint was recorded during ASME Section XI pressure test which was performed in accordance with PPM No OSP-RPV-R801 "Reactor Pressure Vessel Leakage Test".

CERTIFICATE OF COMPLIANCE

We certify that the statements made in this Owner's Report are correct and this replacement *conforms to the rules of the ASME Code, Section XI.*

Type Code Symbol Stamp: Not Applicable

Certificate Of Authorization No.: Not Applicable

Expiration Date: Not Applicable

Prepared By Kuldip Singh - Program Lead Engineer (PLE) *Signed By* Kuldip Singh - Program Lead Engineer (PLE)

Date 6/11/05 *Date* 6/11/05

CERTIFICATE OF INSERVICE INSPECTION

I, the undersigned, holding a valid commission issued by the National Board of Boiler and Pressure Vessel Inspectors and the State of Washington *and employed by* Hartford Steam Boiler Of Connecticut of Hartford, Connecticut *have inspected the components described in this Owner's Report during the period* 4/21/2005 *to* 6/15/2005 *and state to the best of my knowledge and belief, the Owner has performed examinations and taken corrective measures described in this Owner's Report in accordance with the requirements of the ASME Code, Section XI.*

By signing this certificate neither the Inspector nor his employer makes any warranty, expressed or implied, concerning the examinations and corrective measures described in this Owner's Report. Furthermore, neither the Inspector nor his employer shall be liable in any manner for any personal injury or property damage or a loss of any kind arising from or connected with this inspection.

Inspector's Signature *Commissions* 10655W A,B,N,I National Board, State, and Endorsements

Date 6/15/2005

PLAN No. 2-1962
Philip Sayles
6/6/05

FORM N-2 N OR NPT CERTIFICATE HOLDERS' DATA REPORT FOR IDENTICAL NUCLEAR PARTS AND APPURTENANCES*

As Required by the Provisions of the ASME Code, Section III, Division 1
Not To Exceed One Day's Production

1. Manufactured and certified by Edward Valves, Inc., 1900 S. Saunders St. Raleigh, NC 27603 (name and address of certificate holder)
2. Manufactured for Washington Public Power Supply System, P.O. Box 968, Richland, WA 99352 (name and address of purchaser)
3. Location of installation Washington Public Power Supply System, N. Power Plant Loop, Richland, WA 99352 (name and address)
4. Type PD 422885 R/U (drawing no.) SA105 (mat'l. spec. no.) N/A (tensile strength) N/A (CRN) 1992 (year built)
5. ASME Code, Section III: 1971 (edition) Winter 1971 (addenda) 1 (class) N/A (Code Case no.)
6. Fabricated in accordance with Const. Spec. (Div. 2 only) N/A (No.) Revision N/A Date N/A
7. Remarks: Stem/Stem-Disk Assembly for 26" 1612 JMMNTY MSIV.

(Ref. S.O. E36-2470)

8. Nom. thickness (in.) N/A Min. design thickness (in.) Per #4 Dia. ID (ft. & in.) N/A Length overall (ft. & in.) N/A
9. When applicable, Certificate Holders' data reports are attached for each item of this report:

Part or Appurtenance Serial Number	National Board No. In Numerical Order	Part or Appurtenance Serial Number	National Board Number In Numerical Order
(1) 218198-72	N/A	(26)	
(2)		(27)	
(3)		(28)	
(4)		(29)	
(5)		(30)	
(6)		(31)	
(7)		(32)	
(8)		(33)	
(9)		(34)	
(10)		(35)	
(11)		(36)	
(12)		(37)	
(13)		(38)	
(14)		(39)	
(15)		(40)	
(16)		(41)	
(17)		(42)	
(18)		(43)	
(19)		(44)	
(20)		(45)	
(21)		(46)	
(22)		(47)	
(23)		(48)	
(24)		(49)	
(25)		(50)	

10. Design pressure 1250 psi Temp. 575 °F. Hydro. test pressure N/A (when applicable) at temp. °F.

*Supplemental information in the form of lists, sketches, or drawings may be used provided (1) size is 8½ X 11, (2) information in items 2 and 3 on this data report is included on each sheet, (3) each sheet is numbered and the number of sheets is recorded at the top of this form.

(8/85)-1 This form (E00040) may be obtained from the Order Dept., ASME, 345 E. 47th St., New York, N.Y. 10017.

0250030398

F 6-7 2

FORM N-2 (back)

P. 2 of 2

Mfr. Serial No. 219198-72

CERTIFICATE OF DESIGN

Design specifications certified by Boyd Brooks (when applicable) P. E. state CA Reg. no 13655

Design report* certified by S. L. Adams, III (when applicable) P. E. state NC Reg. no. 4187

CERTIFICATE OF SHOP COMPLIANCE

We certify that the statements made in this report are correct and that this (these) Parts conform to the rules of construction of the ASME Code, Section III.

NPT Certificate of Authorization no. N1563 Expires 11/26/94

Date 6/2/92 Name Edward Valves, Inc. (NPT Certificate Holder) Signed W. A. Rain (authorized representative)

CERTIFICATE OF SHOP INSPECTION

I, the undersigned, holding a valid commission issued by the National Board of Boiler and Pressure Vessel Inspectors and the state or province of North Carolina and employed by The Hartford Steam Boiler Inspection & Insurance Company of Hartford, CT have inspected these items described in this data report on 6-3-92, and state that to the best of my knowledge and belief, the Certificate Holder has fabricated these parts or appurtenances in accordance with the ASME Code, Section III. Each part listed has been authorized for stamping on the date shown above.

By signing this certificate, neither the inspector nor his employer makes any warranty, expressed or implied, concerning the equipment described in this data report. Furthermore, neither the inspector nor his employer shall be liable in any manner for any personal injury or property damage or loss of any kind arising from or connected with this inspection.

Date 6-3-92 Signed [signature] (Authorized Inspector) Commissions NC 1083 (Nat'l Bd. (incl. endorsements) state or prov. and no.)

6-3-92

02500303097

3

PLAN No. 2-1962
Philip Smith
6/6/05

FORM N-2 CERTIFICATE HOLDERS' DATA REPORT FOR IDENTICAL NUCLEAR PARTS AND APPURTENANCES*

As Required by the Provisions of the ASME Code, Section III
Not to Exceed One Day's Production

1. Manufactured and certified by Flowserve Corporation, 1900 S. Saunders St., Raleigh, NC 27603 (name and address of NPT Certificate Holder)
2. Manufactured for Energy Northwest, P. O. Box 968, Richland, WA 99352 (name and address of purchaser)
3. Location of installation Energy Northwest, Columbia Generating Station, N. Powerplant Loop, Richland, WA (name and address)
4. Type PD-422885, R/E* (drawing no.) SA105 (mat'l. spec. no.) N/A (tensile strength) N/A (CRN) 2004 (year built)
5. ASME Code, Section III, Division 1: 1971 (edition) Winter, 1971 (addenda date) 1 (class) N/A (Code Case no.)
6. Fabricated in accordance with Const. Spec. (Div. 2 only) N/A (no.) Revision N/A Date N/A
7. Remarks: Disk-Piston assembly for 26" 1612JMMNTY Valve
Disk material meets ASME Section II, 1974 Edition
* Sheet 3B. Sheet 1, R/U S. O. 29257
8. Nom. thickness (in.) N/A Min. design thickness (in.) Per #4 Dia. ID (ft & in.) N/A Length overall (ft & in.) N/A
9. When applicable, Certificate Holders' Data Reports are attached for each item of this report:

Part or Appurtenance Serial Number	National Board No. in Numerical Order	Part or Appurtenance Serial Number	National Board No. in Numerical Order
(1) 80496-1	N/A	(26)	
(2)		(27)	
(3)		(28)	
(4)		(29)	
(5)		(30)	
(6)		(31)	
(7)		(32)	
(8)		(33)	
(9)		(34)	
(10)		(35)	
(11)		(36)	
(12)		(37)	
(13)		(38)	
(14)		(39)	
(15)		(40)	
(16)		(41)	
(17)		(42)	
(18)		(43)	
(19)		(44)	
(20)		(45)	
(21)		(46)	
(22)		(47)	
(23)		(48)	
(24)		(49)	
(25)		(50)	

10. Design pressure 1250 psi. Temp. 575 °F. Hydro. test pressure N/A (when applicable) at temp. °F

* Supplemental information in the form of lists, sketches, or drawings may be used provided (1) size is 8½ x 11, (2) information in items 2 and 3 on this Data Report is included on each sheet, (3) each sheet is numbered and the number of sheets is recorded at the top of this form.

FORM N-2 (Back — Pg 2 of 2)

Certificate Holder's Serial Nos. 80496-1 through ---

CERTIFICATION OF DESIGN

Design specifications certified by Boyd Brooks (when applicable) P.E. State CA Reg. no. 13655

Design report* certified by S. L. Adams (when applicable) P.E. State NC Reg. no. 4187

CERTIFICATE OF COMPLIANCE

We certify that the statements made in this report are correct and that this (these) Part(s) conforms to the rules of construction of the ASME Code, Section III, Division 1.

NPT Certificate of Authorization No. N-1563 Expires November 26, 2006

Date 8/30/04 Name Flowserve Corporation (NPT Certificate Holder) Signed [signature] (authorized representative)

CERTIFICATE OF INSPECTION

I, the undersigned, holding a valid commission issued by the National Board of Boiler and Pressure Vessel Inspectors and the State or Province of NC and employed by HSB CT of Hartford, CT have inspected these items described in this Data Report on 8-30-04, and state that to the best of my knowledge and belief, the Certificate Holder has fabricated these parts or appurtenances in accordance with the ASME Code, Section III, Division 1. Each part listed has been authorized for stamping on the date shown above.

By signing this certificate, neither the inspector nor his employer makes any warranty, expressed or implied, concerning the equipment described in this Data Report. Furthermore, neither the inspector nor his employer shall be liable in any manner for any personal injury or property damage or loss of any kind arising from or connected with this inspection.

Date 8-30-04 Signed [signature] (Authorized Nuclear Inspector) Commissions NC1421 (Nat'l. Bd. (incl. endorsements) and state or prov. and no.)

4

ENERGY NORTHWEST
People·Vision·Solutions

FORM NIS-2 OWNER'S REPORT FOR REPAIRS OR REPLACEMENTS
As Required By The Provisions Of The ASME Code Section XI

1. Owner: Energy Northwest
Address: Columbia Generating Station, North Power Plant Loop, Richland, Washington, 99352
2. Plant: Columbia Generating Station
Address: Columbia Generating Station, North Power Plant Loop, Richland, Washington, 99352

Date: 06/10/05
Sheet: 1 Of 1
Unit: Not Applicable

3. (a) Work Performed By: Energy Northwest
(b) Repair Organization P.O. No, Job No, etc.: Energy Northwest
(c) Type Code Symbol Stamp: Not Applicable
(d) Certificate Of Authorization No.: Not Applicable
(e) Expiration Date: Not Applicable
4. Identification Of System: Main Steam (MS) System
5. (a) Applicable Construction Code: ASME Section III, Code Class 1, 1971 Edition with Winter 1971 Addenda, Code Case: None
(b) Applicable Edition Of ASME Section XI Utilized For Repairs Or Replacements: 1989 Edition with no Addenda, Code Case: None
6. Identification Of Components Repaired Or Replaced And Replacement Components

Name Of Component	Name Of Manufacturer	Manufacturer's Serial No	National Board No	Other I.D.	Year Built	Repaired, Replaced Or Replacement	ASME Code Stamped (Yes Or No) Code Class
MS-V-22C	Rockwell	JT-54	70	N/A	1973	----------	Yes, Code Class 1
Pilot disc	Rockwell	215585-36	N/A	N/A	1990	Replacement	Yes, Code Class 1
Main disc	Rockwell	81292-5	N/A	N/A	2004	Replacement	Yes, Code Class 1

7. Description Of Work Performed: Assembled pilot disc (stem disc) main disc (piston disc) for use for valve MS-V-22C, Serial No JT-54. The parts were assembled as follows:
1) Assembled pilot disc (stem disc) Serial No 215585-36.
2) Assembled main disc (piston disc) Serial No 81292-5.

NOTES -
1) The ASME Section XI plans applicable to valve MS-V-22C are as follows:
ASME Section XI Plan No 2-1963 - Assemble pilot disc (stem disc) and main disc (piston disc) for valve MS-V-22C.
ASME Section XI Plan No 2-1964 - Work for bore ID for valve MS-V-22C.
ASME Section XI Plan No 2-1965 - Replace parts for valve MS-V-22C.
2) Rockwell International/Edward Valves, Inc parts are now being manufactured by Flowserve.

PLAN No 2-1963

ENERGY NORTHWEST
People·Vision·Solutions

FORM NIS-2 OWNER'S REPORT FOR REPAIRS OR REPLACEMENTS (Back)

8 Tests Conducted: Hydrostatic [ ] Pneumatic [ ] Nominal Operating Pressure [ ] Other [•]
Test Pressure: Psig — Test Temperature: °F
Component Design Pressure: Psig — Temperature: °F

9. Remarks: 1) See attached N-2 Code Data Reports for the following replacement parts:

Part Description	Serial No
Pilot disc (stem disc)	215585-36
Main disc (piston disc)	81292-5

2) * See ASME Section XI Plan No 2-1965 for the pressure test.

CERTIFICATE OF COMPLIANCE

We certify that the statements made in this Owner's Report are correct and this replacement conforms to the rules of the ASME Code, Section XI.
Type Code Symbol Stamp: Not Applicable
Certificate Of Authorization No.: Not Applicable
Expiration Date: Not Applicable

Prepared By Kuldip Singh — Kuldip Singh - Program Lead Engineer (PLE)
Date 6/11/05

Signed By Kuldip Singh — Kuldip Singh - Program Lead Engineer (PLE)
Date 6/11/05

CERTIFICATE OF INSERVICE INSPECTION

I, the undersigned, holding a valid commission issued by the National Board of Boiler and Pressure Vessel Inspectors and the State of Washington and employed by Hartford Steam Boiler Of Connecticut of Hartford, Connecticut have inspected the components described in this Owner's Report during the period 4/21/2005 to 6/15/2005 and state to the best of my knowledge and belief, the Owner has performed examinations and taken corrective measures described in this Owner's Report in accordance with the requirements of the ASME Code, Section XI.
By signing this certificate neither the Inspector nor his employer makes any warranty, expressed or implied, concerning the examinations and corrective measures described in this Owner's Report. Furthermore, neither the Inspector nor his employer shall be liable in any manner for any personal injury or property damage or a loss of any kind arising from or connected with this inspection.

Inspector's Signature — Commissions 10655(a) A, B, H, T
National Board, State, and Endorsements

Date 6/15/2005

PLAN No. 2-1963

6/6/05

FORM N-2 CERTIFICATE HOLDERS' DATA REPORT FOR IDENTICAL NUCLEAR PARTS AND APPURTENANCES*

As Required by the Provisions of the ASME Code, Section III

Not To Exceed One Day's Production

Pg. 1 of 1

1. Manufactured and certified by Edward Valves, Inc., 1900 S. Saunders St., Raleigh, NC 27603 (name and address of NPT Certificate Holder)
2. Manufactured for Washington Public Power Supply System, Richland, Washington 99352 (name and address of purchaser)
3. Location of installation Hanford II, Richland, Washington 99352 (name and address)
4. Type PD422885 R/T (drawing no.) SA105 (mat'l. spec. no.) N/A (tensile strength) N/A (CRN) 1990 (year built)
5. ASME Code, Section III: 1971 (edition) Winter 1971 (addenda date) 1 (class) N/A (Code Case no.)
6. Fabricated in accordance with Const. Spec. (Div. 2 only) N/A (no.) Revision N/A Date N/A
7. Remarks: Three (3) stem disk/stem assemblies for size 26 figure 1612 JMMNTY flite-flow balanced stop valve (Ref. S.O. E36-14487)
8. Nom. thickness (in.) N/A Min. design thickness (in.) Per #4 Dia. ID (ft & in.) N/A Length overall (ft & in.) N/A
9. When applicable, Certificate Holders' Data Reports are attached for each item of this report:

Part or Appurtenance Serial Number	National Board No. in Numerical Order	Part or Appurtenance Serial Number	National Board Number in Numerical Order
(1) 215585-35		(26)	
(2) 215585-36		(27)	
(3) 215585-37		(28)	
(4)		(29)	
(5)		(30)	
(6)		(31)	
(7) S/N 215585-36		(32)	
(8)		(33)	
(9)		(34)	
(10)		(35)	
(11)		(36)	
(12)		(37)	
(13)		(38)	
(14)		(39)	
(15)		(40)	
(16)		(41)	
(17)		(42)	
(18)		(43)	
(19)		(44)	
(20)		(45)	
(21)		(46)	
(22)		(47)	
(23)		(48)	
(24)		(49)	
(25)		(50)	

10. Design pressure 1250 psi. Temp. 575 °F. Hydro. test pressure N/A (when applicable) at temp. °F

*Supplemental information in the form of lists, sketches, or drawings may be used provided (1) size is 8½ × 11, (2) information in items 2 and 3 on this Data Report is included on each sheet, (3) each sheet is numbered and the number of sheets is recorded at the top of this form.

(12/88) This form (E00040) may be obtained from the Order Dept., ASME, 22 Law Drive, Box 2300, Fairfield, NJ 07007-2300.

2

FOR INFORMATION ONLY

2 4 0 9 0 0 3 5

FORM N-2 (back)

Mfr. Serial No. 215585-353637

CERTIFICATION OF DESIGN

Design specifications certified by Boyd Brooks (when applicable) P.E. State CA Reg. no. 13655

Design report* certified by S.L. Adams III (when applicable) P.E. State NC Reg. no. 4487

CERTIFICATE OF SHOP COMPLIANCE

We certify that the statements made in this report are correct and that this (these) Parts conforms to the rules of construction of the ASME Code, Section III.

NPT Certificate of Authorization No. N-1563 Expires 11/26/91

Date 9/18/90 Name Edward Valves, Inc. (NPT Certificate Holder) Signed (authorized representative)

CERTIFICATE OF SHOP INSPECTION

I, the undersigned, holding a valid commission issued by the National Board of Boiler and Pressure Vessel Inspectors and the State or Province of North Carolina and employed by The Hartford Steam Boiler Inspection & Insurance Company of Hartford, CT have inspected these items described in this Data Report on 9-18-90, and state that to the best of my knowledge and belief, the Certificate Holder has fabricated these parts or appurtenances in accordance with the ASME Code, Section III. Each part listed has been authorized for stamping on the date shown above.

By signing this certificate, neither the inspector nor his employer makes any warranty, expressed or implied, concerning the equipment described in this Data Report. Furthermore, neither the inspector nor his employer shall be liable in any manner for any personal injury or property damage or loss of any kind arising from or connected with this inspection.

Date 9-18-90 Signed (Authorized Inspector) Commissions NC1083 (Nat'l. Bd. incl. endorsements, state or prov. and no.)

VERIFIED & ACCEPTED REC. INSPECTOR
LEVEL II DATE 11-8 90

3

FOR INFORMATION ONLY

PLAN NO. 2-1963
[illegible]
6/6/05

FORM N-2 CERTIFICATE HOLDERS' DATA REPORT FOR IDENTICAL NUCLEAR PARTS AND APPURTENANCES*

As Required by the Provisions of the ASME Code, Section III
Not to Exceed One Day's Production

1. Manufactured and certified by Flowserve Corporation, 1900 S. Saunders St., Raleigh, NC 27603
(name and address of NPT Certificate Holder)

2. Manufactured for Energy Northwest, P. O. Box 968, Richland, WA 99352
(name and address of purchaser)

3. Location of installation Energy Northwest, Columbia Generating Station, N. Powerplant Loop, Richland, WA
(name and address)

4. Type PD-422885, R/E* (drawing no.) SA105 (mat'l. spec. no.) N/A (tensile strength) N/A (CRN) 2004 (year built)

5. ASME Code, Section III, Division 1: 1971 (edition) Winter, 1971 (addenda date) 1 (class) N/A (Code Case no.)

6. Fabricated in accordance with Const. Spec. (Div. 2 only) N/A (no.) Revision N/A Date N/A

7. Remarks: Disk-Piston assembly for 26" 1612JMMNTY Valve
Disk material meets ASME Section II, 1974 Edition
* Sheet 3B. Sheet 1, R/U S. O. 29257

8. Nom. thickness (in.) N/A Min. design thickness (in.) Per #4 Dia. ID (ft & in.) N/A Length overall (ft & in.) N/A

9. When applicable, Certificate Holders' Data Reports are attached for each item of this report:

Part or Appurtenance Serial Number	National Board No. in Numerical Order	Part or Appurtenance Serial Number	National Board No. in Numerical Order
(1) 81292-5	N/A	(26)	
(2)		(27)	
(3)		(28)	
(4)		(29)	
(5)		(30)	
(6)		(31)	
(7)		(32)	
(8)		(33)	
(9)		(34)	
(10)		(35)	
(11)		(36)	
(12)		(37)	
(13)		(38)	
(14)		(39)	
(15)		(40)	
(16)		(41)	
(17)		(42)	
(18)		(43)	
(19)		(44)	
(20)		(45)	
(21)		(46)	
(22)		(47)	
(23)		(48)	
(24)		(49)	
(25)		(50)	

10. Design pressure 1250 psi. Temp. 575 °F. Hydro. test pressure N/A (when applicable) at temp. °F

* Supplemental information in the form of lists, sketches, or drawings may be used provided (1) size is 8½ x 11, (2) information in items 2 and 3 on this Data Report is included on each sheet, (3) each sheet is numbered and the number of sheets is recorded at the top of this form.

This form (E00040) may be obtained from the Order Dept., ASME, 22 Law Drive, Box 2300, Fairfield, NJ 07007-2300.

2

FORM N-2 (Back — Pg 2 of 2)

Certificate Holder's Serial Nos. 81292-5 through ---

CERTIFICATION OF DESIGN

Design specifications certified by Boyd Brooks (when applicable) P.E. State CA Reg. no. 13655

Design report* certified by S. L. Adams (when applicable) P.E. State NC Reg. no. 4187

CERTIFICATE OF COMPLIANCE

We certify that the statements made in this report are correct and that this (these) Part(s) conforms to the rules of construction of the ASME Code, Section III, Division 1.

NPT Certificate of Authorization No. N-1563 Expires November 26, 2006

Date 8/27/04 Name Flowserve Corporation (NPT Certificate Holder) Signed [signature] (authorized representative)

CERTIFICATE OF INSPECTION

I, the undersigned, holding a valid commission issued by the National Board of Boiler and Pressure Vessel Inspectors and the State or Province of NC and employed by HSB CT of Hartford, CT have inspected these items described in this Data Report on 8-27-04, and state that to the best of my knowledge and belief, the Certificate Holder has fabricated these parts or appurtenances in accordance with the ASME Code, Section III, Division 1. Each part listed has been authorized for stamping on the date shown above.

By signing this certificate, neither the inspector nor his employer makes any warranty, expressed or implied, concerning the equipment described in this Data Report. Furthermore, neither the inspector nor his employer shall be liable in any manner for any personal injury or property damage or loss of any kind arising from or connected with this inspection.

Date 8-27-04 Signed [signature] (Authorized Nuclear Inspector) Commissions NC 1421 (Nat'l. Bd. (incl. endorsements) and state or prov. and no.)

PLAN No 2-1965

ENERGY NORTHWEST
People·Vision·Solutions

FORM NIS-2 OWNER'S REPORT FOR REPAIRS OR REPLACEMENTS
As Required By The Provisions Of The ASME Code Section XI

1. Owner: Energy Northwest
Address: Columbia Generating Station, North Power Plant Loop, Richland, Washington, 99352
2. Plant: Columbia Generating Station
Address: Columbia Generating Station, North Power Plant Loop, Richland, Washington, 99352

Date: 06/10/05
Sheet: 1 Of 1
Unit: Not Applicable

3. (a) Work Performed By: Energy Northwest
(b) Repair Organization P.O. No, Job No, etc.: Energy Northwest
(c) Type Code Symbol Stamp: Not Applicable
(d) Certificate Of Authorization No.: Not Applicable
(e) Expiration Date: Not Applicable
4. Identification Of System: Main Steam (MS) System
5. (a) Applicable Construction Code: ASME Section III, Code Class 1, 1971 Edition with Winter 1971 Addenda, Code Case: None
(b) Applicable Edition Of ASME Section XI Utilized For Repairs Or Replacements: 1989 Edition with no Addenda, Code Case: None
6. Identification Of Components Repaired Or Replaced And Replacement Components

Name Of Component	Name Of Manufacturer	Manufacturer's Serial No	National Board No	Other I.D.	Year Built	Repaired, Replaced Or Replacement	ASME Code Stamped (Yes Or No) Code Class
MS-V-22C	Rockwell	JT-54	70	N/A	1973	----------	Yes, Code Class 1
Pilot disc	Rockwell	6033641-155	N/A	N/A	1989	Replaced	Yes, Code Class 1
Pilot disc	Rockwell	215585-36	N/A	N/A	1990	Replacement	Yes, Code Class 1
Main disc	Rockwell	215585-1	N/A	N/A	1990	Replaced	Yes, Code Class 1
Main disc	Rockwell	81292-5	N/A	N/A	2004	Replacement	Yes, Code Class 1

7. Description Of Work Performed: Replaced existing parts for valve MS-V-22C, Serial No JT-54. The replacement work was performed as follows

1) Removed existing pilot disc (stem disc) Serial No 6033641-155 from the valve.
2) Removed existing main disc (piston disc) Serial No 215585-1 from the valve.
3) Performed VT-3 visual examinations on the exposed surfaces of the two (2) existing studs for the valve body to bonnet joint. VT-3 visual examination results acceptable.
4) Performed VT-3 visual examinations on the two (2) existing nuts for the valve body to bonnet joint. VT-3 visual examination results acceptable.
5) Performed VT-1 visual examination on twenty (22) replacement studs for the valve body to bonnet joint for ISI (PSI). VT-1 visual examination results acceptable.
6) Performed VT-1 visual examination on twenty (22) replacement nuts for the valve body to bonnet joint for ISI (PSI). VT-1 visual examination results acceptable.
7) Installed replacement pilot disc (stem disc) Serial No 215585-36 in the valve.
8) Installed replacement main disc (piston disc) Serial No 81292-5 in the valve.
9) Reinstalled two (2) VT-3 visually examined existing studs for the valve body to bonnet joint.
10) Reinstalled two (2) VT-3 visually examined existing nuts for the valve body to bonnet joint.
11) Installed twenty two (22) VT-1 visually examined replacement studs for the valve body to bonnet joint.
12) Installed twenty two (22) VT-1 visually examined replacement nuts for the valve body to bonnet joint.
13) Performed VT-2 visual examination during pressure test to confirm pressure boundary integrity of the valve body to bonnet bolted joint. No evidence of leakage during the pressure test.

NOTES -

1) The ASME Section XI plans applicable to valve MS-V-22C are as follows:
   ASME Section XI Plan No 2-1963 - Assemble pilot disc (stem disc) and main disc (piston disc) for valve MS-V-22C.
   ASME Section XI Plan No 2-1964 - Work for bore ID for valve MS-V-22C.
   ASME Section XI Plan No 2-1965 - Replace parts for valve MS-V-22C.
2) Rockwell International/Edward Valves, Inc parts are now being manufactured by Flowserve.

PLAN No 2-1965

ENERGY NORTHWEST
People·Vision·Solutions

FORM NIS-2 OWNER'S REPORT FOR REPAIRS OR REPLACEMENTS (Back)

8 Tests Conducted: Hydrostatic ☐ *Pneumatic* ☐ *Nominal Operating Pressure* ☐ *Other* ☐ *

Test Pressure: Psig *Test Temperature:* °F

Component Design Pressure: Psig *Temperature:* °F

9. Remarks: 1) See attached N-2 Code Data Reports for the following replacement parts:

Part Description	Serial No
Pilot disc (stem disc)	215585-36
Main disc (piston disc)	81292-5

2) * The test pressure and the test temperature on the valve body to bonnet joint was recorded during ASME Section XI pressure test which was performed in accordance with PPM No OSP-RPV-R801 "Reactor Pressure Vessel Leakage Test".

CERTIFICATE OF COMPLIANCE

We certify that the statements made in this Owner's Report are correct and this replacement *conforms to the rules of the ASME Code, Section XI.*

Type Code Symbol Stamp: Not Applicable

Certificate Of Authorization No.: Not Applicable

Expiration Date: Not Applicable

Prepared By Kuldip Singh *Signed By* Kuldip Singh

Kuldip Singh - Program Lead Engineer (PLE) Kuldip Singh - Program Lead Engineer (PLE)

Date 6/15/05 *Date* 6/15/05

CERTIFICATE OF INSERVICE INSPECTION

I, the undersigned, holding a valid commission issued by the National Board of Boiler and Pressure Vessel Inspectors and the State of Washington *and employed by* Hartford Steam Boiler Of Connecticut of Hartford, Connecticut *have inspected the components described in this Owner's Report during the period* 4/21/2005 *to* 6/21/2005 *and state to the best of my knowledge and belief, the Owner has performed examinations and taken corrective measures described in this Owner's Report in accordance with the requirements of the ASME Code, Section XI.*

By signing this certificate neither the Inspector nor his employer makes any warranty, expressed or implied, concerning the examinations and corrective measures described in this Owner's Report. Furthermore, neither the Inspector nor his employer shall be liable in any manner for any personal injury or property damage or a loss of any kind arising from or connected with this inspection.

Inspector's Signature *Commissions* 10655W NB10655, A, B, N, I

National Board, State, and Endorsements

Date 6/21/2005

PLAN No. 2-1965

6/6/05

FORM N-2 CERTIFICATE HOLDERS' DATA REPORT FOR IDENTICAL NUCLEAR PARTS AND APPURTENANCES*

As Required by the Provisions of the ASME Code, Section III
Not To Exceed One Day's Production

Pg. 1 of 1

1. Manufactured and certified by Edward Valves, Inc., 1900 S. Saunders St., Raleigh, NC 27603 (name and address of NPT Certificate Holder)
2. Manufactured for Washington Public Power Supply System, Richland, Washington 99352 (name and address of purchaser)
3. Location of installation Hanford II, Richland, Washington 99352 (name and address)
4. Type PD422885 R/T (drawing no.) SA105 (mat'l. spec. no.) N/A (tensile strength) N/A (CRN) 1990 (year built)
5. ASME Code, Section III: 1971 (edition) Winter 1971 (addenda date) 1 (class) N/A (Code Case no.)
6. Fabricated in accordance with Const. Spec. (Div. 2 only) N/A (no.) Revision N/A Date N/A
7. Remarks: Three (3) stem disk/stem assemblies for size 26 figure 1612 JMANTY flite-flow balanced stop valve (Ref. S.O. E36-14487)
8. Nom. thickness (in.) N/A Min. design thickness (in.) Per #4 Dia. ID (ft & in.) N/A Length overall (ft & in.) N/A
9. When applicable, Certificate Holders' Data Reports are attached for each item of this report:

Part or Appurtenance Serial Number	National Board No. in Numerical Order	Part or Appurtenance Serial Number	National Board Number in Numerical Order
(1) 215585-35		(26)	
(2) 215585-36		(27)	
(3) 215585-37		(28)	
(4)		(29)	
(5)		(30)	
(6)		(31)	
(7) S/N 215585-36		(32)	
(8)		(33)	
(9)		(34)	
(10)		(35)	
(11)		(36)	
(12)		(37)	
(13)		(38)	
(14)		(39)	
(15)		(40)	
(16)		(41)	
(17)		(42)	
(18)		(43)	
(19)		(44)	
(20)		(45)	
(21)		(46)	
(22)		(47)	
(23)		(48)	
(24)		(49)	
(25)		(50)	

10. Design pressure 1250 psi. Temp. 575 °F. Hydro. test pressure N/A (when applicable) at temp. °F

*Supplemental information in the form of lists, sketches, or drawings may be used provided (1) size is 8½ x 11, (2) information in items 2 and 3 on this Data Report is included on each sheet, (3) each sheet is numbered and the number of sheets is recorded at the top of this form.

(12/86) This form (E00040) may be obtained from the Order Dept., ASME, 22 Law Drive, Box 2300, Fairfield, NJ 07007-2300.

2

FOR INFORMATION ONLY

2 4 U 0 9 U 3 5

FORM N-2 (back)

Mfr. Serial No. 215585-353637

CERTIFICATION OF DESIGN

Design specifications certified by Boyd Brooks (when applicable) P.E. State CA Reg. no. 13655

Design report* certified by S.L. Adams III (when applicable) P.E. State NC Reg. no. 4487

CERTIFICATE OF SHOP COMPLIANCE

We certify that the statements made in this report are correct and that this (these) Parts conforms to the rules of construction of the ASME Code, Section III.

NPT Certificate of Authorization No. N-1563 Expires 11/26/91

Date 9/18/90 Name Edward Valves, Inc. (NPT Certificate Holder) Signed R L Creech (Authorized Representative)

CERTIFICATE OF SHOP INSPECTION

I, the undersigned, holding a valid commission issued by the National Board of Boiler and Pressure Vessel Inspectors and the State or Province of North Carolina and employed by The Hartford Steam Boiler Inspection & Insurance Company of Hartford, CT have inspected these items described in this Data Report on 9-18-90, and state that to the best of my knowledge and belief, the Certificate Holder has fabricated these parts or appurtenances in accordance with the ASME Code, Section III. Each part listed has been authorized for stamping on the date shown above.

By signing this certificate, neither the inspector nor his employer makes any warranty, expressed or implied, concerning the equipment described in this Data Report. Furthermore, neither the inspector nor his employer shall be liable in any manner for any personal injury or property damage or loss of any kind arising from or connected with this inspection.

Date 9-18-90 Signed [signature] (Authorized Inspector) Commissions NC1083 (Nat'l. Bd. Incl. endorsements, state or prov. and no.)

VERIFIED & ACCEPTED [signature] REC. INSPECTOR
LEVEL II DATE 11-8 90

FOR INFORMATION ONLY

PLAN No. 2-1965
[illegible]
6/6/05

FORM N-2 CERTIFICATE HOLDERS' DATA REPORT FOR IDENTICAL NUCLEAR PARTS AND APPURTENANCES*

As Required by the Provisions of the ASME Code, Section III
Not to Exceed One Day's Production

1. Manufactured and certified by Flowserve Corporation, 1900 S. Saunders St., Raleigh, NC 27603
(name and address of NPT Certificate Holder)

2. Manufactured for Energy Northwest, P. O. Box 968, Richland, WA 99352
(name and address of purchaser)

3. Location of installation Energy Northwest, Columbia Generating Station, N. Powerplant Loop, Richland, WA
(name and address)

4. Type PD-422885, R/E* (drawing no.) SA105 (mat'l. spec. no.) N/A (tensile strength) N/A (CRN) 2004 (year built)

5. ASME Code, Section III, Division 1: 1971 (edition) Winter, 1971 (addenda date) 1 (class) N/A (Code Case no.)

6. Fabricated in accordance with Const. Spec. (Div. 2 only) N/A (no.) Revision N/A Date N/A

7. Remarks: Disk-Piston assembly for 26" 1612JMMNTY Valve
Disk material meets ASME Section II, 1974 Edition
* Sheet 3B. Sheet 1, R/U S. O. 29257

8. Nom. thickness (in.) N/A Min. design thickness (in.) Per #4 Dia. ID (ft & in.) N/A Length overall (ft & in.) N/A

9. When applicable, Certificate Holders' Data Reports are attached for each item of this report:

Part or Appurtenance Serial Number	National Board No. in Numerical Order	Part or Appurtenance Serial Number	National Board No. in Numerical Order
(1) 81292-5	N/A	(26)	
(2)		(27)	
(3)		(28)	
(4)		(29)	
(5)		(30)	
(6)		(31)	
(7)		(32)	
(8)		(33)	
(9)		(34)	
(10)		(35)	
(11)		(36)	
(12)		(37)	
(13)		(38)	
(14)		(39)	
(15)		(40)	
(16)		(41)	
(17)		(42)	
(18)		(43)	
(19)		(44)	
(20)		(45)	
(21)		(46)	
(22)		(47)	
(23)		(48)	
(24)		(49)	
(25)		(50)	

10. Design pressure 1250 psi. Temp. 575 °F. Hydro. test pressure N/A (when applicable) at temp. °F

* Supplemental information in the form of lists, sketches, or drawings may be used provided (1) size is 8½ x 11, (2) information in items 2 and 3 on this Data Report is included on each sheet, (3) each sheet is numbered and the number of sheets is recorded at the top of this form.

This form (E00040) may be obtained from the Order Dept., ASME, 22 Law Drive, Box 2300, Fairfield, NJ 07007-2300.

FORM N-2 (Back — Pg 2 of 2)

Certificate Holder's Serial Nos. 81292-5 through ---

CERTIFICATION OF DESIGN

Design specifications certified by Boyd Brooks (when applicable) P.E. State CA Reg. no. 13655

Design report* certified by S. L. Adams (when applicable) P.E. State NC Reg. no. 4187

CERTIFICATE OF COMPLIANCE

We certify that the statements made in this report are correct and that this (these) Part(s) conforms to the rules of construction of the ASME Code, Section III, Division 1.

NPT Certificate of Authorization No. N-1563 Expires November 26, 2006

Date 8/27/04 Name Flowserve Corporation (NPT Certificate Holder) Signed [signature] (authorized representative)

CERTIFICATE OF INSPECTION

I, the undersigned, holding a valid commission issued by the National Board of Boiler and Pressure Vessel Inspectors and the State or Province of NC and employed by HSB CT of Hartford, CT have inspected these items described in this Data Report on 8-27-04, and state that to the best of my knowledge and belief, the Certificate Holder has fabricated these parts or appurtenances in accordance with the ASME Code, Section III, Division 1. Each part listed has been authorized for stamping on the date shown above.

By signing this certificate, neither the inspector nor his employer makes any warranty, expressed or implied, concerning the equipment described in this Data Report. Furthermore, neither the inspector nor his employer shall be liable in any manner for any personal injury or property damage or loss of any kind arising from or connected with this inspection.

Date 8-27-04 Signed [signature] (Authorized Nuclear Inspector) Commissions NC 1421 (Nat'l. Bd. (incl. endorsements) and state or prov. and no.)

PLAN No 2-1966

ENERGY NORTHWEST
People·Vision·Solutions

FORM NIS-2 OWNER'S REPORT FOR REPAIRS OR REPLACEMENTS
As Required By The Provisions Of The ASME Code Section XI

Date: 06/10/05
Sheet: 1 Of 1
Unit: Not Applicable

1. Owner: Energy Northwest
Address: Columbia Generating Station, North Power Plant Loop, Richland, Washington, 99352
2. Plant: Columbia Generating Station
Address: Columbia Generating Station, North Power Plant Loop, Richland, Washington, 99352
3. (a) Work Performed By: Energy Northwest
(b) Repair Organization P.O. No, Job No, etc.: Energy Northwest
(c) Type Code Symbol Stamp: Not Applicable
(d) Certificate Of Authorization No.: Not Applicable
(e) Expiration Date: Not Applicable
4. Identification Of System: Main Steam (MS) System
5. (a) Applicable Construction Code: ASME Section III, Code Class 1, 1971 Edition with Winter 1971 Addenda, Code Case: None
(b) Applicable Edition Of ASME Section XI Utilized For Repairs Or Replacements: 1989 Edition with no Addenda, Code Case: None
6. Identification Of Components Repaired Or Replaced And Replacement Components

Name Of Component	Name Of Manufacturer	Manufacturer's Serial No	National Board No	Other I.D.	Year Built	Repaired, Replaced Or Replacement	ASME Code Stamped (Yes Or No) Code Class
MS-V-28A	Rockwell	JU-53	78	N/A	1973	----------	Yes, Code Class 1
Pilot disc	Rockwell	6033641-7	N/A	N/A	1987	Replacement	Yes, Code Class 1
Main disc	Rockwell	81292-4	N/A	N/A	2004	Replacement	Yes, Code Class 1

7. Description Of Work Performed: Assembled pilot disc (stem disc) main disc (piston disc) for use for valve MS-V-28A, Serial No JU-53. The parts were assembled as follows:

1) Assembled pilot disc (stem disc) Serial No 6033641-7.
2) Assembled main disc (piston disc) Serial No 81292-4.

NOTES -

1) The ASME Section XI plans applicable to valve MS-V-28A are as follows:
   ASME Section XI Plan No 2-1966 - Assemble pilot disc (stem disc) and main disc (piston disc) for valve MS-V-28A.
   ASME Section XI Plan No 2-1967 - Work for bore ID for valve MS-V-28A.
   ASME Section XI Plan No 2-1968 - Replace parts for valve MS-V-28A.
2) Rockwell International/Edward Valves, Inc parts are now being manufactured by Flowserve.

PLAN No 2-1966

ENERGY NORTHWEST
People·Vision·Solutions

FORM NIS-2 OWNER'S REPORT FOR REPAIRS OR REPLACEMENTS (Back)

8 Tests Conducted: Hydrostatic [ ] Pneumatic [ ] Nominal Operating Pressure [ ] Other [•]
Test Pressure: Psig Test Temperature: °F
Component Design Pressure: Psig Temperature: °F

9. Remarks: 1) See attached N-2 Code Data Reports for the following replacement parts:

Part Description	Serial No
Pilot disc (stem disc)	6033641-7
Main disc (piston disc)	81292-4

2) * See ASME Section XI Plan No 2-1968 for the pressure test.

CERTIFICATE OF COMPLIANCE

We certify that the statements made in this Owner's Report are correct and this replacement *conforms to the rules of the ASME Code, Section XI.*
Type Code Symbol Stamp: Not Applicable
Certificate Of Authorization No.: Not Applicable
Expiration Date: Not Applicable

Prepared By Kuldip Singh - Program Lead Engineer (PLE) Signed By Kuldip Singh - Program Lead Engineer (PLE)
Date 6/16/05 Date 6/16/05

CERTIFICATE OF INSERVICE INSPECTION

I, the undersigned, holding a valid commission issued by the National Board of Boiler and Pressure Vessel Inspectors and the State of Washington *and employed by* Hartford Steam Boiler Of Connecticut of Hartford, Connecticut *have inspected the components described in this Owner's Report during the period* 4/20/2005 *to* 6/21/2005 *and state to the best of my knowledge and belief, the Owner has performed examinations and taken corrective measures described in this Owner's Report in accordance with the requirements of the ASME Code, Section XI.*
By signing this certificate neither the Inspector nor his employer makes any warranty, expressed or implied, concerning the examinations and corrective measures described in this Owner's Report. Furthermore, neither the Inspector nor his employer shall be liable in any manner for any personal injury or property damage or a loss of any kind arising from or connected with this inspection.

Inspector's Signature Commissions 10655W NB 10655 A, B, N, E
National Board, State, and Endorsements

Date 6/21/2005

PLAN No. 2-1966

FORM N-2 N OR NPT CERTIFICATE HOLDERS' DATA REPORT FOR IDENTICAL NUCLEAR PARTS AND APPURTENANCES*

As Required by the Provisions of the ASME Code, Section III, Division 1
Not To Exceed One Day's Production

6/6/85 Pg 1 of 1

1. Manufactured and certified by Rockwell International Corp., 1900 S. Saunders St., Raleigh, NC 27603
(name and address of certificate holder)

2. Manufactured for Washington Public Power Supply System, Richland, WA, 99352-0968
(name and address of purchaser)

3. Location of installation Hanford II, Richland, WA 99352
(name and address)

4. Type PD-422885 Rev. N (drawing no.) | See Below (nat'l spec no.) | N/A (tensile strength) | N/A (CRN) | 1987 (year built)

5. ASME Code, Section III: 1971 (edition) | Winter '71 (addenda) | 1 (class) | N/A (Code Case no.)

6. Fabricated in accordance with Const. Spec. (Div. 2 only) N/A (No.) Revision N/A Date N/A

7. Remarks: Three (3) Stem Disk (SA-105) for 26" 1612 JMMNTY Main Steam Isolation Valve.
Rockwell S. O. # 36-35834

8. Nom. thickness (in.) N/A Min. design thickness (in.) Per#4 Dia. ID (ft. & in.) N/A Length overall (ft. & in.) N/A

9. When applicable, Certificate Holders' data reports are attached for each item of this report:

Part or Appurtenance Serial Number	National Board No. in Numerical Order	Part or Appurtenance Serial Number	National Board Number in Numerical Order
(1) 6033641 SRL 7	N/A	(26)	
(2) 6033641 SRL 8	N/A	(27)	
(3) 6033641 SRL 9	N/A	(28)	
(4)		(29)	
(5)		(30)	
(6) S/N 6033641-7		(31)	
(7)		(32)	
(8)		(33)	
(9)		(34)	
(10)		(35)	
(11)		(36)	
(12)		(37)	
(13)		(38)	
(14)		(39)	
(15)		(40)	
(16)		(41)	
(17)		(42)	
(18)		(43)	
(19)		(44)	
(20)		(45)	
(21)		(46)	
(22)		(47)	
(23)		(48)	
(24)		(49)	
(25)		(50)	

10. Design pressure 1250 psi Temp. 575 °F. Hydro. test pressure N/A (when applicable) at temp. °F.

3-26-87

*Supplemental information in form of lists, sketches or drawings may be used provided (1) size is 8½ × 11, (2) information in items 2 and 3 on this data report is included on each sheet, (3) each

STEM DISC
S/N 60 33641 SRL 7
S/N 60 33641 SRL 8
S/N 60 33641 SRL 9

FORM N-2 (back)

Rudolph Sup 5
4/28/88

CERTIFICATE OF DESIGN

Design specifications certified by Boyd Brooks P. E. state CA Reg. no. 13655

Design report* certified by Salathiel Liell Adams, III P. E. state NC Reg. no. 4187
(when applicable)

CERTIFICATE OF SHOP COMPLIANCE

We certify that the statements made in this report are correct and that this (these) Parts conform to the rules of construction of the ASME Code, Section III.

ASME Certificate of Authorization no. N-1563 Expires 11/26/88

Date 3/26/87 Name Rockwell International Corp. Signed W. H. Rains
(NPT Certificate Holder) (authorized representative)

CERTIFICATE OF SHOP INSPECTION

I, the undersigned, holding a valid commission issued by the National Board of Boiler and Pressure Vessel Inspectors and the state or province of North Carolina and employed by HSBI & I Co. of Hartford, CT have inspected these items described in this data report on 3-27-87, and state that to the best of my knowledge and belief, the Certificate Holder has fabricated these parts or appurtenances in accordance with the ASME Code, Section III. Each part listed has been authorized for stamping on the date shown above.

By signing this certificate, neither the inspector nor his employer makes any warranty, expressed or implied, concerning the equipment described in this data report. Furthermore, neither the inspector nor his employer shall be liable in any manner for any personal injury or property damage or loss of any kind arising from or connected with this inspection.

Date 3-27-87 Signed [illegible] Commissions NC. 1083
(Authorized Inspector) (Nat'l. Bd. (incl. endorsements) state or prov. and no.)

PLAN No. 2-1966
6/6/05.

FORM N-2 CERTIFICATE HOLDERS' DATA REPORT FOR IDENTICAL NUCLEAR PARTS AND APPURTENANCES*

As Required by the Provisions of the ASME Code, Section III
Not to Exceed One Day's Production

1. Manufactured and certified by Flowserve Corporation, 1900 S. Saunders St., Raleigh, NC 27603 (name and address of NPT Certificate Holder)
2. Manufactured for Energy Northwest, P. O. Box 968, Richland, WA 99352 (name and address of purchaser)
3. Location of installation Energy Northwest, Columbia Generating Station, N. Powerplant Loop, Richland, WA (name and address)
4. Type PD-422885, R/E* (drawing no.) SA105 (mat'l. spec. no.) N/A (tensile strength) N/A (CRN) 2004 (year built)
5. ASME Code, Section III, Division 1: 1971 (edition) Winter, 1971 (addenda date) 1 (class) N/A (Code Case no.)
6. Fabricated in accordance with Const. Spec. (Div. 2 only) N/A (no.) Revision N/A Date N/A
7. Remarks: Disk-Piston assembly for 26" 1612JMMNTY Valve
Disk material meets ASME Section II, 1974 Edition
* Sheet 3B. Sheet 1, R/U S. O. 29257
8. Nom. thickness (in.) N/A Min. design thickness (in.) Per #4 Dia. ID (ft & in.) N/A Length overall (ft & in.) N/A
9. When applicable, Certificate Holders' Data Reports are attached for each item of this report:

	Part or Appurtenance Serial Number	National Board No. in Numerical Order
(1)	81292-4	N/A
(2)		
(3)		
(4)		
(5)		
(6)		
(7)		
(8)		
(9)		
(10)		
(11)		
(12)		
(13)		
(14)		
(15)		
(16)		
(17)		
(18)		
(19)		
(20)		
(21)		
(22)		
(23)		
(24)		
(25)		

	Part or Appurtenance Serial Number	National Board No. in Numerical Order
(26)		
(27)		
(28)		
(29)		
(30)		
(31)		
(32)		
(33)		
(34)		
(35)		
(36)		
(37)		
(38)		
(39)		
(40)		
(41)		
(42)		
(43)		
(44)		
(45)		
(46)		
(47)		
(48)		
(49)		
(50)		

10. Design pressure 1250 psi. Temp. 575 °F. Hydro. test pressure N/A (when applicable) at temp. °F

* Supplemental information in the form of lists, sketches, or drawings may be used provided (1) size is 8½ x 11, (2) information in items 2 and 3 on this Data Report is included on each sheet, (3) each sheet is numbered and the number of sheets is recorded at the top of this form.

(7/98) This form (E00040) may be obtained from the Order Dept., ASME, 22 Law Drive, Box 2300, Fairfield, NJ 07007-2300.

3

FORM N-2 (Back — Pg 2 of 2)

Certificate Holder's Serial Nos. 81292-4 through ---

CERTIFICATION OF DESIGN

Design specifications certified by Boyd Brooks (when applicable) P.E. State CA Reg. no. 13655

Design report* certified by S. L. Adams (when applicable) P.E. State NC Reg. no. 4187

CERTIFICATE OF COMPLIANCE

We certify that the statements made in this report are correct and that this (these) Part(s) conforms to the rules of construction of the ASME Code, Section III, Division 1.

NPT Certificate of Authorization No. N-1563 Expires November 26, 2006

Date 8/27/04 Name Flowserve Corporation (NPT Certificate Holder) Signed (authorized representative)

CERTIFICATE OF INSPECTION

I, the undersigned, holding a valid commission issued by the National Board of Boiler and Pressure Vessel Inspectors and the State or Province of NC and employed by HSB CT of Hartford, CT have inspected these items described in this Data Report on 8-27-04, and state that to the best of my knowledge and belief, the Certificate Holder has fabricated these parts or appurtenances in accordance with the ASME Code, Section III, Division 1. Each part listed has been authorized for stamping on the date shown above.

By signing this certificate, neither the inspector nor his employer makes any warranty, expressed or implied, concerning the equipment described in this Data Report. Furthermore, neither the inspector nor his employer shall be liable in any manner for any personal injury or property damage or loss of any kind arising from or connected with this inspection.

Date 8-27-04 Signed (Authorized Nuclear Inspector) Commissions NC1421 (Nat'l. Bd. (incl. endorsements) and state or prov. and no.)

PLAN No 2-1968

ENERGY NORTHWEST
People·Vision·Solutions

FORM NIS-2 OWNER'S REPORT FOR REPAIRS OR REPLACEMENTS
As Required By The Provisions Of The ASME Code Section XI

Date: 06/11/05
Sheet: 1 Of 1
Unit: Not Applicable

1. **Owner:** Energy Northwest
   Address: Columbia Generating Station, North Power Plant Loop, Richland, Washington, 99352
2. **Plant:** Columbia Generating Station
   Address: Columbia Generating Station, North Power Plant Loop, Richland, Washington, 99352
3. **(a) Work Performed By:** Energy Northwest
   (b) Repair Organization P.O. No, Job No, etc.: Energy Northwest
   (c) Type Code Symbol Stamp: Not Applicable
   (d) Certificate Of Authorization No.: Not Applicable
   (e) Expiration Date: Not Applicable
4. **Identification Of System:** Main Steam (MS) System
5. **(a) Applicable Construction Code:** ASME Section III, Code Class 1, 1971 Edition with Winter 1971 Addenda, Code Case: None
   (b) Applicable Edition Of ASME Section XI Utilized For Repairs Or Replacements: 1989 Edition with no Addenda, Code Case: None
6. **Identification Of Components Repaired Or Replaced And Replacement Components**

Name Of Component	Name Of Manufacturer	Manufacturer's Serial No	National Board No	Other I.D.	Year Built	Repaired, Replaced Or Replacement	ASME Code Stamped (Yes Or No) Code Class
MS-V-28A	Rockwell	JU-53	78	N/A	1973	----------	Yes, Code Class 1
Pilot disc	Rockwell	6033641-156	N/A	N/A	1989	Replaced	Yes, Code Class 1
Pilot disc	Rockwell	6033641-7	N/A	N/A	1987	Replacement	Yes, Code Class 1
Main disc	Rockwell	6053657-154	N/A	N/A	1989	Replaced	Yes, Code Class 1
Main disc	Rockwell	81292-4	N/A	N/A	2004	Replacement	Yes, Code Class 1

7. **Description Of Work Performed:** Replaced existing parts for valve MS-V-28A, Serial No JU-53. The replacement work was performed as follows
   1) Removed existing pilot disc (stem disc) Serial No 6033641-156 from the valve.
   2) Removed existing main disc (piston disc) Serial No 6053657-154 from the valve.
   3) Performed VT-1 visual examination on replacement studs for the valve body to bonnet joint for ISI (PSI). VT-1 visual examination results acceptable.
   4) Performed VT-1 visual examination on replacement nuts for the valve body to bonnet joint for ISI (PSI). VT-1 visual examination results acceptable.
   5) Installed replacement pilot disc (stem disc) Serial No 6033641-7 in the valve.
   6) Installed replacement main disc (piston disc) Serial No 81292-4 in the valve.
   7) Installed twenty four (24) VT-1 visually examined replacement studs for the valve body to bonnet joint.
   8) Installed twenty four (24) VT-1 visually examined replacement nuts for the valve body to bonnet joint.
   9) Performed VT-2 visual examination during pressure test to confirm pressure boundary integrity of the valve body to bonnet bolted joint. No evidence of leakage during the pressure test.

NOTES -

1) The ASME Section XI plans applicable to valve MS-V-28A are as follows:
   ASME Section XI Plan No 2-1966 - Assemble pilot disc (stem disc) and main disc (piston disc) for valve MS-V-28A.
   ASME Section XI Plan No 2-1967 - Work for bore ID for valve MS-V-28A.
   ASME Section XI Plan No 2-1968 - Replace parts for valve MS-V-28A.
2) Rockwell International/Edward Valves, Inc parts are now being manufactured by Flowserve.

PLAN No 2-1968

ENERGY NORTHWEST
People·Vision·Solutions

FORM NIS-2 OWNER'S REPORT FOR REPAIRS OR REPLACEMENTS (Back)

8 Tests Conducted: Hydrostatic ☐ *Pneumatic* ☐ *Nominal Operating Pressure* ☐ *Other* ☒

Test Pressure: 1020 Psig *Test Temperature:* 170° F
Component Design Pressure: 1250 Psig *Temperature:* 575° F

9. Remarks: 1) See attached N-2 Code Data Reports for the following replacement parts:

Part Description	Serial No
Pilot disc (stem disc)	6033641-7
Main disc (piston disc)	81292-4

2) * The test pressure and the test temperature on the valve body to bonnet joint was recorded during ASME Section XI pressure test which was performed in accordance with PPM No OSP-RPV-R801 "Reactor Pressure Vessel Leakage Test".

CERTIFICATE OF COMPLIANCE

We certify that the statements made in this Owner's Report are correct and this replacement *conforms to the rules of the ASME Code, Section XI.*
Type Code Symbol Stamp: Not Applicable
Certificate Of Authorization No.: Not Applicable
Expiration Date: Not Applicable

Prepared By Kuldip Singh *Signed By* Kuldip Singh
Kuldip Singh - Program Lead Engineer (PLE) Kuldip Singh - Program Lead Engineer (PLE)
Date 6/11/05 *Date* 6/11/05

CERTIFICATE OF INSERVICE INSPECTION

I, the undersigned, holding a valid commission issued by the National Board of Boiler and Pressure Vessel Inspectors and the State of Washington *and employed by* Hartford Steam Boiler Of Connecticut of Hartford, Connecticut *have inspected the components described in this Owner's Report during the period* 4/20/2005 *to* 6/15/2005 *and state to the best of my knowledge and belief, the Owner has performed examinations and taken corrective measures described in this Owner's Report in accordance with the requirements of the ASME Code, Section XI.*
By signing this certificate neither the Inspector nor his employer makes any warranty, expressed or implied, concerning the examinations and corrective measures described in this Owner's Report. Furthermore, neither the Inspector nor his employer shall be liable in any manner for any personal injury or property damage or a loss of any kind arising from or connected with this inspection.

Inspector's Signature *Commissions* 1065542 A, B, N, E
National Board, State, and Endorsements

Date 6/15/2005

PLAN No. 2-1968

FORM N-2 N OR NPT CERTIFICATE HOLDERS' DATA REPORT FOR IDENTICAL NUCLEAR PARTS AND APPURTENANCES*

As Required by the Provisions of the ASME Code, Section III, Division 1
Not To Exceed One Day's Production

4/6/05

Pg 1 of 1

1. Manufactured and certified by Rockwell International Corp., 1900 S. Saunders St., Raleigh, NC 27603
(name and address of certificate holder)

2. Manufactured for Washington Public Power Supply System, Richland, WA, 99352-0968
(name and address of purchaser)

3. Location of installation Hanford II, Richland, WA 99352
(name and address)

4. Type PD-422885 Rev. N (drawing no.) See Below (nat'l spec. no.) N/A (tensile strength) N/A (CRN) 1987 (year built)

5. ASME Code, Section III: 1971 (edition) Winter '71 (addenda) 1 (class) N/A (Code Case no.)

6. Fabricated in accordance with Const. Spec. (Div. 2 only) N/A (No.) Revision N/A Date N/A

7. Remarks: Three (3) Stem Disk (SA-105) for 26" 1612 JMMNTY Main Steam Isolation Valve.
Rockwell S. O. # 36-35834

8. Nom. thickness (in.) N/A Min. design thickness (in.) Per#4 Dia. ID (ft. & in.) N/A Length overall (ft. & in.) N/A

9. When applicable, Certificate Holders' data reports are attached for each item of this report:

Part or Appurtenance Serial Number	National Board No. in Numerical Order	Part or Appurtenance Serial Number	National Board Number in Numerical Order
(1) 6033641 SRL 7	N/A	(26)	
(2) 6033641 SRL 8	N/A	(27)	
(3) 6033641 SRL 9	N/A	(28)	
(4)		(29)	
(5)		(30)	
(6)		(31)	
(7) S/N 6033641-1		(32)	
(8)		(33)	
(9)		(34)	
(10)		(35)	
(11)		(36)	
(12)		(37)	
(13)		(38)	
(14)		(39)	
(15)		(40)	
(16)		(41)	
(17)		(42)	
(18)		(43)	
(19)		(44)	
(20)		(45)	
(21)		(46)	
(22)		(47)	
(23)		(48)	
(24)		(49)	
(25)		(50)	

10. Design pressure 1250 psi Temp. 575 °F. Hydro. test pressure N/A (when applicable) at temp. °F.

3-26-87

*Supplemental information in form of lists, sketches or drawings may be used provided (1) size is 8½ × 11, (2) information in items 2 and 3 on this data report is included on each sheet, (3) each

STEM DISC
S/N 60 33641 SRL7
S/N 60 33641 SRL8
S/N 60 33641 SRL9

FORM N-2 (back)

Rudolph Sup's
4/28/88

CERTIFICATE OF DESIGN

Design specifications certified by Boyd Brooks P. E. state CA Reg. no. 13655

Design report* certified by Salathiel Liell Adams, III P. E. state NC Reg. no. 4187
(when applicable)

CERTIFICATE OF SHOP COMPLIANCE

We certify that the statements made in this report are correct and that this (these) Parts conform to the rules of construction of the ASME Code, Section III.

ASME Certificate of Authorization no. N-1563 Expires 11/26/88

Date 3/26/87 Name Rockwell International Corp. (NPT Certificate Holder) Signed D. H. Rains (authorized representative)

CERTIFICATE OF SHOP INSPECTION

I, the undersigned, holding a valid commission issued by the National Board of Boiler and Pressure Vessel Inspectors and the state or province of North Carolina and employed by HSBI & I Co. of Hartford, CT have inspected these items described in this data report on 3-27-87, and state that to the best of my knowledge and belief, the Certificate Holder has fabricated these parts or appurtenances in accordance with the ASME Code, Section III. Each part listed has been authorized for stamping on the date shown above.

By signing this certificate, neither the inspector nor his employer makes any warranty, expressed or implied, concerning the equipment described in this data report. Furthermore, neither the inspector nor his employer shall be liable in any manner for any personal injury or property damage or loss of any kind arising from or connected with this inspection.

Date 3-27-87 Signed (Authorized Inspector) Commissions NC. 1083 (Nat'l Bd. (incl. endorsements) state or prov. and no.)

PLDN NO. 2-1968
Philip Sugg
6/6/05

FORM N-2 CERTIFICATE HOLDERS' DATA REPORT FOR IDENTICAL NUCLEAR PARTS AND APPURTENANCES*

As Required by the Provisions of the ASME Code, Section III
Not to Exceed One Day's Production

1. Manufactured and certified by Flowserve Corporation, 1900 S. Saunders St., Raleigh, NC 27603 (name and address of NPT Certificate Holder)
2. Manufactured for Energy Northwest, P. O. Box 968, Richland, WA 99352 (name and address of purchaser)
3. Location of installation Energy Northwest, Columbia Generating Station, N. Powerplant Loop, Richland, WA (name and address)
4. Type PD-422885, R/E* (drawing no.) SA105 (mat'l. spec. no.) N/A (tensile strength) N/A (CRN) 2004 (year built)
5. ASME Code, Section III, Division 1: 1971 (edition) Winter, 1971 (addenda date) 1 (class) N/A (Code Case no.)
6. Fabricated in accordance with Const. Spec. (Div. 2 only) N/A (no.) Revision N/A Date N/A
7. Remarks: Disk-Piston assembly for 26" 1612JMMNTY Valve
Disk material meets ASME Section II, 1974 Edition
* Sheet 3B. Sheet 1, R/U S. O. 29257
8. Nom. thickness (in.) N/A Min. design thickness (in.) Per #4 Dia. ID (ft & in.) N/A Length overall (ft & in.) N/A
9. When applicable, Certificate Holders' Data Reports are attached for each item of this report:

Part or Appurtenance Serial Number	National Board No. In Numerical Order	Part or Appurtenance Serial Number	National Board No. In Numerical Order
(1) 81292-4	N/A	(26)	
(2)		(27)	
(3)		(28)	
(4)		(29)	
(5)		(30)	
(6)		(31)	
(7)		(32)	
(8)		(33)	
(9)		(34)	
(10)		(35)	
(11)		(36)	
(12)		(37)	
(13)		(38)	
(14)		(39)	
(15)		(40)	
(16)		(41)	
(17)		(42)	
(18)		(43)	
(19)		(44)	
(20)		(45)	
(21)		(46)	
(22)		(47)	
(23)		(48)	
(24)		(49)	
(25)		(50)	

10. Design pressure 1250 psi. Temp. 575 °F. Hydro. test pressure N/A (when applicable) at temp. °F

* Supplemental information in the form of lists, sketches, or drawings may be used provided (1) size is 8½ x 11, (2) information in items 2 and 3 on this Data Report is included on each sheet, (3) each sheet is numbered and the number of sheets is recorded at the top of this form.

FORM N-2 (Back — Pg 2 of 2)

Certificate Holder's Serial Nos. 81292-4 through ---

CERTIFICATION OF DESIGN

Design specifications certified by Boyd Brooks (when applicable) P.E. State CA Reg. no. 13655

Design report* certified by S. L. Adams (when applicable) P.E. State NC Reg. no. 4187

CERTIFICATE OF COMPLIANCE

We certify that the statements made in this report are correct and that this (these) Part(s) conforms to the rules of construction of the ASME Code, Section III, Division 1.

NPT Certificate of Authorization No. N-1563 Expires November 26, 2006

Date 8/27/04 Name Flowserve Corporation (NPT Certificate Holder) Signed (authorized representative)

CERTIFICATE OF INSPECTION

I, the undersigned, holding a valid commission issued by the National Board of Boiler and Pressure Vessel Inspectors and the State or Province of NC and employed by HSB CT of Hartford, CT have inspected these items described in this Data Report on 8-27-04, and state that to the best of my knowledge and belief, the Certificate Holder has fabricated these parts or appurtenances in accordance with the ASME Code, Section III, Division 1. Each part listed has been authorized for stamping on the date shown above.

By signing this certificate, neither the inspector nor his employer makes any warranty, expressed or implied, concerning the equipment described in this Data Report. Furthermore, neither the inspector nor his employer shall be liable in any manner for any personal injury or property damage or loss of any kind arising from or connected with this inspection.

Date 8-27-04 Signed (Authorized Nuclear Inspector) Commissions NC1421 (Nat'l. Bd. [incl. endorsements] and state or prov. and no.)

PLAN No 2-1969

ENERGY NORTHWEST
People·Vision·Solutions

FORM NIS-2 OWNER'S REPORT FOR REPAIRS OR REPLACEMENTS
As Required By The Provisions Of The ASME Code Section XI

Date: 06/09/05
Sheet: 1 Of 1
Unit: Not Applicable

1. **Owner:** Energy Northwest
   Address: Columbia Generating Station, North Power Plant Loop, Richland, Washington, 99352
2. **Plant:** Columbia Generating Station
   Address: Columbia Generating Station, North Power Plant Loop, Richland, Washington, 99352
3. **(a) Work Performed By:** Energy Northwest
   (b) Repair Organization P.O. No, Job No, etc.: Energy Northwest
   (c) Type Code Symbol Stamp: Not Applicable
   (d) Certificate Of Authorization No.: Not Applicable
   (e) Expiration Date: Not Applicable
4. **Identification Of System:** Fuel Pool Cooling (FPC) System
5. **(a) Applicable Construction Code:** ASME Section III, Code Class 3, 1971 Edition with Winter 1972 Addenda, Code Case: None
   (b) Applicable Edition Of ASME Section XI Utilized For Repairs Or Replacements: 1989 Edition with no Addenda, Code Case: None
6. **Identification Of Components Repaired Or Replaced And Replacement Components**

Name Of Component	Name Of Manufacturer	Manufacturer's Serial No	National Board No	Other I.D.	Year Built	Repaired, Replaced Or Replacement	ASME Code Stamped (Yes Or No) Code Class
FPC-V-112B	Anchor Darling	3N-376	N/A	N/A	1975	Repaired	Yes, Code Class 3

7. **Description Of Work Performed:** Machined existing hinge pins for valve FPC-V-112B, Serial No 3N-376. The work was performed as follows:
   1) Machined both the existing hinge pins.
   2) Surface finished the machined surfaces on as needed basis for both the existing hinge pins.
   3) Performed VT-3 visual examination on the existing studs for the valve body to bonnet joint. VT-3 visual examination results acceptable.
   4) Performed VT-3 visual examination on the existing nuts for the valve body to bonnet joint. VT-3 visual examination results acceptable.
   5) Reinstalled both the existing hinge pins
   6) Reinstalled VT-3 visually examined existing studs for the valve body to bonnet joint.
   7) Reinstalled VT-3 visually examined existing nuts for the valve body to bonnet joint.
   8) Performed VT-2 visual examination during pressure test to confirm pressure boundary integrity of the valve body to bonnet joint. No evidence of leakage during the pressure test.

PLAN No 2-1969

ENERGY NORTHWEST
People·Vision·Solutions

FORM NIS-2 OWNER'S REPORT FOR REPAIRS OR REPLACEMENTS (Back)

8 Tests Conducted: Hydrostatic [ ] Pneumatic [ ] Nominal Operating Pressure [X] Other [ ]

Test Pressure: 100 Psig — Test Temperature: 90° F

Component Design Pressure: 275 Psig — Temperature: 100° F

9. Remarks (Applicable Manufacturer's Data Reports to be attached): None

CERTIFICATE OF COMPLIANCE

We certify that the statements made in this Owner's Report are correct and this repair conforms to the rules of the ASME Code, Section XI.

Type Code Symbol Stamp: Not Applicable

Certificate Of Authorization No.: Not Applicable

Expiration Date: Not Applicable

Prepared By Kuldip Singh - Program Lead Engineer (PLE) — Signed By Kuldip Singh - Program Lead Engineer (PLE)

Date 6/16/05 — Date 6/16/05

CERTIFICATE OF INSERVICE INSPECTION

I, the undersigned, holding a valid commission issued by the National Board of Boiler and Pressure Vessel Inspectors and the State of Washington and employed by Hartford Steam Boiler Of Connecticut of Hartford, Connecticut have inspected the components described in this Owner's Report during the period 3/30/2005 to 6/21/2005 and state to the best of my knowledge and belief, the Owner has performed examinations and taken corrective measures described in this Owner's Report in accordance with the requirements of the ASME Code, Section XI.

By signing this certificate neither the Inspector nor his employer makes any warranty, expressed or implied, concerning the examinations and corrective measures described in this Owner's Report. Furthermore, neither the Inspector nor his employer shall be liable in any manner for any personal injury or property damage or a loss of any kind arising from or connected with this inspection.

Inspector's Signature — Commissions 10155W A, B, N, I National Board, State, and Endorsements

Date 6/21/2005

PLAN No 2-1971

ENERGY NORTHWEST
People·Vision·Solutions

FORM NIS-2 OWNER'S REPORT FOR REPAIRS OR REPLACEMENTS
As Required By The Provisions Of The ASME Code Section XI

Date: 07/02/05
Sheet: 1 Of 1
Unit: Not Applicable

1. **Owner:** Energy Northwest
   Address: Columbia Generating Station, North Power Plant Loop, Richland, Washington, 99352
2. **Plant:** Columbia Generating Station
   Address: Columbia Generating Station, North Power Plant Loop, Richland, Washington, 99352
3. **(a) Work Performed By:** Energy Northwest
   (b) Repair Organization P.O. No, Job No, etc.: Energy Northwest
   (c) Type Code Symbol Stamp: Not Applicable
   (d) Certificate Of Authorization No.: Not Applicable
   (e) Expiration Date: Not Applicable
4. **Identification Of System:** Service Water (SW) System
5. **(a) Applicable Construction Code:** ASME Section III, Code Class 3, 1971 Edition with Winter 1972 Addenda, Code Case: None
   (b) Applicable Edition Of ASME Section XI Utilized For Repairs Or Replacements: 1989 Edition with no Addenda, Code Case: None
6. **Identification Of Components Repaired Or Replaced And Replacement Components**

Name Of Component	Name Of Manufacturer	Manufacturer's Serial No	National Board No	Other I.D.	Year Built	Repaired, Replaced Or Replacement	ASME Code Stamped (Yes Or No) Code Class
SW-V-822B	Wm. Powell	70499-7	N/A	N/A	1977	----------	Yes, Code Class 3
Disc	Wm. Powell	None	N/A	N/A	1977	Replaced	No, Code Class 3*
Disc	Wm. Powell	CM8011B	N/A	N/A	1994	Replacement	Yes, Code Class 3

7. **Description Of Work Performed:** Replaced disc in existing valve SW-V-822B. The replacement work was performed as follows:
   1) Removed existing disc from the valve.
   2) Performed VT-3 visual examination on the existing studs for valve body to bonnet joint. VT-3 visual examination results acceptable.
   3) Performed VT-3 visual examination on the existing nuts for valve body to bonnet joint. VT-3 visual examination results acceptable.
   4) Installed replacement disc Serial No CM8011B.
   5) Reinstalled VT-3 visually examined existing studs for the valve body to bonnet joint.
   6) Reinstalled VT-3 visually examined existing nuts for the valve body to bonnet joint.
   7) Performed VT-2 visual examination during pressure test to confirm pressure boundary integrity of the valve body to bonnet joint. No evidence of leakage during the pressure test.

NOTES -

1) * Existing disc removed from ASME code stamped valve SW-V-822B, Serial No 70499-7.

PLAN No 2-1971

ENERGY NORTHWEST
People · Vision · Solutions

FORM NIS-2 OWNER'S REPORT FOR REPAIRS OR REPLACEMENTS (Back)

8 Tests Conducted: Hydrostatic [ ] Pneumatic [ ] Nominal Operating Pressure [X] [ ]
Test Pressure: 202 Psig Test Temperature: 58° F
Component Design Pressure: 275 Psig Temperature: 250° F

9. Remarks (Applicable Manufacturer's Data Reports to be attached): See attached N-2 Code Data Report for the replacement disc, Serial No CM8011B.

CERTIFICATE OF COMPLIANCE

We certify that the statements made in this Owner's Report are correct and this replacement conforms to the rules of the ASME Code, Section XI.
Type Code Symbol Stamp: Not Applicable
Certificate Of Authorization No.: Not Applicable
Expiration Date: Not Applicable

Prepared By Kuldip Singh - Program Lead Engineer (PLE) Signed By Kuldip Singh - Program Lead Engineer (PLE)

Date 7/7/05 Date 7/7/05

CERTIFICATE OF INSERVICE INSPECTION

I, the undersigned, holding a valid commission issued by the National Board of Boiler and Pressure Vessel Inspectors and the State of Washington and employed by Hartford Steam Boiler Of Connecticut of Hartford, Connecticut have inspected the components described in this Owner's Report during the period 4-11-2005 to 7-6-2005 and state to the best of my knowledge and belief, the Owner has performed examinations and taken corrective measures described in this Owner's Report in accordance with the requirements of the ASME Code, Section XI.
By signing this certificate neither the Inspector nor his employer makes any warranty, expressed or implied, concerning the examinations and corrective measures described in this Owner's Report. Furthermore, neither the Inspector nor his employer shall be liable in any manner for any personal injury or property damage or a loss of any kind arising from or connected with this inspection.

Inspector's Signature Commissions 10655W A, B, N, I
National Board, State, and Endorsements

Date 7/6/2005

PLAN No. 2-1971

FORM N-2 NPT CERTIFICATE HOLDERS' DATA REPORT FOR NUCLEAR PARTS AND APPURTENANCES*

As Required by the Provisions of the ASME Code Rules, Section III, Div. 1

(1)

1. (a) Manufactured by The Wm. Powell Co., 3233 Colerain Ave., Cincinnati, OH 45225
(Name and address of NPT Certificate Holder)

(b) Manufactured for Washington Public Power, P.O. Box 968, Richland, WA 99352
(Name and addres of N Certificate Holder for completed nuclear component)

2. Identification-Certificate Holder's Serial No. Part CM 8011B Nat'l Bd. No. N/A CRN No. N/A

(a) Constructed According to Drawing No. P/N 26-111465-15000-00 Drawing Prepared by The Wm. Powell Co.

(b) Description of Part Inspected 1 - Disc for 3" Figure 3003WE

(c) Applicable ASME Code: Section III, Edition 1971 ; Addenda date Winter 72 ; Case No. N/A Class 3

3. Remarks:
(Brief description of service for which component was designed.)

VALVE SW-V-822B

DISC S/N CM8011B

Chuck Sieb 1/27/05

Item 4-8 inclusive to be completed for single wall vessels, jackets of jacketed vessels, or shells of heat exchangers.

4. Shell: Material _____ (Kind & Spec. No.) T.S. _____ (Min. of range specified) Nom. Thk. __ in. Corr. Allow. __ in. Diam. __ ft. __ in. Length __ ft. __ in.

5. Seams: Long _____ H.T.[1] _____ R.T. _____ Efficiency _____ %

Girth _____ H.T.[1] _____ R.T. _____ No. of Courses _____

6. Heads: (a) Material _____ T.S. _____ (b) Material _____ T.S. _____

	Location (top, bottom, ends)	Thickness	Crown Radius	Knuckle Radius	Elliptical Ratio	Conical Apex Angle	Hemispherical Radius	Flat Diam.	Side to Pressure (convex or concave)
(a)									
(b)									

If removable, bolts used _____ (Material, Spec. No., T.S., Size, Number) Other fastening _____ (Describe or attach sketch)

7. Jacket Closure: _____
(Describe as ogee and weld, bar, etc. If bar, give dimensions, if bolted, describe or sketch)

8. (a) Design Pressure[2] _____ psi at _____ °F (b) Min. Pressure-Test Temp. _____ °F

Items 9 and 10 to be completed for tube sections.

9. Tube Sheets: Stationary: Material _____ (Kind & Spec. No.) Diam. _____ (Subject to pres.) in. Thk. _____ in. Attachment _____ (Welded, bolted)

Floating: Material _____ Diam _____ in. Thk. _____ in. Attachment _____

10. Tubes: Material _____ O.D. _____ in. Thk. _____ in. or gage Number _____ Type _____ (Straight or U)

Items 11-14 inclusive to be completed for inner chambers of jacketed vessels or channels of heat exchangers.

11. Shell: Material _____ (Kind & Spec. No.) T.S. _____ (Min. of range specified) Nom. Thk. __ in. Corr. Allow. __ in. Diam. __ ft. __ in. Length __ ft. __ in.

12. Seams: Long _____ H.T.[1] _____ R.T. _____ Efficiency _____ %

Girth _____ H.T.[1] _____ R.T. _____ No. of Courses _____

13. Heads: (a) Material _____ T.S. _____ (b) Material _____ T.S. _____

	Location	Thickness	Crown Radius	Knuckle Radius	Elliptical Ratio	Conical Apex Angle	Hemispherical Radius	Flat Diam.	Side to Pressure (convex or concave)
(a)	Top, bottom, ends								
(b)	Channel								

If removable, bolts used (a) _____ (b) _____ (c) _____ Other fastening _____ (Describe or attach sketch)

14. (a) Design Pressure[2] _____ psi at _____ °F (b) Min. Pressure-Test Temp. _____ °F

[1] If postweld heat-treated. [2] List other internal or external pressures with coincident temperature when applicable.

*Supplemental sheets in form of lists, sketches, or drawings may be used provided: (1) size is 8½ in. x 11 in.; (2) information in items 1 and 2 of this Data Report is included on each sheet; and (3) each sheet is numbered and number of sheets is recorded in item 3, *Remarks*.

(12/80) This form (E00040) may be obtained from the Order Dept., ASME, 345 E. 47th St., New York, N.Y. 10017

FORM N-2 (Back)

(2)

Items below to be completed for all vessels where applicable. DISC CM 8 01 1 B

15. Safety Valve Outlets: Number_____ Size_____ Location_____

16. Nozzles:

Purpose (inlet, outlet, drain)	Number	Diam. or Size	Type	Material	Thickness	Reinforcement Material	How Attached

17. Inspection Manholes: No._____ Size_____ Location_____
Openings: Handholes: No._____ Size_____ Location_____
Threaded: No._____ Size_____ Location_____

18. Supports: Skirt_____ (Yes or no) Lugs_____ (Number) Legs_____ (Number) Other_____ (Describe) Attached_____ (Where & how)

We certify that the statements made in this report are correct and this vessel part or appurtenance as defined in the Code conforms to the rules of construction of the ASME Code, Section III.

(The applicable Design Specification and Design Report are not the responsibility of the NPT Certificate Holder for parts. An NPT Certificate Holder for appurtenances is responsible for furnishing a separate Design Specification and Design Report if the appurtenance is not included in the component Design Specification and Design Report.)

Date February 24, 19 94 Signed The Wm. Powell Co. (NPT Certificate Holder) By [signature]

Certificate of Authorization Expires 12/23/94 Certificate of Authorization No. 1579

CERTIFICATION OF DESIGN FOR APPURTENANCE (when applicable)

Design information on file at_____

Stress analysis report on file at_____

Design specifications certified by_____ Prof. Eng. State_____ Reg. No._____

Stress analysis report certified by_____ Prof. Eng. State_____ Reg. No._____

CERTIFICATE OF SHOP INSPECTION

I, the undersigned, holding a valid commission issued by the National Board of Boiler and Pressure Vessel Inspectors and the State or Province of Ohio and employed by H.S.B.I & I Co. of Hartford, CT have inspected the part of a pressure vessel described in this Partial Data Report on Feb 24, 19 94, and state that, to the best of my knowledge and belief, the NPT Certificate Holder has constructed this part in accordance with the ASME Code, Section III.

By signing this certificate, neither the Inspector nor his employer makes any warranty, expressed or implied, concerning the part described in this Partial Data Report. Furthermore, neither the Inspector nor his employer shall be liable in any manner for any personal injury or property damage or a loss of any kind arising from or connected with this inspection.

Date 2-24, 19 94

[signature] Inspector's Signature

Commissions NB10904 N, OHIO COMM. National Board, State, Province and No.

SATISFACTORY ✓ UNSATISFACTORY____

[signature] II 3/10/94

RECEIPT INSPECTOR / LEVEL / DATE

PLAN No 2-1972

ENERGY NORTHWEST
People·Vision·Solutions

FORM NIS-2 OWNER'S REPORT FOR REPAIRS OR REPLACEMENTS
As Required By The Provisions Of The ASME Code Section XI

Date: 07/13/05
Sheet: 1 Of 1
Unit: Not Applicable

1. **Owner:** Energy Northwest
   Address: Columbia Generating Station, North Power Plant Loop, Richland, Washington, 99352
2. **Plant:** Columbia Generating Station
   Address: Columbia Generating Station, North Power Plant Loop, Richland, Washington, 99352
3. **(a) Work Performed By:** Energy Northwest
   (b) Repair Organization P.O. No, Job No, etc.: Energy Northwest
   (c) Type Code Symbol Stamp: Not Applicable
   (d) Certificate Of Authorization No.: Not Applicable
   (e) Expiration Date: Not Applicable
4. **Identification Of System:** Residual Heat Removal (RHR) System
5. **(a) Applicable Construction Code:** ASME Section III, Code Class 2, 1971 Edition with Winter 1973 Addenda, Code Case: None
   (b) Applicable Edition Of ASME Section XI Utilized For Repairs Or Replacements: 1989 Edition with no Addenda, Code Case: None
6. **Identification Of Components Repaired Or Replaced And Replacement Components**

Name Of Component	Name Of Manufacturer	Manufacturer's Serial No	National Board No	Other I.D.	Year Built	Repaired, Replaced Or Replacement	ASME Code Stamped (Yes Or No) Code Class
RHR(1)-2B	WPPSS*	RHR(1)-2B-P1	N/A	N/A	1984	----------	Yes, Code Class 2
RHR(4)-1B	WPPSS*	RHR(4)-1B-P1	N/A	N/A	1983	----------	Yes, Code Class 2
RHR-RV-25B	Lonergan	128261-1-1	N/A	N/A	1993	Replaced	Yes, Code Class 2
RHR-RV-25B	Crosby**	N99782-00-0001	N/A	N/A	2004	Replacement	Yes, Code Class 2

7. **Description Of Work Performed:** Replaced existing relief valve RHR-V-25B. The replacement work was performed as follows:
   1) Removed existing relief valve RHR-RV-25B, Serial No 128261-1-1.
   2) Performed VT-3 visual examination on the existing studs for the relief valve outlet joint. VT-3 visual examination results acceptable.
   3) Performed VT-3 visual examination on the existing nuts for the relief valve outlet joint. VT-3 visual examination results acceptable.
   4) Installed replacement relief valve RHR-RV-25B, Serial No N99782-00-0001.
   5) Reinstalled VT-3 visually examined existing studs and nuts for the relief valve outlet joint.
   6) Performed VT-2 visual examination during pressure test to confirm pressure boundary integrity of the relief valve outlet bolted flanged joint. No evidence of leakage during the pressure test.

NOTES -

1) * Company name changed from Washington Public Power Supply System (WPPSS) to Energy Northwest in 1999.
2) ** Anderson Greenwood Crosby
3) The existing ASME Code Stamped piping system applicable to the replacement valve RHR-RV-25B, Serial No N99782-00-0001 inlet side is Residual Heat Removal (RHR) piping system RHR(1)-2B-P1. This piping system is certified to comply with ASME Section III, Code Class 2, 1971 Edition with Winter 1973 Addenda requirements.
4) The existing ASME Code Stamped piping system applicable to the replacement valve RHR-RV-25B, Serial No N99782-00-0001 outlet side is Residual Heat Removal (RHR) piping system RHR(4)-1B-P1. This piping system is certified to comply with ASME Section III, Code Class 2, 1971 Edition with Winter 1973 Addenda requirements.
5) The replacement valve RHR-RV-25B, Serial No N99782-00-0001 is certified to comply with ASME Section III, Code Class 2, 1995 Edition with 1996 Addenda requirements.

PLAN No 2-1972

ENERGY NORTHWEST
People·Vision·Solutions

FORM NIS-2 OWNER'S REPORT FOR REPAIRS OR REPLACEMENTS (Back)

8 Tests Conducted: Hydrostatic ☐ *Pneumatic* ☐ *Nominal Operating Pressure* ☐ *Other* ☒

Test Pressure: 38.88 Psig *Test Temperature:* 76° F

Component Design Pressure: 125 Psig *Temperature:* 480° F

9. Remarks (Applicable Manufacturer's Data Reports to be attached): 1) See attached NV-1 Code Data Report for the replacement relief valve RHR-RV-25B, Serial No N99782-00-0001.2) * VT-2 visual examination to confirm pressure boundary integrity of the replacement relief valve RHR-RV-25B, Serial No N99782-00-0001 outlet bolted flanged joint was performed during 10CFR50, Appendix J Local Leak Rate Test (LLRT). 3) Test pressure of 38.88 Psig and test temperature of 76° F is for relief valve outlet joint. Component design pressure of 125 Psig and design temperature of 480° F is for the relief valve outlet piping.

CERTIFICATE OF COMPLIANCE

We certify that the statements made in this Owner's Report are correct and this replacement *conforms to the rules of the ASME Code, Section XI.*

Type Code Symbol Stamp: Not Applicable

Certificate Of Authorization No.: Not Applicable

Expiration Date: Not Applicable

Prepared By Kuldip Singh - Program Lead Engineer (PLE) *Signed By* Kuldip Singh - Program Lead Engineer (PLE)

Date 7/14/05 *Date* 7/14/05

CERTIFICATE OF INSERVICE INSPECTION

I, the undersigned, holding a valid commission issued by the National Board of Boiler and Pressure Vessel Inspectors and the State of Washington *and employed by* Hartford Steam Boiler Of Connecticut of Hartford, Connecticut *have inspected the components described in this Owner's Report during the period* 2-26-2005 *to* 7-18-2005 *and state to the best of my knowledge and belief, the Owner has performed examinations and taken corrective measures described in this Owner's Report in accordance with the requirements of the ASME Code, Section XI.*

By signing this certificate neither the Inspector nor his employer makes any warranty, expressed or implied, concerning the examinations and corrective measures described in this Owner's Report. Furthermore, neither the Inspector nor his employer shall be liable in any manner for any personal injury or property damage or a loss of any kind arising from or connected with this inspection.

Inspector's Signature *Commissions* 10655 W A, B, N, I
National Board, State, and Endorsements

Date 7-18-2005

PLAN No. 2-1972

Q.C.-44E

Sheet 1 of 2

* Corrected report to add non-pressure retaining parts listed under remarks.

JC 1-11-05

FORM NV-1, CERTIFICATE HOLDERS' DATA REPORT FOR PRESSURE OR VACUUM RELIEF VALVES

As required by the Provisions of the ASME Code, Section III, Division 1

1. Manufactured and certified by Anderson Greenwood Crosby, 43 Kendrick St., Wrentham, MA 02093
(Name and Address of NV Certificate Holder)

Crosby Factory Order No. U835820000 Customer Order No. 00317009

2. Manufactured for ENERGY NORTHWEST
(Name and Address of Purchaser)

3. Location of Installation COLUMBIA GEN. STATION
(Name and Address)

4. Valve 9511882A (Model No./Series No.) Orifice size 0.328 (in.) Nom. Inlet size 1 (in.) Outlet size 2 (in.)

5. ASME Code, Section III, Division 1: 1995 (Edition) 1996 (Addenda Date) 2 (Class) -- (Code Case No.)

6. Type SAFETY RELIEF SPRING (Spring, Pilot or Power Operated) Valve I.D./Tag No. RHR-RV-25B

488 (Set Pressure, psig) 20% OF S.P. (Blowdown, psi) 148 (Rated Relieving Temperature) 1100 (Hydro Test psig, Inlet) at 70 °F

7. Ident. N99782-00-0001 (Cert. Holder's serial no.) N/A (CRN) DS-C-99782REV. A (Drawing No.) --- (Nat'l Bd. No.) 2004 (Yr. Built)

8. Control Ring Settings N/A

9. Pressure Retaining Items:

	Serial No. or Identification	Material Spec. Including Type or Grade	Tensile Strength (psi)
Body			
Bonnet			
Support Rods	---	---	---
Nozzle			
Disc Insert	N99595-NGDH	ASME SA479 TYPE 316	75,000
	N95899-NGCZ		
Spring Washer	N95899-NGCL	ASME SA193 GR. B6	110,000
Adjusting Bolt	N95900-02-0920	ASME SA193 GR. B6	110,000
Spindle	N95898-15-0941	ASME SA193 GR. B6	110,000
Spring	NX5385-0014	ASTM A313 TYPE 316	n/a
Bolting	---	---	---
Other Items			
BASE	N99563-32-0008	ASME SA479 TYPE 316	75,000
LAP JOINT STUB END	N99564-32-0008	ASME SA182 GR. F316	70,000
LAP JOINT FLANGE	N96820-56-0083	ASME SA182 GR. F316	70,000
CYLINDER	N99593-31-0003	ASME SA105	70,000
WELD NECK FLANGE	N99592-31-0001	ASME SA105	70,000

Form NV-1 (Back) Certificate Holder's Serial No. N99782-00-0001

10. Relieving capacity 49 Gpm Water @ 70 DEG.F @ 10 overpressure as certified by the National Board 09/12/00
(steam or fluid, lb/hr) (date)

* 11. Remarks: Pipe Cap AGC p/n 156223 CAJON p/n SS-2-CP - Material ASME SA182 Gr. F316
Male Connector AGC p/n 156216 CAJON p/n SS-2-TSW-1-2 Material ASME SA182 Gr.F316

The above material was procured in accordance with the 'small products' provisions of ASME Section III, Sub-article NC/ND-2600. → FT 11-JAN-05

CERTIFICATE OF DESIGN

Design Specification certified by Jack R. Cole Jr. PE State WA Reg. No. 0020653

Design Report certified by Charles R. Dowd PE State MA Reg. No. 39103

CERTIFICATE OF COMPLIANCE

We certify that the statements made in this report are correct and that this valve conforms to the rules for construction of the ASME Code, Section III, Division 1. * Date: 11-JAN-05 Signed D.E. Tu

NV Certificate of Authorization No. N-1878 Expires 31-Dec-04

Date 25-OCT-04 Name Anderson Greenwood Crosby Wrentham, MA Signed D.E. Tu
(NV Certificate Holder) (Authorized Representative)

CERTIFICATE OF INSPECTION

I, the undersigned, holding a valid commission issued by the National Board of Boiler and Pressure Vessel Inspectors and the State ~~or Province~~ of MA and employed by HSB-CT. of Hartford, CT have inspected the valve described in this Data Report on 10-7, 2004 and state that to the best of my knowledge and belief, the N Certificate Holder has constructed this valve in accordance with the ASME Code, Section III, Division 1.

By signing this certificate, neither the Inspector nor his employer makes any warrant, expressed or implied, concerning the component described in this Data Report. Furthermore, neither the Inspector nor his employer shall be liable in any manner for any personal injury or property damage or a loss of any kind arising from or connected with this inspection.

Date OCT 25 '04 Signed [illegible] Commissions MA-1420 A, N, I
(Authorized Inspector) (Nat'l. Bd. (incl. Endorsements) and state or prov. and no.)

* Date: 1-11-05 Signed: [illegible] MA-1400 A, N, E

1. 2

PLAN No 2-1973

ENERGY NORTHWEST
People·Vision·Solutions

FORM NIS-2 OWNER'S REPORT FOR REPAIRS OR REPLACEMENTS
As Required By The Provisions Of The ASME Code Section XI

Date: 07/13/05
Sheet: 1 Of 1
Unit: Not Applicable

1. **Owner:** Energy Northwest
   Address: Columbia Generating Station, North Power Plant Loop, Richland, Washington, 99352
2. **Plant:** Columbia Generating Station
   Address: Columbia Generating Station, North Power Plant Loop, Richland, Washington, 99352
3. **(a) Work Performed By:** Energy Northwest
   (b) Repair Organization P.O. No, Job No, etc.: Energy Northwest
   (c) Type Code Symbol Stamp: Not Applicable
   (d) Certificate Of Authorization No.: Not Applicable
   (e) Expiration Date: Not Applicable
4. **Identification Of System:** Residual Heat Removal (RHR) System
5. **(a) Applicable Construction Code:** ASME Section III, Code Class 2, 1971 Edition with Winter 1973 Addenda, Code Case: None
   (b) Applicable Edition Of ASME Section XI Utilized For Repairs Or Replacements: 1989 Edition with no Addenda, Code Case: None
6. **Identification Of Components Repaired Or Replaced And Replacement Components**

Name Of Component	Name Of Manufacturer	Manufacturer's Serial No	National Board No	Other I.D.	Year Built	Repaired, Replaced Or Replacement	ASME Code Stamped (Yes Or No) Code Class
RHR(1)-2C	WPPSS*	RHR(1)-2C-P1	N/A	N/A	1983	----------	Yes, Code Class 2
RHR(4)-1C	WPPSS*	RHR(4)-1C-P1	N/A	N/A	1983	----------	Yes, Code Class 2
RHR-RV-25C	Lonergan	509258-75-1	N/A	N/A	1982	Replaced	Yes, Code Class 2
RHR-RV-25C	Crosby**	N99783-00-0001	N/A	N/A	2004	Replacement	Yes, Code Class 2

7. **Description Of Work Performed:** Replaced existing relief valve RHR-V-25C. The replacement work was performed as follows:
   1) Removed existing relief valve RHR-RV-25C, Serial No 509258-75-1.
   2) Performed VT-3 visual examination on the existing studs for the relief valve outlet joint. VT-3 visual examination results acceptable.
   3) Performed VT-3 visual examination on the existing nuts for the relief valve outlet joint. VT-3 visual examination results acceptable.
   4) Installed replacement relief valve RHR-RV-25C, Serial No N99783-00-0001.
   5) Reinstalled VT-3 visually examined existing studs and nuts for the relief valve outlet joint.
   6) 1st pressure test - Performed VT-2 visual examination during pressure test to confirm pressure boundary integrity of the relief valve outlet bolted flanged joint. Leakage was observed during the pressure test and was evaluated to be not acceptable. 2nd pressure test - Performed VT-2 visual examination during pressure test to confirm pressure boundary integrity of the relief valve outlet bolted flanged joint. No evidence of leakage during the pressure test.

NOTES -

1) * Company name changed from Washington Public Power Supply System (WPPSS) to Energy Northwest in 1999.
2) ** Anderson Greenwood Crosby
3) The existing ASME Code Stamped piping system applicable to the replacement valve RHR-RV-25C, Serial No N99783-00-0001 inlet side is Residual Heat Removal (RHR) piping system RHR(1)-2C-P1. This piping system is certified to comply with ASME Section III, Code Class 2, 1971 Edition with Winter 1973 Addenda requirements.
4) The existing ASME Code Stamped piping system applicable to the replacement valve RHR-RV-25C, Serial No N99783-00-0001 outlet side is Residual Heat Removal (RHR) piping system RHR(4)-1C-P1. This piping system is certified to comply with ASME Section III, Code Class 2, 1971 Edition with Winter 1973 Addenda requirements.
5) The replacement valve RHR-RV-25C, Serial No N99782-00-0001 is certified to comply with ASME Section III, Code Class 2, 1995 Edition with 1996 Addenda requirements.

PLAN No 2-1973

ENERGY NORTHWEST
People·Vision·Solutions

FORM NIS-2 OWNER'S REPORT FOR REPAIRS OR REPLACEMENTS (Back)

8 Tests Conducted: Hydrostatic [ ] **Pneumatic** [ ] **Nominal Operating Pressure** [ ] **Other** [•]

Test Pressure: 38.7 Psig **Test Temperature:** 76.2° F

Component Design Pressure: 125 Psig **Temperature:** 480° F

9. Remarks (Applicable Manufacturer's Data Reports to be attached): 1) See attached NV-1 Code Data Report for the replacement relief valve RHR-RV-25C, Serial No N99783-00-0001.2) * VT-2 visual examination to confirm pressure boundary integrity of the replacement relief valve RHR-RV-25C, Serial No N99782-00-0001 outlet bolted flanged joint was performed during 10CFR50, Appendix J Local Leak Rate Test (LLRT). 3) Test pressure of 38.7 Psig and test temperature of 76.2° F is for relief valve outlet joint. Component design pressure of 125 Psig and design temperature of 480° F is for the relief valve outlet piping.

CERTIFICATE OF COMPLIANCE

We certify that the statements made in this Owner's Report are correct and this replacement *conforms to the rules of the ASME Code, Section XI.*

Type Code Symbol Stamp: Not Applicable

Certificate Of Authorization No.: Not Applicable

Expiration Date: Not Applicable

Prepared By Kuldip Singh - Program Lead Engineer (PLE) **Signed By** Kuldip Singh - Program Lead Engineer (PLE)

Date 7/14/05 **Date** 7/14/05

CERTIFICATE OF INSERVICE INSPECTION

I, the undersigned, holding a valid commission issued by the National Board of Boiler and Pressure Vessel Inspectors and the State of Washington *and employed by* Hartford Steam Boiler Of Connecticut of Hartford, Connecticut *have inspected the components described in this Owner's Report during the period* 4-26-2005 *to* 7-14-2005 *and state to the best of my knowledge and belief, the Owner has performed examinations and taken corrective measures described in this Owner's Report in accordance with the requirements of the ASME Code, Section XI.*

By signing this certificate neither the Inspector nor his employer makes any warranty, expressed or implied, concerning the examinations and corrective measures described in this Owner's Report. Furthermore, neither the Inspector nor his employer shall be liable in any manner for any personal injury or property damage or a loss of any kind arising from or connected with this inspection.

Inspector's Signature **Commissions** 10655W A, B, N, I National Board, State, and Endorsements

Date 7-14-2005

PCMN NO. 2_1973

Q.C.-44E

Sheet 1 of 2

* Corrected report to add non-pressure retaining parts listed under remarks.

FORM NV-1, CERTIFICATE HOLDERS' DATA REPORT FOR PRESSURE OR VACUUM RELIEF VALVES

As required by the Provisions of the ASME Code, Section III, Division 1

1. Manufactured and certified by Anderson Greenwood Crosby, 43 Kendrick St., Wrentham, MA 02093
(Name and Address of NV Certificate Holder)

Crosby Factory Order No. U835820000 Customer Order No. 00317009

2. Manufactured for ENERGY NORTHWEST
(Name and Address of Purchaser)

3. Location of Installation COLUMBIA GEN. STATION
(Name and Address)

4. Valve 9511882A (Model No./Series No.) Orifice size 0.328 (in.) Nom. Inlet size 1 (in.) Outlet size 2 (in.)

5. ASME Code, Section III, Division 1: 1995 (Edition) 1996 (Addenda Date) 2 (Class) -- (Code Case No.)

6. Type SAFETY RELIEF SPRING (Spring, Pilot or Power Operated) Valve I.D./Tag No. RHR-RV-25C

493 (Set Pressure, psig) 20% OF S.P. (Blowdown, psi) 148 (Rated Relieving Temperature) 1100 (Hydro Test psig, Inlet) at 70 °F

7. Ident. N99783-00-0001 (Cert. Holder's serial no.) N/A (CRN) DS-C-99783REV. A (Drawing No.) --- (Nat'l Bd. No.) 2004 (Yr. Built)

8. Control Ring Settings N/A

9. Pressure Retaining Items:

	Serial No. or Identification	Material Spec. Including Type or Grade	Tensile Strength (psi)
Body			
Bonnet			
Support Rods	---	---	---
Nozzle			
Disc Insert	N99595-NGDK	ASME SA479 TYPE 316	75,000
	N95899-NGDA		
Spring Washer	N95899-NGDB	ASME SA193 GR. B6	110,000
Adjusting Bolt	N95900-02-0926	ASME SA193 GR. B6	110,000
Spindle	N95898-15-0933	ASME SA193 GR. B6	110,000
Spring	NX5385-0012	ASTM A313 TYPE 316	n/a
Bolting	---	---	---
Other Items			
BASE	N99563-32-0004	ASME SA479 TYPE 316	75,000
LAP JOINT STUB END	N99564-32-0004	ASME SA182 GR. F316	70,000
LAP JOINT FLANGE	N96820-55-0079	ASME SA182 GR. F316	70,000
CYLINDER	N99593-32-0008	ASME SA105	70,000
WELD NECK FLANGE	N99592-31-0006	ASME SA105	70,000

7.1

Form NV-1 (Back) Certificate Holder's Serial No. N99783-00-0001

10. Relieving capacity 49 Gpm Water @ 70 DEG.F @ 10 overpressure as certified by the National Board 09/12/00
(steam or fluid, lb/hr) (date)

* 11. Remarks: Pipe Cap AGC p/n 156223 CAJON p/n SS-2-CP - Material ASME SA182 Gr.F316
Male Connector AGC p/n 156216 CAJON p/n SS-2-TSW-1-2 Material ASME SA182 Gr.F316

The above material was procured in accordance with the 'small products' provisions of ASME Section III, Sub-article NC/ND-2600. DET-11-JAN-05

CERTIFICATE OF DESIGN

Design Specification certified by Jack R. Cole Jr. PE State WA Reg. No. 0020653

Design Report certified by Charles R. Dowd PE State MA Reg. No. 39103

CERTIFICATE OF COMPLIANCE

We certify that the statements made in this report are correct and that this valve conforms to the rules for construction of the ASME Code, Section III, Division 1. * Date: 11-JAN-05 Signed D.E. Tilt

NV Certificate of Authorization No. N-1878 Expires 31-Dec-04

Date 22-OCT-04 Name Anderson Greenwood Crosby Wrentham, MA (NV Certificate Holder) Signed D.E. Tilt (Authorized Representative)

CERTIFICATE OF INSPECTION

I, the undersigned, holding a valid commission issued by the National Board of Boiler and Pressure Vessel Inspectors and the State ~~or Province~~ of MA and employed by HSB-CT. of Hartford, CT have inspected the valve described in this Data Report on 10-7, 2004 and state that to the best of my knowledge and belief, the N Certificate Holder has constructed this valve in accordance with the ASME Code, Section III, Division 1.

By signing this certificate, neither the Inspector nor his employer makes any warrant, expressed or implied, concerning the component described in this Data Report. Furthermore, neither the Inspector nor his employer shall be liable in any manner for any personal injury or property damage or a loss of any kind arising from or connected with this inspection.

Date OCT 25, '04 Signed (Authorized Inspector) Commissions MA-1420 A, N, I (Nat'l. Bd. (incl. Endorsements) and state or prov. and no.)

* Date: 11-05 Signed: MA 1420 A,N,I

1.2

PLAN No 2-1977

ENERGY NORTHWEST
People·Vision·Solutions

FORM NIS-2 OWNER'S REPORT FOR REPAIRS OR REPLACEMENTS
As Required By The Provisions Of The ASME Code Section XI

1. Owner: Energy Northwest
Address: Columbia Generating Station, North Power Plant Loop, Richland, Washington, 99352
2. Plant: Columbia Generating Station
Address: Columbia Generating Station, North Power Plant Loop, Richland, Washington, 99352

Date: 07/14/05
Sheet: 1 Of 1
Unit: Not Applicable

3. (a) Work Performed By: Energy Northwest
(b) Repair Organization P.O. No, Job No, etc.: Energy Northwest
(c) Type Code Symbol Stamp: Not Applicable
(d) Certificate Of Authorization No.: Not Applicable
(e) Expiration Date: Not Applicable
4. Identification Of System: Service Water (SW) System
5. (a) Applicable Construction Code: ASME Section III, Code Class 3, 1971 Edition with Winter 1973 Addenda, Code Case: None
(b) Applicable Edition Of ASME Section XI Utilized For Repairs Or Replacements: 1989 Edition with no Addenda, Code Case: None
6. Identification Of Components Repaired Or Replaced And Replacement Components

Name Of Component	Name Of Manufacturer	Manufacturer's Serial No	National Board No	Other I.D.	Year Built	Repaired, Replaced Or Replacement	ASME Code Stamped (Yes Or No) Code Class
SW(21)-2	WPPSS*	SW(21)-2-P1	N/A	N/A	1983	----------	Yes, Code Class 3

7. Description Of Work Performed: Cut and rewelded existing weld for flow element SW-FE-41. The repair work was performed as follows:

1) Cut/ground existing weld.
2) Prepped cut/ground surfaces on as needed basis for rewelding.
3) Reinstalled pipe nipple.
4) Made required weld.
5) Performed visual examination on the final weld. Visual examination results acceptable.

NOTES -

1) * Company name changed from Washington Public Power Supply System (WPPSS) to Energy Northwest (EN) in 1999.

PLAN No 2-1977

ENERGY NORTHWEST
People·Vision·Solutions

FORM NIS-2 OWNER'S REPORT FOR REPAIRS OR REPLACEMENTS (Back)

8 Tests Conducted: Hydrostatic [ ] Pneumatic [ ] Nominal Operating Pressure [ ] None [X]
Test Pressure: Psig Test Temperature: °F
Component Design Pressure: Psig Temperature: °F

9. Remarks (Applicable Manufacturer's Data Reports to be attached): None

CERTIFICATE OF COMPLIANCE

We certify that the statements made in this Owner's Report are correct and this repair conforms to the rules of the ASME Code, Section XI.
Type Code Symbol Stamp: Not Applicable
Certificate Of Authorization No.: Not Applicable
Expiration Date: Not Applicable

Prepared By Kuldip Singh - Program Lead Engineer (PLE) Signed By Kuldip Singh - Program Lead Engineer (PLE)

Date 7/14/05 Date 7/14/05

CERTIFICATE OF INSERVICE INSPECTION

I, the undersigned, holding a valid commission issued by the National Board of Boiler and Pressure Vessel Inspectors and the State of Washington and employed by Hartford Steam Boiler Of Connecticut of Hartford, Connecticut have inspected the components described in this Owner's Report during the period 4/26/2005 to 7-18-2005 and state to the best of my knowledge and belief, the Owner has performed examinations and taken corrective measures described in this Owner's Report in accordance with the requirements of the ASME Code, Section XI.
By signing this certificate neither the Inspector nor his employer makes any warranty, expressed or implied, concerning the examinations and corrective measures described in this Owner's Report. Furthermore, neither the Inspector nor his employer shall be liable in any manner for any personal injury or property damage or a loss of any kind arising from or connected with this inspection.

Inspector's Signature Commissions 10655W A, B, N, I
National Board, State, and Endorsements

Date 7-18-2005

PLAN No 2-1982

ENERGY NORTHWEST
People·Vision·Solutions

FORM NIS-2 OWNER'S REPORT FOR REPAIRS OR REPLACEMENTS
As Required By The Provisions Of The ASME Code Section XI

Date: 07/19/05
Sheet: 1 Of 1
Unit: Not Applicable

1. **Owner:** Energy Northwest
   Address: Columbia Generating Station, North Power Plant Loop, Richland, Washington, 99352
2. **Plant:** Columbia Generating Station
   Address: Columbia Generating Station, North Power Plant Loop, Richland, Washington, 99352
3. (a) **Work Performed By:** Energy Northwest
   (b) **Repair Organization P.O. No, Job No, etc.:** Energy Northwest
   (c) **Type Code Symbol Stamp:** Not Applicable
   (d) **Certificate Of Authorization No.:** Not Applicable
   (e) **Expiration Date:** Not Applicable
4. **Identification Of System:** Service Water (SW) System
5. (a) **Applicable Construction Code:** ASME Section III, Code Class 3, 1971 Edition with Winter 1973 Addenda, Code Case: None
   (b) **Applicable Edition Of ASME Section XI Utilized For Repairs Or Replacements:** 1989 Edition with no Addenda, Code Case: N-416-1
6. **Identification Of Components Repaired Or Replaced And Replacement Components**

Name Of Component	Name Of Manufacturer	Manufacturer's Serial No	National Board No	Other I.D.	Year Built	Repaired, Replaced Or Replacement	ASME Code Stamped (Yes Or No) Code Class
SW(1)-2UG	WPPSS*	SW(1)-2UG-P1	N/A	N/A	1983	----------	Yes, Code Class 3

7. **Description Of Work Performed:** Repaired the ID cavitated pitted surface of the flange and elbow down stream of valve SW-V-2A. The repair work was performed as follows:
   1) Prepped surfaces by breaking sharp edges.
   2) Performed UT thickness check for ground surfaces.
   3) Mapped the surfaces to be weld repaired.
   4) Performed magnetic particle (MT) examination on prepped surfaces. Magnetic particle (MT) examination results acceptable.
   5) Weld repaired (weld build up) the surfaces.
   6) Performed visual examination on the final weld repaired surfaces. Visual examination results acceptable.
   7) Ground/blended the weld repaired surfaces.
   8) Performed magnetic particle (MT) examination on blended surfaces. Magnetic particle (MT) examination results acceptable.
   9) Performed VT-3 visual examination on the existing studs and nuts for valve SW-V-2A inlet bolted joint. VT-3 visual examination results acceptable.
   10) Performed VT-3 visual examination on the existing studs and nuts for valve SW-V-2A outlet bolted joint. VT-3 visual examination results acceptable.
   11) Reinstalled VT-3 visually examined existing studs and nuts for valve SW-V-2A inlet and outlet bolted joints.
   12) Performed VT-2 visual examination during pressure test to confirm pressure boundary integrity of the joints. No evidence of leakage during the pressure test.

NOTES -

1) * Company name changed from Washington Public Power Supply System (WPPSS) to Energy Northwest (EN) in 1999.
2) The magnetic particle (MT) examination on the final surfaces was performed in accordance with the requirements of ASME Section III, Code Class 3, 1992 Edition with no Addenda to satisfy the requirements outlined in Code Case N-416-1.
3) The VT-2 visual examination during pressure test to confirm pressure boundary integrity of the joints was performed in accordance with the requirements of ASME Section XI, 1992 Edition with no Addenda to satisfy the requirements outlined in Code Case N-416-1.

PLAN No 2-1982

ENERGY NORTHWEST
People·Vision·Solutions

FORM NIS-2 OWNER'S REPORT FOR REPAIRS OR REPLACEMENTS (Back)

8 Tests Conducted: Hydrostatic [ ] Pneumatic [ ] Nominal Operating Pressure [X] [ ]

Test Pressure: 215 Psig
Component Design Pressure: 309 Psig
Test Temperature: 63° F
Temperature: 150° F

9. Remarks (Applicable Manufacturer's Data Reports to be attached): None

CERTIFICATE OF COMPLIANCE

We certify that the statements made in this Owner's Report are correct and this repair conforms to the rules of the ASME Code, Section XI.
Type Code Symbol Stamp: Not Applicable
Certificate Of Authorization No.: Not Applicable
Expiration Date: Not Applicable

Prepared By Kuldip Singh
Kuldip Singh - Program Lead Engineer (PLE)
Date 7/19/05

Signed By Kuldip Singh
Kuldip Singh - Program Lead Engineer (PLE)
Date 7/19/05

CERTIFICATE OF INSERVICE INSPECTION

I, the undersigned, holding a valid commission issued by the National Board of Boiler and Pressure Vessel Inspectors and the State of Washington and employed by Hartford Steam Boiler Of Connecticut of Hartford, Connecticut have inspected the components described in this Owner's Report during the period 5-10-2005 to 7-21-2005 and state to the best of my knowledge and belief, the Owner has performed examinations and taken corrective measures described in this Owner's Report in accordance with the requirements of the ASME Code, Section XI.
By signing this certificate neither the Inspector nor his employer makes any warranty, expressed or implied, concerning the examinations and corrective measures described in this Owner's Report. Furthermore, neither the Inspector nor his employer shall be liable in any manner for any personal injury or property damage or a loss of any kind arising from or connected with this inspection.

Inspector's Signature

Commissions 10655W A, B, U, I
National Board, State, and Endorsements

Date 7-21-2005

PLAN No 2-1983

ENERGY NORTHWEST
People·Vision·Solutions

FORM NIS-2 OWNER'S REPORT FOR REPAIRS OR REPLACEMENTS
As Required By The Provisions Of The ASME Code Section XI

Date: 07/19/05
Sheet: 1 Of 1
Unit: Not Applicable

1. Owner: Energy Northwest
Address: Columbia Generating Station, North Power Plant Loop, Richland, Washington, 99352
2. Plant: Columbia Generating Station
Address: Columbia Generating Station, North Power Plant Loop, Richland, Washington, 99352
3. (a) Work Performed By: Energy Northwest
(b) Repair Organization P.O. No, Job No, etc.: Energy Northwest
(c) Type Code Symbol Stamp: Not Applicable
(d) Certificate Of Authorization No.: Not Applicable
(e) Expiration Date: Not Applicable
4. Identification Of System: Service Water (SW) System
5. (a) Applicable Construction Code: ASME Section III, Code Class 3, 1971 Edition with Winter 1973 Addenda, Code Case: None
(b) Applicable Edition Of ASME Section XI Utilized For Repairs Or Replacements: 1989 Edition with no Addenda, Code Case: N-416-1
6. Identification Of Components Repaired Or Replaced And Replacement Components

Name Of Component	Name Of Manufacturer	Manufacturer's Serial No	National Board No	Other I.D.	Year Built	Repaired, Replaced Or Replacement	ASME Code Stamped (Yes Or No) Code Class
SW(2)-2-UG	WPPSS*	SW(2)-2-UG-P1	N/A	N/A	1983	----------	Yes, Code Class 3

7. Description Of Work Performed: Repaired the ID cavitated pitted surface of the flange and elbow down stream of valve SW-V-2B. The repair work was performed as follows:

1) Prepped surfaces by breaking sharp edges.
2) Performed UT thickness check for ground surfaces.
3) Mapped the surfaces to be weld repaired.
4) Performed magnetic particle (MT) examination on prepped surfaces. Magnetic particle (MT) examination results acceptable.
5) Weld repaired (weld build up) the surfaces.
6) Performed visual examination on the final weld repaired surfaces. Visual examination results acceptable.
7) Ground/blended the weld repaired surfaces.
8) Performed magnetic particle (MT) examination on blended surfaces. Magnetic particle (MT) examination results acceptable.
9) Performed VT-3 visual examination on the existing studs and nuts for valve SW-V-2B inlet bolted joint. VT-3 visual examination results acceptable.
10) Performed VT-3 visual examination on the existing studs and nuts for valve SW-V-2B outlet bolted joint. VT-3 visual examination results acceptable.
11) Reinstalled VT-3 visually examined existing studs and nuts for valve SW-V-2B inlet and outlet bolted joints.
12) Performed VT-2 visual examination during pressure test to confirm pressure boundary integrity of the joints. No evidence of leakage during the pressure test.

NOTES -

1) * Company name changed from Washington Public Power Supply System (WPPSS) to Energy Northwest (EN) in 1999.
2) The magnetic particle (MT) examination on the final surfaces was performed in accordance with the requirements of ASME Section III, Code Class 3, 1992 Edition with no Addenda to satisfy the requirements outlined in Code Case N-416-1.
3) The VT-2 visual examination during pressure test to confirm pressure boundary integrity of the joints was performed in accordance with the requirements of ASME Section XI, 1992 Edition with no Addenda to satisfy the requirements outlined in Code Case N-416-1.

PLAN No 2-1983

ENERGY NORTHWEST
People·Vision·Solutions

FORM NIS-2 OWNER'S REPORT FOR REPAIRS OR REPLACEMENTS (Back)

8 Tests Conducted: Hydrostatic [ ] **Pneumatic** [ ] **Nominal Operating Pressure** [X] [ ]

Test Pressure: 204 Psig **Test Temperature:** 58° F

Component Design Pressure: 309 Psig **Temperature:** 150° F

9. Remarks (Applicable Manufacturer's Data Reports to be attached): None

CERTIFICATE OF COMPLIANCE

We certify that the statements made in this Owner's Report are correct and this repair *conforms to the rules of the ASME Code, Section XI.*

Type Code Symbol Stamp: Not Applicable

Certificate Of Authorization No.: Not Applicable

Expiration Date: Not Applicable

Prepared By Kuldip Singh - Program Lead Engineer (PLE) **Signed By** Kuldip Singh - Program Lead Engineer (PLE)

Date 7/19/05 **Date** 7/19/05

CERTIFICATE OF INSERVICE INSPECTION

I, the undersigned, holding a valid commission issued by the National Board of Boiler and Pressure Vessel Inspectors and the State of Washington *and employed by* Hartford Steam Boiler Of Connecticut of Hartford, Connecticut *have inspected the components described in this Owner's Report during the period* 5-17-2005 *to* 7-21-2005 *and state to the best of my knowledge and belief, the Owner has performed examinations and taken corrective measures described in this Owner's Report in accordance with the requirements of the ASME Code, Section XI.*

By signing this certificate neither the Inspector nor his employer makes any warranty, expressed or implied, concerning the examinations and corrective measures described in this Owner's Report. Furthermore, neither the Inspector nor his employer shall be liable in any manner for any personal injury or property damage or a loss of any kind arising from or connected with this inspection.

Inspector's Signature **Commissions** 10655W A, B, N, I
National Board, State, and Endorsements

Date 7-21-2005

PLAN No 2-1985

ENERGY NORTHWEST
People·Vision·Solutions

FORM NIS-2 OWNER'S REPORT FOR REPAIRS OR REPLACEMENTS
As Required By The Provisions Of The ASME Code Section XI

1. Owner: Energy Northwest
Address: Columbia Generating Station, North Power Plant Loop, Richland, Washington, 99352
2. Plant: Columbia Generating Station
Address: Columbia Generating Station, North Power Plant Loop, Richland, Washington, 99352

Date: 06/10/05
Sheet: 1 Of 1
Unit: Not Applicable

3. (a) Work Performed By: Energy Northwest
(b) Repair Organization P.O. No, Job No, etc.: Energy Northwest
(c) Type Code Symbol Stamp: Not Applicable
(d) Certificate Of Authorization No.: Not Applicable
(e) Expiration Date: Not Applicable
4. Identification Of System: Reactor Pressure Vessel (RPV) N-1A Code Data Report And Appurtenances N-5 Code Data Report
5. (a) Applicable Construction Code: ASME Section III, Code Class 1, 1971 Edition with Summer 1973 Addenda, Code Case: None
(b) Applicable Edition Of ASME Section XI Utilized For Repairs Or Replacements: 1989 Edition with no Addenda, Code Case: None
6. Identification Of Components Repaired Or Replaced And Replacement Components

Name Of Component	Name Of Manufacturer	Manufacturer's Serial No	National Board No	Other I.D.	Year Built	Repaired, Replaced Or Replacement	ASME Code Stamped (Yes Or No) Code Class
RPV	CBI Nuclear	T45	8	N/A	1974	----------	Yes, Code Class 1
LPRM	General Electric	94S0432	N/A	N/A	1994	Replaced	Yes, Code Class 1
LPRM	General Electric	94S0433	N/A	N/A	1994	Replacement	Yes, Code Class 1

7. Description Of Work Performed: Replaced existing Local Power Range Monitoring (LPRM) incore assembly. The replacement work was performed as follows:

1) Removed existing Local Power Range Monitoring (LPRM) incore assembly Serial No 94S0432 from the Reactor Pressure Vessel (RPV) Core Location No 32-09.
2) Installed replacement Local Power Range Monitoring (LPRM) incore assembly Serial No 94S0433 at the Reactor Pressure Vessel (RPV) Core Location No 32-09.

NOTES

1) General Electric (GE) Reuter-Stokes.
2) ASME Section III, Code Class 1, 1971 Edition with Summer 1971 Addenda for the Reactor Pressure Vessel (RPV) as documented on N-1A Code Data Report for nuclear vessels. ASME Section III, Code Class 1, 1971 Edition with Summer 1973 Addenda for the appurtenances installed for the RPV as documented on N-5 Code Data Report for field installation of nuclear power plant components, components supports and appurtenances such as incore housing, CRD housing, etc.
3) ASME Section III, Code Class 1, 1971 Edition with Summer 1977 Addenda for the replacement Local Power Range Monitoring (LPRM) incore assembly Serial No 94S0433.

PLAN No 2-1985

ENERGY NORTHWEST
People·Vision·Solutions

FORM NIS-2 OWNER'S REPORT FOR REPAIRS OR REPLACEMENTS (Back)

8 Tests Conducted: Hydrostatic [ ] *Pneumatic* [ ] *Nominal Operating Pressure* [ ] *None* [X]

Test Pressure: Psig *Test Temperature:* °F

Component Design Pressure: Psig *Temperature:* °F

9. Remarks (Applicable Manufacturer's Data Reports to be attached): See attached N-2 Code Data Report for the replacement Local Power Range Monitoring (LPRM) incore assembly Serial No 94S0432.

CERTIFICATE OF COMPLIANCE

We certify that the statements made in this Owner's Report are correct and this replacement *conforms to the rules of the ASME Code, Section XI.*

Type Code Symbol Stamp: Not Applicable

Certificate Of Authorization No.: Not Applicable

Expiration Date: Not Applicable

Prepared By Kuldip Singh - Program Lead Engineer (PLE) *Signed By* Kuldip Singh - Program Lead Engineer (PLE)

Date 6/16/05 *Date* 6/16/05

CERTIFICATE OF INSERVICE INSPECTION

I, the undersigned, holding a valid commission issued by the National Board of Boiler and Pressure Vessel Inspectors and the State of Washington *and employed by* Hartford Steam Boiler Of Connecticut of Hartford, Connecticut *have inspected the components described in this Owner's Report during the period* 4/25/2005 *to* 6/21/2005 *and state to the best of my knowledge and belief, the Owner has performed examinations and taken corrective measures described in this Owner's Report in accordance with the requirements of the ASME Code, Section XI.*

By signing this certificate neither the Inspector nor his employer makes any warranty, expressed or implied, concerning the examinations and corrective measures described in this Owner's Report. Furthermore, neither the Inspector nor his employer shall be liable in any manner for any personal injury or property damage or a loss of any kind arising from or connected with this inspection.

Inspector's Signature *Commissions* 10655W NBD 10655 A, B, N, I
National Board, State, and Endorsements

Date 6/21/2005

WORK ORDER NUMBER: 5626

PLAN NO. 2-1985

FORM N-2 MANUFACTURERS DATA REPORT FOR NUCLEAR PART AND APPURTENANCES

As required by the Provisions of the ASME Code Rules

1. (a) Manufactured by GE REUTER-STOKES, INC. 8499 DARROW ROAD, TWINSBURG, OHIO 44087
(Name and address of Manufacturer of part)

(b) Manufactured for WNP-2, WASHINGTON PUBLIC POWER SUPPLY SYSTEM, RICHLAND, WA 99352
(Name and address of Manufacturer of completed nuclear component)

2. Identification-Manufacturer's Serial No. of Part 94S0432 thru 94S0434 Nat'l Bd. No. N/A

(a) Constructed According to Drawing No. RS-C6-1315-201 Drawing Prepared by GE REUTER-STOKES

(b) Description of Part Inspected NA-300 POWER RANGE DETECTOR

(c) Applicable ASME Code: Section III, Edition 1977, Addenda date SUMMER 1977, Case No. N-176-1 Class 1

3. Remarks: DESIGN: PRESSURE 1250 PSIG, TEMPERATURE - VESSEL 575°F. SEAL 300°F.
(Brief description of service for which component was designed)

HYDROSTATIC TEST PRESSURE: 1925 PSIG

S/N 94S0433

We certify that the statements made in this report are correct and this vessel part or appurtenance as defined in the Code conforms to the rules of construction of the ASME Code Section III.
(The applicable Design Specification and Stress Report are not the responsibility of the part Manufacturer. An appurtenance Manufacturer is responsible for furnishing a separate Design Specification and Stress Report if the appurtenance is not included in the component Design Specification and Stress Report.)

Date 12-22- 19 94 Signed GE REUTER-STOKES (Manufacturer) By Robert A. Chandley QUALITY ASSURANCE

Certificate of Authorization Expires SEPTEMBER 16, 1997 Certificate of Authorization No. N-2703

CERTIFICATION OF DESIGN FOR APPURTENANCE (when applicable)

Design information on file at GE REUTER-STOKES, INC. TWINSBURG, OHIO DC24A1257AK

Stress analysis report on file at GE REUTER-STOKES, INC. TWINSBURG, OHIO CDR-C-5320-128

Design specifications certified by SURINDER L. KAMPANI Prof. Eng. State OH Reg. No. E-034113

Stress analysis report certified by DOUGLAS E. BACSO Prof. Eng. State OH Reg. No. E-044071

CERTIFICATE OF SHOP INSPECTION

I, the undersigned, holding a valid commission issued by the National Board of Boiler and Pressure Vessel Inspectors and/or the State or Province of OHIO and employed by H.S.B.I. & I. Co. of HARTFORD, CT have inspected the part of a pressure vessel described in this Manufacturer's Partial Data Report on 12 22 19 94, and state that to the best of my knowledge and belief, the Manufacturer has constructed this part in accordance with the ASME Code Section III.

By signing this certificate, neither the Inspector nor his employer makes any warranty, expressed or implied, concerning the part described in this Manufacturer's Partial Data Report. Furthermore, neither the Inspector nor his employer shall be liable in any manner for any personal injury or property damage or a loss of any kind arising from or connected with this inspection.

Date 22 December 19 94

Inspector's Signature

Commissions NB 8765 N
National Board, State, Province and No.

PLAN No 2-1986

ENERGY NORTHWEST
People·Vision·Solutions

FORM NIS-2 OWNER'S REPORT FOR REPAIRS OR REPLACEMENTS
As Required By The Provisions Of The ASME Code Section XI

1. Owner: Energy Northwest
Address: Columbia Generating Station, North Power Plant Loop, Richland, Washington, 99352
2. Plant: Columbia Generating Station
Address: Columbia Generating Station, North Power Plant Loop, Richland, Washington, 99352

Date: 07/09/05
Sheet: 1 Of 1
Unit: Not Applicable

3. (a) Work Performed By: Energy Northwest
(b) Repair Organization P.O. No, Job No, etc.: Energy Northwest
(c) Type Code Symbol Stamp: Not Applicable
(d) Certificate Of Authorization No.: Not Applicable
(e) Expiration Date: Not Applicable
4. Identification Of System: High Pressure Core Spray (HPCS) System
5. (a) Applicable Construction Code: ASME Section III, Code Class 2, 1971 Edition with Winter 1973 Addenda, Code Case: None
(b) Applicable Edition Of ASME Section XI Utilized For Repairs Or Replacements: 1989 Edition with no Addenda, . Code Case: None
6. Identification Of Components Repaired Or Replaced And Replacement Components

Name Of Component	Name Of Manufacturer	Manufacturer's Serial No	National Board No	Other I.D.	Year Built	Repaired, Replaced Or Replacement	ASME Code Stamped (Yes Or No) Code Class
HPCS(1)-4CL2	WPPSS*	HPCS(1)-4CL2-P2	N/A	N/A	1982	----------	Yes, Code Class 2

7. Description Of Work Performed: Modified connection with valve HPCS-V-713 and valve HPCS-V-714. The work was performed as follows:

1) Removed and eliminated existing valve HPCS-V-714, Serial No 13343.
2) Installed replacement piping material such as cap and pipe.
3) Made required socket welds XI-2 and XI-3.
4) Performed visual examination on the final socket welds XI-2 and XI-3. Visual examination results acceptable.
5) Performed liquid penetrant (PT) examination on the final socket weld XI-3. Liquid penetrant (PT) examination results acceptable.
6) Performed liquid penetrant (PT) examination on the final socket weld XI-2. Liquid penetrant (PT) examination results unacceptable.
7) Removed unacceptable liquid penetrant (PT) examination from socket weld XI-2.
8) Performed liquid penetrant (PT) examination on the excavated surfaces for socket weld XI-2. Liquid penetrant (PT) examination results acceptable.
9) Performed weld repair of the excavated surfaces for socket weld XI-2.
10) Performed visual examination on the final weld repaired surfaces for weld XI-2. Visual examination results acceptable.
11) Performed liquid penetrant (PT) examination on the weld repaired surfaces for socket weld XI-2. Liquid penetrant (PT) examination results acceptable.

NOTES -

1) * Company name changed from Washington Public Power Supply System (WPPSS) to Energy Northwest (EN) in 1999.

PLAN No 2-1986

ENERGY NORTHWEST
People·Vision·Solutions

FORM NIS-2 OWNER'S REPORT FOR REPAIRS OR REPLACEMENTS (Back)

8 Tests Conducted: Hydrostatic [ ] Pneumatic [ ] Nominal Operating Pressure [ ] None [X]

Test Pressure: Psig — Test Temperature: °F

Component Design Pressure: Psig — Temperature: °F

9. Remarks (Applicable Manufacturer's Data Reports to be attached): None

CERTIFICATE OF COMPLIANCE

We certify that the statements made in this Owner's Report are correct and this repair/replacement conforms to the rules of the ASME Code, Section XI.

Type Code Symbol Stamp: Not Applicable

Certificate Of Authorization No.: Not Applicable

Expiration Date: Not Applicable

Prepared By Kuldip Singh — Kuldip Singh - Program Lead Engineer (PLE)

Date 7/14/05

Signed By Kuldip Singh — Kuldip Singh - Program Lead Engineer (PLE)

Date 7/14/05

CERTIFICATE OF INSERVICE INSPECTION

I, the undersigned, holding a valid commission issued by the National Board of Boiler and Pressure Vessel Inspectors and the State of Washington and employed by Hartford Steam Boiler Of Connecticut of Hartford, Connecticut have inspected the components described in this Owner's Report during the period 5-20-2005 to 7-18-2005 and state to the best of my knowledge and belief, the Owner has performed examinations and taken corrective measures described in this Owner's Report in accordance with the requirements of the ASME Code, Section XI.

By signing this certificate neither the Inspector nor his employer makes any warranty, expressed or implied, concerning the examinations and corrective measures described in this Owner's Report. Furthermore, neither the Inspector nor his employer shall be liable in any manner for any personal injury or property damage or a loss of any kind arising from or connected with this inspection.

Inspector's Signature — Commissions 10655W A, B, N, I — National Board, State, and Endorsements

Date 7-18-2005

PLAN No 2-1987

ENERGY NORTHWEST
People·Vision·Solutions

FORM NIS-2 OWNER'S REPORT FOR REPAIRS OR REPLACEMENTS
As Required By The Provisions Of The ASME Code Section XI

1. Owner: Energy Northwest
Address: Columbia Generating Station, North Power Plant Loop, Richland, Washington, 99352
2. Plant: Columbia Generating Station
Address: Columbia Generating Station, North Power Plant Loop, Richland, Washington, 99352

Date: 06/09/05
Sheet: 1 Of 1
Unit: Not Applicable

3. (a) Work Performed By: Energy Northwest
(b) Repair Organization P.O. No, Job No, etc.: Energy Northwest
(c) Type Code Symbol Stamp: Not Applicable
(d) Certificate Of Authorization No.: Not Applicable
(e) Expiration Date: Not Applicable
4. Identification Of System: Reactor Closed Cooling (RCC) System
5. (a) Applicable Construction Code: ASME Section III, Code Class 3, 1971 Edition with Summer 1973 Addenda, Code Case: None
(b) Applicable Edition Of ASME Section XI Utilized For Repairs Or Replacements: 1989 Edition with no Addenda, Code Case: None
6. Identification Of Components Repaired Or Replaced And Replacement Components

Name Of Component	Name Of Manufacturer	Manufacturer's Serial No	National Board No	Other I.D.	Year Built	Repaired, Replaced Or Replacement	ASME Code Stamped (Yes Or No) Code Class
RCC-V-72B	Velan	77G614	N/A	N/A	1977	Replacement	Yes, Code Class 3

7. Description Of Work Performed: Replaces body to bonnet studs and nuts for valve RCC-V-72B, Serial No 77G614. The replacement work was performed as follows:

1) Remove existing studs from valve body to bonnet joint.
2) Remove existing nuts from valve body to bonnet joint.
3) Installed new replacement studs for valve body to bonnet joint.
4) Installed new replacement nuts for valve body to bonnet joint.
5) Performed VT-2 visual examination during pressure test to confirm pressure boundary integrity of the valve body to bonnet joint. No evidence of leakage during the pressure test.

PLAN No 2-1987

ENERGY NORTHWEST
People·Vision·Solutions

FORM NIS-2 OWNER'S REPORT FOR REPAIRS OR REPLACEMENTS (Back)

8 Tests Conducted: Hydrostatic [ ] Pneumatic [ ] Nominal Operating Pressure [X] Other [ ]

Test Pressure: 77 Psig — Test Temperature: 69° F

Component Design Pressure: 150 Psig — Temperature: 150° F

9. Remarks (Applicable Manufacturer's Data Reports to be attached): None

CERTIFICATE OF COMPLIANCE

We certify that the statements made in this Owner's Report are correct and this replacement conforms to the rules of the ASME Code, Section XI.

Type Code Symbol Stamp: Not Applicable

Certificate Of Authorization No.: Not Applicable

Expiration Date: Not Applicable

Prepared By Kuldip Singh — Kuldip Singh - Program Lead Engineer (PLE)

Signed By Kuldip Singh — Kuldip Singh - Program Lead Engineer (PLE)

Date 6/16/05 — Date 6/16/05

CERTIFICATE OF INSERVICE INSPECTION

I, the undersigned, holding a valid commission issued by the National Board of Boiler and Pressure Vessel Inspectors and the State of Washington and employed by Hartford Steam Boiler Of Connecticut of Hartford, Connecticut have inspected the components described in this Owner's Report during the period 4/22/2005 to 6/21/2005 and state to the best of my knowledge and belief, the Owner has performed examinations and taken corrective measures described in this Owner's Report in accordance with the requirements of the ASME Code, Section XI.

By signing this certificate neither the Inspector nor his employer makes any warranty, expressed or implied, concerning the examinations and corrective measures described in this Owner's Report. Furthermore, neither the Inspector nor his employer shall be liable in any manner for any personal injury or property damage or a loss of any kind arising from or connected with this inspection.

Inspector's Signature — Commissions 10655W A, B, N, I — National Board, State, and Endorsements

Date 6/21/2005

PLAN No 2-1989

ENERGY NORTHWEST
People·Vision·Solutions

FORM NIS-2 OWNER'S REPORT FOR REPAIRS OR REPLACEMENTS
As Required By The Provisions Of The ASME Code Section XI

1. Owner: Energy Northwest
Address: Columbia Generating Station, North Power Plant Loop, Richland, Washington, 99352
2. Plant: Columbia Generating Station
Address: Columbia Generating Station, North Power Plant Loop, Richland, Washington, 99352

Date: 06/26/05
Sheet: 1 Of 1
Unit: Not Applicable

3. (a) Work Performed By: Energy Northwest
(b) Repair Organization P.O. No, Job No, etc.: Energy Northwest
(c) Type Code Symbol Stamp: Not Applicable
(d) Certificate Of Authorization No.: Not Applicable
(e) Expiration Date: Not Applicable
4. Identification Of System: Reactor Recirculation (RRC) System
5. (a) Applicable Construction Code: ASME Section III, Code Class 1, 1971 Edition with Winter 1973 Addenda, Code Case: None
(b) Applicable Edition Of ASME Section XI Utilized For Repairs Or Replacements: 1989 Edition with no Addenda, Code Case: None
6. Identification Of Components Repaired Or Replaced And Replacement Components

Name Of Component	Name Of Manufacturer	Manufacturer's Serial No	National Board No	Other I.D.	Year Built	Repaired, Replaced Or Replacement	ASME Code Stamped (Yes Or No) Code Class
RRC(51)-4	WPPSS*	RRC(51)-4-P1	N/A	N/A	1983	----------	Yes, Code Class 1
RRC-4470-31	Pacific Scientific	356	N/A	N/A	-------	Replaced	Code Class1**
RRC-4470-31	NPS Industries	NA-2295-006-5	N/A	N/A	1988	Replacement	Yes, Code Class1

7. Description Of Work Performed: Replaced existing snubber with rigid strut for support RRC-4470-31. The replacement work was performed as follows:

1) Machined under sized pins.
2) Performed visual examination on the final machined surfaces. Visual examination results acceptable.
3) Modified replacement rigid strut Serial No NA-2295-006-5.
4) Removed existing snubber from the support.
5) Installed replacement rigid strut Serial No NA-2295-006-5 for the support.
6) Installed new under sized pins.
7) Verified that the replacement rigid strut was properly installed.
8) Performed VT-3 visual examination on the support to satisfy ISI (PSI) requirements. VT-3 visual examination results acceptable.

NOTES -

1) * Company name changed from Washington Public Power Supply System (WPPSS) to Energy Northwest (EN) in 1999.
2) ** ASME Section III, Code Class NF snubber.
3) The existing ASME Code Stamped piping systems in which the ASME Section III, Code Class NF (1) replacement rigid strut was installed is Reactor Recirculation (RRC) piping system RRC(51)-4-P1. This piping system is certified to comply with ASME Section III, Code Class 1, 1971 Edition with Winter 1973 Addenda requirements.

PLAN No 2-1989

ENERGY NORTHWEST
People·Vision·Solutions

FORM NIS-2 OWNER'S REPORT FOR REPAIRS OR REPLACEMENTS (Back)

8 Tests Conducted: Hydrostatic [ ] *Pneumatic* [ ] *Nominal Operating Pressure* [ ] *None* [X]
Test Pressure: Psig *Test Temperature:* °F
Component Design Pressure: Psig *Temperature:* °F

9. Remarks (Applicable Manufacturer's Data Reports to be attached): See attached NF-2 Code Data Report for the replacement rigid strut Serial No NA-2295-006-5.

CERTIFICATE OF COMPLIANCE

We certify that the statements made in this Owner's Report are correct and this replacement *conforms to the rules of the ASME Code, Section XI.*
Type Code Symbol Stamp: Not Applicable
Certificate Of Authorization No.: Not Applicable
Expiration Date: Not Applicable

Prepared By Kuldip Singh - Program Lead Engineer (PLE) *Signed By* Kuldip Singh - Program Lead Engineer (PLE)

Date 6/26/05 *Date* 6/26/05

CERTIFICATE OF INSERVICE INSPECTION

I, the undersigned, holding a valid commission issued by the National Board of Boiler and Pressure Vessel Inspectors and the State of Washington *and employed by* Hartford Steam Boiler Of Connecticut of Hartford, Connecticut *have inspected the components described in this Owner's Report during the period* 5/5/2005 *to* 7/5/2005 *and state to the best of my knowledge and belief, the Owner has performed examinations and taken corrective measures described in this Owner's Report in accordance with the requirements of the ASME Code, Section XI.*
By signing this certificate neither the Inspector nor his employer makes any warranty, expressed or implied, concerning the examinations and corrective measures described in this Owner's Report. Furthermore, neither the Inspector nor his employer shall be liable in any manner for any personal injury or property damage or a loss of any kind arising from or connected with this inspection.

Inspector's Signature *Commissions* 10655W A, B, N, I
National Board, State, and Endorsements

Date 7-5-2005

FORM NF-2 NPT CERTIFICATE HOLDERS' PARTIAL DATA REPORT FOR PARTS FOR COMPONENT SUPPORT*
As Required by the Provisions of the ASME Code Rules, Section III, Division 1 PLAN No 2-1989.

1. Manufactured by NPS INDUSTRIES, INC., 10420 METRIC BLVD., AUSTIN, TEXAS 78758
(Name and address of NPT Certificate Holder)

2. Manufactured for WASHINGTON PUBLIC POWER SUPPLY SYSTEM, PO BOX 968, RICHLAND, WA 99352
(Name and address of purchaser or owner)

3. Location of Installation WNP-2 OPS WHS COMPLEX, WHS#1 N. PWR. PLANT LOOP, RICHLAND, WA 99352

4.

	(a) Part Serial No.	(b) Canadian Registration No.	(c) Part Drawing No.	(d) Description of Part	(e) Class	(f) National Board No.	(g) Year Built
(1)	*	N/A	NPS-110	MODIFIED	1	N/A	1988
(2)			REV.0	SWAY STRUT			
(3)				ASSEMBLY			
(4)				SRS-08M-SO			
(5)	* NA-2295-006-1						
(6)	THRU						
(7)	NA-2295-006-5						
(8)							
(9)	SUPPORT RRC-4470-31, S/N NA-2295-006-5						
(10)							

pma

CERTIFICATE OF COMPLIANCE

6/26/05.

We certify that the statements made in this report are correct and that these component support parts conform to the rules of construction of the ASME Code for Nuclear Power Plant Components, Section III, Division 1, Edition 1971, Addenda WINTER 1973 (Date), Code Case no. N247.

Date MARCH 25 19 88. Signed NPS INDUSTRIES (NPT Certificate Holder) by SANDY REYNOLDS

Our ASME Certificate of Authorization No. N-2689 to use the NPT (NPT) Symbol expires JULY 12, 1988 (Date)

CERTIFICATE OF SHOP INSPECTION

I, the undersigned, holding a valid commission issued by the National Board of Boiler and Pressure Vessel Inspectors and the State or Province of TEXAS and employed by *HSBI&I CO. of HARTFORD, CONNECTICUT have inspected the parts for the component supports described in this Data Report on 3/25, 19 88, and state that to the best of my knowledge and belief the NPT Certificate Holder has constructed these component support parts in accordance with the ASME Code for Nuclear Power Plant Components.

*THE HARTFORD STEAM BOILER INSPECTION AND INSURANCE CO.

By signing this certificate, neither the Inspector nor his employer makes any warranty, expressed or implied, concerning the component supports described in this Data Report. Furthermore neither the Inspector nor his employer shall be liable in any manner for any personal injury or property damage or a loss of any kind arising from or connected with this inspection.

Date 3/25/88

Signed [signature] Commissions TEXAS 1186
(~~Nat'l Board~~, State, Province, and No.)

*Supplemental sheets in form of lists, sketches or drawings may be used provided (1) size is 8½ in. x 11 in., (2) information on items 1-4 on this Data Report is included on each sheet, and (3) each sheet is numbered and number of sheets is recorded at the top of this form.

5-30-88

PLAN No 2-1990

ENERGY NORTHWEST
People·Vision·Solutions

FORM NIS-2 OWNER'S REPORT FOR REPAIRS OR REPLACEMENTS
As Required By The Provisions Of The ASME Code Section XI

1. Owner: Energy Northwest
Address: Columbia Generating Station, North Power Plant Loop, Richland, Washington, 99352
2. Plant: Columbia Generating Station
Address: Columbia Generating Station, North Power Plant Loop, Richland, Washington, 99352

Date: 06/09/05
Sheet: 1 Of 1
Unit: Not Applicable

3. (a) Work Performed By: Energy Northwest
(b) Repair Organization P.O. No, Job No, etc.: Energy Northwest
(c) Type Code Symbol Stamp: Not Applicable
(d) Certificate Of Authorization No.: Not Applicable
(e) Expiration Date: Not Applicable
4. Identification Of System: Residual Heat Removal (RHR) System
5. (a) Applicable Construction Code: ASME Section III, Code Class 2, 1971 Edition with Winter 1973 Addenda, Code Case: None
(b) Applicable Edition Of ASME Section XI Utilized For Repairs Or Replacements: 1989 Edition with no Addenda, Code Case: None
6. Identification Of Components Repaired Or Replaced And Replacement Components

Name Of Component	Name Of Manufacturer	Manufacturer's Serial No	National Board No	Other I.D.	Year Built	Repaired, Replaced Or Replacement	ASME Code Stamped (Yes Or No) Code Class
RHR(3)-2A	WPPSS *	RHR(3)-2A-P1	N/A	N/A	1983	Replacement	Yes, Code Class 2

7. Description Of Work Performed: Installed blind flange for RHR-COND flush connection at valve RHR-V-7. The replacement work was performed as follows:

1) Installed new blind flange.
2) Installed new studs for the bolted flanged joints.
3) Installed new nuts for the bolted flanged joints.
4) Performed VT-2 visual examination during pressure test to confirm pressure boundary integrity of the bolted flanged joints. No evidence of leakage during the pressure test.

NOTES -

1) * Company name changed from Washington Public Power Supply System (WPPSS) to Energy Northwest (EN) in 1999.

PLAN No 2-1990

ENERGY NORTHWEST
People·Vision·Solutions

FORM NIS-2 OWNER'S REPORT FOR REPAIRS OR REPLACEMENTS (Back)

8 Tests Conducted: Hydrostatic [ ] Pneumatic [ ] Nominal Operating Pressure [X] Other [ ]
Test Pressure: 144 Psig
Component Design Pressure: 220 Psig
Test Temperature: 71.6° F
Temperature: 358° F

9. Remarks (Applicable Manufacturer's Data Reports to be attached): None

CERTIFICATE OF COMPLIANCE

We certify that the statements made in this Owner's Report are correct and this replacement conforms to the rules of the ASME Code, Section XI.
Type Code Symbol Stamp: Not Applicable
Certificate Of Authorization No.: Not Applicable
Expiration Date: Not Applicable

Prepared By Kuldip Singh
Kuldip Singh - Program Lead Engineer (PLE)
Date 6/11/05

Signed By Kuldip Singh
Kuldip Singh - Program Lead Engineer (PLE)
Date 6/11/05

CERTIFICATE OF INSERVICE INSPECTION

I, the undersigned, holding a valid commission issued by the National Board of Boiler and Pressure Vessel Inspectors and the State of Washington and employed by Hartford Steam Boiler Of Connecticut of Hartford, Connecticut have inspected the components described in this Owner's Report during the period 5/13/2005 to 6/14/2005 and state to the best of my knowledge and belief, the Owner has performed examinations and taken corrective measures described in this Owner's Report in accordance with the requirements of the ASME Code, Section XI.
By signing this certificate neither the Inspector nor his employer makes any warranty, expressed or implied, concerning the examinations and corrective measures described in this Owner's Report. Furthermore, neither the Inspector nor his employer shall be liable in any manner for any personal injury or property damage or a loss of any kind arising from or connected with this inspection.

Inspector's Signature

Commissions 10655W A, B, N, I
National Board, State, and Endorsements

Date 6/14/2005

PLAN No 2-1991

ENERGY NORTHWEST
People·Vision·Solutions

FORM NIS-2 OWNER'S REPORT FOR REPAIRS OR REPLACEMENTS
As Required By The Provisions Of The ASME Code Section XI

Date: 06/09/05
Sheet: 1 Of 1
Unit: Not Applicable

1. **Owner:** Energy Northwest
   Address: Columbia Generating Station, North Power Plant Loop, Richland, Washington, 99352
2. **Plant:** Columbia Generating Station
   Address: Columbia Generating Station, North Power Plant Loop, Richland, Washington, 99352
3. (a) **Work Performed By:** Energy Northwest
   (b) **Repair Organization P.O. No, Job No, etc.:** Energy Northwest
   (c) **Type Code Symbol Stamp:** Not Applicable
   (d) **Certificate Of Authorization No.:** Not Applicable
   (e) **Expiration Date:** Not Applicable
4. **Identification Of System:** Containment
5. (a) **Applicable Construction Code:** ASME Section III, Code Class MC, 1971 Edition with Summer 1972 Addenda, Code Case: None
   (b) **Applicable Edition Of ASME Section XI Utilized For Repairs Or Replacements:** 1992 Edition with 1992 Addenda, Code Case: None
6. **Identification Of Components Repaired Or Replaced And Replacement Components**

Name Of Component	Name Of Manufacturer	Manufacturer's Serial No	National Board No	Other I.D.	Year Built	Repaired, Replaced Or Replacement	ASME Code Stamped (Yes Or No) Code Class
Containment Drywell Head C-DH-1	PDM	12764	790	N/A	1976	----------	Yes, Code Class MC

7. **Description Of Work Performed:** Replaced nuts and bolts for the Containment Drywell Head C-DH-1 bolted joint. The replacement work was performed as follows:
   1) Performed VT-1 visual examination on replacement nuts for ISI (PSI). VT-1 visual examination results acceptable.
   3) Performed VT-1 visual examination on replacement bolts for ISI (PSI). VT-1 visual examination results acceptable.
   4) Installed three (3) replacement VT-1 visually examination nuts.
   4) Installed three (3) replacement VT-1 visually examination bolts.
   3) Performed VT-2 visual examination during pressure test to confirm pressure boundary integrity of the joint. No evidence of leakage during the pressure test.

PLAN No 2-1991

ENERGY NORTHWEST
People·Vision·Solutions

FORM NIS-2 OWNER'S REPORT FOR REPAIRS OR REPLACEMENTS (Back)

8 Tests Conducted: Hydrostatic [ ] *Pneumatic* [ ] *Nominal Operating Pressure* [ ] *Other* [ ]

Test Pressure: 38.86 Psig *Test Temperature:* 77.8° F

Component Design Pressure: 45 Psig *Temperature:* 340° F

9. Remarks: * VT-2 visual examination to confirm pressure boundary integrity of the Containment Drywell Head C-DH-1 bolted joint was performed during 10CFR50, Appendix J Local Leak Rate Test (LLRT).

CERTIFICATE OF COMPLIANCE

We certify that the statements made in this Owner's Report are correct and this replacement *conforms to the rules of the ASME Code, Section XI.*

Type Code Symbol Stamp: Not Applicable

Certificate Of Authorization No.: Not Applicable

Expiration Date: Not Applicable

Prepared By Kuldip Singh - Program Lead Engineer (PLE) *Signed By* Kuldip Singh - Program Lead Engineer (PLE)

Date 6/11/05 *Date* 6/11/05

CERTIFICATE OF INSERVICE INSPECTION

I, the undersigned, holding a valid commission issued by the National Board of Boiler and Pressure Vessel Inspectors and the State of Washington *and employed by* Hartford Steam Boiler Of Connecticut of Hartford, Connecticut *have inspected the components described in this Owner's Report during the period* 5/24/2005 *to* 6/14/2005 *and state to the best of my knowledge and belief, the Owner has performed examinations and taken corrective measures described in this Owner's Report in accordance with the requirements of the ASME Code, Section XI.*

By signing this certificate neither the Inspector nor his employer makes any warranty, expressed or implied, concerning the examinations and corrective measures described in this Owner's Report. Furthermore, neither the Inspector nor his employer shall be liable in any manner for any personal injury or property damage or a loss of any kind arising from or connected with this inspection.

Inspector's Signature *Commissions* 10655W A, B, N, I National Board, State, and Endorsements

Date 6/14/2005

PLAN No 2-1996

ENERGY NORTHWEST
People·Vision·Solutions

FORM NIS-2 OWNER'S REPORT FOR REPAIRS OR REPLACEMENTS
As Required By The Provisions Of The ASME Code Section XI

Date: 07/19/05
Sheet: 1 Of 1
Unit: Not Applicable

1. **Owner:** Energy Northwest
   Address: Columbia Generating Station, North Power Plant Loop, Richland, Washington, 99352
2. **Plant:** Columbia Generating Station
   Address: Columbia Generating Station, North Power Plant Loop, Richland, Washington, 99352
3. (a) **Work Performed By:** Energy Northwest
   (b) **Repair Organization P.O. No, Job No, etc.:** Energy Northwest
   (c) **Type Code Symbol Stamp:** Not Applicable
   (d) **Certificate Of Authorization No.:** Not Applicable
   (e) **Expiration Date:** Not Applicable
4. **Identification Of System:** Service Water (SW) System
5. (a) **Applicable Construction Code:** ASME Section III, Code Class 3, 1971 Edition with Winter 1973 Addenda, Code Case: None
   (b) **Applicable Edition Of ASME Section XI Utilized For Repairs Or Replacements:** 1989 Edition with no Addenda, Code Case: N-416-1
6. **Identification Of Components Repaired Or Replaced And Replacement Components**

Name Of Component	Name Of Manufacturer	Manufacturer's Serial No	National Board No	Other I.D.	Year Built	Repaired, Replaced Or Replacement	ASME Code Stamped (Yes Or No) Code Class
SW(1)-2UG	WPPSS*	SW(1)-2UG-P1	N/A	N/A	1983	----------	Yes, Code Class 3

7. **Description Of Work Performed:** Applied stainless steel weld overlay on the ID surfaces of the flange and elbow down stream of valve SW-V-2A. The repair work was performed as follows:
   1) Applied stainless steel weld overlay.
   2) Prepped the deposited stainless steel weld overlay.
   3) Performed visual examination on the final stainless steel weld overlay surfaces. Visual examination results acceptable.

NOTES -

1) * Company name changed from Washington Public Power Supply System (WPPSS) to Energy Northwest (EN) in 1999.
2) The ID cavitated pitted surface of the flange and elbow down stream of valve SW-V-2A was repaired in accordance with ASME Section XI Plan No 2-1982.
3) VT-2 visual examination during pressure test to confirm pressure boundary integrity of the joints was performed in accordance with ASME Section XI Plan No 2-1982.

PLAN No 2-1996

ENERGY NORTHWEST
People·Vision·Solutions

FORM NIS-2 OWNER'S REPORT FOR REPAIRS OR REPLACEMENTS (Back)

8 Tests Conducted: Hydrostatic ☐ Pneumatic ☐ Nominal Operating Pressure ☐ Other ☐

Test Pressure: * Psig — Test Temperature: * °F

Component Design Pressure: * Psig — Temperature: * °F

9. Remarks (Applicable Manufacturer's Data Reports to be attached): * VT-2 visual examination during pressure test to confirm pressure boundary integrity of the joints was performed in accordance with ASME Section XI Plan No 2-1982.

CERTIFICATE OF COMPLIANCE

We certify that the statements made in this Owner's Report are correct and this repair *conforms to the rules of the ASME Code, Section XI.*

Type Code Symbol Stamp: Not Applicable

Certificate Of Authorization No.: Not Applicable

Expiration Date: Not Applicable

Prepared By Kuldip Singh — Kuldip Singh - Program Lead Engineer (PLE)

Date 7/19/05

Signed By Kuldip Singh — Kuldip Singh - Program Lead Engineer (PLE)

Date 7/19/05

CERTIFICATE OF INSERVICE INSPECTION

I, the undersigned, holding a valid commission issued by the National Board of Boiler and Pressure Vessel Inspectors and the State of Washington *and employed by* Hartford Steam Boiler Of Connecticut of Hartford, Connecticut *have inspected the components described in this Owner's Report during the period* 5-10-2005 *to* 7-21-2005 *and state to the best of my knowledge and belief, the Owner has performed examinations and taken corrective measures described in this Owner's Report in accordance with the requirements of the ASME Code, Section XI.*

By signing this certificate neither the Inspector nor his employer makes any warranty, expressed or implied, concerning the examinations and corrective measures described in this Owner's Report. Furthermore, neither the Inspector nor his employer shall be liable in any manner for any personal injury or property damage or a loss of any kind arising from or connected with this inspection.

Inspector's Signature

Commissions 10655W A, B, N, I

National Board, State, and Endorsements

Date 7-21-2005

ENERGY NORTHWEST
People·Vision·Solutions

FORM NIS-2 OWNER'S REPORT FOR REPAIRS OR REPLACEMENTS
As Required By The Provisions Of The ASME Code Section XI

Date: 07/19/05
Sheet: 1 Of 1
Unit: Not Applicable

1. **Owner:** Energy Northwest
   Address: Columbia Generating Station, North Power Plant Loop, Richland, Washington, 99352
2. **Plant:** Columbia Generating Station
   Address: Columbia Generating Station, North Power Plant Loop, Richland, Washington, 99352
3. **(a) Work Performed By:** Energy Northwest
   (b) Repair Organization P.O. No, Job No, etc.: Energy Northwest
   (c) Type Code Symbol Stamp: Not Applicable
   (d) Certificate Of Authorization No.: Not Applicable
   (e) Expiration Date: Not Applicable
4. **Identification Of System:** Service Water (SW) System
5. **(a) Applicable Construction Code:** ASME Section III, Code Class 3, 1971 Edition with Winter 1973 Addenda, Code Case: None
   (b) Applicable Edition Of ASME Section XI Utilized For Repairs Or Replacements: 1989 Edition with no Addenda, Code Case: N-416-1
6. **Identification Of Components Repaired Or Replaced And Replacement Components**

Name Of Component	Name Of Manufacturer	Manufacturer's Serial No	National Board No	Other I.D.	Year Built	Repaired, Replaced Or Replacement	ASME Code Stamped (Yes Or No) Code Class
SW(2)-2-UG	WPPSS*	SW(2)-2-UG-P1	N/A	N/A	1983	----------	Yes, Code Class 3

7. **Description Of Work Performed:** Applied stainless steel weld overlay on the ID surfaces of the flange and elbow down stream of valve SW-V-2B. The repair work was performed as follows:
   1) Applied stainless steel weld overlay.
   2) Prepped the deposited stainless steel weld overlay.
   3) Performed visual examination on the final stainless steel weld overlay surfaces. Visual examination results acceptable.

NOTES -

1) * Company name changed from Washington Public Power Supply System (WPPSS) to Energy Northwest (EN) in 1999.
2) The ID cavitated pitted surface of the flange and elbow down stream of valve SW-V-2B was repaired in accordance with ASME Section XI Plan No 2-1983.
3) VT-2 visual examination during pressure test to confirm pressure boundary integrity of the joints was performed in accordance with ASME Section XI Plan No 2-1983.

PLAN No 2-1997

ENERGY NORTHWEST
People·Vision·Solutions

FORM NIS-2 OWNER'S REPORT FOR REPAIRS OR REPLACEMENTS (Back)

8 Tests Conducted: Hydrostatic ☐ Pneumatic ☐ Nominal Operating Pressure ☐ Other ☐ *

Test Pressure: * Psig — Test Temperature: *°F

Component Design Pressure: * Psig — Temperature: *°F

9. Remarks (Applicable Manufacturer's Data Reports to be attached): * VT-2 visual examination during pressure test to confirm pressure boundary integrity of the joints was performed in accordance with ASME Section XI Plan No 2-1983.

CERTIFICATE OF COMPLIANCE

We certify that the statements made in this Owner's Report are correct and this repair *conforms to the rules of the ASME Code, Section XI.*

Type Code Symbol Stamp: Not Applicable

Certificate Of Authorization No.: Not Applicable

Expiration Date: Not Applicable

Prepared By Kuldip Singh - Program Lead Engineer (PLE) *Signed By* Kuldip Singh - Program Lead Engineer (PLE)

Date 7/19/05 *Date* 7/19/05

CERTIFICATE OF INSERVICE INSPECTION

I, the undersigned, holding a valid commission issued by the National Board of Boiler and Pressure Vessel Inspectors and the State of Washington *and employed by* Hartford Steam Boiler Of Connecticut of Hartford, Connecticut *have inspected the components described in this Owner's Report during the period* 5-17-2005 *to* 7-21-2005 *and state to the best of my knowledge and belief, the Owner has performed examinations and taken corrective measures described in this Owner's Report in accordance with the requirements of the ASME Code, Section XI.*

By signing this certificate neither the Inspector nor his employer makes any warranty, expressed or implied, concerning the examinations and corrective measures described in this Owner's Report. Furthermore, neither the Inspector nor his employer shall be liable in any manner for any personal injury or property damage or a loss of any kind arising from or connected with this inspection.

Inspector's Signature — *Commissions* 10655W A, B, N, I — National Board, State, and Endorsements

Date 7-21-2005

PLAN No 2-1998

ENERGY NORTHWEST
People·Vision·Solutions

FORM NIS-2 OWNER'S REPORT FOR REPAIRS OR REPLACEMENTS
As Required By The Provisions Of The ASME Code Section XI

Date: 06/26/05
Sheet: 1 Of 1
Unit: Not Applicable

1. **Owner:** Energy Northwest
   Address: Columbia Generating Station, North Power Plant Loop, Richland, Washington, 99352
2. **Plant:** Columbia Generating Station
   Address: Columbia Generating Station, North Power Plant Loop, Richland, Washington, 99352
3. **(a) Work Performed By:** Energy Northwest
   (b) Repair Organization P.O. No, Job No, etc.: Energy Northwest
   (c) Type Code Symbol Stamp: Not Applicable
   (d) Certificate Of Authorization No.: Not Applicable
   (e) Expiration Date: Not Applicable
4. **Identification Of System:** Reactor Pressure Vessel (RPV)
5. **(a) Applicable Construction Code:** ASME Section III, Code Class 1, 1971 Edition with Summer 1971 Addenda, Code Case: None
   (b) Applicable Edition Of ASME Section XI Utilized For Repairs Or Replacements: 1989 Edition with no Addenda, Code Case: None
6. **Identification Of Components Repaired Or Replaced And Replacement Components**

Name Of Component	Name Of Manufacturer	Manufacturer's Serial No	National Board No	Other I.D.	Year Built	Repaired, Replaced Or Replacement	ASME Code Stamped (Yes Or No) Code Class
Reactor Pressure Vessel (RPV)	CBI Nuclear	T45	8	N/A	1974	----------	Yes, Code Class 1

7. **Description Of Work Performed:** Performed additional weld contour of the nozzle safe end welds for Reactor Pressure Vessel (RPV) for ultrasonic (UT) examination. The additional weld contour of the welds was required on as needed basis to allow the UT transducer contact in order to prevent the lift off of the transducer from the weld. The as needed additional weld contour consisted of the following steps:
   1) Ground the weld surfaces on as needed basis.
   2) Performed liquid penetrant (PT) examination on the final ground surfaces. Liquid penetrant (PT) examination results acceptable.

The following information is for additional weld contour of the nozzle safe end welds for Reactor Pressure Vessel (RPV) for ultrasonic (UT) examination:

Joint No	ISI Weld No	PT Report No	WOT No
1	12RRC(1)-N2D-6	5-05-24-1	01085533 01
2	12RRC(1)-N2E-6	5-05-25-1	01085534 01
3	12RRC(1)-N2F-6	5-05-26-1	01085536 01
4	12RRC(1)-N2G-6	5-05-30-1	01085538 01
5	12RRC(1)-N2H-6	5-05-31-1	01085539 01
6	12RRC(1)-N2J-6	5-05-20-1	01085541 01

PLAN No 2-1998

ENERGY NORTHWEST
People·Vision·Solutions

FORM NIS-2 OWNER'S REPORT FOR REPAIRS OR REPLACEMENTS (Back)

8 Tests Conducted: Hydrostatic [ ] Pneumatic [ ] Nominal Operating Pressure [ ] None [X]
Test Pressure: Psig — Test Temperature: °F
Component Design Pressure: Psig — Temperature: °F

9. Remarks (Applicable Manufacturer's Data Reports to be attached): None

CERTIFICATE OF COMPLIANCE

We certify that the statements made in this Owner's Report are correct and this repair conforms to the rules of the ASME Code, Section XI.
Type Code Symbol Stamp: Not Applicable
Certificate Of Authorization No.: Not Applicable
Expiration Date: Not Applicable

Prepared By Kuldip Singh - Program Lead Engineer (PLE) — Signed By Kuldip Singh - Program Lead Engineer (PLE)

Date 6/26/05 — Date 6/26/05

CERTIFICATE OF INSERVICE INSPECTION

I, the undersigned, holding a valid commission issued by the National Board of Boiler and Pressure Vessel Inspectors and the State of Washington and employed by Hartford Steam Boiler Of Connecticut of Hartford, Connecticut have inspected the components described in this Owner's Report during the period 5/13/05 to 7/5/2005 and state to the best of my knowledge and belief, the Owner has performed examinations and taken corrective measures described in this Owner's Report in accordance with the requirements of the ASME Code, Section XI.
By signing this certificate neither the Inspector nor his employer makes any warranty, expressed or implied, concerning the examinations and corrective measures described in this Owner's Report. Furthermore, neither the Inspector nor his employer shall be liable in any manner for any personal injury or property damage or a loss of any kind arising from or connected with this inspection.

Inspector's Signature — Commissions 10655W NB 10655 A,B,N,I — National Board, State, and Endorsements

Date 7/5/2005

PLAN No 2-2001

ENERGY NORTHWEST
People·Vision·Solutions

FORM NIS-2 OWNER'S REPORT FOR REPAIRS OR REPLACEMENTS
As Required By The Provisions Of The ASME Code Section XI

1. Owner: Energy Northwest
Address: Columbia Generating Station, North Power Plant Loop, Richland, Washington, 99352
2. Plant: Columbia Generating Station
Address: Columbia Generating Station, North Power Plant Loop, Richland, Washington, 99352

Date: 06/25/05
Sheet: 1 Of 1
Unit: Not Applicable

3. (a) Work Performed By: Energy Northwest
(b) Repair Organization P.O. No, Job No, etc.: Energy Northwest
(c) Type Code Symbol Stamp: Not Applicable
(d) Certificate Of Authorization No.: Not Applicable
(e) Expiration Date: Not Applicable
4. Identification Of System: Reactor Core Isolation Cooling (RCIC) System
5. (a) Applicable Construction Code: ASME Section III, Code Class 1, 1971 Edition with Winter 1973 Addenda, Code Case: None
(b) Applicable Edition Of ASME Section XI Utilized For Repairs Or Replacements: 1989 Edition with no Addenda, Code Case: None
6. Identification Of Components Repaired Or Replaced And Replacement Components

Name Of Component	Name Of Manufacturer	Manufacturer's Serial No	National Board No	Other I.D.	Year Built	Repaired, Replaced Or Replacement	ASME Code Stamped (Yes Or No) Code Class
RCIC(1)-4CL1	WPPSS*	RCIC(1)-4CL1-P1	N/A	N/A	1984	----------	Yes, Code Class 1
RCIC-V-114	Borg Warner	12676	N/A	N/A	1977	Replaced	Yes, Code Class 1
RCIC-V-114	Dragon	PB 1296	N/A	N/A	1997	Replacement	Yes, Code Class 1
RCIC-V-115	Borg Warner	13542	N/A	N/A	1977	Replaced	Yes, Code Class 1
RCIC-V-115	Dragon	PB 1231	N/A	N/A	1994	Replacement	Yes, Code Class 1

7. Description Of Work Performed: Replaced (modified) the existing test connection with valves RCIC-V-114 and RRC-V-115. The replacement (fabrication and installation) work was performed as follows:

1) Fabricated two (2) new replacement pipe nipples.
2) Performed liquid penetrant (PT) examination on all the accessible internal final machined surfaces of the new replacement pipe nipples. Liquid penetrant (PT) examination results acceptable.
3) Performed liquid penetrant (PT) examination on all the external final surfaces of the entire length of the new replacement pipe nipples. Liquid penetrant (PT) examination results acceptable.
4) Removed/machined threaded outlet ends (two ends) for the two new replacement valves.
5) Performed liquid penetrant (PT) examination on all the valve accessible internal outlet ends (two ends) for both the valves. Liquid penetrant (PT) examination results acceptable.
6) Beveled the valve ends (four ends) for both the valves.
7) Performed liquid penetrant (PT) examination on the valve beveled ends (four ends) for both the valves. Liquid penetrant (PT) examination results acceptable.
8) Cut and removed the existing test connection with valves RCIC-V-114 and RRC-V-115.
9) Prepped the existing sockolet surfaces.
10) Performed liquid penetrant (PT) examination on the sockolet prepped surfaces. Liquid penetrant (PT) examination results acceptable.
11) Installed new piping material such as fabricated pipe nipples, valves, pipe cap.
12) Made required socket weld.
13) Performed visual examination on the final socket weld. Visual examination results acceptable.
14) Performed liquid penetrant (PT) examination on the final socket weld. Liquid penetrant (PT) examination results acceptable.
15) Made required circumferential butt welds.
16) Performed visual examination on the final circumferential butt welds. Visual examination results acceptable.
17) Performed liquid penetrant (PT) examination on the final circumferential butt welds. Liquid penetrant (PT) examination results acceptable.
18) Performed radiographic (RT) examination on the final circumferential butt welds. Radiographic (RT) examination results acceptable.

NOTES -

1) * Company name changed from Washington Public Power Supply System (WPPSS) to Energy Northwest (EN) in 1999.
2) The existing ASME Code Stamped piping system in which the replacement valves RCIC-V-114, Serial No PB 1296 and RRC-V-115, Serial No PB 1231 were installed is Reactor Core Isolation Cooling (RCIC) piping system RRC(1)-4CL1-P1. This piping system is certified to comply with ASME Section III, Code Class 1, 1971 Edition with Winter 1973 Addenda requirements.
3) The replacement valves RCIC-V-114, Serial No PB 1296 and RRC-V-115, Serial No PB 1231 are certified to comply with ASME Section III, Code Class 1, 1974 Edition with Summer 1975 Addenda requirements.

PLAN No 2-2001

ENERGY NORTHWEST
People·Vision·Solutions

FORM NIS-2 OWNER'S REPORT FOR REPAIRS OR REPLACEMENTS (Back)

8 Tests Conducted: Hydrostatic [ ] *Pneumatic* [ ] *Nominal Operating Pressure* [ ] *None* [X]

Test Pressure: Psig *Test Temperature:* °F

Component Design Pressure: Psig *Temperature:* °F

9. Remarks (Applicable Manufacturer's Data Reports to be attached): See attached NPV-1 Code Data Reports for the following replacement valves:

EPN No	Serial No
RCIC-V-114	PB 1296
RCIC-V-115	PB 1231

CERTIFICATE OF COMPLIANCE

We certify that the statements made in this Owner's Report are correct and this replacement *conforms to the rules of the ASME Code, Section XI.*

Type Code Symbol Stamp: Not Applicable

Certificate Of Authorization No.: Not Applicable

Expiration Date: Not Applicable

Prepared By Kuldip Singh - Program Lead Engineer (PLE) *Signed By* Kuldip Singh - Program Lead Engineer (PLE)

Date 6/26/05 *Date* 6/26/05

CERTIFICATE OF INSERVICE INSPECTION

I, the undersigned, holding a valid commission issued by the National Board of Boiler and Pressure Vessel Inspectors and the State of _____ *and employed by* _____ _____ *have inspected the components described in this Owner's Report during the period* _____ *to* _____ *and state to the best of my knowledge and belief, the Owner has performed examinations and taken corrective measures described in this Owner's Report in accordance with the requirements of the ASME Code, Section XI.*

By signing this certificate neither the Inspector nor his employer makes any warranty, expressed or implied, concerning the examinations and corrective measures described in this Owner's Report. Furthermore, neither the Inspector nor his employer shall be liable in any manner for any personal injury or property damage or a loss of any kind arising from or connected with this inspection.

Not Required - Replacement 1" NPS And Smaller *Commissions* _____

Inspector's Signature National Board, State, and Endorsements

Date _____

PLAN No. 2-2001

FORM NPV-1 N CERTIFICATE HOLDERS' DATA REPORT FOR NUCLEAR PUMPS OR VALVES*

As Required by the Provisions of the ASME Code, Section III, Div. 1

1. Manufactured by Dragon Valves, Inc., 13457 Excelsior Dr., Norwalk, CA. 90650 6/25/05
   (Name and Address of N Certificate Holder)
2. Manufactured for Wash. Public Power Sup. Sys., P.O. Box 968, Richland, WA. 99352-0968
   (Name and Address of Purchaser or Owner)
3. Location of Installation WNP-2 North Power Plant Loop, Richland, WA. 99352
   (Name and Address)
4. Pump or Valve Valve. Nominal Inlet Size 1/2 (inch) Outlet Size 1/2 (inch)

	(a) Model No., Series No. or Type	(b) N Certificate Holder's Serial No.	(c) Canadian Registration No.	(d) Drawing No.	(e) Class	(f) Nat'l. Bd. No.	(g) Year Built
(1)	7N057SW7D	PB1293	N/A	13828	1	N/A	1997
(2)		Thru		Rev. A			
(3)		PB1298					
(4)							
(5)							
(6)							
(7)	VALVE. RCIC-V-114, S/N PB1296.						
(8)							
(9)							
(10)							

5. Globe Valve OS & Y (6 Pcs.)
   (Brief description of service for which equipment was designed)

6. Design Conditions 3600 (Pressure) psi 100 (Temperature) °F or Valve Pressure Class 1500 (1)
7. Cold Working Pressure 3600 psi at 100°F.
8. Pressure Retaining Pieces

Mark No	Material Spec. No.	Manufacturer	Remarks
(a) Castings N/A			
(b) Forgings			
HT. 42341H	ASME SA182 GR. F316	Ajax Forge Co.	Body
HT. A19167	ASME SA182 GR. F316	Ajax Forge Co.	Bonnet Yoke

(1) For manually operated valves only.

* Supplemental sheets in form of lists, sketches or drawings may be used provided (1) size is 8-1/2" x 11", (2) information in items 1, 2 and 5 on this Data Report is included on each sheet, and (3) each sheet is numbered and number of sheets is recorded at top of this form.

(10/77) This form (E00037) may be obtained from the Order Dept., ASME, 345 E. 47th St., New York, N.Y. 10017

FORM NPV-1 (Back)

Mark No.	Material Spec. No.	Manufacturer	Remarks
(c) Bolting N/A			
(d) Other Parts			
HT. 705679	ASME SA564 GR. 630	Carpenter Tech.	Disc

9. Hydrostatic test 5400 psi. Disk Differential test pressure 3600 psi.

CERTIFICATE OF COMPLIANCE

We certify that the statements made in this report are correct and that this pump, or valve, conforms to the rules of construction of the ASME Code for Nuclear Power Plant Components. Section III, Div. I., Edition 1974.
Addenda S'75 (Date). Code Case No. N/A. Date December 10, 1997
Signed Dragon Valves, Inc. (N Certificate Holder) by R. C. Snyder
Our ASME Certificate of Authorization No. N-1033 to use the N (N) symbol expires 5/6/99 (Date).

CERTIFICATION OF DESIGN

Design information on file at Washington Public Power Supply Systems
Stress analysis report (Class 1 only) on file at Washington Public Power Supply Systems

Design specifications certified by (1) Abbas A. Mostala
PE State WA. Reg. No. 28777
Stress analysis certified by (1) Harold M. Braund
PE State CA. Reg. No. M20589

(1) Signature not required. List name only.

CERTIFICATE OF SHOP INSPECTION

I, the undersigned, holding a valid commission issued by the National Board of Boiler and Pressure Vessel Inspectors and the State or Province of CALIFORNIA and employed by H.S.B. INSP. & INS. CO. of HARTFORD, CT. have inspected the pump, or valve, described in this Data Report on 12-11 19 97, and state that to the best of my knowledge and belief, the N Certificate Holder has constructed this pump, or valve, in accordance with the ASME Code, Section III.

By signing this certificate, neither the Inspector nor his employer makes any warranty, expressed or implied, concerning the equipment described in this Data Report. Furthermore, neither the Inspector nor his employer shall be liable in any manner for any personal injury or property damage or a loss of any kind arising from or connected with this inspection.

Date 12-11 19 97.
Cirilo F. Reyes (Inspector) Commissions CA1526 (Nat'l Bd., State, Prov. and No.)

DEC 17 '97

PLAN No. 2-2001

FORM NPV-1 N CERTIFICATE HOLDERS' DATA REPORT FOR NUCLEAR PUMPS OR VALVES*

As Required by the Provisions of the ASME Code, Section III, Div. 1

1. Manufactured by Dragon Valves, Inc., 13457 Excelsior Dr., Norwalk, CA. 90650
(Name and Address of N Certificate Holder)
2. Manufactured for Wash. Public Power Sup. P.O. Box 968, Richland, WA 99352
(Name and Address of Purchaser or Owner)
3. Location of Installation WNP-2 North Power Plant Loop, Richland, WA 99352
(Name and Address)
4. Pump or Valve Valve. Nominal Inlet Size 1/2 (inch) Outlet Size 1/2 (inch)

	(a) Model No., Series No. or Type	(b) N Certificate Holder's Serial No.	(c) Canadian Registration No.	(d) Drawing No.	(e) Class	(f) Nat'l. Bd. No.	(g) Year Built
(1)	7N057SW7D	PB1227	N/A	13828	1	N/A	1994
(2)		Thru		Rev. N/C			
(3)		PB1231					
(4)							
(5)							
(6)	VALVE RCIC-V-115, S/N PB1231						
(7)							
(8)							
(9)							
(10)							

5. Globe Valve O S & Y (5 Pcs.)
(Brief description of service for which equipment was designed)

6. Design Conditions 3600 (Pressure) psi 100 (Temperature) °F or Valve Pressure Class 1500 (1)
7. Cold Working Pressure 3600 psi at 100°F.
8. Pressure Retaining Pieces

Mark No.	Material Spec. No.	Manufacturer	Remarks
(a) Castings N/A			
(b) Forgings			
HT.38061	ASME SA182 GR. F316	Ajax Forge Co.	Body
HT.A19167	ASME SA182 GR. F316	Ajax Forge Co.	Bonnet Yoke

(1) For manually operated valves only.

* Supplemental sheets in form of lists, sketches or drawings may be used provided (1) size is 8-1/2" x 11", (2) information in items 1, 2 and 5 on this Data Report is included on each sheet, and (3) each sheet is numbered and number of sheets is recorded at top of this form.

(10/77) This form (E00037) may be obtained from the Order Dept., ASME, 345 E. 47th St., New York, N.Y. 10017

9/5100628.0158

FORM NPV-1 (Back)

Mark No.	Material Spec. No.	Manufacturer	Remarks
(c) Bolting N/A			
(d) Other Parts			
HT.853543	ASME SA564 GR. 630	Carpenter Tech.	Disc

9. Hydrostatic test 5400 psi. Disk Differential test pressure 3600 psi.

CERTIFICATE OF COMPLIANCE

We certify that the statements made in this report are correct and that this pump, or valve, conforms to the rules of construction of the ASME Code for Nuclear Power Plant Components. Section III, Div. I., Edition 1974.
Addenda S'75 (Date). Code Case No. N/A. Date January 26, 1994
Signed DRAGON VALVES, INC. (N Certificate Holder) by R. L. Snyder
Our ASME Certificate of Authorization No. N-1033 to use the N (N) symbol expires 5/6/96 (Date).

CERTIFICATION OF DESIGN

Design information on file at Washington Public Power Supply System
Stress analysis report (Class 1 only) on file at Washington Public Power Supply System

Design specifications certified by (1) David J. Murphy
PE State WA Reg. No. 12542
Stress analysis certified by (1) Harold M. Braund
PE State CA Reg. No. M20589

SATISFACTORY ✓ UNSATISFACTORY ____
H. M. Braund II 2/8/94
RECEIPT INSPECTOR / LEVEL / DATE

(1) Signature not required. List name only.

CERTIFICATE OF SHOP INSPECTION

I, the undersigned, holding a valid commission issued by the National Board of Boiler and Pressure Vessel Inspectors and the State or Province of CALIFORNIA and employed by H.S.B. INSP. & INS. CO. of HARTFORD, CT. have inspected the pump, or valve, described in this Data Report on Jan. 28 19 94, and state that to the best of my knowledge and belief, the N Certificate Holder has constructed this pump, or valve, in accordance with the ASME Code, Section III.

By signing this certificate, neither the Inspector nor his employer makes any warranty, expressed or implied, concerning the equipment described in this Data Report. Furthermore, neither the Inspector nor his employer shall be liable in any manner for any personal injury or property damage or a loss of any kind arising from or connected with this inspection.

Date 1-28 19 94.
Ralph Shum Commissions CA 1716

0258280001577

PLAN No 2-2002

ENERGY NORTHWEST
People·Vision·Solutions

FORM NIS-2 OWNER'S REPORT FOR REPAIRS OR REPLACEMENTS
As Required By The Provisions Of The ASME Code Section XI

1. Owner: Energy Northwest
Address: Columbia Generating Station, North Power Plant Loop, Richland, Washington, 99352
2. Plant: Columbia Generating Station
Address: Columbia Generating Station, North Power Plant Loop, Richland, Washington, 99352

Date: 06/28/05
Sheet: 1 Of 1
Unit: Not Applicable

3. (a) Work Performed By: Energy Northwest
(b) Repair Organization P.O. No, Job No, etc.: Energy Northwest
(c) Type Code Symbol Stamp: Not Applicable
(d) Certificate Of Authorization No.: Not Applicable
(e) Expiration Date: Not Applicable
4. Identification Of System: Reactor Recirculation (RRC) System
5. (a) Applicable Construction Code: ASME Section III, Code Class 1, 1971 Edition with Winter 1973 Addenda, Code Case: None
(b) Applicable Edition Of ASME Section XI Utilized For Repairs Or Replacements: 1989 Edition with no Addenda, Code Case: None
6. Identification Of Components Repaired Or Replaced And Replacement Components

Name Of Component	Name Of Manufacturer	Manufacturer's Serial No	National Board No	Other I.D.	Year Built	Repaired, Replaced Or Replacement	ASME Code Stamped (Yes Or No) Code Class
RRC(51)-4	WPPSS*	RRC(51)-4-P1	N/A	N/A	1983	----------	Yes, Code Class 1
RRC-V-19	Target Rock	3	N/A	N/A	1997	Replaced	Yes, Code Class 1
RRC-V-19	Target Rock	9	N/A	N/A	2004	Replacement	Yes, Code Class 1

7. Description Of Work Performed: Replaced existing valve RRC-V-19. The replacement work was performed as follows:
1) Removed existing valve RRC-V-19, Serial No 3.
2) Installed replacement valve RRC-V-19, Serial No 9.

NOTES -
1) * Company name changed from Washington Public Power Supply System (WPPSS) to Energy Northwest (EN) in 1999.
2) The existing ASME Code Stamped piping system in which the replacement valve RRC-V-19, Serial No 9 was installed is Reactor Recirculation (RRC) piping system RRC(51)-4-P1. This piping system is certified to comply with ASME Section III, Code Class 1, 1971 Edition with Winter 1973 Addenda requirements.
3) The replacement valve RRC-V-19, Serial No 9 is certified to comply with ASME Section III, Code Class 1, 1980 Edition with Winter 1981 Addenda requirements.

PLAN No 2-2002

ENERGY NORTHWEST
People·Vision·Solutions

FORM NIS-2 OWNER'S REPORT FOR REPAIRS OR REPLACEMENTS (Back)

8 Tests Conducted: Hydrostatic [ ] Pneumatic [ ] Nominal Operating Pressure [ ] None [X]
Test Pressure: Psig Test Temperature: °F
Component Design Pressure: Psig Temperature: °F

9. Remarks (Applicable Manufacturer's Data Reports to be attached): See attached NPV-1 Code Data Report for the replacement valve RRC-V-19, Serial No 9.

CERTIFICATE OF COMPLIANCE

We certify that the statements made in this Owner's Report are correct and this replacement conforms to the rules of the ASME Code, Section XI.
Type Code Symbol Stamp: Not Applicable
Certificate Of Authorization No.: Not Applicable
Expiration Date: Not Applicable

Prepared By Kuldip Singh - Program Lead Engineer (PLE) Signed By Kuldip Singh - Program Lead Engineer (PLE)
Date 6/28/05 Date 6/28/05

CERTIFICATE OF INSERVICE INSPECTION

I, the undersigned, holding a valid commission issued by the National Board of Boiler and Pressure Vessel Inspectors and the State of _____ and employed by _____ have inspected the components described in this Owner's Report during the period _____ to _____ and state to the best of my knowledge and belief, the Owner has performed examinations and taken corrective measures described in this Owner's Report in accordance with the requirements of the ASME Code, Section XI.
By signing this certificate neither the Inspector nor his employer makes any warranty, expressed or implied, concerning the examinations and corrective measures described in this Owner's Report. Furthermore, neither the Inspector nor his employer shall be liable in any manner for any personal injury or property damage or a loss of any kind arising from or connected with this inspection.

Not Required - Replacement 1" NPS And Smaller Commissions _____
Inspector's Signature National Board, State, and Endorsements
Date _____

PLAN No. 2-2002
Philip Smith 6/26/05

FORM NPV-1 CERTIFICATE HOLDERS' DATA REPORT FOR NUCLEAR PUMPS OR VALVES*
As Required by the Provisions of the ASME Code, Section III, Division 1

1. Manufactured and certified by Target Rock; 1966E Broadhollow Rd.; E. Farmingdale, NY 11735
(name and address of N Certificate Holder)

2. Manufactured for Energy Northwest; North Power Plant Loop; Richland, WA
(name and address of Purchaser)

3. Location of installation Columbia Generating Station; North Power Plant Loop; Richland, WA
(name and address)

4. Model No., Series No., or Type 96T-001 Drawing 96T-001 Rev. B CRN N/A

5. ASME Code, Section III, Division 1: 1980 (edition) Winter 1981 (addenda date) 1 (class) None (Code Case no.)

6. Pump or valve Valve Nominal inlet size 1 (in.) Outlet size 1 (in.)

7. Material: Body SA479 316 Bonnet SA479 XM-19 Disc SA479 348 Bolting SA453 660

(a) Cert. Holder's Serial No.	(b) Nat'l Board No.	(c) Body Serial No.	(d) Bonnet Serial No.	(e) Disc Serial No.
9	N/A	83	58	104
N/A		N/A	N/A	N/A

VALVE RPC-V-19, S/N 9.

* Supplemental information in form of lists, sketches, or drawings may be used provided (1) size is 8½ x 11, (2) information in items 1 through 4 on this Data Report is included on each sheet, (3) each sheet is numbered and the number of sheets is recorded at the top of this form.

(12/88) This form (E00037) may be obtained from the Order Dept., ASME, 22 Law Drive, Box 2300, Fairfield, NJ 07007-2300 REPRINT 6/93

FORM NPV-1 (BACK - Pg. 2 of 2)

Certificate Holder's Serial No. 96T-001 s/n 9

8. Design conditions 1550 (pressure) psi 575 (temperature) °F or valve pressure class N/A (1)

9. Cold working pressure 3600 psi at 100 °F

10. Hydrostatic test 6575 psi. Disc differential test pressure N/A psi

11. Remarks: Indicator Tube, SA479 316, S/N 5084

Clamp Ring, SA479 XM-19, S/N 532

Flange & Stub End SA182 F316 S/N 17 & 18

CERTIFICATION OF DESIGN

Design Specification certified by Abbas A. Mostala P.E. State WA Reg. No. 28777

Design Report certified by S. Karidas P.E. State NY Reg. No. 056047

CERTIFICATE OF COMPLIANCE

We certify that the statements made in this report are correct and that this pump or valve conforms to the rules for construction of the ASME Code, Section III, Division 1.

N Certificate of Authorization No. N-1947 Expires 12/12/2004

Date 1/22/2004 Name Target Rock (N Certificate Holder) Signed R. E. Glazier, QA Manager (authorized representative)

CERTIFICATE OF INSPECTION

I, the undersigned, holding a valid commission issued by the National Board of Boiler and Pressure Vessel Inspectors and the State of Province of New York and employed by OneBeacon America Insurance Company of Boston, MA have inspected the pump, or valve, described in this Data Report on 01/22/2004 and state that to the best of my knowledge and belief, the Certificate Holder has constructed this pump, or valve, in accordance with the ASME Code, Section III, Division 1.

By signing this certificate, neither the inspector nor his employer makes any warranty, expressed or implied, concerning the component described in this Data Report. Furthermore, neither the inspector nor his employer shall be liable in any manner for any personal injury or property damage or a loss of anykind arising from or connected with this inspection.

Date 01/22/04 Signed (Authorized Inspector) Commissions N.Y. 5102 (Nat'l. Bd. (incl. endorsements) and state or prov. and no.)

(1) For manually operated valves only.

PLAN No 2-2003

ENERGY NORTHWEST
People·Vision·Solutions

FORM NIS-2 OWNER'S REPORT FOR REPAIRS OR REPLACEMENTS
As Required By The Provisions Of The ASME Code Section XI

1. Owner: Energy Northwest
Address: Columbia Generating Station, North Power Plant Loop, Richland, Washington, 99352
2. Plant: Columbia Generating Station
Address: Columbia Generating Station, North Power Plant Loop, Richland, Washington, 99352

Date: 06/15/05
Sheet: 1 Of 1
Unit: Not Applicable

3. (a) Work Performed By: Energy Northwest
(b) Repair Organization P.O. No, Job No, etc.: Energy Northwest
(c) Type Code Symbol Stamp: Not Applicable
(d) Certificate Of Authorization No.: Not Applicable
(e) Expiration Date: Not Applicable
4. Identification Of System: Off Gas (OG) System
5. (a) Applicable Construction Code: ASME Section III, Code Class 3, 1971 Edition with no Addenda*, Code Case: 1519
(b) Applicable Edition Of ASME Section XI Utilized For Repairs Or Replacements: 1989 Edition with no Addenda, Code Case: None
6. Identification Of Components Repaired Or Replaced And Replacement Components

Name Of Component	Name Of Manufacturer	Manufacturer's Serial No	National Board No	Other I.D.	Year Built	Repaired, Replaced Or Replacement	ASME Code Stamped (Yes Or No) Code Class
OG-HX-1B	GE	223717	57776	N/A	1974	----------	Yes, Code Class 3
Tube Bundle	GE**	223717*	57776*	N/A	1974*	Replaced	Yes, Code Class 3
Tube Bundle	US Tool & Die***	501-100-1	3	N/A	2005	Replacement	Yes, Code Class 3

7. Description Of Work Performed: Replaced existing tube bundle for heat exchanger OG-HX-1B. The replacement work was performed as follows:

1) Removed existing tube bundle from the heat exchanger.
2) Performed VT-3 visual examination on the existing studs for cover to channel bolted joint. VT-3 visual examination results acceptable.
3) Performed VT-3 visual examination on the existing nuts for cover to channel bolted joint. VT-3 visual examination results acceptable.
4) Performed VT-3 visual examination on the existing studs for channel to shell bolted joint. VT-3 visual examination results acceptable.
5) Performed VT-3 visual examination on the existing nuts for channel to shell bolted joint. VT-3 visual examination results acceptable.
6) Installed replacement tube bundle in the heat exchanger.
7) Reinstalled VT-3 visually examined existing studs and nuts for the cover to channel bolted joint.
8) Reinstalled VT-3 visually examined existing studs and nuts for the channel to shell bolted joint.
9) Performed VT-2 visual examination during pressure test to confirm pressure boundary integrity of the bolted joints. No evidence of leakage during the pressure test.

NOTES -

1) * ASME Section III, Code Class 3, 1971 Edition with no Addenda for the existing heat exchanger OG-HX-1B, Serial No 223717, National Board No 57776. ASME Section III, Code Class 3, 1971 Edition with Summer 1971 Addenda for the replacement tube bundle Serial No 0501-100-1, National Board No 3.
2) ** The existing tube bundle was removed from the heat exchanger OG-HX-1B, Serial No 223717, National Board No 57776.
3) *** US Tool & Die manufactured the replacement tube bundle for General Electric for installation at Energy Northwest (EN) Columbia Generating Station

PLAN No 2-2003

ENERGY NORTHWEST
People·Vision·Solutions

FORM NIS-2 OWNER'S REPORT FOR REPAIRS OR REPLACEMENTS (Back)

8 Tests Conducted: Hydrostatic [ ] Pneumatic [ ] Nominal Operating Pressure [X] [ ]
Test Pressure: 251 Psig Test Temperature: 340° F
Component Design Pressure: 350 Psig Temperature: 400° F

9. Remarks (Applicable Manufacturer's Data Reports to be attached): 1) See attached N-2 Code Data Report for the replacement tube bundle, Serial No 501-100-1, National Board No 3. 2) Component design pressure of 350 Psig and component design temperature of 400° F is for the shell side of the heat exchanger OG-HX-1B, Serial No 223717, National Board No 57776.

CERTIFICATE OF COMPLIANCE

We certify that the statements made in this Owner's Report are correct and this replacement conforms to the rules of the ASME Code, Section XI.
Type Code Symbol Stamp: Not Applicable
Certificate Of Authorization No.: Not Applicable
Expiration Date: Not Applicable

Prepared By Kuldip Singh - Program Lead Engineer (PLE) Signed By Kuldip Singh - Program Lead Engineer (PLE)
Date 6/15/05 Date 6/15/05

CERTIFICATE OF INSERVICE INSPECTION

I, the undersigned, holding a valid commission issued by the National Board of Boiler and Pressure Vessel Inspectors and the State of Washington and employed by Hartford Steam Boiler Of Connecticut of Hartford, Connecticut have inspected the components described in this Owner's Report during the period 5/28/05 to 6/24/05 and state to the best of my knowledge and belief, the Owner has performed examinations and taken corrective measures described in this Owner's Report in accordance with the requirements of the ASME Code, Section XI.
By signing this certificate neither the Inspector nor his employer makes any warranty, expressed or implied, concerning the examinations and corrective measures described in this Owner's Report. Furthermore, neither the Inspector nor his employer shall be liable in any manner for any personal injury or property damage or a loss of any kind arising from or connected with this inspection.

Inspector's Signature Commissions: 10655W NB10655 A, B, U, T
National Board, State, and Endorsements

Date 6/24/2005

PLAN No. 2-2003
Philip Sapp
6/7/05.

FORM N-2 CERTIFICATE HOLDERS' DATA REPORT FOR IDENTICAL NUCLEAR PARTS AND APPURTENANCES*

As Required by the Provisions of the ASME Code, Section III
Not to Exceed One Day's Production

Pg. 1 of 2

1. Manufactured and certified by U.S. Tool & Die, Inc, Keystone Commons, Bldg 1&2, 200 Braddock Ave. Pittsburgh, PA 15145 (name and address of NPT Certificate Holder)
2. Manufactured for GE Nuclear Energy, Nuclear Services Dept. 175 Curtner Avenue San Jose, CA 95125 (name and address of purchaser)
3. Location of installation Entergy Northwest, Columbia Generating Station, Snake River Complex North Power Loop, Richland, WA 99352 (name and address)
4. Type 161C4711 (drawing no.) TS-SA182 F304 Tube-SA213 316L (mat'l spec. no.) 81,500 84,200 (tensile strength) N/A (CRN) 2005 (year built)
5. ASME Code, Section III, Division 1: 1971 (edition) Summer 1971 (addenda date) 3 (class) N/A (Code Case no.)
6. Fabricated in accordance with Const. Spec. (Div. 2 only) N/A (no.) Revision N/A Date N/A
7. Remarks:
8. Nom. thickness (in.) 5 1/2 Min. design thickness (in.) ---- Dia. ID (ft & in.) 2'5.37" Length overall (ft & in.) 7'3.43"
9. When applicable, Certificate Holders' Data Reports are attached for each item of this report:

Part or Appurtenance Serial Number	National Board No. in Numerical Order
(1) 0501-100-1	RC 4-29-05 ~~05~~ 04-29-05
(2)	
(3)	
(4)	
(5) CG-HX-13	
(6)	
(7)	
(8)	
(9)	
(10)	
(11)	
(12)	
(13)	
(14)	
(15)	
(16)	
(17)	
(18)	
(19)	
(20)	
(21)	
(22)	
(23)	
(24)	
(25)	

Part or Appurtenance Serial Number	National Board No. in Numerical Order
(26)	
(27)	
(28)	
(29)	
(30)	
(31)	
(32)	
(33)	
(34)	
(35)	
(36)	
(37)	
(38)	
(39)	
(40)	
(41)	
(42)	
(43)	
(44)	
(45)	
(46)	
(47)	
(48)	
(49)	
(50)	

Design pressure 1000 psi. Temp. 40-575 °F. Hydro. test pressure 1500 (when applicable) at temp. °F

* Supplemental information in the form of lists, sketches, or drawings may be used provided (1) size is 8½ x 11, (2) information in items 2 and 3 on this Data Report is included on each sheet, (3) each sheet is numbered and the number of sheets is recorded at the top of this form.

(7/98) This form (E00040) may be obtained from the Order Dept., ASME, 22 Law Drive, Box 2300, Fairfield, NJ 07007-2300.

FORM N-2 (Back — Pg 2 of 2)

Certificate Holder's Serial Nos. 0501-100-1 through ---

CERTIFICATION OF DESIGN

Design specifications certified by N/A (when applicable) P.E. State N/A Reg. no. N/A

Design report* certified by N/A (when applicable) P.E. State N/A Reg. no. N/A

CERTIFICATE OF COMPLIANCE

We certify that the statements made in this report are correct and that this (these) Replacement Tube Bundle conforms to the rules of construction of the ASME Code, Section III, Division 1.

NPT Certificate of Authorization No. 2919 Expires 7/23/07

Date 4/29/05 Name U.S. Tool & Die, Inc. (NPT Certificate Holder) Signed [signature] 4-29-05 (authorized representative)

CERTIFICATE OF INSPECTION

I, the undersigned, holding a valid commission issued by the National Board of Boiler and Pressure Vessel Inspectors and the State of Province of PA and employed by ONEBEACON AMERICA INSURANCE COMPANY of BOSTON, MA have inspected these items described in this Data Report on 04-29-2005, and state that to the best of my knowledge and belief, the Certificate Holder has fabricated these parts or appurtenances in accordance with the ASME Code, Section III, Division 1. Each part listed has been authorized for stamping on the date shown above.

By signing this certificate, neither the Inspector nor his employer makes any warranty, expressed or implied, concerning the equipment described in this Data Report. Furthermore, neither the Inspector nor his employer shall be liable in any manner for any personal injury or property damage or loss of any kind arising from or connected with this Inspection.

Date 04-29-2005 Signed [signature] (Authorized Nuclear Inspector) Commissions PA-2646 (Nat'l. Bd. (incl. endorsements) and state or prov. and no.)

PLAN No 2-2004

ENERGY NORTHWEST
People·Vision·Solutions

FORM NIS-2 OWNER'S REPORT FOR REPAIRS OR REPLACEMENTS
As Required By The Provisions Of The ASME Code Section XI

1. Owner: Energy Northwest
Address: Columbia Generating Station, North Power Plant Loop, Richland, Washington, 99352
2. Plant: Columbia Generating Station
Address: Columbia Generating Station, North Power Plant Loop, Richland, Washington, 99352

Date: 07/19/05
Sheet: 1 Of 1
Unit: Not Applicable

3. (a) Work Performed By: Energy Northwest
(b) Repair Organization P.O. No, Job No, etc.: Energy Northwest
(c) Type Code Symbol Stamp: Not Applicable
(d) Certificate Of Authorization No.: Not Applicable
(e) Expiration Date: Not Applicable
4. Identification Of System: Containment Instrument Air (CIA) System
5. (a) Applicable Construction Code: ASME Section III, Code Class 2, 1971 Edition with Winter 1973 Addenda, Code Case: None
(b) Applicable Edition Of ASME Section XI Utilized For Repairs Or Replacements: 1989 Edition with no Addenda, Code Case: None
6. Identification Of Components Repaired Or Replaced And Replacement Components

Name Of Component	Name Of Manufacturer	Manufacturer's Serial No	National Board No	Other I.D.	Year Built	Repaired, Replaced Or Replacement	ASME Code Stamped (Yes Or No) Code Class
CIA(5)-2B	WPPSS*	CIA(5)-2B-P1	N/A	N/A	1983	----------	Yes, Code Class 2

7. Description Of Work Performed: Replaced nuts for the bolted piping flanged joint for flex hose CIA-FLX-2N. The replacement work was performed as follows:

1) Performed VT-3 visual examination on the existing studs for the bolted piping flanged joint. VT-3 visual examination results acceptable.
2) Performed VT-3 visual examination on the existing nuts for the bolted piping flanged joint. VT-3 visual examination results acceptable.
3) Installed new nuts for the bolted piping flanged joint.
4) Performed VT-2 visual examination during pressure test to confirm pressure boundary integrity of the bolted piping flanged joint. No evidence of leakage during the pressure test.

NOTES -

1) * Company name changed from Washington Public Power Supply System (WPPSS) to Energy Northwest in 1999.

PLAN No 2-2004

ENERGY NORTHWEST
People·Vision·Solutions

FORM NIS-2 OWNER'S REPORT FOR REPAIRS OR REPLACEMENTS (Back)

8 Tests Conducted: Hydrostatic [ ] **Pneumatic** [ ] **Nominal Operating Pressure** [X] [ ]

Test Pressure: 187 Psig **Test Temperature:** Ambient

Component Design Pressure: 300 Psig **Temperature:** 340° F

9. Remarks (Applicable Manufacturer's Data Reports to be attached): None

CERTIFICATE OF COMPLIANCE

We certify that the statements made in this Owner's Report are correct and this replacement *conforms to the rules of the ASME Code, Section XI.*

Type Code Symbol Stamp: Not Applicable

Certificate Of Authorization No.: Not Applicable

Expiration Date: Not Applicable

Prepared By Kuldip Singh - Program Lead Engineer (PLE) **Signed By** Kuldip Singh - Program Lead Engineer (PLE)

Date 7/19/05 **Date** 7/19/05

CERTIFICATE OF INSERVICE INSPECTION

I, the undersigned, holding a valid commission issued by the National Board of Boiler and Pressure Vessel Inspectors and the State of Washington *and employed by* Hartford Steam Boiler Of Connecticut of Hartford, Connecticut *have inspected the components described in this Owner's Report during the period* 5-26-2005 *to* 7-21-2005 *and state to the best of my knowledge and belief, the Owner has performed examinations and taken corrective measures described in this Owner's Report in accordance with the requirements of the ASME Code, Section XI.*

By signing this certificate neither the Inspector nor his employer makes any warranty, expressed or implied, concerning the examinations and corrective measures described in this Owner's Report. Furthermore, neither the Inspector nor his employer shall be liable in any manner for any personal injury or property damage or a loss of any kind arising from or connected with this inspection.

Inspector's Signature **Commissions** 1065SW A, B, N, T
National Board, State, and Endorsements

Date 7-21-2005

PLAN No 2-2007

ENERGY NORTHWEST
People·Vision·Solutions

FORM NIS-2 OWNER'S REPORT FOR REPAIRS OR REPLACEMENTS
As Required By The Provisions Of The ASME Code Section XI

Date: 07/19/05
Sheet: 1 Of 1
Unit: Not Applicable

1. **Owner:** Energy Northwest
   Address: Columbia Generating Station, North Power Plant Loop, Richland, Washington, 99352
2. **Plant:** Columbia Generating Station
   Address: Columbia Generating Station, North Power Plant Loop, Richland, Washington, 99352
3. (a) **Work Performed By:** Energy Northwest
   (b) **Repair Organization P.O. No, Job No, etc.:** Energy Northwest
   (c) **Type Code Symbol Stamp:** Not Applicable
   (d) **Certificate Of Authorization No.:** Not Applicable
   (e) **Expiration Date:** Not Applicable
4. **Identification Of System:** Main Steam (MS) System
5. (a) **Applicable Construction Code:** ASME Section III, Code Class 2, 1971 Edition with Winter 1973 Addenda, Code Case: None
   (b) **Applicable Edition Of ASME Section XI Utilized For Repairs Or Replacements:** 1989 Edition with no Addenda, Code Case: None
6. **Identification Of Components Repaired Or Replaced And Replacement Components**

Name Of Component	Name Of Manufacturer	Manufacturer's Serial No	National Board No	Other I.D.	Year Built	Repaired, Replaced Or Replacement	ASME Code Stamped (Yes Or No) Code Class
MS(1)-4D	WPPSS*	MS(1)-4D-P3	N/A	N/A	1983	----------	Yes, Code Class 2

7. **Description Of Work Performed:** Deactivated support MS-1009N by removing both the rigid struts. The work was performed as follows:

   1) Removed both the existing rigid struts.

NOTES -

1) * Company name changed from Washington Public Power Supply System (WPPSS) to Energy Northwest (EN) in 1999.

PLAN No 2-2007

ENERGY NORTHWEST
People·Vision·Solutions

FORM NIS-2 OWNER'S REPORT FOR REPAIRS OR REPLACEMENTS (Back)

8 Tests Conducted: Hydrostatic [ ] Pneumatic [ ] Nominal Operating Pressure [ ] None [X]
Test Pressure: Psig Test Temperature: °F
Component Design Pressure: Psig Temperature: °F

9. Remarks (Applicable Manufacturer's Data Reports to be attached): None

CERTIFICATE OF COMPLIANCE

We certify that the statements made in this Owner's Report are correct and this replacement conforms to the rules of the ASME Code, Section XI.
Type Code Symbol Stamp: Not Applicable
Certificate Of Authorization No.: Not Applicable
Expiration Date: Not Applicable

Prepared By Kuldip Singh - Program Lead Engineer (PLE) Signed By Kuldip Singh - Program Lead Engineer (PLE)

Date 7/19/05 Date 7/19/05

CERTIFICATE OF INSERVICE INSPECTION

I, the undersigned, holding a valid commission issued by the National Board of Boiler and Pressure Vessel Inspectors and the State of Washington and employed by Hartford Steam Boiler Of Connecticut of Hartford, Connecticut have inspected the components described in this Owner's Report during the period 6-8-2005 to 7-21-2005 and state to the best of my knowledge and belief, the Owner has performed examinations and taken corrective measures described in this Owner's Report in accordance with the requirements of the ASME Code, Section XI.
By signing this certificate neither the Inspector nor his employer makes any warranty, expressed or implied, concerning the examinations and corrective measures described in this Owner's Report. Furthermore, neither the Inspector nor his employer shall be liable in any manner for any personal injury or property damage or a loss of any kind arising from or connected with this inspection.

Inspector's Signature Commissions 10655W A,B,N,I
National Board, State, and Endorsements

Date 7-21-2005

PLAN No 2-2009

ENERGY NORTHWEST
People·Vision·Solutions

FORM NIS-2 OWNER'S REPORT FOR REPAIRS OR REPLACEMENTS
As Required By The Provisions Of The ASME Code Section XI

Date: 07/09/05
Sheet: 1 Of 1
Unit: Not Applicable

1. **Owner:** Energy Northwest
   Address: Columbia Generating Station, North Power Plant Loop, Richland, Washington, 99352
2. **Plant:** Columbia Generating Station
   Address: Columbia Generating Station, North Power Plant Loop, Richland, Washington, 99352
3. (a) **Work Performed By:** Energy Northwest
   (b) **Repair Organization P.O. No, Job No, etc.:** Energy Northwest
   (c) **Type Code Symbol Stamp:** Not Applicable
   (d) **Certificate Of Authorization No.:** Not Applicable
   (e) **Expiration Date:** Not Applicable
4. **Identification Of System:** Containment Exhaust Purge (CEP) System
5. (a) **Applicable Construction Code:** ASME Section III, Code Class 2, 1971 Edition with Winter 1973 Addenda, Code Case: None
   (b) **Applicable Edition Of ASME Section XI Utilized For Repairs Or Replacements:** 1989 Edition with no Addenda, Code Case: None
6. **Identification Of Components Repaired Or Replaced And Replacement Components**

Name Of Component	Name Of Manufacturer	Manufacturer's Serial No	National Board No	Other I.D.	Year Built	Repaired, Replaced Or Replacement	ASME Code Stamped (Yes Or No) Code Class
CEP(1)-1A	WPPSS*	CEP(1)-1A-P1	N/A	N/A	1983	----------	Yes, Code Class 2

7. **Description Of Work Performed:** Removed and reinstalled connection with valve CEP-V-800-3 and valve CEP-V-800-4. The work was performed as follows:
   1) Removed connection with valve CEP-V-800-3 and valve CEP-V-800-4.
   2) Reinstalled connection with valve CEP-V-800-3 and valve CEP-V-800-4.
   3) Made required socket weld.
   4) Performed visual examination on the final socket weld. Visual examination results acceptable.
   5) Performed liquid penetrant (PT) examination on the final socket weld. Liquid penetrant (PT) examination results acceptable.

NOTES -

1) * Company name changed from Washington Public Power Supply System (WPPSS) to Energy Northwest (EN) in 1999.

PLAN No 2-2009

ENERGY NORTHWEST
People·Vision·Solutions

FORM NIS-2 OWNER'S REPORT FOR REPAIRS OR REPLACEMENTS (Back)

8 Tests Conducted: Hydrostatic [ ] Pneumatic [ ] Nominal Operating Pressure [ ] None [X]

Test Pressure: Psig — Test Temperature: °F

Component Design Pressure: Psig — Temperature: °F

9. Remarks (Applicable Manufacturer's Data Reports to be attached): None

CERTIFICATE OF COMPLIANCE

We certify that the statements made in this Owner's Report are correct and this repair *conforms to the rules of the ASME Code, Section XI.*

Type Code Symbol Stamp: Not Applicable

Certificate Of Authorization No.: Not Applicable

Expiration Date: Not Applicable

Prepared By Kuldip Singh — Kuldip Singh - Program Lead Engineer (PLE)

Signed By Kuldip Singh — Kuldip Singh - Program Lead Engineer (PLE)

Date 7/14/05 *Date* 7/14/05

CERTIFICATE OF INSERVICE INSPECTION

I, the undersigned, holding a valid commission issued by the National Board of Boiler and Pressure Vessel Inspectors and the State of Washington *and employed by* Hartford Steam Boiler Of Connecticut of Hartford, Connecticut *have inspected the components described in this Owner's Report during the period* 5-31-2005 *to* 7-14-2005 *and state to the best of my knowledge and belief, the Owner has performed examinations and taken corrective measures described in this Owner's Report in accordance with the requirements of the ASME Code, Section XI.*

By signing this certificate neither the Inspector nor his employer makes any warranty, expressed or implied, concerning the examinations and corrective measures described in this Owner's Report. Furthermore, neither the Inspector nor his employer shall be liable in any manner for any personal injury or property damage or a loss of any kind arising from or connected with this inspection.

Inspector's Signature — *Commissions* 10655W A, B, N, I — National Board, State, and Endorsements

Date 7-14-2005

PLAN No 2-2010

ENERGY NORTHWEST
People·Vision·Solutions

FORM NIS-2 OWNER'S REPORT FOR REPAIRS OR REPLACEMENTS
As Required By The Provisions Of The ASME Code Section XI

Date: 07/08/05
Sheet: 1 Of 1
Unit: Not Applicable

1. **Owner:** Energy Northwest
   Address: Columbia Generating Station, North Power Plant Loop, Richland, Washington, 99352
2. **Plant:** Columbia Generating Station
   Address: Columbia Generating Station, North Power Plant Loop, Richland, Washington, 99352
3. **(a) Work Performed By:** Energy Northwest
   (b) Repair Organization P.O. No, Job No, etc.: Energy Northwest
   (c) Type Code Symbol Stamp: Not Applicable
   (d) Certificate Of Authorization No.: Not Applicable
   (e) Expiration Date: Not Applicable
4. **Identification Of System:** Control Rod Drive (CRD) System
5. **(a) Applicable Construction Code:** ASME Section III, Code Class 1, 1971 Edition with Winter 1971 Addenda, Code Case: None
   (b) Applicable Edition Of ASME Section XI Utilized For Repairs Or Replacements: 1989 Edition with no Addenda, Code Case: None
6. **Identification Of Components Repaired Or Replaced And Replacement Components**

Name Of Component	Name Of Manufacturer	Manufacturer's Serial No	National Board No	Other I.D.	Year Built	Repaired, Replaced Or Replacement	ASME Code Stamped (Yes Or No) Code Class
CRD-V-101/3811(I)	Vogt	922-151890	N/A	N/A	1973	----------	Yes, Code Class 1
Wedge (Gate)	Vogt	None	N/A	WAY*	1999	Replacement	Yes, Code Class 1

7. **Description Of Work Performed:** Replaced wedge (gate) for valve CRD-V-101/3811(I), Serial No 922-151890. The replacement work was performed as follows:
   1) Removed existing wedge (gate) from the valve.
   2) Installed new replacement wedge (gate) in the valve.

NOTES -
1) * Material code.

PLAN No 2-2010

ENERGY NORTHWEST
People·Vision·Solutions

FORM NIS-2 OWNER'S REPORT FOR REPAIRS OR REPLACEMENTS (Back)

8 Tests Conducted: Hydrostatic [ ] *Pneumatic* [ ] *Nominal Operating Pressure* [ ] *None* [X]

Test Pressure: Psig *Test Temperature:* °F

Component Design Pressure: Psig *Temperature:* °F

9. Remarks (Applicable Manufacturer's Data Reports to be attached): See attached N-2 Code Data Report for the new replacement wedge (gate) with Material Code WAY.

CERTIFICATE OF COMPLIANCE

We certify that the statements made in this Owner's Report are correct and this replacement *conforms to the rules of the ASME Code, Section XI.*

Type Code Symbol Stamp: Not Applicable

Certificate Of Authorization No.: Not Applicable

Expiration Date: Not Applicable

Prepared By Kuldip Singh *Signed By* Kuldip Singh

Kuldip Singh - Program Lead Engineer (PLE) Kuldip Singh - Program Lead Engineer (PLE)

Date 7/8/05 *Date* 7/8/05.

CERTIFICATE OF INSERVICE INSPECTION

I, the undersigned, holding a valid commission issued by the National Board of Boiler and Pressure Vessel Inspectors and the State of _____ *and employed by* _____ _____ *have inspected the components described in this Owner's Report during the period* _____ *to* _____ *and state to the best of my knowledge and belief, the Owner has performed examinations and taken corrective measures described in this Owner's Report in accordance with the requirements of the ASME Code, Section XI.*

By signing this certificate neither the Inspector nor his employer makes any warranty, expressed or implied, concerning the examinations and corrective measures described in this Owner's Report. Furthermore, neither the Inspector nor his employer shall be liable in any manner for any personal injury or property damage or a loss of any kind arising from or connected with this inspection.

Not Required - Replacement 1" NPS And Smaller *Commissions* _____

Inspector's Signature National Board, State, and Endorsements

Date _____

PLAN No. 2-2010

FORM N-2 MANUFACTURERS DATA REPORT FOR NUCLEAR PART AND APPURTENANCES*

As required by the Provisions of the ASME Code Rules

7/8/05

1. (a) Manufactured by EDWARD VOGT VALVE COMPANY, LOUISVILLE, KY
(Name and address of Manufacturer of part)

(b) Manufactured for WASHINGTON PUBLIC POWER SUPPLY SYSTEM, RICHLAND, WA
(Name and address of Manufacturer of completed nuclear component)

2. Identification-Manufacturer's Serial No. of Part PN 115638 Nat'l Bd. No. ---

(a) Constructed According to Drawing No. E-40508, Rev. 16 Drawing Prepared by Edward Vogt Valve Company

(b) Description of Part Inspected Material Code WAY - SA479 T410 (Chem only)

(c) Applicable ASME Code: Section III, Edition 1971 thru W'72, Addenda date ---, Case No. --- Class 1

3. Remarks: REPLACEMENT PARTS FOR GATE VALVE
(Brief description of service for which component was designed)

ORDER 218012 - 7 pcs.

We certify that the statements made in this report are correct and this vessel part or appurtenance as defined in the Code conforms to the rules of construction of the ASME Code Section III.
(The applicable Design Specification and Stress Report are not the responsibility of the part Manufacturer. An appurtenance Manufacturer is responsible for furnishing a separate Design Specification and Stress Report if the appurtenance is not included in the component Design Specification and Stress Report.)

Date 7/19 19 99 Signed EDWARD VOGT VALVE COMPANY By 23-FEB-99
(Manufacturer)

Certificate of Authorization Expires 1/6/2002 Certificate of Authorization No. N-948

CERTIFICATION OF DESIGN FOR APPURTENANCE (when applicable)

Design information on file at

Stress analysis report on file at

Design specifications certified by Prof. Eng. State Reg. No.

Stress analysis report certified by Prof. Eng. State Reg. No.

CERTIFICATE OF SHOP INSPECTION

I, the undersigned, holding a valid commission issued by the National Board of Boiler and Pressure Vessel Inspectors and/or the State or Province of INDIANA and employed by COMMERCIAL UNION INS. CO. of BOSTON, MA have inspected the part of a pressure vessel described in this Manufacturer's Partial Data Report on 2/23 19 99, and state that to the best of my knowledge and belief, the Manufacturer has constructed this part in accordance with the ASME Code Section III.

By signing this certificate, neither the Inspector nor his employer makes any warranty, expressed or implied, concerning the part described in this Manufacturer's Partial Data Report. Furthermore, neither the Inspector nor his employer shall be liable in any manner for any personal injury or property damage or a loss of any kind arising from or connected with this inspection.

Date 2/23 19 99

Inspector's Signature CUI Commissions IN 1713
National Board, State, Province and No.

*Supplemental sheets in form of lists, sketches or drawings may be used provided (1) size is 8½" x 11", (2) information in items 1-2 on this data report is included on each sheet, and (3) each sheet is numbered and number of sheets is recorded in item 3, "Remarks".

PLAN No 2-2011

ENERGY NORTHWEST
People·Vision·Solutions

FORM NIS-2 OWNER'S REPORT FOR REPAIRS OR REPLACEMENTS
As Required By The Provisions Of The ASME Code Section XI

Date: 07/21/05
Sheet: 1 Of 1
Unit: Not Applicable

1. **Owner:** Energy Northwest
   Address: Columbia Generating Station, North Power Plant Loop, Richland, Washington, 99352
2. **Plant:** Columbia Generating Station
   Address: Columbia Generating Station, North Power Plant Loop, Richland, Washington, 99352
3. (a) **Work Performed By:** Energy Northwest
   (b) **Repair Organization P.O. No, Job No, etc.:** Energy Northwest
   (c) **Type Code Symbol Stamp:** Not Applicable
   (d) **Certificate Of Authorization No.:** Not Applicable
   (e) **Expiration Date:** Not Applicable
4. **Identification Of System:** Containment Vacuum Breaker (CVB) System
5. (a) **Applicable Construction Code:** ASME Section III, Code Class 2, 1974 Edition with Summer 1975 Addenda, Code Case: None
   (b) **Applicable Edition Of ASME Section XI Utilized For Repairs Or Replacements:** 1989 Edition with no Addenda, Code Case: None
6. **Identification Of Components Repaired Or Replaced And Replacement Components**

Name Of Component	Name Of Manufacturer	Manufacturer's Serial No	National Board No	Other I.D.	Year Built	Repaired, Replaced Or Replacement	ASME Code Stamped (Yes Or No) Code Class
CVB-V-1NP	A/G*	VB 7897	N/A	N/A	1983	----------	Yes, Code Class 2
Rear Snubber	Pacific Scientific	30921	N/A	N/A	-------	Replaced	No, Code Class 1
Rear Snubber	Pacific Scientific	30920	N/A	N/A	-------	Replacement	No, Code Class 1

7. **Description Of Work Performed:** Replaced rear snubber for Containment Vacuum Breaker (CVB) valve CVB-V-1NP. The replacement work was performed as follows:
   1) Removed existing rear snubber Serial No 30921 from the valve.
   2) Installed new replacement rear snubber Serial No 30920 for the valve.

NOTES -

1) * Anderson Greenwood.
2) ASME Section III, Code Class 2 for valve CVB-V-1NP, Serial No VB 7897.
3) ASME Section III, Code Class NF(1) for snubber Serial No 30920. ASME Section III, Code Class NF(1) snubber for ASME Section III, Code Class NF(2) application.

PLAN No 2-2011

ENERGY NORTHWEST
People·Vision·Solutions

FORM NIS-2 OWNER'S REPORT FOR REPAIRS OR REPLACEMENTS (Back)

8 Tests Conducted: Hydrostatic [ ] Pneumatic [ ] Nominal Operating Pressure [ ] None [X]
Test Pressure: Psig Test Temperature: °F
Component Design Pressure: Psig Temperature: °F

9. Remarks (Applicable Manufacturer's Data Reports to be attached): None

CERTIFICATE OF COMPLIANCE

We certify that the statements made in this Owner's Report are correct and this replacement conforms to the rules of the ASME Code, Section XI.
Type Code Symbol Stamp: Not Applicable
Certificate Of Authorization No.: Not Applicable
Expiration Date: Not Applicable

Prepared By Kuldip Singh - ~~Program~~ Lead Engineer (PLE) Signed By Kuldip Singh - ~~Program~~ Lead Engineer (PLE)

Date 7/21/05 Date 7/21/05

CERTIFICATE OF INSERVICE INSPECTION

I, the undersigned, holding a valid commission issued by the National Board of Boiler and Pressure Vessel Inspectors and the State of Washington and employed by Hartford Steam Boiler Of Connecticut of Hartford, Connecticut have inspected the components described in this Owner's Report during the period 6-2-2005 to 7-22-2005 and state to the best of my knowledge and belief, the Owner has performed examinations and taken corrective measures described in this Owner's Report in accordance with the requirements of the ASME Code, Section XI.
By signing this certificate neither the Inspector nor his employer makes any warranty, expressed or implied, concerning the examinations and corrective measures described in this Owner's Report. Furthermore, neither the Inspector nor his employer shall be liable in any manner for any personal injury or property damage or a loss of any kind arising from or connected with this inspection.

Inspector's Signature Commissions 10655W A, B, N, I
National Board, State, and Endorsements

Date 7-22-2005

PLAN No 2-2012

ENERGY NORTHWEST
People·Vision·Solutions

FORM NIS-2 OWNER'S REPORT FOR REPAIRS OR REPLACEMENTS
As Required By The Provisions Of The ASME Code Section XI

1. Owner: Energy Northwest
Address: Columbia Generating Station, North Power Plant Loop, Richland, Washington, 99352
2. Plant: Columbia Generating Station
Address: Columbia Generating Station, North Power Plant Loop, Richland, Washington, 99352

Date: 06/26/05
Sheet: 1 Of 1
Unit: Not Applicable

3. (a) Work Performed By: Energy Northwest
(b) Repair Organization P.O. No, Job No, etc.: Energy Northwest
(c) Type Code Symbol Stamp: Not Applicable
(d) Certificate Of Authorization No.: Not Applicable
(e) Expiration Date: Not Applicable
4. Identification Of System: High Pressure Core Spray (HPCS) System
5. (a) Applicable Construction Code: ASME Section III, Code Class 2, 1971 Edition with Winter 1973 Addenda, Code Case: None
(b) Applicable Edition Of ASME Section XI Utilized For Repairs Or Replacements: 1989 Edition with no Addenda, Code Case: None
6. Identification Of Components Repaired Or Replaced And Replacement Components

Name Of Component	Name Of Manufacturer	Manufacturer's Serial No	National Board No	Other I.D.	Year Built	Repaired, Replaced Or Replacement	ASME Code Stamped (Yes Or No) Code Class
HPCS(3)-1	WPPSS*	HPCS(3)-1	N/A	N/A	1983	----------	Yes, Code Class 2

7. Description Of Work Performed: Fabricated/machined and replaced existing orifice plate for HPCS-RO-6. The replacement work was performed as follows:

1) Fabricated/machined the orifice plate and the handle (paddle) to the final dimensions.
2) Welded the handle (paddle) to the orifice plate.
3) Performed visual examination on the final weld. Visual examination results acceptable.
4) Final finished the orifice plate surfaces.
5) Marked the required information on the inlet face of the handle (paddle).
6) Removed existing studs and nuts.
7) Removed existing restricting orifice plate.
8) Installed replacement restricting orifice plate.
9) Installed replacement studs.
10) Installed replacement nuts.
11) Performed VT-2 visual examination during pressure test to confirm pressure boundary integrity of the joints. No evidence of leakage during the pressure test.

NOTES -

1) * Company name changed from Washington Public Power Supply System (WPPSS) to Energy Northwest (EN) in 1999.

PLAN No 2-2012

ENERGY NORTHWEST
People·Vision·Solutions

FORM NIS-2 OWNER'S REPORT FOR REPAIRS OR REPLACEMENTS (Back)

8 Tests Conducted: Hydrostatic [ ] Pneumatic [ ] Nominal Operating Pressure [X] None [ ]

Test Pressure: 1310 Psig* **Test Temperature:** 74° F

Component Design Pressure: 100 Psig **Temperature:** 212° F

9. Remarks (Applicable Manufacturer's Data Reports to be attached): * The system nominal operating pressure was recorded from a pressure gauge installed at HPCS-PX-3. The system nominal operating pressure in minimum flow mode is approximately 1300 psig It is recognized that the system nominal operating pressure at HPCS-RO-6 is reduced since the minimum flow is restricted by HPCS-RO-1, HPCS-RO-5, HPCS-RO-6 and HPCS-RO-7.

CERTIFICATE OF COMPLIANCE

We certify that the statements made in this Owner's Report are correct and this replacement *conforms to the rules of the ASME Code, Section XI.*

Type Code Symbol Stamp: Not Applicable

Certificate Of Authorization No.: Not Applicable

Expiration Date: Not Applicable

Prepared By Kuldip Singh - Program Lead Engineer (PLE) **Signed By** Kuldip Singh - Program Lead Engineer (PLE)

Date 6/26/05 **Date** 6/26/05

CERTIFICATE OF INSERVICE INSPECTION

I, the undersigned, holding a valid commission issued by the National Board of Boiler and Pressure Vessel Inspectors and the State of Washington *and employed by* Hartford Steam Boiler Of Connecticut of Hartford, Connecticut *have inspected the components described in this Owner's Report during the period* 6/4/2005 *to* 6/29/2005 *and state to the best of my knowledge and belief, the Owner has performed examinations and taken corrective measures described in this Owner's Report in accordance with the requirements of the ASME Code, Section XI.*

By signing this certificate neither the Inspector nor his employer makes any warranty, expressed or implied, concerning the examinations and corrective measures described in this Owner's Report. Furthermore, neither the Inspector nor his employer shall be liable in any manner for any personal injury or property damage or a loss of any kind arising from or connected with this inspection.

Inspector's Signature **Commissions** 10655W A, B, N, I
National Board, State, and Endorsements

Date 6/29/2005

PLAN No 2-2014

ENERGY NORTHWEST
People·Vision·Solutions

FORM NIS-2 OWNER'S REPORT FOR REPAIRS OR REPLACEMENTS
As Required By The Provisions Of The ASME Code Section XI

Date: 07/15/05
Sheet: 1 Of 1
Unit: Not Applicable

1. **Owner:** Energy Northwest
   Address: Columbia Generating Station, North Power Plant Loop, Richland, Washington, 99352
2. **Plant:** Columbia Generating Station
   Address: Columbia Generating Station, North Power Plant Loop, Richland, Washington, 99352
3. **(a) Work Performed By:** Energy Northwest
   (b) Repair Organization P.O. No, Job No, etc.: Energy Northwest
   (c) Type Code Symbol Stamp: Not Applicable
   (d) Certificate Of Authorization No.: Not Applicable
   (e) Expiration Date: Not Applicable
4. **Identification Of System:** Service Water (SW) System
5. **(a) Applicable Construction Code:** ASME Section III, Code Class 3, 1971 Edition with Winter 1973 Addenda, Code Case: None
   (b) Applicable Edition Of ASME Section XI Utilized For Repairs Or Replacements: 1989 Edition with no Addenda, Code Case: None
6. **Identification Of Components Repaired Or Replaced And Replacement Components**

Name Of Component	Name Of Manufacturer	Manufacturer's Serial No	National Board No	Other I.D.	Year Built	Repaired, Replaced Or Replacement	ASME Code Stamped (Yes Or No) Code Class
SW(1)-2UG	WPPSS*	SW(1)-2UG-P1	N/A	N/A	1983	----------	Yes, Code Class 3
SW-P-1A	Byron Jackson	731-S-0012	N/A	N/A	1975	Replaced	Yes, Code Class 3
SW-P-1A	BW/IP**	94-WS-0035	N/A	N/A	1995	Replacement	Yes, Code Class 3

7. **Description Of Work Performed:** Replaced existing pump SW-P-1A. The replacement work was performed as follows:
   1) Removed existing pump SW-P-1A, Serial No 731-S-0012.
   2) Performed VT-3 visual examination on the existing studs for the pump discharge bolted joint. VT-3 visual examination results acceptable.
   3) Performed VT-3 visual examination on the existing nuts for the pump discharge bolted joint. VT-3 visual examination results acceptable.
   4) Installed replacement pump SW-P-1A, Serial No 94-WS-0035.
   5) Reinstalled VT-3 visually examined existing studs for the pump discharge bolted joint. VT-3 visual examination results acceptable.
   6) Reinstalled VT-3 visually examined existing nuts for the pump discharge bolted joint. VT-3 visual examination results acceptable.
   7) Removed pipe supports from the existing discharge head and welded to the replacement discharge head.
   8) Performed visual examination on the final welds. Visual examination results acceptable.
   9) Performed VT-2 visual examination during pressure test to confirm pressure boundary integrity of the pump discharge bolted joint. No evidence of leakage during the pressure test.

NOTES -

1) * Company name changed from Washington Public Power Supply System (WPPSS) to Energy Northwest (EN) in 1999.
2) ** Byron Jackson pumps are now being manufactured by BW/IP International (Flowserve).
3) The existing ASME Code Stamped piping system in which the replacement pump SW-P-1A, Serial No 94-WS-0035 was installed is Service Water (SW) piping system SW(1)-2UG-P1. This piping system is certified to comply with ASME Section III, Code Class 3, 1971 Edition with Winter 1973 Addenda requirements.
4) The replacement pump SW-P-1A, Serial No 94-WS-0035 is certified to comply with as follows:
   ASME Section III, Code Class 3, 1971 Edition with Winter 1971 Addenda for design and stamping.
   ASME Section III, Code Class 3, 1986 Edition with no Addenda for fabrication and examination.
   ASME Section II, 1986 Edition no Addenda for materials.

PLAN No 2-2014

ENERGY NORTHWEST
People·Vision·Solutions

FORM NIS-2 OWNER'S REPORT FOR REPAIRS OR REPLACEMENTS (Back)

8 Tests Conducted: Hydrostatic [ ] **Pneumatic** [ ] **Nominal Operating Pressure** [X] [ ]

Test Pressure: 215 Psig **Test Temperature:** 66° F

Component Design Pressure: 309 Psig **Temperature:** 150° F

9. Remarks (Applicable Manufacturer's Data Reports to be attached): See attached Code Data Reports for the replacement pump and N-2 Code Data Report for the replacement parts and appurtenances:
1) NPV-1 Code Data Report for the replacement pump SW-P-1A, Serial No 94-WS-0035. 2) N-2 Code Data Reports for the following replacement parts and appurtenances such as bottom column, intermediate column, top column and discharge head:

Serial No	National Board No
NP-95-024	2231
NP-95-025	2232
NP-95-026	2233
NP-95-027	2234

3) Component design pressure of 309 Psig and design temperature of 150° F is for the Service Water (SW) piping system SW(1)-2UG-P1.

CERTIFICATE OF COMPLIANCE

We certify that the statements made in this Owner's Report are correct and this replacement *conforms to the rules of the ASME Code, Section XI.*
Type Code Symbol Stamp: Not Applicable
Certificate Of Authorization No.: Not Applicable
Expiration Date: Not Applicable

Prepared By Kuldip Singh - Program Lead Engineer (PLE) **Signed By** Kuldip Singh - Program Lead Engineer (PLE)

Date 7/15/05 **Date** 7/15/05.

CERTIFICATE OF INSERVICE INSPECTION

I, the undersigned, holding a valid commission issued by the National Board of Boiler and Pressure Vessel Inspectors and the State of Washington *and employed by* Hartford Steam Boiler Of Connecticut of Hartford, Connecticut *have inspected the components described in this Owner's Report during the period* 6-17-2005 *to* 7-19-2005 *and state to the best of my knowledge and belief, the Owner has performed examinations and taken corrective measures described in this Owner's Report in accordance with the requirements of the ASME Code, Section XI.*
By signing this certificate neither the Inspector nor his employer makes any warranty, expressed or implied, concerning the examinations and corrective measures described in this Owner's Report. Furthermore, neither the Inspector nor his employer shall be liable in any manner for any personal injury or property damage or a loss of any kind arising from or connected with this inspection.

Inspector's Signature **Commissions** 10655W A, B, N, E
National Board, State, and Endorsements

Date 7-19-2005

PLAN No. 2-2014

FORM NPV-1 CERTIFICATE HOLDERS' DATA REPORT FOR NUCLEAR PUMPS OR VALVES*

As Required by the Provisions of the ASME Code, Section III, Division 1

1. Manufactured and certified by BW/IP INTERNATIONAL, INC., PUMP DIVISION, LOS ANGELES OPERATIONS 2300 EAST VERNON AVE., VERNON, CA. 90058 (name and address of N Certificate Holder)
2. Manufactured for WASHINGTON PUBLIC POWER SUPPLY SYSTEM 3000 GEORGE WASHINGTON WY., RICHLAND, WA. 99352 (name and address of Purchaser)
3. Location of installation WASHINGTON PUBLIC POWER SUPPLY SYSTEM WNP-2, NORTH POWER PLANT LOOP, RICHLAND, WA. 99352 (name and address)
4. Model No., Series No., or Type 28 KXH 3 STG VCT Drawing L002023 Rev. A CRN N/A
5. ASME Code, Section III, Division 1: SEE REMARKS (edition) SEE REMARKS (addenda date) 3 (class) N/A (Code Case no.)
6. Pump or valve PUMP Nominal inlet size N/A (in.) Outlet size 19.00 (in.)
7. Material: Body N/A Bonnet N/A Disk N/A Bolting N/A

(a) Cert. Holder's Serial No.	(b) Nat'l Board No.	(c) Body Serial No.	(d) Bonnet Serial No.	(e) Disk Serial No.
94-WS-0035	N/A	N/A	N/A	N/A

PUMP SW-P-1A, S/N 94-WS-0035

*Supplemental information in form of lists, sketches, or drawings may be used provided (1) size is 8½ × 11, (2) information in items 1 through 4 on this Data Report is included on each sheet, (3) each sheet is numbered and the number of sheets is recorded at the top of this form.

Certificate Holder's Serial No. 94-WS-0035

8. Design conditions 300 (pressure) psi 150 (temperature) °F or valve pressure class N/A (1)

9. Cold working pressure N/A psi at 100°F

10. Hydrostatic test 450 psi. Disk differential test pressure N/A psi

11. Remarks:
1. ASME SECTION III, 1971 EDITION, WINTER 1971 ADDENDA FOR DESIGN AND STAMPING
2. ASME SECTION III, 1986 EDITION WITHOUT ADDENDA FOR FABRICATION AND EXAMINATION
3. ASME SECTION II, PARTS A & C, 1986 EDITION WITHOUT ADDENDA FOR MATERIALS

CERTIFICATION OF DESIGN

Design Specification certified by * DAVID L. MURPHY P.E. State WA. Reg. no. 12542
Design Report certified by ** DOUGLAS B. NICKERSON P.E. State CA. Reg. no. 1314

* WITH SUBSTITUTION EVALUATION NO. 2083-R1, CERTIFIED BY JACK R. COLE, P.E., WA. REG. NO. 20653
** WITH ADDENDA NO. 1, CERTIFIED BY CARL REIMERS, P.E., CA. REG. NO. M018283

CERTIFICATE OF COMPLIANCE

We certify that the statements made in this report are correct and that this pump or valve conforms to the rules for construction of the ASME Code, Section III, Division 1.

N Certificate of Authorization No. N-1130 Expires JUNE 10, 1996

Date JUNE 29, 1995 Name BW/IP INTERNATIONAL, INC. (N Certificate Holder) Signed (authorized representative)

CERTIFICATE OF INSPECTION

I, the undersigned, holding a valid commission issued by the National Board of Boiler and Pressure Vessel Inspectors and the State or Province of CALIFORNIA and employed by *ARKWRIGHT MUTUAL INS. CO. of NORWOOD, MASS. have inspected the pump, or valve, described in this Data Report on 6/30/95, and state that to the best of my knowledge and belief, the Certificate Holder has constructed this pump, or valve, in accordance with the ASME Code, Section III, Division 1.

* FACTORY MUTUAL ENGINEERING ASSOCIATION

By signing this certificate, neither the inspector nor his employer makes any warranty, expressed or implied, concerning the component described in this Data Report. Furthermore, neither the inspector nor his employer shall be liable in any manner for any personal injury or property damage or a loss of any kind arising from or connected with this inspection.

Date 6/30/95 Signed (Authorized Inspector) Commissions CA-1864 (Nat'l. Bd. (incl. endorsements) and state or prov. and no.)

(1) For manually operated valves only.

PLAN No. 2-2014

SERIAL NO 94-WS-0035

FORM NPV-1 CERTIFICATE HOLDER'S DATA REPORT
SUPPLEMENTARY SHEET

7/15/95

1. Manufactured and certified by BW/IP INTERNATIONAL, INC. PUMP DIVISION LOS ANGELES OPERATIONS 2300 EAST VERNON AVENUE, VERNON, CA 90058
(name and address of Certificate Holder)

2. Manufactured for WASHINGTON PUBLIC POWER SUPPLY SYSTEM 3000 GEORGE WASHINGTON WY. RICHLAND, WASHINGTON 99352
(name and address of Purchaser)

3. Location of Installation WASHINGTON PUBLIC POWER SUPPLY SYSTEM WNP-2, NORTH POWER PLANT LOOP, RICHLAND, WASHINGTON 99352
(name and address)

4. Model No: 28 KXH 3 STAGE VCT Drawing No: L002023 Part Name: PUMP

ROUTE CARD NO.	REF. NO.	PART NAME	PART NO.	MATERIAL
314152	N/A	PUMP ASSEMBLY	7011676	SEE BELOW
CONSISTING OF THE FOLLOWING PRESSURE BOUNDARY COMPONENTS:				
311639	076	TOP CASE	7011454	ASME SA-216 GR. WCB
311637	078	SERIES CASE	7011452	ASME SA-216 GR. WCB
311638	078-1	SERIES CASE	7011452	ASME SA-216 GR. WCB
314602	422	BOTTOM COLUMN	7011549	N-2 DATA REPORT
314600	420	INTERMEDIATE COLUMN	7011548	N-2 DATA REPORT
314601	419	TOP COLUMN	7011548	N-2 DATA REPORT
314599	465	DISCHARGE HEAD	7011546	N-2 DATA REPORT
311635	086	SUCTION BELL	7011450	ASME SA-216 GR. WCB
311702	050	STUFFING BOX	7011462	ASME SA-351 GR. CF3
311396 312979 313181	002-1	CASE STUD	7011558	ASME SA-193 GR. B7
311397	003-1	HEX NUT-CASE COLUMN	7011559	ASME SA-194 GR. 7
311395	002-2	STUD-SUCTION BELL	7011563	ASME SA-193 GR. B7
311466	806-1	HEX CAP SCREW, CASE COLUMN	7011561	ASME SA-193 GR. B7
311463	806-2	HEX CAP SCREW, COLUMN	7011562	ASME SA-193 GR. B7
311455	002-3	STUD-STUFF BOX TO HEAD	7011560	ASME SA-193 GR. B7
311456	003-2	HEX NUT-STUFF BOX TO HEAD	7011564	ASME SA-194 GR. 7

5-30-95
Authorized Representative Date

6/30/95
Authorized Inspector Date

PLAN NO. 2-2014

FORM N-2 CERTIFICATE HOLDERS' DATA REPORT FOR IDENTICAL NUCLEAR PARTS AND APPURTENANCES*

As Required by the Provisions of the ASME Code, Section III
Not to Exceed One Day's Production

1. Manufactured and certified by HYUNDAI HEAVY INDUSTRIES CO., LTD. NUCLEAR POWER DIVISION 1, JEONHA-DONG, ULSAN, KYUNG NAM, KOREA 682-792
(name and address of NPT Certificate Holder)

2. Manufactured for BW/IP INTERNATIONAL, INC. PUMP DIVISION 2300 EAST VERNON AVE. VERNON, CA. 90058
(name and address of Purchaser)

3. Location of installation WASHINGTON PUBLIC POWER SUPPLY SYSTEM NORTH POWER PLANT LOOP, RICHLAND, WA. 99352
(name and address)

4. Type: N280201-4P030010I REV.2 (drawing no.) SA516-70 (mat'l. spec. no.) 70 KSI (tensile strength) N/A (CRN) 1995 (year built)

5. ASME Code, Section III, Division 1: SEE REMARKS (edition) (addenda date) 3 (class) N/A (Code Case no.)

6. Fabricated in accordance with Const. Spec. (Div. 2 only) N/A (no.) Revision N/A Date N/A

7. Remarks:
1. ASME SECT. III, 1971 EDITION INCLUDING WINTER A71 FOR STAMPING AND DESIGN REQUIREMENTS.
2. ASME SECT. III, 1986 EDITION WITHOUT ADDENDA FOR FABRICATION AND EXAMINATION.
3. ASME SECT. II, PART A AND C, 1986 EDITION WITHOUT ADDENDA FOR MATERIAL.

8. Nom. thickness (in.) 0.5" Min. design thickness (in.) 0.410" Dia. ID (ft & in.) 37.0" Length overall (ft & in.) 72"

9. When applicable, Certificate Holders' Data Reports are attached for each item of this report:

Part or Appurtenance Serial Number	National Board No. in Numerical Order	Part or Appurtenance Serial Number	National Board No. in Numerical Order
(1) NP-95-024	2231	(26)	
(2)		(27)	
(3)		(28)	
(4)		(29)	
(5)		(30)	
(6)		(31)	
(7)		(32)	
(8)		(33)	
(9)		(34)	
(10)		(35)	
(11)		(36)	
(12)		(37)	
(13)		(38)	
(14)		(39)	
(15)		(40)	
(16)		(41)	
(17)		(42)	
(18)		(43)	
(19)		(44)	
(20)		(45)	
(21)		(46)	
(22)		(47)	
(23)		(48)	
(24)		(49)	
(25)		(50)	

10. Design pressure 300 psi. Temp. 150 °F. Hydro. test pressure 450 PSI. (when applicable) at temp. 60 °F. HYDROSTATIC TEST. °F

*Supplemental information in the form of lists, sketches, or drawings may be used provided (1) size is 8½ x 11, (2) information in items 2 and 3 on this Data Report is included on each sheet, (3) each sheet is numbered and the number of sheets is recorded at the top of this form.

(12/88) This form (E00040) may be obtained from the Order Dept., ASME, 22 Law Drive, Box 2300, Fairfield, NJ 07007-2300.

Certificate Holder's Serial Nos. NP-95-024 through -

CERTIFICATION OF DESIGN

Design specifications certified by N/A (when applicable) P.E. State _____ Reg. no. _____

Design report* certified by N/A (when applicable) P.E. State _____ Reg. no. _____

CERTIFICATE OF COMPLIANCE

We certify that the statements made in this report are correct and that this (these) HEAD conforms to the rules of construction of the ASME Code, Section III, Division 1.

NPT Certificate of Authorization No. N-2851 Expires AUG. 16, 1997

Date APR. 18, 1995 Name HYUNDAI HEAVY INDUSTRIES CO., LTD. NUCLEAR POWER DIVISION (NPT Certificate Holder) Signed [signature] (Authorized representative) MANAGER

CERTIFICATE OF INSPECTION

I, the undersigned, holding a valid commission issued by the National Board of Boiler and Pressure Vessel Inspectors and the State or Province of ILLINOIS and employed by H.S.B.I. & I. CO. of HARTFORD, CT. have inspected these items described in this Data Report on April 20, 1995, and state that to the best of my knowledge and belief, the Certificate Holder has fabricated these parts or appurtenances in accordance with the ASME Code, Section III, Division 1. Each part listed has been authorized for stamping on the date shown above.

By signing this certificate, neither the inspector nor his employer makes any warranty, expressed or implied, concerning the equipment described in the Data Report. Furthermore, neither the inspector nor his employer shall be liable in any manner for any personal injury or property damage or loss of any kind arising from or connected with this inspection.

Date 4/20/1995 Signed [signature] (Authorized Inspector) Commissions NB10128 N. B. (Nat'l. Bd. (incl. endorsements) and no.)

(2)

PLAN NO. 2-2014

Dilip Singh 7/15/05

FORM N-2 CERTIFICATE HOLDERS' DATA REPORT FOR IDENTICAL NUCLEAR PARTS AND APPURTENANCES*

As Required by the Provisions of the ASME Code, Section III

Not to Exceed One Day's Production

1. Manufactured and certified by HYUNDAI HEAVY INDUSTRIES CO., LTD. NUCLEAR POWER DIVISION 1, JEONHA-DONG, USAN, KYUG NAM, KOREA 682-792
(name and address of NPT Certificate Holder)

2. Manufactured for BW/IP INTERNATIONAL, INC. PUMP DIVISION 2300 EAST VERNON AVE. VERNON, CA. 90058
(name and address of Purchaser)

3. Location of installation WASHINGTON PUBLIC POWER SUPPLY SYSTEM NORTH POWER PLANT LOOP, RICHLAND, WA. 99352
(name and address)

4. Type: N280201-4F0300301 REV.2 (drawing no.) | SA516-70 (mat'l. spec. no.) | 70 KSI (tensile strength) | N/A (CRN) | 1995 (year built)

5. ASME Code, Section III, Division 1: SEE REMARKS (edition) | (addenda date) | 3 (class) | N/A (Code Case no.)

6. Fabricated in accordance with Const. Spec. (Div. 2 only) N/A (no.) Revision N/A Date N/A

7. Remarks:
1. ASME SECT. III, 1971 EDITION INCLUDING WINTER A71 FOR STAMPING AND DESIGN REQUIREMENTS.
2. ASME SECT. III, 1986 EDITION WITHOUT ADDENDA FOR FABRICATION AND EXAMINATION.
3. ASME SECT. II, PART A AND C, 1986 EDITION WITHOUT ADDENDA FOR MATERIAL.

8. Nom. thickness (in.) 0.5" Min. design thickness (in.) 0.340" Dia. ID (ft & in.) 21" Length overall (ft & in.) 98.251"

9. When applicable, Certificate Holders' Data Reports are attached for each item of this report:

	Part or Appurtenance Serial Number	National Board No. in Numerical Order		Part or Appurtenance Serial Number	National Board No. in Numerical Order
(1)	NP-95-025	2232	(26)		
(2)	NP-95-026	2233	(27)		
(3)			(28)		
(4)			(29)		
(5)			(30)		
(6)			(31)		
(7)			(32)		
(8)			(33)		
(9)			(34)		
(10)			(35)		
(11)			(36)		
(12)			(37)		
(13)			(38)		
(14)			(39)		
(15)			(40)		
(16)			(41)		
(17)			(42)		
(18)			(43)		
(19)			(44)		
(20)			(45)		
(21)			(46)		
(22)			(47)		
(23)			(48)		
(24)			(49)		
(25)			(50)		

10. Design pressure 300 psi. Temp. 150 °F. Hydro. test pressure 450 PSI (when applicable) at temp. 60 °F. HYDROSTATIC TEST

* Supplemental information in the form of lists, sketches, or drawings may be used provided (1) size is 8½ x 11, (2) information in items 2 and 3 on this Data Report is included on each sheet, (3) each sheet is numbered and the number of sheets is recorded at the top of this form.

(12/88) This form (E00040) may be obtained from the Order Dept., ASME, 22 Law Drive, Box 2300, Fairfield, NJ 07007-2300.

Reprint (7/91)

Certificate Holder's Serial Nos. NP-95-025 through NP-95-026

CERTIFICATION OF DESIGN

Design specifications certified by N/A (when applicable) P.E. State _____ Reg. no. _____

Design report* certified by N/A (when applicable) P.E. State _____ Reg. no. _____

CERTIFICATE OF COMPLIANCE

We certify that the statements made in this report are correct and that this (these) COLUMN conforms to the rules of construction of the ASME Code, Section III, Division 1.

NPT Certificate of Authorization No. N-2851 Expires AUG. 16, 1997

Date APR. 18, 1995 Name HYUNDAI HEAVY INDUSTRIES CO., LTD. NUCLEAR POWER DIVISION (NPT Certificate Holder) Signed [signature] (authorized representative) MANAGER

CERTIFICATE OF INSPECTION

I, the undersigned, holding a valid commission issued by the National Board of Boiler and Pressure Vessel Inspectors and the State or Province of ILLINOIS and employed by H.S.B.I. & I. CO. of HARTFORD, CT. have inspected these items described in this Data Report on April 20, 1995, and state that to the best of my knowledge and belief, the Certificate Holder has fabricated these parts or appurtenances in accordance with the ASME Code, Section III, Division 1. Each part listed has been authorized for stamping on the date shown above.

By signing this certificate, neither the inspector nor his employer makes any warranty, expressed or implied, concerning the equipment described in this Data Report. Furthermore, neither the inspector nor his employer shall be liable in any manner for any personal injury or property damage or loss of any kind arising from or connected with this inspection.

Date 4/20/1995 Signed [signature] (Authorized Inspector) Commissions NB10128 N, B (Nat'l. Bd. (incl. endorsements) [redacted] no.)

PLAN NO. 2-2014

FORM N-2 CERTIFICATE HOLDERS' DATA REPORT FOR IDENTICAL NUCLEAR PARTS AND APPURTENANCES*

As Required by the Provisions of the ASME Code, Section III

Not to Exceed One Day's Production

1. Manufactured and certified by HYUNDAI HEAVY INDUSTRIES CO., LTD. NUCLEAR POWER DIVISION 1, JEONHA-DING, ULSAN, KUNG NAM, KOREA 682-792
(name and address of NPT Certificate Holder)

2. Manufactured for BW/IP INTERNATIONAL, INC. PUMP DIVISION 2300 EAST VERNON AVE. VERNON, CA. 90058
(name and address of Purchaser)

3. Location of installation WASHINGTON PUBLIC POWER SUPPLY SYSTEM NORTH POWER PLANT LOOP, RICHLAND, WA. 99352
(name and address)

4. Type:

(drawing no.)	(mat'l. spec. no.)	(tensile strength)	(CRN)	(year built)
N280201-4F0300302 REV.2	SA516-70	70 KSI	N/A	1995

5. ASME Code, Section III, Division 1:

(edition)	(addenda date)	(class)	(Code Case no.)
SEE REMARKS	N/A	3	N/A

6. Fabricated in accordance with Const. Spec. (Div. 2 only) N/A (no.) Revision N/A Date N/A

7. Remarks:
1. ASME SECT. III, 1971 EDITION INCLUDING WINTER A71 FOR STAMPING AND DESIGN REQUIREMENTS.
2. ASME SECT. III, 1986 EDITION WITHOUT ADDENDA FOR FABRICATION AND EXAMINATION.
3. ASME SECT. II, PART A AND C, 1986 EDITION WITHOUT ADDENDA FOR MATERIAL.

8. Nom. thickness (in.) 0.5" Min. design thickness (in.) 0.340" Dia. ID (ft & in.) 21"/19.25" Length overall (ft & in.) 98.251"

9. When applicable, Certificate Holders' Data Reports are attached for each item of this report:

Part or Appurtenance Serial Number	National Board No. in Numerical Order	Part or Appurtenance Serial Number	National Board No. in Numerical Order
(1) NP-95-027	2234	(26)	
(2)		(27)	
(3)		(28)	
(4)		(29)	
(5)		(30)	
(6)		(31)	
(7)		(32)	
(8)		(33)	
(9)		(34)	
(10)		(35)	
(11)		(36)	
(12)		(37)	
(13)		(38)	
(14)		(39)	
(15)		(40)	
(16)		(41)	
(17)		(42)	
(18)		(43)	
(19)		(44)	
(20)		(45)	
(21)		(46)	
(22)		(47)	
(23)		(48)	
(24)		(49)	
(25)		(50)	

10. Design pressure 300 psi. Temp. 150 °F. Hydro. test pressure 450 PSI (when applicable) at temp. °F

* Supplemental information in the form of lists, sketches, or drawings may be used provided (1) size is 8½ × 11, (2) information in items 2 and 3 on this Data Report is included on each sheet, (3) each sheet is numbered and the number of sheets is recorded at the top of this form.

(12/88) This form (E00040) may be obtained from the Order Dept., ASME, 22 Law Drive, Box 2300, Fairfield, NJ 07007-2300.

Reprint (7/91)

Certificate Holder's Serial Nos. NP-95-027 through

CERTIFICATION OF DESIGN

Design specifications certified by N/A (when applicable) P.E. State _____ Reg. no. _____

Design report* certified by N/A (when applicable) P.E. State _____ Reg. no. _____

CERTIFICATE OF COMPLIANCE

We certify that the statements made in this report are correct and that this (these) COLUMN conforms to the rules of construction of the ASME Code, Section III, Division 1.

NPT Certificate of Authorization No. N-2851 Expires AUG. 16, 1997

Date APR. 19. 1995 Name HYUNDAI HEAVY INDUSTRIES CO., LTD. NUCLEAR POWER DIVISION (NPT Certificate Holder) Signed [signature] (Authorized representative) GA MANAGER

CERTIFICATE OF INSPECTION

I, the undersigned, holding a valid commission issued by the National Board of Boiler and Pressure Vessel Inspectors and the State or Province of ILLINOIS and employed by H.S.B.I. & I. CO. of HARTFORD, CT. have inspected these items described in this Data Report on April 20, 1995, and state that to the best of my knowledge and belief, the Certificate Holder has fabricated these parts or appurtenances in accordance with the ASME Code, Section III, Division 1. Each part listed has been authorized for stamping on the date shown above.

By signing this certificate, neither the inspector nor his employer makes any warranty, expressed or implied, concerning the equipment described in this Data Report. Furthermore, neither the inspector nor his employer shall be liable in any manner for any personal injury or property damage or loss of any kind arising from or connected with this inspection.

Date 4/20/1995 Signed [signature] (Authorized Inspector) Commissions NB1012S N. 3 (Nat'l Bd. incl. endorsements) no.

WOT No 01067751 01

ENERGY NORTHWEST
People·Vision·Solutions

FORM NIS-2 OWNER'S REPORT FOR REPAIRS OR REPLACEMENTS
As Required By The Provisions Of The ASME Code Section XI

Date: 07/18/05
Sheet: 1 Of 1
Unit: Not Applicable

1. **Owner:** Energy Northwest
   Address: Columbia Generating Station, North Power Plant Loop, Richland, Washington, 99352
2. **Plant:** Columbia Generating Station
   Address: Columbia Generating Station, North Power Plant Loop, Richland, Washington, 99352
3. (a) **Work Performed By:** Energy Northwest
   (b) **Repair Organization P.O. No, Job No, etc.:** Energy Northwest
   (c) **Type Code Symbol Stamp:** Not Applicable
   (d) **Certificate Of Authorization No.:** Not Applicable
   (e) **Expiration Date:** Not Applicable
4. **Identification Of System:** Main Steam (MS) System
5. (a) **Applicable Construction Code:** ASME Section III, Code Class 2, 1971 Edition with Winter 1973 Addenda, Code Case: None
   (b) **Applicable Edition Of ASME Section XI Utilized For Repairs Or Replacements:** 1989 Edition with no Addenda, Code Case: None
6. **Identification Of Components Repaired Or Replaced And Replacement Components**

Name Of Component	Name Of Manufacturer	Manufacturer's Serial No	National Board No	Other I.D.	Year Built	Repaired, Replaced Or Replacement	ASME Code Stamped (Yes Or No) Code Class
MS(1)-4A	WPPSS*	MS(1)-4A-P1	N/A	N/A	1983	----------	Yes, Code Class 2
MS-96(B)	Pacific Scientific	116	N/A	PSA-10	1976	Replaced	Yes, Code Class 1
MS-96(B)	Pacific Scientific	9842	N/A	PSA-10	1981	Replacement	Yes, Code Class 1

7. **Description Of Work Performed:** Replaced existing snubber for support. The replacement work was performed as follows:
   1) Removed existing snubber.
   2) Installed pretested replacement snubber.
   3) Torqued the fasteners to the required torque value.
   4) Performed visual examination on the installed replacement snubber. Visual examination results acceptable.

NOTES -

1) * Company name changed from Washington Public Power Supply System (WPPSS) to Energy Northwest in 1999.
2) ASME Section III, Code Class NF(1) snubber.
3) The replacement snubber is certified to comply with ASME Section III, Code Class NF(1), 1977 Edition with Winter 1977 Addenda requirements and ASME Code Case No 1644-7.
4) The existing ASME Code Stamped piping system in which the replacement snubber was installed is Main Steam (MS) piping system MS(1)-4A-P1. This piping system is certified to comply with ASME Section III, Code Class 2, 1971 Edition with Winter 1973 Addenda requirements.

WOT No 01067751 01

ENERGY NORTHWEST
People·Vision·Solutions

FORM NIS-2 OWNER'S REPORT FOR REPAIRS OR REPLACEMENTS (Back)

8 Tests Conducted: Hydrostatic [ ] Pneumatic [ ] Nominal Operating Pressure [ ] None [X]
Test Pressure: Psig Test Temperature: °F
Component Design Pressure: Psig Temperature: °F

9. Remarks (Applicable Manufacturer's Data Reports to be attached): See attached NF-1 Code Data Reports for the replacement snubber, Serial No 9842.

CERTIFICATE OF COMPLIANCE

We certify that the statements made in this Owner's Report are correct and this replacement conforms to the rules of the ASME Code, Section XI.
Type Code Symbol Stamp: Not Applicable
Certificate Of Authorization No.: Not Applicable
Expiration Date: Not Applicable

Prepared By Kuldip Singh - Program Lead Engineer (PLE) Signed By Kuldip Singh - Program Lead Engineer (PLE)

Date 7/17/05 Date 7/19/05.

CERTIFICATE OF INSERVICE INSPECTION

I, the undersigned, holding a valid commission issued by the National Board of Boiler and Pressure Vessel Inspectors and the State of Washington and employed by Hartford Steam Boiler Of Connecticut of Hartford, Connecticut have inspected the components described in this Owner's Report during the period 5-8-2005 to 7-22-2005 and state to the best of my knowledge and belief, the Owner has performed examinations and taken corrective measures described in this Owner's Report in accordance with the requirements of the ASME Code, Section XI.
By signing this certificate neither the Inspector nor his employer makes any warranty, expressed or implied, concerning the examinations and corrective measures described in this Owner's Report. Furthermore, neither the Inspector nor his employer shall be liable in any manner for any personal injury or property damage or a loss of any kind arising from or connected with this inspection.

Inspector's Signature Commissions 10655W A, B, N, I
National Board, State, and Endorsements

Date 7-22-2005

W01 NO. 01067751 01

FORM NF-1 NPT CERTIFICATE HOLDERS' DATA REPORT FOR COMPONENT SUPPORTS*

As Required by the Provisions of the ASME Code Rules, Section III, Division 1 #70

E-WZ-767-00

1. Manufactured by Pacific Scientific 1346 S. State College Blvd Anaheim, CA 92803
(Name and address of NPT Certificate Holder)

2. Manufactured for ITT Grinnell Corp. 621 Dana Street N.E. Warren, Ohio 44481
(Name and address of purchaser or owner)

3. Location of Installation Unknown

4. Identification

(a) Component Support I.D. No.	(b) Canadian Registration No.	(c) Applicable Drawings with Last Rev. & Date	(d) Stress Report or Load Capacity Data Sheet	(e) Type of Component Support	(f) Class	(g) Nat'l Board No.	(h) Year Built
(1) 9775-9802,	None	1801103-07-H	DR-1352-Rev. B	Linear	1	None	1981
(2) 9803-9854,	"	"	"	"	"	"	"
(3) 9855-9868	"	"	"	"	"	"	"
(4)							
(5)							
(6) MS-96(B), SIN 9842							
(7)							
(8)							
(9)							
(10)							

5. Remarks:

REVIEWED 8-30-85 [illegible]

CLASS ENGINEERING

[illegible]

[illegible] NCA REP.

CERTIFICATE OF COMPLIANCE

We certify that the statements made in this report are correct and that these components supports conform to the rules of construction of the ASME Code for Nuclear Power Plant Components, Section III, Division 1, Edition 1977, Addenda Winter '77 (Date)

Code Case No. 1644-7

Date 17 March 1981 Signed Pacific Scientific (NPT Certificate Holder) by Bill Jenkins

Our ASME Certificate of Authorization No. 1198 to use the Component Supports (NPT)

Symbol expires Aug. 4, 1981 (Date)

CERTIFICATION OF DESIGN

Design Information on File at Pacific Scientific

Stress Report or Load Capacity Data Sheets on File at:
Pacific Scientific
Filed Per NA 3256

Design Specifications Certified by (1) Leo E. Ay PE State California

Reg. No. 13533

Stress Analysis Report or Load Capacity Data Sheets Certified by (1) Leo E. Ay

State California Reg. No. 13533

(1) Print name only, signature not required.

* Supplemental sheets in form of lists, sketches or drawings may be used provided (1) size is 8½ in., (2) information in items 1, 2, 3, 4, 5 on this Data Report is included on each sheet, and (3) each sheet is numbered and number of sheets is recorded at top of this form.

FORM NF-1 (Back)

CERTIFICATE OF SHOP INSPECTION

I, the undersigned, holding a valid commission issued by the National Board of Boiler and Pressure Vessel Inspectors and the State or Province of California and employed by ESBI&T Co. of Hartford, CT have inspected the component supports described in this Data Report on 3/17, 1981 and state that to the best of my knowledge and belief the NPT Certificate Holder has constructed these component supports in accordance with the ASME Code for Nuclear Power Plant Components.

By signing this certificate, neither the Inspector nor his employer makes any warranty, expressed or implied, concerning the component supports described in this Data Report. Furthermore, neither the Inspector nor his employer shall be liable in any manner for any personal injury or property damage or a loss of any kind arising from or connected with this inspection.

Date 3/17/81

Signed William Meyer Commissions Ca. #1494
(Nat'l Bd., State, Prov., and No.)

CERTIFICATION OF FIELD INSPECTION

I, the undersigned, holding a valid commission issued by the National Board of Boiler and Pressure Vessel Inspectors and the State or Province of _____ and employed by _____ of _____ have compared the statements in this Data Report with the described component supports and st that the parts referred to as data items _____, not included in the certificate of shop inspection, have be inspected by me and that to the best of my knowledge and belief the NPT Certificate Holder has constructed these component supports in accordance with the ASME Code for Nuclear Power Plant Components.

By signing this certificate neither the Inspector nor his employer makes any warranty, expressed or implied, concerning the component supports described in this Data Report. Furthermore, neither the inspector nor his employer shall be liable in any manner for any personal injury or property damage or a loss of any kind arising from or connected with this inspection.

Date _____

Signed _____ Commissions _____
(Nat'l Bd., State, Prov., and No.)

REVIEWED 8-30-83 BY
SEASCO ENGINEERING
REVIEW VERIFIED BY
SEASCO VQA REP.

WOT No 01067751 01

ENERGY NORTHWEST
People·Vision·Solutions

FORM NIS-2 OWNER'S REPORT FOR REPAIRS OR REPLACEMENTS
As Required By The Provisions Of The ASME Code Section XI

Date: 07/18/05
Sheet: 1 Of 1
Unit: Not Applicable

1. **Owner:** Energy Northwest
   Address: Columbia Generating Station, North Power Plant Loop, Richland, Washington, 99352
2. **Plant:** Columbia Generating Station
   Address: Columbia Generating Station, North Power Plant Loop, Richland, Washington, 99352
3. (a) **Work Performed By:** Energy Northwest
   (b) **Repair Organization P.O. No, Job No, etc.:** Energy Northwest
   (c) **Type Code Symbol Stamp:** Not Applicable
   (d) **Certificate Of Authorization No.:** Not Applicable
   (e) **Expiration Date:** Not Applicable
4. **Identification Of System:** Main Steam (MS) System
5. (a) **Applicable Construction Code:** ASME Section III, Code Class 2, 1971 Edition with Winter 1973 Addenda, Code Case: None
   (b) **Applicable Edition Of ASME Section XI Utilized For Repairs Or Replacements:** 1989 Edition with no Addenda, Code Case: None
6. **Identification Of Components Repaired Or Replaced And Replacement Components**

Name Of Component	Name Of Manufacturer	Manufacturer's Serial No	National Board No	Other I.D.	Year Built	Repaired, Replaced Or Replacement	ASME Code Stamped (Yes Or No) Code Class
MS(1)-4A	WPPSS*	MS(1)-4A-P1	N/A	N/A	1983	----------	Yes, Code Class 2
MS-993N(T)	Pacific Scientific	102	N/A	PSA-10	1976	Replaced	Yes, Code Class 1
MS-993N(T)	Pacific Scientific	7082	N/A	PSA-10	1980	Replacement	Yes, Code Class 1

7. **Description Of Work Performed:** Replaced existing snubber for the support. The replacement work was performed as follows:
   1) Removed existing snubber.
   2) Installed pretested replacement snubber.
   3) Torqued the fasteners to the required torque value.
   4) Performed visual examination on the installed replacement snubber. Visual examination results acceptable.

NOTES -

1) * Company name changed from Washington Public Power Supply System (WPPSS) to Energy Northwest in 1999.
2) ASME Section III, Code Class NF(1) snubber.
3) The replacement snubber is certified to comply with ASME Section III, Code Class NF(1), 1977 Edition with Winter 1977 Addenda requirements and ASME Code Case No 1644-7.
4) The existing ASME Code Stamped piping system in which the replacement snubber was installed is Main Steam (MS) piping system MS(1)-4A-P1. This piping system is certified to comply with ASME Section III, Code Class 2, 1971 Edition with Winter 1973 Addenda requirements.

WOT No 01067751 01

ENERGY NORTHWEST
People·Vision·Solutions

FORM NIS-2 OWNER'S REPORT FOR REPAIRS OR REPLACEMENTS (Back)

8 Tests Conducted: Hydrostatic [ ] Pneumatic [ ] Nominal Operating Pressure [ ] None [X]
Test Pressure: Psig Test Temperature: °F
Component Design Pressure: Psig Temperature: °F

9. Remarks (Applicable Manufacturer's Data Reports to be attached): See attached NF-1 Code Data Report for the replacement snubber, Serial No 7082.

CERTIFICATE OF COMPLIANCE

We certify that the statements made in this Owner's Report are correct and this replacement conforms to the rules of the ASME Code, Section XI.
Type Code Symbol Stamp: Not Applicable
Certificate Of Authorization No.: Not Applicable
Expiration Date: Not Applicable

Prepared By Kuldip Singh - Program Lead Engineer (PLE) Signed By Kuldip Singh - Program Lead Engineer (PLE)

Date 7/19/05 Date 7/19/05

CERTIFICATE OF INSERVICE INSPECTION

I, the undersigned, holding a valid commission issued by the National Board of Boiler and Pressure Vessel Inspectors and the State of Washington and employed by Hartford Steam Boiler Of Connecticut of Hartford, Connecticut have inspected the components described in this Owner's Report during the period 5-9-2005 to 7-22-2005 and state to the best of my knowledge and belief, the Owner has performed examinations and taken corrective measures described in this Owner's Report in accordance with the requirements of the ASME Code, Section XI.
By signing this certificate neither the Inspector nor his employer makes any warranty, expressed or implied, concerning the examinations and corrective measures described in this Owner's Report. Furthermore, neither the Inspector nor his employer shall be liable in any manner for any personal injury or property damage or a loss of any kind arising from or connected with this inspection.

Inspector's Signature Commissions 10655W A, B, N, I
National Board, State, and Endorsements

Date 7-22-2005

W01 No. 01067751 01

FORM NF-1 NPT CERTIFICATE HOLDERS' DATA REPORT FOR COMPONENT SUPPORTS*

As Required by the Provisions of the ASME Code Rules, Section III, Division 1

#10

E-WZ-210

1. Manufactured by Pacific Scientific 1346 S. State College Blvd Anaheim, CA 92803
(Name and address of NPT Certificate Holder)

2. Manufacturer for ITT Grinnell Corp. 621 Dana Street N.E. Warren, Ohio 44481
(Name and address of purchaser or owner)

3. Location of Installation Unknown

4. Identification

	(a) Component Support I.D. No.	(b) Canadian Registration No.	(c) Applicable Drawings with Last Rev. & Date	(d) Stress Report or Load Capacity Data Sheet	(e) Type of Component Support	(f) Class	(g) Nat'l Board No.	(h) Year Built
(1)	7082-7137	None	1801103-07-H	DR-1352-Rev. B	Linear	1	None	1980
(2)								
(3)								
(4)								
(5)	MS-993N(T), S/N 7082							
(6)								
(7)								
(8)	Philip Smith							
(9)	7/15/05							
(10)								

5. Remarks:

CERTIFICATE OF COMPLIANCE

We certify that the statements made in this report are correct and that these components supports conform to the rules of construction of the ASME Code for Nuclear Power Plant Components, Section III, Division 1, Edition 1977, Addenda Winter '77 (Date).

Code Case No. 1644-7

Date 22 April 1980 Signed Pacific Scientific (NPT Certificate Holder) by Bill Jerkins

Our ASME Certificate of Authorization No. 1198 to use the Component Supports (NPT)

Symbol expires Aug. 4, 1981 (Date).

CERTIFICATION OF DESIGN

Design Information on File at Pacific Scientific

Stress Report or Load Capacity Data Sheets on File at:
Pacific Scientific
Filed Per NA 3256

Design Specifications Certified by (1) Leo E. Ay PE State California

Reg. No. 13533.

Stress Analysis Report or Load Capacity Data Sheets Certified by (1) Leo E. Ay

PE State California Reg. No. 13533.

(1) List name only, signature not required.

REVIEWED BY JAB 6-4-82 EBASCO ENGINEERING
REVIEW VERIFIED BY J.A.B. EBASCO QA REP.

*Supplemental sheets in form of lists, sketches or drawings may be used provided (1) size is 8½ in., (2) information in items 1, 2, 4c, 4g on this Data Report is included on each sheet, and (3) each sheet is numbered and number of sheets is recorded at top of this form.

(10/77)

FORM NF-1 (Back)

CERTIFICATE OF SHOP INSPECTION

I, the undersigned, holding a valid commission issued by the National Board of Boiler and Pressure Vessel Inspectors and the State or Province of California and employed by HSBI&I Co. of Hartford, CT have inspected the component supports described in this Data Report on 4/23/80, 19 ___ and state that to the best of my knowledge and belief the NPT Certificate Holder has constructed these component supports in accordance with the ASME Code for Nuclear Power Plant Components.

By signing this certificate, neither the Inspector nor his employer makes any warranty, expressed or implied, concerning the component supports described in this Data Report. Furthermore, neither the Inspector nor his employer shall be liable in any manner for any personal injury or property damage or a loss of any kind arising from or connected with this inspection.

Date 4/23/80.

Signed William Meyer Commissions Ca. #1494
(Nat'l Bd., State, Prov., and No.)

CERTIFICATION OF FIELD INSPECTION

I, the undersigned, holding a valid commission issued by the National Board of Boiler and Pressure Vessel Inspectors and the State or Province of ___ and employed by ___ of ___ have compared the statements in this Data Report with the described component supports and state that the parts referred to as data items ___, not included in the certificate of shop inspection, have be inspected by me and that to the best of my knowledge and belief the NPT Certificate Holder has constructed these component supports in acco ance with the ASME Code for Nuclear Power Plant Components.

By signing this certificate neither the Inspector nor his employer makes any warranty, expressed or implied, concerning the component supports described in this Data Report. Furthermore, neither the Inspector nor his employer shall be liable in any manner for any personal injury or property damage or a loss of any kind arising from or connected with this inspection.

Date ___.

Signed ___ Commissions ___
(Nat'l Bd., State, Prov., and No.)

WOT No 01067751 01

ENERGY NORTHWEST
People·Vision·Solutions

FORM NIS-2 OWNER'S REPORT FOR REPAIRS OR REPLACEMENTS
As Required By The Provisions Of The ASME Code Section XI

Date: 07/18/05
Sheet: 1 Of 1
Unit: Not Applicable

1. **Owner:** Energy Northwest
   Address: Columbia Generating Station, North Power Plant Loop, Richland, Washington, 99352
2. **Plant:** Columbia Generating Station
   Address: Columbia Generating Station, North Power Plant Loop, Richland, Washington, 99352
3. **(a) Work Performed By:** Energy Northwest
   (b) Repair Organization P.O. No, Job No, etc.: Energy Northwest
   (c) Type Code Symbol Stamp: Not Applicable
   (d) Certificate Of Authorization No.: Not Applicable
   (e) Expiration Date: Not Applicable
4. **Identification Of System:** Main Steam (MS) System
5. **(a) Applicable Construction Code:** ASME Section III, Code Class 2, 1971 Edition with Winter 1973 Addenda, Code Case: None
   (b) Applicable Edition Of ASME Section XI Utilized For Repairs Or Replacements: 1989 Edition with no Addenda, Code Case: None
6. **Identification Of Components Repaired Or Replaced And Replacement Components**

Name Of Component	Name Of Manufacturer	Manufacturer's Serial No	National Board No	Other I.D.	Year Built	Repaired, Replaced Or Replacement	ASME Code Stamped (Yes Or No) Code Class
MS(1)-4B	WPPSS*	MS(1)-4B-P1	N/A	N/A	1983	----------	Yes, Code Class 2
MS-177(N)	Pacific Scientific	2362	N/A	PSA-3	1977	Replaced	Yes, Code Class 1
MS-177(N)	Pacific Scientific	10516	N/A	PSA-3	1980	Replacement	Yes, Code Class 1

7. **Description Of Work Performed:** Replaced existing snubber for support. The replacement work was performed as follows:
   1) Removed existing snubber.
   2) Installed pretested replacement snubber.
   3) Torqued the fasteners to the required torque value.
   4) Performed visual examination on the installed replacement snubber. Visual examination results acceptable.

NOTES -

1) * Company name changed from Washington Public Power Supply System (WPPSS) to Energy Northwest in 1999.
2) ASME Section III, Code Class NF(1) snubber.
3) The replacement snubber is certified to comply with ASME Section III, Code Class NF(1), 1974 Edition with Winter 1976 Addenda requirements and ASME Code Case No 1644-5.
4) The existing ASME Code Stamped piping system in which the replacement snubber was installed is Main Steam (MS) piping system MS(1)-4B-P1. This piping system is certified to comply with ASME Section III, Code Class 2, 1971 Edition with Winter 1973 Addenda requirements.

WOT No 01067751 01

ENERGY NORTHWEST
People·Vision·Solutions

FORM NIS-2 OWNER'S REPORT FOR REPAIRS OR REPLACEMENTS (Back)

8 Tests Conducted: Hydrostatic [ ] Pneumatic [ ] Nominal Operating Pressure [ ] None [X]
Test Pressure: Psig Test Temperature: °F
Component Design Pressure: Psig Temperature: °F

9. Remarks (Applicable Manufacturer's Data Reports to be attached): See attached NF-1 Code Data Reports for the replacement snubber, Serial No 10516.

CERTIFICATE OF COMPLIANCE

We certify that the statements made in this Owner's Report are correct and this replacement conforms to the rules of the ASME Code, Section XI.
Type Code Symbol Stamp: Not Applicable
Certificate Of Authorization No.: Not Applicable
Expiration Date: Not Applicable

Prepared By Kuldip Singh - Program Lead Engineer (PLE) Signed By Kuldip Singh - Program Lead Engineer (PLE)

Date 7/19/05 Date 7/19/05.

CERTIFICATE OF INSERVICE INSPECTION

I, the undersigned, holding a valid commission issued by the National Board of Boiler and Pressure Vessel Inspectors and the State of Washington and employed by Hartford Steam Boiler Of Connecticut of Hartford, Connecticut have inspected the components described in this Owner's Report during the period 5-9-2005 to 7-22-2005 and state to the best of my knowledge and belief, the Owner has performed examinations and taken corrective measures described in this Owner's Report in accordance with the requirements of the ASME Code, Section XI.
By signing this certificate neither the Inspector nor his employer makes any warranty, expressed or implied, concerning the examinations and corrective measures described in this Owner's Report. Furthermore, neither the Inspector nor his employer shall be liable in any manner for any personal injury or property damage or a loss of any kind arising from or connected with this inspection.

Inspector's Signature Commissions 1065560 A, B, N, I
National Board, State, and Endorsements

Date 7-22-2005

WO'T NC. 01067751 01 #3

FORM NF-1 NPT CERTIFICATE HOLDER'S DATA REPORT FOR COMPONENT SUPPORTS*

As Required by the Provisions of the ASME Code Rules, Section III, Division 1 E-WZ-796

1. Manufactured by Pacific Scientific 1346 S. State College Blvd. Anaheim, Ca. 92803
(Name and address of NPT Certificate Holder)

2. Manufacturer for ITT Grinnell Corp. 621 Dana Street N.E. Warren, Ohio 44481
(Name and address of purchaser or owner)

3. Location of Installation Unknown

4. Identification

	(a) Component Support I.D. No.	(b) Canadian Registration No.	(c) Applicable Drawings with Last Rev. & Date	(d) Stress Report or Load Capacity Data Sheet	(e) Type of Component Support	(f) Class	(g) Nat'l Board No.	(h) Year Built
(1)	10511-10628	None	1801106-05-H	DR-1350-Rev. B	Linear	1	None	1980
(2)								
(3)								
(4)								
(5)	MS-177(N), S/N 10516							
(6)								
(7)								
(8)	Philip Simpson							
(9)	7/18/05							
(10)								

5. Remarks:

CERTIFICATE OF COMPLIANCE

We certify that the statements made in this report are correct and that these components supports conform to the rules of construction of the ASME Code for Nuclear Power Plant Components, Section III, Division 1, Edition '74, Addenda Winter '76 (Date), Code Case No. 1644-5

Date 25 January 1980 Signed Pacific Scientific (NPT Certificate Holder) by Bill Jenkins

Our ASME Certificate of Authorization No. 1198 to use the Component Supports (NPT)

Symbol expires Aug. 4, 1981 (Date).

CERTIFICATION OF DESIGN

Design Information on File at Pacific Scientific

Stress Report or Load Capacity Data Sheets on File at:
Pacific Scientific
Filed Per NA 3256

Design Specifications Certified by (1) Leo e. Ay PE State California

Reg. No. 13533.

Stress Analysis Report or Load Capacity Data Sheets Certified by (1) Leo E. Ay

PE State California Reg. No. 13533.

(1) List name only, signature not required.

*Supplemental sheets in form of lists, sketches or drawings may be used provided (1) size is 8½ in., (2) information in items 1, 2, 4c, 4g on this Data Report is included on each sheet, and (3) each sheet is numbered and number of sheets is recorded at top of this form.

FORM NF-1 (Back)

CERTIFICATE OF SHOP INSPECTION

I, the undersigned, holding a valid commission issued by the National Board of Boiler and Pressure Vessel Inspectors and the State or Province of New York and employed by HSBI&I Co. of Hartford, CT _____ have inspected the component supports described in this Data Report on 1/25, 19 80 and state that to the best of my knowledge and belief the NPT Certificate Holder has constructed these component supports in accordance with the ASME Code for Nuclear Power Plant Components.

By signing this certificate, neither the Inspector nor his employer makes any warranty, expressed or implied, concerning the component supports described in this Data Report. Furthermore, neither the Inspector nor his employer shall be liable in any manner for any personal injury or property damage or a loss of any kind arising from or connected with this inspection.

Date 1/25/80.

Signed William May Commissions N.Y. Comm #2770 / Ohio Comm
(Nat'l Bd., State, Prov., and No.)

CERTIFICATION OF FIELD INSPECTION

I, the undersigned, holding a valid commission issued by the National Board of Boiler and Pressure Vessel Inspectors and the State or Province of _____ and employed by _____ of _____ have compared the statements in this Data Report with the described component supports and state that the parts referred to as data items _____, not included in the certificate of shop inspection, have been inspected by me and that to the best of my knowledge and belief the NPT Certificate Holder has constructed these component supports in accordance with the ASME Code for Nuclear Power Plant Components.

By signing this certificate neither the Inspector nor his employer makes any warranty, expressed or implied, concerning the component supports described in this Data Report. Furthermore, neither the inspector nor his employer shall be liable in any manner for any personal injury or property damage or a loss of any kind arising from or connected with this inspection.

Date _____.

Signed _____ Commissions _____
(Nat'l Bd., State, Prov., and No.)

WOT No 01067751 01

ENERGY NORTHWEST
People·Vision·Solutions

FORM NIS-2 OWNER'S REPORT FOR REPAIRS OR REPLACEMENTS
As Required By The Provisions Of The ASME Code Section XI

Date: 07/18/05
Sheet: 1 Of 1
Unit: Not Applicable

1. **Owner:** Energy Northwest
   Address: Columbia Generating Station, North Power Plant Loop, Richland, Washington, 99352
2. **Plant:** Columbia Generating Station
   Address: Columbia Generating Station, North Power Plant Loop, Richland, Washington, 99352
3. (a) **Work Performed By:** Energy Northwest
   (b) **Repair Organization P.O. No, Job No, etc.:** Energy Northwest
   (c) **Type Code Symbol Stamp:** Not Applicable
   (d) **Certificate Of Authorization No.:** Not Applicable
   (e) **Expiration Date:** Not Applicable
4. **Identification Of System:** Reactor Recirculation (RRC) System
5. (a) **Applicable Construction Code:** ASME Section III, Code Class 1, 1971 Edition with Winter 1973 Addenda, Code Case: None
   (b) **Applicable Edition Of ASME Section XI Utilized For Repairs Or Replacements:** 1989 Edition with no Addenda, Code Case: None
6. **Identification Of Components Repaired Or Replaced And Replacement Components**

Name Of Component	Name Of Manufacturer	Manufacturer's Serial No	National Board No	Other I.D.	Year Built	Repaired, Replaced Or Replacement	ASME Code Stamped (Yes Or No) Code Class
RRC(51)-4	WPPSS*	RRC(51)-4-P1	N/A	N/A	1983	----------	Yes, Code Class 1
RRC-1549-62	Pacific Scientific	28430	N/A	PSA-1/4	1982	Replaced	Yes, Code Class 1
RRC-1549-62	Pacific Scientific	28688	N/A	PSA-1/4	1982	Replacement	Yes, Code Class 1

7. **Description Of Work Performed:** Replaced existing snubber for support. The replacement work was performed as follows:
   1) Removed existing snubber.
   2) Installed pretested replacement snubber.
   3) Torqued the fasteners to the required torque value.
   4) Performed visual examination on the installed replacement snubber. Visual examination results acceptable.

NOTES -

1) * Company name changed from Washington Public Power Supply System (WPPSS) to Energy Northwest in 1999.
2) ASME Section III, Code Class NF(1) snubber.
3) The replacement snubber is certified to comply with ASME Section III, Code Class NF(1), 1977 Edition with Winter 1978 Addenda requirements and ASME Code Case No 1644-6 and 1644-7.
4) The existing ASME Code Stamped piping system in which the replacement snubber was installed is Main Steam (MS) piping system RRC(51)-4-P1. This piping system is certified to comply with ASME Section III, Code Class 1, 1971 Edition with Winter 1973 Addenda requirements.

WOT No 01067751 01

ENERGY NORTHWEST
People·Vision·Solutions

FORM NIS-2 OWNER'S REPORT FOR REPAIRS OR REPLACEMENTS (Back)

8 Tests Conducted: Hydrostatic [ ] Pneumatic [ ] Nominal Operating Pressure [ ] None [X]
Test Pressure: Psig Test Temperature: °F
Component Design Pressure: Psig Temperature: °F

9. Remarks (Applicable Manufacturer's Data Reports to be attached): See attached NF-1 Code Data Reports for the replacement snubber, Serial No 28688.

CERTIFICATE OF COMPLIANCE

We certify that the statements made in this Owner's Report are correct and this replacement conforms to the rules of the ASME Code, Section XI.
Type Code Symbol Stamp: Not Applicable
Certificate Of Authorization No.: Not Applicable
Expiration Date: Not Applicable

Prepared By Kuldip Singh - Program Lead Engineer (PLE) Signed By Kuldip Singh - Program Lead Engineer (PLE)

Date 7/19/05 Date 7/19/05.

CERTIFICATE OF INSERVICE INSPECTION

I, the undersigned, holding a valid commission issued by the National Board of Boiler and Pressure Vessel Inspectors and the State of Washington and employed by Hartford Steam Boiler Of Connecticut of Hartford, Connecticut have inspected the components described in this Owner's Report during the period 5-9-2005 to 7-22-2005 and state to the best of my knowledge and belief, the Owner has performed examinations and taken corrective measures described in this Owner's Report in accordance with the requirements of the ASME Code, Section XI.
By signing this certificate neither the Inspector nor his employer makes any warranty, expressed or implied, concerning the examinations and corrective measures described in this Owner's Report. Furthermore, neither the Inspector nor his employer shall be liable in any manner for any personal injury or property damage or a loss of any kind arising from or connected with this inspection.

Inspector's Signature Commissions 10655W A, B, N, I
National Board, State, and Endorsements

Date 7-22-2005

WOT No. 0106775101

#1/4

FORM NF-1 NPT CERTIFICATE HOLDERS' DATA REPORT FOR COMPONENT SUPPORTS*

As Required by the Provisions of the ASME Code Rules, Section III, Division 1 E-WY-449

~~Rin Tech Division~~

1. Manufactured by Pacific Scientific 1346 S. State College Blvd. Anaheim, Ca. 92803
(Name and address of NPT Certificate Holder)

2. Manufacturer for ITT Grinnell Corporation 621 Dana Street N.E. Warren, Ohio 44481
(Name and address of purchaser or owner)

3. Location of Installation Unknown

4. Identification

(a) Component Support I.D. No.	(b) Canadian Registration No.	(c) Applicable Drawings with Last Rev. & Date	(d) Stress Report or Load Capacity Data Sheet	(e) Type of Component Support	(f) Class	(g) Nat'l Board No.	(h) Year Built
(1) 28570	None	1801104-05-J	DR 1412 Rev. 0	Linear	1	None	1982
(2) thru							
(3) 28710							
(4)							
(5) RRC-1549-62, S/N 2668B							
(6)							
(7)							
(8) Philip Sing							
(9) 7/18/05							
(10)							

5. Remarks: Inspection Test Reports, CMTR's and Certificate of Conformance reviewed and meet ASME Sec III 1974 Edition, Summer '76 Addenda and Code Case 1644-6.

CERTIFICATE OF COMPLIANCE

We certify that the statements made in this report are correct and that these components supports conform to the rules of construction of the ASME Code for Nuclear Power Plant Components, Section III, Division 1, Edition 1977, Addenda Winter '78 (Date), Code Case No. 1644-7

Date 8/18/82 Signed Pacific Scientific (NPT Certificate Holder) by [signature]

Our ASME Certificate of Authorization No. 1198 to use the "NPT" (NPT)

Symbol expires Aug. 4, 1984 (Date)

CERTIFICATION OF DESIGN

Design Information on File at Pacific Scientific

Stress Report or Load Capacity Data Sheets on File at: Pacific Scientific

Filed Per NCA 3256

Design Specifications Certified by (1) Leo E. Ay PE State California

Reg. No. 13533

Stress Analysis Report or Load Capacity Data Sheets Certified by (1) Leo E. Ay

PE State California Reg. No. 13533

(1) List name only, signature not required.

REVIEWED BY JAB 10-8-82 EBASCO ENGINEERING

REVIEW VERIFIED BY [signature] EBASCO QA REP.

ITT GRINNELL CORP. Warren Quality Assurance AUG 26 1982 REVIEWED BY DLW

*Supplemental sheets in form of lists, sketches or drawings may be used provided (1) size is 8½ in., (2) information in items 1, 2, 4c, 4g on this Data Report is included on each sheet, and (3) each sheet is numbered and number of sheets is recorded at top of this form.

FORM NF-1 (Back)

CERTIFICATE OF SHOP INSPECTION

I, the undersigned, holding a valid commission issued by the National Board of Boiler and Pressure Vessel Inspectors and the State or Province of OHIO and employed by HSBI&I Co. of Hartford, CT have inspected the component supports described in this Data Report on AUG. 1 9 1982, 19 ___ and state that to the best of my knowledge and belief the NPT Certificate Holder has constructed these component supports in accordance with the ASME Code for Nuclear Power Plant Components.

By signing this certificate, neither the Inspector nor his employer makes any warranty, expressed or implied, concerning the component supports described in this Data Report. Furthermore, neither the Inspector nor his employer shall be liable in any manner for any personal injury or property damage or a loss of any kind arising from or connected with this inspection.

Date AUG. 1 9 1982.

Signed Eugene Regale Commissions CA-1513/OHIO COMMISSION
(Nat'l Bd., State, Prov., and No.)

CERTIFICATION OF FIELD INSPECTION

I, the undersigned, holding a valid commission issued by the National Board of Boiler and Pressure Vessel Inspectors and the State or Province of ___ and employed by ___ of ___ have compared the statements in this Data Report with the described component supports and state that the parts referred to as data items ___, not included in the certificate of shop inspection, have been inspected by me and that to the best of my knowledge and belief the NPT Certificate Holder has constructed these component supports in accordance with the ASME Code for Nuclear Power Plant Components.

By signing this certificate neither the Inspector nor his employer makes any warranty, expressed or implied, concerning the component supports described in this Data Report. Furthermore, neither the Inspector nor his employer shall be liable in any manner for any personal injury or property damage or a loss of any kind arising from or connected with this inspection.

Date ___.

Signed ___ Commissions ___
(Nat'l Bd., State, Prov., and No.)

WOT No 01067751 01

ENERGY NORTHWEST
People·Vision·Solutions

FORM NIS-2 OWNER'S REPORT FOR REPAIRS OR REPLACEMENTS
As Required By The Provisions Of The ASME Code Section XI

Date: 07/18/05
Sheet: 1 Of 1
Unit: Not Applicable

1. **Owner:** Energy Northwest
   Address: Columbia Generating Station, North Power Plant Loop, Richland, Washington, 99352
2. **Plant:** Columbia Generating Station
   Address: Columbia Generating Station, North Power Plant Loop, Richland, Washington, 99352
3. **(a) Work Performed By:** Energy Northwest
   (b) Repair Organization P.O. No, Job No, etc.: Energy Northwest
   (c) Type Code Symbol Stamp: Not Applicable
   (d) Certificate Of Authorization No.: Not Applicable
   (e) Expiration Date: Not Applicable
4. **Identification Of System:** Main Steam (MS) System
5. **(a) Applicable Construction Code:** ASME Section III, Code Class 2, 1971 Edition with Winter 1973 Addenda, Code Case: None
   (b) Applicable Edition Of ASME Section XI Utilized For Repairs Or Replacements: 1989 Edition with no Addenda, Code Case: None
6. **Identification Of Components Repaired Or Replaced And Replacement Components**

Name Of Component	Name Of Manufacturer	Manufacturer's Serial No	National Board No	Other I.D.	Year Built	Repaired, Replaced Or Replacement	ASME Code Stamped (Yes Or No) Code Class
MS(1)-4A	WPPSS*	MS(1)-4A-P1	N/A	N/A	1983	----------	Yes, Code Class 2
MS-114(N)	Pacific Scientific	313	N/A	PSA-10	1976	Replaced	Yes, Code Class 1
MS-114(N)	Pacific Scientific	7098	N/A	PSA-10	1980	Replacement	Yes, Code Class 1

7. **Description Of Work Performed:** Replaced existing snubber for the support. The replacement work was performed as follows:
   1) Removed existing snubber.
   2) Installed pretested replacement snubber.
   3) Torqued the fasteners to the required torque value.
   4) Performed visual examination on the installed replacement snubber. Visual examination results acceptable.

NOTES -

1) * Company name changed from Washington Public Power Supply System (WPPSS) to Energy Northwest in 1999.
2) ASME Section III, Code Class NF(1) snubber.
3) The replacement snubber is certified to comply with ASME Section III, Code Class NF(1), 1977 Edition with Winter 1977 Addenda requirements and ASME Code Case No 1644-7.
4) The existing ASME Code Stamped piping system in which the replacement snubber was installed is Main Steam (MS) piping system MS(1)-4A-P1. This piping system is certified to comply with ASME Section III, Code Class 2, 1971 Edition with Winter 1973 Addenda requirements.

WOT No 01067751 01

ENERGY NORTHWEST
People·Vision·Solutions

FORM NIS-2 OWNER'S REPORT FOR REPAIRS OR REPLACEMENTS (Back)

8 Tests Conducted: Hydrostatic [ ] Pneumatic [ ] Nominal Operating Pressure [ ] None [X]
Test Pressure: Psig Test Temperature: °F
Component Design Pressure: Psig Temperature: °F

9. Remarks (Applicable Manufacturer's Data Reports to be attached): See attached NF-1 Code Data Report for the replacement snubber, Serial No 7098.

CERTIFICATE OF COMPLIANCE

We certify that the statements made in this Owner's Report are correct and this replacement conforms to the rules of the ASME Code, Section XI.
Type Code Symbol Stamp: Not Applicable
Certificate Of Authorization No.: Not Applicable
Expiration Date: Not Applicable

Prepared By Kuldip Singh - Program Lead Engineer (PLE) Signed By Kuldip Singh - Program Lead Engineer (PLE)

Date 7/19/05 Date 7/19/05

CERTIFICATE OF INSERVICE INSPECTION

I, the undersigned, holding a valid commission issued by the National Board of Boiler and Pressure Vessel Inspectors and the State of Washington and employed by Hartford Steam Boiler Of Connecticut of Hartford, Connecticut have inspected the components described in this Owner's Report during the period 5-9-2005 to 7-22-2005 and state to the best of my knowledge and belief, the Owner has performed examinations and taken corrective measures described in this Owner's Report in accordance with the requirements of the ASME Code, Section XI.
By signing this certificate neither the Inspector nor his employer makes any warranty, expressed or implied, concerning the examinations and corrective measures described in this Owner's Report. Furthermore, neither the Inspector nor his employer shall be liable in any manner for any personal injury or property damage or a loss of any kind arising from or connected with this inspection.

Inspector's Signature Commissions 10655W A, B, U, I
National Board, State, and Endorsements

Date 7·22·2005

WO-1 NO. 01067751 01

FORM NF-1 NPT CERTIFICATE HOLDERS' DATA REPORT FOR COMPONENT SUPPORTS*

As Required by the Provisions of the ASME Code Rules, Section III, Division 1

#10

E-WZ-210

1. Manufactured by Pacific Scientific 1346 S. State College Blvd. Anaheim, CA. 92803
(Name and address of NPT Certificate Holder)

2. Manufacturer for ITT Grinnell Corp. 621 Dana Street N.E. Warren, Ohio 44481
(Name and address of purchaser or owner)

3. Location of Installation Unknown

4. Identification

	(a) Component Support I.D. No.	(b) Canadian Registration No.	(c) Applicable Drawings with Last Rev. & Date	(d) Stress Report or Load Capacity Data Sheet	(e) Type of Component Support	(f) Class	(g) Nat'l Board No.	(h) Year Built
(1)	7082-7137	None	1801103-07-H	DR-1352-Rev. B	Linear	1	None	1980
(2)								
(3)								
(4)								
(5)	MS-114(N), S/N 7098							
(6)								
(7)								
(8)								
(9)								
(10)								

5. Remarks:

CERTIFICATE OF COMPLIANCE

We certify that the statements made in this report are correct and that these components supports conform to the rules of construction of the ASME Code for Nuclear Power Plant Components, Section III, Division 1, Edition 1977, Addenda Winter '77 (Date).

Code Case No. 1644-7

Date 22 April 1980 Signed Pacific Scientific (NPT Certificate Holder) by Bill Jenkins

Our ASME Certificate of Authorization No. 1198 to use the Component Supports (NPT)

Symbol expires Aug. 4, 1981 (Date).

CERTIFICATION OF DESIGN

Design Information on File at Pacific Scientific

Stress Report or Load Capacity Data Sheets on File at:
Pacific Scientific
Filed Per NA 3256

Design Specifications Certified by (1) Leo E. Ay PE State California

Reg. No. 13533.

Stress Analysis Report or Load Capacity Data Sheets Certified by (1) Leo E. Ay

PE State California Reg. No. 13533.

(1) List name only, signature not required.

REVIEWED BY 6-4-82 JAB
EBASCO ENGINEERING
REVIEW VERIFIED BY
EBASCO QA REP.

*Supplemental sheets in form of lists, sketches or drawings may be used provided (1) size is 8½ in., (2) information in items 1, 2, 4c, 4g on this Data Report is included on each sheet, and (3) each sheet is numbered and number of sheets is recorded at top of this form.

(10/77)

FORM NF-1 (Back)

CERTIFICATE OF SHOP INSPECTION

I, the undersigned, holding a valid commission issued by the National Board of Boiler and Pressure Vessel Inspectors and the State or Province of California and employed by HSBI&I Co. of Hartford, CT have inspected the component supports described in this Data Report on 4/23/80, 19 ___ and state that to the best of my knowledge and belief the NPT Certificate Holder has constructed these component supports in accordance with the ASME Code for Nuclear Power Plant Components.

By signing this certificate, neither the Inspector nor his employer makes any warranty, expressed or implied, concerning the component supports described in this Data Report. Furthermore, neither the Inspector nor his employer shall be liable in any manner for any personal injury or property damage or a loss of any kind arising from or connected with this inspection.

Date 4/23/80.

Signed William Meyer Commissions Ca. #1494
(Nat'l Bd., State, Prov., and No.)

CERTIFICATION OF FIELD INSPECTION

I, the undersigned, holding a valid commission issued by the National Board of Boiler and Pressure Vessel Inspectors and the State or Province of ___ and employed by ___ of ___ have compared the statements in this Data Report with the described component supports and state that the parts referred to as data items ___, not included in the certificate of shop inspection, have be inspected by me and that to the best of my knowledge and belief the NPT Certificate Holder has constructed these component supports in acco ance with the ASME Code for Nuclear Power Plant Components.

By signing this certificate neither the Inspector nor his employer makes any warranty, expressed or implied, concerning the component supports described in this Data Report. Furthermore, neither the Inspector nor his employer shall be liable in any manner for any personal injury or property damage or a loss of any kind arising from or connected with this inspection.

Date ___.

Signed ___ Commissions ___
(Nat'l Bd., State, Prov., and No.)

WOT No 01067751 01

ENERGY NORTHWEST
People·Vision·Solutions

FORM NIS-2 OWNER'S REPORT FOR REPAIRS OR REPLACEMENTS
As Required By The Provisions Of The ASME Code Section XI

Date: 07/18/05
Sheet: 1 Of 1
Unit: Not Applicable

1. **Owner:** Energy Northwest
   Address: Columbia Generating Station, North Power Plant Loop, Richland, Washington, 99352
2. **Plant:** Columbia Generating Station
   Address: Columbia Generating Station, North Power Plant Loop, Richland, Washington, 99352
3. (a) **Work Performed By:** Energy Northwest
   (b) **Repair Organization P.O. No, Job No, etc.:** Energy Northwest
   (c) **Type Code Symbol Stamp:** Not Applicable
   (d) **Certificate Of Authorization No.:** Not Applicable
   (e) **Expiration Date:** Not Applicable
4. **Identification Of System:** Main Steam (MS) System
5. (a) **Applicable Construction Code:** ASME Section III, Code Class 2, 1971 Edition with Winter 1973 Addenda, Code Case: None
   (b) **Applicable Edition Of ASME Section XI Utilized For Repairs Or Replacements:** 1989 Edition with no Addenda, Code Case: None
6. **Identification Of Components Repaired Or Replaced And Replacement Components**

Name Of Component	Name Of Manufacturer	Manufacturer's Serial No	National Board No	Other I.D.	Year Built	Repaired, Replaced Or Replacement	ASME Code Stamped (Yes Or No) Code Class
MS(1)-4B	WPPSS*	MS(1)-4B-P1	N/A	N/A	1983	----------	Yes, Code Class 2
MS-996N(T)	Pacific Scientific	319	N/A	PSA-10	1976	Replaced	Yes, Code Class 1
MS-996N(T)	Pacific Scientific	9862	N/A	PSA-10	1981	Replacement	Yes, Code Class 1

7. **Description Of Work Performed:** Replaced existing snubber for support. The replacement work was performed as follows:
   1) Removed existing snubber.
   2) Installed pretested replacement snubber.
   3) Torqued the fasteners to the required torque value.
   4) Performed visual examination on the installed replacement snubber. Visual examination results acceptable.

NOTES -

1) * Company name changed from Washington Public Power Supply System (WPPSS) to Energy Northwest in 1999.
2) ASME Section III, Code Class NF(1) snubber.
3) The replacement snubber is certified to comply with ASME Section III, Code Class NF(1), 1977 Edition with Winter 1977 Addenda requirements and ASME Code Case No 1644-7.
4) The existing ASME Code Stamped piping system in which the replacement snubber was installed is Main Steam (MS) piping system MS(1)-4B-P1. This piping system is certified to comply with ASME Section III, Code Class 2, 1971 Edition with Winter 1973 Addenda requirements.

WOT No 01067751 01

ENERGY NORTHWEST
People·Vision·Solutions

FORM NIS-2 OWNER'S REPORT FOR REPAIRS OR REPLACEMENTS (Back)

8 Tests Conducted: Hydrostatic [ ] Pneumatic [ ] Nominal Operating Pressure [ ] None [X]
Test Pressure: Psig Test Temperature: °F
Component Design Pressure: Psig Temperature: °F

9. Remarks (Applicable Manufacturer's Data Reports to be attached): See attached NF-1 Code Data Reports for the replacement snubber, Serial No 9862.

CERTIFICATE OF COMPLIANCE

We certify that the statements made in this Owner's Report are correct and this replacement conforms to the rules of the ASME Code, Section XI.
Type Code Symbol Stamp: Not Applicable
Certificate Of Authorization No.: Not Applicable
Expiration Date: Not Applicable

Prepared By Kuldip Singh - Program Lead Engineer (PLE) Signed By Kuldip Singh - Program Lead Engineer (PLE)

Date 7/19/05 Date 7/19/05.

CERTIFICATE OF INSERVICE INSPECTION

I, the undersigned, holding a valid commission issued by the National Board of Boiler and Pressure Vessel Inspectors and the State of Washington and employed by Hartford Steam Boiler Of Connecticut of Hartford, Connecticut have inspected the components described in this Owner's Report during the period 5-9-2005 to 7-22-2005 and state to the best of my knowledge and belief, the Owner has performed examinations and taken corrective measures described in this Owner's Report in accordance with the requirements of the ASME Code, Section XI.
By signing this certificate neither the Inspector nor his employer makes any warranty, expressed or implied, concerning the examinations and corrective measures described in this Owner's Report. Furthermore, neither the Inspector nor his employer shall be liable in any manner for any personal injury or property damage or a loss of any kind arising from or connected with this inspection.

Inspector's Signature Commissions 10655W A, B, N, E
National Board, State, and Endorsements

Date 7-22-2005

WOT. No. 01667751 01

FORM NF-1 NPT CERTIFICATE HOLDERS' DATA REPORT FOR COMPONENT SUPPORTS*

As Required by the Provisions of the ASME Code Rules, Section III, Division 1 #70

E-WZ-767-00

1. Manufactured by Pacific Scientific 1346 S. State College Blvd Anaheim, CA. 92803
(Name and address of NPT Certificate Holder)

2. Manufacturer for ITT Grinnell Corp. 621 Dana Street N.E. Warren, Ohio 44481
(Name and address of purchaser or owner)

3. Location of Installation Unknown

4. Identification

(a) Component Support I.D. No.	(b) Canadian Registration No.	(c) Applicable Drawings with Last Rev. & Date	(d) Stress Report or Load Capacity Data Sheet	(e) Type of Component Support	(f) Class	(g) Nat'l Board No.	(h) Year Built
(1) 9775-9802,	None	1801103-07-H	DR-1352-Rev. B	Linear	1	None	1981
(2) 9803-9854,	"	"	"	"	"	"	"
(3) 9855-9868	"	"	"	"	"	"	"
(4)							
(5)							
(6) MS-996N(T), SIN 9862							
(7)							
(8)							
(9) Philip Smith							
(10)							

5. Remarks: 7/18/05.

REVIEWED 8-30-83 BY [illegible]
STASCO ENGINEERING
[illegible]
STASCO VOA REP.

CERTIFICATE OF COMPLIANCE

We certify that the statements made in this report are correct and that these components supports conform to the rules of construction of the ASME Code for Nuclear Power Plant Components, Section III, Division 1, Edition 1977, Addenda Winter '77 (Date)
Code Case No. 1644-7

Date 17 March 1981 Signed Pacific Scientific (NPT Certificate Holder) by Bill Jenkins

Our ASME Certificate of Authorization No. 1198 to use the Component Supports (NPT)

Symbol expires Aug. 4, 1981 (Date)

CERTIFICATION OF DESIGN

Design Information on File at Pacific Scientific

Stress Report or Load Capacity Data Sheets on File at:
Pacific Scientific
Filed Per NA 3256

Design Specifications Certified by (1) Leo E. Ay PE State California

Reg. No. 13533

Stress Analysis Report or Load Capacity Data Sheets Certified by (1) Leo E. Ay

State California Reg. No. 13533

(1) First name only, signature not required.

* Supplemental sheets in form of lists, sketches or drawings may be used provided (1) size is 8½ in., (2) information in items 1, 2, 3, 4, 5 on this Data Report is included on each sheet, and (3) each sheet is numbered and number of sheets is recorded at top of this form.

FORM NF-1 (Back)

CERTIFICATE OF SHOP INSPECTION

I the undersigned, holding a valid commission issued by the National Board of Boiler and Pressure Vessel Inspectors and the State or Province of California and employed by HSBI&I Co. of Hartford, CT have inspected the component supports described in this Data Report on 3/17 19 81 and state that to the best of my knowledge and belief the NPT Certificate Holder has constructed these component supports in accordance with the ASME Code for Nuclear Power Plant Components.

By signing this certificate, neither the Inspector nor his employer makes any warranty, expressed or implied, concerning the component supports described in this Data Report. Furthermore, neither the Inspector nor his employer shall be liable in any manner for any personal injury or property damage or a loss of any kind arising from or connected with this inspection.

Date 3/17/81

Signed William Meyer Commissions Ca. #1494
(Nat'l Bd., State, Prov., and No.)

CERTIFICATION OF FIELD INSPECTION

I, the undersigned, holding a valid commission issued by the National Board of Boiler and Pressure Vessel Inspectors and the State or Province of _____ and employed by _____ of _____ have compared the statements in this Data Report with the described component supports and st that the parts referred to as data items _____, not included in the certificate of shop inspection, have be inspected by me and that to the best of my knowledge and belief the NPT Certificate Holder has constructed these component supports in accordance with the ASME Code for Nuclear Power Plant Components.

By signing this certificate neither the Inspector nor his employer makes any warranty, expressed or implied, concerning the component supports described in this Data Report. Furthermore, neither the inspector nor his employer shall be liable in any manner for any personal injury or property damage or a loss of any kind arising from or connected with this inspection.

Date _____

Signed _____ Commissions _____
(Nat'l Bd., State, Prov., and No.)

REVIEWED 8.30.83 BY
SEASCO ENGINEERING
VERIFIED BY
SEASCO VQA REP.

WOT No 01067751 01

ENERGY NORTHWEST
People·Vision·Solutions

FORM NIS-2 OWNER'S REPORT FOR REPAIRS OR REPLACEMENTS
As Required By The Provisions Of The ASME Code Section XI

Date: 07/18/05
Sheet: 1 Of 1
Unit: Not Applicable

1. **Owner:** Energy Northwest
   Address: Columbia Generating Station, North Power Plant Loop, Richland, Washington, 99352
2. **Plant:** Columbia Generating Station
   Address: Columbia Generating Station, North Power Plant Loop, Richland, Washington, 99352
3. **(a) Work Performed By:** Energy Northwest
   (b) Repair Organization P.O. No, Job No, etc.: Energy Northwest
   (c) Type Code Symbol Stamp: Not Applicable
   (d) Certificate Of Authorization No.: Not Applicable
   (e) Expiration Date: Not Applicable
4. **Identification Of System:** Main Steam (MS) System
5. **(a) Applicable Construction Code:** ASME Section III, Code Class 2, 1971 Edition with Winter 1973 Addenda, Code Case: None
   (b) Applicable Edition Of ASME Section XI Utilized For Repairs Or Replacements: 1989 Edition with no Addenda, Code Case: None
6. **Identification Of Components Repaired Or Replaced And Replacement Components**

Name Of Component	Name Of Manufacturer	Manufacturer's Serial No	National Board No	Other I.D.	Year Built	Repaired, Replaced Or Replacement	ASME Code Stamped (Yes Or No) Code Class
MS(1)-4A	WPPSS*	MS(1)-4A-P1	N/A	N/A	1983	----------	Yes, Code Class 2
MS-114(S)	Pacific Scientific	9921	N/A	PSA-10	1981	Replaced	No, Code Class **
MS-114(S)	Pacific Scientific	7122	N/A	PSA-10	1980	Replacement	Yes, Code Class 1

7. **Description Of Work Performed:** Replaced existing snubber for the support. The replacement work was performed as follows:
   1) Removed existing snubber.
   2) Installed pretested replacement snubber.
   3) Torqued the fasteners to the required torque value.
   4) Performed visual examination on the installed replacement snubber. Visual examination results acceptable.

NOTES -

1) * Company name changed from Washington Public Power Supply System (WPPSS) to Energy Northwest in 1999.
2) ** ASME Section III, Code Class NF snubber.
3) ASME Section III, Code Class NF(1) snubber.
4) The replacement snubber is certified to comply with ASME Section III, Code Class NF(1), 1977 Edition with Winter 1977 Addenda requirements and ASME Code Case No 1644-7.
5) The existing ASME Code Stamped piping system in which the replacement snubber was installed is Main Steam (MS) piping system MS(1)-4A-P1. This piping system is certified to comply with ASME Section III, Code Class 2, 1971 Edition with Winter 1973 Addenda requirements.

WOT No 01067751 01

ENERGY NORTHWEST
People·Vision·Solutions

FORM NIS-2 OWNER'S REPORT FOR REPAIRS OR REPLACEMENTS (Back)

8 Tests Conducted: Hydrostatic [ ] Pneumatic [ ] Nominal Operating Pressure [ ] None [X]
Test Pressure: Psig Test Temperature: °F
Component Design Pressure: Psig Temperature: °F

9. Remarks (Applicable Manufacturer's Data Reports to be attached): See attached NF-1 Code Data Report for the replacement snubber, Serial No 7122.

CERTIFICATE OF COMPLIANCE

We certify that the statements made in this Owner's Report are correct and this replacement conforms to the rules of the ASME Code, Section XI.
Type Code Symbol Stamp: Not Applicable
Certificate Of Authorization No.: Not Applicable
Expiration Date: Not Applicable

Prepared By Kuldip Singh - Program Lead Engineer (PLE) Signed By Kuldip Singh - Program Lead Engineer (PLE)

Date 7/19/05 Date 7/19/05

CERTIFICATE OF INSERVICE INSPECTION

I, the undersigned, holding a valid commission issued by the National Board of Boiler and Pressure Vessel Inspectors and the State of Washington and employed by Hartford Steam Boiler Of Connecticut of Hartford, Connecticut have inspected the components described in this Owner's Report during the period 5-9-2005 to 7-22-2005 and state to the best of my knowledge and belief, the Owner has performed examinations and taken corrective measures described in this Owner's Report in accordance with the requirements of the ASME Code, Section XI.
By signing this certificate neither the Inspector nor his employer makes any warranty, expressed or implied, concerning the examinations and corrective measures described in this Owner's Report. Furthermore, neither the Inspector nor his employer shall be liable in any manner for any personal injury or property damage or a loss of any kind arising from or connected with this inspection.

Inspector's Signature Commissions 10655 (W) A, B, N, I
National Board, State, and Endorsements

Date 7-22-2005

WOT No. 0106-7751 01

FORM NF-1 NPT CERTIFICATE HOLDERS' DATA REPORT FOR COMPONENT SUPPORTS*

As Required by the Provisions of the ASME Code Rules, Section III, Division 1

#10

E-WZ-210

1. Manufactured by Pacific Scientific 1346 S. State College Blvd. Anaheim, CA. 92803
(Name and address of NPT Certificate Holder)

2. Manufacturer for ITT Grinnell Corp. 621 Dana Street N.E. Warren, Ohio 44481
(Name and address of purchaser or owner)

3. Location of Installation Unknown

4. Identification

(a) Component Support I.D. No.	(b) Canadian Registration No.	(c) Applicable Drawings with Last Rev. & Date	(d) Stress Report or Load Capacity Data Sheet	(e) Type of Component Support	(f) Class	(g) Nat'l Board No.	(h) Year Built
(1) 7082-7137	None	1801103-07-H	DR-1352-Rev. B	Linear	1	None	1980
(2)							
(3)							
(4)							
(5) MS-114(S), S/N 7122							
(6)							
(7)							
(8) Philip Gies							
(9)							
(10) 7/18/05							

5. Remarks:

CERTIFICATE OF COMPLIANCE

We certify that the statements made in this report are correct and that these components supports conform to the rules of construction of the ASME Code for Nuclear Power Plant Components, Section III, Division 1, Edition 1977, Addenda Winter '77 (Date), Code Case No. 1644-7

Date 22 April 1980 Signed Pacific Scientific (NPT Certificate Holder) by Bill Jerkins

Our ASME Certificate of Authorization No. 1198 to use the Component Supports (NPT)

Symbol expires Aug. 4, 1981 (Date).

CERTIFICATION OF DESIGN

Design Information on File at Pacific Scientific

Stress Report or Load Capacity Data Sheets on File at:
Pacific Scientific
Filed Per NA 3256

Design Specifications Certified by (1) Leo E. Ay PE State California

Reg. No. 13533.

Stress Analysis Report or Load Capacity Data Sheets Certified by (1) Leo E. Ay

PE State California Reg. No. 13533.

(1) List name only, signature not required.

REVIEWED BY JAB
6-4-82
EBASCO ENGINEERING
REVIEW VERIFIED BY
EBASCO QA REP.

*Supplemental sheets in form of lists, sketches or drawings may be used provided (1) size is 8½ in., (2) information in items 1, 2, 4c, 4g on this Data Report is included on each sheet, and (3) each sheet is numbered and number of sheets is recorded at top of this form.

(10/77)

FORM NF-1 (Back)

CERTIFICATE OF SHOP INSPECTION

I, the undersigned, holding a valid commission issued by the National Board of Boiler and Pressure Vessel Inspectors and the State or Province of California and employed by HSBI&I Co. of Hartford, CT have inspected the component supports described in this Data Report on 4/23/80, 19 ___ and state that to the best of my knowledge and belief the NPT Certificate Holder has constructed these component supports in accordance with the ASME Code for Nuclear Power Plant Components.

By signing this certificate, neither the Inspector nor his employer makes any warranty, expressed or implied, concerning the component supports described in this Data Report. Furthermore, neither the Inspector nor his employer shall be liable in any manner for any personal injury or property damage or a loss of any kind arising from or connected with this inspection.

Date 4/23/80.

Signed William Meyer Commissions Ca. #1494
(Nat'l Bd., State, Prov., and No.)

CERTIFICATION OF FIELD INSPECTION

I, the undersigned, holding a valid commission issued by the National Board of Boiler and Pressure Vessel Inspectors and the State or Province of ___ and employed by ___ of ___ have compared the statements in this Data Report with the described component supports and state that the parts referred to as data items ___, not included in the certificate of shop inspection, have be inspected by me and that to the best of my knowledge and belief the NPT Certificate Holder has constructed these component supports in acco ance with the ASME Code for Nuclear Power Plant Components.

By signing this certificate neither the Inspector nor his employer makes any warranty, expressed or implied, concerning the component supports described in this Data Report. Furthermore, neither the inspector nor his employer shall be liable in any manner for any personal injury or property damage or a loss of any kind arising from or connected with this inspection.

Date ___.

Signed ___ Commissions ___
(Nat'l Bd., State, Prov., and No.)

WOT No 01067751 01

ENERGY NORTHWEST
People·Vision·Solutions

FORM NIS-2 OWNER'S REPORT FOR REPAIRS OR REPLACEMENTS
As Required By The Provisions Of The ASME Code Section XI

Date: 07/18/05
Sheet: 1 Of 1
Unit: Not Applicable

1. **Owner:** Energy Northwest
   Address: Columbia Generating Station, North Power Plant Loop, Richland, Washington, 99352
2. **Plant:** Columbia Generating Station
   Address: Columbia Generating Station, North Power Plant Loop, Richland, Washington, 99352
3. (a) **Work Performed By:** Energy Northwest
   (b) **Repair Organization P.O. No, Job No, etc.:** Energy Northwest
   (c) **Type Code Symbol Stamp:** Not Applicable
   (d) **Certificate Of Authorization No.:** Not Applicable
   (e) **Expiration Date:** Not Applicable
4. **Identification Of System:** Main Steam (MS) System
5. (a) **Applicable Construction Code:** ASME Section III, Code Class 3, 1971 Edition with Winter 1973 Addenda, Code Case: None
   (b) **Applicable Edition Of ASME Section XI Utilized For Repairs Or Replacements:** 1989 Edition with no Addenda, Code Case: None
6. **Identification Of Components Repaired Or Replaced And Replacement Components**

Name Of Component	Name Of Manufacturer	Manufacturer's Serial No	National Board No	Other I.D.	Year Built	Repaired, Replaced Or Replacement	ASME Code Stamped (Yes Or No) Code Class
MS(18)-2-16	WPPSS*	MS(18)-2-16-P1	N/A	N/A	1983	----------	Yes, Code Class 3
MSRV-3D-4	Pacific Scientific	9922	N/A	PSA-10	1981	Replaced	No, Code Class**
MSRV-3D-4	Pacific Scientific	9576	N/A	PSA-10	1981	Replacement	Yes, Code Class 1

7. **Description Of Work Performed:** Replaced existing snubber for support. The replacement work was performed as follows:
   1) Removed existing snubber.
   2) Installed pretested replacement snubber.
   3) Torqued the fasteners to the required torque value.
   4) Performed visual examination on the installed replacement snubber. Visual examination results acceptable.

NOTES -

1) * Company name changed from Washington Public Power Supply System (WPPSS) to Energy Northwest in 1999.
2) ** ASME Section III, Code Class NF snubber.
3) ASME Section III, Code Class NF(1) snubber.
4) The replacement snubber is certified to comply with ASME Section III, Code Class NF(1), 1977 Edition with Winter 1977 Addenda requirements and ASME Code Case No 1644-7.
5) The existing ASME Code Stamped piping system in which the replacement snubber was installed is Main Steam (MS) piping system MS(18)-2-16-P1. This piping system is certified to comply with ASME Section III, Code Class 3, 1971 Edition with Winter 1973 Addenda requirements.

WOT No 01067751 01

ENERGY NORTHWEST
People·Vision·Solutions

FORM NIS-2 OWNER'S REPORT FOR REPAIRS OR REPLACEMENTS (Back)

8 Tests Conducted: Hydrostatic [ ] Pneumatic [ ] Nominal Operating Pressure [ ] None [X]
Test Pressure: Psig Test Temperature: °F
Component Design Pressure: Psig Temperature: °F

9. Remarks (Applicable Manufacturer's Data Reports to be attached): See attached NF-1 Code Data Reports for the replacement snubber, Serial No 9576.

CERTIFICATE OF COMPLIANCE

We certify that the statements made in this Owner's Report are correct and this replacement conforms to the rules of the ASME Code, Section XI.
Type Code Symbol Stamp: Not Applicable
Certificate Of Authorization No.: Not Applicable
Expiration Date: Not Applicable

Prepared By Kuldip Singh - Program Lead Engineer (PLE) Signed By Kuldip Singh - Program Lead Engineer (PLE)

Date 7/19/05 Date 7/19/05

CERTIFICATE OF INSERVICE INSPECTION

I, the undersigned, holding a valid commission issued by the National Board of Boiler and Pressure Vessel Inspectors and the State of Washington and employed by Hartford Steam Boiler Of Connecticut of Hartford, Connecticut have inspected the components described in this Owner's Report during the period 5-9-2005 to 7-22-2005 and state to the best of my knowledge and belief, the Owner has performed examinations and taken corrective measures described in this Owner's Report in accordance with the requirements of the ASME Code, Section XI.
By signing this certificate neither the Inspector nor his employer makes any warranty, expressed or implied, concerning the examinations and corrective measures described in this Owner's Report. Furthermore, neither the Inspector nor his employer shall be liable in any manner for any personal injury or property damage or a loss of any kind arising from or connected with this inspection.

Inspector's Signature Commissions 10655(W) A,B,N,I
National Board, State, and Endorsements

Date 7-22-2005

WOT No. 01667751 01

As Required by the Provisions of the ASME Code Rules, Section III, Division 1 #10

E-WZ-090

1. Manufactured by Pacific Scientific 1346 S. State College Blvd Anaheim, CA. 92803
(Name and address of NPT Certificate Holder)

2. Manufactured for ITT Grinnell Corp. 621 Dana Street N.E. Warren, Ohio 44481
(Name and address of purchaser or owner)

Location of Installation Unknown

4. Identification

	(a) Component Support I.D. No.	(b) Canadian Registration No.	(c) Applicable Drawings with Last Rev. & Date	(d) Stress Report or Load Capacity Data Sheet	(e) Type of Component Support	(f) Class	(g) Nat'l Board No.	(h) Year Built
(1)	9526-9621	None	1801103-07-H	DR-1352-Rev. B	Linear	1	None	1981
(2)								
(3)								
(4)	MSRV-3D-4, S/N 9576							
(5)								
(6)								
(7)								
(8)								
(9)				7/18/05				
(10)								

5. Remarks:

CERTIFICATE OF COMPLIANCE

I certify that the statements made in this report are correct and that these components supports conform to the rules of construction of the ASME Code for Nuclear Power Plant Components, Section III, Division 1, Edition 1977, Addenda Winter '77 (Date).

Code Case No. 1644-7

Date 2/13/81 Signed Pacific Scientific (NPT Certificate Holder) by Rosalie A. Nanta

Our ASME Certificate of Authorization No. 1198 to use the Component Supports (NPT)

Symbol expires Aug. 4, 1981 (Date).

CERTIFICATION OF DESIGN

Design Information on File at Pacific Scientific

Stress Report or Load Capacity Data Sheets on File at
Pacific Scientific
Filed Per NA 3256

Design Specifications Certified by (1) Leo E. Ay PE State California

Reg. No. 13533.

Stress Analysis Report or Load Capacity Data Sheets Certified by (1) Leo E. Ay

PE State California Reg No. 13533.

(1) List name only, signature not required.

Supplemental sheets in form of lists, sketches or drawings may be used provided (1) size is 8½ in., (2) information in items 1, 2, 4c, 4g on this Data Report is included on each sheet, and (3) each sheet is numbered and number of sheets is recorded at top of this form.

FORM NPT-1 (back)

CERTIFICATE OF SHOP INSPECTION

I the undersigned, holding a valid commission issued by the National Board of Boiler and Pressure Vessel Inspectors and the State or Province of California and employed by ESBI&T Co. of Hartford, CT have inspected the component supports described in this Data Report on 2/14 19 81 and state that to the best of my knowledge and belief the NPT Certificate Holder has constructed these component supports in accordance with the ASME Code for Nuclear Power Plant Components.

By signing this certificate, neither the Inspector nor his employer makes any warranty, expressed or implied, concerning the component supports described in this Data Report. Furthermore, neither the Inspector nor his employer shall be liable in any manner for any personal injury or property damage or a loss of any kind arising from or connected with this inspection.

Date 2/14/81

Signed William Meyer Commissions Ca. #1494
(Nat'l Bd., State, Prov., and No.)

CERTIFICATION OF FIELD INSPECTION

I, the undersigned, holding a valid commission issued by the National Board of Boiler and Pressure Vessel Inspectors and the State or Province of _____ and employed by _____ of _____ have compared the statements in this Data Report with the described component supports and state that the parts referred to as data items _____, not included in the certificate of shop inspection, have been inspected by me and that to the best of my knowledge and belief the NPT Certificate Holder has constructed these component supports in accordance with the ASME Code for Nuclear Power Plant Components.

By signing this certificate neither the Inspector nor his employer makes any warranty, expressed or implied, concerning the component supports described in this Data Report. Furthermore, neither the inspector nor his employer shall be liable in any manner for any personal injury or property damage or a loss of any kind arising from or connected with this inspection.

Date _____

Signed _____ Commissions _____
(Nat'l Bd., State, Prov., and No.)

WOT No 01067751 01

ENERGY NORTHWEST
People·Vision·Solutions

FORM NIS-2 OWNER'S REPORT FOR REPAIRS OR REPLACEMENTS
As Required By The Provisions Of The ASME Code Section XI

Date: 07/18/05
Sheet: 1 Of 1
Unit: Not Applicable

1. **Owner:** Energy Northwest
   Address: Columbia Generating Station, North Power Plant Loop, Richland, Washington, 99352
2. **Plant:** Columbia Generating Station
   Address: Columbia Generating Station, North Power Plant Loop, Richland, Washington, 99352
3. **(a) Work Performed By:** Energy Northwest
   (b) Repair Organization P.O. No, Job No, etc.: Energy Northwest
   (c) Type Code Symbol Stamp: Not Applicable
   (d) Certificate Of Authorization No.: Not Applicable
   (e) Expiration Date: Not Applicable
4. **Identification Of System:** Main Steam (MS) System
5. **(a) Applicable Construction Code:** ASME Section III, Code Class 2, 1971 Edition with Winter 1973 Addenda, Code Case: None
   (b) Applicable Edition Of ASME Section XI Utilized For Repairs Or Replacements: 1989 Edition with no Addenda, Code Case: None
6. **Identification Of Components Repaired Or Replaced And Replacement Components**

Name Of Component	Name Of Manufacturer	Manufacturer's Serial No	National Board No	Other I.D.	Year Built	Repaired, Replaced Or Replacement	ASME Code Stamped (Yes Or No) Code Class
MS(1)-4B	WPPSS*	MS(1)-4B-P1	N/A	N/A	1983	----------	Yes, Code Class 2
MS-145	Pacific Scientific	9897	N/A	PSA-10	1981	Replaced	No, Code Class**
MS-145	Pacific Scientific	9805	N/A	PSA-10	1981	Replacement	Yes, Code Class 1

7. **Description Of Work Performed:** Replaced existing snubber for the support. The replacement work was performed as follows:
   1) Removed existing snubber.
   2) Installed pretested replacement snubber.
   3) Torqued the fasteners to the required torque value.
   4) Performed visual examination on the installed replacement snubber. Visual examination results acceptable.

NOTES -

1) * Company name changed from Washington Public Power Supply System (WPPSS) to Energy Northwest in 1999.
2) ** ASME Section III, Code Class NF snubber.
3) ASME Section III, Code Class NF(1) snubber.
4) The replacement snubber is certified to comply with ASME Section III, Code Class NF(1), 1977 Edition with Winter 1977 Addenda requirements and ASME Code Case No 1644-7.
5) The existing ASME Code Stamped piping system in which the replacement snubber was installed is Main Steam (MS) piping system MS(1)-4B-P1. This piping system is certified to comply with ASME Section III, Code Class 2, 1971 Edition with Winter 1973 Addenda requirements.

WOT No 01067751 01

ENERGY NORTHWEST
People·Vision·Solutions

FORM NIS-2 OWNER'S REPORT FOR REPAIRS OR REPLACEMENTS (Back)

8 Tests Conducted: Hydrostatic [ ] Pneumatic [ ] Nominal Operating Pressure [ ] None [X]
Test Pressure: Psig Test Temperature: °F
Component Design Pressure: Psig Temperature: °F

9. Remarks (Applicable Manufacturer's Data Reports to be attached): See attached NF-1 Code Data Report for the replacement snubber, Serial No 9805.

CERTIFICATE OF COMPLIANCE

We certify that the statements made in this Owner's Report are correct and this replacement conforms to the rules of the ASME Code, Section XI.
Type Code Symbol Stamp: Not Applicable
Certificate Of Authorization No.: Not Applicable
Expiration Date: Not Applicable

Prepared By Kuldip Singh - Program Lead Engineer (PLE) Signed By Kuldip Singh - Program Lead Engineer (PLE)
Date 7/19/05 Date 7/19/05.

CERTIFICATE OF INSERVICE INSPECTION

I, the undersigned, holding a valid commission issued by the National Board of Boiler and Pressure Vessel Inspectors and the State of Washington and employed by Hartford Steam Boiler Of Connecticut of Hartford, Connecticut have inspected the components described in this Owner's Report during the period 5-9-2005 to 7-22-2005 and state to the best of my knowledge and belief, the Owner has performed examinations and taken corrective measures described in this Owner's Report in accordance with the requirements of the ASME Code, Section XI.
By signing this certificate neither the Inspector nor his employer makes any warranty, expressed or implied, concerning the examinations and corrective measures described in this Owner's Report. Furthermore, neither the Inspector nor his employer shall be liable in any manner for any personal injury or property damage or a loss of any kind arising from or connected with this inspection.

Inspector's Signature Commissions 10655W A, B, N, I
National Board, State, and Endorsements

Date 7-22-2005

WOT No. 01067751 01

FORM NF-1 NPT CERTIFICATE HOLDERS' DATA REPORT FOR COMPONENT SUPPORTS*

As Required by the Provisions of the ASME Code Rules, Section III, Division 1 #70

E-WZ-767-00

1. Manufactured by Pacific Scientific 1346 S. State College Blvd Anaheim, CA. 92803
(Name and address of NPT Certificate Holder)

2. Manufacturer for ITT Grinnell Corp. 621 Dana Street N.E. Warren, Ohio 44481
(Name and address of purchaser or owner)

3. Location of Installation Unknown

4. Identification

(a) Component Support I.D. No.	(b) Canadian Registration No.	(c) Applicable Drawings with Last Rev. & Date	(d) Stress Report or Load Capacity Data Sheet	(e) Type of Component Support	(f) Class	(g) Nat'l Board No.	(h) Year Built
(1) 9775-9802,	None	1801103-07-H	DR-1352-Rev. B	Linear	1	None	1981
(2) 9803-9854,	"	"	"	"	"	"	"
(3) 9855-9868	"	"	"	"	"	"	"
(4)							
(5)							
(6) MS-145, SIN 9805							
(7)							
(8)							
(9)							
(10)							

5. Remarks: 7/18/05

REVIEWED 8-30-85 BY [illegible]
TRASCO ENGINEERING
TRASCO NDA REP.

CERTIFICATE OF COMPLIANCE

We certify that the statements made in this report are correct and that these components supports conform to the rules of construction of the ASME Code for Nuclear Power Plant Components, Section III, Division 1, Edition 1977, Addenda Winter '77 (Date), Code Case No. 1644-7

Date 17 March 1981 Signed Pacific Scientific (NPT Certificate Holder) by Bill Jenkins

Our ASME Certificate of Authorization No. 1198 to use the Component Supports (NPT)

Symbol expires Aug. 4, 1981 (Date)

CERTIFICATION OF DESIGN

Design Information on File at Pacific Scientific

Stress Report or Load Capacity Data Sheets on File at: Pacific Scientific

Filed Per NA 3256

Design Specifications Certified by (1) Leo E. Ay PE State California

Reg. No. 13533

Stress Analysis Report or Load Capacity Data Sheets Certified by (1) Leo E. Ay

State California Reg. No. 13533

(1) Print name only, signature not required.

*Supplemental sheets in form of lists, sketches or drawings may be used provided (1) size is 8½ in., (2) information in items 1, 2, 3, 4g on this Data Report is included on each sheet, and (3) each sheet is numbered and number of sheets is recorded at top of this form.

FORM NF-1 (Back)

CERTIFICATE OF SHOP INSPECTION

I the undersigned, holding a valid commission issued by the National Board of Boiler and Pressure Vessel Inspectors and the State or Province of California and employed by HSBI&I Co. of Hartford, CT have inspected the component supports described in this Data Report on 3/17, 1981 and state that to the best of my knowledge and belief the NPT Certificate Holder has constructed these component supports in accordance with the ASME Code for Nuclear Power Plant Components.

By signing this certificate, neither the Inspector nor his employer makes any warranty, expressed or implied, concerning the component supports described in this Data Report. Furthermore, neither the Inspector nor his employer shall be liable in any manner for any personal injury or property damage or a loss of any kind arising from or connected with this inspection.

Date 3/17/81

Signed William Meyer Commissions Ca. #1494
(Nat'l Bd., State, Prov., and No.)

CERTIFICATION OF FIELD INSPECTION

I, the undersigned, holding a valid commission issued by the National Board of Boiler and Pressure Vessel Inspectors and the State or Province of _____ and employed by _____ of _____ have compared the statements in this Data Report with the described component supports and st that the parts referred to as data items _____, not included in the certificate of shop inspection, have be inspected by me and that to the best of my knowledge and belief the NPT Certificate Holder has constructed these component supports in accordance with the ASME Code for Nuclear Power Plant Components.

By signing this certificate neither the Inspector nor his employer makes any warranty, expressed or implied, concerning the component supports described in this Data Report. Furthermore, neither the inspector nor his employer shall be liable in any manner for any personal injury or property damage or a loss of any kind arising from or connected with this inspection.

Date _____

Signed _____ Commissions _____
(Nat'l Bd., State, Prov., and No.)

REVIEWED 8-30-83 BY
SEASCO ENGINEERING
VERIFIED BY
SEASCO VQA REP.

WOT No 01067751 01

ENERGY NORTHWEST
People·Vision·Solutions

FORM NIS-2 OWNER'S REPORT FOR REPAIRS OR REPLACEMENTS
As Required By The Provisions Of The ASME Code Section XI

Date: 07/18/05
Sheet: 1 Of 1
Unit: Not Applicable

1. **Owner:** Energy Northwest
   Address: Columbia Generating Station, North Power Plant Loop, Richland, Washington, 99352
2. **Plant:** Columbia Generating Station
   Address: Columbia Generating Station, North Power Plant Loop, Richland, Washington, 99352
3. **(a) Work Performed By:** Energy Northwest
   (b) Repair Organization P.O. No, Job No, etc.: Energy Northwest
   (c) Type Code Symbol Stamp: Not Applicable
   (d) Certificate Of Authorization No.: Not Applicable
   (e) Expiration Date: Not Applicable
4. **Identification Of System:** Main Steam (MS) System
5. **(a) Applicable Construction Code:** ASME Section III, Code Class 2, 1971 Edition with Winter 1973 Addenda, Code Case: None
   (b) Applicable Edition Of ASME Section XI Utilized For Repairs Or Replacements: 1989 Edition with no Addenda, Code Case: None
6. **Identification Of Components Repaired Or Replaced And Replacement Components**

Name Of Component	Name Of Manufacturer	Manufacturer's Serial No	National Board No	Other I.D.	Year Built	Repaired, Replaced Or Replacement	ASME Code Stamped (Yes Or No) Code Class
MS(1)-4C	WPPSS*	MS(1)-4C-P3	N/A	N/A	1983	----------	Yes, Code Class 2
MS-38(T)	Pacific Scientific	9947	N/A	PSA-10	1981	Replaced	No, Code Class**
MS-38(T)	Pacific Scientific	7095	N/A	PSA-10	1980	Replacement	Yes, Code Class 1

7. **Description Of Work Performed:** Replaced existing snubber for the support. The replacement work was performed as follows:
   1) Removed existing snubber.
   2) Installed pretested replacement snubber.
   3) Torqued the fasteners to the required torque value.
   4) Performed visual examination on the installed replacement snubber. Visual examination results acceptable.

NOTES -

1) * Company name changed from Washington Public Power Supply System (WPPSS) to Energy Northwest in 1999.
2) ** ASME Section III, Code Class NF snubber.
3) ASME Section III, Code Class NF(1) snubber.
4) The replacement snubber is certified to comply with ASME Section III, Code Class NF(1), 1977 Edition with Winter 1977 Addenda requirements and ASME Code Case No 1644-7.
5) The existing ASME Code Stamped piping system in which the replacement snubber was installed is Main Steam (MS) piping system MS(1)-4C-P3. This piping system is certified to comply with ASME Section III, Code Class 2, 1971 Edition with Winter 1973 Addenda requirements.

WOT No 01067751 01

ENERGY NORTHWEST
People·Vision·Solutions

FORM NIS-2 OWNER'S REPORT FOR REPAIRS OR REPLACEMENTS (Back)

8 Tests Conducted: Hydrostatic [ ] Pneumatic [ ] Nominal Operating Pressure [ ] None [X]
Test Pressure: Psig Test Temperature: °F
Component Design Pressure: Psig Temperature: °F

9. Remarks (Applicable Manufacturer's Data Reports to be attached): See attached NF-1 Code Data Report for the replacement snubber, Serial No 7095.

CERTIFICATE OF COMPLIANCE

We certify that the statements made in this Owner's Report are correct and this replacement conforms to the rules of the ASME Code, Section XI.
Type Code Symbol Stamp: Not Applicable
Certificate Of Authorization No.: Not Applicable
Expiration Date: Not Applicable

Prepared By Kuldip Singh - Program Lead Engineer (PLE) Signed By Kuldip Singh - Program Lead Engineer (PLE)
Date 7/19/05 Date 7/19/05

CERTIFICATE OF INSERVICE INSPECTION

I, the undersigned, holding a valid commission issued by the National Board of Boiler and Pressure Vessel Inspectors and the State of Washington and employed by Hartford Steam Boiler Of Connecticut of Hartford, Connecticut have inspected the components described in this Owner's Report during the period 5-02-2005 to 8-02-2005 and state to the best of my knowledge and belief, the Owner has performed examinations and taken corrective measures described in this Owner's Report in accordance with the requirements of the ASME Code, Section XI.
By signing this certificate neither the inspector nor his employer makes any warranty, expressed or implied, concerning the examinations and corrective measures described in this Owner's Report. Furthermore, neither the inspector nor his employer shall be liable in any manner for any personal injury or property damage or a loss of any kind arising from or connected with this inspection.

Inspector's Signature Commissions 10655W A, B, N, I
National Board, State, and Endorsements

Date 8-02-2005

WO7 No. 0106-7751 01

FORM NF-1 NPT CERTIFICATE HOLDERS' DATA REPORT FOR COMPONENT SUPPORTS*

As Required by the Provisions of the ASME Code Rules, Section III, Division 1

#10

E-WZ-210

1. Manufactured by Pacific Scientific 1346 S. State College Blvd Anaheim, CA 92803
(Name and address of NPT Certificate Holder)

2. Manufacturer for ITT Grinnell Corp. 621 Dana Street N.E. Warren, Ohio 44481
(Name and address of purchaser or owner)

3. Location of Installation Unknown

4. Identification

	(a) Component Support I.D. No.	(b) Canadian Registration No.	(c) Applicable Drawings with Last Rev. & Date	(d) Stress Report or Load Capacity Data Sheet	(e) Type of Component Support	(f) Class	(g) Nat'l Board No.	(h) Year Built
(1)	7082-7137	None	1801103-07-H	DR-1352-Rev. B	Linear	1	None	1980
(2)								
(3)								
(4)								
(5)	MS-38(T), S/N 7095							
(6)								
(7)								
(8)								
(9)								
(10)								

5. Remarks:

CERTIFICATE OF COMPLIANCE

We certify that the statements made in this report are correct and that these components supports conform to the rules of construction of the ASME Code for Nuclear Power Plant Components, Section III, Division 1, Edition 1977, Addenda Winter '77 (Date).

Code Case No. 1644-7

Date 22 April 1980 Signed Pacific Scientific (NPT Certificate Holder) by Bill Jerkins

Our ASME Certificate of Authorization No. 1198 to use the Component Supports (NPT)

Symbol expires Aug. 4, 1981 (Date).

CERTIFICATION OF DESIGN

Design Information on File at Pacific Scientific

Stress Report or Load Capacity Data Sheets on File at:
Pacific Scientific
Filed Per NA 3256

Design Specifications Certified by (1) Leo E. Ay PE State California

Reg. No. 13533.

Stress Analysis Report or Load Capacity Data Sheets Certified by (1) Leo E. Ay

PE State California Reg. No. 13533.

(1) List name only, signature not required.

REVIEWED BY 6-4-82 JAB
EBASCO ENGINEERING
REVIEW VERIFIED BY
EBASCO QA REP.

*Supplemental sheets in form of lists, sketches or drawings may be used provided (1) size is 8½ in., (2) information in items 1, 2, 4c, 4g on this Data Report is included on each sheet, and (3) each sheet is numbered and number of sheets is recorded at top of this form.

(10/77)

FORM NF-1 (Back)

CERTIFICATE OF SHOP INSPECTION

I, the undersigned, holding a valid commission issued by the National Board of Boiler and Pressure Vessel Inspectors and the State or Province of California and employed by HSBI&I Co. of Hartford, CT have inspected the component supports described in this Data Report on 4/23/80, 19 ___ and state that to the best of my knowledge and belief the NPT Certificate Holder has constructed these component supports in accordance with the ASME Code for Nuclear Power Plant Components.

By signing this certificate, neither the Inspector nor his employer makes any warranty, expressed or implied, concerning the component supports described in this Data Report. Furthermore, neither the Inspector nor his employer shall be liable in any manner for any personal injury or property damage or a loss of any kind arising from or connected with this inspection.

Date 4/23/80.

Signed William Meyer Commissions Ca. #1494
(Nat'l Bd., State, Prov., and No.)

CERTIFICATION OF FIELD INSPECTION

I, the undersigned, holding a valid commission issued by the National Board of Boiler and Pressure Vessel Inspectors and the State or Province of ___ and employed by ___ of ___ have compared the statements in this Data Report with the described component supports and state that the parts referred to as data items ___, not included in the certificate of shop inspection, have been inspected by me and that to the best of my knowledge and belief the NPT Certificate Holder has constructed these component supports in accordance with the ASME Code for Nuclear Power Plant Components.

By signing this certificate neither the Inspector nor his employer makes any warranty, expressed or implied, concerning the component supports described in this Data Report. Furthermore, neither the Inspector nor his employer shall be liable in any manner for any personal injury or property damage or a loss of any kind arising from or connected with this inspection.

Date ___.

Signed ___ Commissions ___
(Nat'l Bd., State, Prov., and No.)

WOT No 01067751 01

ENERGY NORTHWEST
People·Vision·Solutions

FORM NIS-2 OWNER'S REPORT FOR REPAIRS OR REPLACEMENTS
As Required By The Provisions Of The ASME Code Section XI

Date: 07/18/05
Sheet: 1 Of 1
Unit: Not Applicable

1. **Owner:** Energy Northwest
   Address: Columbia Generating Station, North Power Plant Loop, Richland, Washington, 99352
2. **Plant:** Columbia Generating Station
   Address: Columbia Generating Station, North Power Plant Loop, Richland, Washington, 99352
3. (a) **Work Performed By:** Energy Northwest
   (b) **Repair Organization P.O. No, Job No, etc.:** Energy Northwest
   (c) **Type Code Symbol Stamp:** Not Applicable
   (d) **Certificate Of Authorization No.:** Not Applicable
   (e) **Expiration Date:** Not Applicable
4. **Identification Of System:** Main Steam (MS) System
5. (a) **Applicable Construction Code:** ASME Section III, Code Class 3, 1971 Edition with Winter 1973 Addenda, Code Case: None
   (b) **Applicable Edition Of ASME Section XI Utilized For Repairs Or Replacements:** 1989 Edition with no Addenda, Code Case: None
6. **Identification Of Components Repaired Or Replaced And Replacement Components**

Name Of Component	Name Of Manufacturer	Manufacturer's Serial No	National Board No	Other I.D.	Year Built	Repaired, Replaced Or Replacement	ASME Code Stamped (Yes Or No) Code Class
MS(18)-2-1	WPPSS*	MS(18)-2-1-P1	N/A	N/A	1983	----------	Yes, Code Class 3
MSRV-1A-3	Pacific Scientific	11857	N/A	PSA-10	1981	Replaced	No, Code Class**
MSRV-1A-3	Pacific Scientific	9541	N/A	PSA-10	1981	Replacement	Yes, Code Class 1

7. **Description Of Work Performed:** Replaced existing snubber for support. The replacement work was performed as follows:
   1) Removed existing snubber.
   2) Installed pretested replacement snubber.
   3) Torqued the fasteners to the required torque value.
   4) Performed visual examination on the installed replacement snubber. Visual examination results acceptable.

NOTES -

1) * Company name changed from Washington Public Power Supply System (WPPSS) to Energy Northwest in 1999.
2) ** ASME Section III, Code Class NF snubber.
3) ASME Section III, Code Class NF(1) snubber.
4) The replacement snubber is certified to comply with ASME Section III, Code Class NF(1), 1977 Edition with Winter 1977 Addenda requirements and ASME Code Case No 1644-7.
5) The existing ASME Code Stamped piping system in which the replacement snubber was installed is Main Steam (MS) piping system MS(18)-2-1-P1. This piping system is certified to comply with ASME Section III, Code Class 3, 1971 Edition with Winter 1973 Addenda requirements.

WOT No 01067751 01

ENERGY NORTHWEST
People·Vision·Solutions

FORM NIS-2 OWNER'S REPORT FOR REPAIRS OR REPLACEMENTS (Back)

8 Tests Conducted: Hydrostatic [ ] Pneumatic [ ] Nominal Operating Pressure [ ] None [X]
Test Pressure: Psig Test Temperature: °F
Component Design Pressure: Psig Temperature: °F

9. Remarks (Applicable Manufacturer's Data Reports to be attached): See attached NF-1 Code Data Reports for the replacement snubber, Serial No 9541.

CERTIFICATE OF COMPLIANCE

We certify that the statements made in this Owner's Report are correct and this replacement conforms to the rules of the ASME Code, Section XI.
Type Code Symbol Stamp: Not Applicable
Certificate Of Authorization No.: Not Applicable
Expiration Date: Not Applicable

Prepared By Kuldip Singh - Program Lead Engineer (PLE) Signed By Kuldip Singh - Program Lead Engineer (PLE)
Date 7/19/05 Date 7/19/05

CERTIFICATE OF INSERVICE INSPECTION

I, the undersigned, holding a valid commission issued by the National Board of Boiler and Pressure Vessel Inspectors and the State of Washington and employed by Hartford Steam Boiler Of Connecticut of Hartford, Connecticut have inspected the components described in this Owner's Report during the period 5-09-2005 to 8-02-2005 and state to the best of my knowledge and belief, the Owner has performed examinations and taken corrective measures described in this Owner's Report in accordance with the requirements of the ASME Code, Section XI.
By signing this certificate neither the Inspector nor his employer makes any warranty, expressed or implied, concerning the examinations and corrective measures described in this Owner's Report. Furthermore, neither the Inspector nor his employer shall be liable in any manner for any personal injury or property damage or a loss of any kind arising from or connected with this inspection.

Inspector's Signature Commissions 1016SSW A,B,N,I
National Board, State, and Endorsements

Date 8-02-2005

WOT No. 01067751 01

As Required by the Provisions of the ASME Code Rules, Section III, Division 1 #10

E-WZ-090

1. Manufactured by Pacific Scientific 1346 S. State College Blvd Anaheim, CA 92803
(Name and address of NPT Certificate Holder)

2. Manufactured for ITT Grinnell Corp. 621 Dana Street N.E. Warren, Ohio 44481
(Name and address of purchaser or owner)

Location of Installation Unknown

4. Identification

	(a) Component Support I.D. No.	(b) Canadian Registration No.	(c) Applicable Drawings with Last Rev. & Date	(d) Stress Report or Load Capacity Data Sheet	(e) Type of Component Support	(f) Class	(g) Nat'l Board No.	(h) Year Built
(1)	9526-9621	None	1801103-07-H	DR-1352-Rev. B	Linear	1	None	1981
(2)								
(3)								
(4)	MSRV-1A-3, S/N 9541							
(5)								
(6)								
(7)	Pradip Singh							
(8)								
(9)	7/18/05							
(10)								

5. Remarks:

CERTIFICATE OF COMPLIANCE

We certify that the statements made in this report are correct and that these components supports conform to the rules of construction of the ASME Code for Nuclear Power Plant Components, Section III, Division 1, Edition 1977, Addenda Winter '77 (Date), Code Case No. 1644-7

Date 2/13/81 Signed Pacific Scientific (NPT Certificate Holder) by Rosalie A. Nanz

Our ASME Certificate of Authorization No. 1198 to use the Component Supports (NPT)

Symbol expires Aug. 4, 1981 (Date).

CERTIFICATION OF DESIGN

Design Information on File at Pacific Scientific

Stress Report or Load Capacity Data Sheets on File at Pacific Scientific

Filed Per NA 3256

Design Specifications Certified by (1) Leo E. Ay PE State California

Reg. No. 13533.

Stress Analysis Report or Load Capacity Data Sheets Certified by (1) Leo E. Ay

PE State California Reg. No. 13533.

(1) List name only, signature not required.

Supplemental sheets in form of lists, sketches or drawings may be used provided (1) size is 8½ in., (2) information in items 1, 2, 4c, 4g on this Data Report is included on each sheet, and (3) each sheet is numbered and number of sheets is recorded at top of this form.

FORM NPT-1 (2/82)

CERTIFICATE OF SHOP INSPECTION

I the undersigned, holding a valid commission issued by the National Board of Boiler and Pressure Vessel Inspectors and the State or Province of California and employed by HSBI&I Co. of Hartford, CT have inspected the component supports described in this Data Report on 2/14, 1981 and state that to the best of my knowledge and belief the NPT Certificate Holder has constructed these component supports in accordance with the ASME Code for Nuclear Power Plant Components.

By signing this certificate, neither the Inspector nor his employer makes any warranty, expressed or implied, concerning the component supports described in this Data Report. Furthermore, neither the Inspector nor his employer shall be liable in any manner for any personal injury or property damage or a loss of any kind arising from or connected with this inspection.

Date 2/14/81

Signed William Meyer Commissions Ca. #1494
(Nat'l Bd., State, Prov., and No.)

CERTIFICATION OF FIELD INSPECTION

I, the undersigned, holding a valid commission issued by the National Board of Boiler and Pressure Vessel Inspectors and the State or Province of _____ and employed by _____ of _____ have compared the statements in this Data Report with the described component supports and state that the parts referred to as data items _____, not included in the certificate of shop inspection, have been inspected by me and that to the best of my knowledge and belief the NPT Certificate Holder has constructed these component supports in accordance with the ASME Code for Nuclear Power Plant Components.

By signing this certificate neither the Inspector nor his employer makes any warranty, expressed or implied, concerning the component supports described in this Data Report. Furthermore, neither the inspector nor his employer shall be liable in any manner for any personal injury or property damage or a loss of any kind arising from or connected with this inspection.

Date _____

Signed _____ Commissions _____
(Nat'l Bd., State, Prov., and No.)

WOT No 01067751 01

ENERGY NORTHWEST
People·Vision·Solutions

FORM NIS-2 OWNER'S REPORT FOR REPAIRS OR REPLACEMENTS
As Required By The Provisions Of The ASME Code Section XI

Date: 07/18/05
Sheet: 1 Of 1
Unit: Not Applicable

1. **Owner:** Energy Northwest
   Address: Columbia Generating Station, North Power Plant Loop, Richland, Washington, 99352
2. **Plant:** Columbia Generating Station
   Address: Columbia Generating Station, North Power Plant Loop, Richland, Washington, 99352
3. **(a) Work Performed By:** Energy Northwest
   (b) Repair Organization P.O. No, Job No, etc.: Energy Northwest
   (c) Type Code Symbol Stamp: Not Applicable
   (d) Certificate Of Authorization No.: Not Applicable
   (e) Expiration Date: Not Applicable
4. **Identification Of System:** Main Steam (MS) System
5. **(a) Applicable Construction Code:** ASME Section III, Code Class 2, 1971 Edition with Winter 1973 Addenda, Code Case: None
   (b) Applicable Edition Of ASME Section XI Utilized For Repairs Or Replacements: 1989 Edition with no Addenda, Code Case: None
6. **Identification Of Components Repaired Or Replaced And Replacement Components**

Name Of Component	Name Of Manufacturer	Manufacturer's Serial No	National Board No	Other I.D.	Year Built	Repaired, Replaced Or Replacement	ASME Code Stamped (Yes Or No) Code Class
MS(1)-4D	WPPSS*	MS(1)-4D-P1	N/A	N/A	1983	----------	Yes, Code Class 2
MD-1285-14C	Pacific Scientific	28432	N/A	PSA-1/4	1982	Replaced	Yes, Code Class 1
MD-1285-14C	Pacific Scientific	27688	N/A	PSA-1/4	1982	Replacement	Yes, Code Class 1

7. **Description Of Work Performed:** Replaced existing snubber for support. The replacement work was performed as follows:
   1) Removed existing snubber.
   2) Installed pretested replacement snubber.
   3) Torqued the fasteners to the required torque value.
   4) Performed visual examination on the installed replacement snubber. Visual examination results acceptable.

NOTES -

1) * Company name changed from Washington Public Power Supply System (WPPSS) to Energy Northwest in 1999.
2) ASME Section III, Code Class NF(1) snubber.
3) The replacement snubber is certified to comply with ASME Section III, Code Class NF(1), 1977 Edition with Winter 1978 Addenda requirements and ASME Code Case No 1644-7.
4) The existing ASME Code Stamped piping system in which the replacement snubber was installed is Main Steam (MS) piping system MS(1)-4D-P1. This piping system is certified to comply with ASME Section III, Code Class 2, 1971 Edition with Winter 1973 Addenda requirements.

WOT No 01067751 01

ENERGY NORTHWEST
People·Vision·Solutions

FORM NIS-2 OWNER'S REPORT FOR REPAIRS OR REPLACEMENTS (Back)

8 Tests Conducted: Hydrostatic [ ] Pneumatic [ ] Nominal Operating Pressure [ ] None [X]
Test Pressure: Psig Test Temperature: °F
Component Design Pressure: Psig Temperature: °F

9. Remarks (Applicable Manufacturer's Data Reports to be attached): See attached NF-1 Code Data Reports for the replacement snubber, Serial No 27688.

CERTIFICATE OF COMPLIANCE

We certify that the statements made in this Owner's Report are correct and this replacement conforms to the rules of the ASME Code, Section XI.
Type Code Symbol Stamp: Not Applicable
Certificate Of Authorization No.: Not Applicable
Expiration Date: Not Applicable

Prepared By Kuldip Singh - Program Lead Engineer (PLE) Signed By Kuldip Singh - Program Lead Engineer (PLE)

Date 7/19/05 Date 7/19/05

CERTIFICATE OF INSERVICE INSPECTION

I, the undersigned, holding a valid commission issued by the National Board of Boiler and Pressure Vessel Inspectors and the State of Washington and employed by Hartford Steam Boiler Of Connecticut of Hartford, Connecticut have inspected the components described in this Owner's Report during the period 5-09-2005 to 8-02-2005 and state to the best of my knowledge and belief, the Owner has performed examinations and taken corrective measures described in this Owner's Report in accordance with the requirements of the ASME Code, Section XI.
By signing this certificate neither the inspector nor his employer makes any warranty, expressed or implied, concerning the examinations and corrective measures described in this Owner's Report. Furthermore, neither the inspector nor his employer shall be liable in any manner for any personal injury or property damage or a loss of any kind arising from or connected with this inspection.

Inspector's Signature Commissions 10655W A, B, N, I
National Board, State, and Endorsements

Date 8-02-2005

WO1 No. 01067951 01

FORM NF-1 NPT CERTIFICATE HOLDERS' DATA REPORT FOR COMPONENT SUPPORTS*

As Required by the Provisions of the ASME Code Rules, Section III, Division 1 E-WZ-498 #1/4

~~Nat'l Tech Division~~

1. Manufactured by Pacific Scientific 1346 S. State College Blvd. Anaheim, Ca. 92803
(Name and address of NPT Certificate Holder)

2. Manufacturer for ITT Grinnell Corporation 621 Dana Street N.E. Warren, Ohio 44481
(Name and address of purchaser or owner)

3. Location of Installation Unknown

4. Identification

	(a) Component Support I.D. No.	(b) Canadian Registration No.	(c) Applicable Drawings with Last Rev. & Date	(d) Stress Report or Load Capacity Data Sheet	(e) Type of Component Support	(f) Class	(g) Nat'l Board No.	(h) Year Built
(1)	27670	None	1801104-05-J	DR 1412 Rev.0	Linear	1	None	1982
(2)	thru							
(3)	27814							
(4)			MD-1285-14C, S/N 77688					
(5)								
(6)								
(7)				Philip Guy				
(8)								
(9)					7/18/05.			
(10)								

5. Remarks: Inspection Test Reports, CMTR's and Certificate of Conformance reviewed and meet ASME Sec III 1974 Edition, Summer '76 Addenda and Code Case 1644-6.

CERTIFICATE OF COMPLIANCE

We certify that the statements made in this report are correct and that these components supports conform to the rules of construction of the ASME Code for Nuclear Power Plant Components, Section III, Division 1, Edition 1977, Addenda Winter '78 (Date)
Code Case No. 1644-7

Date 7-29-82 Signed Pacific Scientific (NPT Certificate Holder) by Ronald A. Martin

Our ASME Certificate of Authorization No. 1198 to use the "NPT" (NPT)

Symbol expires Aug. 4, 1984 (Date)

CERTIFICATION OF DESIGN

Design Information on File at Pacific Scientific

Stress Report or Load Capacity Data Sheets on File at:
Pacific Scientific
Filed Per NCA 3256

Design Specifications Certified by (1) Leo E. Ay PE State California

Reg. No. 13533

Stress Analysis Report or Load Capacity Data Sheets Certified by (1) Leo E. Ay

State California Reg. No. 13533

(1) List name only, signature not required.

GRINNELL QUALITY ASSURANCE
AUG. 11 1982

REVIEWED BY
EBASCO ENGINEERING
REVIEW VERIFIED BY
HACO VEA INC.

SIGNED BY

* Supplemental sheets in form of lists, sketches or drawings may be used provided (1) size is 8½ x 11, (2) information in items 1, 2, 4c, 4g on this Data Report is included on each sheet, and (3) each sheet is numbered and number of sheets is recorded at top of

FORM NF-1 (Back)

CERTIFICATE OF SHOP INSPECTION

I, the undersigned, holding a valid commission issued by the National Board of Boiler and Pressure Vessel Inspectors and the State or Province of OHIO and employed by HSBI&I Co. of Hartford, CT have inspected the component supports described in this Data Report on JUL 30 1982, 19 __ and state that to the best of my knowledge and belief the NPT Certificate Holder has constructed these component supports in accordance with the ASME Code for Nuclear Power Plant Components.

By signing this certificate, neither the Inspector nor his employer makes any warranty, expressed or implied, concerning the component supports described in this Data Report. Furthermore, neither the Inspector nor his employer shall be liable in any manner for any personal injury or property damage or a loss of any kind arising from or connected with this inspection.

Date JUL 30 1982

Signed [signature] Commissions CA-1513/OHIO COMMISSION
(Nat'l Bd., State, Prov., and No.)

CERTIFICATION OF FIELD INSPECTION

I, the undersigned, holding a valid commission issued by the National Board of Boiler and Pressure Vessel Inspectors and the State or Province of _____ and employed by _____ of _____ have compared the statements in this Data Report with the described component supports and state that the parts referred to as data items _____ not included in the certificate of shop inspection have been inspected by me and that to the best of my knowledge and belief the NPT Certificate Holder has constructed these component supports in accordance with the ASME Code for Nuclear Power Plant Components.

By signing this certificate neither the Inspector nor his employer makes any warranty, expressed or implied, concerning the component supports described in this Data Report. Furthermore, neither the Inspector nor his employer shall be liable in any manner for any personal injury or property damage or a loss of any kind arising from or connected with this inspection.

Date _____

Signed _____ Commissions _____
(Nat'l Bd., State, Prov., and No.)

WOT No 01067751 01

ENERGY NORTHWEST
People·Vision·Solutions

FORM NIS-2 OWNER'S REPORT FOR REPAIRS OR REPLACEMENTS
As Required By The Provisions Of The ASME Code Section XI

1. Owner: Energy Northwest
Address: Columbia Generating Station, North Power Plant Loop, Richland, Washington, 99352
2. Plant: Columbia Generating Station
Address: Columbia Generating Station, North Power Plant Loop, Richland, Washington, 99352

Date: 07/18/05
Sheet: 1 Of 1
Unit: Not Applicable

3. (a) Work Performed By: Energy Northwest
(b) Repair Organization P.O. No, Job No, etc.: Energy Northwest
(c) Type Code Symbol Stamp: Not Applicable
(d) Certificate Of Authorization No.: Not Applicable
(e) Expiration Date: Not Applicable
4. Identification Of System: Main Steam (MS) System
5. (a) Applicable Construction Code: ASME Section III, Code Class 2, 1971 Edition with Winter 1973 Addenda, Code Case: None
(b) Applicable Edition Of ASME Section XI Utilized For Repairs Or Replacements: 1989 Edition with no Addenda, Code Case: None
6. Identification Of Components Repaired Or Replaced And Replacement Components

Name Of Component	Name Of Manufacturer	Manufacturer's Serial No	National Board No	Other I.D.	Year Built	Repaired, Replaced Or Replacement	ASME Code Stamped (Yes Or No) Code Class
MS(1)-4A	WPPSS*	MS(1)-4A-P1	N/A	N/A	1983	----------	Yes, Code Class 2
MD-1285-14A	Pacific Scientific	2473	N/A	PSA-1/2	1978	Replaced	Yes, Code Class 1
MD-1285-14A	Pacific Scientific	17474	N/A	PSA-1/2	1983	Replacement	Yes, Code Class 1

7. Description Of Work Performed: Replaced existing snubber for support. The replacement work was performed as follows:
1) Removed existing snubber.
2) Installed pretested replacement snubber.
3) Torqued the fasteners to the required torque value.
4) Performed visual examination on the installed replacement snubber. Visual examination results acceptable.

NOTES -
1) * Company name changed from Washington Public Power Supply System (WPPSS) to Energy Northwest in 1999.
2) ASME Section III, Code Class NF(1) snubber.
3) The replacement snubber is certified to comply with ASME Section III, Code Class NF(1), 1977 Edition with Winter 1978 Addenda requirements and ASME Code Case No 1644-6 and 1644-7.
4) The existing ASME Code Stamped piping system in which the replacement snubber was installed is Main Steam (MS) piping system MS(1)-4A-P1. This piping system is certified to comply with ASME Section III, Code Class 2, 1971 Edition with Winter 1973 Addenda requirements.

WOT No 01067751 01

ENERGY NORTHWEST
People·Vision·Solutions

FORM NIS-2 OWNER'S REPORT FOR REPAIRS OR REPLACEMENTS (Back)

8 Tests Conducted: Hydrostatic [ ] Pneumatic [ ] Nominal Operating Pressure [ ] None [X]
Test Pressure: Psig — Test Temperature: °F
Component Design Pressure: Psig — Temperature: °F

9. Remarks (Applicable Manufacturer's Data Reports to be attached): See attached NF-1 Code Data Reports for the replacement snubber, Serial No 17474.

CERTIFICATE OF COMPLIANCE

We certify that the statements made in this Owner's Report are correct and this replacement conforms to the rules of the ASME Code, Section XI.
Type Code Symbol Stamp: Not Applicable
Certificate Of Authorization No.: Not Applicable
Expiration Date: Not Applicable

Prepared By Kuldip Singh - Program Lead Engineer (PLE) — Signed By Kuldip Singh - Program Lead Engineer (PLE)
Date 7/19/05 — Date 7/19/05

CERTIFICATE OF INSERVICE INSPECTION

I, the undersigned, holding a valid commission issued by the National Board of Boiler and Pressure Vessel Inspectors and the State of Washington and employed by Hartford Steam Boiler Of Connecticut of Hartford, Connecticut have inspected the components described in this Owner's Report during the period 5-08-2005 to 8-02-2005 and state to the best of my knowledge and belief, the Owner has performed examinations and taken corrective measures described in this Owner's Report in accordance with the requirements of the ASME Code, Section XI.
By signing this certificate neither the inspector nor his employer makes any warranty, expressed or implied, concerning the examinations and corrective measures described in this Owner's Report. Furthermore, neither the inspector nor his employer shall be liable in any manner for any personal injury or property damage or a loss of any kind arising from or connected with this inspection.

Inspector's Signature — Commissions 10655W A, B, N, I
National Board, State, and Endorsements

Date 8-02-2005

WO# No. 00067751.01

#1/2

FORM NF-1 NPT CERTIFICATE HOLDERS' DATA REPORT FOR COMPONENT SUPPORTS*

As Required by the Provisions of the ASME Code Rules, Section III, Division 1

1. Manufactured by Kin-Tech Division Pacific Scientific 1346 S. STate College Blvd. Anaheim, Ca. 92803
(Name and address of NPT Certificate Holder)

2. Manufacturer for ITT Grinnell Corporation 621 DanaSTreet N.E. Warren, Ohio 44481
(Name and address of purchaser or owner)

3. Location of Installation Unknown E-WZ-733

4. Identification

	(a) Component Support I.D. No.	(b) Canadian Registration No.	(c) Applicable Drawings with Last Rev. & Date	(d) Stress Report or Load Capacity Data Sheet	(e) Type of Component Support	(f) Class	(g) Nat'l Board No.	(h) Year Built
(1)	17388	None	1801104-07-J	DR1413 Rev. 0	Linear	1	None	1983
(2)	thru							
(3)	17517		"	"	"	"	"	"
(4)								
(5)	MD-1285-14A, S/N 17474							
(6)								
(7)								
(8)								
(9)								
(10)								

5. Remarks: Inspection Test Reports, CMTR's and Certificate of Conformance reviewed and meet ASME SEC III 1974 Edition, Summer '76 Addenda and Code case 1644-6.

CERTIFICATE OF COMPLIANCE

We certify that the statements made in this report are correct and that these components supports conform to the rules of construction of the ASME Code for Nuclear Power Plant Components, Section III, Division 1, Edition 1977, Addenda Winter '78 (Date). Code Case No. 1644-7

Date 2-4-83 Signed Pacific Scientific (NPT Certificate Holder) by Renalie A. Nava

Our ASME Certificate of Authorization No. 1198 to use the "NPT" (NPT) Symbol expires Aug. 4, 1984 (Date).

CERTIFICATION OF DESIGN

Design Information on File at Pacific Scientific

Stress Report or Load Capacity Data Sheets on File at: Pacific Scientific

Filed Per NCA 3256

Design Specifications Certified by (1) Leo E. Ay PE State California

Reg. No. 13533.

Stress Analysis Report or Load Capacity Data Sheets Certified by (1) Leo E. Ay

PE State California Reg. No. 13533.

(1) List name only, signature not required.

ITT GRINNELL CORP.
Warren Quality Assurance
FEB 22 1983
REVIEWED BY

*Supplemental sheets in form of lists, sketches or drawings may be used provided (1) size is 8½ in., (2) information in items 1, 2, 4c, 4g on this Data Report is included on each sheet, and (3) each sheet is numbered and number of sheets is recorded at top of this form.

FORM NF-1 (Back)

CERTIFICATE OF SHOP INSPECTION

I, the undersigned, holding a valid commission issued by the National Board of Boiler and Pressure Vessel Inspectors and the State or Province of OHIO and employed by HSBI&I Co. of Hartford, CT have inspected the component supports described in this Data Report on FEB. 04 1983, and state that to the best of my knowledge and belief the NPT Certificate Holder has constructed these component supports in accordance with the ASME Code for Nuclear Power Plant Components.

By signing this certificate, neither the Inspector nor his employer makes any warranty, expressed or implied, concerning the component supports described in this Data Report. Furthermore, neither the Inspector nor his employer shall be liable in any manner for any personal injury or property damage or a loss of any kind arising from or connected with this inspection.

Date FEB. 04 1983.

Signed [signature] Commissions CA-1513/Ohio Commission
(Nat'l Bd., State, Prov., and No.)

CERTIFICATION OF FIELD INSPECTION

I, the undersigned, holding a valid commission issued by the National Board of Boiler and Pressure Vessel Inspectors and the State or Province of _____ and employed by _____ of _____ have compared the statements in this Data Report with the described component supports and state that the parts referred to as data items _____, not included in the certificate of shop inspection, have been inspected by me and that to the best of my knowledge and belief the NPT Certificate Holder has constructed these component supports in accordance with the ASME Code for Nuclear Power Plant Components.

By signing this certificate neither the Inspector nor his employer makes any warranty, expressed or implied, concerning the component supports described in this Data Report. Furthermore, neither the Inspector nor his employer shall be liable in any manner for any personal injury or property damage or a loss of any kind arising from or connected with this inspection.

Date _____.

Signed _____ Commissions _____
(Nat'l Bd., State, Prov., and No.)

WOT No 01067751 01

ENERGY NORTHWEST
People·Vision·Solutions

FORM NIS-2 OWNER'S REPORT FOR REPAIRS OR REPLACEMENTS
As Required By The Provisions Of The ASME Code Section XI

Date: 08/02/05
Sheet: 1 Of 1
Unit: Not Applicable

1. **Owner:** Energy Northwest
   Address: Columbia Generating Station, North Power Plant Loop, Richland, Washington, 99352
2. **Plant:** Columbia Generating Station
   Address: Columbia Generating Station, North Power Plant Loop, Richland, Washington, 99352
3. **(a) Work Performed By:** Energy Northwest
   (b) Repair Organization P.O. No, Job No, etc.: Energy Northwest
   (c) Type Code Symbol Stamp: Not Applicable
   (d) Certificate Of Authorization No.: Not Applicable
   (e) Expiration Date: Not Applicable
4. **Identification Of System:** Main Steam (MS) System
5. **(a) Applicable Construction Code:** ASME Section III, Code Class 2, 1971 Edition with Winter 1973 Addenda, Code Case: None
   (b) Applicable Edition Of ASME Section XI Utilized For Repairs Or Replacements: 1989 Edition with no Addenda, Code Case: None
6. **Identification Of Components Repaired Or Replaced And Replacement Components**

Name Of Component	Name Of Manufacturer	Manufacturer's Serial No	National Board No	Other I.D.	Year Built	Repaired, Replaced Or Replacement	ASME Code Stamped (Yes Or No) Code Class
MS(1)-4A	WPPSS*	MS(1)-4A-P1	N/A	N/A	1983	----------	Yes, Code Class 2
MS-96(T)	Pacific Scientific	685	N/A	PSA-10	1977	Replaced	Yes, Code Class 1
MS-96(T)	Pacific Scientific	8847	N/A	PSA-10	1981	Replacement	Yes, Code Class 1

7. **Description Of Work Performed:** Replaced existing snubber for support. The replacement work was performed as follows:
   1) Removed existing snubber.
   2) Installed pretested replacement snubber.
   3) Torqued the fasteners to the required torque value.
   4) Performed visual examination on the installed replacement snubber. Visual examination results acceptable.

NOTES -

1) * Company name changed from Washington Public Power Supply System (WPPSS) to Energy Northwest in 1999.
2) ASME Section III, Code Class NF(1) snubber.
3) The replacement snubber is certified to comply with ASME Section III, Code Class NF(1), 1977 Edition with Winter 1977 Addenda requirements and ASME Code Case No 1644-7.
4) The existing ASME Code Stamped piping system in which the replacement snubber was installed is Main Steam (MS) piping system MS(1)-4A-P1. This piping system is certified to comply with ASME Section III, Code Class 2, 1971 Edition with Winter 1973 Addenda requirements.

WOT No 01067751 01

ENERGY NORTHWEST
People·Vision·Solutions

FORM NIS-2 OWNER'S REPORT FOR REPAIRS OR REPLACEMENTS (Back)

8 Tests Conducted: Hydrostatic [ ] *Pneumatic* [ ] *Nominal Operating Pressure* [ ] *None* [X]
Test Pressure: Psig *Test Temperature:* °F
Component Design Pressure: Psig *Temperature:* °F

9. Remarks (Applicable Manufacturer's Data Reports to be attached): See attached NF-1 Code Data Reports for the replacement snubber, Serial No 8847.

CERTIFICATE OF COMPLIANCE

We certify that the statements made in this Owner's Report are correct and this replacement *conforms to the rules of the ASME Code, Section XI.*
Type Code Symbol Stamp: Not Applicable
Certificate Of Authorization No.: Not Applicable
Expiration Date: Not Applicable

Prepared By Kuldip Singh - Program Lead Engineer (PLE) *Signed By* Kuldip Singh - Program Lead Engineer (PLE)

Date 8/2/05 *Date* 8/2/05

CERTIFICATE OF INSERVICE INSPECTION

I, the undersigned, holding a valid commission issued by the National Board of Boiler and Pressure Vessel Inspectors and the State of Washington *and employed by* Hartford Steam Boiler Of Connecticut of Hartford, Connecticut *have inspected the components described in this Owner's Report during the period* 5-09-2005 *to* 8-02-2005 *and state to the best of my knowledge and belief, the Owner has performed examinations and taken corrective measures described in this Owner's Report in accordance with the requirements of the ASME Code, Section XI.*
By signing this certificate neither the Inspector nor his employer makes any warranty, expressed or implied, concerning the examinations and corrective measures described in this Owner's Report. Furthermore, neither the Inspector nor his employer shall be liable in any manner for any personal injury or property damage or a loss of any kind arising from or connected with this inspection.

Inspector's Signature *Commissions* 10655 W A, B, H, T
National Board, State, and Endorsements

Date 8-02-2005

WO7 NO. 0104-1151 01

FORM NF-1 NPT CERTIFICATE HOLDERS' DATA REPORT FOR COMPONENT SUPPORTS*

As Required by the Provisions of the ASME Code Rules, Section III, Division 1 #10

1. Manufactured by Pacific Scientific 1346 S. State College Blvd. Anaheim, Ca. 92803 EWZ-274
(Name and address of NPT Certificate Holder)

2. Manufacturer for ITT Grinnell Corporation 621 Dana Street N.E. Warren, Ohio 44481
(Name and address of purchaser or owner)

3. Location of Installation Unknown

4. Identification

	(a) Component Support I.D. No.	(b) Canadian Registration No.	(c) Applicable Drawings with Last Rev. & Date	(d) Stress Report or Load Capacity Data Sheet	(e) Type of Component Support	(f) Class	(g) Nat'l Board No.	(h) Year Built
(1)	8761-8860	None	1801103-07-H	DR-1352-Rev. B	Linear	1	None	1981
(2)								
(3)								
(4)								
(5)	MS-96(T), SIN 8847							
(6)								
(7)								
(8)				Certify Sign				
(9)				7/18/05.				
(10)								

5. Remarks:

CERTIFICATE OF COMPLIANCE

We certify that the statements made in this report are correct and that these components supports conform to the rules of construction of the ASME Code for Nuclear Power Plant Components, Section III, Division 1, Edition 1977, Addenda Winter '77 (Date).
Code Case No. 1644-7

Date 3/20/81 Signed Pacific Scientific (NPT Certificate Holder) by [signature]

Our ASME Certificate of Authorization No. 1198 to use the Component Supports (NPT)

Symbol expires Aug. 4, 1981 (Date).

CERTIFICATION OF DESIGN

Design Information on File at Pacific Scientific

Stress Report or Load Capacity Data Sheets on File at:
Pacific Scientific
Filed Per NA 3256

Design Specifications Certified by (1) Leo E. Ay PE State California

Reg. No. 13533.

Stress Analysis Report or Load Capacity Data Sheets Certified by (1) Leo E. Ay

State California Reg. No. 13533.

(1) name only, signature not required.

Oct 8-1982

*Supplemental sheets in form of lists, sketches or drawings may be used provided (1) size is 8½ in., (2) information in items 1, 2, 4c, 4g on this Data Report is included on each sheet, and (3) each sheet is numbered and number of sheets is recorded at top of this form.

CERTIFICATE OF SHOP INSPECTION

I, the undersigned, holding a valid commission issued by the National Board of Boiler and Pressure Vessel Inspectors and the State or Province of California and employed by HSBI&I Co. of Hartford, CT have inspected the component supports described in this Data Report on 3/20, 1981 and state that to the best of my knowledge and belief the NPT Certificate Holder has constructed these component supports in accordance with the ASME Code for Nuclear Power Plant Components.

By signing this certificate, neither the Inspector nor his employer makes any warranty, expressed or implied, concerning the component supports described in this Data Report. Furthermore, neither the Inspector nor his employer shall be liable in any manner for any personal injury or property damage or a loss of any kind arising from or connected with this inspection.

Date 3/20/81.

Signed William Meyer Commissions Ca #1494
(Nat'l Bd., State, Prov., and No.)

CERTIFICATION OF FIELD INSPECTION

I, the undersigned, holding a valid commission issued by the National Board of Boiler and Pressure Vessel Inspectors and the State or Province of _____ and employed by _____ of _____ have compared the statements in this Data Report with the described component supports and state that the parts referred to as data items _____, not included in the certificate of shop inspection, have been inspected by me and that to the best of my knowledge and belief the NPT Certificate Holder has constructed these component supports in accordance with the ASME Code for Nuclear Power Plant Components.

By signing this certificate neither the Inspector nor his employer makes any warranty, expressed or implied, concerning the component supports described in this Data Report. Furthermore, neither the Inspector nor his employer shall be liable in any manner for any personal injury or property damage or a loss of any kind arising from or connected with this inspection.

Date _____.

Signed _____ Commissions _____
(Nat'l Bd., State, Prov., and No.)

WOT No 01067751 01

ENERGY NORTHWEST
People·Vision·Solutions

FORM NIS-2 OWNER'S REPORT FOR REPAIRS OR REPLACEMENTS
As Required By The Provisions Of The ASME Code Section XI

1. Owner: Energy Northwest
Address: Columbia Generating Station, North Power Plant Loop, Richland, Washington, 99352
2. Plant: Columbia Generating Station
Address: Columbia Generating Station, North Power Plant Loop, Richland, Washington, 99352

Date: 07/18/05
Sheet: 1 Of 1
Unit: Not Applicable

3. (a) Work Performed By: Energy Northwest
(b) Repair Organization P.O. No, Job No, etc.: Energy Northwest
(c) Type Code Symbol Stamp: Not Applicable
(d) Certificate Of Authorization No.: Not Applicable
(e) Expiration Date: Not Applicable
4. Identification Of System: Main Steam (MS) System
5. (a) Applicable Construction Code: ASME Section III, Code Class 2, 1971 Edition with Winter 1973 Addenda, Code Case: None
(b) Applicable Edition Of ASME Section XI Utilized For Repairs Or Replacements: 1989 Edition with no Addenda, Code Case: None
6. Identification Of Components Repaired Or Replaced And Replacement Components

Name Of Component	Name Of Manufacturer	Manufacturer's Serial No	National Board No	Other I.D.	Year Built	Repaired, Replaced Or Replacement	ASME Code Stamped (Yes Or No) Code Class
MS(1)-4B	WPPSS*	MS(1)-4B-P1	N/A	N/A	1983	----------	Yes, Code Class 2
MS-151(B)	Pacific Scientific	202	N/A	PSA-3	1976	Replaced	Yes, Code Class 1
MS-151(B)	Pacific Scientific	10529	N/A	PSA-3	1980	Replacement	Yes, Code Class 1

7. Description Of Work Performed: Replaced existing snubber for support. The replacement work was performed as follows:
1) Removed existing snubber.
2) Installed pretested replacement snubber.
3) Torqued the fasteners to the required torque value.
4) Performed visual examination on the installed replacement snubber. Visual examination results acceptable.

NOTES -
1) * Company name changed from Washington Public Power Supply System (WPPSS) to Energy Northwest in 1999.
2) ASME Section III, Code Class NF(1) snubber.
3) The replacement snubber is certified to comply with ASME Section III, Code Class NF(1), 1974 Edition with Winter 1976 Addenda requirements and ASME Code Case No 1644-5.
4) The existing ASME Code Stamped piping system in which the replacement snubber was installed is Main Steam (MS) piping system MS(1)-4B-P1. This piping system is certified to comply with ASME Section III, Code Class 2, 1971 Edition with Winter 1973 Addenda requirements.

WOT No 01067751 01

ENERGY NORTHWEST
People·Vision·Solutions

FORM NIS-2 OWNER'S REPORT FOR REPAIRS OR REPLACEMENTS (Back)

8 Tests Conducted: Hydrostatic [ ] Pneumatic [ ] Nominal Operating Pressure [ ] None [X]
Test Pressure: Psig Test Temperature: °F
Component Design Pressure: Psig Temperature: °F

9. Remarks (Applicable Manufacturer's Data Reports to be attached): See attached NF-1 Code Data Reports for the replacement snubber, Serial No 10529.

CERTIFICATE OF COMPLIANCE

We certify that the statements made in this Owner's Report are correct and this replacement conforms to the rules of the ASME Code, Section XI.
Type Code Symbol Stamp: Not Applicable
Certificate Of Authorization No.: Not Applicable
Expiration Date: Not Applicable

Prepared By Kuldip Singh - Program Lead Engineer (PLE) Signed By Kuldip Singh - Program Lead Engineer (PLE)

Date 7/19/05 Date 7/19/05.

CERTIFICATE OF INSERVICE INSPECTION

I, the undersigned, holding a valid commission issued by the National Board of Boiler and Pressure Vessel Inspectors and the State of Washington and employed by Hartford Steam Boiler Of Connecticut of Hartford, Connecticut have inspected the components described in this Owner's Report during the period 5-09-2005 to 8-02-2005 and state to the best of my knowledge and belief, the Owner has performed examinations and taken corrective measures described in this Owner's Report in accordance with the requirements of the ASME Code, Section XI.
By signing this certificate neither the Inspector nor his employer makes any warranty, expressed or implied, concerning the examinations and corrective measures described in this Owner's Report. Furthermore, neither the Inspector nor his employer shall be liable in any manner for any personal injury or property damage or a loss of any kind arising from or connected with this inspection.

Inspector's Signature Commissions 10655W A, B, N, I
National Board, State, and Endorsements

Date 8-02-2005

WO1 No. 01067751 01

#3

FORM NF-1 NPT CERTIFICATE HOLDER'S DATA REPORT FOR COMPONENT SUPPORTS*

As Required by the Provisions of the ASME Code Rules, Section III, Division 1 E-WZ-796

1. Manufactured by Pacific Scientific 1346 S. State College Blvd. Anaheim, Ca. 92803
(Name and address of NPT Certificate Holder)

2. Manufacturer for ITT Grinnell Corp. 621 Dana Street N.E. Warren, Ohio 44481
(Name and address of purchaser or owner)

3. Location of Installation Unknown

4. Identification

	(a) Component Support I.D. No.	(b) Canadian Registration No.	(c) Applicable Drawings with Last Rev. & Date	(d) Stress Report or Load Capacity Data Sheet	(e) Type of Component Support	(f) Class	(g) Nat'l Board No.	(h) Year Built
(1)	10511-10628	None	1801106-05-H	DR-1350-Rev. B	Linear	I	None	1980
(2)								
(3)								
(4)								
(5)	MS-151(B), S/N 10529							
(6)								
(7)								
(8)								
(9)								
(10)								

5. Remarks:

CERTIFICATE OF COMPLIANCE

We certify that the statements made in this report are correct and that these components supports conform to the rules of construction of the ASME Code for Nuclear Power Plant Components, Section III, Division 1, Edition '74, Addenda Winter '76 (Date), Code Case No. 1644-5

Date 25 January 1980 Signed Pacific Scientific (NPT Certificate Holder) by Bill Jenkins

Our ASME Certificate of Authorization No. 1198 to use the Component Supports (NPT)

Symbol expires Aug. 4, 1981 (Date).

CERTIFICATION OF DESIGN

Design Information on File at Pacific Scientific

Stress Report or Load Capacity Data Sheets on File at:
Pacific Scientific
Filed Per NA 3256

Design Specifications Certified by (1) Leo e. Ay PE State California

Reg. No. 13533.

Stress Analysis Report or Load Capacity Data Sheets Certified by (1) Leo E. Ay

PE State California Reg. No. 13533.

(1) List name only, signature not required.

*Supplemental sheets in form of lists, sketches or drawings may be used provided (1) size is 8½ in., (2) information in items 1, 2, 4c, 4g on this Data Report is included on each sheet, and (3) each sheet is numbered and number of sheets is recorded at top of this form.

FORM NF-1 (Back)

CERTIFICATE OF SHOP INSPECTION

I, the undersigned, holding a valid commission issued by the National Board of Boiler and Pressure Vessel Inspectors and the State or Province of New York and employed by HSBI&I Co. of Hartford, CT have inspected the component supports described in this Data Report on 1/25, 19 80 and state that to the best of my knowledge and belief the NPT Certificate Holder has constructed these component supports in accordance with the ASME Code for Nuclear Power Plant Components.

By signing this certificate, neither the Inspector nor his employer makes any warranty, expressed or implied, concerning the component supports described in this Data Report. Furthermore, neither the Inspector nor his employer shall be liable in any manner for any personal injury or property damage or a loss of any kind arising from or connected with this inspection.

Date 1/25/80.

Signed William Meyer Commissions N.Y. Comm #2770/Ohio Comm
(Nat'l Bd., State, Prov., and No.)

CERTIFICATION OF FIELD INSPECTION

I, the undersigned, holding a valid commission issued by the National Board of Boiler and Pressure Vessel Inspectors and the State or Province of _____ and employed by _____ of _____ have compared the statements in this Data Report with the described component supports and state that the parts referred to as data items _____, not included in the certificate of shop inspection, have been inspected by me and that to the best of my knowledge and belief the NPT Certificate Holder has constructed these component supports in accordance with the ASME Code for Nuclear Power Plant Components.

By signing this certificate neither the Inspector nor his employer makes any warranty, expressed or implied, concerning the component supports described in this Data Report. Furthermore, neither the Inspector nor his employer shall be liable in any manner for any personal injury or property damage or a loss of any kind arising from or connected with this inspection.

Date _____.

Signed _____ Commissions _____
(Nat'l Bd., State, Prov., and No.)

WOT No 01067751 01

ENERGY NORTHWEST
People·Vision·Solutions

FORM NIS-2 OWNER'S REPORT FOR REPAIRS OR REPLACEMENTS
As Required By The Provisions Of The ASME Code Section XI

1. Owner: Energy Northwest
Address: Columbia Generating Station, North Power Plant Loop, Richland, Washington, 99352
2. Plant: Columbia Generating Station
Address: Columbia Generating Station, North Power Plant Loop, Richland, Washington, 99352

Date: 07/18/05
Sheet: 1 Of 1
Unit: Not Applicable

3. (a) Work Performed By: Energy Northwest
(b) Repair Organization P.O. No, Job No, etc.: Energy Northwest
(c) Type Code Symbol Stamp: Not Applicable
(d) Certificate Of Authorization No.: Not Applicable
(e) Expiration Date: Not Applicable
4. Identification Of System: Reactor Recirculation (RRC) System
5. (a) Applicable Construction Code: ASME Section III, Code Class 1, 1971 Edition with Winter 1973 Addenda, Code Case: None
(b) Applicable Edition Of ASME Section XI Utilized For Repairs Or Replacements: 1989 Edition with no Addenda, Code Case: None
6. Identification Of Components Repaired Or Replaced And Replacement Components

Name Of Component	Name Of Manufacturer	Manufacturer's Serial No	National Board No	Other I.D.	Year Built	Repaired, Replaced Or Replacement	ASME Code Stamped (Yes Or No) Code Class
RRC(51)-4	WPPSS*	RRC(51)-4-P1	N/A	N/A	1983	----------	Yes, Code Class 1
RHR-SA-51	Pacific Scientific	6162	N/A	PSA-35	1980	Replaced	Yes, Code Class 1
RHR-SA-51	Pacific Scientific	5363	N/A	PSA-35	1980	Replacement	Yes, Code Class 1

7. Description Of Work Performed: Replaced existing snubber for support. The replacement work was performed as follows:
1) Removed existing snubber.
2) Installed pretested replacement snubber.
3) Torqued the fasteners to the required torque value.
4) Performed visual examination on the installed replacement snubber. Visual examination results acceptable.

NOTES -
1) * Company name changed from Washington Public Power Supply System (WPPSS) to Energy Northwest in 1999.
2) ASME Section III, Code Class NF(1) snubber.
3) The replacement snubber is certified to comply with ASME Section III, Code Class NF(1), 1977 Edition with Winter 1977 Addenda requirements and ASME Code Case No 1644-7.
4) The existing ASME Code Stamped piping system in which the replacement snubber was installed is Main Steam (MS) piping system RRC(51)-4-P1. This piping system is certified to comply with ASME Section III, Code Class 1, 1971 Edition with Winter 1973 Addenda requirements.

WOT No 01067751 01

ENERGY NORTHWEST
People·Vision·Solutions

FORM NIS-2 OWNER'S REPORT FOR REPAIRS OR REPLACEMENTS (Back)

8 Tests Conducted: Hydrostatic [ ] Pneumatic [ ] Nominal Operating Pressure [ ] None [X]
Test Pressure: Psig Test Temperature: °F
Component Design Pressure: Psig Temperature: °F

9. Remarks (Applicable Manufacturer's Data Reports to be attached): See attached NF-1 Code Data Reports for the replacement snubber, Serial No 5363.

CERTIFICATE OF COMPLIANCE

We certify that the statements made in this Owner's Report are correct and this replacement conforms to the rules of the ASME Code, Section XI.
Type Code Symbol Stamp: Not Applicable
Certificate Of Authorization No.: Not Applicable
Expiration Date: Not Applicable

Prepared By Kuldip Singh - Program Lead Engineer (PLE) Signed By Kuldip Singh - Program Lead Engineer (PLE)
Date 7/19/05 Date 7/19/05

CERTIFICATE OF INSERVICE INSPECTION

I, the undersigned, holding a valid commission issued by the National Board of Boiler and Pressure Vessel Inspectors and the State of Washington and employed by Hartford Steam Boiler Of Connecticut of Hartford, Connecticut have inspected the components described in this Owner's Report during the period 5-02-2005 to 8-02-2005 and state to the best of my knowledge and belief, the Owner has performed examinations and taken corrective measures described in this Owner's Report in accordance with the requirements of the ASME Code, Section XI.
By signing this certificate neither the Inspector nor his employer makes any warranty, expressed or implied, concerning the examinations and corrective measures described in this Owner's Report. Furthermore, neither the Inspector nor his employer shall be liable in any manner for any personal injury or property damage or a loss of any kind arising from or connected with this inspection.

Inspector's Signature Commissions 10655W A,B,N,I
National Board, State, and Endorsements

Date 8-02-2005

Lot No. 0106775101

FORM NF-1 NPT CERTIFICATE HOLDERS' DATA REPORT FOR COMPONENT SUPPORTS*

As Required by the Provisions of the ASME Code Rules, Section III, Division 1

#35

1. Manufactured by Pacific Scientific 1346 S. State College Blvd. Anaheim, Ca. 92803
(Name and address of NPT Certificate Holder)

2. Manufacturer for ITT Grinnell Corporation 621 Dana Street N.E. Warren, Ohio 44481
(Name and address of purchaser or owner)

3. Location of Installation Unknown E-WT-559

4. Identification

	(a) Component Support I.D. No.	(b) Canadian Registration No.	(c) Applicable Drawings with Last Rev. & Date	(d) Stress Report or Load Capacity Data Sheet	(e) Type of Component Support	(f) Class	(g) Nat'l Board No.	(h) Year Built
(1)	5358-5396	None	1801112-09-D	DR-1333-Rev. A	Linear	1	None	1980
(2)								
(3)								
(4)								
(5)	RHR-SA-51, S/N 5363							
(6)								
(7)								
(8)	Philip Engel							
(9)								
(10)	7/18/05							

5. Remarks:

CERTIFICATE OF COMPLIANCE

I certify that the statements made in this report are correct and that these components supports conform to the rules of construction of the ASME Code for Nuclear Power Plant Components, Section III, Division 1, Edition 1977, Addenda Winter '77 (Date), Code Case No. 1644-7

Date 2/15/80 Signed Pacific Scientific (NPT Certificate Holder) by D L Yager

Our ASME Certificate of Authorization No. 1198 to use the Component Supports (NPT)

Symbol expires Aug. 4, 1981 (Date)

CERTIFICATION OF DESIGN

Design Information on File at Pacific Scientific

Stress Report or Load Capacity Data Sheets on File at:
Pacific Scientific
Filed Per NA 3256

Design Specifications Certified by (1) Leo E. Ay PE State California

Reg. No. 13533

Stress Analysis Report or Load Capacity Data Sheets Certified by (1) Leo E. Ay

PE State California Reg. No. 13533

(1) List name only, signature not required.

REVIEWED BY
EBASCO ENGINEERING
REVIEW VERIFIED BY 12-11-82
EBASCO VQA

Supplemental sheets in form of lists, sketches or drawings may be used provided (1) size is 8½ in., (2) information in items 1, 2, 4c, 4g on this Data Report is included on each sheet, and (3) each sheet is numbered and number of sheets is recorded at top of this form.

(10/77) This form (E00075) may be obtained from the Order Dept., ASME, 345 E. 47th St., New York, N.Y. 10017

FORM NF-1 (Back)

CERTIFICATE OF SHOP INSPECTION

I, the undersigned, holding a valid commission issued by the National Board of Boiler and Pressure Vessel Inspectors and the State or Province of New York and employed by HSBI&I Co. of Hartford, CT have inspected the component supports described in this Data Report on 2/15, 19 80 and state that to the best of my knowledge and belief the NPT Certificate Holder has constructed these component supports in accordance with the ASME Code for Nuclear Power Plant Components.

By signing this certificate, neither the Inspector nor his employer makes any warranty, expressed or implied, concerning the component supports described in this Data Report. Furthermore, neither the Inspector nor his employer shall be liable in any manner for any personal injury or property damage or a loss of any kind arising from or connected with this inspection.

Date 2/15/80.

Signed William Mayer Commissions N.Y. Comm #2770
(Nat'l Bd., State, Prov., and No.)

CERTIFICATION OF FIELD INSPECTION

I, the undersigned, holding a valid commission issued by the National Board of Boiler and Pressure Vessel Inspectors and the State or Province of _____ and employed by _____ of _____ have compared the statements in this Data Report with the described component supports and state that the parts referred to as data items _____, not included in the certificate of shop inspection, have been inspected by me and that to the best of my knowledge and belief the NPT Certificate Holder has constructed these component supports in accordance with the ASME Code for Nuclear Power Plant Components.

By signing this certificate neither the Inspector nor his employer makes any warranty, expressed or implied, concerning the component supports described in this Data Report. Furthermore, neither the Inspector nor his employer shall be liable in any manner for any personal injury or property damage or a loss of any kind arising from or connected with this inspection.

Date _____.

Signed _____ Commissions _____
(Nat'l Bd., State, Prov., and No.)

WOT No 01062290 05

ENERGY NORTHWEST
People·Vision·Solutions

FORM NIS-2 OWNER'S REPORT FOR REPAIRS OR REPLACEMENTS
As Required By The Provisions Of The ASME Code Section XI

Date: 01/03/05
Sheet: 1 Of 1
Unit: Not Applicable

1. **Owner:** Energy Northwest
   Address: Columbia Generating Station, North Power Plant Loop, Richland, Washington, 99352
2. **Plant:** Columbia Generating Station
   Address: Columbia Generating Station, North Power Plant Loop, Richland, Washington, 99352
3. (a) **Work Performed By:** Energy Northwest
   (b) **Repair Organization P.O. No, Job No, etc.:** Energy Northwest
   (c) **Type Code Symbol Stamp:** Not Applicable
   (d) **Certificate Of Authorization No.:** Not Applicable
   (e) **Expiration Date:** Not Applicable
4. **Identification Of System:** Control Rod Drive (CRD)
5. (a) **Applicable Construction Code:** ASME Section III, Code Class 1 - See Notes For Code Edition, Addenda And Code Cases
   (b) **Applicable Edition Of ASME Section XI Utilized For Repairs Or Replacements:** 1989 Edition with no Addenda, Code Case: None
6. **Identification Of Components Repaired Or Replaced And Replacement Components**

Name Of Component	Name Of Manufacturer	Manufacturer's Serial No	National Board No	Other I.D.	Year Built	Repaired, Replaced Or Replacement	ASME Code Stamped (Yes Or No) Code Class
CRD	General Electric	A8591	N/A	N/A	1988	----------	Yes, Code Class 1

7. **Description Of Work Performed:** Overhauled Control Rod Drive (CRD) assembly Serial No A8591. The overhaul work was performed in accordance with plant procedure PPM No 10.5.4 "Control Rod Drive Overhaul" as follows:
   1) Disassembled Control Rod Drive (CRD) assembly for overhaul.
   2) Performed liquid penetrant (PT) examination on the existing Cylinder Tube And Flange (CT&F) assembly Serial No A8591. Liquid penetrant (PT) examination results acceptable.
   3) Performed VT-3 visual examination on the existing ring flange cap screws. VT-3 visual examination results acceptable.
   4) Performed VT-3 visual examination on the existing piston tube nut Serial No 3098. VT-3 visual examination results acceptable.
   5) Reinstalled existing Piston Tube (PT) assembly Serial No 5826.
   6) Reinstalled existing ring flange Serial No 2503.
   7) Reinstalled VT-3 visually examined existing piston tube nut Serial No 3098.
   8) Reinstalled VT-3 visually examined existing ring flange cap screws.

NOTES -

1) ASME Section III Code Cases are as listed on the N-2 Code Data Report for the Control Rod Drive (CRD) assembly Serial No A8591.
2) ASME pressure boundary (retaining) parts and materials such as Cylinder Tube And Flange (CT&F) assembly, Piston Tube (PT) assembly, ring flange, ring flange cap screws and piston tube nut were not replaced during CRD overhaul activities.
3) The Control Rod Drive (CRD) assembly Serial No A8591 is certified to comply with ASME Section III, Code Class 1, 1974 Edition with Winter 1975 Addenda.
4) The entire Control Rod Drive (CRD) assembly is identified by the Cylinder Tube And Flange (CT&F) Serial No A8591.

WOT No 01062290 05

ENERGY NORTHWEST
People·Vision·Solutions

FORM NIS-2 OWNER'S REPORT FOR REPAIRS OR REPLACEMENTS (Back)

8 Tests Conducted: Hydrostatic [ ] *Pneumatic* [ ] *Nominal Operating Pressure* [ ] *None* [X]

Test Pressure: Psig *Test Temperature:* °F

Component Design Pressure: Psig *Temperature:* °F

9. Remarks (Applicable Manufacturer's Data Reports to be attached): None

CERTIFICATE OF COMPLIANCE

We certify that the statements made in this Owner's Report are correct and this replacement *conforms to the rules of the ASME Code, Section XI.*

Type Code Symbol Stamp: Not Applicable

Certificate Of Authorization No.: Not Applicable

Expiration Date: Not Applicable

Prepared By Kuldip Singh - Program Lead Engineer (PLE) *Signed By* Kuldip Singh - Program Lead Engineer (PLE)

Date 1/7/05 *Date* 1/7/05

CERTIFICATE OF INSERVICE INSPECTION

I, the undersigned, holding a valid commission issued by the National Board of Boiler and Pressure Vessel Inspectors and the State of Washington *and employed by* Hartford Steam Boiler Of Connecticut of Hartford, Connecticut *have inspected the components described in this Owner's Report during the period* 7/21/2004 *to* 3/15/2005 *and state to the best of my knowledge and belief, the Owner has performed examinations and taken corrective measures described in this Owner's Report in accordance with the requirements of the ASME Code, Section XI.*

By signing this certificate neither the Inspector nor his employer makes any warranty, expressed or implied, concerning the examinations and corrective measures described in this Owner's Report. Furthermore, neither the Inspector nor his employer shall be liable in any manner for any personal injury or property damage or a loss of any kind arising from or connected with this inspection.

Inspector's Signature *Commissions* 10655W A,B,N,I
National Board, State, and Endorsements

Date 3/15/2005

WOT No 01062290 06

ENERGY NORTHWEST
People·Vision·Solutions

FORM NIS-2 OWNER'S REPORT FOR REPAIRS OR REPLACEMENTS
As Required By The Provisions Of The ASME Code Section XI

Date: 01/03/05
Sheet: 1 Of 1
Unit: Not Applicable

1. **Owner:** Energy Northwest
   Address: Columbia Generating Station, North Power Plant Loop, Richland, Washington, 99352
2. **Plant:** Columbia Generating Station
   Address: Columbia Generating Station, North Power Plant Loop, Richland, Washington, 99352
3. **(a) Work Performed By:** Energy Northwest
   (b) Repair Organization P.O. No, Job No, etc.: Energy Northwest
   (c) Type Code Symbol Stamp: Not Applicable
   (d) Certificate Of Authorization No.: Not Applicable
   (e) Expiration Date: Not Applicable
4. **Identification Of System:** Control Rod Drive (CRD)
5. **(a) Applicable Construction Code:** ASME Section III, Code Class 1 - See Notes For Code Edition, Addenda And Code Cases
   (b) Applicable Edition Of ASME Section XI Utilized For Repairs Or Replacements: 1989 Edition with no Addenda, Code Case: None
6. **Identification Of Components Repaired Or Replaced And Replacement Components**

Name Of Component	Name Of Manufacturer	Manufacturer's Serial No	National Board No	Other I.D.	Year Built	Repaired, Replaced Or Replacement	ASME Code Stamped (Yes Or No) Code Class
CRD	General Electric	6717	N/A	N/A	1975	----------	Yes, Code Class 1

7. **Description Of Work Performed:** Overhauled Control Rod Drive (CRD) assembly Serial No 6717. The overhaul work was performed in accordance with plant procedure PPM No 10.5.4 "Control Rod Drive Overhaul" as follows:
   1) Disassembled Control Rod Drive (CRD) assembly for overhaul.
   2) Performed liquid penetrant (PT) examination on the existing Cylinder Tube And Flange (CT&F) assembly Serial No 6717. Liquid penetrant (PT) examination results acceptable.
   3) Performed VT-3 visual examination on the existing ring flange cap screws. VT-3 visual examination results acceptable.
   4) Performed VT-3 visual examination on the existing piston tube nut Serial No 3068. VT-3 visual examination results acceptable.
   5) Reinstalled existing Piston Tube (PT) assembly Serial No 5351.
   6) Reinstalled existing ring flange Serial No 2441.
   7) Reinstalled VT-3 visually examined existing piston tube nut Serial No 3068.
   8) Reinstalled VT-3 visually examined existing ring flange cap screws.

NOTES -

1) ASME Section III Code Cases are as listed on the N-2 Code Data Report for the Control Rod Drive (CRD) assembly Serial No 6717.
2) ASME pressure boundary (retaining) parts and materials such as Cylinder Tube And Flange (CT&F) assembly, Piston Tube (PT) assembly, ring flange, ring flange cap screws and piston tube nut were not replaced during CRD overhaul activities.
3) The Control Rod Drive (CRD) assembly Serial No 6717 is certified to comply with ASME Section III, Code Class 1, 1971 Edition with no Addenda.
4) The entire Control Rod Drive (CRD) assembly is identified by the Cylinder Tube And Flange (CT&F) Serial No 6713.

WOT No 01062290 06

ENERGY NORTHWEST
People·Vision·Solutions

FORM NIS-2 OWNER'S REPORT FOR REPAIRS OR REPLACEMENTS (Back)

8 Tests Conducted: Hydrostatic [ ] Pneumatic [ ] Nominal Operating Pressure [ ] None [X]
Test Pressure: Psig Test Temperature: °F
Component Design Pressure: Psig Temperature: °F

9. Remarks (Applicable Manufacturer's Data Reports to be attached): None

CERTIFICATE OF COMPLIANCE

We certify that the statements made in this Owner's Report are correct and this replacement conforms to the rules of the ASME Code, Section XI.
Type Code Symbol Stamp: Not Applicable
Certificate Of Authorization No.: Not Applicable
Expiration Date: Not Applicable

Prepared By Kuldip Singh - Program Lead Engineer (PLE) Signed By Kuldip Singh - Program Lead Engineer (PLE)

Date 1/7/05 Date 1/7/05

CERTIFICATE OF INSERVICE INSPECTION

I, the undersigned, holding a valid commission issued by the National Board of Boiler and Pressure Vessel Inspectors and the State of Washington and employed by Hartford Steam Boiler Of Connecticut of Hartford, Connecticut have inspected the components described in this Owner's Report during the period 7/21/2004 to 3/15/2005 and state to the best of my knowledge and belief, the Owner has performed examinations and taken corrective measures described in this Owner's Report in accordance with the requirements of the ASME Code, Section XI.
By signing this certificate neither the Inspector nor his employer makes any warranty, expressed or implied, concerning the examinations and corrective measures described in this Owner's Report. Furthermore, neither the Inspector nor his employer shall be liable in any manner for any personal injury or property damage or a loss of any kind arising from or connected with this inspection.

Inspector's Signature Commissions 10655W A, B, N, I
National Board, State, and Endorsements

Date 3/15/2005

WOT No 01062290 07

ENERGY NORTHWEST
People·Vision·Solutions

FORM NIS-2 OWNER'S REPORT FOR REPAIRS OR REPLACEMENTS
As Required By The Provisions Of The ASME Code Section XI

1. Owner: Energy Northwest
Address: Columbia Generating Station, North Power Plant Loop, Richland, Washington, 99352
2. Plant: Columbia Generating Station
Address: Columbia Generating Station, North Power Plant Loop, Richland, Washington, 99352

Date: 01/03/05
Sheet: 1 Of 1
Unit: Not Applicable

3. (a) Work Performed By: Energy Northwest
(b) Repair Organization P.O. No, Job No, etc.: Energy Northwest
(c) Type Code Symbol Stamp: Not Applicable
(d) Certificate Of Authorization No.: Not Applicable
(e) Expiration Date: Not Applicable
4. Identification Of System: Control Rod Drive (CRD)
5. (a) Applicable Construction Code: ASME Section III, Code Class 1 - See Notes For Code Edition, Addenda And Code Cases
(b) Applicable Edition Of ASME Section XI Utilized For Repairs Or Replacements: 1989 Edition with no Addenda, Code Case: None
6. Identification Of Components Repaired Or Replaced And Replacement Components

Name Of Component	Name Of Manufacturer	Manufacturer's Serial No	National Board No	Other I.D.	Year Built	Repaired, Replaced Or Replacement	ASME Code Stamped (Yes Or No) Code Class
CRD	General Electric	4608	N/A	N/A	1975	----------	Yes, Code Class 1
CT&F	General Electric	4608	N/A	N/A	1975	Replaced	Yes, Code Class 1
CT&F	General Electric	A9376	N/A	N/A	1996	Replacement	Yes, Code Class 1

7. Description Of Work Performed: Overhauled Control Rod Drive (CRD) assembly Serial No 4608. The overhaul work was performed in accordance with plant procedure PPM No 10.5.4 "Control Rod Drive Overhaul" as follows:

1) Disassembled Control Rod Drive (CRD) assembly for overhaul.
2) Performed liquid penetrant (PT) examination on the existing Cylinder Tube And Flange (CT&F) assembly Serial No 4608. Liquid penetrant (PT) examination results unacceptable.
3) Performed VT-3 visual examination on the existing ring flange cap screws. VT-3 visual examination results acceptable.
4) Performed VT-3 visual examination on the existing piston tube nut Serial No 2862. VT-3 visual examination results acceptable.
5) Installed replacement Cylinder Tube And Flange (CT&F) assembly Serial No A9376.
6) Reinstalled existing Piston Tube (PT) assembly Serial No 4408.
7) Reinstalled existing ring flange Serial No 1993.
8) Reinstalled VT-3 visually examined existing piston tube nut Serial No 2862.
9) Reinstalled VT-3 visually examined existing ring flange cap screws.

NOTES -

1) ASME Section III Code Cases are as listed on the N-2 Code Data Report for the Control Rod Drive (CRD) assembly Serial No A9376.
2) The existing Cylinder Tube And Flange (CT&F) assembly Serial No 4608 is certified to comply with ASME Section III, Code Class 1, 1971 Edition with no Addenda.
3) ASME pressure boundary (retaining) parts and materials such as Piston Tube (PT) assembly, ring flange, ring flange cap screws and piston tube nut were reused during CRD overhaul activities with the exception of Cylinder Tube And Flange (CT&F) assembly which was replaced.
4) The replacement Cylinder Tube And Flange (CT&F) assembly Serial No A9376 is certified to comply with ASME Section III, Code Class 1, 1974 Edition with Winter 1975 Addenda.
5) The entire Control Rod Drive (CRD) assembly is identified by the Cylinder Tube And Flange (CT&F) Serial No A9376.

WOT No 01062290 07

ENERGY NORTHWEST
People·Vision·Solutions

FORM NIS-2 OWNER'S REPORT FOR REPAIRS OR REPLACEMENTS (Back)

8 Tests Conducted: Hydrostatic [ ] *Pneumatic* [ ] *Nominal Operating Pressure* [ ] *None* [X]
Test Pressure: Psig *Test Temperature:* °F
Component Design Pressure: Psig *Temperature:* °F

9. Remarks (Applicable Manufacturer's Data Reports to be attached): See attached N-2 Code Data Report for the replacement Cylinder Tube And Flange (CT&F) assembly Serial No A9376.

CERTIFICATE OF COMPLIANCE

We certify that the statements made in this Owner's Report are correct and this replacement *conforms to the rules of the ASME Code, Section XI.*
Type Code Symbol Stamp: Not Applicable
Certificate Of Authorization No.: Not Applicable
Expiration Date: Not Applicable

Prepared By Kuldip Singh - Program Lead Engineer (PLE) *Signed By* Kuldip Singh - Program Lead Engineer (PLE)

Date 1/7/05 *Date* 1/7/05

CERTIFICATE OF INSERVICE INSPECTION

I, the undersigned, holding a valid commission issued by the National Board of Boiler and Pressure Vessel Inspectors and the State of Washington *and employed by* Hartford Steam Boiler Of Connecticut of Hartford, Connecticut *have inspected the components described in this Owner's Report during the period* 7/21/04 *to* 3/15/2005 *and state to the best of my knowledge and belief, the Owner has performed examinations and taken corrective measures described in this Owner's Report in accordance with the requirements of the ASME Code, Section XI.*
By signing this certificate neither the Inspector nor his employer makes any warranty, expressed or implied, concerning the examinations and corrective measures described in this Owner's Report. Furthermore, neither the Inspector nor his employer shall be liable in any manner for any personal injury or property damage or a loss of any kind arising from or connected with this inspection.

Inspector's Signature *Commissions* 10655W A, B, N, E
National Board, State, and Endorsements

Date 3/15/2005

WOT NO. 01062290 07

FORM N-2 NPT CERTIFICATE HOLDERS' DATA REPORT FOR NUCLEAR PART AND APPURTENANCES*
As required by the Provision of the ASME Code Rules, Section III, Div. I

1/18/05

1. Manufactured & Certified by : General Electric Company Nuclear Energy (GE-NE)
3901 Castle Hayne Road, Wilmington, North Carolina 28401
(Name and Address of NPT Certificate Holder)

(b) Manufactured for : WNP 2 Richland, Washington 99352
(Name and Address of N Certificate Holder for completed nuclear component)

2. Identification - Certificate Holder's S/N of Part : A9376 Nat'l Bd. No. N/A

(a) Constructed According to Drawing No: 919D258G003 Rev 18 Dwg. Prepared by D. L. Peterson

(b) Description of Part Inspected: Cylinder Tube & Flange

(c) Applicable ASME Code: Section III , Edition 1974 , Addenda Date W'75 , Case No. 1361-2 Class 1

3. REMARKS: Standard part for use with Reactor. Hydrostatically tested at 1825 psi. min.
(Brief description of service for which component was designed)

Sheet 1 of 2

We certify that the statements in this report are correct and this vessel part or appurtenance as defined in the code conforms to the rules of construction of the ASME Code Section III. (The applicable Designed Specification and Stress Report are not the responsibility of the NPT Certificate Holder for parts. An NPT Certification Holder for appurtenances is responsible for furnishing a separate Design Specification and Stress Report if the appurtenance is not included in the component Design Specification and Stress Report).

Date: 03/28/96 Signed GE-NE By C.S. Bazzett
(NPT Certificate Holder) (SC QA Representive)

Certificate of Authorization Expires: 6/16/96 Certification of Authorization No. : NPT N - 1151

Certification of Design for Appurtenance

Design information on file at GE Company, San Jose, California

Stress analysis report on file at GE Company, San Jose, California

DC22A6253 Rev. 2
Design specification certified by B.N. Sridhar Prof. Eng. State Calif. Reg. No. 18345

DC22A6254 Rev 1
Stress analysis report certified by Edward Yoshio Prof. Eng. State Calif. Reg. No. M018646

Certification of Shop Inspection

I, the undersigned, holding a valid commission by the National Board of Boiler and Pressure Inspectors and/or the State or Province of North Carolina and employed by Department of Labor of State of North Carolina have inspected the part of a pressure vessel described in this Partial Data Report on 3-29, 96, and state that to the best of my knowledge and belief, the NPT Certificate Holder has constructed this part in accordance with the ASME Code Section III.
By signing this certificate, neither the Inspector nor his employer makes any warranty, expressed or implied, concerning the part described in the Partial Data Report. Furthermore, neither the Inspector nor his employer shall be liable in any manner for any personal injury or property damages or a loss of any kind arising from or connected with this inspection.

3-29, 96 Thomas Fuss NC 856
Date Inspector's Signature National Board, State, Province And No.

*Supplemental sheets in form of lists, sketches or drawing may be used provided (1) size is 8-1/2" x 11", (2) information in 1-2 on this Data Report is included on each sheet, and (3) each sheet is numbered and number of sheets is recorded in Item 3. "REMARKS".

(07/90)

FORM N-2 (back)

Items 4-8 Incl. to be completed for single wall vessels, jackets vessels, or shells of heat exchangers.

4. Shell: Material _____ T.S. _____ Nominal Thickness ___ in. Corrosion Allowance ___ in. Dia. ___ ft. ___ in. Length ___ ft. ___
(Kind & Spec. No.) (Min. of Range Specified)

5. Seams: Long _____ H.T.[1] _____ R.T. _____ Efficiency _____%
Girth _____ H.T.[1] _____ R.T. _____ No. of Courses _____

6. Heads: (a) Material _____ T.S. _____ (b) Material _____ T.S. _____

	Location (Top Bottom, Ends)	Thickness	Crown Radius	Knuckle Radius	Elliptical Ratio	Concial Apex Angle	Hemispherical Radius	Flat Diameter	Side to Press. (conv. or conc.)
(a)									
(b)									

If removable, bolts used _____ (Material, Spec. No., T.S. Size Number) Other fastening _____ (Describe or attach sketch)

7. Jacket Closure: _____
(Describe as ogee and weld, bar, etc. If bar give dimensions, if bolts, describe or sketch)

Drop Weight _____
Charpy Impact _____ ft-lb

8. Design pressure[2] 1250 psi at 575 °F at temp of _____ °F

Items 9 and 10 to be completed for tube sections

9. Tube Sheets: Stationary. Material _____ (Kind & Spec. No.) Dia. _____ (Subject to pressure) Thickness ___ in. Attachment _____ (Welded, Bolted)
Floating. Material _____ Dia. _____ Thickness ___ in. Attachment _____

10. Tubes: Material _____ O.D. _____ in. Thickness _____ inches or gage. Number _____ Type _____ (Str. or U)

Items 11 - 14 incl. to be completed for inner chambers of jacketed vessels, or channels of heat exchangers.

11. Shell: Material _____ T.S. _____ Nominal Thickness ___ in. Corrosion Allowance ___ in. Dia. ___ ft. ___ in. Length ___ ft. ___
(Kind & Spec. No.) (Min. of Range Specified)

12. Seams: Long _____ H.T.[1] _____ R.T. _____ Efficiency _____%
Girth _____ H.T.[1] _____ R.T. _____ No. of Courses _____

13. Heads: (a) Material _____ T.S. _____ (b) Material _____ T.S. _____

	Location	Thickness	Crown Radius	Knuckle Radius	Elliptical Ratio	Concial Apex Angle	Hemispherical Radius	Flat Diameter	Side to Press. (conv. or conc.)
(a)	Top, bottom, ends								
(b)	Channel								

If removable, bolts used (a)_____ (b)_____ (c)_____ Other fastening _____ (Describe or attach sketch)

Drop Weight _____
Charpy Impact _____ ft-lb

14. Design pressure[2] _____ psi at _____ °F at temp of _____ °F

Items below to be completed for all vessels where applicable.

15. Safety Valve Outlets: Number _____ Size _____ Location _____

16. Nozzles:

Purpose (Inlet, Outlet, Drain)	Number	Dia. or Size	Type	Material	Thickness	Reinforcement Material	How Attached

17. Inspection Openings: Manholes, No. _____ Size _____ Location _____
Handholes, No. _____ Size _____ Location _____
Threaded, No. _____ Size _____ Location _____

18. Supports: Skirt _____ (Yes or No) Lugs _____ (Number) Legs _____ (Number) Other _____ (Describe) Attached _____ (Where & How)

1 - If Postweld Heat-Treated.
2 - List other internal or external pressure with coincident temperature when applicable.

WOT No. 01062290 07

FORM N-2 NPT CERTIFICATE HOLDERS' DATA REPORT FOR NUCLEAR PART AND APPURTENANCES*

As required by the Provision of the ASME Code Rules, Section III, Div. I

Philip Smith 1/18/05

Manufactured & Certified by : General Electric Company Nuclear Energy (GE-NE)

3901 Castle Hayne Road, Wilmington, North Carolina 28401

(Name and Address of NPT Certificate Holder)

(b) Manufactured for : WNP 2 Richland, Washington 99352

(Name and Address of N Certificate Holder for completed nuclear component)

2. Identification - Certificate Holder's S/N of Part : A9376 Nat'l Bd. No. N/A

(a) Constructed According to Drawing No: 919D258G003 Rev 18 Dwg. Prepared by D. L. Peterson

(b) Description of Part Inspected: Cylinder Tube & Flange

(c) Applicable ASME Code: Section III , Edition 1974 , Addenda Date W'75 , Case No. 1361-2 Class 1

3. REMARKS: Standard part for use with Reactor. Hydrostatically tested at 1825 psi. min.

(Brief description of service for which component was designed)

1. Cap 166B9274P001
   SA182 - F316
   3/8" thick x 1 1/16" OD

2. Indicator Tube 167B4908P001
   SA312 - TP316
   3/4" sch 40 - seamless pipe
   0.113" wall thickness
   1.065" max. dia.

3. Plug 159A1176P001
   SA182 - F304
   1/4" thick x 0.812" OD

4. Flange 919D610P001 (719E474)
   SA182 - F304
   3.37" thick x 9 5/8" OD

5. Head 129B3539P005
   SA182 - F304
   7/8" thick x 2.875" dia.

6. Ring Flange 114B5122P002
   SA182 - F304
   1" thick x 5.0" OD x 1.75" ID

7. Cap Screw 117C4516P002
   SA193 - B6
   6 ea. 1/2" dia. on 4 1/8" bolt circle

8. Plug 175A7961P001
   SA182 - F304
   0.38" thick x 1.307" dia.

9. Nut 114B5460P001
   XM - 19 SA479
   1.30" thick x 2.62" dia.

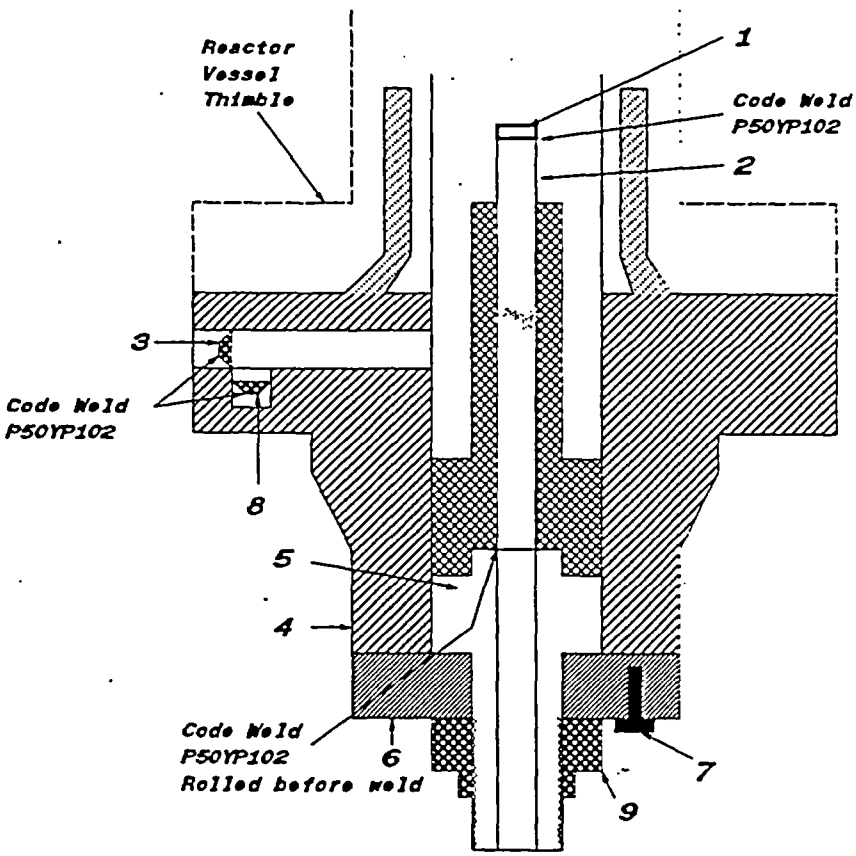

WOT No 01062290 08

ENERGY NORTHWEST
People·Vision·Solutions

FORM NIS-2 OWNER'S REPORT FOR REPAIRS OR REPLACEMENTS
As Required By The Provisions Of The ASME Code Section XI

Date: 01/03/05
Sheet: 1 Of 1
Unit: Not Applicable

1. **Owner:** Energy Northwest
   Address: Columbia Generating Station, North Power Plant Loop, Richland, Washington, 99352
2. **Plant:** Columbia Generating Station
   Address: Columbia Generating Station, North Power Plant Loop, Richland, Washington, 99352
3. **(a) Work Performed By:** Energy Northwest
   (b) Repair Organization P.O. No, Job No, etc.: Energy Northwest
   (c) Type Code Symbol Stamp: Not Applicable
   (d) Certificate Of Authorization No.: Not Applicable
   (e) Expiration Date: Not Applicable
4. **Identification Of System:** Control Rod Drive (CRD)
5. **(a) Applicable Construction Code:** ASME Section III, Code Class 1 - See Notes For Code Edition, Addenda And Code Cases
   (b) Applicable Edition Of ASME Section XI Utilized For Repairs Or Replacements: 1989 Edition with no Addenda, Code Case: None
6. **Identification Of Components Repaired Or Replaced And Replacement Components**

Name Of Component	Name Of Manufacturer	Manufacturer's Serial No	National Board No	Other I.D.	Year Built	Repaired, Replaced Or Replacement	ASME Code Stamped (Yes Or No) Code Class
CRD	General Electric	6178	N/A	N/A	1975	----------	Yes, Code Class 1
CT&F	General Electric	6178	N/A	N/A	1975	Replaced	Yes, Code Class 1
CT&F	General Electric	A9413	N/A	N/A	1996	Replacement	Yes, Code Class 1

7. **Description Of Work Performed:** Overhauled Control Rod Drive (CRD) assembly Serial No 6178. The overhaul work was performed in accordance with plant procedure PPM No 10.5.4 "Control Rod Drive Overhaul" as follows:
   1) Disassembled Control Rod Drive (CRD) assembly for overhaul.
   2) Performed liquid penetrant (PT) examination on the existing Cylinder Tube And Flange (CT&F) assembly Serial No 6178. Liquid penetrant (PT) examination results unacceptable.
   3) Performed VT-3 visual examination on the existing ring flange cap screws. VT-3 visual examination results acceptable.
   4) Performed VT-3 visual examination on the existing piston tube nut Serial No 3075. VT-3 visual examination results acceptable.
   5) Installed replacement Cylinder Tube And Flange (CT&F) assembly Serial No A9413.
   6) Reinstalled existing Piston Tube (PT) assembly Serial No 5293.
   7) Reinstalled existing ring flange Serial No 2500.
   8) Reinstalled VT-3 visually examined existing piston tube nut Serial No 2862.
   9) Reinstalled VT-3 visually examined existing ring flange cap screws.

NOTES -

1) ASME Section III Code Cases are as listed on the N-2 Code Data Report for the Control Rod Drive (CRD) assembly Serial No A9413.
2) The existing Cylinder Tube And Flange (CT&F) assembly Serial No 6178 is certified to comply with ASME Section III, Code Class 1, 1971 Edition with no Addenda.
3) ASME pressure boundary (retaining) parts and materials such as Piston Tube (PT) assembly, ring flange, ring flange cap screws and piston tube nut were reused during CRD overhaul activities with the exception of Cylinder Tube And Flange (CT&F) assembly which was replaced.
4) The replacement Cylinder Tube And Flange (CT&F) assembly Serial No A9413 is certified to comply with ASME Section III, Code Class 1, 1974 Edition with Winter 1975 Addenda.
5) The entire Control Rod Drive (CRD) assembly is identified by the Cylinder Tube And Flange (CT&F) Serial No A9413.

WOT No 01062290 08

ENERGY NORTHWEST
People·Vision·Solutions

FORM NIS-2 OWNER'S REPORT FOR REPAIRS OR REPLACEMENTS (Back)

8 Tests Conducted: Hydrostatic [ ] *Pneumatic* [ ] *Nominal Operating Pressure* [ ] *None* [X]
Test Pressure: Psig *Test Temperature:* °F
Component Design Pressure: Psig *Temperature:* °F

9. Remarks (Applicable Manufacturer's Data Reports to be attached): See attached N-2 Code Data Report for the replacement Cylinder Tube And Flange (CT&F) assembly Serial No A9413.

CERTIFICATE OF COMPLIANCE

We certify that the statements made in this Owner's Report are correct and this replacement *conforms to the rules of the ASME Code, Section XI.*
Type Code Symbol Stamp: Not Applicable
Certificate Of Authorization No.: Not Applicable
Expiration Date: Not Applicable

Prepared By Kuldip Singh — Kuldip Singh - Program Lead Engineer (PLE)
Date 1/10/05

Signed By Kuldip Singh — Kuldip Singh - Program Lead Engineer (PLE)
Date 1/10/05

CERTIFICATE OF INSERVICE INSPECTION

I, the undersigned, holding a valid commission issued by the National Board of Boiler and Pressure Vessel Inspectors and the State of Washington *and employed by* Hartford Steam Boiler Of Connecticut of Hartford, Connecticut *have inspected the components described in this Owner's Report during the period* 7/26/2004 *to* 3/15/2005 *and state to the best of my knowledge and belief, the Owner has performed examinations and taken corrective measures described in this Owner's Report in accordance with the requirements of the ASME Code, Section XI.*
By signing this certificate neither the Inspector nor his employer makes any warranty, expressed or implied, concerning the examinations and corrective measures described in this Owner's Report. Furthermore, neither the Inspector nor his employer shall be liable in any manner for any personal injury or property damage or a loss of any kind arising from or connected with this inspection.

Inspector's Signature

Commissions 10655 W A, B, N, I
National Board, State, and Endorsements

Date 3/15/2005

W07 01062290 08

FORM N-2 NPT CERTIFICATE HOLDERS' DATA REPORT FOR NUCLEAR PART AND APPURTENANCES*

As required by the Provision of the ASME Code Rules, Section III, Div. I

1. Manufactured & Certified by : General Electric Company Nuclear Fuel & Components Manufacturing (GE NF & CM)

   2117 Castle Hayne Road, Wilmington, North Carolina 28401

   (Name and Address of NPT Certificate Holder)

   (b) Manufactured for : WNP 2 Richland, Washington 99352

   (Name and Address of N Certificate Holder for completed nuclear component)

2. Identification - Certificate Holder's S/N of Part : A9413 Nat'l Bd. No. N/A

   (a) Constructed According to Drawing No: 919D258G003 Rev 18 Dwg. Prepared by D. L. Peterson

   (b) Description of Part Inspected: Cylinder Tube & Flange

   (c) Applicable ASME Code: Section III , Edition 1974 , Addenda Date W'75 , Case No. 1361-2 Class 1

3. REMARKS: Standard part for use with Reactor. Hydrostatically tested at 1825 psi. min.

   (Brief description of service for which component was designed)

Sheet 1 of 2

We certify that the statements in this report are correct and this vessel part or appurtenance as defined in the code conforms to the rules of construction of the ASME Code Section III. (The applicable Designed Specification and Stress Report are not the responsibility of the NPT Certificate Holder for parts. An NPT Certification Holder for appurtenances is responsible for furnishing a separate Design Specification and Stress Report if the appurtenance is not included in the component Design Specification and Stress Report).

Date: 06/27/95 Signed GE - NEBG - NF & CM - QA By

(NPT Certificate Holder) (GE QA Representative)

Certificate of Authorization Expires: 6/16/96 Certification of Authorization No. : NPT N - 1151

Certification of Design for Appurtenance

Design information on file at GE Company, San Jose, California

Stress analysis report on file at GE Company, San Jose, California

DC22A6253 Rev. 1
Design specification certified by Bjorn Haaberg Prof. Eng. State Calif. Reg. No. 15570

DC22A6254 Rev 1
Stress analysis report certified by Edward Yoshio Prof. Eng. State Calif. Reg. No. M018646

Certification of Shop Inspection

I, the undersigned, holding a valid commission by the National Board of Boiler and Pressure Inspectors and/or the State or Province of North Carolina and employed by Department of Labor of State of North Carolina have inspected the part of a pressure vessel described in this Partial Data Report on 5/16, 1995, and state that to the best of my knowledge and belief, the NPT Certificate Holder has constructed this part in accordance with the ASME Code Section III.

By signing this certificate, neither the Inspector nor his employer makes any warranty, expressed or implied, concerning the part described in the Partial Data Report. Furthermore, neither the Inspector nor his employer shall be liable in any manner for any personal injury or property damages or a loss of any kind arising from or connected with this inspection.

6/27, 1995	Jerome P Ewen	NC 1231, Ohio, WC 3686 PA
Date	Inspector's Signature	National Board, State, Province And No.

*Supplemental sheets in form of lists, sketches or drawing may be used provided (1) size is 8-1/2" x 11", (2) information in 1-2 on this Data Report is included on each sheet, and (3) each sheet is numbered and number of sheets is recorded in Item 3. "REMARKS".

(07/90)

FORM N-2 (back)

Items 4-8 Incl. to be completed for single wall vessels, jackets vessels, or shells of heat exchangers.

4. Shell: Material _____ T.S. _____ Nominal Thickness ___ in. Corrosion Allowance ___ in. Dia. ___ ft. ___ in. Length ___ ft. ___ in.
(Kind & Spec. No.) (Min. of Range Specified)

5. Seams: Long _____ H.T.[1] _____ R.T. _____ Efficiency _____%
Girth _____ H.T.[1] _____ R.T. _____ No. of Courses _____

6. Heads: (a) Material _____ T.S. _____ (b) Material _____ T.S. _____

	Location (Top Bottom, Ends)	Thickness	Crown Radius	Knuckle Radius	Elliptical Ratio	Concial Apex Angle	Hemispherical Radius	Flat Diameter	Side to Press. (conv. or conc.)
(a)									
(b)									

If removable, bolts used _____ (Material, Spec. No., T.S. Size Number) Other fastening _____ (Describe or attach sketch)

7. Jacket Closure: _____
(Describe as ogee and weld, bar, etc. If bar give dimensions, if bolts, describe or sketch)

Drop Weight _____
Charpy Impact _____ ft-lb

8. Design pressure[2] 1250 psi at 575 °F at temp of _____ °F

Items 9 and 10 to be completed for tube sections

9. Tube Sheets: Stationary. Material _____ (Kind & Spec. No.) Dia. _____ (Subject to pressure) Thickness ___ in. Attachment _____ (Welded, Bolted)
Floating. Material _____ Dia. _____ Thickness ___ in. Attachment _____

10. Tubes: Material _____ O.D. _____ in. Thickness _____ inches or gage. Number _____ Type _____ (Str. or U)

Items 11 - 14 incl. to be completed for inner chambers of jacketed vessels, or channels of heat exchangers.

11. Shell: Material _____ T.S. _____ Nominal Thickness ___ in. Corrosion Allowance ___ in. Dia. ___ ft. ___ in. Length ___ ft. ___ in.
(Kind & Spec. No.) (Min. of Range Specified)

12. Seams: Long _____ H.T.[1] _____ R.T. _____ Efficiency _____%
Girth _____ H.T.[1] _____ R.T. _____ No. of Courses _____

13. Heads: (a) Material _____ T.S. _____ (b) Material _____ T.S. _____

	Location	Thickness	Crown Radius	Knuckle Radius	Elliptical Ratio	Concial Apex Angle	Hemispherical Radius	Flat Diameter	Side to Press. (conv. or conc.)
(a)	Top, bottom, ends								
(b)	Channel								

If removable, bolts used (a)_____ (b)_____ (c)_____ Other fastening _____ (Describe or attach sketch)

Drop Weight _____
Charpy Impact _____ ft-lb

14. Design pressure[2] _____ psi at _____ °F at temp of _____ °F

Items below to be completed for all vessels where applicable.

15. Safety Valve Outlets: Number _____ Size _____ Location _____

16. Nozzles:

Purpose (Inlet, Outlet, Drain)	Number	Dia. or Size	Type	Material	Thickness	Reinforcement Material	How Attached

17. Inspection Openings: Manholes, No. _____ Size _____ Location _____
Handholes, No. _____ Size _____ Location _____
Threaded, No. _____ Size _____ Location _____

18. Supports: Skirt _____ (Yes or No) Lugs _____ (Number) Legs _____ (Number) Other _____ (Describe) Attached _____ (Where & How)

1 - If Postweld Heat-Treated.
2 - List other internal or external pressure with coincident temperature when applicable.

WOT No. 0106229008

FORM N-2 NPT CERTIFICATE HOLDERS' DATA REPORT FOR NUCLEAR PART AND APPURTENANCES*

As required by the Provision of the ASME Code Rules, Section III, Div. I

1/18/05

Manufactured & Certified by : General Electric Company Nuclear Fuel & Components Manufacturing (GE NF & CM)

2117 Castle Hayne Road, Wilmington, North Carolina 28401

(Name and Address of NPT Certificate Holder)

(b) Manufactured for : WNP 2 Richland, Washington 99352

(Name and Address of N Certificate Holder for completed nuclear component)

2. Identification - Certificate Holder's S/N of Part : A9413 Nat'l Bd. No. N/A

(a) Constructed According to Drawing No: 919D258G003 Rev 18 Dwg. Prepared by D. L. Peterson

(b) Description of Part Inspected: Cylinder Tube & Flange

(c) Applicable ASME Code: Section III , Edition 1974 , Addenda Date W'75 , Case No. 1361-2 Class 1

3. REMARKS: Standard part for use with Reactor. Hydrostatically tested at 1825 psi. min.

(Brief description of service for which component was designed)

Sheet 2 of 2

1. Cap 166B9274P001
   SA182 - F316
   3/8" thick x 1 1/16" OD

2. Indicator Tube 167B4908P001
   SA312 - TP316
   3/4" sch 40 - seamless pipe
   0.113" wall thickness
   1.065" max. dia.

3. Plug 159A1176P001
   SA182 - F304
   1/4" thick x 0.812" OD

4. Flange 919D610P001 (719E474)
   SA182 - F304
   3.37" thick x 9 5/8" OD

5. Head 129B3539P005
   SA182 - F304
   7/8" thick x 2.875" dia.

6. Ring Flange 114B5122P002
   SA182 - F304
   1" thick x 5.0" OD x 1.75" ID

7. Cap Screw 117C4516P002
   SA193 - B6
   6 ea. 1/2" dia. on 4 1/8" bolt circle

8. Plug 175A7961P001
   SA182 - F304
   0.38" thick x 1.307" dia.

9. Nut 114B5460P001
   XM - 19 SA479
   1.30" thick x 2.62" dia.

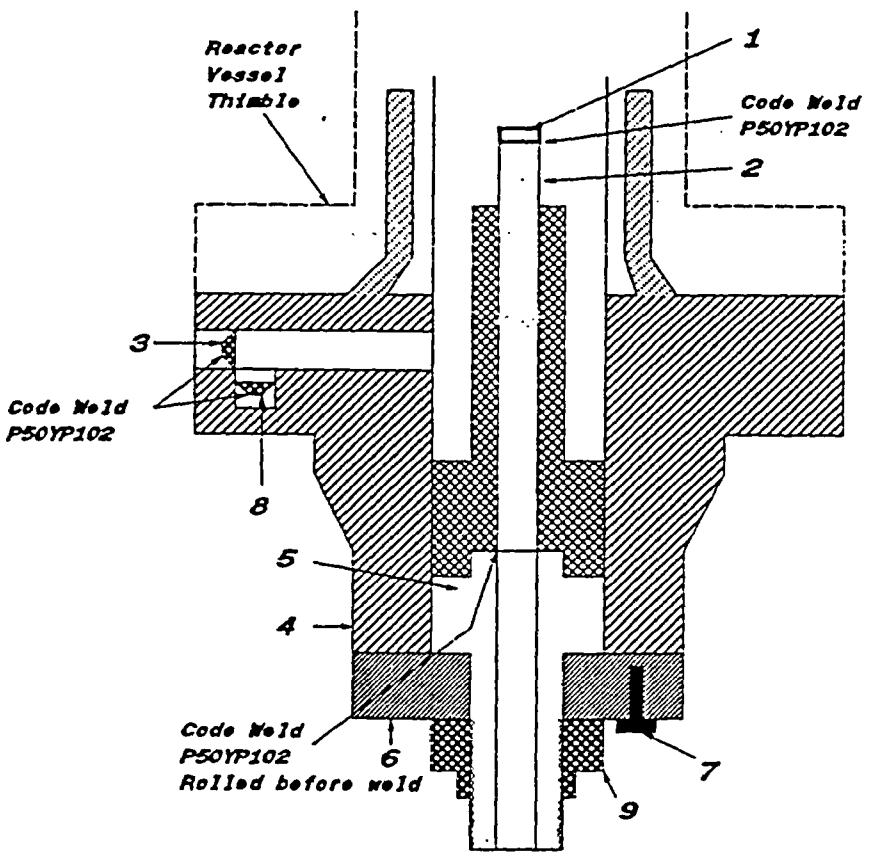

WOT No 01062290 09

ENERGY NORTHWEST
People·Vision·Solutions

FORM NIS-2 OWNER'S REPORT FOR REPAIRS OR REPLACEMENTS
As Required By The Provisions Of The ASME Code Section XI

1. Owner: Energy Northwest
Address: Columbia Generating Station, North Power Plant Loop, Richland, Washington, 99352
2. Plant: Columbia Generating Station
Address: Columbia Generating Station, North Power Plant Loop, Richland, Washington, 99352

Date: 01/03/05
Sheet: 1 Of 1
Unit: Not Applicable

3. (a) Work Performed By: Energy Northwest
(b) Repair Organization P.O. No, Job No, etc.: Energy Northwest
(c) Type Code Symbol Stamp: Not Applicable
(d) Certificate Of Authorization No.: Not Applicable
(e) Expiration Date: Not Applicable
4. Identification Of System: Control Rod Drive (CRD)
5. (a) Applicable Construction Code: ASME Section III, Code Class 1 - See Notes For Code Edition, Addenda And Code Cases
(b) Applicable Edition Of ASME Section XI Utilized For Repairs Or Replacements: 1989 Edition with no Addenda, Code Case: None
6. Identification Of Components Repaired Or Replaced And Replacement Components

Name Of Component	Name Of Manufacturer	Manufacturer's Serial No	National Board No	Other I.D.	Year Built	Repaired, Replaced Or Replacement	ASME Code Stamped (Yes Or No) Code Class
CRD	General Electric	A8743	N/A	N/A	1988	----------	Yes, Code Class 1

7. Description Of Work Performed: Overhauled Control Rod Drive (CRD) assembly Serial No A8743. The overhaul work was performed in accordance with plant procedure PPM No 10.5.4 "Control Rod Drive Overhaul" as follows:

1) Disassembled Control Rod Drive (CRD) assembly for overhaul.
2) Performed liquid penetrant (PT) examination on the existing Cylinder Tube And Flange (CT&F) assembly Serial No A8743. Liquid penetrant (PT) examination results acceptable.
3) Performed VT-3 visual examination on the existing ring flange cap screws. VT-3 visual examination results acceptable.
4) Performed VT-3 visual examination on the existing piston tube nut Serial No 2251. VT-3 visual examination results acceptable.
5) Reinstalled existing Piston Tube (PT) assembly Serial No 2941.
6) Reinstalled existing ring flange Serial No 1891.
7) Reinstalled VT-3 visually examined existing piston tube nut Serial No 2251.
8) Reinstalled VT-3 visually examined existing ring flange cap screws.

NOTES -

1) ASME Section III Code Cases are as listed on the N-2 Code Data Report for the Control Rod Drive (CRD) assembly Serial No A8743.
2) ASME pressure boundary (retaining) parts and materials such as Cylinder Tube And Flange (CT&F) assembly, Piston Tube (PT) assembly, ring flange, ring flange cap screws and piston tube nut were not replaced during CRD overhaul activities.
3) The Control Rod Drive (CRD) assembly Serial No A8743 is certified to comply with ASME Section III, Code Class 1, 1974 Edition with Winter 1975 Addenda.
4) The entire Control Rod Drive (CRD) assembly is identified by the Cylinder Tube And Flange (CT&F) Serial No A8743.

WOT No 01062290 09

ENERGY NORTHWEST
People·Vision·Solutions

FORM NIS-2 OWNER'S REPORT FOR REPAIRS OR REPLACEMENTS (Back)

8 Tests Conducted: Hydrostatic [ ] Pneumatic [ ] Nominal Operating Pressure [ ] None [X]
Test Pressure: Psig Test Temperature: °F
Component Design Pressure: Psig Temperature: °F

9. Remarks (Applicable Manufacturer's Data Reports to be attached): None

CERTIFICATE OF COMPLIANCE

We certify that the statements made in this Owner's Report are correct and this replacement conforms to the rules of the ASME Code, Section XI.
Type Code Symbol Stamp: Not Applicable
Certificate Of Authorization No.: Not Applicable
Expiration Date: Not Applicable

Prepared By Kuldip Singh - Program Lead Engineer (PLE) Signed By Kuldip Singh - Program Lead Engineer (PLE)

Date 1/10/05 Date 1/10/05

CERTIFICATE OF INSERVICE INSPECTION

I, the undersigned, holding a valid commission issued by the National Board of Boiler and Pressure Vessel Inspectors and the State of Washington and employed by Hartford Steam Boiler Of Connecticut of Hartford, Connecticut have inspected the components described in this Owner's Report during the period 7/26/2004 to 3/16/2005 and state to the best of my knowledge and belief, the Owner has performed examinations and taken corrective measures described in this Owner's Report in accordance with the requirements of the ASME Code, Section XI.
By signing this certificate neither the Inspector nor his employer makes any warranty, expressed or implied, concerning the examinations and corrective measures described in this Owner's Report. Furthermore, neither the Inspector nor his employer shall be liable in any manner for any personal injury or property damage or a loss of any kind arising from or connected with this inspection.

Inspector's Signature Commissions 1065W A, B, N, I
National Board, State, and Endorsements

Date 3/16/2005

WOT No 01062290 10

ENERGY NORTHWEST
People·Vision·Solutions

FORM NIS-2 OWNER'S REPORT FOR REPAIRS OR REPLACEMENTS
As Required By The Provisions Of The ASME Code Section XI

1. Owner: Energy Northwest
Address: Columbia Generating Station, North Power Plant Loop, Richland, Washington, 99352
2. Plant: Columbia Generating Station
Address: Columbia Generating Station, North Power Plant Loop, Richland, Washington, 99352

Date: 01/03/05
Sheet: 1 Of 1
Unit: Not Applicable

3. (a) Work Performed By: Energy Northwest
(b) Repair Organization P.O. No, Job No, etc.: Energy Northwest
(c) Type Code Symbol Stamp: Not Applicable
(d) Certificate Of Authorization No.: Not Applicable
(e) Expiration Date: Not Applicable
4. Identification Of System: Control Rod Drive (CRD)
5. (a) Applicable Construction Code: ASME Section III, Code Class 1 - See Notes For Code Edition, Addenda And Code Cases
(b) Applicable Edition Of ASME Section XI Utilized For Repairs Or Replacements: 1989 Edition with no Addenda, Code Case: None
6. Identification Of Components Repaired Or Replaced And Replacement Components

Name Of Component	Name Of Manufacturer	Manufacturer's Serial No	National Board No	Other I.D.	Year Built	Repaired, Replaced Or Replacement	ASME Code Stamped (Yes Or No) Code Class
CRD	General Electric	6326	N/A	N/A	1974	----------	Yes, Code Class 1
CT&F	General Electric	6326	N/A	N/A	1974	Replaced	Yes, Code Class 1
CT&F	General Electric	A9118	N/A	N/A	1993	Replacement	Yes, Code Class 1

7. Description Of Work Performed: Overhauled Control Rod Drive (CRD) assembly Serial No 6326. The overhaul work was performed in accordance with plant procedure PPM No 10.5.4 "Control Rod Drive Overhaul" as follows:

1) Disassembled Control Rod Drive (CRD) assembly for overhaul.
2) Performed liquid penetrant (PT) examination on the existing Cylinder Tube And Flange (CT&F) assembly Serial No 6326. Liquid penetrant (PT) examination results unacceptable.
3) Performed VT-3 visual examination on the existing ring flange cap screws. VT-3 visual examination results acceptable.
4) Performed VT-3 visual examination on the existing piston tube nut Serial No 2329. VT-3 visual examination results acceptable.
5) Installed replacement Cylinder Tube And Flange (CT&F) assembly Serial No A9118.
6) Reinstalled existing Piston Tube (PT) assembly Serial No 3224.
7) Reinstalled existing ring flange Serial No 2079.
8) Reinstalled VT-3 visually examined existing piston tube nut Serial No 2329.
9) Reinstalled VT-3 visually examined existing ring flange cap screws.

NOTES -

1) ASME Section III Code Cases are as listed on the N-2 Code Data Report for the Control Rod Drive (CRD) assembly Serial No A9118.
2) The existing Cylinder Tube And Flange (CT&F) assembly Serial No 6326 is certified to comply with ASME Section III, Code Class 1, 1971 Edition with no Addenda.
3) ASME pressure boundary (retaining) parts and materials such as Piston Tube (PT) assembly, ring flange, ring flange cap screws and piston tube nut were reused during CRD overhaul activities with the exception of Cylinder Tube And Flange (CT&F) assembly which was replaced.
4) The replacement Cylinder Tube And Flange (CT&F) assembly Serial No A9118 is certified to comply with ASME Section III, Code Class 1, 1974 Edition with Winter 1975 Addenda.
5) The entire Control Rod Drive (CRD) assembly is identified by the Cylinder Tube And Flange (CT&F) Serial No A9118.

WOT No 01062290 10

ENERGY NORTHWEST
People·Vision·Solutions

FORM NIS-2 OWNER'S REPORT FOR REPAIRS OR REPLACEMENTS (Back)

8 Tests Conducted: Hydrostatic [ ] Pneumatic [ ] Nominal Operating Pressure [ ] None [X]
Test Pressure: Psig Test Temperature: °F
Component Design Pressure: Psig Temperature: °F

9. Remarks (Applicable Manufacturer's Data Reports to be attached): See attached N-2 Code Data Report for the replacement Cylinder Tube And Flange (CT&F) assembly Serial No A9118.

CERTIFICATE OF COMPLIANCE

We certify that the statements made in this Owner's Report are correct and this replacement conforms to the rules of the ASME Code, Section XI.
Type Code Symbol Stamp: Not Applicable
Certificate Of Authorization No.: Not Applicable
Expiration Date: Not Applicable

Prepared By Kuldip Singh - Program Lead Engineer (PLE) Signed By Kuldip Singh - Program Lead Engineer (PLE)

Date 3/5/05 Date 3/5/05

CERTIFICATE OF INSERVICE INSPECTION

I, the undersigned, holding a valid commission issued by the National Board of Boiler and Pressure Vessel Inspectors and the State of Washington and employed by Hartford Steam Boiler Of Connecticut of Hartford, Connecticut have inspected the components described in this Owner's Report during the period 7/21/2004 to 3/15/2005 and state to the best of my knowledge and belief, the Owner has performed examinations and taken corrective measures described in this Owner's Report in accordance with the requirements of the ASME Code, Section XI.
By signing this certificate neither the Inspector nor his employer makes any warranty, expressed or implied, concerning the examinations and corrective measures described in this Owner's Report. Furthermore, neither the Inspector nor his employer shall be liable in any manner for any personal injury or property damage or a loss of any kind arising from or connected with this inspection.

Inspector's Signature Commissions 10655W A, B, N, I
National Board, State, and Endorsements

Date 3/15/2005

WOT No. 01062290 10

FORM N-2 NPT CERTIFICATE HOLDERS' DATA REPORT FOR NUCLEAR PART AND APPURTENANCES*

As required by the Provision of the ASME Code Rules, Section III, Div. I

1. Manufactured & Certified by : General Electric Company Nuclear Fuel & Components Manufacturing (GE NF & CM)

   2117 Castle Hayne Road, Wilmington, North Carolina 28401

   (Name and Address of NPT Certificate Holder)

   (b) Manufactured for : WNP 2 Richland, Washington 99352

   (Name and Address of N Certificate Holder for completed nuclear component)

2. Identification - Certificate Holder's S/N of Part : A9118 Nat'l Bd. No. N/A

   (a) Constructed According to Drawing No: 919D258G003 Rev 17 Dwg. Prepared by D. L. Peterson

   (b) Description of Part Inspected: Cylinder Tube & Flange

   (c) Applicable ASME Code: Section III , Edition 1974 , Addenda Date W75 , Case No. N207 1361-2 Class 1

3. REMARKS: Standard part for use with Reactor, Hydrostatically tested at 1825 psi, min.

   (Brief description of service for which component was designed)

Sheet 1 of 2

We certify that the statements in this report are correct and this vessel part or appurtenance as defined in the code conforms to the rules of construction of the ASME Code Section III. (The applicable Designed Specification and Stress Report are not the responsibility of the NPT Certificate Holder for parts. An NPT Certification Holder for appurtenances is responsible for furnishing a separate Design Specification and Stress Report if the appurtenance is not included in the component Design Specification and Stress Report).

Date: 01/28/93 Signed GE - NEBG - NF & CM - QA By

(NPT Certificate Holder) (SC QA Representive)

Certificate of Authorization Expires: 6/16/93 Certification of Authorization No. : NPT N - 1151

Certification of Design for Appurtenance

Design information on file at GE Company, San Jose, California

Stress analysis report on file at GE Company, San Jose, California

DC22A6253 Rev. 1
Design specification certified by Blom Haaberg Prof. Eng. State Calif. Reg. No. 15570

DC22A6254 Rev 1
Stress analysis report certified by Edward Yoshio Prof. Eng. State Calif. Reg. No. M018646

Certification of Shop Inspection

I, the undersigned, holding a valid commission by the National Board of Boiler and Pressure Inspectors and/or the State or Province of North Carolina and employed by Department of Labor of State of North Carolina have inspected the part of a pressure vessel described in this Partial Data Report on 1/26, 1993, and state that to the best of my knowledge and belief, the NPT Certificate Holder has constructed this part in accordance with the ASME Code Section III.

By signing this certificate, neither the Inspector nor his employer makes any warranty, expressed or implied, concerning the part described in the Partial Data Report. Furthermore, neither the Inspector nor his employer shall be liable in any manner for any personal injury or property damages or a loss of any kind arising from or connected with this inspection.

1/28, 1993	Jerome P Ferris	NC 1231, Ohio, WC 3686 PA
Date	Inspector's Signature	National Board, State, Province And No.

*Supplemental sheets in form of lists, sketches or drawing may be used provided (1) size is 8-1/2" x 11", (2) information in 1-2 on this Data Report is included on each sheet, and (3) each sheet is numbered and number of sheets is recorded in Item 3. "REMARKS".

(07/90)

FORM N-2 (back)

Items 4-8 Incl. to be completed for single wall vessels, jackets vessels, or shells of heat exchangers.

4. Shell: Material _____ T.S. _____ Nominal Thickness ___ in. Corrosion Allowance ___ in. Dia. ___ ft. ___ in. Length ___ ft. ___ in
(Kind & Spec. No.) (Min. of Range Specified)

5. Seams: Long _____ H.T.[1] _____ R.T. _____ Efficiency _____%
Girth _____ H.T.[1] _____ R.T. _____ No. of Courses _____

6. Heads: (a) Material _____ T.S. _____ (b) Material _____ T.S. _____

	Location (Top Bottom, Ends)	Thickness	Crown Radius	Knuckle Radius	Elliptical Ratio	Concial Apex Angle	Hemispherical Radius	Flat Diameter	Side to Press. (conv. or conc.)
(a)									
(b)									

If removable, bolts used _____ (Material, Spec. No., T.S. Size Number) Other fastening _____ (Describe or attach sketch)

7. Jacket Closure: _____
(Describe as ogee and weld, bar, etc. If bar give dimensions, if bolts, describe or sketch)

Drop Weight _____
Charpy Impact _____ ft-lb

8. Design pressure[2] 1250 psi at 575 °F at temp of _____ °F.

Items 9 and 10 to be completed for tube sections

9. Tube Sheets: Stationary. Material _____ (Kind & Spec. No.) Dia. _____ (Subject to pressure) Thickness ___ in. Attachment _____ (Welded, Bolted)
Floating. Material _____ Dia. _____ Thickness ___ in. Attachment _____

10. Tubes: Material _____ O.D. _____ in. Thickness _____ Inches or gage. Number _____ Type _____ (Str. or U)

Items 11 - 14 incl. to be completed for inner chambers of jacketed vessels, or channels of heat exchangers.

11. Shell: Material _____ T.S. _____ Nominal Thickness ___ in. Corrosion Allowance ___ in. Dia. ___ ft. ___ in. Length ___ ft. ___ in
(Kind & Spec. No.) (Min. of Range Specified)

12. Seams: Long _____ H.T.[1] _____ R.T. _____ Efficiency _____%
Girth _____ H.T.[1] _____ R.T. _____ No. of Courses _____

13. Heads: (a) Material _____ T.S. _____ (b) Material _____ T.S. _____

	Location	Thickness	Crown Radius	Knuckle Radius	Elliptical Ratio	Concial Apex Angle	Hemispherical Radius	Flat Diameter	Side to Press. (conv. or conc.)
(a)	Top, bottom, ends								
(b)	Channel								

If removable, bolts used (a)_____ (b)_____ (c)_____ Other fastening _____ (Describe or attach sketch)

Drop Weight _____
Charpy Impact _____ ft-lb

14. Design pressure[2] _____ psi at _____ °F at temp of _____ °F

Items below to be completed for all vessels where applicable.

15. Safety Valve Outlets: Number _____ Size _____ Location _____

16. Nozzles:

Purpose (Inlet, Outlet, Drain)	Number	Dia. or Size	Type	Material	Thickness	Reinforcement Material	How Attached

17. Inspection Openings: Manholes, No. _____ Size _____ Location _____
Handholes, No. _____ Size _____ Location _____
Threaded, No. _____ Size _____ Location _____

18. Supports: Skirt _____ (Yes or No) Lugs _____ (Number) Legs _____ (Number) Other _____ (Describe) Attached _____ (Where & How)

1 - If Postweld Heat-Treated.
2 - List other internal or external pressure with coincident temperature when applicable.

WO7 No. 01062290 10

FORM N-2 NPT CERTIFICATE HOLDERS' DATA REPORT FOR NUCLEAR PART AND APPURTENANCES*

As required by the Provision of the ASME Code Rules, Section III, Div. I

1. Manufactured & Certified by : General Electric Company Nuclear Fuel & Components Manufacturing (GE NF & CM)

   2117 Castle Hayne Road, Wilmington, North Carolina 28401

   (Name and Address of NPT Certificate Holder)

   (b) Manufactured for : WNP 2 Richland, Washington 99352

   (Name and Address of N Certificate Holder for completed nuclear component)

2. Identification - Certificate Holder's S/N of Part : A9118 Nat'l Bd. No. N/A

   (a) Constructed According to Drawing No: 919D258G003 Rev 17 Dwg. Prepared by D. L. Peterson

   (b) Description of Part Inspected: Cylinder Tube & Flange

   (c) Applicable ASME Code: Section III , Edition 1974 , Addenda Date W'75 , Case No. N207 1361-2 Class 1

3. REMARKS: Standard part for use with Reactor. Hydrostatically tested at 1825 psi. min.

   (Brief description of service for which component was designed)

1. Cap 166B9274P001
   SA182 - F304
   3/8" thick x 1 1/16" OD

2. Indicator Tube 166B9313P001
   SA312 - TP316
   3/4" sch 40 - seamless pipe
   0.113" wall thickness
   1.065" max. dia.

3. Plug 159A1176P001
   SA182 - F304
   1/4" thick x 0.812" OD

4. Flange 919D610P001 (719E474)
   SA182 - F304
   3.37" thick x 9 5/8" OD

5. Base 137C5311P001
   SA182 - F304
   7/8" thick x 2.875" dia.

6. Ring Flange 114B5122P002, P003
   137C8151P001, P002
   SA182 - F304
   1" thick x 5.0" OD x 1.75" ID

7. Cap Screw 117C4516P002
   SA193 - B6
   6 ea. 1/2" dia. on 4 1/8" bolt circle

8. Plug 175A7961P001
   SA182 - F304
   0.38" thick x 1.307" dia.

9. Nut 137C5934P001
   XM - 19 SA479
   1.30" thick x 2.62" dia.

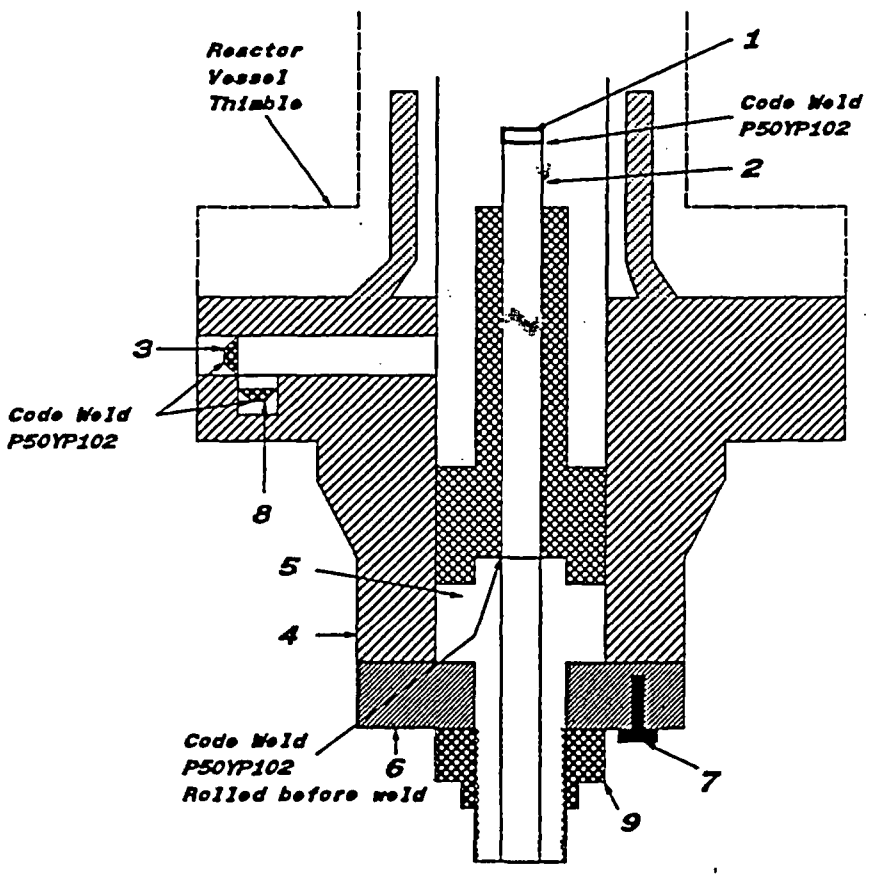

WOT No 01062290 11

ENERGY NORTHWEST
People·Vision·Solutions

FORM NIS-2 OWNER'S REPORT FOR REPAIRS OR REPLACEMENTS
As Required By The Provisions Of The ASME Code Section XI

1. Owner: Energy Northwest
Address: Columbia Generating Station, North Power Plant Loop, Richland, Washington, 99352
2. Plant: Columbia Generating Station
Address: Columbia Generating Station, North Power Plant Loop, Richland, Washington, 99352

Date: 01/03/05
Sheet: 1 Of 1
Unit: Not Applicable

3. (a) Work Performed By: Energy Northwest
(b) Repair Organization P.O. No, Job No, etc.: Energy Northwest
(c) Type Code Symbol Stamp: Not Applicable
(d) Certificate Of Authorization No.: Not Applicable
(e) Expiration Date: Not Applicable
4. Identification Of System: Control Rod Drive (CRD)
5. (a) Applicable Construction Code: ASME Section III, Code Class 1 - See Notes For Code Edition, Addenda And Code Cases
(b) Applicable Edition Of ASME Section XI Utilized For Repairs Or Replacements: 1989 Edition with no Addenda, Code Case: None
6. Identification Of Components Repaired Or Replaced And Replacement Components

Name Of Component	Name Of Manufacturer	Manufacturer's Serial No	National Board No	Other I.D.	Year Built	Repaired, Replaced Or Replacement	ASME Code Stamped (Yes Or No) Code Class
CRD	General Electric	A8478	N/A	N/A	1989	----------	Yes, Code Class 1

7. Description Of Work Performed: Overhauled Control Rod Drive (CRD) assembly Serial No A8478. The overhaul work was performed in accordance with plant procedure PPM No 10.5.4 "Control Rod Drive Overhaul" as follows:

1) Disassembled Control Rod Drive (CRD) assembly for overhaul.
2) Performed liquid penetrant (PT) examination on the existing Cylinder Tube And Flange (CT&F) assembly Serial No A8478. Liquid penetrant (PT) examination results acceptable.
3) Performed VT-3 visual examination on the existing ring flange cap screws. VT-3 visual examination results acceptable.
4) Performed VT-3 visual examination on the existing piston tube nut Serial No 2521. VT-3 visual examination results acceptable.
5) Reinstalled existing Piston Tube (PT) assembly Serial No 5518.
6) Reinstalled existing ring flange Serial No 1927.
7) Reinstalled VT-3 visually examined existing piston tube nut Serial No 2521.
8) Reinstalled VT-3 visually examined existing ring flange cap screws.

NOTES -

1) ASME Section III Code Cases are as listed on the N-2 Code Data Report for the Control Rod Drive (CRD) assembly Serial No A8478.
2) ASME pressure boundary (retaining) parts and materials such as Cylinder Tube And Flange (CT&F) assembly, Piston Tube (PT) assembly, ring flange, ring flange cap screws and piston tube nut were not replaced during CRD overhaul activities.
3) The Control Rod Drive (CRD) assembly Serial No A8478 is certified to comply with ASME Section III, Code Class 1, 1974 Edition with Winter 1975 Addenda.
4) The entire Control Rod Drive (CRD) assembly is identified by the Cylinder Tube And Flange (CT&F) Serial No A8478.

WOT No 01062290 11

ENERGY NORTHWEST
People·Vision·Solutions

FORM NIS-2 OWNER'S REPORT FOR REPAIRS OR REPLACEMENTS (Back)

8 Tests Conducted: Hydrostatic [ ] Pneumatic [ ] Nominal Operating Pressure [ ] None [X]
Test Pressure: Psig Test Temperature: °F
Component Design Pressure: Psig Temperature: °F

9. Remarks (Applicable Manufacturer's Data Reports to be attached): None

CERTIFICATE OF COMPLIANCE

We certify that the statements made in this Owner's Report are correct and this replacement conforms to the rules of the ASME Code, Section XI.
Type Code Symbol Stamp: Not Applicable
Certificate Of Authorization No.: Not Applicable
Expiration Date: Not Applicable

Prepared By Kuldip Singh - Program Lead Engineer (PLE) Signed By Kuldip Singh - Program Lead Engineer (PLE)

Date 1/10/05 Date 1/10/05

CERTIFICATE OF INSERVICE INSPECTION

I, the undersigned, holding a valid commission issued by the National Board of Boiler and Pressure Vessel Inspectors and the State of Washington and employed by Hartford Steam Boiler Of Connecticut of Hartford, Connecticut have inspected the components described in this Owner's Report during the period 7/26/2004 to 3/16/2005 and state to the best of my knowledge and belief, the Owner has performed examinations and taken corrective measures described in this Owner's Report in accordance with the requirements of the ASME Code, Section XI.
By signing this certificate neither the Inspector nor his employer makes any warranty, expressed or implied, concerning the examinations and corrective measures described in this Owner's Report. Furthermore, neither the Inspector nor his employer shall be liable in any manner for any personal injury or property damage or a loss of any kind arising from or connected with this inspection.

Inspector's Signature Commissions 10655W A, B, N, I
National Board, State, and Endorsements

Date 3/16/2005

WOT No 01062290 12

ENERGY NORTHWEST
People·Vision·Solutions

FORM NIS-2 OWNER'S REPORT FOR REPAIRS OR REPLACEMENTS
As Required By The Provisions Of The ASME Code Section XI

Date: 01/04/05
Sheet: 1 Of 1
Unit: Not Applicable

1. **Owner:** Energy Northwest
   Address: Columbia Generating Station, North Power Plant Loop, Richland, Washington, 99352
2. **Plant:** Columbia Generating Station
   Address: Columbia Generating Station, North Power Plant Loop, Richland, Washington, 99352
3. (a) **Work Performed By:** Energy Northwest
   (b) **Repair Organization P.O. No, Job No, etc.:** Energy Northwest
   (c) **Type Code Symbol Stamp:** Not Applicable
   (d) **Certificate Of Authorization No.:** Not Applicable
   (e) **Expiration Date:** Not Applicable
4. **Identification Of System:** Control Rod Drive (CRD)
5. (a) **Applicable Construction Code:** ASME Section III, Code Class 1 - See Notes For Code Edition, Addenda And Code Cases
   (b) **Applicable Edition Of ASME Section XI Utilized For Repairs Or Replacements:** 1989 Edition with no Addenda, Code Case: None
6. **Identification Of Components Repaired Or Replaced And Replacement Components**

Name Of Component	Name Of Manufacturer	Manufacturer's Serial No	National Board No	Other I.D.	Year Built	Repaired, Replaced Or Replacement	ASME Code Stamped (Yes Or No) Code Class
CRD	General Electric	A8668	N/A	N/A	1988	----------	Yes, Code Class 1

7. **Description Of Work Performed:** Overhauled Control Rod Drive (CRD) assembly Serial No A8668. The overhaul work was performed in accordance with plant procedure PPM No 10.5.4 "Control Rod Drive Overhaul" as follows:
   1) Disassembled Control Rod Drive (CRD) assembly for overhaul.
   2) Performed liquid penetrant (PT) examination on the existing Cylinder Tube And Flange (CT&F) assembly Serial No A8668. Liquid penetrant (PT) examination results acceptable.
   3) Performed VT-3 visual examination on the existing ring flange cap screws. VT-3 visual examination results acceptable.
   4) Performed VT-3 visual examination on the existing piston tube nut Serial No 2559. VT-3 visual examination results acceptable.
   5) Reinstalled existing Piston Tube (PT) assembly Serial No 5861.
   6) Reinstalled existing ring flange Serial No 2468.
   7) Reinstalled VT-3 visually examined existing piston tube nut Serial No 2559.
   8) Reinstalled VT-3 visually examined existing ring flange cap screws.

NOTES -

1) ASME Section III Code Cases are as listed on the N-2 Code Data Report for the Control Rod Drive (CRD) assembly Serial No A8668.
2) ASME pressure boundary (retaining) parts and materials such as Cylinder Tube And Flange (CT&F) assembly, Piston Tube (PT) assembly, ring flange, ring flange cap screws and piston tube nut were not replaced during CRD overhaul activities.
3) The Control Rod Drive (CRD) assembly Serial No A8668 is certified to comply with ASME Section III, Code Class 1, 1974 Edition with Winter 1975 Addenda.
4) The entire Control Rod Drive (CRD) assembly is identified by the Cylinder Tube And Flange (CT&F) Serial No A8668.

WOT No 01062290 12

ENERGY NORTHWEST
People·Vision·Solutions

FORM NIS-2 OWNER'S REPORT FOR REPAIRS OR REPLACEMENTS (Back)

8 Tests Conducted: Hydrostatic [ ] Pneumatic [ ] Nominal Operating Pressure [ ] None [X]
Test Pressure: Psig Test Temperature: °F
Component Design Pressure: Psig Temperature: °F

9. Remarks (Applicable Manufacturer's Data Reports to be attached): None

CERTIFICATE OF COMPLIANCE

We certify that the statements made in this Owner's Report are correct and this replacement *conforms to the rules of the ASME Code, Section XI.*
Type Code Symbol Stamp: Not Applicable
Certificate Of Authorization No.: Not Applicable
Expiration Date: Not Applicable

Prepared By Kuldip Singh - Program Lead Engineer (PLE) *Signed By* Kuldip Singh - Program Lead Engineer (PLE)

Date 1/10/05 *Date* 1/10/05

CERTIFICATE OF INSERVICE INSPECTION

I, the undersigned, holding a valid commission issued by the National Board of Boiler and Pressure Vessel Inspectors and the State of Washington *and employed by* Hartford Steam Boiler Of Connecticut of Hartford, Connecticut *have inspected the components described in this Owner's Report during the period* 7/26/2004 *to* 4/7/2005 *and state to the best of my knowledge and belief, the Owner has performed examinations and taken corrective measures described in this Owner's Report in accordance with the requirements of the ASME Code, Section XI.*
By signing this certificate neither the Inspector nor his employer makes any warranty, expressed or implied, concerning the examinations and corrective measures described in this Owner's Report. Furthermore, neither the Inspector nor his employer shall be liable in any manner for any personal injury or property damage or a loss of any kind arising from or connected with this inspection.

Inspector's Signature *Commissions* 10165SWA A, B, N, I
National Board, State, and Endorsements

Date 4/7/2005

WOT No 01062290 13

ENERGY NORTHWEST
People·Vision·Solutions

FORM NIS-2 OWNER'S REPORT FOR REPAIRS OR REPLACEMENTS
As Required By The Provisions Of The ASME Code Section XI

Date: 03/21/05
Sheet: 1 Of 1
Unit: Not Applicable

1. **Owner:** Energy Northwest
   Address: Columbia Generating Station, North Power Plant Loop, Richland, Washington, 99352
2. **Plant:** Columbia Generating Station
   Address: Columbia Generating Station, North Power Plant Loop, Richland, Washington, 99352
3. **(a) Work Performed By:** Energy Northwest
   (b) Repair Organization P.O. No, Job No, etc.: Energy Northwest
   (c) Type Code Symbol Stamp: Not Applicable
   (d) Certificate Of Authorization No.: Not Applicable
   (e) Expiration Date: Not Applicable
4. **Identification Of System:** Control Rod Drive (CRD)
5. **(a) Applicable Construction Code:** ASME Section III, Code Class 1 - See Notes For Code Edition, Addenda And Code Cases
   (b) Applicable Edition Of ASME Section XI Utilized For Repairs Or Replacements: 1989 Edition with no Addenda, Code Case: None
6. **Identification Of Components Repaired Or Replaced And Replacement Components**

Name Of Component	Name Of Manufacturer	Manufacturer's Serial No	National Board No	Other I.D.	Year Built	Repaired, Replaced Or Replacement	ASME Code Stamped (Yes Or No) Code Class
CRD	General Electric	A8721	N/A	N/A	1988	----------	Yes, Code Class 1

7. **Description Of Work Performed:** Overhauled Control Rod Drive (CRD) assembly Serial No A8721. The overhaul work was performed in accordance with plant procedure PPM No 10.5.4 "Control Rod Drive Overhaul" as follows:
   1) Disassembled Control Rod Drive (CRD) assembly for overhaul.
   2) Performed liquid penetrant (PT) examination on the existing Cylinder Tube And Flange (CT&F) assembly Serial No A8721. Liquid penetrant (PT) examination results acceptable.
   3) Performed VT-3 visual examination on the existing ring flange cap screws. VT-3 visual examination results acceptable.
   4) Performed VT-3 visual examination on the existing piston tube nut Serial No 3096. VT-3 visual examination results acceptable.
   5) Reinstalled existing Piston Tube (PT) assembly Serial No 5241.
   6) Reinstalled existing ring flange Serial No 2598.
   7) Reinstalled VT-3 visually examined existing piston tube nut Serial No 3096.
   8) Reinstalled VT-3 visually examined existing ring flange cap screws.

NOTES
1) ASME Section III Code Cases are as listed on the N-2 Code Data Report for the Control Rod Drive (CRD) assembly Serial No A8721.
2) ASME pressure boundary (retaining) parts and materials such as Cylinder Tube And Flange (CT&F) assembly, Piston Tube (PT) assembly, ring flange, ring flange cap screws and piston tube nut were not replaced during CRD overhaul activities.
3) The Control Rod Drive (CRD) assembly Serial No A8721 is certified to comply with ASME Section III, Code Class 1, 1974 Edition with Winter 1975 Addenda.
4) The entire Control Rod Drive (CRD) assembly is identified by the Cylinder Tube And Flange (CT&F) Serial No A8721.

WOT No 01062290 13

ENERGY NORTHWEST
People·Vision·Solutions

FORM NIS-2 OWNER'S REPORT FOR REPAIRS OR REPLACEMENTS (Back)

8 Tests Conducted: Hydrostatic [ ] Pneumatic [ ] Nominal Operating Pressure [ ] None [X]
Test Pressure: Psig
Component Design Pressure: Psig
Test Temperature: °F
Temperature: °F

9. Remarks (Applicable Manufacturer's Data Reports to be attached): None

CERTIFICATE OF COMPLIANCE

We certify that the statements made in this Owner's Report are correct and this replacement conforms to the rules of the ASME Code, Section XI.
Type Code Symbol Stamp: Not Applicable
Certificate Of Authorization No.: Not Applicable
Expiration Date: Not Applicable

Prepared By Kuldip Singh - Program Lead Engineer (PLE) Signed By Kuldip Singh - Program Lead Engineer (PLE)

Date 3/21/05 Date 3/21/05

CERTIFICATE OF INSERVICE INSPECTION

I, the undersigned, holding a valid commission issued by the National Board of Boiler and Pressure Vessel Inspectors and the State of Washington and employed by Hartford Steam Boiler Of Connecticut of Hartford, Connecticut have inspected the components described in this Owner's Report during the period 7/26/2004 to 3/22/2005 and state to the best of my knowledge and belief, the Owner has performed examinations and taken corrective measures described in this Owner's Report in accordance with the requirements of the ASME Code, Section XI.
By signing this certificate neither the Inspector nor his employer makes any warranty, expressed or implied, concerning the examinations and corrective measures described in this Owner's Report. Furthermore, neither the Inspector nor his employer shall be liable in any manner for any personal injury or property damage or a loss of any kind arising from or connected with this inspection.

Inspector's Signature Commissions 1065547 A,B,N,I
National Board, State, and Endorsements

Date 3/22/2005

WOT No 01062290 14

ENERGY NORTHWEST
People·Vision·Solutions

FORM NIS-2 OWNER'S REPORT FOR REPAIRS OR REPLACEMENTS
As Required By The Provisions Of The ASME Code Section XI

1. Owner: Energy Northwest
Address: Columbia Generating Station, North Power Plant Loop, Richland, Washington, 99352
2. Plant: Columbia Generating Station
Address: Columbia Generating Station, North Power Plant Loop, Richland, Washington, 99352

Date: 01/04/05
Sheet: 1 Of 1
Unit: Not Applicable

3. (a) Work Performed By: Energy Northwest
(b) Repair Organization P.O. No, Job No, etc.: Energy Northwest
(c) Type Code Symbol Stamp: Not Applicable
(d) Certificate Of Authorization No.: Not Applicable
(e) Expiration Date: Not Applicable
4. Identification Of System: Control Rod Drive (CRD)
5. (a) Applicable Construction Code: ASME Section III, Code Class 1 - See Notes For Code Edition, Addenda And Code Cases
(b) Applicable Edition Of ASME Section XI Utilized For Repairs Or Replacements: 1989 Edition with no Addenda, Code Case: None
6. Identification Of Components Repaired Or Replaced And Replacement Components

Name Of Component	Name Of Manufacturer	Manufacturer's Serial No	National Board No	Other I.D.	Year Built	Repaired, Replaced Or Replacement	ASME Code Stamped (Yes Or No) Code Class
CRD	General Electric	6456	N/A	N/A	1974	----------	Yes, Code Class 1
CT&F	General Electric	6456	N/A	N/A	1974	Replaced	Yes, Code Class 1
CT&F	General Electric	A9330	N/A	N/A	1995	Replacement	Yes, Code Class 1

7. Description Of Work Performed: Overhauled Control Rod Drive (CRD) assembly Serial No 6456. The overhaul work was performed in accordance with plant procedure PPM No 10.5.4 "Control Rod Drive Overhaul" as follows:

1) Disassembled Control Rod Drive (CRD) assembly for overhaul.
2) Performed liquid penetrant (PT) examination on the existing Cylinder Tube And Flange (CT&F) assembly Serial No 6456. Liquid penetrant (PT) examination results unacceptable.
3) Performed VT-3 visual examination on the existing ring flange cap screws. VT-3 visual examination results acceptable.
4) Performed VT-3 visual examination on the existing piston tube nut Serial No 2476. VT-3 visual examination results acceptable.
5) Installed replacement Cylinder Tube And Flange (CT&F) assembly Serial No A9330.
6) Reinstalled existing Piston Tube (PT) assembly Serial No 5343.
7) Reinstalled existing ring flange Serial No 1952.
8) Reinstalled VT-3 visually examined existing piston tube nut Serial No 2476.
9) Reinstalled VT-3 visually examined existing ring flange cap screws.

NOTES -

1) ASME Section III Code Cases are as listed on the N-2 Code Data Report for the Control Rod Drive (CRD) assembly Serial No A9330.
2) The existing Cylinder Tube And Flange (CT&F) assembly Serial No 6456 is certified to comply with ASME Section III, Code Class 1, 1971 Edition with no Addenda.
3) ASME pressure boundary (retaining) parts and materials such as Piston Tube (PT) assembly, ring flange, ring flange cap screws and piston tube nut were reused during CRD overhaul activities with the exception of Cylinder Tube And Flange (CT&F) assembly which was replaced.
4) The replacement Cylinder Tube And Flange (CT&F) assembly Serial No A9330 is certified to comply with ASME Section III, Code Class 1, 1974 Edition with Winter 1975 Addenda.
5) The entire Control Rod Drive (CRD) assembly is identified by the Cylinder Tube And Flange (CT&F) Serial No A9330.

WOT No 01062290 14

ENERGY NORTHWEST
People·Vision·Solutions

FORM NIS-2 OWNER'S REPORT FOR REPAIRS OR REPLACEMENTS (Back)

8 Tests Conducted: Hydrostatic [ ] Pneumatic [ ] Nominal Operating Pressure [ ] None [X]
Test Pressure: Psig
Component Design Pressure: Psig
Test Temperature: °F
Temperature: °F

9. Remarks (Applicable Manufacturer's Data Reports to be attached): See attached N-2 Code Data Report for the replacement Cylinder Tube And Flange (CT&F) assembly Serial No A9330.

CERTIFICATE OF COMPLIANCE

We certify that the statements made in this Owner's Report are correct and this replacement conforms to the rules of the ASME Code, Section XI.
Type Code Symbol Stamp: Not Applicable
Certificate Of Authorization No.: Not Applicable
Expiration Date: Not Applicable

Prepared By Kuldip Singh - Program Lead Engineer (PLE) Signed By Kuldip Singh - Program Lead Engineer (PLE)

Date 1/10/05 Date 1/10/05

CERTIFICATE OF INSERVICE INSPECTION

I, the undersigned, holding a valid commission issued by the National Board of Boiler and Pressure Vessel Inspectors and the State of Washington and employed by Hartford Steam Boiler Of Connecticut of Hartford, Connecticut have inspected the components described in this Owner's Report during the period 7/26/2004 to 3/16/2005 and state to the best of my knowledge and belief, the Owner has performed examinations and taken corrective measures described in this Owner's Report in accordance with the requirements of the ASME Code, Section XI.
By signing this certificate neither the Inspector nor his employer makes any warranty, expressed or implied, concerning the examinations and corrective measures described in this Owner's Report. Furthermore, neither the Inspector nor his employer shall be liable in any manner for any personal injury or property damage or a loss of any kind arising from or connected with this inspection.

Inspector's Signature Commissions 10655 A, B, N, I
National Board, State, and Endorsements

Date 3/16/2005

WOT No. 01 062290 14

FORM N-2 NPT CERTIFICATE HOLDERS' DATA REPORT FOR NUCLEAR PART AND APPURTENANCES*

As required by the Provision of the ASME Code Rules, Section III, Div. I

1. Manufactured & Certified by : General Electric Company Nuclear Fuel & Components Manufacturing (GE NF & CM)

   2117 Castle Hayne Road, Wilmington, North Carolina 28401

   (Name and Address of NPT Certificate Holder)

   (b) Manufactured for : WNP 2 Richland, Washington 99352

   (Name and Address of N Certificate Holder for completed nuclear component)

2. Identification - Certificate Holder's S/N of Part : A9330 Nat'l Bd. No. N/A

   (a) Constructed According to Drawing No: 919D258G003 Rev 18 Dwg. Prepared by D. L. Peterson

   (b) Description of Part Inspected: Cylinder Tube & Flange

   (c) Applicable ASME Code: Section III , Edition 1974 , Addenda Date W'75 , Case No. 1361-2 Class 1

3. REMARKS: Standard part for use with Reactor. Hydrostatically tested at 1825 psi. min.

   (Brief description of service for which component was designed)

Sheet 1 of 2

We certify that the statements in this report are correct and this vessel part or appurtenance as defined in the code conforms to the rules of construction of the ASME Code Section III. (The applicable Designed Specification and Stress Report are not the responsibility of the NPT Certificate Holder for parts. An NPT Certification Holder for appurtenances is responsible for furnishing a separate Design Specification and Stress Report if the appurtenance is not included in the component Design Specification and Stress Report).

Date: 06/27/95 Signed GE - NEBG - NF & CM - QA By

(NPT Certificate Holder) (ASC QA Representive)

Certificate of Authorization Expires: 6/16/96 Certification of Authorization No. : NPT N - 1151

Certification of Design for Appurtenance

Design information on file at GE Company, San Jose, California

Stress analysis report on file at GE Company, San Jose, California

DC22A6253 Rev. 1
Design specification certified by Bjorn Haaberg Prof. Eng. State Calif. Reg. No. 15570

DC22A6254 Rev 1
Stress analysis report certified by Edward Yoshio Prof. Eng. State Calif. Reg. No. M018646

Certification of Shop Inspection

I, the undersigned, holding a valid commission by the National Board of Boiler and Pressure Inspectors and/or the State or Province of North Carolina and employed by Department of Labor of State of North Carolina have inspected the part of a pressure vessel described in this Partial Data Report on 6/27, 1995, and state that to the best of my knowledge and belief, the NPT Certificate Holder has constructed this part in accordance with the ASME Code Section III.

By signing this certificate, neither the Inspector nor his employer makes any warranty, expressed or implied, concerning the part described in the Partial Data Report. Furthermore, neither the Inspector nor his employer shall be liable in any manner for any personal injury or property damages or a loss of any kind arising from or connected with this inspection.

6/27, 1995	Jerome P Ewers	NC 1231, Ohio, WC 3686 PA
Date	Inspector's Signature	National Board, State, Province And No.

*Supplemental sheets in form of lists, sketches or drawing may be used provided (1) size is 8-1/2" x 11", (2) information in 1-2 on this Data Report is included on each sheet, and (3) each sheet is numbered and number of sheets is recorded in Item 3. "REMARKS".

(07/94)

FORM N-2 (back)

Items 4-8 Incl. to be completed for single wall vessels, jackets vessels, or shells of heat exchangers.

4. Shell: Material _____ T.S. _____ Nominal Thickness ____ in. Corrosion Allowance ____ in. Dia. ____ ft. ____ in. Length ____ ft. ____
(Kind & Spec. No.) (Min. of Range Specified)

5. Seams: Long _____ H.T.[1] _____ R.T. _____ Efficiency _____%

Girth _____ H.T.[1] _____ R.T. _____ No. of Courses _____

6. Heads: (a) Material _____ T.S. _____ (b) Material _____ T.S. _____

	Location (Top Bottom, Ends)	Thickness	Crown Radius	Knuckle Radius	Elliptical Ratio	Concial Apex Angle	Hemispherical Radius	Flat Diameter	Side to Press. (conv. or conc.)
(a)									
(b)									

If removable, bolts used _____ (Material, Spec. No., T.S. Size Number) Other fastening _____ (Describe or attach sketch)

7. Jacket Closure: _____
(Describe as ogee and weld, bar, etc. If bar give dimensions, if bolts, describe or sketch)

Drop Weight _____
Charpy Impact _____ ft-lb

8. Design pressure[2] _____1250_____ psi at _____575_____ °F at temp of _____ °F

Items 9 and 10 to be completed for tube sections

9. Tube Sheets: Stationary. Material _____ (Kind & Spec. No.) Dia. _____ (Subject to pressure) Thickness ____ in. Attachment _____ (Welded, Bolted)

Floating. Material _____ Dia. _____ Thickness ____ in. Attachment _____

10. Tubes: Material _____ O.D. _____ in. Thickness _____ inches or gage. Number _____ Type _____ (Str. or U)

Items 11 - 14 incl. to be completed for inner chambers of jacketed vessels, or channels of heat exchangers.

11. Shell: Material _____ T.S. _____ Nominal Thickness ____ in. Corrosion Allowance ____ in. Dia. ____ ft. ____ in. Length ____ ft. ____ in
(Kind & Spec. No.) (Min. of Range Specified)

12. Seams: Long _____ H.T.[1] _____ R.T. _____ Efficiency _____%

Girth _____ H.T.[1] _____ R.T. _____ No. of Courses _____

13. Heads: (a) Material _____ T.S. _____ (b) Material _____ T.S. _____

	Location	Thickness	Crown Radius	Knuckle Radius	Elliptical Ratio	Concial Apex Angle	Hemispherical Radius	Flat Diameter	Side to Press. (conv. or conc.)
(a)	Top, bottom, ends								
(b)	Channel								

If removable, bolts used (a)_____ (b)_____ (c)_____ Other fastening _____ (Describe or attach sketch)

Drop Weight _____
Charpy Impact _____ ft-lb

14. Design pressure[2] _____ psi at _____ °F at temp of _____ °F

Items below to be completed for all vessels where applicable.

15. Safety Valve Outlets: Number _____ Size _____ Location _____

16. Nozzles:

Purpose (Inlet, Outlet, Drain)	Number	Dia. or Size	Type	Material	Thickness	Reinforcement Material	How Attached

17. Inspection Openings: Manholes, No. _____ Size _____ Location _____
Handholes, No. _____ Size _____ Location _____
Threaded, No. _____ Size _____ Location _____

18. Supports: Skirt _____ (Yes or No) Lugs _____ (Number) Legs _____ (Number) Other _____ (Describe) Attached _____ (Where & How)

1 - If Postweld Heat-Treated.
2 - List other internal or external pressure with coincident temperature when applicable.

WO7 No. 01062240 14

FORM N-2 NPT CERTIFICATE HOLDERS' DATA REPORT FOR NUCLEAR PART AND APPURTENANCES*

As required by the Provision of the ASME Code Rules, Section III, Div. I

Manufactured & Certified by : General Electric Company Nuclear Fuel & Components Manufacturing (GE NF & CM)

2117 Castle Hayne Road, Wilmington, North Carolina 28401

(Name and Address of NPT Certificate Holder)

(b) Manufactured for : WNP 2 Richland, Washington 99352

(Name and Address of N Certificate Holder for completed nuclear component)

2. Identification - Certificate Holder's S/N of Part : A9330 Nat'l Bd. No. N/A

(a) Constructed According to Drawing No: 919D258G003 Rev 18 Dwg. Prepared by D. L. Peterson

(b) Description of Part Inspected: Cylinder Tube & Flange

(c) Applicable ASME Code: Section III , Edition 1974 , Addenda Date W'75 , Case No. 1361-2 Class 1

3. REMARKS: Standard part for use with Reactor. Hydrostatically tested at 1825 psi. min.

(Brief description of service for which component was designed)

1. Cap 166B9274P001
   SA182 - F316
   3/8" thick x 1 1/16" OD

2. Indicator Tube 167B4908P001
   SA312 - TP316
   3/4" sch 40 - seamless pipe
   0.113" wall thickness
   1.065" max. dia.

3. Plug 159A1176P001
   SA182 - F304
   1/4" thick x 0.812" OD

4. Flange 919D610P001 (719E474)
   SA182 - F304
   3.37" thick x 9 5/8" OD

5. Head 129B3539P005
   SA182 - F304
   7/8" thick x 2.875" dia.

6. Ring Flange 114B5122P002
   SA182 - F304
   1" thick x 5.0" OD x 1.75" ID

7. Cap Screw 117C4516P002
   SA193 - B6
   6 ea. 1/2" dia. on 4 1/8" bolt circle

8. Plug 175A7961P001
   SA182 - F304
   0.38" thick x 1.307" dia.

9. Nut 114B5460P001
   XM - 19 SA479
   1.30" thick x 2.62" dia.

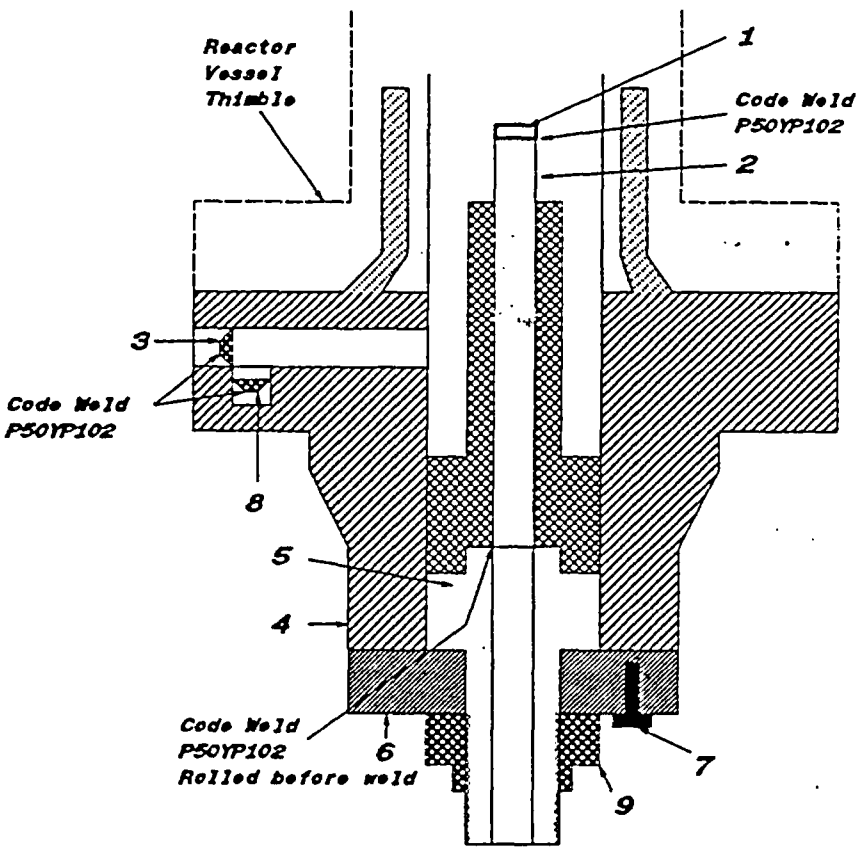

WOT No 01062290 15

ENERGY NORTHWEST
People·Vision·Solutions

FORM NIS-2 OWNER'S REPORT FOR REPAIRS OR REPLACEMENTS
As Required By The Provisions Of The ASME Code Section XI

Date: 01/04/05
Sheet: 1 Of 1
Unit: Not Applicable

1. **Owner:** Energy Northwest
   Address: Columbia Generating Station, North Power Plant Loop, Richland, Washington, 99352
2. **Plant:** Columbia Generating Station
   Address: Columbia Generating Station, North Power Plant Loop, Richland, Washington, 99352
3. (a) **Work Performed By:** Energy Northwest
   (b) **Repair Organization P.O. No, Job No, etc.:** Energy Northwest
   (c) **Type Code Symbol Stamp:** Not Applicable
   (d) **Certificate Of Authorization No.:** Not Applicable
   (e) **Expiration Date:** Not Applicable
4. **Identification Of System:** Control Rod Drive (CRD)
5. (a) **Applicable Construction Code:** ASME Section III, Code Class 1 - See Notes For Code Edition, Addenda And Code Cases
   (b) **Applicable Edition Of ASME Section XI Utilized For Repairs Or Replacements:** 1989 Edition with no Addenda, Code Case: None
6. **Identification Of Components Repaired Or Replaced And Replacement Components**

Name Of Component	Name Of Manufacturer	Manufacturer's Serial No	National Board No	Other I.D.	Year Built	Repaired, Replaced Or Replacement	ASME Code Stamped (Yes Or No) Code Class
CRD	General Electric	6389	N/A	N/A	1974	----------	Yes, Code Class 1

7. **Description Of Work Performed:** Overhauled Control Rod Drive (CRD) assembly Serial No 6389. The overhaul work was performed in accordance with plant procedure PPM No 10.5.4 "Control Rod Drive Overhaul" as follows:
   1) Disassembled Control Rod Drive (CRD) assembly for overhaul.
   2) Performed liquid penetrant (PT) examination on the existing Cylinder Tube And Flange (CT&F) assembly Serial No 6389. Liquid penetrant (PT) examination results acceptable.
   3) Performed VT-3 visual examination on the existing ring flange cap screws. VT-3 visual examination results acceptable.
   4) Performed VT-3 visual examination on the existing piston tube nut Serial No 2324. VT-3 visual examination results acceptable.
   5) Reinstalled existing Piston Tube (PT) assembly Serial No 5354.
   6) Reinstalled existing ring flange Serial No 2091.
   7) Reinstalled VT-3 visually examined existing piston tube nut Serial No 2324.
   8) Reinstalled VT-3 visually examined existing ring flange cap screws.

NOTES -

1) ASME Section III Code Cases are as listed on the N-2 Code Data Report for the Control Rod Drive (CRD) assembly Serial No 6389.
2) ASME pressure boundary (retaining) parts and materials such as Cylinder Tube And Flange (CT&F) assembly, Piston Tube (PT) assembly, ring flange, ring flange cap screws and piston tube nut were not replaced during CRD overhaul activities.
3) The Control Rod Drive (CRD) assembly Serial No 6389 is certified to comply with ASME Section III, Code Class 1, 1971 Edition with no Addenda.
4) The entire Control Rod Drive (CRD) assembly is identified by the Cylinder Tube And Flange (CT&F) Serial No 6389.

WOT No 01062290 15

ENERGY NORTHWEST
People·Vision·Solutions

FORM NIS-2 OWNER'S REPORT FOR REPAIRS OR REPLACEMENTS (Back)

8 Tests Conducted: Hydrostatic [ ] Pneumatic [ ] Nominal Operating Pressure [ ] None [X]
Test Pressure: Psig Test Temperature: °F
Component Design Pressure: Psig Temperature: °F

9. Remarks (Applicable Manufacturer's Data Reports to be attached): None

CERTIFICATE OF COMPLIANCE

We certify that the statements made in this Owner's Report are correct and this replacement conforms to the rules of the ASME Code, Section XI.
Type Code Symbol Stamp: Not Applicable
Certificate Of Authorization No.: Not Applicable
Expiration Date: Not Applicable

Prepared By Kuldip Singh - Program Lead Engineer (PLE) Signed By Kuldip Singh - Program Lead Engineer (PLE)

Date 1/10/05 Date 1/10/05

CERTIFICATE OF INSERVICE INSPECTION

I, the undersigned, holding a valid commission issued by the National Board of Boiler and Pressure Vessel Inspectors and the State of Washington and employed by Hartford Steam Boiler Of Connecticut of Hartford, Connecticut have inspected the components described in this Owner's Report during the period 7/26/2004 to 3/16/2005 and state to the best of my knowledge and belief, the Owner has performed examinations and taken corrective measures described in this Owner's Report in accordance with the requirements of the ASME Code, Section XI.
By signing this certificate neither the Inspector nor his employer makes any warranty, expressed or implied, concerning the examinations and corrective measures described in this Owner's Report. Furthermore, neither the Inspector nor his employer shall be liable in any manner for any personal injury or property damage or a loss of any kind arising from or connected with this inspection.

Inspector's Signature Commissions 10655 A, B, N, I
National Board, State, and Endorsements

Date 3/16/2005

WOT No 01062290 16

ENERGY NORTHWEST
People·Vision·Solutions

FORM NIS-2 OWNER'S REPORT FOR REPAIRS OR REPLACEMENTS
As Required By The Provisions Of The ASME Code Section XI

Date: 01/04/05
Sheet: 1 Of 1
Unit: Not Applicable

1. **Owner:** Energy Northwest
   Address: Columbia Generating Station, North Power Plant Loop, Richland, Washington, 99352
2. **Plant:** Columbia Generating Station
   Address: Columbia Generating Station, North Power Plant Loop, Richland, Washington, 99352
3. (a) **Work Performed By:** Energy Northwest
   (b) **Repair Organization P.O. No, Job No, etc.:** Energy Northwest
   (c) **Type Code Symbol Stamp:** Not Applicable
   (d) **Certificate Of Authorization No.:** Not Applicable
   (e) **Expiration Date:** Not Applicable
4. **Identification Of System:** Control Rod Drive (CRD)
5. (a) **Applicable Construction Code:** ASME Section III, Code Class 1 - See Notes For Code Edition, Addenda And Code Cases
   (b) **Applicable Edition Of ASME Section XI Utilized For Repairs Or Replacements:** 1989 Edition with no Addenda, Code Case: None
6. **Identification Of Components Repaired Or Replaced And Replacement Components**

Name Of Component	Name Of Manufacturer	Manufacturer's Serial No	National Board No	Other I.D.	Year Built	Repaired, Replaced Or Replacement	ASME Code Stamped (Yes Or No) Code Class
CRD	General Electric	A8713	N/A	N/A	1988	----------	Yes, Code Class 1

7. **Description Of Work Performed:** Overhauled Control Rod Drive (CRD) assembly Serial No A8713. The overhaul work was performed in accordance with plant procedure PPM No 10.5.4 "Control Rod Drive Overhaul" as follows:
   1) Disassembled Control Rod Drive (CRD) assembly for overhaul.
   2) Performed liquid penetrant (PT) examination on the existing Cylinder Tube And Flange (CT&F) assembly Serial No A8713. Liquid penetrant (PT) examination results acceptable.
   3) Performed VT-3 visual examination on the existing ring flange cap screws. VT-3 visual examination results acceptable.
   4) Performed VT-3 visual examination on the existing piston tube nut Serial No 2863. VT-3 visual examination results acceptable.
   5) Reinstalled existing Piston Tube (PT) assembly Serial No 5760.
   6) Reinstalled existing ring flange Serial No 2382.
   7) Reinstalled VT-3 visually examined existing piston tube nut Serial No 2863.
   8) Reinstalled VT-3 visually examined existing ring flange cap screws.

NOTES -

1) ASME Section III Code Cases are as listed on the N-2 Code Data Report for the Control Rod Drive (CRD) assembly Serial No A8713.
2) ASME pressure boundary (retaining) parts and materials such as Cylinder Tube And Flange (CT&F) assembly, Piston Tube (PT) assembly, ring flange, ring flange cap screws and piston tube nut were not replaced during CRD overhaul activities.
3) The Control Rod Drive (CRD) assembly Serial No A8713 is certified to comply with ASME Section III, Code Class 1, 1974 Edition with Winter 1975 Addenda.
4) The entire Control Rod Drive (CRD) assembly is identified by the Cylinder Tube And Flange (CT&F) Serial No A8713.

WOT No 01062290 16

ENERGY NORTHWEST
People·Vision·Solutions

FORM NIS-2 OWNER'S REPORT FOR REPAIRS OR REPLACEMENTS (Back)

8 Tests Conducted: Hydrostatic [ ] Pneumatic [ ] Nominal Operating Pressure [ ] None [X]
Test Pressure: Psig
Component Design Pressure: Psig
Test Temperature: °F
Temperature: °F

9. Remarks (Applicable Manufacturer's Data Reports to be attached): None

CERTIFICATE OF COMPLIANCE

We certify that the statements made in this Owner's Report are correct and this replacement conforms to the rules of the ASME Code, Section XI.
Type Code Symbol Stamp: Not Applicable
Certificate Of Authorization No.: Not Applicable
Expiration Date: Not Applicable

Prepared By Kuldip Singh - Program Lead Engineer (PLE) Signed By Kuldip Singh - Program Lead Engineer (PLE)

Date 1/11/05 Date 1/11/05

CERTIFICATE OF INSERVICE INSPECTION

I, the undersigned, holding a valid commission issued by the National Board of Boiler and Pressure Vessel Inspectors and the State of Washington and employed by Hartford Steam Boiler Of Connecticut of Hartford, Connecticut have inspected the components described in this Owner's Report during the period 7/26/2004 to 3/16/2005 and state to the best of my knowledge and belief, the Owner has performed examinations and taken corrective measures described in this Owner's Report in accordance with the requirements of the ASME Code, Section XI.
By signing this certificate neither the Inspector nor his employer makes any warranty, expressed or implied, concerning the examinations and corrective measures described in this Owner's Report. Furthermore, neither the Inspector nor his employer shall be liable in any manner for any personal injury or property damage or a loss of any kind arising from or connected with this inspection.

Inspector's Signature Commissions 10655W A,B,N,I
National Board, State, and Endorsements

Date 3/16/2005

WOT No 01062290 17

ENERGY NORTHWEST
People·Vision·Solutions

FORM NIS-2 OWNER'S REPORT FOR REPAIRS OR REPLACEMENTS
As Required By The Provisions Of The ASME Code Section XI

1. Owner: Energy Northwest
Address: Columbia Generating Station, North Power Plant Loop, Richland, Washington, 99352
2. Plant: Columbia Generating Station
Address: Columbia Generating Station, North Power Plant Loop, Richland, Washington, 99352

Date: 01/04/05
Sheet: 1 Of 1
Unit: Not Applicable

3. (a) Work Performed By: Energy Northwest
(b) Repair Organization P.O. No, Job No, etc.: Energy Northwest
(c) Type Code Symbol Stamp: Not Applicable
(d) Certificate Of Authorization No.: Not Applicable
(e) Expiration Date: Not Applicable
4. Identification Of System: Control Rod Drive (CRD)
5. (a) Applicable Construction Code: ASME Section III, Code Class 1 - See Notes For Code Edition, Addenda And Code Cases
(b) Applicable Edition Of ASME Section XI Utilized For Repairs Or Replacements: 1989 Edition with no Addenda, Code Case: None
6. Identification Of Components Repaired Or Replaced And Replacement Components

Name Of Component	Name Of Manufacturer	Manufacturer's Serial No	National Board No	Other I.D.	Year Built	Repaired, Replaced Or Replacement	ASME Code Stamped (Yes Or No) Code Class
CRD	General Electric	A8470	N/A	N/A	1988	----------	Yes, Code Class 1

7. Description Of Work Performed: Overhauled Control Rod Drive (CRD) assembly Serial No A8470. The overhaul work was performed in accordance with plant procedure PPM No 10.5.4 "Control Rod Drive Overhaul" as follows:

1) Disassembled Control Rod Drive (CRD) assembly for overhaul.
2) Performed liquid penetrant (PT) examination on the existing Cylinder Tube And Flange (CT&F) assembly Serial No A8470. Liquid penetrant (PT) examination results acceptable.
3) Performed VT-3 visual examination on the existing ring flange cap screws. VT-3 visual examination results acceptable.
4) Performed VT-3 visual examination on the existing piston tube nut Serial No 2721. VT-3 visual examination results acceptable.
5) Reinstalled existing Piston Tube (PT) assembly Serial No 5578.
6) Reinstalled existing ring flange Serial No 2227.
7) Reinstalled VT-3 visually examined existing piston tube nut Serial No 2721.
8) Reinstalled VT-3 visually examined existing ring flange cap screws.

NOTES -

1) ASME Section III Code Cases are as listed on the N-2 Code Data Report for the Control Rod Drive (CRD) assembly Serial No A8470.
2) ASME pressure boundary (retaining) parts and materials such as Cylinder Tube And Flange (CT&F) assembly, Piston Tube (PT) assembly, ring flange, ring flange cap screws and piston tube nut were not replaced during CRD overhaul activities.
3) The Control Rod Drive (CRD) assembly Serial No A8470 is certified to comply with ASME Section III, Code Class 1, 1974 Edition with Winter 1975 Addenda.
4) The entire Control Rod Drive (CRD) assembly is identified by the Cylinder Tube And Flange (CT&F) Serial No A8470.

WOT No 01062290 17

ENERGY NORTHWEST
People·Vision·Solutions

FORM NIS-2 OWNER'S REPORT FOR REPAIRS OR REPLACEMENTS (Back)

8 Tests Conducted: Hydrostatic [ ] Pneumatic [ ] Nominal Operating Pressure [ ] None [X]
Test Pressure: Psig Test Temperature: °F
Component Design Pressure: Psig Temperature: °F

9. Remarks (Applicable Manufacturer's Data Reports to be attached): None

CERTIFICATE OF COMPLIANCE

We certify that the statements made in this Owner's Report are correct and this replacement conforms to the rules of the ASME Code, Section XI.
Type Code Symbol Stamp: Not Applicable
Certificate Of Authorization No.: Not Applicable
Expiration Date: Not Applicable

Prepared By Kuldip Singh - Program Lead Engineer (PLE) Signed By Kuldip Singh - Program Lead Engineer (PLE)

Date 1/11/05 Date 1/11/05

CERTIFICATE OF INSERVICE INSPECTION

I, the undersigned, holding a valid commission issued by the National Board of Boiler and Pressure Vessel Inspectors and the State of Washington and employed by Hartford Steam Boiler Of Connecticut of Hartford, Connecticut have inspected the components described in this Owner's Report during the period 7/26/04 to 3/16/05 and state to the best of my knowledge and belief, the Owner has performed examinations and taken corrective measures described in this Owner's Report in accordance with the requirements of the ASME Code, Section XI.
By signing this certificate neither the Inspector nor his employer makes any warranty, expressed or implied, concerning the examinations and corrective measures described in this Owner's Report. Furthermore, neither the Inspector nor his employer shall be liable in any manner for any personal injury or property damage or a loss of any kind arising from or connected with this inspection.

Inspector's Signature Commissions 10165 WA, B, N, I
National Board, State, and Endorsements

Date 3/16/2005

WOT No 01062290 18

ENERGY NORTHWEST
People·Vision·Solutions

FORM NIS-2 OWNER'S REPORT FOR REPAIRS OR REPLACEMENTS
As Required By The Provisions Of The ASME Code Section XI

Date: 01/05/05
Sheet: 1 Of 1
Unit: Not Applicable

1. **Owner:** Energy Northwest
   Address: Columbia Generating Station, North Power Plant Loop, Richland, Washington, 99352
2. **Plant:** Columbia Generating Station
   Address: Columbia Generating Station, North Power Plant Loop, Richland, Washington, 99352
3. (a) **Work Performed By:** Energy Northwest
   (b) **Repair Organization P.O. No, Job No, etc.:** Energy Northwest
   (c) **Type Code Symbol Stamp:** Not Applicable
   (d) **Certificate Of Authorization No.:** Not Applicable
   (e) **Expiration Date:** Not Applicable
4. **Identification Of System:** Control Rod Drive (CRD)
5. (a) **Applicable Construction Code:** ASME Section III, Code Class 1 - See Notes For Code Edition, Addenda And Code Cases
   (b) **Applicable Edition Of ASME Section XI Utilized For Repairs Or Replacements:** 1989 Edition with no Addenda, Code Case: None
6. **Identification Of Components Repaired Or Replaced And Replacement Components**

Name Of Component	Name Of Manufacturer	Manufacturer's Serial No	National Board No	Other I.D.	Year Built	Repaired, Replaced Or Replacement	ASME Code Stamped (Yes Or No) Code Class
CRD	General Electric	7151	N/A	N/A	1975	----------	Yes, Code Class 1
CT&F	General Electric	7151	N/A	N/A	1975	Replaced	Yes, Code Class 1
CT&F	General Electric	A9414	N/A	N/A	1995	Replacement	Yes, Code Class 1

7. **Description Of Work Performed:** Overhauled Control Rod Drive (CRD) assembly Serial No 7151. The overhaul work was performed in accordance with plant procedure PPM No 10.5.4 "Control Rod Drive Overhaul" as follows:
   1) Disassembled Control Rod Drive (CRD) assembly for overhaul.
   2) Performed liquid penetrant (PT) examination on the existing Cylinder Tube And Flange (CT&F) assembly Serial No 7151. Liquid penetrant (PT) examination results unacceptable.
   3) Performed VT-3 visual examination on the existing ring flange cap screws. VT-3 visual examination results acceptable.
   4) Performed VT-3 visual examination on the existing piston tube nut Serial No 3112. VT-3 visual examination results acceptable.
   5) Installed replacement Cylinder Tube And Flange (CT&F) assembly Serial No A9414.
   6) Reinstalled existing Piston Tube (PT) assembly Serial No 5694.
   7) Reinstalled existing ring flange Serial No 2657.
   8) Reinstalled VT-3 visually examined existing piston tube nut Serial No 3112.
   9) Reinstalled VT-3 visually examined existing ring flange cap screws.

NOTES -

1) ASME Section III Code Cases are as listed on the N-2 Code Data Report for the Control Rod Drive (CRD) assembly Serial No A9414.
2) The existing Cylinder Tube And Flange (CT&F) assembly Serial No 7151 is certified to comply with ASME Section III, Code Class 1, 1971 Edition with no Addenda.
3) ASME pressure boundary (retaining) parts and materials such as Piston Tube (PT) assembly, ring flange, ring flange cap screws and piston tube nut were reused during CRD overhaul activities with the exception of Cylinder Tube And Flange (CT&F) assembly which was replaced.
4) The replacement Cylinder Tube And Flange (CT&F) assembly Serial No A9414 is certified to comply with ASME Section III, Code Class 1, 1974 Edition with Winter 1975 Addenda.
5) The entire Control Rod Drive (CRD) assembly is identified by the Cylinder Tube And Flange (CT&F) Serial No A9414.

WOT No 01062290 18

ENERGY NORTHWEST
People·Vision·Solutions

FORM NIS-2 OWNER'S REPORT FOR REPAIRS OR REPLACEMENTS (Back)

8 Tests Conducted: Hydrostatic [ ] *Pneumatic* [ ] *Nominal Operating Pressure* [ ] *None* [X]

Test Pressure: Psig *Test Temperature:* °F

Component Design Pressure: Psig *Temperature:* °F

9. Remarks (Applicable Manufacturer's Data Reports to be attached): See attached N-2 Code Data Report for the replacement Cylinder Tube And Flange (CT&F) assembly Serial No A9414.

CERTIFICATE OF COMPLIANCE

We certify that the statements made in this Owner's Report are correct and this replacement *conforms to the rules of the ASME Code, Section XI.*

Type Code Symbol Stamp: Not Applicable

Certificate Of Authorization No.: Not Applicable

Expiration Date: Not Applicable

Prepared By Kuldip Singh *Signed By* Kuldip Singh

Kuldip Singh - Program Lead Engineer (PLE) Kuldip Singh - Program Lead Engineer (PLE)

Date 1/11/05 *Date* 1/11/05

CERTIFICATE OF INSERVICE INSPECTION

I, the undersigned, holding a valid commission issued by the National Board of Boiler and Pressure Vessel Inspectors and the State of Washington *and employed by* Hartford Steam Boiler Of Connecticut of Hartford, Connecticut *have inspected the components described in this Owner's Report during the period* 7/26/2004 *to* 3/16/2005 *and state to the best of my knowledge and belief, the Owner has performed examinations and taken corrective measures described in this Owner's Report in accordance with the requirements of the ASME Code, Section XI.*

By signing this certificate neither the Inspector nor his employer makes any warranty, expressed or implied, concerning the examinations and corrective measures described in this Owner's Report. Furthermore, neither the Inspector nor his employer shall be liable in any manner for any personal injury or property damage or a loss of any kind arising from or connected with this inspection.

Inspector's Signature *Commissions* 10655W A, B, N, I

National Board, State, and Endorsements

Date 3/16/2005

(. 1 , W07 No. 010 62290 18

FORM N-2 NPT CERTIFICATE HOLDERS' DATA REPORT FOR NUCLEAR PART AND APPURTENANCES*

As required by the Provision of the ASME Code Rules, Section III, Div. I

1. Manufactured & Certified by : General Electric Company Nuclear Fuel & Components Manufacturing (GE NF & CM)
   2117 Castle Hayne Road, Wilmington, North Carolina 28401
   (Name and Address of NPT Certificate Holder)

   (b) Manufactured for : WNP 2 Richland, Washington 99352
   (Name and Address of N Certificate Holder for completed nuclear component)

2. Identification - Certificate Holder's S/N of Part : A9414 Nat'l Bd. No. N/A

   (a) Constructed According to Drawing No: 919D258G003 Rev 18 Dwg. Prepared by D. L. Peterson

   (b) Description of Part Inspected: Cylinder Tube & Flange

   (c) Applicable ASME Code: Section III , Edition 1974 , Addenda Date W75 , Case No. 1361-2 Class 1

3. REMARKS: Standard part for use with Reactor, Hydrostatically tested at 1825 psi. min.
   (Brief description of service for which component was designed)

Sheet 1 of 2

We certify that the statements in this report are correct and this vessel part or appurtenance as defined in the code conforms to the rules of construction of the ASME Code Section III. (The applicable Designed Specification and Stress Report are not the responsibility of the NPT Certificate Holder for parts. An NPT Certification Holder for appurtenances is responsible for furnishing a separate Design Specification and Stress Report if the appurtenance is not included in the component Design Specification and Stress Report).

Date: 06/27/95 Signed GE - NEBG - NF & CM - QA By
(NPT Certificate Holder) (ASC QA Representive)

Certificate of Authorization Expires: 6/16/96 Certification of Authorization No. : NPT N - 1151

Certification of Design for Appurtenance

Design information on file at GE Company, San Jose, California

Stress analysis report on file at GE Company, San Jose, California

DC22A6253 Rev. 1
Design specification certified by Bjorn Haaberg Prof. Eng. State Calif. Reg. No. 15570

DC22A6254 Rev 1
Stress analysis report certified by Edward Yoshio Prof. Eng. State Calif. Reg. No. M018646

Certification of Shop Inspection

I, the undersigned, holding a valid commission by the National Board of Boiler and Pressure Inspectors and/or the State or Province of North Carolina and employed by Department of Labor of State of North Carolina have inspected the part of a pressure vessel described in this Partial Data Report on 5/16, 1995, and state that to the best of my knowledge and belief, the NPT Certificate Holder has constructed this part in accordance with the ASME Code Section III.
By signing this certificate, neither the Inspector nor his employer makes any warranty, expressed or implied, concerning the part described in the Partial Data Report. Furthermore, neither the Inspector nor his employer shall be liable in any manner for any personal injury or property damages or a loss of any kind arising from or connected with this inspection.

6/27, 1995 — Date
Jerome P Emrich — Inspector's Signature
NC 1231, Ohio, WC 3686 PA — National Board, State, Province And No.

*Supplemental sheets in form of lists, sketches or drawing may be used provided (1) size is 8-1/2" x 11", (2) information in 1-2 on this Data Report is included on each sheet, and (3) each sheet is numbered and number of sheets is recorded in Item 3. "REMARKS".

(07/90)

FORM N-2 (back)

Items 4-8 Incl. to be completed for single wall vessels, jackets vessels, or shells of heat exchangers.

4. Shell: Material _____ T.S. _____ Nominal Thickness ____ in. Corrosion Allowance ____ in. Dia. ____ ft. ____ in. Length ____ ft. ____ in.
(Kind & Spec. No.) (Min. of Range Specified)

5. Seams: Long _____ H.T.[1] _____ R.T. _____ Efficiency _____%
Girth _____ H.T.[1] _____ R.T. _____ No. of Courses _____

6. Heads: (a) Material _____ T.S. _____ (b) Material _____ T.S. _____

	Location (Top Bottom, Ends)	Thickness	Crown Radius	Knuckle Radius	Elliptical Ratio	Concial Apex Angle	Hemispherical Radius	Flat Diameter	Side to Press. (conv. or conc.)
(a)									
(b)									

If removable, bolts used _____ (Material, Spec. No., T.S. Size Number) Other fastening _____ (Describe or attach sketch)

7. Jacket Closure: _____
(Describe as ogee and weld, bar, etc. If bar give dimensions, if bolts, describe or sketch)
Drop Weight _____
Charpy Impact _____ ft-lb

8. Design pressure[2] 1250 psi at 575 °F at temp of _____ °F

Items 9 and 10 to be completed for tube sections

9. Tube Sheets: Stationary. Material _____ (Kind & Spec. No.) Dia. _____ (Subject to pressure) Thickness ____ in. Attachment _____ (Welded, Bolted)
Floating. Material _____ Dia. _____ Thickness ____ in. Attachment _____

10. Tubes: Material _____ O.D. _____ in. Thickness _____ Inches or gage. Number _____ Type _____ (Str. or U)

Items 11 - 14 incl. to be completed for inner chambers of jacketed vessels, or channels of heat exchangers.

11. Shell: Material _____ T.S. _____ Nominal Thickness ____ in. Corrosion Allowance ____ in. Dia. ____ ft. ____ in. Length ____ ft. ____ in.
(Kind & Spec. No.) (Min. of Range Specified)

12. Seams: Long _____ H.T.[1] _____ R.T. _____ Efficiency _____%
Girth _____ H.T.[1] _____ R.T. _____ No. of Courses _____

13. Heads: (a) Material _____ T.S. _____ (b) Material _____ T.S. _____

	Location	Thickness	Crown Radius	Knuckle Radius	Elliptical Ratio	Concial Apex Angle	Hemispherical Radius	Flat Diameter	Side to Press. (conv. or conc.)
(a)	Top, bottom, ends								
(b)	Channel								

If removable, bolts used (a)_____ (b)_____ (c)_____ Other fastening _____ (Describe or attach sketch)
Drop Weight _____
Charpy Impact _____ ft-lb

14. Design pressure[2] _____ psi at _____ °F at temp of _____ °F

Items below to be completed for all vessels where applicable.

15. Safety Valve Outlets: Number _____ Size _____ Location _____

16. Nozzles:

Purpose (Inlet, Outlet, Drain)	Number	Dia. or Size	Type	Material	Thickness	Reinforcement Material	How Attached

17. Inspection Openings: Manholes, No. _____ Size _____ Location _____
Handholes, No. _____ Size _____ Location _____
Threaded, No. _____ Size _____ Location _____

18. Supports: Skirt _____ (Yes or No) Lugs _____ (Number) Legs _____ (Number) Other _____ (Describe) Attached _____ (Where & How)

1 - If Postweld Heat-Treated.
2 - List other internal or external pressure with coincident temperature when applicable.

WO7 NO. 01062290 18

FORM N-2 NPT CERTIFICATE HOLDERS' DATA REPORT FOR NUCLEAR PART AND APPURTENANCES*

As required by the Provision of the ASME Code Rules, Section III, Div. I

Manufactured & Certified by : General Electric Company Nuclear Fuel & Components Manufacturing (GE NF & CM)

2117 Castle Hayne Road, Wilmington, North Carolina 28401

(Name and Address of NPT Certificate Holder)

(b) Manufactured for : WNP 2 Richland, Washington 99352

(Name and Address of N Certificate Holder for completed nuclear component)

2. Identification - Certificate Holder's S/N of Part : A9414 Nat'l Bd. No. N/A

(a) Constructed According to Drawing No: 919D258G003 Rev 18 Dwg. Prepared by D. L. Peterson

(b) Description of Part Inspected: Cylinder Tube & Flange

(c) Applicable ASME Code: Section III , Edition 1974 , Addenda Date W'75 , Case No. 1361-2 Class 1

3. REMARKS: Standard part for use with Reactor. Hydrostatically tested at 1825 psi. min.

(Brief description of service for which component was designed)

1. Cap 166B9274P001
   SA182 - F316
   3/8" thick x 1 1/16" OD

2. Indicator Tube 167B4908P001
   SA312 - TP316
   3/4" sch 40 - seamless pipe
   0.113" wall thickness
   1.065" max. dia.

3. Plug 159A1176P001
   SA182 - F304
   1/4" thick x 0.812" OD

4. Flange 919D610P001 (719E474)
   SA182 - F304
   3.37" thick x 9 5/8" OD

5. Head 129B3539P005
   SA182 - F304
   7/8" thick x 2.875" dia.

6. Ring Flange 114B5122P002
   SA182 - F304
   1" thick x 5.0" OD x 1.75" ID

7. Cap Screw 117C4516P002
   SA193 - B6
   6 ea. 1/2" dia. on 4 1/8" bolt circle

8. Plug 175A7961P001
   SA182 - F304
   0.38" thick x 1.307" dia.

9. Nut 114B5460P001
   XM - 19 SA479
   1.30" thick x 2.62" dia.

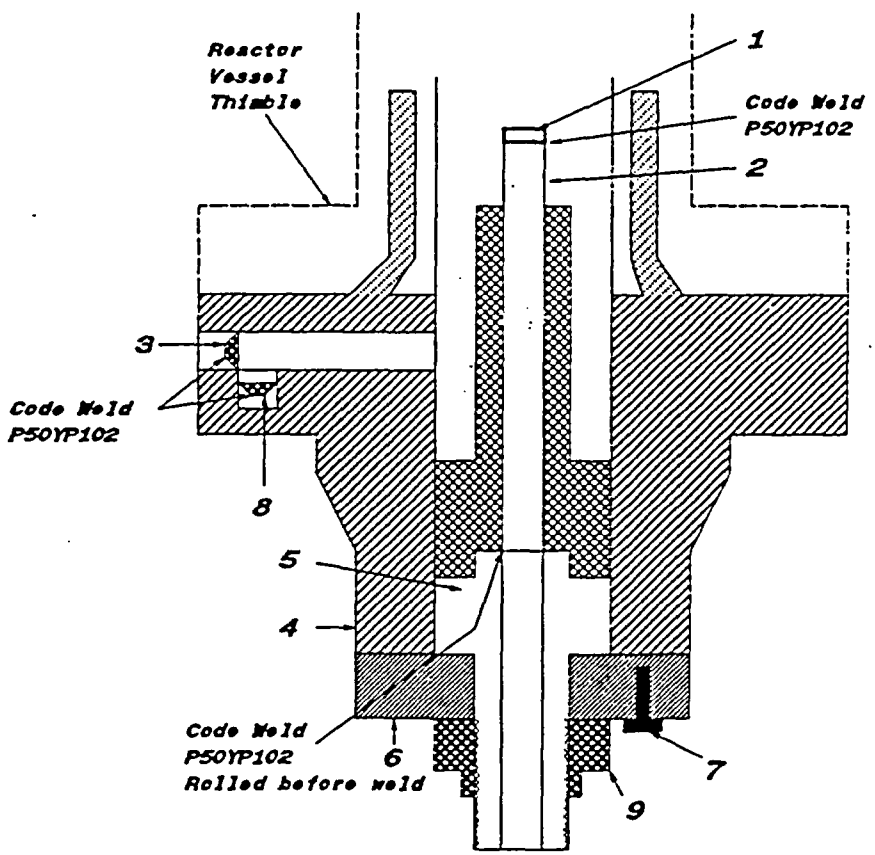

WOT No 01062290 19

ENERGY NORTHWEST
People·Vision·Solutions

FORM NIS-2 OWNER'S REPORT FOR REPAIRS OR REPLACEMENTS
As Required By The Provisions Of The ASME Code Section XI

1. Owner: Energy Northwest
Address: Columbia Generating Station, North Power Plant Loop, Richland, Washington, 99352
2. Plant: Columbia Generating Station
Address: Columbia Generating Station, North Power Plant Loop, Richland, Washington, 99352

Date: 01/05/05
Sheet: 1 Of 1
Unit: Not Applicable

3. (a) Work Performed By: Energy Northwest
(b) Repair Organization P.O. No, Job No, etc.: Energy Northwest
(c) Type Code Symbol Stamp: Not Applicable
(d) Certificate Of Authorization No.: Not Applicable
(e) Expiration Date: Not Applicable
4. Identification Of System: Control Rod Drive (CRD)
5. (a) Applicable Construction Code: ASME Section III, Code Class 1 - See Notes For Code Edition, Addenda And Code Cases
(b) Applicable Edition Of ASME Section XI Utilized For Repairs Or Replacements: 1989 Edition with no Addenda, Code Case: None
6. Identification Of Components Repaired Or Replaced And Replacement Components

Name Of Component	Name Of Manufacturer	Manufacturer's Serial No	National Board No	Other I.D.	Year Built	Repaired, Replaced Or Replacement	ASME Code Stamped (Yes Or No) Code Class
CRD	General Electric	7034	N/A	N/A	1975	----------	Yes, Code Class 1
CT&F	General Electric	7034	N/A	N/A	1975	Replaced	Yes, Code Class 1
CT&F	General Electric	A9646	N/A	N/A	1995	Replacement	Yes, Code Class 1

7. Description Of Work Performed: Overhauled Control Rod Drive (CRD) assembly Serial No 7034. The overhaul work was performed in accordance with plant procedure PPM No 10.5.4 "Control Rod Drive Overhaul" as follows:

1) Disassembled Control Rod Drive (CRD) assembly for overhaul.
2) Performed liquid penetrant (PT) examination on the existing Cylinder Tube And Flange (CT&F) assembly Serial No 7034. Liquid penetrant (PT) examination results unacceptable.
3) Performed VT-3 visual examination on the existing ring flange cap screws. VT-3 visual examination results acceptable.
4) Performed VT-3 visual examination on the existing piston tube nut Serial No 3132. VT-3 visual examination results acceptable.
5) Installed replacement Cylinder Tube And Flange (CT&F) assembly Serial No A9646.
6) Reinstalled existing Piston Tube (PT) assembly Serial No 5739.
7) Reinstalled existing ring flange Serial No 2472.
8) Reinstalled VT-3 visually examined existing piston tube nut Serial No 3132.
9) Reinstalled VT-3 visually examined existing ring flange cap screws.

NOTES -

1) ASME Section III Code Cases are as listed on the N-2 Code Data Report for the Control Rod Drive (CRD) assembly Serial No A9646.
2) The existing Cylinder Tube And Flange (CT&F) assembly Serial No 7034 is certified to comply with ASME Section III, Code Class 1, 1971 Edition with no Addenda.
3) ASME pressure boundary (retaining) parts and materials such as Piston Tube (PT) assembly, ring flange, ring flange cap screws and piston tube nut were reused during CRD overhaul activities with the exception of Cylinder Tube And Flange (CT&F) assembly which was replaced.
4) The replacement Cylinder Tube And Flange (CT&F) assembly Serial No A9646 is certified to comply with ASME Section III, Code Class 1, 1974 Edition with Winter 1975 Addenda.
5) The entire Control Rod Drive (CRD) assembly is identified by the Cylinder Tube And Flange (CT&F) Serial No A9646.

WOT No 01062290 19

ENERGY NORTHWEST
People·Vision·Solutions

FORM NIS-2 OWNER'S REPORT FOR REPAIRS OR REPLACEMENTS (Back)

8 Tests Conducted: Hydrostatic [ ] *Pneumatic* [ ] *Nominal Operating Pressure* [ ] *None* [X]

Test Pressure: Psig *Test Temperature:* °F

Component Design Pressure: Psig *Temperature:* °F

9. Remarks (Applicable Manufacturer's Data Reports to be attached): See attached N-2 Code Data Report for the replacement Cylinder Tube And Flange (CT&F) assembly Serial No A9646.

CERTIFICATE OF COMPLIANCE

We certify that the statements made in this Owner's Report are correct and this replacement *conforms to the rules of the ASME Code, Section XI.*

Type Code Symbol Stamp: Not Applicable

Certificate Of Authorization No.: Not Applicable

Expiration Date: Not Applicable

Prepared By Kuldip Singh - Program Lead Engineer (PLE) *Signed By* Kuldip Singh - Program Lead Engineer (PLE)

Date 1/11/05 *Date* 1/11/05

CERTIFICATE OF INSERVICE INSPECTION

I, the undersigned, holding a valid commission issued by the National Board of Boiler and Pressure Vessel Inspectors and the State of Washington *and employed by* Hartford Steam Boiler Of Connecticut of Hartford, Connecticut *have inspected the components described in this Owner's Report during the period* 7/26/2004 *to* 3/17/2005 *and state to the best of my knowledge and belief, the Owner has performed examinations and taken corrective measures described in this Owner's Report in accordance with the requirements of the ASME Code, Section XI.*

By signing this certificate neither the Inspector nor his employer makes any warranty, expressed or implied, concerning the examinations and corrective measures described in this Owner's Report. Furthermore, neither the Inspector nor his employer shall be liable in any manner for any personal injury or property damage or a loss of any kind arising from or connected with this inspection.

Inspector's Signature *Commissions* 10655W A,B,N,I National Board, State, and Endorsements

Date 3/17/2005

WO7 No: 01062290 19

FORM N-2 NPT CERTIFICATE HOLDERS' DATA REPORT FOR NUCLEAR PART AND APPURTENANCES*

As required by the Provision of the ASME Code Rules, Section III, Div. I

1. Manufactured & Certified by : General Electric Company Nuclear Fuel & Components Manufacturing (GE NF & CM)

   2117 Castle Hayne Road, Wilmington, North Carolina 28401

   (Name and Address of NPT Certificate Holder)

   (b) Manufactured for : WNP 2 Richland, Washington 99352

   (Name and Address of N Certificate Holder for completed nuclear component)

2. Identification - Certificate Holder's S/N of Part : A9646 Nat'l Bd. No. N/A

   (a) Constructed According to Drawing No: 919D258G003 Rev 19 Dwg. Prepared by D. L. Peterson

   (b) Description of Part Inspected: Cylinder Tube & Flange

   (c) Applicable ASME Code: Section III , Edition 1974 , Addenda Date W75 , Case No. 1361-2 Class 1

3. REMARKS: Standard part for use with Reactor. Hydrostatically tested at 1825 psi. min.

   (Brief description of service for which component was designed)

Sheet 1 of 2

We certify that the statements in this report are correct and this vessel part or appurtenance as defined in the code conforms to the rules of construction of the ASME Code Section III. (The applicable Designed Specification and Stress Report are not the responsibility of the NPT Certificate Holder for parts. An NPT Certification Holder for appurtenances is responsible for furnishing a separate Design Specification and Stress Report if the appurtenance is not included in the component Design Specification and Stress Report).

Date: 06/27/95 Signed GE - NEBG - NF & CM - QA By

(NPT Certificate Holder) (SC QA Representive)

Certificate of Authorization Expires: 6/16/96 Certification of Authorization No. : NPT N - 1151

Certification of Design for Appurtenance

Design information on file at GE Company, San Jose, California

Stress analysis report on file at GE Company, San Jose, California

DC22A6253 Rev. 1
Design specification certified by Bjorn Haaberg Prof. Eng. State Calif. Reg. No. 15570

DC22A6254 Rev 1
Stress analysis report certified by Edward Yoshio Prof. Eng. State Calif. Reg. No. M018646

Certification of Shop Inspection

I, the undersigned, holding a valid commission by the National Board of Boiler and Pressure Inspectors and/or the State or Province of North Carolina and employed by Department of Labor of State of North Carolina have inspected the part of a pressure vessel described in this Partial Data Report on 5/16, 1995, and state that to the best of my knowledge and belief, the NPT Certificate Holder has constructed this part in accordance with the ASME Code Section III.

By signing this certificate, neither the Inspector nor his employer makes any warranty, expressed or implied, concerning the part described in the Partial Data Report. Furthermore, neither the Inspector nor his employer shall be liable in any manner for any personal injury or property damages or a loss of any kind arising from or connected with this inspection.

6/27, 1995		NC 1231, Ohio, WC 3686 PA
Date	Inspector's Signature	National Board, State, Province And No.

*Supplemental sheets in form of lists, sketches or drawing may be used provided (1) size is 8-1/2" x 11", (2) information in 1-2 on this Data Report is included on each sheet, and (3) each sheet is numbered and number of sheets is recorded in Item 3. "REMARKS".

(07/90)

FORM N-2 (back)

Items 4-8 Incl. to be completed for single wall vessels, jackets vessels, or shells of heat exchangers.

4. Shell: Material _____ T.S. _____ Nominal Thickness ___ in. Corrosion Allowance ___ in. Dia. ___ ft. ___ in. Length ___ ft. ___
(Kind & Spec. No.) (Min. of Range Specified)

5. Seams: Long _____ H.T.[1] _____ R.T. _____ Efficiency _____%
Girth _____ H.T.[1] _____ R.T. _____ No. of Courses _____

6. Heads: (a) Material _____ T.S. _____ (b) Material _____ T.S. _____

	Location (Top Bottom, Ends)	Thickness	Crown Radius	Knuckle Radius	Elliptical Ratio	Concial Apex Angle	Hemispherical Radius	Flat Diameter	Side to Press. (conv. or conc.)
(a)									
(b)									

If removable, bolts used _____ (Material, Spec. No., T.S. Size Number) Other fastening _____ (Describe or attach sketch)

7. Jacket Closure: _____
(Describe as ogee and weld, bar, etc. If bar give dimensions, if bolts, describe or sketch)

Drop Weight _____
Charpy Impact _____ ft-lb

8. Design pressure[2] 1250 psi at 575 °F at temp of _____ °F

Items 9 and 10 to be completed for tube sections

9. Tube Sheets: Stationary. Material _____ (Kind & Spec. No.) Dia. _____ (Subject to pressure) Thickness ___ in. Attachment _____ (Welded, Bolted)
Floating. Material _____ Dia. _____ Thickness ___ in. Attachment _____

10. Tubes: Material _____ O.D. _____ in. Thickness _____ inches or gage. Number _____ Type _____ (Str. or U)

Items 11 - 14 incl. to be completed for inner chambers of jacketed vessels, or channels of heat exchangers.

11. Shell: Material _____ T.S. _____ Nominal Thickness ___ in. Corrosion Allowance ___ in. Dia. ___ ft. ___ in. Length ___ ft. ___ in.
(Kind & Spec. No.) (Min. of Range Specified)

12. Seams: Long _____ H.T.[1] _____ R.T. _____ Efficiency _____%
Girth _____ H.T.[1] _____ R.T. _____ No. of Courses _____

13. Heads: (a) Material _____ T.S. _____ (b) Material _____ T.S. _____

	Location	Thickness	Crown Radius	Knuckle Radius	Elliptical Ratio	Concial Apex Angle	Hemispherical Radius	Flat Diameter	Side to Press. (conv. or conc.)
(a)	Top, bottom, ends								
(b)	Channel								

If removable, bolts used (a)_____ (b)_____ (c)_____ Other fastening _____ (Describe or attach sketch)

Drop Weight _____
Charpy Impact _____ ft-lb

14. Design pressure[2] _____ psi at _____ °F at temp of _____ °F

Items below to be completed for all vessels where applicable.

15. Safety Valve Outlets: Number _____ Size _____ Location _____

16. Nozzles:

Purpose (Inlet, Outlet, Drain)	Number	Dia. or Size	Type	Material	Thickness	Reinforcement Material	How Attached

17. Inspection Openings: Manholes, No. _____ Size _____ Location _____
Handholes, No. _____ Size _____ Location _____
Threaded, No. _____ Size _____ Location _____

18. Supports: Skirt _____ (Yes or No) Lugs _____ (Number) Legs _____ (Number) Other _____ (Describe) Attached _____ (Where & How)

1 - If Postweld Heat-Treated.
2 - List other internal or external pressure with coincident temperature when applicable.

FORM N-2 NPT CERTIFICATE HOLDERS' DATA REPORT FOR NUCLEAR PART AND APPURTENANCES*
As required by the Provision of the ASME Code Rules, Section III, Div. I

WOT No. 01062290 19

Manufactured & Certified by : General Electric Company Nuclear Fuel & Components Manufacturing (GE NF & CM)
2117 Castle Hayne Road, Wilmington, North Carolina 28401
(Name and Address of NPT Certificate Holder)

(b) Manufactured for : WNP 2 Richland, Washington 99352
(Name and Address of N Certificate Holder for completed nuclear component)

2. Identification - Certificate Holder's S/N of Part : A9646 Nat'l Bd. No. N/A

(a) Constructed According to Drawing No: 919D258G003 Rev 19 Dwg. Prepared by D. L. Peterson

(b) Description of Part Inspected: Cylinder Tube & Flange

(c) Applicable ASME Code: Section III , Edition 1974 , Addenda Date W'75 , Case No. 1361-2 Class 1

3. REMARKS: Standard part for use with Reactor. Hydrostatically tested at 1825 psi. min.
(Brief description of service for which component was designed)

1. Cap 166B9274P001
SA182 - F316
3/8" thick x 1 1/16" OD

2. Indicator Tube 167B4908P001
SA312 - TP316
3/4" sch 40 - seamless pipe
0.113" wall thickness
1.065" max. dia.

3. Plug 159A1176P001
SA182 - F304
1/4" thick x 0.812" OD

4. Flange 919D610P001 (719E474)
SA182 - F304
3.37" thick x 9 5/8" OD

5. Head 129B3539P005
SA182 - F304
7/8" thick x 2.875" dia.

6. Ring Flange 114B5122P002
SA182 - F304
1" thick x 5.0" OD x 1.75" ID

7. Cap Screw 117C4516P002
SA193 - B6
6 ea. 1/2" dia. on 4 1/8" bolt circle

8. Plug 175A7961P001
SA182 - F304
0.38" thick x 1.307" dia.

9. Nut 114B5460P001
XM - 19 SA479
1.30" thick x 2.62" dia.

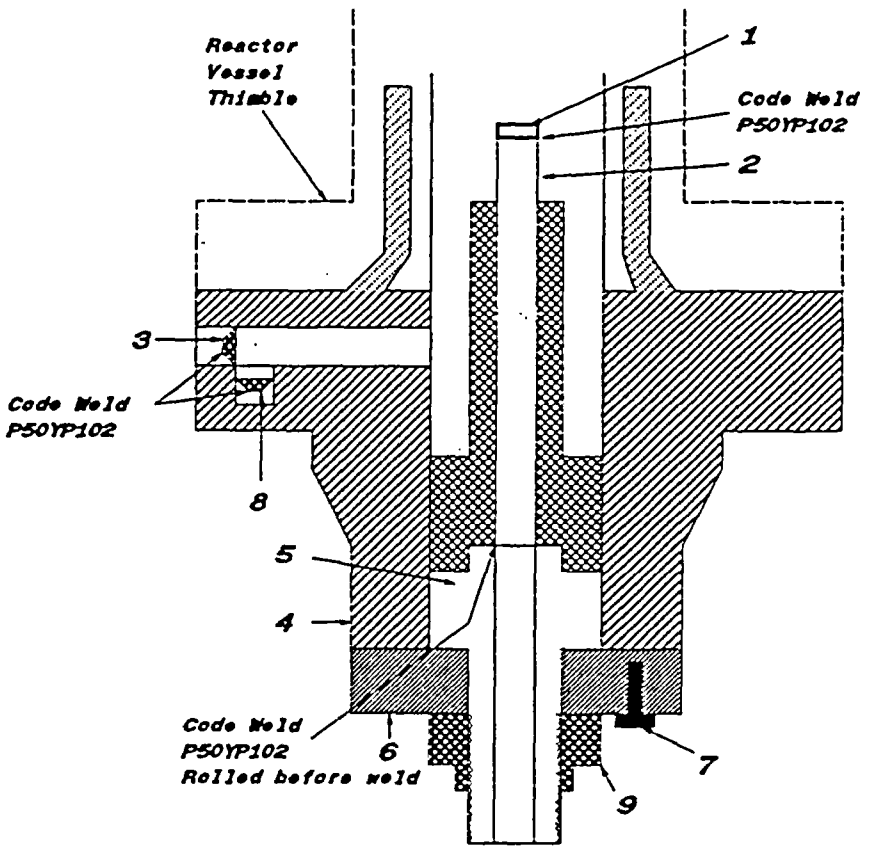

WOT No 01062290 43

ENERGY NORTHWEST
People·Vision·Solutions

FORM NIS-2 OWNER'S REPORT FOR REPAIRS OR REPLACEMENTS
As Required By The Provisions Of The ASME Code Section XI

1. Owner: Energy Northwest
Address: Columbia Generating Station, North Power Plant Loop, Richland, Washington, 99352
2. Plant: Columbia Generating Station
Address: Columbia Generating Station, North Power Plant Loop, Richland, Washington, 99352

Date: 01/05/05
Sheet: 1 Of 1
Unit: Not Applicable

3. (a) Work Performed By: Energy Northwest
(b) Repair Organization P.O. No, Job No, etc.: Energy Northwest
(c) Type Code Symbol Stamp: Not Applicable
(d) Certificate Of Authorization No.: Not Applicable
(e) Expiration Date: Not Applicable
4. Identification Of System: Control Rod Drive (CRD)
5. (a) Applicable Construction Code: ASME Section III, Code Class 1 - See Notes For Code Edition, Addenda And Code Cases
(b) Applicable Edition Of ASME Section XI Utilized For Repairs Or Replacements: 1989 Edition with no Addenda, Code Case: None
6. Identification Of Components Repaired Or Replaced And Replacement Components

Name Of Component	Name Of Manufacturer	Manufacturer's Serial No	National Board No	Other I.D.	Year Built	Repaired, Replaced Or Replacement	ASME Code Stamped (Yes Or No) Code Class
CRD	General Electric	6536	N/A	N/A	1974	----------	Yes, Code Class 1
CT&F	General Electric	6536	N/A	N/A	1974	Replaced	Yes, Code Class 1
CT&F	General Electric	A9452	N/A	N/A	1995	Replacement	Yes, Code Class 1

7. Description Of Work Performed: Overhauled Control Rod Drive (CRD) assembly Serial No 6536. The overhaul work was performed in accordance with plant procedure PPM No 10.5.4 "Control Rod Drive Overhaul" as follows:

1) Disassembled Control Rod Drive (CRD) assembly for overhaul.
2) Performed liquid penetrant (PT) examination on the existing Cylinder Tube And Flange (CT&F) assembly Serial No 6536. Liquid penetrant (PT) examination results unacceptable.
3) Performed VT-3 visual examination on the existing ring flange cap screws. VT-3 visual examination results acceptable.
4) Performed VT-3 visual examination on the existing piston tube nut Serial No 2787. VT-3 visual examination results acceptable.
5) Installed replacement Cylinder Tube And Flange (CT&F) assembly Serial No A9452.
6) Reinstalled existing Piston Tube (PT) assembly Serial No 5444.
7) Reinstalled existing ring flange Serial No 2177.
8) Reinstalled VT-3 visually examined existing piston tube nut Serial No 2787.
9) Reinstalled VT-3 visually examined existing ring flange cap screws.

NOTES -

1) ASME Section III Code Cases are as listed on the N-2 Code Data Report for the Control Rod Drive (CRD) assembly Serial No A9452.
2) The existing Cylinder Tube And Flange (CT&F) assembly Serial No 6536 is certified to comply with ASME Section III, Code Class 1, 1974 Edition with no Addenda.
3) ASME pressure boundary (retaining) parts and materials such as Piston Tube (PT) assembly, ring flange, ring flange cap screws and piston tube nut were reused during CRD overhaul activities with the exception of Cylinder Tube And Flange (CT&F) assembly which was replaced.
4) The replacement Cylinder Tube And Flange (CT&F) assembly Serial No A9452 is certified to comply with ASME Section III, Code Class 1, 1974 Edition with Winter 1975 Addenda.
5) The entire Control Rod Drive (CRD) assembly is identified by the Cylinder Tube And Flange (CT&F) Serial No A9452.

WOT No 01062290 43

ENERGY NORTHWEST
People·Vision·Solutions

FORM NIS-2 OWNER'S REPORT FOR REPAIRS OR REPLACEMENTS (Back)

8 Tests Conducted: Hydrostatic [ ] Pneumatic [ ] Nominal Operating Pressure [ ] None [X]
Test Pressure: Psig Test Temperature: °F
Component Design Pressure: Psig Temperature: °F

9. Remarks (Applicable Manufacturer's Data Reports to be attached): See attached N-2 Code Data Report for the replacement Cylinder Tube And Flange (CT&F) assembly Serial No A9452.

CERTIFICATE OF COMPLIANCE

We certify that the statements made in this Owner's Report are correct and this replacement conforms to the rules of the ASME Code, Section XI.
Type Code Symbol Stamp: Not Applicable
Certificate Of Authorization No.: Not Applicable
Expiration Date: Not Applicable

Prepared By Kuldip Singh - Program Lead Engineer (PLE) Signed By Kuldip Singh - Program Lead Engineer (PLE)

Date 1/14/05 Date 1/14/05

CERTIFICATE OF INSERVICE INSPECTION

I, the undersigned, holding a valid commission issued by the National Board of Boiler and Pressure Vessel Inspectors and the State of Washington and employed by Hartford Steam Boiler Of Connecticut of Hartford, Connecticut have inspected the components described in this Owner's Report during the period 7/26/2004 to 3/17/2005 and state to the best of my knowledge and belief, the Owner has performed examinations and taken corrective measures described in this Owner's Report in accordance with the requirements of the ASME Code, Section XI.
By signing this certificate neither the Inspector nor his employer makes any warranty, expressed or implied, concerning the examinations and corrective measures described in this Owner's Report. Furthermore, neither the Inspector nor his employer shall be liable in any manner for any personal injury or property damage or a loss of any kind arising from or connected with this inspection.

Inspector's Signature Commissions 10655W A,B,N,I
National Board, State, and Endorsements

Date 3/17/2005

WOT No. 01062290 43

FORM N-2 NPT CERTIFICATE HOLDERS' DATA REPORT FOR NUCLEAR PART AND APPURTENANCES*

As required by the Provision of the ASME Code Rules, Section III, Div. I

1/18/05

1. Manufactured & Certified by : General Electric Company Nuclear Fuel & Components Manufacturing (GE NF & CM)

2117 Castle Hayne Road, Wilmington, North Carolina 28401

(Name and Address of NPT Certificate Holder)

(b) Manufactured for : WNP 2 Richland, Washington 99352

(Name and Address of N Certificate Holder for completed nuclear component)

2. Identification - Certificate Holder's S/N of Part : A9452 Nat'l Bd. No. N/A

(a) Constructed According to Drawing No: 919D258G003 Rev 19 Dwg. Prepared by D. L. Peterson

(b) Description of Part Inspected: Cylinder Tube & Flange

(c) Applicable ASME Code: Section III , Edition 1974 , Addenda Date W'75 , Case No. 1361-2 Class 1

3. REMARKS: Standard part for use with Reactor. Hydrostatically tested at 1825 psi. min.

(Brief description of service for which component was designed)

Sheet 1 of 2

We certify that the statements in this report are correct and this vessel part or appurtenance as defined in the code conforms to the rules of construction of the ASME Code Section III. (The applicable Designed Specification and Stress Report are not the responsibility of the NPT Certificate Holder for parts. An NPT Certification Holder for appurtenances is responsible for furnishing a separate Design Specification and Stress Report if the appurtenance is not included in the component Design Specification and Stress Report).

Date: 06/27/95 Signed GE - NEBG - NF & CM - QA (NPT Certificate Holder) By [signature] (SC QA Representive)

Certificate of Authorization Expires: 6/16/96 Certification of Authorization No. : NPT N - 1151

Certification of Design for Appurtenance

Design information on file at GE Company, San Jose, California

Stress analysis report on file at GE Company, San Jose, California

DC22A6253 Rev. 1
Design specification certified by Bjorn Haaberg Prof. Eng. State Calif. Reg. No. 15570

DC22A6254 Rev 1
Stress analysis report certified by Edward Yoshio Prof. Eng. State Calif. Reg. No. M018646

Certification of Shop Inspection

I, the undersigned, holding a valid commission by the National Board of Boiler and Pressure Inspectors and/or the State or Province of North Carolina and employed by Department of Labor of State of North Carolina have inspected the part of a pressure vessel described in this Partial Data Report on 5/16, 1995, and state that to the best of my knowledge and belief, the NPT Certificate Holder has constructed this part in accordance with the ASME Code Section III.

By signing this certificate, neither the Inspector nor his employer makes any warranty, expressed or implied, concerning the part described in the Partial Data Report. Furthermore, neither the Inspector nor his employer shall be liable in any manner for any personal injury or property damages or a loss of any kind arising from or connected with this inspection.

Date	Inspector's Signature	National Board, State, Province And No.
6/27, 1995	[signature]	NC 1231, Ohio, WC 3686 PA

*Supplemental sheets in form of lists, sketches or drawing may be used provided (1) size is 8-1/2" x 11", (2) information in 1-2 on this Data Report is included on each sheet, and (3) each sheet is numbered and number of sheets is recorded in Item 3. "REMARKS".

(07/90)

FORM N-2 (back)

Items 4-8 Incl. to be completed for single wall vessels, jackets vessels, or shells of heat exchangers.

4. Shell: Material _____ T.S. _____ Nominal Thickness ___ in. Corrosion Allowance ___ in. Dia. ___ ft. ___ in. Length ___ ft. ___
(Kind & Spec. No.) (Min. of Range Specified)

5. Seams: Long _____ H.T.[1] _____ R.T. _____ Efficiency _____%
Girth _____ H.T.[1] _____ R.T. _____ No. of Courses _____

6. Heads: (a) Material _____ T.S. _____ (b) Material _____ T.S. _____

	Location (Top Bottom, Ends)	Thickness	Crown Radius	Knuckle Radius	Elliptical Ratio	Concial Apex Angle	Hemispherical Radius	Flat Diameter	Side to Press. (conv. or conc.)
(a)									
(b)									

If removable, bolts used _____ (Material, Spec. No., T.S. Size Number) Other fastening _____ (Describe or attach sketch)

7. Jacket Closure: _____
(Describe as ogee and weld, bar, etc. If bar give dimensions, if bolts, describe or sketch)

Drop Weight _____
Charpy Impact _____ ft-lb

8. Design pressure[2] 1250 psi at 575 °F at temp of _____ °F

Items 9 and 10 to be completed for tube sections

9. Tube Sheets: Stationary. Material _____ (Kind & Spec. No.) Dia. _____ (Subject to pressure) Thickness ___ in. Attachment _____ (Welded, Bolted)
Floating. Material _____ Dia. _____ Thickness ___ in. Attachment _____

10. Tubes: Material _____ O.D. _____ in. Thickness _____ inches or gage. Number _____ Type _____ (Str. or U)

Items 11 - 14 incl. to be completed for inner chambers of jacketed vessels, or channels of heat exchangers.

11. Shell: Material _____ T.S. _____ Nominal Thickness ___ in. Corrosion Allowance ___ in. Dia. ___ ft. ___ in. Length ___ ft. ___ in
(Kind & Spec. No.) (Min. of Range Specified)

12. Seams: Long _____ H.T.[1] _____ R.T. _____ Efficiency _____%
Girth _____ H.T.[1] _____ R.T. _____ No. of Courses _____

13. Heads: (a) Material _____ T.S. _____ (b) Material _____ T.S. _____

	Location	Thickness	Crown Radius	Knuckle Radius	Elliptical Ratio	Concial Apex Angle	Hemispherical Radius	Flat Diameter	Side to Press. (conv. or conc.)
(a)	Top, bottom, ends								
(b)	Channel								

If removable, bolts used (a)_____ (b)_____ (c)_____ Other fastening _____ (Describe or attach sketch)

Drop Weight _____
Charpy Impact _____ ft-lb

14. Design pressure[2] _____ psi at _____ °F at temp of _____ °F

Items below to be completed for all vessels where applicable.

15. Safety Valve Outlets: Number _____ Size _____ Location _____

16. Nozzles:

Purpose (Inlet, Outlet, Drain)	Number	Dia. or Size	Type	Material	Thickness	Reinforcement Material	How Attached

17. Inspection Openings: Manholes, No. _____ Size _____ Location _____
Handholes, No. _____ Size _____ Location _____
Threaded, No. _____ Size _____ Location _____

18. Supports: Skirt _____ (Yes or No) Lugs _____ (Number) Legs _____ (Number) Other _____ (Describe) Attached _____ (Where & How)

1 - If Postweld Heat-Treated.
2 - List other internal or external pressure with coincident temperature when applicable.

FORM N-2 NPT CERTIFICATE HOLDERS' DATA REPORT FOR NUCLEAR PARTS AND APPURTENANCES*
As required by the Provision of the ASME Code Rules, Section III, Div. I

WOT No. 01062290 43

Manufactured & Certified by : General Electric Company Nuclear Fuel & Components Manufacturing (GE NF & CM)
2117 Castle Hayne Road, Wilmington, North Carolina 28401
(Name and Address of NPT Certificate Holder)

(b) Manufactured for : WNP 2 Richland, Washington 99352
(Name and Address of N Certificate Holder for completed nuclear component)

2. Identification - Certificate Holder's S/N of Part : A9452 Nat'l Bd. No. N/A

(a) Constructed According to Drawing No: 919D258G003 Rev 19 Dwg. Prepared by D. L. Peterson

(b) Description of Part Inspected: Cylinder Tube & Flange

(c) Applicable ASME Code: Section III , Edition 1974 , Addenda Date W'75 , Case No. 1361-2 Class 1

3. REMARKS: Standard part for use with Reactor. Hydrostatically tested at 1825 psi. min.
(Brief description of service for which component was designed)

Sheet 2 of 2

1. Cap 166B9274P001
SA182 - F316
3/8" thick x 1 1/16" OD

2. Indicator Tube 167B4908P001
SA312 - TP316
3/4" sch 40 - seamless pipe
0.113" wall thickness
1.065" max. dia.

3. Plug 159A1176P001
SA182 - F304
1/4" thick x 0.812" OD

4. Flange 919D610P001 (719E474)
SA182 - F304
3.37" thick x 9 5/8" OD

5. Head 129B3539P005
SA182 - F304
7/8" thick x 2.875" dia.

6. Ring Flange 114B5122P002
SA182 - F304
1" thick x 5.0" OD x 1.75" ID

7. Cap Screw 117C4516P002
SA193 - B6
6 ea. 1/2" dia. on 4 1/8" bolt circle

8. Plug 175A7961P001
SA182 - F304
0.38" thick x 1.307" dia.

9. Nut 114B5460P001
XM - 19 SA479
1.30" thick x 2.62" dia.

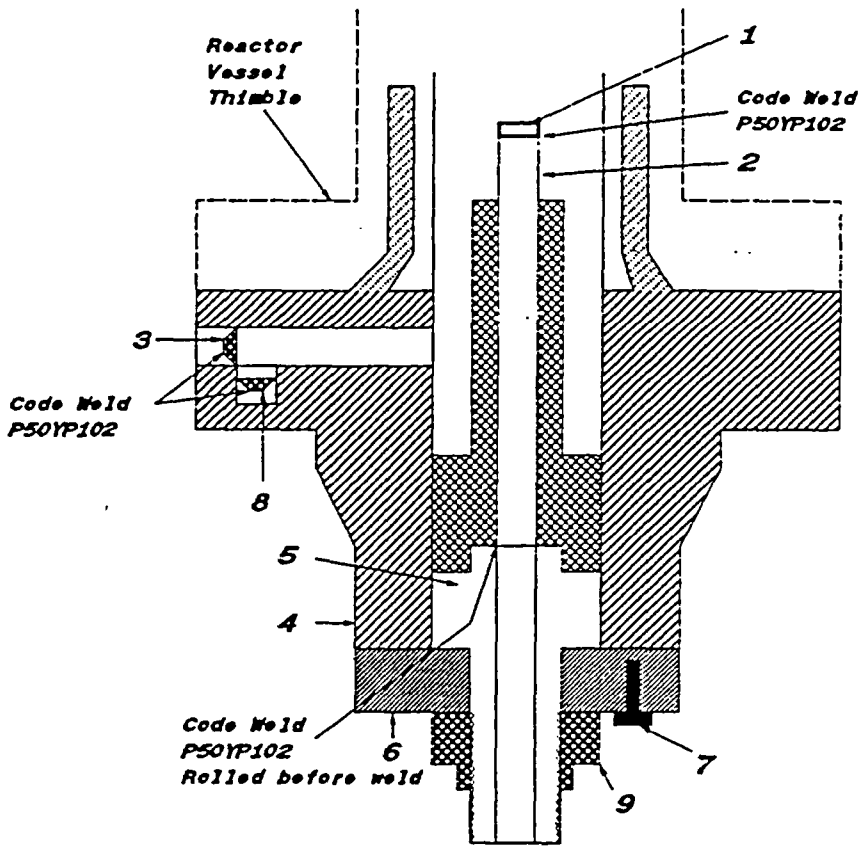

WOT No 01062290 44

ENERGY NORTHWEST
People·Vision·Solutions

FORM NIS-2 OWNER'S REPORT FOR REPAIRS OR REPLACEMENTS
As Required By The Provisions Of The ASME Code Section XI

1. Owner: Energy Northwest
Address: Columbia Generating Station, North Power Plant Loop, Richland, Washington, 99352
2. Plant: Columbia Generating Station
Address: Columbia Generating Station, North Power Plant Loop, Richland, Washington, 99352

Date: 01/05/05
Sheet: 1 Of 1
Unit: Not Applicable

3. (a) Work Performed By: Energy Northwest
(b) Repair Organization P.O. No, Job No, etc.: Energy Northwest
(c) Type Code Symbol Stamp: Not Applicable
(d) Certificate Of Authorization No.: Not Applicable
(e) Expiration Date: Not Applicable
4. Identification Of System: Control Rod Drive (CRD)
5. (a) Applicable Construction Code: ASME Section III, Code Class 1 - See Notes For Code Edition, Addenda And Code Cases
(b) Applicable Edition Of ASME Section XI Utilized For Repairs Or Replacements: 1989 Edition with no Addenda, Code Case: None
6. Identification Of Components Repaired Or Replaced And Replacement Components

Name Of Component	Name Of Manufacturer	Manufacturer's Serial No	National Board No	Other I.D.	Year Built	Repaired, Replaced Or Replacement	ASME Code Stamped (Yes Or No) Code Class
CRD	General Electric	6583	N/A	N/A	1974	----------	Yes, Code Class 1
CT&F	General Electric	6583	N/A	N/A	1974	Replaced	Yes, Code Class 1
CT&F	General Electric	A9448	N/A	N/A	1995	Replacement	Yes, Code Class 1

7. Description Of Work Performed: Overhauled Control Rod Drive (CRD) assembly Serial No 6583. The overhaul work was performed in accordance with plant procedure PPM No 10.5.4 "Control Rod Drive Overhaul" as follows:

1) Disassembled Control Rod Drive (CRD) assembly for overhaul.
2) Performed liquid penetrant (PT) examination on the existing Cylinder Tube And Flange (CT&F) assembly Serial No 6583. Liquid penetrant (PT) examination results unacceptable.
3) Performed VT-3 visual examination on the existing ring flange cap screws. VT-3 visual examination results acceptable.
4) Performed VT-3 visual examination on the existing piston tube nut Serial No 2765. VT-3 visual examination results acceptable.
5) Installed replacement Cylinder Tube And Flange (CT&F) assembly Serial No A9448.
6) Reinstalled existing Piston Tube (PT) assembly Serial No 5583.
7) Reinstalled existing ring flange Serial No 2348.
8) Reinstalled VT-3 visually examined existing piston tube nut Serial No 2765.
9) Reinstalled VT-3 visually examined existing ring flange cap screws.

NOTES -

1) ASME Section III Code Cases are as listed on the N-2 Code Data Report for the Control Rod Drive (CRD) assembly Serial No A9448.
2) The existing Cylinder Tube And Flange (CT&F) assembly Serial No 6583 is certified to comply with ASME Section III, Code Class 1, 1974 Edition with no Addenda.
3) ASME pressure boundary (retaining) parts and materials such as Piston Tube (PT) assembly, ring flange, ring flange cap screws and piston tube nut were reused during CRD overhaul activities with the exception of Cylinder Tube And Flange (CT&F) assembly which was replaced.
4) The replacement Cylinder Tube And Flange (CT&F) assembly Serial No A9448 is certified to comply with ASME Section III, Code Class 1, 1974 Edition with Winter 1975 Addenda.
5) The entire Control Rod Drive (CRD) assembly is identified by the Cylinder Tube And Flange (CT&F) Serial No A9448.

WOT No 01062290 44

ENERGY NORTHWEST
People · Vision · Solutions

FORM NIS-2 OWNER'S REPORT FOR REPAIRS OR REPLACEMENTS (Back)

8 Tests Conducted: Hydrostatic [ ] *Pneumatic* [ ] *Nominal Operating Pressure* [ ] *None* [X]
Test Pressure: Psig *Test Temperature:* °F
Component Design Pressure: Psig *Temperature:* °F

9. Remarks (Applicable Manufacturer's Data Reports to be attached): See attached N-2 Code Data Report for the replacement Cylinder Tube And Flange (CT&F) assembly Serial No A9448.

CERTIFICATE OF COMPLIANCE

We certify that the statements made in this Owner's Report are correct and this replacement *conforms to the rules of the ASME Code, Section XI.*
Type Code Symbol Stamp: Not Applicable
Certificate Of Authorization No.: Not Applicable
Expiration Date: Not Applicable

Prepared By Kuldip Singh - Program Lead Engineer (PLE) *Signed By* Kuldip Singh - Program Lead Engineer (PLE)

Date 1/14/05 *Date* 1/14/05

CERTIFICATE OF INSERVICE INSPECTION

I, the undersigned, holding a valid commission issued by the National Board of Boiler and Pressure Vessel Inspectors and the State of Washington *and employed by* Hartford Steam Boiler Of Connecticut of Hartford, Connecticut *have inspected the components described in this Owner's Report during the period* 7/26/2004 *to* 3/17/2005 *and state to the best of my knowledge and belief, the Owner has performed examinations and taken corrective measures described in this Owner's Report in accordance with the requirements of the ASME Code, Section XI.*
By signing this certificate neither the Inspector nor his employer makes any warranty, expressed or implied, concerning the examinations and corrective measures described in this Owner's Report. Furthermore, neither the Inspector nor his employer shall be liable in any manner for any personal injury or property damage or a loss of any kind arising from or connected with this inspection.

Inspector's Signature *Commissions* 10655W A, B, N, I
National Board, State, and Endorsements

Date 3/17/2005

WOT No. 01062290 44

FORM N-2 NPT CERTIFICATE HOLDERS' DATA REPORT FOR NUCLEAR PART AND APPURTENANCES*

As required by the Provision of the ASME Code Rules, Section III, Div. 1

1. Manufactured & Certified by : General Electric Company Nuclear Fuel & Components Manufacturing (GE NF & CM)

   2117 Castle Hayne Road, Wilmington, North Carolina 28401

   (Name and Address of NPT Certificate Holder)

   (b) Manufactured for : WNP 2 Richland, Washington 99352

   (Name and Address of N Certificate Holder for completed nuclear component)

2. Identification - Certificate Holder's S/N of Part : A9448 Nat'l Bd. No. N/A

   (a) Constructed According to Drawing No: 919D258G003 Rev 18 Dwg. Prepared by D. L. Peterson

   (b) Description of Part Inspected: Cylinder Tube & Flange

   (c) Applicable ASME Code: Section III , Edition 1974 , Addenda Date W'75 , Case No. 1361-2 Class 1

3. REMARKS: Standard part for use with Reactor. Hydrostatically tested at 1825 psi. min.

   (Brief description of service for which component was designed)

Sheet 1 of 2

We certify that the statements in this report are correct and this vessel part or appurtenance as defined in the code conforms to the rules of construction of the ASME Code Section III. (The applicable Designed Specification and Stress Report are not the responsibility of the NPT Certificate Holder for parts. An NPT Certification Holder for appurtenances is responsible for furnishing a separate Design Specification and Stress Report if the appurtenance is not included in the component Design Specification and Stress Report).

Date: 06/27/95 Signed GE - NEBG - NF & CM - QA By

(NPT Certificate Holder) (SC QA Representive)

Certificate of Authorization Expires: 6/16/96 Certification of Authorization No. : NPT N - 1151

Certification of Design for Appurtenance

Design information on file at GE Company, San Jose, California

Stress analysis report on file at GE Company, San Jose, California

DC22A6253 Rev. 1
Design specification certified by Bjorn Haaberg Prof. Eng. State Calif. Reg. No. 15570

DC22A6254 Rev 1
Stress analysis report certified by Edward Yoshio Prof. Eng. State Calif. Reg. No. M018646

Certification of Shop Inspection

I, the undersigned, holding a valid commission by the National Board of Boiler and Pressure Inspectors and/or the State or Province of North Carolina and employed by Department of Labor of State of North Carolina have inspected the part of a pressure vessel described in this Partial Data Report on 6/26, 1995, and state that to the best of my knowledge and belief, the NPT Certificate Holder has constructed this part in accordance with the ASME Code Section III.

By signing this certificate, neither the Inspector nor his employer makes any warranty, expressed or implied, concerning the part described in the Partial Data Report. Furthermore, neither the Inspector nor his employer shall be liable in any manner for any personal injury or property damages or a loss of any kind arising from or connected with this inspection.

6/27, 1995 — Date

Inspector's Signature

NC 1231, Ohio, WC 3686 PA — National Board, State, Province And No.

*Supplemental sheets in form of lists, sketches or drawing may be used provided (1) size is 8-1/2" x 11", (2) information in 1-2 on this Data Report is included on each sheet, and (3) each sheet is numbered and number of sheets is recorded in Item 3. "REMARKS".

(07/90)

FORM N-2 (back)

Items 4-8 Incl. to be completed for single wall vessels, jackets vessels, or shells of heat exchangers.

4. Shell: Material _____ T.S. _____ Nominal Thickness ___ in. Corrosion Allowance ___ in. Dia. ___ ft. ___ in. Length ___ ft. ___
(Kind & Spec. No.) (Min. of Range Specified)

5. Seams: Long _____ H.T.[1] _____ R.T. _____ Efficiency _____%
Girth _____ H.T.[1] _____ R.T. _____ No. of Courses _____

6. Heads: (a) Material _____ T.S. _____ (b) Material _____ T.S. _____

	Location (Top Bottom, Ends)	Thickness	Crown Radius	Knuckle Radius	Elliptical Ratio	Concial Apex Angle	Hemispherical Radius	Flat Diameter	Side to Press. (conv. or conc.)
(a)									
(b)									

If removable, bolts used _____ (Material, Spec. No., T.S. Size Number) Other fastening _____ (Describe or attach sketch)

7. Jacket Closure: _____
(Describe as ogee and weld, bar, etc. If bar give dimensions, if bolts, describe or sketch)

Drop Weight _____
Charpy Impact _____ ft-lb

8. Design pressure[2] 1250 psi at 575 °F at temp of _____ °F

Items 9 and 10 to be completed for tube sections

9. Tube Sheets: Stationary. Material _____ (Kind & Spec. No.) Dia. _____ (Subject to pressure) Thickness ___ in. Attachment _____ (Welded, Bolted)
Floating. Material _____ Dia. _____ Thickness ___ in. Attachment _____

10. Tubes: Material _____ O.D. _____ in. Thickness _____ inches or gage. Number _____ Type _____ (Str. or U)

Items 11 - 14 incl. to be completed for inner chambers of jacketed vessels, or channels of heat exchangers.

11. Shell: Material _____ T.S. _____ Nominal Thickness ___ in. Corrosion Allowance ___ in. Dia. ___ ft. ___ in. Length ___ ft. ___
(Kind & Spec. No.) (Min. of Range Specified)

12. Seams: Long _____ H.T.[1] _____ R.T. _____ Efficiency _____%
Girth _____ H.T.[1] _____ R.T. _____ No. of Courses _____

13. Heads: (a) Material _____ T.S. _____ (b) Material _____ T.S. _____

	Location	Thickness	Crown Radius	Knuckle Radius	Elliptical Ratio	Concial Apex Angle	Hemispherical Radius	Flat Diameter	Side to Press. (conv. or conc.)
(a)	Top, bottom, ends								
(b)	Channel								

If removable, bolts used (a)_____ (b)_____ (c)_____ Other fastening _____ (Describe or attach sketch)

Drop Weight _____
Charpy Impact _____ ft-lb

14. Design pressure[2] _____ psi at _____ °F at temp of _____ °F

Items below to be completed for all vessels where applicable.

15. Safety Valve Outlets: Number _____ Size _____ Location _____

16. Nozzles:

Purpose (Inlet, Outlet, Drain)	Number	Dia. or Size	Type	Material	Thickness	Reinforcement Material	How Attached

17. Inspection Openings: Manholes, No. _____ Size _____ Location _____
Handholes, No. _____ Size _____ Location _____
Threaded, No. _____ Size _____ Location _____

18. Supports: Skirt _____ (Yes or No) Lugs _____ (Number) Legs _____ (Number) Other _____ (Describe) Attached _____ (Where & How)

1 - If Postweld Heat-Treated.
2 - List other internal or external pressure with coincident temperature when applicable.

FORM N-2 NPT CERTIFICATE ..JLDERS' DATA REPORT FOR NUCLEAR ART AND APPURTENANCES*
As required by the Provision of the ASME Code Rules, Section III, Div. I

WOT No. 0166 2290 44

1. Manufactured & Certified by : General Electric Company Nuclear Fuel & Components Manufacturing (GE NF & CM)
2117 Castle Hayne Road, Wilmington, North Carolina 28401
(Name and Address of NPT Certificate Holder)

(b) Manufactured for : WNP 2 Richland, Washington 99352
(Name and Address of N Certificate Holder for completed nuclear component)

2. Identification - Certificate Holder's S/N of Part : A9448 Nat'l Bd. No. N/A

(a) Constructed According to Drawing No: 919D258G003 Rev 18 Dwg. Prepared by D. L. Peterson

(b) Description of Part Inspected: Cylinder Tube & Flange

(c) Applicable ASME Code: Section III , Edition 1974 , Addenda Date W'75 , Case No. 1361-2 Class 1

3. REMARKS: Standard part for use with Reactor. Hydrostatically tested at 1825 psi. min.
(Brief description of service for which component was designed)

Sheet 2 of 2

1. Cap 166B9274P001
SA182 - F316
3/8" thick x 1 1/16" OD

2. Indicator Tube 167B4908P001
SA312 - TP316
3/4" sch 40 - seamless pipe
0.113" wall thickness
1.065" max. dia.

3. Plug 159A1176P001
SA182 - F304
1/4" thick x 0.812" OD

4. Flange 919D610P001 (719E474)
SA182 - F304
3.37" thick x 9 5/8" OD

5. Head 129B3539P005
SA182 - F304
7/8" thick x 2.875" dia.

6. Ring Flange 114B5122P002
SA182 - F304
1" thick x 5.0" OD x 1.75" ID

7. Cap Screw 117C4516P002
SA193 - B6
6 ea. 1/2" dia. on 4 1/8" bolt circle

8. Plug 175A7961P001
SA182 - F304
0.38" thick x 1.307" dia.

9. Nut 114B5460P001
XM - 19 SA479
1.30" thick x 2.62" dia.

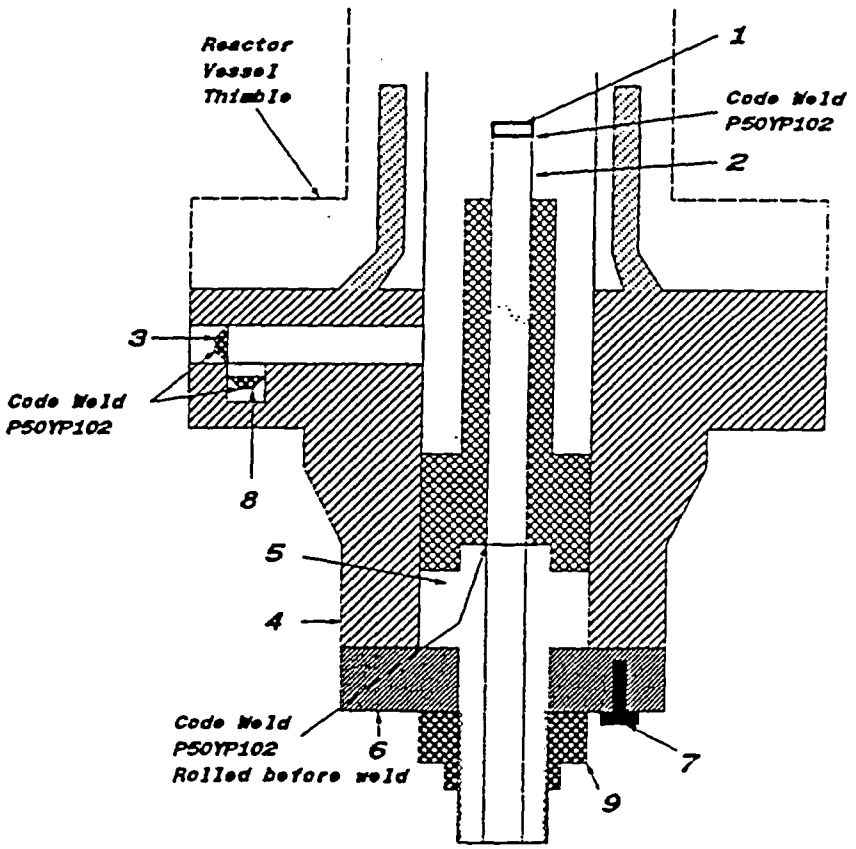

WOT No 01062290 45

ENERGY NORTHWEST
People·Vision·Solutions

FORM NIS-2 OWNER'S REPORT FOR REPAIRS OR REPLACEMENTS
As Required By The Provisions Of The ASME Code Section XI

1. Owner: Energy Northwest
Address: Columbia Generating Station, North Power Plant Loop, Richland, Washington, 99352
2. Plant: Columbia Generating Station
Address: Columbia Generating Station, North Power Plant Loop, Richland, Washington, 99352

Date: 01/05/05
Sheet: 1 Of 1
Unit: Not Applicable

3. (a) Work Performed By: Energy Northwest
(b) Repair Organization P.O. No, Job No, etc.: Energy Northwest
(c) Type Code Symbol Stamp: Not Applicable
(d) Certificate Of Authorization No.: Not Applicable
(e) Expiration Date: Not Applicable
4. Identification Of System: Control Rod Drive (CRD)
5. (a) Applicable Construction Code: ASME Section III, Code Class 1 - See Notes For Code Edition, Addenda And Code Cases
(b) Applicable Edition Of ASME Section XI Utilized For Repairs Or Replacements: 1989 Edition with no Addenda, Code Case: None
6. Identification Of Components Repaired Or Replaced And Replacement Components

Name Of Component	Name Of Manufacturer	Manufacturer's Serial No	National Board No	Other I.D.	Year Built	Repaired, Replaced Or Replacement	ASME Code Stamped (Yes Or No) Code Class
CRD	General Electric	5934	N/A	N/A	1975	----------	Yes, Code Class 1
CT&F	General Electric	5934	N/A	N/A	1975	Replaced	Yes, Code Class 1
CT&F	General Electric	A9547	N/A	N/A	1995	Replacement	Yes, Code Class 1

7. Description Of Work Performed: Overhauled Control Rod Drive (CRD) assembly Serial No 5934. The overhaul work was performed in accordance with plant procedure PPM No 10.5.4 "Control Rod Drive Overhaul" as follows:

1) Disassembled Control Rod Drive (CRD) assembly for overhaul.
2) Performed liquid penetrant (PT) examination on the existing Cylinder Tube And Flange (CT&F) assembly Serial No 5934. Liquid penetrant (PT) examination results unacceptable.
3) Performed VT-3 visual examination on the existing ring flange cap screws. VT-3 visual examination results acceptable.
4) Performed VT-3 visual examination on the existing piston tube nut Serial No 2882. VT-3 visual examination results acceptable.
5) Installed replacement Cylinder Tube And Flange (CT&F) assembly Serial No A9547.
6) Reinstalled existing Piston Tube (PT) assembly Serial No 4453.
7) Reinstalled existing ring flange Serial No 2095.
8) Reinstalled VT-3 visually examined existing piston tube nut Serial No 2882.
9) Reinstalled VT-3 visually examined existing ring flange cap screws.

NOTES -

1) ASME Section III Code Cases are as listed on the N-2 Code Data Report for the Control Rod Drive (CRD) assembly Serial No A9547.
2) The existing Cylinder Tube And Flange (CT&F) assembly Serial No 5934 is certified to comply with ASME Section III, Code Class 1, 1971 Edition with no Addenda.
3) ASME pressure boundary (retaining) parts and materials such as Piston Tube (PT) assembly, ring flange, ring flange cap screws and piston tube nut were reused during CRD overhaul activities with the exception of Cylinder Tube And Flange (CT&F) assembly which was replaced.
4) The replacement Cylinder Tube And Flange (CT&F) assembly Serial No A9547 is certified to comply with ASME Section III, Code Class 1, 1974 Edition with Winter 1975 Addenda.
5) The entire Control Rod Drive (CRD) assembly is identified by the Cylinder Tube And Flange (CT&F) Serial No A9547.

WOT No 01062290 45

ENERGY NORTHWEST
People·Vision·Solutions

FORM NIS-2 OWNER'S REPORT FOR REPAIRS OR REPLACEMENTS (Back)

8 Tests Conducted: Hydrostatic [ ] *Pneumatic* [ ] *Nominal Operating Pressure* [ ] *None* [X]
Test Pressure: Psig *Test Temperature:* °F
Component Design Pressure: Psig *Temperature:* °F

9. Remarks (Applicable Manufacturer's Data Reports to be attached): See attached N-2 Code Data Report for the replacement Cylinder Tube And Flange (CT&F) assembly Serial No A9547.

CERTIFICATE OF COMPLIANCE

We certify that the statements made in this Owner's Report are correct and this replacement *conforms to the rules of the ASME Code, Section XI.*
Type Code Symbol Stamp: Not Applicable
Certificate Of Authorization No.: Not Applicable
Expiration Date: Not Applicable

Prepared By Kuldip Singh *Signed By* Kuldip Singh
Kuldip Singh - Program Lead Engineer (PLE) Kuldip Singh - Program Lead Engineer (PLE)
Date 1/14/05 *Date* 1/14/05

CERTIFICATE OF INSERVICE INSPECTION

I, the undersigned, holding a valid commission issued by the National Board of Boiler and Pressure Vessel Inspectors and the State of Washington *and employed by* Hartford Steam Boiler Of Connecticut of Hartford, Connecticut *have inspected the components described in this Owner's Report during the period* 7/26/2004 *to* 3/17/2005 *and state to the best of my knowledge and belief, the Owner has performed examinations and taken corrective measures described in this Owner's Report in accordance with the requirements of the ASME Code, Section XI.*
By signing this certificate neither the Inspector nor his employer makes any warranty, expressed or implied, concerning the examinations and corrective measures described in this Owner's Report. Furthermore, neither the Inspector nor his employer shall be liable in any manner for any personal injury or property damage or a loss of any kind arising from or connected with this inspection.

Inspector's Signature *Commissions* 10655W A, B, N, I
National Board, State, and Endorsements

Date 3/17/2005

WOT NO. 01062290 45

FORM N-2 NPT CERTIFICATE HOLDERS' DATA REPORT FOR NUCLEAR PART AND APPURTENANCES*

As required by the Provision of the ASME Code Rules, Section III, Div. I

1. Manufactured & Certified by : General Electric Company Nuclear Fuel & Components Manufacturing (GE NF & CM)
   2117 Castle Hayne Road, Wilmington, North Carolina 28401
   (Name and Address of NPT Certificate Holder)

   (b) Manufactured for : WNP 2 Richland, Washington 99352
   (Name and Address of N Certificate Holder for completed nuclear component)

2. Identification - Certificate Holder's S/N of Part : A9547 Nat'l Bd. No. N/A

   (a) Constructed According to Drawing No: 919D258G003 Rev 18 Dwg. Prepared by D. L. Peterson

   (b) Description of Part Inspected: Cylinder Tube & Flange

   (c) Applicable ASME Code: Section III , Edition 1974 , Addenda Date W'75 , Case No. 1361-2 Class 1

3. REMARKS: Standard part for use with Reactor. Hydrostatically tested at 1825 psi. min.
   (Brief description of service for which component was designed)

Sheet 1 of 2

We certify that the statements in this report are correct and this vessel part or appurtenance as defined in the code conforms to the rules of construction of the ASME Code Section III. (The applicable Designed Specification and Stress Report are not the responsibility of the NPT Certificate Holder for parts. An NPT Certification Holder for appurtenances is responsible for furnishing a separate Design Specification and Stress Report if the appurtenance is not included in the component Design Specification and Stress Report).

Date: 06/27/95 Signed GE - NEBG - NF & CM - QA By
(NPT Certificate Holder) (SC QA Representive)

Certificate of Authorization Expires: 6/16/96 Certification of Authorization No. : NPT N - 1151

Certification of Design for Appurtenance

Design information on file at GE Company, San Jose, California

Stress analysis report on file at GE Company, San Jose, California

DC22A6253 Rev. 1
Design specification certified by Bjorn Haaberg Prof. Eng. State Calif. Reg. No. 15570

DC22A6254 Rev 1
Stress analysis report certified by Edward Yoshio Prof. Eng. State Calif. Reg. No. M018646

Certification of Shop Inspection

I, the undersigned, holding a valid commission by the National Board of Boiler and Pressure Inspectors and/or the State or Province of North Carolina and employed by Department of Labor of State of North Carolina have inspected the part of a pressure vessel described in this Partial Data Report on 5/16, 1995, and state that to the best of my knowledge and belief, the NPT Certificate Holder has constructed this part in accordance with the ASME Code Section III.
By signing this certificate, neither the Inspector nor his employer makes any warranty, expressed or implied, concerning the part described in the Partial Data Report. Furthermore, neither the Inspector nor his employer shall be liable in any manner for any personal injury or property damages or a loss of any kind arising from or connected with this inspection.

6/27, 1995 — Date
Jerome P Ewers — Inspector's Signature
NC 1231, Ohio, WC 3686 PA — National Board, State, Province And No.

*Supplemental sheets in form of lists, sketches or drawing may be used provided (1) size is 8-1/2" x 11", (2) information in 1-2 on this Data Report is included on each sheet, and (3) each sheet is numbered and number of sheets is recorded in Item 3. "REMARKS".

(07/90)

FORM N-2 (back)

Items 4-8 Incl. to be completed for single wall vessels, jackets vessels, or shells of heat exchangers.

4. Shell: Material _____ T.S. _____ Nominal Thickness ___ in. Corrosion Allowance ___ in. Dia. ___ ft. ___ in. Length ___ ft. ___ in.
(Kind & Spec. No.) (Min. of Range Specified)

5. Seams: Long _____ H.T.[1] _____ R.T. _____ Efficiency _____%
Girth _____ H.T.[1] _____ R.T. _____ No. of Courses _____

6. Heads: (a) Material _____ T.S. _____ (b) Material _____ T.S. _____

	Location (Top Bottom, Ends)	Thickness	Crown Radius	Knuckle Radius	Elliptical Ratio	Concial Apex Angle	Hemispherical Radius	Flat Diameter	Side to Press. (conv. or conc.)
(a)									
(b)									

If removable, bolts used _____ (Material, Spec. No., T.S. Size Number) Other fastening _____ (Describe or attach sketch)

7. Jacket Closure: _____
(Describe as ogee and weld, bar, etc. If bar give dimensions, if bolts, describe or sketch)

Drop Weight _____
Charpy Impact _____ ft-lb

8. Design pressure[2] 1250 psi at 575 °F at temp of _____ °F

Items 9 and 10 to be completed for tube sections

9. Tube Sheets: Stationary. Material _____ (Kind & Spec. No.) Dia. _____ (Subject to pressure) Thickness ___ in. Attachment _____ (Welded, Bolted)
Floating. Material _____ Dia. _____ Thickness ___ in. Attachment _____

10. Tubes: Material _____ O.D. _____ in. Thickness _____ inches or gage. Number _____ Type _____ (Str. or U)

Items 11 - 14 incl. to be completed for inner chambers of jacketed vessels, or channels of heat exchangers.

11. Shell: Material _____ T.S. _____ Nominal Thickness ___ in. Corrosion Allowance ___ in. Dia. ___ ft. ___ in. Length ___ ft. ___ in.
(Kind & Spec. No.) (Min. of Range Specified)

12. Seams: Long _____ H.T.[1] _____ R.T. _____ Efficiency _____%
Girth _____ H.T.[1] _____ R.T. _____ No. of Courses _____

13. Heads: (a) Material _____ T.S. _____ (b) Material _____ T.S. _____

	Location	Thickness	Crown Radius	Knuckle Radius	Elliptical Ratio	Concial Apex Angle	Hemispherical Radius	Flat Diameter	Side to Press. (conv. or conc.)
(a)	Top, bottom, ends								
(b)	Channel								

If removable, bolts used (a)_____(b)_____(c)_____ Other fastening _____ (Describe or attach sketch)

Drop Weight _____
Charpy Impact _____ ft-lb

14. Design pressure[2] _____ psi at _____ °F at temp of _____ °F

Items below to be completed for all vessels where applicable.

15. Safety Valve Outlets: Number _____ Size _____ Location _____

16. Nozzles:

Purpose (Inlet, Outlet, Drain)	Number	Dia. or Size	Type	Material	Thickness	Reinforcement Material	How Attached

17. Inspection Openings: Manholes, No. _____ Size _____ Location _____
Handholes, No. _____ Size _____ Location _____
Threaded, No. _____ Size _____ Location _____

18. Supports: Skirt _____ (Yes or No) Lugs _____ (Number) Legs _____ (Number) Other _____ (Describe) Attached _____ (Where & How)

1 - If Postweld Heat-Treated.
2 - List other internal or external pressure with coincident temperature when applicable.

FORM N-2 NPT CERTIFICATE HOLDERS' DATA REPORT FOR NUCLEAR PART AND APPURTENANCES*
As required by the Provision of the ASME Code Rules, Section III, Div. I

WOT No. 01062290 45

Manufactured & Certified by : General Electric Company Nuclear Fuel & Components Manufacturing (GE NF & CM)
2117 Castle Hayne Road, Wilmington, North Carolina 28401
(Name and Address of NPT Certificate Holder)

(b) Manufactured for : WNP 2 Richland, Washington 99352
(Name and Address of N Certificate Holder for completed nuclear component)

2. Identification - Certificate Holder's S/N of Part : A9547 Nat'l Bd. No. N/A

(a) Constructed According to Drawing No: 919D258G003 Rev 18 Dwg. Prepared by D. L. Peterson

(b) Description of Part Inspected: Cylinder Tube & Flange

(c) Applicable ASME Code: Section III , Edition 1974 , Addenda Date W'75 , Case No. 1361-2 Class 1

3. REMARKS: Standard part for use with Reactor. Hydrostatically tested at 1825 psi. min.
(Brief description of service for which component was designed)

1. Cap 166B9274P001
   SA182 - F316
   3/8" thick x 1 1/16" OD

2. Indicator Tube 167B4908P001
   SA312 - TP316
   3/4" sch 40 - seamless pipe
   0.113" wall thickness
   1.065" max. dia.

3. Plug 159A1176P001
   SA182 - F304
   1/4" thick x 0.812" OD

4. Flange 919D610P001 (719E474)
   SA182 - F304
   3.37" thick x 9 5/8" OD

5. Head 129B3539P005
   SA182 - F304
   7/8" thick x 2.875" dia.

6. Ring Flange 114B5122P002
   SA182 - F304
   1" thick x 5.0" OD x 1.75" ID

7. Cap Screw 117C4516P002
   SA193 - B6
   6 ea. 1/2" dia. on 4 1/8" bolt circle

8. Plug 175A7961P001
   SA182 - F304
   0.38" thick x 1.307" dia.

9. Nut 114B5460P001
   XM - 19 SA479
   1.30" thick x 2.62" dia.

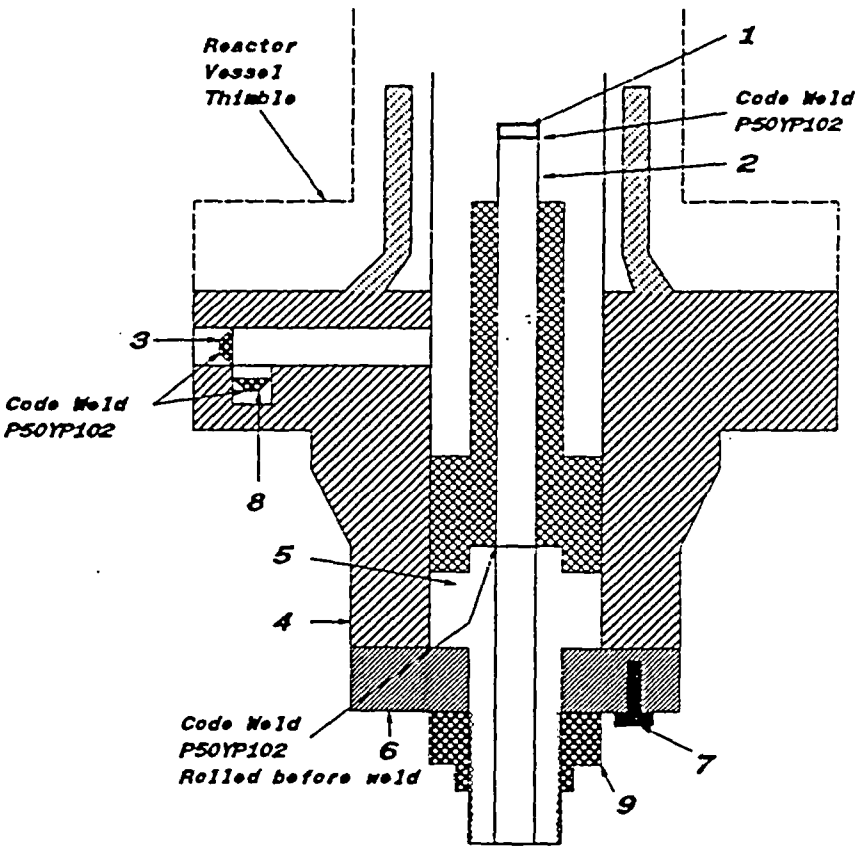

WOT No 01062290 46

ENERGY NORTHWEST
People·Vision·Solutions

FORM NIS-2 OWNER'S REPORT FOR REPAIRS OR REPLACEMENTS
As Required By The Provisions Of The ASME Code Section XI

1. Owner: Energy Northwest
Address: Columbia Generating Station, North Power Plant Loop, Richland, Washington, 99352
2. Plant: Columbia Generating Station
Address: Columbia Generating Station, North Power Plant Loop, Richland, Washington, 99352

Date: 03/21/05
Sheet: 1 Of 1
Unit: Not Applicable

3. (a) Work Performed By: Energy Northwest
(b) Repair Organization P.O. No, Job No, etc.: Energy Northwest
(c) Type Code Symbol Stamp: Not Applicable
(d) Certificate Of Authorization No.: Not Applicable
(e) Expiration Date: Not Applicable
4. Identification Of System: Control Rod Drive (CRD)
5. (a) Applicable Construction Code: ASME Section III, Code Class 1 - See Notes For Code Edition, Addenda And Code Cases
(b) Applicable Edition Of ASME Section XI Utilized For Repairs Or Replacements: 1989 Edition with no Addenda, Code Case: None
6. Identification Of Components Repaired Or Replaced And Replacement Components

Name Of Component	Name Of Manufacturer	Manufacturer's Serial No	National Board No	Other I.D.	Year Built	Repaired, Replaced Or Replacement	ASME Code Stamped (Yes Or No) Code Class
CRD	General Electric	5706	N/A	N/A	1974	----------	Yes, Code Class 1
CT&F	General Electric	5706	N/A	N/A	1974	Replaced	Yes, Code Class 1
CT&F	General Electric	A9419	N/A	N/A	1995	Replacement	Yes, Code Class 1

7. Description Of Work Performed: Overhauled Control Rod Drive (CRD) assembly Serial No 5706. The overhaul work was performed in accordance with plant procedure PPM No 10.5.4 "Control Rod Drive Overhaul" as follows:

1) Disassembled Control Rod Drive (CRD) assembly for overhaul.
2) Performed liquid penetrant (PT) examination on the existing Cylinder Tube And Flange (CT&F) assembly Serial No 5706. Liquid penetrant (PT) examination results unacceptable.
3) Performed VT-1 visual examination on the replacement ring flange cap screws. VT-1 visual examination results acceptable.
4) Performed VT-1 visual examination on the replacement piston tube nut Serial No 6430. VT-1 visual examination results acceptable.
5) Installed replacement Cylinder Tube And Flange (CT&F) assembly Serial No A9419.
6) Reinstalled existing Piston Tube (PT) assembly Serial No 5624.
7) Installed replacement ring flange Serial No A5415.
8) Installed VT-1 visually examined replacement piston tube nut Serial No 6430.
9) Installed VT-1 visually examined replacement ring flange cap screws.

NOTES -

1) ASME Section III Code Cases are as listed on the N-2 Code Data Report for the Control Rod Drive (CRD) assembly Serial No A9419.
2) The existing Cylinder Tube And Flange (CT&F) assembly Serial No 5706 is certified to comply with ASME Section III, Code Class 1, 1974 Edition with no Addenda.
3) All ASME pressure boundary (retaining) parts and materials such as Cylinder Tube And Flange (CT&F) assembly, ring flange, ring flange cap screws and piston tube nut were replaced during CRD overhaul activities with the exception of Piston Tube (PT) assembly which was reused.
4) The replacement Cylinder Tube And Flange (CT&F) assembly Serial No A9419 is certified to comply with ASME Section III, Code Class 1, 1974 Edition with Winter 1975 Addenda.
5) The entire Control Rod Drive (CRD) assembly is identified by the Cylinder Tube And Flange (CT&F) Serial No A9419.

WOT No 01062290 46

ENERGY NORTHWEST
People·Vision·Solutions

FORM NIS-2 OWNER'S REPORT FOR REPAIRS OR REPLACEMENTS (Back)

8 Tests Conducted: Hydrostatic [ ] *Pneumatic* [ ] *Nominal Operating Pressure* [ ] *None* [X]
Test Pressure: Psig *Test Temperature:* °F
Component Design Pressure: Psig *Temperature:* °F

9. Remarks (Applicable Manufacturer's Data Reports to be attached): See attached N-2 Code Data Report for the replacement Cylinder Tube And Flange (CT&F) assembly Serial No A9419.

CERTIFICATE OF COMPLIANCE

We certify that the statements made in this Owner's Report are correct and this replacement *conforms to the rules of the ASME Code, Section XI.*
Type Code Symbol Stamp: Not Applicable
Certificate Of Authorization No.: Not Applicable
Expiration Date: Not Applicable

Prepared By Kuldip Singh - Program Lead Engineer (PLE) *Signed By* Kuldip Singh - Program Lead Engineer (PLE)

Date 3/21/05 *Date* 3/21/05

CERTIFICATE OF INSERVICE INSPECTION

I, the undersigned, holding a valid commission issued by the National Board of Boiler and Pressure Vessel Inspectors and the State of Washington *and employed by* Hartford Steam Boiler Of Connecticut of Hartford, Connecticut *have inspected the components described in this Owner's Report during the period* 7/26/2004 *to* 3/22/2005 *and state to the best of my knowledge and belief, the Owner has performed examinations and taken corrective measures described in this Owner's Report in accordance with the requirements of the ASME Code, Section XI.*
By signing this certificate neither the Inspector nor his employer makes any warranty, expressed or implied, concerning the examinations and corrective measures described in this Owner's Report. Furthermore, neither the Inspector nor his employer shall be liable in any manner for any personal injury or property damage or a loss of any kind arising from or connected with this inspection.

Inspector's Signature *Commissions* 10655W A,B,N,E
National Board, State, and Endorsements

Date 3/22/2005

WOT No. 01062290 46

FORM N-2 NPT CERTIFICATE HOLDERS' DATA REPORT FOR NUCLEAR PART AND APPURTENANCES*

As required by the Provision of the ASME Code Rules, Section III, Div. I

1. Manufactured & Certified by : General Electric Company Nuclear Energy (GE-NE)
   3901 Castle Hayne Road, Wilmington, North Carolina 28401
   (Name and Address of NPT Certificate Holder)

   (b) Manufactured for : WNP 2 Richland, Washington 99352
   (Name and Address of N Certificate Holder for completed nuclear component)

2. Identification - Certificate Holder's S/N of Part : A9419 Nat'l Bd. No. N/A

   (a) Constructed According to Drawing No: 919D258G003 Rev 18 Dwg. Prepared by D. L. Peterson

   (b) Description of Part Inspected: Cylinder Tube & Flange

   (c) Applicable ASME Code: Section III , Edition 1974 , Addenda Date W'75 , Case No. 1361-2 Class 1

3. REMARKS: Standard part for use with Reactor. Hydrostatically tested at 1825 psi. min.
   (Brief description of service for which component was designed)

Sheet 1 of 2

We certify that the statements in this report are correct and this vessel part or appurtenance as defined in the code conforms to the rules of construction of the ASME Code Section III. (The applicable Designed Specification and Stress Report are not the responsibility of the NPT Certificate Holder for parts. An NPT Certification Holder for appurtenances is responsible for furnishing a separate Design Specification and Stress Report if the appurtenance is not included in the component Design Specification and Stress Report).

Date: 04/02/96 Signed GE-NE (NPT Certificate Holder) By [signature] (SC QA Representive)

Certificate of Authorization Expires: 6/16/96 Certification of Authorization No. : NPT N - 1151

Certification of Design for Appurtenance

Design information on file at GE Company, San Jose, California

Stress analysis report on file at GE Company, San Jose, California

DC22A6253 Rev. 2
Design specification certified by B.N. Sridhar Prof. Eng. State Calif. Reg. No. 18345

DC22A6254 Rev 1
Stress analysis report certified by Edward Yoshio Prof. Eng. State Calif. Reg. No. M018646

Certification of Shop Inspection

I, the undersigned, holding a valid commission by the National Board of Boiler and Pressure Inspectors and/or the State or Province of North Carolina and employed by Department of Labor of State of North Carolina have inspected the part of a pressure vessel described in this Partial Data Report on 11/14, 1995, and state that to the best of my knowledge and belief, the NPT Certificate Holder has constructed this part in accordance with the ASME Code Section III.
By signing this certificate, neither the Inspector nor his employer makes any warranty, expressed or implied, concerning the part described in the Partial Data Report. Furthermore, neither the Inspector nor his employer shall be liable in any manner for any personal injury or property damages or a loss of any kind arising from or connected with this inspection.

4/2, 1996	Jerome P Ewen	NC 1231, Ohio, WC 3686 PA
Date	Inspector's Signature	National Board, State, Province And No.

*Supplemental sheets in form of lists, sketches or drawing may be used provided (1) size is 8-1/2" x 11", (2) information in 1-2 on this Data Report is included on each sheet, and (3) each sheet is numbered and number of sheets is recorded in Item 3. "REMARKS".

(07/90)

FORM N-2 (back)

Items 4-8 Incl. to be completed for single wall vessels, jackets vessels, or shells of heat exchangers.

4. Shell: Material _____ T.S. _____ Nominal Thickness ___ in. Corrosion Allowance ___ in. Dia. ___ ft. ___ in. Length ___ ft. ___ in.
(Kind & Spec. No.) (Min. of Range Specified)

5. Seams: Long _____ H.T.[1] _____ R.T. _____ Efficiency _____
Girth _____ H.T.[1] _____ R.T. _____ No. of Courses _____

6. Heads: (a) Material _____ T.S. _____ (b) Material _____ T.S. _____

	Location (Top Bottom, Ends)	Thickness	Crown Radius	Knuckle Radius	Elliptical Ratio	Concial Apex Angle	Hemispherical Radius	Flat Diameter	Side to Press. (conv. or conc.)
(a)									
(b)									

If removable, bolts used _____ (Material, Spec. No., T.S. Size Number) Other fastening _____ (Describe or attach sketch)

7. Jacket Closure: _____
(Describe as ogee and weld, bar, etc. If bar give dimensions, if bolts, describe or sketch)

Drop Weight _____
Charpy Impact _____ ft-lb

8. Design pressure[2] 1250 psi at 575 °F at temp of _____ °F

Items 9 and 10 to be completed for tube sections

9. Tube Sheets: Stationary. Material _____ (Kind & Spec. No.) Dia. _____ (Subject to pressure) Thickness ___ in. Attachment _____ (Welded, Bolted)
Floating. Material _____ Dia. _____ Thickness ___ in. Attachment _____

10. Tubes: Material _____ O.D. _____ in. Thickness _____ inches or gage. Number _____ Type _____ (Str. or U)

Items 11 - 14 incl. to be completed for inner chambers of jacketed vessels, or channels of heat exchangers.

11. Shell: Material _____ T.S. _____ Nominal Thickness ___ in. Corrosion Allowance ___ in. Dia. ___ ft. ___ in. Length ___ ft. ___ in.
(Kind & Spec. No.) (Min. of Range Specified)

12. Seams: Long _____ H.T.[1] _____ R.T. _____ Efficiency _____
Girth _____ H.T.[1] _____ R.T. _____ No. of Courses _____

13. Heads: (a) Material _____ T.S. _____ (b) Material _____ T.S. _____

	Location	Thickness	Crown Radius	Knuckle Radius	Elliptical Ratio	Concial Apex Angle	Hemispherical Radius	Flat Diameter	Side to Press. (conv. or conc.)
(a)	Top, bottom, ends								
(b)	Channel								

If removable, bolts used (a)_____ (b)_____ (c)_____ Other fastening _____ (Describe or attach sketch)

Drop Weight _____
Charpy Impact _____ ft-lb

14. Design pressure[2] _____ psi at _____ °F at temp of _____ °F

Items below to be completed for all vessels where applicable.

15. Safety Valve Outlets: Number _____ Size _____ Location _____

16. Nozzles:

Purpose (Inlet, Outlet, Drain)	Number	Dia. or Size	Type	Material	Thickness	Reinforcement Material	How Attached

17. Inspection Openings: Manholes, No. _____ Size _____ Location _____
Handholes, No. _____ Size _____ Location _____
Threaded, No. _____ Size _____ Location _____

18. Supports: Skirt _____ (Yes or No) Lugs _____ (Number) Legs _____ (Number) Other _____ (Describe) Attached _____ (Where & How)

1 - If Postweld Heat-Treated.
2 - List other internal or external pressure with coincident temperature when applicable.

FORM N-2 NPT CERTIFICATE HOLDERS' DATA REPORT FOR NUCLEAR PART AND APPURTENANCES*

As required by the Provision of the ASME Code Rules, Section III, Div. I

WOT No. 01062290 4-6

Manufactured & Certified by : General Electric Company Nuclear Energy (GE-NE)

3901 Castle Hayne Road, Wilmington, North Carolina 28401

(Name and Address of NPT Certificate Holder)

(b) Manufactured for : WNP 2 . Richland, Washington 99352

(Name and Address of N Certificate Holder for completed nuclear component)

2. Identification - Certificate Holder's S/N of Part : A9419 Nat'l Bd. No. N/A

(a) Constructed According to Drawing No: 919D258G003 Rev 18 Dwg. Prepared by D. L. Peterson

(b) Description of Part Inspected: Cylinder Tube & Flange

(c) Applicable ASME Code: Section III , Edition 1974 , Addenda Date W'75 , Case No. 1361-2 Class 1

3. REMARKS: Standard part for use with Reactor. Hydrostatically tested at 1825 psi. min.

(Brief description of service for which component was designed)

1. Cap 166B9274P001
   SA182 - F316
   3/8" thick x 1 1/16" OD

2. Indicator Tube 167B4908P001
   SA312 - TP316
   3/4" sch 40 - seamless pipe
   0.113" wall thickness
   1.065" max. dia.

3. Plug 159A1176P001
   SA182 - F304
   1/4" thick x 0.812" OD

4. Flange 919D610P001 (719E474)
   SA182 - F304
   3.37" thick x 9 5/8" OD

5. Head 129B3539P005
   SA182 - F304
   7/8" thick x 2.875" dia.

6. Ring Flange 114B5122P002
   SA182 - F304
   1" thick x 5.0" OD x 1.75" ID

7. Cap Screw 117C4516P002
   SA193 - B6
   6 ea. 1/2" dia. on 4 1/8" bolt circle

8. Plug 175A7961P001
   SA182 - F304
   0.38" thick x 1.307" dia.

9. Nut 114B5460P001
   XM - 19 SA479
   1.30" thick x 2.62" dia.

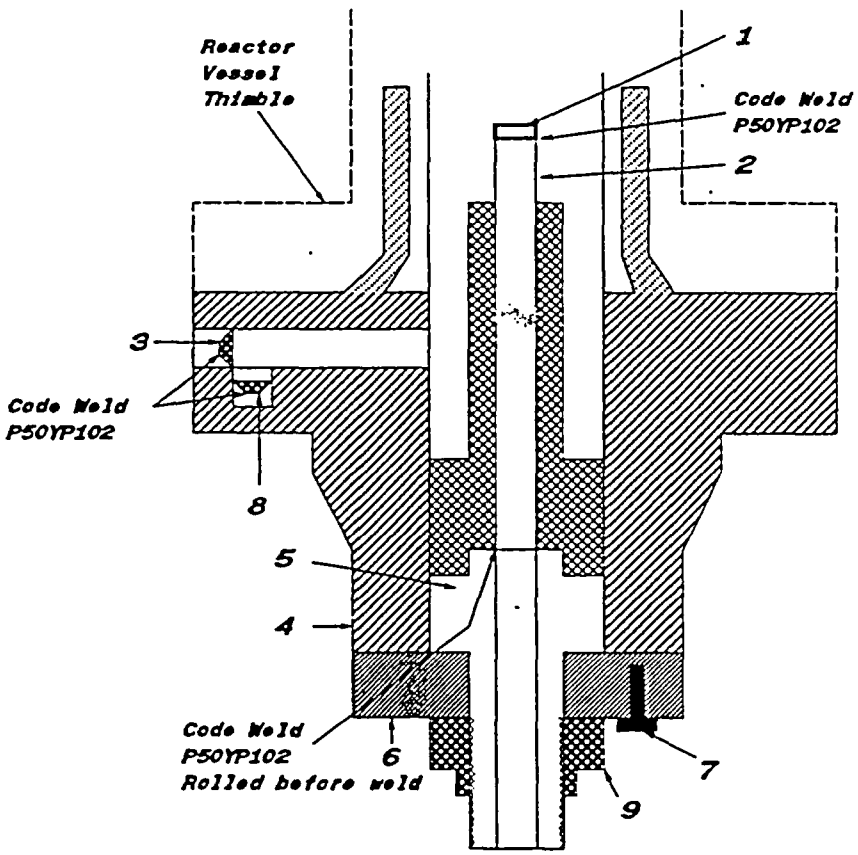

WOT No 01062290 47

ENERGY NORTHWEST
People·Vision·Solutions

FORM NIS-2 OWNER'S REPORT FOR REPAIRS OR REPLACEMENTS
As Required By The Provisions Of The ASME Code Section XI

Date: 03/02/05
Sheet: 1 Of 1
Unit: Not Applicable

1. **Owner:** Energy Northwest
   Address: Columbia Generating Station, North Power Plant Loop, Richland, Washington, 99352
2. **Plant:** Columbia Generating Station
   Address: Columbia Generating Station, North Power Plant Loop, Richland, Washington, 99352
3. **(a) Work Performed By:** Energy Northwest
   (b) Repair Organization P.O. No, Job No, etc.: Energy Northwest
   (c) Type Code Symbol Stamp: Not Applicable
   (d) Certificate Of Authorization No.: Not Applicable
   (e) Expiration Date: Not Applicable
4. **Identification Of System:** Control Rod Drive (CRD)
5. **(a) Applicable Construction Code:** ASME Section III, Code Class 1 - See Notes For Code Edition, Addenda And Code Cases
   (b) Applicable Edition Of ASME Section XI Utilized For Repairs Or Replacements: 1989 Edition with no Addenda, Code Case: None
6. **Identification Of Components Repaired Or Replaced And Replacement Components**

Name Of Component	Name Of Manufacturer	Manufacturer's Serial No	National Board No	Other I.D.	Year Built	Repaired, Replaced Or Replacement	ASME Code Stamped (Yes Or No) Code Class
CRD	General Electric	6792	N/A	N/A	1975	----------	Yes, Code Class 1

7. **Description Of Work Performed:** Overhauled Control Rod Drive (CRD) assembly Serial No 6792. The overhaul work was performed in accordance with plant procedure PPM No 10.5.4 "Control Rod Drive Overhaul" as follows:
   1) Disassembled Control Rod Drive (CRD) assembly for overhaul.
   2) Performed liquid penetrant (PT) examination on the existing Cylinder Tube And Flange (CT&F) assembly Serial No 6792. Liquid penetrant (PT) examination results acceptable.
   3) Performed VT-3 visual examination on the existing ring flange cap screws. VT-3 visual examination results acceptable.
   4) Performed VT-3 visual examination on the existing piston tube nut Serial No 3118. VT-3 visual examination results acceptable.
   5) Reinstalled existing Piston Tube (PT) assembly Serial No 6044.
   6) Reinstalled existing ring flange Serial No 2647.
   7) Reinstalled VT-3 visually examined existing piston tube nut Serial No 3118.
   8) Reinstalled VT-3 visually examined existing ring flange cap screws.

NOTES -

1) ASME Section III Code Cases are as listed on the N-2 Code Data Report for the Control Rod Drive (CRD) assembly Serial No 6792.
2) ASME pressure boundary (retaining) parts and materials such as Cylinder Tube And Flange (CT&F) assembly, Piston Tube (PT) assembly, ring flange, ring flange cap screws and piston tube nut were not replaced during CRD overhaul activities.
3) The Control Rod Drive (CRD) assembly Serial No 6792 is certified to comply with ASME Section III, Code Class 1, 1971 Edition no Addenda.
4) The entire Control Rod Drive (CRD) assembly is identified by the Cylinder Tube And Flange (CT&F) Serial No 6792.

WOT No 01062290 47

ENERGY NORTHWEST
People·Vision·Solutions

FORM NIS-2 OWNER'S REPORT FOR REPAIRS OR REPLACEMENTS (Back)

8 Tests Conducted: Hydrostatic [ ] Pneumatic [ ] Nominal Operating Pressure [ ] None [X]
Test Pressure: Psig
Component Design Pressure: Psig
Test Temperature: °F
Temperature: °F

9. Remarks (Applicable Manufacturer's Data Reports to be attached): None

CERTIFICATE OF COMPLIANCE

We certify that the statements made in this Owner's Report are correct and this replacement conforms to the rules of the ASME Code, Section XI.
Type Code Symbol Stamp: Not Applicable
Certificate Of Authorization No.: Not Applicable
Expiration Date: Not Applicable

Prepared By Kuldip Singh - Program Lead Engineer (PLE) Signed By Kuldip Singh - Program Lead Engineer (PLE)

Date 3/2/05 Date 3/2/05

CERTIFICATE OF INSERVICE INSPECTION

I, the undersigned, holding a valid commission issued by the National Board of Boiler and Pressure Vessel Inspectors and the State of Washington and employed by Hartford Steam Boiler Of Connecticut of Hartford, Connecticut have inspected the components described in this Owner's Report during the period 7/22/2004 to 3/15/2004 and state to the best of my knowledge and belief, the Owner has performed examinations and taken corrective measures described in this Owner's Report in accordance with the requirements of the ASME Code, Section XI.
By signing this certificate neither the Inspector nor his employer makes any warranty, expressed or implied, concerning the examinations and corrective measures described in this Owner's Report. Furthermore, neither the Inspector nor his employer shall be liable in any manner for any personal injury or property damage or a loss of any kind arising from or connected with this inspection.

Inspector's Signature Commissions 10655W AB,N,I
National Board, State, and Endorsements

Date 3/15/2005

WOT No 01062290 48

ENERGY NORTHWEST
People·Vision·Solutions

FORM NIS-2 OWNER'S REPORT FOR REPAIRS OR REPLACEMENTS
As Required By The Provisions Of The ASME Code Section XI

1. Owner: Energy Northwest
Address: Columbia Generating Station, North Power Plant Loop, Richland, Washington, 99352
2. Plant: Columbia Generating Station
Address: Columbia Generating Station, North Power Plant Loop, Richland, Washington, 99352

Date: 03/18/05
Sheet: 1 Of 1
Unit: Not Applicable

3. (a) Work Performed By: Energy Northwest
(b) Repair Organization P.O. No, Job No, etc.: Energy Northwest
(c) Type Code Symbol Stamp: Not Applicable
(d) Certificate Of Authorization No.: Not Applicable
(e) Expiration Date: Not Applicable
4. Identification Of System: Control Rod Drive (CRD)
5. (a) Applicable Construction Code: ASME Section III, Code Class 1 - See Notes For Code Edition, Addenda And Code Cases
(b) Applicable Edition Of ASME Section XI Utilized For Repairs Or Replacements: 1989 Edition with no Addenda, Code Case: None
6. Identification Of Components Repaired Or Replaced And Replacement Components

Name Of Component	Name Of Manufacturer	Manufacturer's Serial No	National Board No	Other I.D.	Year Built	Repaired, Replaced Or Replacement	ASME Code Stamped (Yes Or No) Code Class
CRD	General Electric	7048	N/A	N/A	1974	----------	Yes, Code Class 1

7. Description Of Work Performed: Overhauled Control Rod Drive (CRD) assembly Serial No 7048. The overhaul work was performed in accordance with plant procedure PPM No 10.5.4 "Control Rod Drive Overhaul" as follows:

1) Disassembled Control Rod Drive (CRD) assembly for overhaul.
2) Performed liquid penetrant (PT) examination on the existing Cylinder Tube And Flange (CT&F) assembly Serial No 7048. Liquid penetrant (PT) examination results acceptable.
3) Performed VT-3 visual examination on the existing ring flange cap screws. VT-3 visual examination results acceptable.
4) Performed VT-3 visual examination on the existing piston tube nut Serial No 2460. VT-3 visual examination results acceptable.
5) Reinstalled existing Piston Tube (PT) assembly Serial No 5377.
6) Reinstalled existing ring flange Serial No 1879.
7) Reinstalled VT-3 visually examined existing piston tube nut Serial No 2460.
8) Reinstalled VT-3 visually examined existing ring flange cap screws.

NOTES -

1) ASME Section III Code Cases are as listed on the N-2 Code Data Report for the Control Rod Drive (CRD) assembly Serial No 7048.
2) ASME pressure boundary (retaining) parts and materials such as Cylinder Tube And Flange (CT&F) assembly, Piston Tube (PT) assembly, ring flange, ring flange cap screws and piston tube nut were not replaced during CRD overhaul activities.
3) The Control Rod Drive (CRD) assembly Serial No 7048 is certified to comply with ASME Section III, Code Class 1, 1974 Edition no Addenda.
4) The entire Control Rod Drive (CRD) assembly is identified by the Cylinder Tube And Flange (CT&F) Serial No 7048.

WOT No 01062290 48

ENERGY NORTHWEST
People·Vision·Solutions

FORM NIS-2 OWNER'S REPORT FOR REPAIRS OR REPLACEMENTS (Back)

8 Tests Conducted: Hydrostatic [ ] Pneumatic [ ] Nominal Operating Pressure [ ] None [X]
Test Pressure: Psig Test Temperature: °F
Component Design Pressure: Psig Temperature: °F

9. Remarks (Applicable Manufacturer's Data Reports to be attached): None

CERTIFICATE OF COMPLIANCE

We certify that the statements made in this Owner's Report are correct and this replacement conforms to the rules of the ASME Code, Section XI.
Type Code Symbol Stamp: Not Applicable
Certificate Of Authorization No.: Not Applicable
Expiration Date: Not Applicable

Prepared By Kuldip Singh - Program Lead Engineer (PLE) Signed By Kuldip Singh - Program Lead Engineer (PLE)

Date 3/18/05 Date 3/18/05

CERTIFICATE OF INSERVICE INSPECTION

I, the undersigned, holding a valid commission issued by the National Board of Boiler and Pressure Vessel Inspectors and the State of Washington and employed by Hartford Steam Boiler Of Connecticut of Hartford, Connecticut have inspected the components described in this Owner's Report during the period 7/22/2004 to 3/18/2005 and state to the best of my knowledge and belief, the Owner has performed examinations and taken corrective measures described in this Owner's Report in accordance with the requirements of the ASME Code, Section XI.
By signing this certificate neither the Inspector nor his employer makes any warranty, expressed or implied, concerning the examinations and corrective measures described in this Owner's Report. Furthermore, neither the Inspector nor his employer shall be liable in any manner for any personal injury or property damage or a loss of any kind arising from or connected with this inspection.

Inspector's Signature Commissions 10655W A, B, U, I
National Board, State, and Endorsements

Date 3/18/2005

WOT No 01062290 49

ENERGY NORTHWEST
People·Vision·Solutions

FORM NIS-2 OWNER'S REPORT FOR REPAIRS OR REPLACEMENTS
As Required By The Provisions Of The ASME Code Section XI

1. Owner: Energy Northwest
Address: Columbia Generating Station, North Power Plant Loop, Richland, Washington, 99352
2. Plant: Columbia Generating Station
Address: Columbia Generating Station, North Power Plant Loop, Richland, Washington, 99352

Date: 03/18/05
Sheet: 1 Of 1
Unit: Not Applicable

3. (a) Work Performed By: Energy Northwest
(b) Repair Organization P.O. No, Job No, etc.: Energy Northwest
(c) Type Code Symbol Stamp: Not Applicable
(d) Certificate Of Authorization No.: Not Applicable
(e) Expiration Date: Not Applicable
4. Identification Of System: Control Rod Drive (CRD)
5. (a) Applicable Construction Code: ASME Section III, Code Class 1 - See Notes For Code Edition, Addenda And Code Cases
(b) Applicable Edition Of ASME Section XI Utilized For Repairs Or Replacements: 1989 Edition with no Addenda, Code Case: None
6. Identification Of Components Repaired Or Replaced And Replacement Components

Name Of Component	Name Of Manufacturer	Manufacturer's Serial No	National Board No	Other I.D.	Year Built	Repaired, Replaced Or Replacement	ASME Code Stamped (Yes Or No) Code Class
CRD	General Electric	7078	N/A	N/A	1975	----------	Yes, Code Class 1
CT&F	General Electric	7078	N/A	N/A	1975	Replaced	Yes, Code Class 1
CT&F	General Electric	A9402	N/A	N/A	1995	Replacement	Yes, Code Class 1

7. Description Of Work Performed: Overhauled Control Rod Drive (CRD) assembly Serial No 7078. The overhaul work was performed in accordance with plant procedure PPM No 10.5.4 "Control Rod Drive Overhaul" as follows:

1) Disassembled Control Rod Drive (CRD) assembly for overhaul.
2) Performed liquid penetrant (PT) examination on the existing Cylinder Tube And Flange (CT&F) assembly Serial No 7078. Liquid penetrant (PT) examination results unacceptable.
3) Performed VT-3 visual examination on the existing ring flange cap screws. VT-3 visual examination results acceptable.
4) Performed VT-3 visual examination on the existing piston tube nut Serial No 2311. VT-3 visual examination results acceptable.
5) Installed replacement Cylinder Tube And Flange (CT&F) assembly Serial No A9402.
6) Reinstalled existing Piston Tube (PT) assembly Serial No 3211.
7) Reinstalled existing ring flange Serial No 1917.
8) Reinstalled VT-3 visually examined existing piston tube nut Serial No 2311.
9) Reinstalled VT-3 visually examined existing ring flange cap screws.

NOTES -

1) ASME Section III Code Cases are as listed on the N-2 Code Data Report for the Control Rod Drive (CRD) assembly Serial No A9402.
2) The existing Cylinder Tube And Flange (CT&F) assembly Serial No 7078 is certified to comply with ASME Section III, Code Class 1, 1971 Edition with no Addenda.
3) ASME pressure boundary (retaining) parts and materials such as Piston Tube (PT) assembly, ring flange, ring flange cap screws and piston tube nut were reused during CRD overhaul activities with the exception of Cylinder Tube And Flange (CT&F) assembly which was replaced.
4) The replacement Cylinder Tube And Flange (CT&F) assembly Serial No A9402 is certified to comply with ASME Section III, Code Class 1, 1974 Edition with Winter 1975 Addenda.
5) The entire Control Rod Drive (CRD) assembly is identified by the Cylinder Tube And Flange (CT&F) Serial No A9402.

WOT No 01062290 49

ENERGY NORTHWEST
People·Vision·Solutions

FORM NIS-2 OWNER'S REPORT FOR REPAIRS OR REPLACEMENTS (Back)

8 Tests Conducted: Hydrostatic [ ] Pneumatic [ ] Nominal Operating Pressure [ ] None [X]
Test Pressure: Psig Test Temperature: °F
Component Design Pressure: Psig Temperature: °F

9. Remarks (Applicable Manufacturer's Data Reports to be attached): See attached N-2 Code Data Report for the replacement Cylinder Tube And Flange (CT&F) assembly Serial No A9402.

CERTIFICATE OF COMPLIANCE

We certify that the statements made in this Owner's Report are correct and this replacement conforms to the rules of the ASME Code, Section XI.
Type Code Symbol Stamp: Not Applicable
Certificate Of Authorization No.: Not Applicable
Expiration Date: Not Applicable

Prepared By Kuldip Singh - Program Lead Engineer (PLE) Signed By Kuldip Singh - Program Lead Engineer (PLE)

Date 3/18/05 Date 3/18/05

CERTIFICATE OF INSERVICE INSPECTION

I, the undersigned, holding a valid commission issued by the National Board of Boiler and Pressure Vessel Inspectors and the State of Washington and employed by Hartford Steam Boiler Of Connecticut of Hartford, Connecticut have inspected the components described in this Owner's Report during the period 7/22/2004 to 3/18/2005 and state to the best of my knowledge and belief, the Owner has performed examinations and taken corrective measures described in this Owner's Report in accordance with the requirements of the ASME Code, Section XI.
By signing this certificate neither the Inspector nor his employer makes any warranty, expressed or implied, concerning the examinations and corrective measures described in this Owner's Report. Furthermore, neither the Inspector nor his employer shall be liable in any manner for any personal injury or property damage or a loss of any kind arising from or connected with this inspection.

Inspector's Signature Commissions 10655W A,B,N,I
National Board, State, and Endorsements

Date 3/18/2005

WOT No. 01062290 49

FORM N-2 NPT CERTIFICATE HOLDERS' DATA REPORT FOR NUCLEAR PART AND APPURTENANCES*

As required by the Provision of the ASME Code Rules, Section III, Div. I

1. Manufactured & Certified by : General Electric Company Nuclear Fuel & Components Manufacturing (GE NF & CM)

   2117 Castle Hayne Road, Wilmington, North Carolina 28401

   (Name and Address of NPT Certificate Holder)

   (b) Manufactured for : WNP 2 Richland, Washington 99352

   (Name and Address of N Certificate Holder for completed nuclear component)

2. Identification - Certificate Holder's S/N of Part : A9402 Nat'l Bd. No. N/A

   (a) Constructed According to Drawing No: 919D258G003 Rev 18 Dwg. Prepared by D. L. Peterson

   (b) Description of Part Inspected: Cylinder Tube & Flange

   (c) Applicable ASME Code: Section III , Edition 1974 , Addenda Date W75 , Case No. 1361-2 Class 1

3. REMARKS: Standard part for use with Reactor. Hydrostatically tested at 1825 psi. min.

   (Brief description of service for which component was designed)

Sheet 1 of 2

We certify that the statements in this report are correct and this vessel part or appurtenance as defined in the code conforms to the rules of construction of the ASME Code Section III. (The applicable Designed Specification and Stress Report are not the responsibility of the NPT Certificate Holder for parts. An NPT Certification Holder for appurtenances is responsible for furnishing a separate Design Specification and Stress Report if the appurtenance is not included in the component Design Specification and Stress Report).

Date: 06/27/95 Signed GE - NEBG - NF & CM - QA By

(NPT Certificate Holder) (ASC QA Representive)

Certificate of Authorization Expires: 6/16/96 Certification of Authorization No. : NPT N - 1151

Certification of Design for Appurtenance

Design information on file at GE Company, San Jose, California

Stress analysis report on file at GE Company, San Jose, California

DC22A6253 Rev. 1
Design specification certified by Bjorn Haaberg Prof. Eng. State Calif. Reg. No. 15570

DC22A6254 Rev 1
Stress analysis report certified by Edward Yoshio Prof. Eng. State Calif. Reg. No. M018646

Certification of Shop Inspection

I, the undersigned, holding a valid commission by the National Board of Boiler and Pressure Inspectors and/or the State or Province of North Carolina and employed by Department of Labor of State of North Carolina have inspected the part of a pressure vessel described in this Partial Data Report on 6/16, 1995, and state that to the best of my knowledge and belief, the NPT Certificate Holder has constructed this part in accordance with the ASME Code Section III.

By signing this certificate, neither the Inspector nor his employer makes any warranty, expressed or implied, concerning the part described in the Partial Data Report. Furthermore, neither the Inspector nor his employer shall be liable in any manner for any personal injury or property damages or a loss of any kind arising from or connected with this inspection.

6/27, 1995 — Date

Inspector's Signature

NC 1231, Ohio, WC 3686 PA — National Board, State, Province And No.

*Supplemental sheets in form of lists, sketches or drawing may be used provided (1) size is 8-1/2" x 11", (2) information in 1-2 on this Data Report is included on each sheet, and (3) each sheet is numbered and number of sheets is recorded in Item 3. "REMARKS".

(07/90)

FORM N-2 (back)

Items 4-8 Incl. to be completed for single wall vessels, jackets vessels, or shells of heat exchangers.

4. Shell: Material _____ T.S. _____ Nominal Thickness ___ in. Corrosion Allowance ___ in. Dia. ___ ft. ___ in. Length ___ ft. ___
(Kind & Spec. No.) (Min. of Range Specified)

5. Seams: Long _____ H.T.[1] _____ R.T. _____ Efficiency _____%
Girth _____ H.T.[1] _____ R.T. _____ No. of Courses _____

6. Heads: (a) Material _____ T.S. _____ (b) Material _____ T.S. _____

	Location (Top Bottom, Ends)	Thickness	Crown Radius	Knuckle Radius	Elliptical Ratio	Concial Apex Angle	Hemispherical Radius	Flat Diameter	Side to Press. (conv. or conc.)
(a)									
(b)									

If removable, bolts used _____ (Material, Spec. No., T.S. Size Number) Other fastening _____ (Describe or attach sketch)

7. Jacket Closure: _____
(Describe as ogee and weld, bar, etc. If bar give dimensions, if bolts, describe or sketch)

Drop Weight _____
Charpy Impact _____ ft-lb

8. Design pressure[2] 1250 psi at 575 °F at temp of _____ °F

Items 9 and 10 to be completed for tube sections

9. Tube Sheets: Stationary. Material _____ (Kind & Spec. No.) Dia. _____ (Subject to pressure) Thickness ___ in. Attachment _____ (Welded, Bolted)
Floating. Material _____ Dia. _____ Thickness ___ in. Attachment _____

10. Tubes: Material _____ O.D. _____ in. Thickness _____ inches or gage. Number _____ Type _____ (Str. or U)

Items 11 - 14 incl. to be completed for inner chambers of jacketed vessels, or channels of heat exchangers.

11. Shell: Material _____ T.S. _____ Nominal Thickness ___ in. Corrosion Allowance ___ in. Dia. ___ ft. ___ in. Length ___ ft. ___
(Kind & Spec. No.) (Min. of Range Specified)

12. Seams: Long _____ H.T.[1] _____ R.T. _____ Efficiency _____%
Girth _____ H.T.[1] _____ R.T. _____ No. of Courses _____

13. Heads: (a) Material _____ T.S. _____ (b) Material _____ T.S. _____

	Location	Thickness	Crown Radius	Knuckle Radius	Elliptical Ratio	Concial Apex Angle	Hemispherical Radius	Flat Diameter	Side to Press. (conv. or conc.)
(a)	Top, bottom, ends								
(b)	Channel								

If removable, bolts used (a)_____ (b)_____ (c)_____ Other fastening _____ (Describe or attach sketch)

Drop Weight _____
Charpy Impact _____ ft-lb

14. Design pressure[2] _____ psi at _____ °F at temp of _____ °F

Items below to be completed for all vessels where applicable.

15. Safety Valve Outlets: Number _____ Size _____ Location _____

16. Nozzles:

Purpose (Inlet, Outlet, Drain)	Number	Dia. or Size	Type	Material	Thickness	Reinforcement Material	How Attached

17. Inspection Openings: Manholes, No. _____ Size _____ Location _____
Handholes, No. _____ Size _____ Location _____
Threaded, No. _____ Size _____ Location _____

18. Supports: Skirt _____ (Yes or No) Lugs _____ (Number) Legs _____ (Number) Other _____ (Describe) Attached _____ (Where & How)

1 - If Postweld Heat-Treated.
2 - List other internal or external pressure with coincident temperature when applicable.

WOT No. 01062290 49

FORM N-2 NPT CERTIFICATE HOLDERS' DATA REPORT FOR NUCLEAR PART AND APPURTENANCES*

As required by the Provision of the ASME Code Rules, Section III, Div. I

1. Manufactured & Certified by : General Electric Company Nuclear Fuel & Components Manufacturing (GE NF & CM)

   2117 Castle Hayne Road, Wilmington, North Carolina 28401

   (Name and Address of NPT Certificate Holder)

   (b) Manufactured for : WNP 2 Richland, Washington 99352

   (Name and Address of N Certificate Holder for completed nuclear component)

2. Identification - Certificate Holder's S/N of Part : A9402 Nat'l Bd. No. N/A

   (a) Constructed According to Drawing No: 919D258G003 Rev 18 Dwg. Prepared by D. L. Peterson

   (b) Description of Part Inspected: Cylinder Tube & Flange

   (c) Applicable ASME Code: Section III . Edition 1974 . Addenda Date W'75 . Case No. 1361-2 Class 1

3. REMARKS: Standard part for use with Reactor. Hydrostatically tested at 1825 psi. min.

   (Brief description of service for which component was designed)

1. Cap 166B9274P001
   SA182 - F316
   3/8" thick x 1 1/16" OD

2. Indicator Tube 167B4908P001
   SA312 - TP316
   3/4" sch 40 - seamless pipe
   0.113" wall thickness
   1.065" max. dia.

3. Plug 159A1176P001
   SA182 - F304
   1/4" thick x 0.812" OD

4. Flange 919D610P001 (719E474)
   SA182 - F304
   3.37" thick x 9 5/8" OD

5. Head 129B3539P005
   SA182 - F304
   7/8" thick x 2.875" dia.

6. Ring Flange 114B5122P002
   SA182 - F304
   1" thick x 5.0" OD x 1.75" ID

7. Cap Screw 117C4516P002
   SA193 - B6
   6 ea. 1/2" dia. on 4 1/8" bolt circle

8. Plug 175A7961P001
   SA182 - F304
   0.38" thick x 1.307" dia.

9. Nut 114B5460P001
   XM - 19 SA479
   1.30" thick x 2.62" dia.

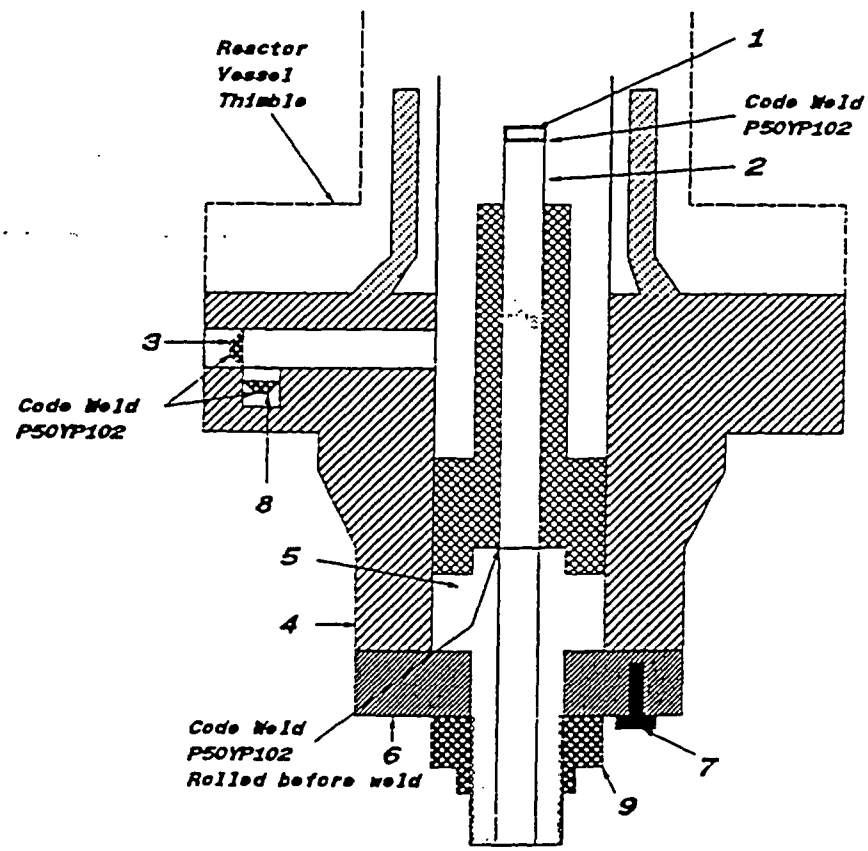

WOT No 01062290 50

ENERGY NORTHWEST
People·Vision·Solutions

FORM NIS-2 OWNER'S REPORT FOR REPAIRS OR REPLACEMENTS
As Required By The Provisions Of The ASME Code Section XI

Date: 01/06/05
Sheet: 1 Of 1
Unit: Not Applicable

1. **Owner:** Energy Northwest
   Address: Columbia Generating Station, North Power Plant Loop, Richland, Washington, 99352
2. **Plant:** Columbia Generating Station
   Address: Columbia Generating Station, North Power Plant Loop, Richland, Washington, 99352
3. (a) **Work Performed By:** Energy Northwest
   (b) **Repair Organization P.O. No, Job No, etc.:** Energy Northwest
   (c) **Type Code Symbol Stamp:** Not Applicable
   (d) **Certificate Of Authorization No.:** Not Applicable
   (e) **Expiration Date:** Not Applicable
4. **Identification Of System:** Control Rod Drive (CRD)
5. (a) **Applicable Construction Code:** ASME Section III, Code Class 1 - See Notes For Code Edition, Addenda And Code Cases
   (b) **Applicable Edition Of ASME Section XI Utilized For Repairs Or Replacements:** 1989 Edition with no Addenda, Code Case: None
6. **Identification Of Components Repaired Or Replaced And Replacement Components**

Name Of Component	Name Of Manufacturer	Manufacturer's Serial No	National Board No	Other I.D.	Year Built	Repaired, Replaced Or Replacement	ASME Code Stamped (Yes Or No) Code Class
CRD	General Electric	7377	N/A	N/A	1975	----------	Yes, Code Class 1
CT&F	General Electric	7377	N/A	N/A	1975	Replaced	Yes, Code Class 1
CT&F	General Electric	A9401	N/A	N/A	1995	Replacement	Yes, Code Class 1

7. **Description Of Work Performed:** Overhauled Control Rod Drive (CRD) assembly Serial No 7377. The overhaul work was performed in accordance with plant procedure PPM No 10.5.4 "Control Rod Drive Overhaul" as follows:
   1) Disassembled Control Rod Drive (CRD) assembly for overhaul.
   2) Performed liquid penetrant (PT) examination on the existing Cylinder Tube And Flange (CT&F) assembly Serial No 7377. Liquid penetrant (PT) examination results unacceptable.
   3) Performed VT-3 visual examination on the existing ring flange cap screws. VT-3 visual examination results acceptable.
   4) Performed VT-3 visual examination on the existing piston tube nut Serial No 3083. VT-3 visual examination results acceptable.
   5) Installed replacement Cylinder Tube And Flange (CT&F) assembly Serial No A9401.
   6) Reinstalled existing Piston Tube (PT) assembly Serial No 6025.
   7) Reinstalled existing ring flange Serial No 2597.
   8) Reinstalled VT-3 visually examined existing piston tube nut Serial No 3083.
   9) Reinstalled VT-3 visually examined existing ring flange cap screws.

NOTES -

1) ASME Section III Code Cases are as listed on the N-2 Code Data Report for the Control Rod Drive (CRD) assembly Serial No A9401.
2) The existing Cylinder Tube And Flange (CT&F) assembly Serial No 7377 is certified to comply with ASME Section III, Code Class 1, 1971 Edition with no Addenda.
3) ASME pressure boundary (retaining) parts and materials such as Piston Tube (PT) assembly, ring flange, ring flange cap screws and piston tube nut were reused during CRD overhaul activities with the exception of Cylinder Tube And Flange (CT&F) assembly which was replaced.
4) The replacement Cylinder Tube And Flange (CT&F) assembly Serial No A9401 is certified to comply with ASME Section III, Code Class 1, 1974 Edition with Winter 1975 Addenda.
5) The entire Control Rod Drive (CRD) assembly is identified by the Cylinder Tube And Flange (CT&F) Serial No A9401.

WOT No 01062290 50

ENERGY NORTHWEST
People · Vision · Solutions

FORM NIS-2 OWNER'S REPORT FOR REPAIRS OR REPLACEMENTS (Back)

8 Tests Conducted: Hydrostatic [ ] *Pneumatic* [ ] *Nominal Operating Pressure* [ ] *None* [X]

Test Pressure: Psig *Test Temperature:* °F

Component Design Pressure: Psig *Temperature:* °F

9. Remarks (Applicable Manufacturer's Data Reports to be attached): See attached N-2 Code Data Report for the replacement Cylinder Tube And Flange (CT&F) assembly Serial No A9401.

CERTIFICATE OF COMPLIANCE

We certify that the statements made in this Owner's Report are correct and this replacement *conforms to the rules of the ASME Code, Section XI.*

Type Code Symbol Stamp: Not Applicable

Certificate Of Authorization No.: Not Applicable

Expiration Date: Not Applicable

Prepared By Kuldip Singh - Program Lead Engineer (PLE) *Signed By* Kuldip Singh - Program Lead Engineer (PLE)

Date 1/18/05 *Date* 1/18/05

CERTIFICATE OF INSERVICE INSPECTION

I, the undersigned, holding a valid commission issued by the National Board of Boiler and Pressure Vessel Inspectors and the State of Washington *and employed by* Hartford Steam Boiler Of Connecticut of Hartford, Connecticut *have inspected the components described in this Owner's Report during the period* 7/26/2004 *to* 3/17/2005 *and state to the best of my knowledge and belief, the Owner has performed examinations and taken corrective measures described in this Owner's Report in accordance with the requirements of the ASME Code, Section XI.*

By signing this certificate neither the Inspector nor his employer makes any warranty, expressed or implied, concerning the examinations and corrective measures described in this Owner's Report. Furthermore, neither the Inspector nor his employer shall be liable in any manner for any personal injury or property damage or a loss of any kind arising from or connected with this inspection.

Inspector's Signature *Commissions* 10655(W) A,B,N,I
National Board, State, and Endorsements

Date 3/17/2005

WOT NO 01062290 50

FORM N-2 NPT CERTIFICATE HOLDERS' DATA REPORT FOR NUCLEAR PART AND APPURTENANCES*

As required by the Provision of the ASME Code Rules, Section III, Div. I

1. Manufactured & Certified by : General Electric Company Nuclear Fuel & Components Manufacturing (GE NF & CM)

   2117 Castle Hayne Road, Wilmington, North Carolina 28401

   (Name and Address of NPT Certificate Holder)

   (b) Manufactured for : WNP 2 Richland, Washington 99352

   (Name and Address of N Certificate Holder for completed nuclear component)

2. Identification - Certificate Holder's S/N of Part : A9401 Nat'l Bd. No. N/A

   (a) Constructed According to Drawing No: 919D258G003 Rev 18 Dwg. Prepared by D. L. Peterson

   (b) Description of Part Inspected: Cylinder Tube & Flange

   (c) Applicable ASME Code: Section III , Edition 1974 , Addenda Date W75 , Case No. 1361-2 Class 1

3. REMARKS: Standard part for use with Reactor. Hydrostatically tested at 1825 psi. min.

   (Brief description of service for which component was designed)

Sheet 1 of 2

We certify that the statements in this report are correct and this vessel part or appurtenance as defined in the code conforms to the rules of construction of the ASME Code Section III. (The applicable Designed Specification and Stress Report are not the responsibility of the NPT Certificate Holder for parts. An NPT Certification Holder for appurtenances is responsible for furnishing a separate Design Specification and Stress Report if the appurtenance is not included in the component Design Specification and Stress Report).

Date: 06/27/95 Signed GE - NEBG - NF & CM - QA By

(NPT Certificate Holder) (GE QA Representive)

Certificate of Authorization Expires: 6/16/96 Certification of Authorization No. : NPT N - 1151

Certification of Design for Appurtenance

Design information on file at GE Company, San Jose, California

Stress analysis report on file at GE Company, San Jose, California

DC22A6253 Rev. 1
Design specification certified by Bjorn Haaberg Prof. Eng. State Calif. Reg. No. 15570

DC22A6254 Rev 1
Stress analysis report certified by Edward Yoshio Prof. Eng. State Calif. Reg. No. M018646

Certification of Shop Inspection

I, the undersigned, holding a valid commission by the National Board of Boiler and Pressure Inspectors and/or the State or Province of North Carolina and employed by Department of Labor of State of North Carolina have inspected the part of a pressure vessel described in this Partial Data Report on 6/16, 1995, and state that to the best of my knowledge and belief, the NPT Certificate Holder has constructed this part in accordance with the ASME Code Section III.

By signing this certificate, neither the Inspector nor his employer makes any warranty, expressed or implied, concerning the part described in the Partial Data Report. Furthermore, neither the Inspector nor his employer shall be liable in any manner for any personal injury or property damages or a loss of any kind arising from or connected with this inspection.

6/27, 1995		NC 1231, Ohio, WC 3686 PA
Date	Inspector's Signature	National Board, State, Province And No.

*Supplemental sheets in form of lists, sketches or drawing may be used provided (1) size is 8-1/2" x 11", (2) information in 1-2 on this Data Report is included on each sheet, and (3) each sheet is numbered and number of sheets is recorded in Item 3. "REMARKS".

(07/90)

FORM N-2 (back)

Items 4-8 Incl. to be completed for single wall vessels, jackets vessels, or shells of heat exchangers.

4. Shell: Material _____ T.S. _____ Nominal Thickness ___ in. Corrosion Allowance ___ in. Dia. ___ ft. ___ in. Length ___ ft. ___
(Kind & Spec. No.) (Min. of Range Specified)

5. Seams: Long _____ H.T.[1] _____ R.T. _____ Efficiency _____%
Girth _____ H.T.[1] _____ R.T. _____ No. of Courses _____

6. Heads: (a) Material _____ T.S. _____ (b) Material _____ T.S. _____

	Location (Top Bottom, Ends)	Thickness	Crown Radius	Knuckle Radius	Elliptical Ratio	Concial Apex Angle	Hemispherical Radius	Flat Diameter	Side to Press. (conv. or conc.)
(a)									
(b)									

If removable, bolts used _____ (Material, Spec. No., T.S. Size Number) Other fastening _____ (Describe or attach sketch)

7. Jacket Closure: _____
(Describe as ogee and weld, bar, etc. If bar give dimensions, if bolts, describe or sketch)

Drop Weight _____
Charpy Impact _____ ft-lb

8. Design pressure[2] 1250 psi at 575 °F at temp of _____ °F

Items 9 and 10 to be completed for tube sections

9. Tube Sheets: Stationary. Material _____ (Kind & Spec. No.) Dia. _____ (Subject to pressure) Thickness ___ in. Attachment _____ (Welded, Bolted)
Floating. Material _____ Dia. _____ Thickness ___ in. Attachment _____

10. Tubes: Material _____ O.D. _____ in. Thickness _____ Inches or gage. Number _____ Type _____ (Str. or U)

Items 11 - 14 incl. to be completed for inner chambers of jacketed vessels, or channels of heat exchangers.

11. Shell: Material _____ T.S. _____ Nominal Thickness ___ in. Corrosion Allowance ___ in. Dia. ___ ft. ___ in. Length ___ ft. ___
(Kind & Spec. No.) (Min. of Range Specified)

12. Seams: Long _____ H.T.[1] _____ R.T. _____ Efficiency _____%
Girth _____ H.T.[1] _____ R.T. _____ No. of Courses _____

13. Heads: (a) Material _____ T.S. _____ (b) Material _____ T.S. _____

	Location	Thickness	Crown Radius	Knuckle Radius	Elliptical Ratio	Concial Apex Angle	Hemispherical Radius	Flat Diameter	Side to Press. (conv. or conc.)
(a)	Top, bottom, ends								
(b)	Channel								

If removable, bolts used (a)_____ (b)_____ (c)_____ Other fastening _____ (Describe or attach sketch)

Drop Weight _____
Charpy Impact _____ ft-lb

14. Design pressure[2] _____ psi at _____ °F at temp of _____ °F

Items below to be completed for all vessels where applicable.

15. Safety Valve Outlets: Number _____ Size _____ Location _____

16. Nozzles:

Purpose (Inlet, Outlet, Drain)	Number	Dia. or Size	Type	Material	Thickness	Reinforcement Material	How Attached

17. Inspection Openings: Manholes, No. _____ Size _____ Location _____
Handholes, No. _____ Size _____ Location _____
Threaded, No. _____ Size _____ Location _____

18. Supports: Skirt _____ (Yes or No) Lugs _____ (Number) Legs _____ (Number) Other _____ (Describe) Attached _____ (Where & How)

1 - If Postweld Heat-Treated.
2 - List other internal or external pressure with coincident temperature when applicable.

WOT No. 01062290 50

FORM N-2 NPT CERTIFICATE HOLDERS' DATA REPORT FOR NUCLEAR PART AND APPURTENANCES*
As required by the Provision of the ASME Code Rules, Section III, Div. I

Manufactured & Certified by : General Electric Company Nuclear Fuel & Components Manufacturing (GE NF & CM)
2117 Castle Hayne Road, Wilmington, North Carolina 28401
(Name and Address of NPT Certificate Holder)

(b) Manufactured for : WNP 2 Richland, Washington 99352
(Name and Address of N Certificate Holder for completed nuclear component)

2. Identification - Certificate Holder's S/N of Part : A9401 Nat'l Bd. No. N/A

(a) Constructed According to Drawing No: 919D258G003 Rev 18 Dwg. Prepared by D. L. Peterson

(b) Description of Part Inspected: Cylinder Tube & Flange

(c) Applicable ASME Code: Section III , Edition 1974 , Addenda Date W'75 , Case No. 1361-2 Class 1

3. REMARKS: Standard part for use with Reactor. Hydrostatically tested at 1825 psi. min.
(Brief description of service for which component was designed)

1. Cap 166B9274P001
SA182 - F316
3/8" thick x 1 1/16" OD

2. Indicator Tube 167B4908P001
SA312 - TP316
3/4" sch 40 - seamless pipe
0.113" wall thickness
1.065" max. dia.

3. Plug 159A1176P001
SA182 - F304
1/4" thick x 0.812" OD

4. Flange 919D610P001 (719E474)
SA182 - F304
3.37" thick x 9 5/8" OD

5. Head 129B3539P005
SA182 - F304
7/8" thick x 2.875" dia.

6. Ring Flange 114B5122P002
SA182 - F304
1" thick x 5.0" OD x 1.75" ID

7. Cap Screw 117C4516P002
SA193 - B6
6 ea. 1/2" dia. on 4 1/8" bolt circle

8. Plug 175A7961P001
SA182 - F304
0.38" thick x 1.307" dia.

9. Nut 114B5460P001
XM - 19 SA479
1.30" thick x 2.62" dia.

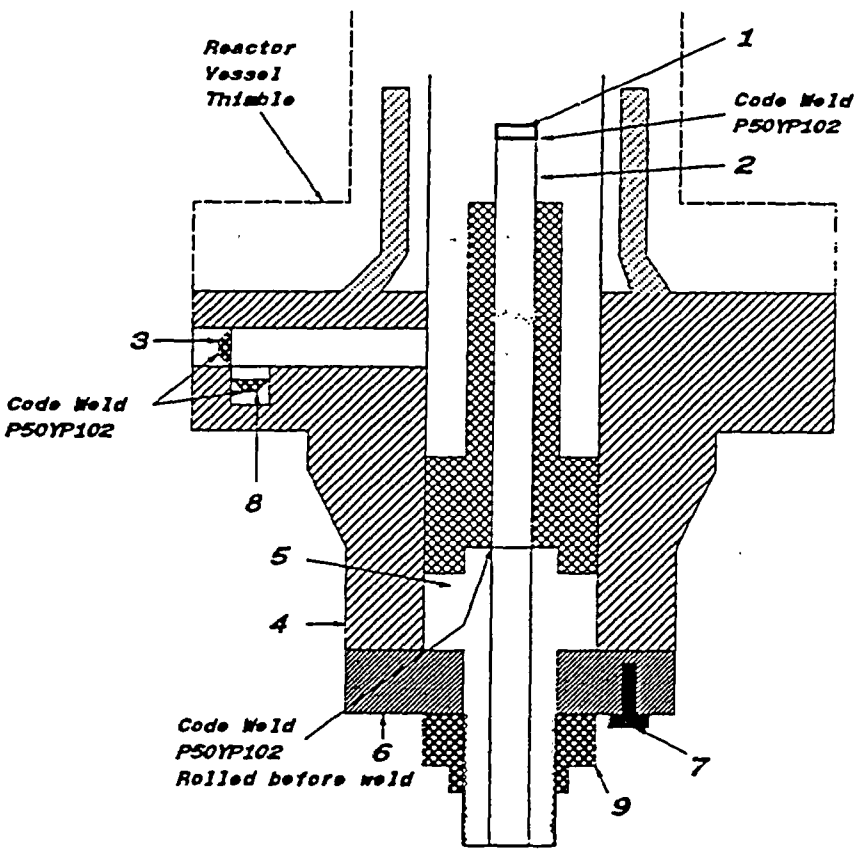

WOT No 01062290 51

ENERGY NORTHWEST
People·Vision·Solutions

FORM NIS-2 OWNER'S REPORT FOR REPAIRS OR REPLACEMENTS
As Required By The Provisions Of The ASME Code Section XI

1. Owner: Energy Northwest
Address: Columbia Generating Station, North Power Plant Loop, Richland, Washington, 99352
2. Plant: Columbia Generating Station
Address: Columbia Generating Station, North Power Plant Loop, Richland, Washington, 99352

Date: 01/06/05
Sheet: 1 Of 1
Unit: Not Applicable

3. (a) Work Performed By: Energy Northwest
(b) Repair Organization P.O. No, Job No, etc.: Energy Northwest
(c) Type Code Symbol Stamp: Not Applicable
(d) Certificate Of Authorization No.: Not Applicable
(e) Expiration Date: Not Applicable
4. Identification Of System: Control Rod Drive (CRD)
5. (a) Applicable Construction Code: ASME Section III, Code Class 1 - See Notes For Code Edition, Addenda And Code Cases
(b) Applicable Edition Of ASME Section XI Utilized For Repairs Or Replacements: 1989 Edition with no Addenda, Code Case: None
6. Identification Of Components Repaired Or Replaced And Replacement Components

Name Of Component	Name Of Manufacturer	Manufacturer's Serial No	National Board No	Other I.D.	Year Built	Repaired, Replaced Or Replacement	ASME Code Stamped (Yes Or No) Code Class
CRD	General Electric	6218	N/A	N/A	1974	----------	Yes, Code Class 1
CT&F	General Electric	6218	N/A	N/A	1974	Replaced	Yes, Code Class 1
CT&F	General Electric	A9451	N/A	N/A	1995	Replacement	Yes, Code Class 1

7. Description Of Work Performed: Overhauled Control Rod Drive (CRD) assembly Serial No 6218. The overhaul work was performed in accordance with plant procedure PPM No 10.5.4 "Control Rod Drive Overhaul" as follows:

1) Disassembled Control Rod Drive (CRD) assembly for overhaul.
2) Performed liquid penetrant (PT) examination on the existing Cylinder Tube And Flange (CT&F) assembly Serial No 6218. Liquid penetrant (PT) examination results unacceptable.
3) Performed VT-3 visual examination on the existing ring flange cap screws. VT-3 visual examination results acceptable.
4) Performed VT-3 visual examination on the existing piston tube nut Serial No 2866. VT-3 visual examination results acceptable.
5) Installed replacement Cylinder Tube And Flange (CT&F) assembly Serial No A9451.
6) Reinstalled existing Piston Tube (PT) assembly Serial No 5503.
7) Reinstalled existing ring flange Serial No 2137.
8) Reinstalled VT-3 visually examined existing piston tube nut Serial No 2866.
9) Reinstalled VT-3 visually examined existing ring flange cap screws.

NOTES -

1) ASME Section III Code Cases are as listed on the N-2 Code Data Report for the Control Rod Drive (CRD) assembly Serial No A9451.
2) The existing Cylinder Tube And Flange (CT&F) assembly Serial No 6218 is certified to comply with ASME Section III, Code Class 1, 1971 Edition with no Addenda.
3) ASME pressure boundary (retaining) parts and materials such as Piston Tube (PT) assembly, ring flange, ring flange cap screws and piston tube nut were reused during CRD overhaul activities with the exception of Cylinder Tube And Flange (CT&F) assembly which was replaced.
4) The replacement Cylinder Tube And Flange (CT&F) assembly Serial No A9451 is certified to comply with ASME Section III, Code Class 1, 1974 Edition with Winter 1975 Addenda.
5) The entire Control Rod Drive (CRD) assembly is identified by the Cylinder Tube And Flange (CT&F) Serial No A9451.

WOT No 01062290 51

ENERGY NORTHWEST
People·Vision·Solutions

FORM NIS-2 OWNER'S REPORT FOR REPAIRS OR REPLACEMENTS (Back)

8 Tests Conducted: Hydrostatic [ ] Pneumatic [ ] Nominal Operating Pressure [ ] None [X]
Test Pressure: Psig Test Temperature: °F
Component Design Pressure: Psig Temperature: °F

9. Remarks (Applicable Manufacturer's Data Reports to be attached): See attached N-2 Code Data Report for the replacement Cylinder Tube And Flange (CT&F) assembly Serial No A9451.

CERTIFICATE OF COMPLIANCE

We certify that the statements made in this Owner's Report are correct and this replacement conforms to the rules of the ASME Code, Section XI.
Type Code Symbol Stamp: Not Applicable
Certificate Of Authorization No.: Not Applicable
Expiration Date: Not Applicable

Prepared By Kuldip Singh - Program Lead Engineer (PLE) Signed By Kuldip Singh - Program Lead Engineer (PLE)
Date 1/18/05 Date 1/18/05

CERTIFICATE OF INSERVICE INSPECTION

I, the undersigned, holding a valid commission issued by the National Board of Boiler and Pressure Vessel Inspectors and the State of Washington and employed by Hartford Steam Boiler Of Connecticut of Hartford, Connecticut have inspected the components described in this Owner's Report during the period 7/26/2004 to 3/17/2005 and state to the best of my knowledge and belief, the Owner has performed examinations and taken corrective measures described in this Owner's Report in accordance with the requirements of the ASME Code, Section XI.
By signing this certificate neither the Inspector nor his employer makes any warranty, expressed or implied, concerning the examinations and corrective measures described in this Owner's Report. Furthermore, neither the Inspector nor his employer shall be liable in any manner for any personal injury or property damage or a loss of any kind arising from or connected with this inspection.

Inspector's Signature Commissions 1065SW A,B,N,I
National Board, State, and Endorsements

Date 3/17/2005

WOT No. 01662290 51

FORM N-2 NPT CERTIFICATE HOLDERS' DATA REPORT FOR NUCLEAR PART AND APPURTENANCES*

As required by the Provision of the ASME Code Rules, Section III, Div. I

11/8/05

1. Manufactured & Certified by : General Electric Company Nuclear Fuel & Components Manufacturing (GE NF & CM)

   2117 Castle Hayne Road, Wilmington, North Carolina 28401

   (Name and Address of NPT Certificate Holder)

   (b) Manufactured for : WNP 2 Richland, Washington 99352

   (Name and Address of N Certificate Holder for completed nuclear component)

2. Identification - Certificate Holder's S/N of Part : A9451 Nat'l Bd. No. N/A

   (a) Constructed According to Drawing No: 919D258G003 Rev 18 Dwg. Prepared by D. L. Peterson

   (b) Description of Part Inspected: Cylinder Tube & Flange

   (c) Applicable ASME Code: Section III , Edition 1974 , Addenda Date W'75 , Case No. 1361-2 Class 1

3. REMARKS: Standard part for use with Reactor. Hydrostatically tested at 1825 psi. min.

   (Brief description of service for which component was designed)

Sheet 1 of 2

We certify that the statements in this report are correct and this vessel part or appurtenance as defined in the code conforms to the rules of construction of the ASME Code Section III. (The applicable Designed Specification and Stress Report are not the responsibility of the NPT Certificate Holder for parts. An NPT Certification Holder for appurtenances is responsible for furnishing a separate Design Specification and Stress Report if the appurtenance is not included in the component Design Specification and Stress Report).

Date: 06/27/95 Signed GE - NEBG - NF & CM - QA By

(NPT Certificate Holder) (SC QA Representive)

Certificate of Authorization Expires: 6/16/96 Certification of Authorization No. : NPT N - 1151

Certification of Design for Appurtenance

Design information on file at GE Company, San Jose, California

Stress analysis report on file at GE Company, San Jose, California

DC22A6253 Rev. 1
Design specification certified by Bjorn Haaberg Prof. Eng. State Calif. Reg. No. 15570

DC22A6254 Rev 1
Stress analysis report certified by Edward Yoshio Prof. Eng. State Calif. Reg. No. M018646

Certification of Shop Inspection

I, the undersigned, holding a valid commission by the National Board of Boiler and Pressure Inspectors and/or the State or Province of North Carolina and employed by Department of Labor of State of North Carolina have inspected the part of a pressure vessel described in this Partial Data Report on 5/16, 1995, and state that to the best of my knowledge and belief, the NPT Certificate Holder has constructed this part in accordance with the ASME Code Section III.

By signing this certificate, neither the Inspector nor his employer makes any warranty, expressed or implied, concerning the part described in the Partial Data Report. Furthermore, neither the Inspector nor his employer shall be liable in any manner for any personal injury or property damages or a loss of any kind arising from or connected with this inspection.

6/27, 1995 — Date

Inspector's Signature

NC 1231, Ohio, WC 3686 PA — National Board, State, Province And No.

Supplemental sheets in form of lists, sketches or drawing may be used provided (1) size is 8-1/2" x 11", (2) information in 1-2 on this Data Report is included on each sheet, and (3) each sheet is numbered and number of sheets is recorded in Item 3. "REMARKS".

(07/90)

FORM N-2 (back)

Items 4-8 Incl. to be completed for single wall vessels, jackets vessels, or shells of heat exchangers.

4. Shell: Material _____ T.S. _____ Nominal Thickness ___ in. Corrosion Allowance ___ in. Dia. ___ ft. ___ in. Length ___ ft. ___ in
(Kind & Spec. No.) (Min. of Range Specified)

5. Seams: Long _____ H.T.[1] _____ R.T. _____ Efficiency _____%
Girth _____ H.T.[1] _____ R.T. _____ No. of Courses _____

6. Heads: (a) Material _____ T.S. _____ (b) Material _____ T.S. _____

	Location (Top Bottom, Ends)	Thickness	Crown Radius	Knuckle Radius	Elliptical Ratio	Concial Apex Angle	Hemispherical Radius	Flat Diameter	Side to Press. (conv. or conc.)
(a)									
(b)									

If removable, bolts used _____ (Material, Spec. No., T.S. Size Number) Other fastening _____ (Describe or attach sketch)

7. Jacket Closure: _____
(Describe as ogee and weld, bar, etc. If bar give dimensions, if bolts, describe or sketch)
Drop Weight _____
Charpy Impact _____ ft-lb

8. Design pressure[2] 1250 psi at 575 °F at temp of _____ °F

Items 9 and 10 to be completed for tube sections

9. Tube Sheets: Stationary. Material _____ (Kind & Spec. No.) Dia. _____ (Subject to pressure) Thickness ___ in. Attachment _____ (Welded, Bolted)
Floating. Material _____ Dia. _____ Thickness ___ in. Attachment _____

10. Tubes: Material _____ O.D. _____ in. Thickness _____ inches or gage. Number _____ Type _____ (Str. or U)

Items 11 - 14 incl. to be completed for inner chambers of jacketed vessels, or channels of heat exchangers.

11. Shell: Material _____ T.S. _____ Nominal Thickness ___ in. Corrosion Allowance ___ in. Dia. ___ ft. ___ in. Length ___ ft. ___ in.
(Kind & Spec. No.) (Min. of Range Specified)

12. Seams: Long _____ H.T.[1] _____ R.T. _____ Efficiency _____%
Girth _____ H.T.[1] _____ R.T. _____ No. of Courses _____

13. Heads: (a) Material _____ T.S. _____ (b) Material _____ T.S. _____

	Location	Thickness	Crown Radius	Knuckle Radius	Elliptical Ratio	Concial Apex Angle	Hemispherical Radius	Flat Diameter	Side to Press. (conv. or conc.)
(a)	Top, bottom, ends								
(b)	Channel								

If removable, bolts used (a)_____ (b)_____ (c)_____ Other fastening _____ (Describe or attach sketch)
Drop Weight _____
Charpy Impact _____ ft-lb

14. Design pressure[2] _____ psi at _____ °F at temp of _____ °F

Items below to be completed for all vessels where applicable.

15. Safety Valve Outlets: Number _____ Size _____ Location _____

16. Nozzles:

Purpose (Inlet, Outlet, Drain)	Number	Dia. or Size	Type	Material	Thickness	Reinforcement Material	How Attached

17. Inspection Openings: Manholes, No. _____ Size _____ Location _____
Handholes, No. _____ Size _____ Location _____
Threaded, No. _____ Size _____ Location _____

18. Supports: Skirt _____ (Yes or No) Lugs _____ (Number) Legs _____ (Number) Other _____ (Describe) Attached _____ (Where & How)

1 - If Postweld Heat-Treated.
2 - List other internal or external pressure with coincident temperature when applicable.

FORM N-2 NPT CERTIFICATE HOLDERS' DATA REPORT FOR NUCLEAR PART AND APPURTENANCES*
As required by the Provision of the ASME Code Rules, Section III, Div. I
WOT No. 01062290 51

1 Manufactured & Certified by : General Electric Company Nuclear Fuel & Components Manufacturing (GE NF & CM)
2117 Castle Hayne Road, Wilmington, North Carolina 28401
(Name and Address of NPT Certificate Holder)

(b) Manufactured for : WNP 2 Richland, Washington 99352
(Name and Address of N Certificate Holder for completed nuclear component)

2. Identification - Certificate Holder's S/N of Part : A9451 Nat'l Bd. No. N/A

(a) Constructed According to Drawing No: 919D258G003 Rev 18 Dwg. Prepared by D. L. Peterson

(b) Description of Part Inspected: Cylinder Tube & Flange

(c) Applicable ASME Code: Section III , Edition 1974 , Addenda Date W'75 , Case No. 1361-2 Class 1

3. REMARKS: Standard part for use with Reactor. Hydrostatically tested at 1825 psi. min.
(Brief description of service for which component was designed)

Sheet 2 of 2

1. Cap 166B9274P001
SA182 - F316
3/8" thick x 1 1/16" OD

2. Indicator Tube 167B4908P001
SA312 - TP316
3/4" sch 40 - seamless pipe
0.113" wall thickness
1.065" max. dia.

3. Plug 159A1176P001
SA182 - F304
1/4" thick x 0.812" OD

4. Flange 919D610P001 (719E474)
SA182 - F304
3.37" thick x 9 5/8" OD

5. Head 129B3539P005
SA182 - F304
7/8" thick x 2.875" dia.

6. Ring Flange 114B5122P002
SA182 - F304
1" thick x 5.0" OD x 1.75" ID

7. Cap Screw 117C4516P002
SA193 - B6
6 ea. 1/2" dia. on 4 1/8" bolt circle

8. Plug 175A7961P001
SA182 - F304
0.38" thick x 1.307" dia.

9. Nut 114B5460P001
XM - 19 SA479
1.30" thick x 2.62" dia.

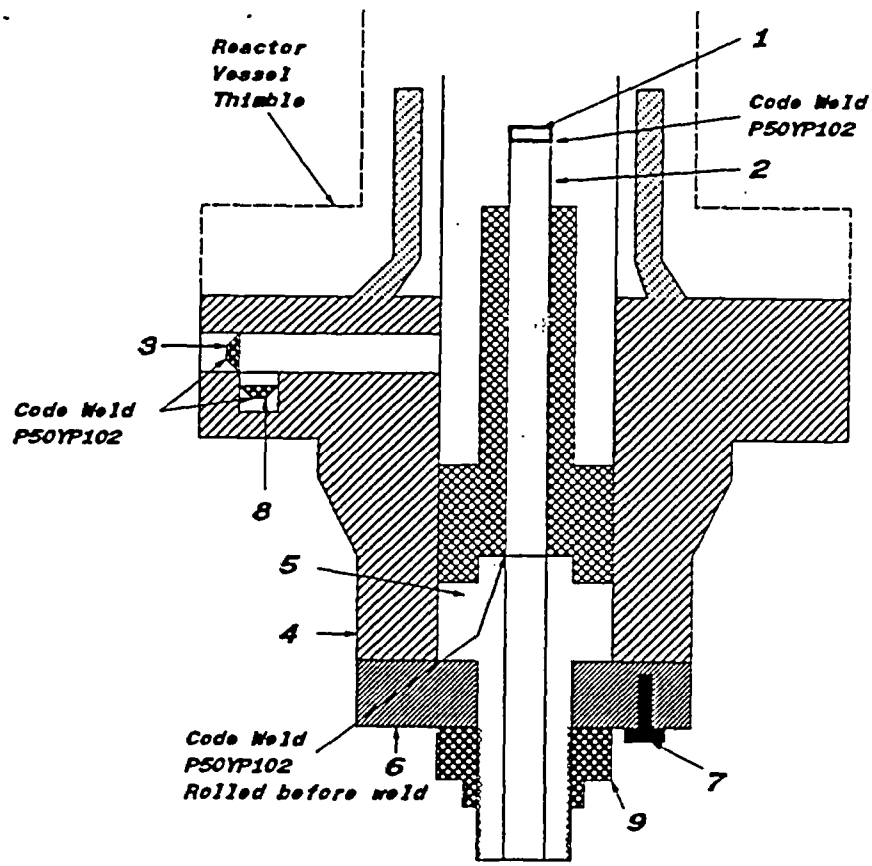

WOT No 01062290 52

ENERGY NORTHWEST
People·Vision·Solutions

FORM NIS-2 OWNER'S REPORT FOR REPAIRS OR REPLACEMENTS
As Required By The Provisions Of The ASME Code Section XI

1. Owner: Energy Northwest
Address: Columbia Generating Station, North Power Plant Loop, Richland, Washington, 99352
2. Plant: Columbia Generating Station
Address: Columbia Generating Station, North Power Plant Loop, Richland, Washington, 99352

Date: 01/06/05
Sheet: 1 Of 1
Unit: Not Applicable

3. (a) Work Performed By: Energy Northwest
(b) Repair Organization P.O. No, Job No, etc.: Energy Northwest
(c) Type Code Symbol Stamp: Not Applicable
(d) Certificate Of Authorization No.: Not Applicable
(e) Expiration Date: Not Applicable
4. Identification Of System: Control Rod Drive (CRD)
5. (a) Applicable Construction Code: ASME Section III, Code Class 1 - See Notes For Code Edition, Addenda And Code Cases
(b) Applicable Edition Of ASME Section XI Utilized For Repairs Or Replacements: 1989 Edition with no Addenda, Code Case: None
6. Identification Of Components Repaired Or Replaced And Replacement Components

Name Of Component	Name Of Manufacturer	Manufacturer's Serial No	National Board No	Other I.D.	Year Built	Repaired, Replaced Or Replacement	ASME Code Stamped (Yes Or No) Code Class
CRD	General Electric	7040	N/A	N/A	1975	----------	Yes, Code Class 1
CT&F	General Electric	7040	N/A	N/A	1975	Replaced	Yes, Code Class 1
CT&F	General Electric	A9421	N/A	N/A	1995	Replacement	Yes, Code Class 1

7. Description Of Work Performed: Overhauled Control Rod Drive (CRD) assembly Serial No 7040. The overhaul work was performed in accordance with plant procedure PPM No 10.5.4 "Control Rod Drive Overhaul" as follows:

1) Disassembled Control Rod Drive (CRD) assembly for overhaul.
2) Performed liquid penetrant (PT) examination on the existing Cylinder Tube And Flange (CT&F) assembly Serial No 7040. Liquid penetrant (PT) examination results unacceptable.
3) Performed VT-3 visual examination on the existing ring flange cap screws. VT-3 visual examination results acceptable.
4) Performed VT-3 visual examination on the existing piston tube nut Serial No 2475. VT-3 visual examination results acceptable.
5) Installed replacement Cylinder Tube And Flange (CT&F) assembly Serial No A9421.
6) Reinstalled existing Piston Tube (PT) assembly Serial No 5540.
7) Reinstalled existing ring flange Serial No 2029.
8) Reinstalled VT-3 visually examined existing piston tube nut Serial No 2475.
9) Reinstalled VT-3 visually examined existing ring flange cap screws.

NOTES -

1) ASME Section III Code Cases are as listed on the N-2 Code Data Report for the Control Rod Drive (CRD) assembly Serial No A9421.
2) The existing Cylinder Tube And Flange (CT&F) assembly Serial No 7040 is certified to comply with ASME Section III, Code Class 1, 1971 Edition with no Addenda.
3) ASME pressure boundary (retaining) parts and materials such as Piston Tube (PT) assembly, ring flange, ring flange cap screws and piston tube nut were reused during CRD overhaul activities with the exception of Cylinder Tube And Flange (CT&F) assembly which was replaced.
4) The replacement Cylinder Tube And Flange (CT&F) assembly Serial No A9421 is certified to comply with ASME Section III, Code Class 1, 1974 Edition with Winter 1975 Addenda.
5) The entire Control Rod Drive (CRD) assembly is identified by the Cylinder Tube And Flange (CT&F) Serial No A9421.

WOT No 01062290 52

ENERGY NORTHWEST
People·Vision·Solutions

FORM NIS-2 OWNER'S REPORT FOR REPAIRS OR REPLACEMENTS (Back)

8 Tests Conducted: Hydrostatic [ ] *Pneumatic* [ ] *Nominal Operating Pressure* [ ] *None* [X]
Test Pressure: Psig *Test Temperature:* °F
Component Design Pressure: Psig *Temperature:* °F

9. Remarks (Applicable Manufacturer's Data Reports to be attached): See attached N-2 Code Data Report for the replacement Cylinder Tube And Flange (CT&F) assembly Serial No A9421.

CERTIFICATE OF COMPLIANCE

We certify that the statements made in this Owner's Report are correct and this replacement *conforms to the rules of the ASME Code, Section XI.*
Type Code Symbol Stamp: Not Applicable
Certificate Of Authorization No.: Not Applicable
Expiration Date: Not Applicable

Prepared By Kuldip Singh - Program Lead Engineer (PLE) *Signed By* Kuldip Singh - Program Lead Engineer (PLE)

Date 1/18/05 *Date* 1/18/05

CERTIFICATE OF INSERVICE INSPECTION

I, the undersigned, holding a valid commission issued by the National Board of Boiler and Pressure Vessel Inspectors and the State of Washington *and employed by* Hartford Steam Boiler Of Connecticut of Hartford, Connecticut *have inspected the components described in this Owner's Report during the period* 7/26/2004 *to* 3/17/2005 *and state to the best of my knowledge and belief, the Owner has performed examinations and taken corrective measures described in this Owner's Report in accordance with the requirements of the ASME Code, Section XI.*
By signing this certificate neither the Inspector nor his employer makes any warranty, expressed or implied, concerning the examinations and corrective measures described in this Owner's Report. Furthermore, neither the Inspector nor his employer shall be liable in any manner for any personal injury or property damage or a loss of any kind arising from or connected with this inspection.

Inspector's Signature *Commissions* 1063542 A,B,N,I
National Board, State, and Endorsements

Date 3/17/2005

WOT No. 01062290 52

FORM N-2 NPT CERTIFICATE HOLDERS' DATA REPORT FOR NUCLEAR PART AND APPURTENANCES*

As required by the Provision of the ASME Code Rules, Section III, Div. I

1. Manufactured & Certified by : General Electric Company Nuclear Fuel & Components Manufacturing (GE NF & CM)

   2117 Castle Hayne Road, Wilmington, North Carolina 28401

   (Name and Address of NPT Certificate Holder)

   (b) Manufactured for : WNP 2 Richland, Washington 99352

   (Name and Address of N Certificate Holder for completed nuclear component)

2. Identification - Certificate Holder's S/N of Part : A9421 Nat'l Bd. No. N/A

   (a) Constructed According to Drawing No: 919D258G003 Rev 18 Dwg. Prepared by D. L. Peterson

   (b) Description of Part Inspected: Cylinder Tube & Flange

   (c) Applicable ASME Code: Section III , Edition 1974 , Addenda Date W'75 , Case No. 1361-2 Class 1

3. REMARKS: Standard part for use with Reactor. Hydrostatically tested at 1825 psi. min.

   (Brief description of service for which component was designed)

Sheet 1 of 2

We certify that the statements in this report are correct and this vessel part or appurtenance as defined in the code conforms to the rules of construction of the ASME Code Section III. (The applicable Designed Specification and Stress Report are not the responsibility of the NPT Certificate Holder for parts. An NPT Certification Holder for appurtenances is responsible for furnishing a separate Design Specification and Stress Report if the appurtenance is not included in the component Design Specification and Stress Report).

Date: 06/27/95 Signed GE - NEBG - NF & CM - QA By

(NPT Certificate Holder) (SC QA Representive)

Certificate of Authorization Expires: 6/16/96 Certification of Authorization No. : NPT N - 1151

Certification of Design for Appurtenance

Design information on file at GE Company, San Jose, California

Stress analysis report on file at GE Company, San Jose, California

DC22A6253 Rev. 1
Design specification certified by Bjorn Haaberg Prof. Eng. State Calif. Reg. No. 15570

DC22A6254 Rev 1
Stress analysis report certified by Edward Yoshio Prof. Eng. State Calif. Reg. No. M018646

Certification of Shop Inspection

I, the undersigned, holding a valid commission by the National Board of Boiler and Pressure Inspectors and/or the State or Province of North Carolina and employed by Department of Labor of State of North Carolina have inspected the part of a pressure vessel described in this Partial Data Report on 6/16, 1995, and state that to the best of my knowledge and belief, the NPT Certificate Holder has constructed this part in accordance with the ASME Code Section III.

By signing this certificate, neither the Inspector nor his employer makes any warranty, expressed or implied, concerning the part described in the Partial Data Report. Furthermore, neither the Inspector nor his employer shall be liable in any manner for any personal injury or property damages or a loss of any kind arising from or connected with this inspection.

6/27, 1995 — Date

Inspector's Signature

NC 1231, Ohio, WC 3686 PA — National Board, State, Province And No.

*Supplemental sheets in form of lists, sketches or drawing may be used provided (1) size is 8-1/2" x 11", (2) information in 1-2 on this Data Report is included on each sheet, and (3) each sheet is numbered and number of sheets is recorded in Item 3. "REMARKS".

(07/90)

FORM N-2 (back)

Items 4-8 Incl. to be completed for single wall vessels, jackets vessels, or shells of heat exchangers.

4. Shell: Material _____ T.S. _____ Nominal Thickness ___ in. Corrosion Allowance ___ in. Dia. ___ ft. ___ in. Length ___ ft. ___
(Kind & Spec. No.) (Min. of Range Specified)

5. Seams: Long _____ H.T.[1] _____ R.T. _____ Efficiency _____%
Girth _____ H.T.[1] _____ R.T. _____ No. of Courses _____

6. Heads: (a) Material _____ T.S. _____ (b) Material _____ T.S. _____

	Location (Top Bottom, Ends)	Thickness	Crown Radius	Knuckle Radius	Elliptical Ratio	Concial Apex Angle	Hemispherical Radius	Flat Diameter	Side to Press. (conv. or conc.)
(a)									
(b)									

If removable, bolts used _____ (Material, Spec. No., T.S. Size Number) Other fastening _____ (Describe or attach sketch)

7. Jacket Closure: _____
(Describe as ogee and weld, bar, etc. If bar give dimensions, if bolts, describe or sketch)

Drop Weight _____
Charpy Impact _____ ft-lb

8. Design pressure[2] _____1250_____ psi at _____575_____ °F at temp of _____ °F

Items 9 and 10 to be completed for tube sections

9. Tube Sheets: Stationary. Material _____ (Kind & Spec. No.) Dia. _____ (Subject to pressure) Thickness ___ in. Attachment _____ (Welded, Bolted)
Floating. Material _____ Dia. _____ Thickness ___ in. Attachment _____

10. Tubes: Material _____ O.D. _____ in. Thickness _____ inches or gage. Number _____ Type _____ (Str. or U)

Items 11 - 14 incl. to be completed for inner chambers of jacketed vessels, or channels of heat exchangers.

11. Shell: Material _____ T.S. _____ Nominal Thickness ___ in. Corrosion Allowance ___ in. Dia. ___ ft. ___ in. Length ___ ft. ___
(Kind & Spec. No.) (Min. of Range Specified)

12. Seams: Long _____ H.T.[1] _____ R.T. _____ Efficiency _____%
Girth _____ H.T.[1] _____ R.T. _____ No. of Courses _____

13. Heads: (a) Material _____ T.S. _____ (b) Material _____ T.S. _____

	Location	Thickness	Crown Radius	Knuckle Radius	Elliptical Ratio	Concial Apex Angle	Hemispherical Radius	Flat Diameter	Side to Press. (conv. or conc.)
(a)	Top, bottom, ends								
(b)	Channel								

If removable, bolts used (a)_____ (b)_____ (c)_____ Other fastening _____ (Describe or attach sketch)

Drop Weight _____
Charpy Impact _____ ft-lb

14. Design pressure[2] _____ psi at _____ °F at temp of _____ °F

Items below to be completed for all vessels where applicable.

15. Safety Valve Outlets: Number _____ Size _____ Location _____

16. Nozzles:

Purpose (Inlet, Outlet, Drain)	Number	Dia. or Size	Type	Material	Thickness	Reinforcement Material	How Attached

17. Inspection Openings: Manholes, No. _____ Size _____ Location _____
Handholes, No. _____ Size _____ Location _____
Threaded, No. _____ Size _____ Location _____

18. Supports: Skirt _____ (Yes or No) Lugs _____ (Number) Legs _____ (Number) Other _____ (Describe) Attached _____ (Where & How)

1 - If Postweld Heat-Treated.
2 - List other internal or external pressure with coincident temperature when applicable.

WOT, No. 01062290 52

FORM N-2 NPT CERTIFICATE HOLDERS' DATA REPORT FOR NUCLEAR PART AND APPURTENANCES*

As required by the Provision of the ASME Code Rules, Section III, Div. I

1/18/05

Manufactured & Certified by : General Electric Company Nuclear Fuel & Components Manufacturing (GE NF & CM)

2117 Castle Hayne Road, Wilmington, North Carolina 28401

(Name and Address of NPT Certificate Holder)

(b) Manufactured for : WNP 2 Richland, Washington 99352

(Name and Address of N Certificate Holder for completed nuclear component)

2. Identification - Certificate Holder's S/N of Part : A9421 Nat'l Bd. No. N/A

(a) Constructed According to Drawing No: 919D258G003 Rev 18 Dwg. Prepared by D. L. Peterson

(b) Description of Part Inspected: Cylinder Tube & Flange

(c) Applicable ASME Code: Section III , Edition 1974 , Addenda Date W'75 , Case No. 1361-2 Class 1

3. REMARKS: Standard part for use with Reactor. Hydrostatically tested at 1825 psi. min.

(Brief description of service for which component was designed)

Sheet 2 of 2

1. Cap 166B9274P001
   SA182 - F316
   3/8" thick x 1 1/16" OD

2. Indicator Tube 167B4908P001
   SA312 - TP316
   3/4" sch 40 - seamless pipe
   0.113" wall thickness
   1.065" max. dia.

3. Plug 159A1176P001
   SA182 - F304
   1/4" thick x 0.812" OD

4. Flange 919D610P001 (719E474)
   SA182 - F304
   3.37" thick x 9 5/8" OD

5. Head 129B3539P005
   SA182 - F304
   7/8" thick x 2.875" dia.

6. Ring Flange 114B5122P002
   SA182 - F304
   1" thick x 5.0" OD x 1.75" ID

7. Cap Screw 117C4516P002
   SA193 - B6
   6 ea. 1/2" dia. on 4 1/8" bolt circle

8. Plug 175A7961P001
   SA182 - F304
   0.38" thick x 1.307" dia.

9. Nut 114B5460P001
   XM - 19 SA479
   1.30" thick x 2.62" dia.

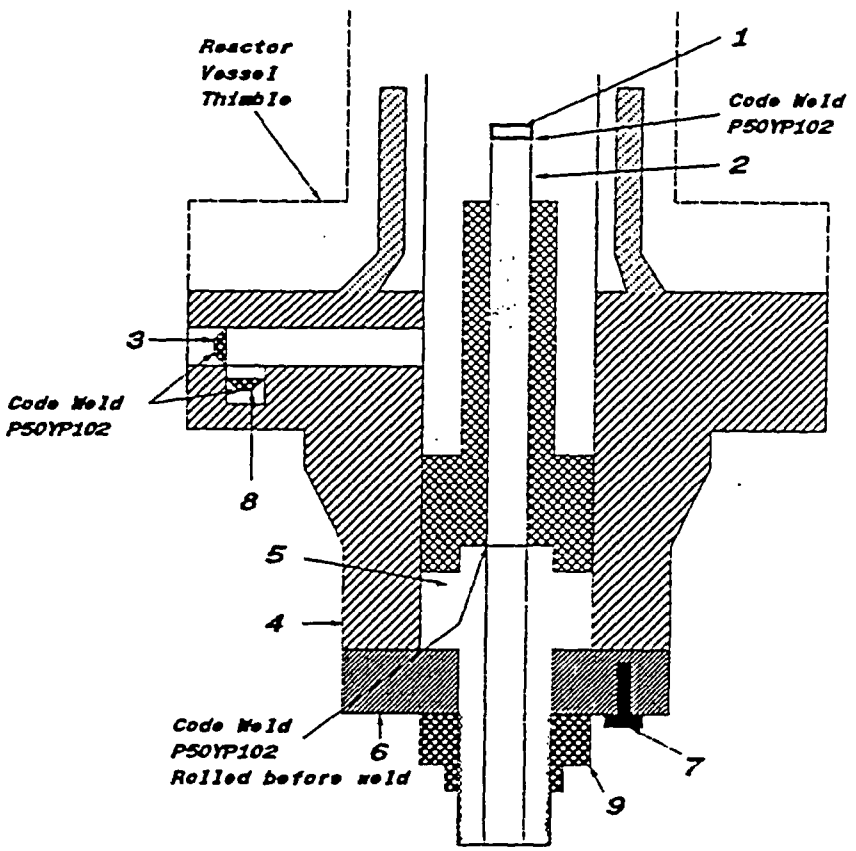

WOT No 01062290 53

ENERGY NORTHWEST
People·Vision·Solutions

FORM NIS-2 OWNER'S REPORT FOR REPAIRS OR REPLACEMENTS
As Required By The Provisions Of The ASME Code Section XI

1. Owner: Energy Northwest
Address: Columbia Generating Station, North Power Plant Loop, Richland, Washington, 99352
2. Plant: Columbia Generating Station
Address: Columbia Generating Station, North Power Plant Loop, Richland, Washington, 99352

Date: 01/06/05
Sheet: 1 Of 1
Unit: Not Applicable

3. (a) Work Performed By: Energy Northwest
(b) Repair Organization P.O. No, Job No, etc.: Energy Northwest
(c) Type Code Symbol Stamp: Not Applicable
(d) Certificate Of Authorization No.: Not Applicable
(e) Expiration Date: Not Applicable
4. Identification Of System: Control Rod Drive (CRD)
5. (a) Applicable Construction Code: ASME Section III, Code Class 1 - See Notes For Code Edition, Addenda And Code Cases
(b) Applicable Edition Of ASME Section XI Utilized For Repairs Or Replacements: 1989 Edition with no Addenda, Code Case: None
6. Identification Of Components Repaired Or Replaced And Replacement Components

Name Of Component	Name Of Manufacturer	Manufacturer's Serial No	National Board No	Other I.D.	Year Built	Repaired, Replaced Or Replacement	ASME Code Stamped (Yes Or No) Code Class
CRD	General Electric	7479	N/A	N/A	1975	----------	Yes, Code Class 1
CT&F	General Electric	7479	N/A	N/A	1975	Replaced	Yes, Code Class 1
CT&F	General Electric	A9544	N/A	N/A	1995	Replacement	Yes, Code Class 1

7. Description Of Work Performed: Overhauled Control Rod Drive (CRD) assembly Serial No 7479. The overhaul work was performed in accordance with plant procedure PPM No 10.5.4 "Control Rod Drive Overhaul" as follows:

1) Disassembled Control Rod Drive (CRD) assembly for overhaul.
2) Performed liquid penetrant (PT) examination on the existing Cylinder Tube And Flange (CT&F) assembly Serial No 7479. Liquid penetrant (PT) examination results unacceptable.
3) Performed VT-3 visual examination on the existing ring flange cap screws. VT-3 visual examination results acceptable.
4) Performed VT-3 visual examination on the existing piston tube nut Serial No 2564. VT-3 visual examination results acceptable.
5) Installed replacement Cylinder Tube And Flange (CT&F) assembly Serial No A9544.
6) Reinstalled existing Piston Tube (PT) assembly Serial No 5305.
7) Reinstalled existing ring flange Serial No 2779.
8) Reinstalled VT-3 visually examined existing piston tube nut Serial No 2564.
9) Reinstalled VT-3 visually examined existing ring flange cap screws.

NOTES -

1) ASME Section III Code Cases are as listed on the N-2 Code Data Report for the Control Rod Drive (CRD) assembly Serial No A9544.
2) The existing Cylinder Tube And Flange (CT&F) assembly Serial No 7479 is certified to comply with ASME Section III, Code Class 1, 1971 Edition with no Addenda.
3) ASME pressure boundary (retaining) parts and materials such as Piston Tube (PT) assembly, ring flange, ring flange cap screws and piston tube nut were reused during CRD overhaul activities with the exception of Cylinder Tube And Flange (CT&F) assembly which was replaced.
4) The replacement Cylinder Tube And Flange (CT&F) assembly Serial No A9544 is certified to comply with ASME Section III, Code Class 1, 1974 Edition with Winter 1975 Addenda.
5) The entire Control Rod Drive (CRD) assembly is identified by the Cylinder Tube And Flange (CT&F) Serial No A9544.

WOT No 01062290 53

ENERGY NORTHWEST
People·Vision·Solutions

FORM NIS-2 OWNER'S REPORT FOR REPAIRS OR REPLACEMENTS (Back)

8 Tests Conducted: Hydrostatic [ ] *Pneumatic* [ ] *Nominal Operating Pressure* [ ] *None* [X]
Test Pressure: Psig *Test Temperature:* °F
Component Design Pressure: Psig *Temperature:* °F

9. Remarks (Applicable Manufacturer's Data Reports to be attached): See attached N-2 Code Data Report for the replacement Cylinder Tube And Flange (CT&F) assembly Serial No A9544.

CERTIFICATE OF COMPLIANCE

We certify that the statements made in this Owner's Report are correct and this replacement *conforms to the rules of the ASME Code, Section XI.*
Type Code Symbol Stamp: Not Applicable
Certificate Of Authorization No.: Not Applicable
Expiration Date: Not Applicable

Prepared By Kuldip Singh - Program Lead Engineer (PLE) *Signed By* Kuldip Singh - Program Lead Engineer (PLE)

Date 1/18/05 *Date* 1/18/05

CERTIFICATE OF INSERVICE INSPECTION

I, the undersigned, holding a valid commission issued by the National Board of Boiler and Pressure Vessel Inspectors and the State of Washington *and employed by* Hartford Steam Boiler Of Connecticut of Hartford, Connecticut *have inspected the components described in this Owner's Report during the period* 7/26/2004 *to* 3/17/2005 *and state to the best of my knowledge and belief, the Owner has performed examinations and taken corrective measures described in this Owner's Report in accordance with the requirements of the ASME Code, Section XI.*
By signing this certificate neither the Inspector nor his employer makes any warranty, expressed or implied, concerning the examinations and corrective measures described in this Owner's Report. Furthermore, neither the Inspector nor his employer shall be liable in any manner for any personal injury or property damage or a loss of any kind arising from or connected with this inspection.

Inspector's Signature *Commissions* 106550 A, B, N, I
National Board, State, and Endorsements

Date 3/17/2005

W07 NO. 01062290 53

FORM N-2 NPT CERTIFICATE HOLDERS' DATA REPORT FOR NUCLEAR PART AND APPURTENANCES*

As required by the Provision of the ASME Code Rules, Section III, Div. I

Pradip Singh 11/18/05

1. Manufactured & Certified by : General Electric Company Nuclear Fuel & Components Manufacturing (GE NF & CM)

   2117 Castle Hayne Road, Wilmington, North Carolina 28401

   (Name and Address of NPT Certificate Holder)

   (b) Manufactured for : WNP 2 Richland, Washington 99352

   (Name and Address of N Certificate Holder for completed nuclear component)

2. Identification - Certificate Holder's S/N of Part : A9544 Nat'l Bd. No. N/A

   (a) Constructed According to Drawing No: 919D258G003 Rev 18 Dwg. Prepared by D. L. Peterson

   (b) Description of Part Inspected: Cylinder Tube & Flange

   (c) Applicable ASME Code: Section III , Edition 1974 , Addenda Date W'75 , Case No. 1361-2 Class 1

3. REMARKS: Standard part for use with Reactor. Hydrostatically tested at 1825 psi. min.

   (Brief description of service for which component was designed)

Sheet 1 of 2

We certify that the statements in this report are correct and this vessel part or appurtenance as defined in the code conforms to the rules of construction of the ASME Code Section III. (The applicable Designed Specification and Stress Report are not the responsibility of the NPT Certificate Holder for parts. An NPT Certification Holder for appurtenances is responsible for furnishing a separate Design Specification and Stress Report if the appurtenance is not included in the component Design Specification and Stress Report).

Date: 06/27/95 Signed GE - NEBG - NF & CM - QA By [signature]

(NPT Certificate Holder) (SC QA Representive)

Certificate of Authorization Expires: 6/16/96 Certification of Authorization No. : NPT N - 1151

Certification of Design for Appurtenance

Design information on file at GE Company, San Jose, California

Stress analysis report on file at GE Company, San Jose, California

DC22A6253 Rev. 1
Design specification certified by Bjorn Haaberg Prof. Eng. State Calif. Reg. No. 15570

DC22A6254 Rev 1
Stress analysis report certified by Edward Yoshio Prof. Eng. State Calif. Reg. No. M018646

Certification of Shop Inspection

I, the undersigned, holding a valid commission by the National Board of Boiler and Pressure Inspectors and/or the State or Province of North Carolina and employed by Department of Labor of State of North Carolina have inspected the part of a pressure vessel described in this Partial Data Report on 5/16, 1995, and state that to the best of my knowledge and belief, the NPT Certificate Holder has constructed this part in accordance with the ASME Code Section III.

By signing this certificate, neither the Inspector nor his employer makes any warranty, expressed or implied, concerning the part described in the Partial Data Report. Furthermore, neither the Inspector nor his employer shall be liable in any manner for any personal injury or property damages or a loss of any kind arising from or connected with this inspection.

6/27, 1995 Jerome P Emrich NC 1231, Ohio, WC 3686 PA

Date Inspector's Signature National Board, State, Province And No.

*Supplemental sheets in form of lists, sketches or drawing may be used provided (1) size is 8-1/2" x 11", (2) information in 1-2 on this Data Report is included on each sheet, and (3) each sheet is numbered and number of sheets is recorded in Item 3. "REMARKS".

(07/90)

FORM N-2 (back)

Items 4-8 Incl. to be completed for single wall vessels, jackets vessels, or shells of heat exchangers.

4. Shell: Material _____ T.S. _____ Nominal Thickness ___ in. Corrosion Allowance ___ in. Dia. ___ ft. ___ in. Length ___ ft. ___.
(Kind & Spec. No.) (Min. of Range Specified)

5. Seams: Long _____ H.T.[1] _____ R.T. _____ Efficiency _____%
Girth _____ H.T.[1] _____ R.T. _____ No. of Courses _____

6. Heads: (a) Material _____ T.S. _____ (b) Material _____ T.S. _____

	Location (Top Bottom, Ends)	Thickness	Crown Radius	Knuckle Radius	Elliptical Ratio	Concial Apex Angle	Hemispherical Radius	Flat Diameter	Side to Press. (conv. or conc.)
(a)									
(b)									

If removable, bolts used _____ (Material, Spec. No., T.S. Size Number) Other fastening _____ (Describe or attach sketch)

7. Jacket Closure: _____
(Describe as ogee and weld, bar, etc. If bar give dimensions, if bolts, describe or sketch)

Drop Weight _____
Charpy Impact _____ ft-lb

8. Design pressure[2] 1250 psi at 575 °F at temp of _____ °F

Items 9 and 10 to be completed for tube sections

9. Tube Sheets: Stationary. Material _____ (Kind & Spec. No.) Dia. _____ (Subject to pressure) Thickness ___ in. Attachment _____ (Welded, Bolted)
Floating. Material _____ Dia. _____ Thickness ___ in. Attachment _____

10. Tubes: Material _____ O.D. _____ in. Thickness _____ inches or gage. Number _____ Type _____ (Str. or U)

Items 11 - 14 incl. to be completed for inner chambers of jacketed vessels, or channels of heat exchangers.

11. Shell: Material _____ T.S. _____ Nominal Thickness ___ in. Corrosion Allowance ___ in. Dia. ___ ft. ___ in. Length ___ ft. ___
(Kind & Spec. No.) (Min. of Range Specified)

12. Seams: Long _____ H.T.[1] _____ R.T. _____ Efficiency _____%
Girth _____ H.T.[1] _____ R.T. _____ No. of Courses _____

13. Heads: (a) Material _____ T.S. _____ (b) Material _____ T.S. _____

	Location	Thickness	Crown Radius	Knuckle Radius	Elliptical Ratio	Concial Apex Angle	Hemispherical Radius	Flat Diameter	Side to Press. (conv. or conc.)
(a)	Top, bottom, ends								
(b)	Channel								

If removable, bolts used (a)_____ (b)_____ (c)_____ Other fastening _____ (Describe or attach sketch)

Drop Weight _____
Charpy Impact _____ ft-lb

14. Design pressure[2] _____ psi at _____ °F at temp of _____ °F

Items below to be completed for all vessels where applicable.

15. Safety Valve Outlets: Number _____ Size _____ Location _____

16. Nozzles:

Purpose (Inlet, Outlet, Drain)	Number	Dia. or Size	Type	Material	Thickness	Reinforcement Material	How Attached

17. Inspection Openings: Manholes, No. _____ Size _____ Location _____
Handholes, No. _____ Size _____ Location _____
Threaded, No. _____ Size _____ Location _____

18. Supports: Skirt _____ (Yes or No) Lugs _____ (Number) Legs _____ (Number) Other _____ (Describe) Attached _____ (Where & How)

1 - If Postweld Heat-Treated.
2 - List other internal or external pressure with coincident temperature when applicable.

WOT No. 01062290 53

FORM N-2 NPT CERTIFICATE HOLDERS' DATA REPORT FOR NUCLEA. ART AND APPURTENANCES*

As required by the Provision of the ASME Code Rules, Section III, Div. I

1. Manufactured & Certified by : General Electric Company Nuclear Fuel & Components Manufacturing (GE NF & CM)

   2117 Castle Hayne Road, Wilmington, North Carolina 28401

   (Name and Address of NPT Certificate Holder)

   (b) Manufactured for : WNP 2 Richland, Washington 99352

   (Name and Address of N Certificate Holder for completed nuclear component)

2. Identification - Certificate Holder's S/N of Part : A9544 Nat'l Bd. No. N/A

   (a) Constructed According to Drawing No: 919D258G003 Rev 18 Dwg. Prepared by D. L. Peterson

   (b) Description of Part Inspected: Cylinder Tube & Flange

   (c) Applicable ASME Code: Section III , Edition 1974 , Addenda Date W'75 , Case No. 1361-2 Class 1

3. REMARKS: Standard part for use with Reactor. Hydrostatically tested at 1825 psi. min.

   (Brief description of service for which component was designed)

Sheet 2 of 2

1. Cap 166B9274P001
   SA182 - F316
   3/8" thick x 1 1/16" OD

2. Indicator Tube 167B4908P001
   SA312 - TP316
   3/4" sch 40 - seamless pipe
   0.113" wall thickness
   1.065" max. dia.

3. Plug 159A1176P001
   SA182 - F304
   1/4" thick x 0.812" OD

4. Flange 919D610P001 (719E474)
   SA182 - F304
   3.37" thick x 9 5/8" OD

5. Head 129B3539P005
   SA182 - F304
   7/8" thick x 2.875" dia.

6. Ring Flange 114B5122P002
   SA182 - F304
   1" thick x 5.0" OD x 1.75" ID

7. Cap Screw 117C4516P002
   SA193 - B6
   6 ea. 1/2" dia. on 4 1/8" bolt circle

8. Plug 175A7961P001
   SA182 - F304
   0.38" thick x 1.307" dia.

9. Nut 114B5460P001
   XM - 19 SA479
   1.30" thick x 2.62" dia.

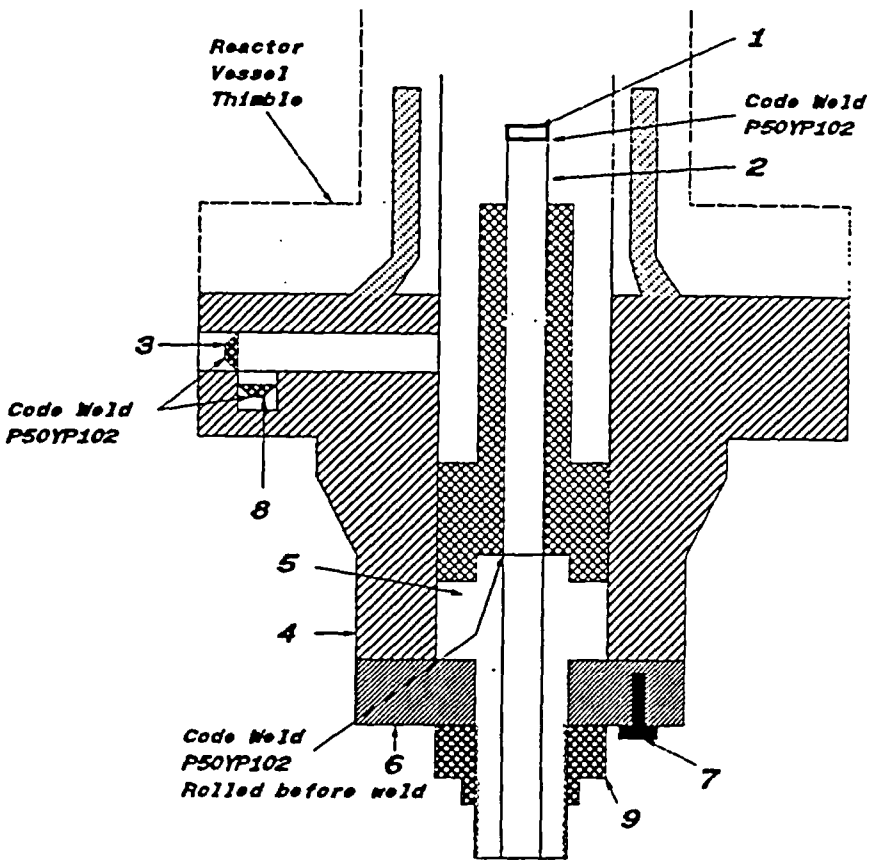

WOT No 01062290 54

ENERGY NORTHWEST
People·Vision·Solutions

FORM NIS-2 OWNER'S REPORT FOR REPAIRS OR REPLACEMENTS
As Required By The Provisions Of The ASME Code Section XI

1. Owner: Energy Northwest
Address: Columbia Generating Station, North Power Plant Loop, Richland, Washington, 99352
2. Plant: Columbia Generating Station
Address: Columbia Generating Station, North Power Plant Loop, Richland, Washington, 99352

Date: 01/06/05
Sheet: 1 Of 1
Unit: Not Applicable

3. (a) Work Performed By: Energy Northwest
(b) Repair Organization P.O. No, Job No, etc.: Energy Northwest
(c) Type Code Symbol Stamp: Not Applicable
(d) Certificate Of Authorization No.: Not Applicable
(e) Expiration Date: Not Applicable
4. Identification Of System: Control Rod Drive (CRD)
5. (a) Applicable Construction Code: ASME Section III, Code Class 1 - See Notes For Code Edition, Addenda And Code Cases
(b) Applicable Edition Of ASME Section XI Utilized For Repairs Or Replacements: 1989 Edition with no Addenda, Code Case: None
6. Identification Of Components Repaired Or Replaced And Replacement Components

Name Of Component	Name Of Manufacturer	Manufacturer's Serial No	National Board No	Other I.D.	Year Built	Repaired, Replaced Or Replacement	ASME Code Stamped (Yes Or No) Code Class
CRD	General Electric	7170	N/A	N/A	1975	----------	Yes, Code Class 1
CT&F	General Electric	7170	N/A	N/A	1975	Replaced	Yes, Code Class 1
CT&F	General Electric	A9481	N/A	N/A	1994	Replacement	Yes, Code Class 1

7. Description Of Work Performed: Overhauled Control Rod Drive (CRD) assembly Serial No 7170. The overhaul work was performed in accordance with plant procedure PPM No 10.5.4 "Control Rod Drive Overhaul" as follows:

1) Disassembled Control Rod Drive (CRD) assembly for overhaul.
2) Performed liquid penetrant (PT) examination on the existing Cylinder Tube And Flange (CT&F) assembly Serial No 7170. Liquid penetrant (PT) examination results unacceptable.
3) Performed VT-3 visual examination on the existing ring flange cap screws. VT-3 visual examination results acceptable.
4) Performed VT-3 visual examination on the existing piston tube nut Serial No 3320. VT-3 visual examination results acceptable.
5) Installed replacement Cylinder Tube And Flange (CT&F) assembly Serial No A9481.
6) Reinstalled existing Piston Tube (PT) assembly Serial No 5837.
7) Reinstalled existing ring flange Serial No 2632.
8) Reinstalled VT-3 visually examined existing piston tube nut Serial No 3320.
9) Reinstalled VT-3 visually examined existing ring flange cap screws.

NOTES -

1) ASME Section III Code Cases are as listed on the N-2 Code Data Report for the Control Rod Drive (CRD) assembly Serial No A9481.
2) The existing Cylinder Tube And Flange (CT&F) assembly Serial No 7170 is certified to comply with ASME Section III, Code Class 1, 1971 Edition with no Addenda.
3) ASME pressure boundary (retaining) parts and materials such as Piston Tube (PT) assembly, ring flange, ring flange cap screws and piston tube nut were reused during CRD overhaul activities with the exception of Cylinder Tube And Flange (CT&F) assembly which was replaced.
4) The replacement Cylinder Tube And Flange (CT&F) assembly Serial No A9481 is certified to comply with ASME Section III, Code Class 1, 1974 Edition with Winter 1975 Addenda.
5) The entire Control Rod Drive (CRD) assembly is identified by the Cylinder Tube And Flange (CT&F) Serial No A9481.

WOT No 01062290 54

ENERGY NORTHWEST
People·Vision·Solutions

FORM NIS-2 OWNER'S REPORT FOR REPAIRS OR REPLACEMENTS (Back)

8 Tests Conducted: Hydrostatic [ ] *Pneumatic* [ ] *Nominal Operating Pressure* [ ] *None* [X]

Test Pressure: Psig — *Test Temperature:* °F

Component Design Pressure: Psig — *Temperature:* °F

9. Remarks (Applicable Manufacturer's Data Reports to be attached): See attached N-2 Code Data Report for the replacement Cylinder Tube And Flange (CT&F) assembly Serial No A9481.

CERTIFICATE OF COMPLIANCE

We certify that the statements made in this Owner's Report are correct and this replacement *conforms to the rules of the ASME Code, Section XI.*

Type Code Symbol Stamp: Not Applicable

Certificate Of Authorization No.: Not Applicable

Expiration Date: Not Applicable

Prepared By Kuldip Singh - Program Lead Engineer (PLE) — *Signed By* Kuldip Singh - Program Lead Engineer (PLE)

Date 1/18/05 — *Date* 1/18/05

CERTIFICATE OF INSERVICE INSPECTION

I, the undersigned, holding a valid commission issued by the National Board of Boiler and Pressure Vessel Inspectors and the State of Washington *and employed by* Hartford Steam Boiler Of Connecticut of Hartford, Connecticut *have inspected the components described in this Owner's Report during the period* 7/26/2004 *to* 3/17/2005 *and state to the best of my knowledge and belief, the Owner has performed examinations and taken corrective measures described in this Owner's Report in accordance with the requirements of the ASME Code, Section XI.*

By signing this certificate neither the Inspector nor his employer makes any warranty, expressed or implied, concerning the examinations and corrective measures described in this Owner's Report. Furthermore, neither the Inspector nor his employer shall be liable in any manner for any personal injury or property damage or a loss of any kind arising from or connected with this inspection.

Inspector's Signature — *Commissions* 10655W A,B,U,I National Board, State, and Endorsements

Date 3/17/2005

WOT NO. 01062290 54

FORM N-2 NPT CERTIFICATE HOLDERS' DATA REPORT FOR NUCLEAR PART AND APPURTENANCES*–
As required by the Provision of the ASME Code Rules, Section III, Div I

1. Manufactured & Certified by : General Electric Company Nuclear Fuel & Components Manufacturing (GE NF & CM)
2117 Castle Hayne Road, Wilmington, North Carolina 28401
(Name and Address of NPT Certificate Holder)

(b) Manufactured for : WNP 2 Richland, Washington 99352
(Name and Address of N Certificate Holder for completed nuclear component)

2. Identification - Certificate Holder's S/N of Part : A9481 Nat'l Bd. No. N/A

(a) Constructed According to Drawing No: 919D258G003 Rev 18 Dwg. Prepared by D. L. Peterson

(b) Description of Part Inspected: Cylinder Tube & Flange

(c) Applicable ASME Code: Section III , Edition 1974 , Addenda Date W75 . Case No. 1361-2 Class 1

3. REMARKS: Standard part for use with Reactor. Hydrostatically tested at 1825 psi. min.
(Brief description of service for which component was designed)

Sheet 1 of 2

We certify that the statements in this report are correct and this vessel part or appurtenance as defined in the code conforms to the rules of construction of the ASME Code Section III. (The applicable Designed Specification and Stress Report are not the responsibility of the NPT Certificate Holder for parts. An NPT Certification Holder for appurtenances is responsible for furnishing a separate Design Specification and Stress Report if the appurtenance is not included in the component Design Specification and Stress Report).

Date: 03/15/94 Signed GE - NEBG - NF & CM - QA By
(NPT Certificate Holder) (SC QA Representive)

Certificate of Authorization Expires: 6/16/96 Certification of Authorization No. : NPT N - 1151

Certification of Design for Appurtenance

Design information on file at GE Company, San Jose, California

Stress analysis report on file at GE Company, San Jose, California

DC22A6253 Rev. 1
Design specification certified by Bjorn Haaberg Prof. Eng. State Calif. Reg. No. 15570

DC22A6254 Rev 1
Stress analysis report certified by Edward Yoshio Prof. Eng. State Calif. Reg. No. M018646

Certification of Shop Inspection

I, the undersigned, holding a valid commission by the National Board of Boiler and Pressure Inspectors and/or the State or Province of North Carolina and employed by Department of Labor of State of North Carolina have inspected the part of a pressure vessel described in this Partial Data Report on 2/17 . 1994 . and state that to the best of my knowledge and belief, the NPT Certificate Holder has constructed this part in accordance with the ASME Code Section III.
By signing this certificate, neither the Inspector nor his employer makes any warranty, expressed or implied, concerning the part described in the Partial Data Report. Furthermore, neither the Inspector nor his employer shall be liable in any manner for any personal injury or property damages or a loss of any kind arising from or connected with this inspection.

3/15 . 1994 Jerome P Ewert NC 1231, Ohio, WC 3686 PA
Date Inspector's Signature National Board, State, Province And No.

*Supplemental sheets in form of lists, sketches or drawing may be used provided (1) size is 8-1/2" x 11", (2) information in 1-2 on this Data Report is included on each sheet, and (3) each sheet is numbered and number of sheets is recorded in Item 3. "REMARKS".

(07/90)

FORM N-2 (back)

Items 4-8 Incl. to be completed for single wall vessels, jackets vessels, or shells of heat exchangers.

4. Shell: Material _____ T.S. _____ Nominal Thickness ___ in. Corrosion Allowance ___ in. Dia. ___ ft. ___ in. Length ___ ft. ___ in.
(Kind & Spec. No.) (Min. of Range Specified)

5. Seams: Long _____ H.T.[1] _____ R.T. _____ Efficiency _____%
Girth _____ H.T.[1] _____ R.T. _____ No. of Courses _____

6. Heads: (a) Material _____ T.S. _____ (b) Material _____ T.S. _____

	Location (Top Bottom, Ends)	Thickness	Crown Radius	Knuckle Racius	Elliptical Ratio	Concial Apex Angle	Hemispherical Radius	Flat Diameter	Side to Press. (conv. or conc.)
(a)									
(b)									

If removable, bolts used _____ (Material, Spec. No., T.S. Size Number) Other fastening _____ (Describe or attach sketch)

7. Jacket Closure: _____
(Describe as ogee and weld, bar, etc. If bar give dimensions, if bolts, describe or sketch)

Drop Weight _____
Charpy Impact _____ ft-lb

8. Design pressure[2] 1250 psi at 575 °F at temp of _____ °F

Items 9 and 10 to be completed for tube sections

9. Tube Sheets: Stationary. Material _____ (Kind & Spec. No.) Dia. _____ (Subject to pressure) Thickness ___ in. Attachment _____ (Welded, Bolted)
Floating. Material _____ Dia. _____ Thickness ___ in. Attachment _____

10. Tubes: Material _____ O.D. _____ in. Thickness _____ Inches or gage. Number _____ Type _____ (Str. or U)

Items 11 - 14 incl. to be completed for inner chambers of jacketed vessels, or channels of heat exchangers.

11. Shell: Material _____ T.S. _____ Nominal Thickness ___ in. Corrosion Allowance ___ in. Dia. ___ ft. ___ in. Length ___ ft. ___ in.
(Kind & Spec. No.) (Min. of Range Specified)

12. Seams: Long _____ H.T.[1] _____ R.T. _____ Efficiency _____%
Girth _____ H.T.[1] _____ R.T. _____ No. of Courses _____

13. Heads: (a) Material _____ T.S. _____ (b) Material _____ T.S. _____

	Location	Thickness	Crown Radius	Knuckle Radius	Elliptical Ratio	Concial Apex Angle	Hemispherical Radius	Flat Diameter	Side to Press. (conv. or conc.)
(a)	Top, bottom, ends								
(b)	Channel								

If removable, bolts used (a)_____ (b)_____ (c)_____ Other fastening _____ (Describe or attach sketch)

Drop Weight _____
Charpy Impact _____ ft-lb

14. Design pressure[2] _____ psi at _____ °F at temp of _____ °F

Items below to be completed for all vessels where applicable.

15. Safety Valve Outlets: Number _____ Size _____ Location _____

16. Nozzles:

Purpose (Inlet, Outlet, Drain)	Number	Dia. or Size	Type	Material	Thickness	Reinforcement Material	How Attached

17. Inspection Openings: Manholes, No. _____ Size _____ Location _____
Handholes, No. _____ Size _____ Location _____
Threaded, No. _____ Size _____ Location _____

18. Supports: Skirt _____ (Yes or No) Lugs _____ (Number) Legs _____ (Number) Other _____ (Describe) Attached _____ (Where & How)

1 - If Postweld Heat-Treated.
2 - List other internal or external pressure with coincident temperature when applicable.

FORM N-2 NPT CERTIFICATE HOLDERS' DATA REPORT FOR NUCLEAR PART AND APPURTENANCES*

As required by the Provision of the ASME Code Rules, Section III, Div. I

W07 01062290 54

1. Manufactured & Certified by : General Electric Company Nuclear Fuel & Components Manufacturing (GE NF & CM)
   2117 Castle Hayne Road, Wilmington, North Carolina 28401
   (Name and Address of NPT Certificate Holder)

   (b) Manufactured for : WNP 2 Richland, Washington 99352
   (Name and Address of N Certificate Holder for completed nuclear component)

2. Identification - Certificate Holder's S/N of Part : A9481 Nat'l Bd. No. N/A

   (a) Constructed According to Drawing No: 919D258G003 Rev 18 Dwg. Prepared by D. L. Peterson

   (b) Description of Part Inspected: Cylinder Tube & Flange

   (c) Applicable ASME Code: Section III , Edition 1974 , Addenda Date W'75 , Case No. 1361-2 Class 1

3. REMARKS: Standard part for use with Reactor. Hydrostatically tested at 1825 psi. min.
   (Brief description of service for which component was designed)

1. Cap 166B9274P001
   SA182 - TP316
   3/8" thick x 1 1/16" OD

2. Indicator Tube 167B4908P001
   SA312 - TP316
   3/4" sch 40 - seamless pipe
   0.113" wall thickness
   1.065" max. dia.

3. Plug 159A1176P001
   SA182 - F304
   1/4" thick x 0.812" OD

4. Flange 919D610P001 (719E474)
   SA182 - F304
   3.37" thick x 9 5/8" OD

5. Head 129B3539P005
   SA182 - F304
   7/8" thick x 2.875" dia.

6. Ring Flange 114B5122P002
   SA182 - F304
   1" thick x 5.0" OD x 1.75" ID

7. Cap Screw 117C4516P002
   SA193 - B6
   6 ea. 1/2" dia. on 4 1/8" bolt circle

8. Plug 175A7961P001
   SA182 - F304
   0.38" thick x 1.307" dia.

9. Nut 114B5460P001
   XM - 19 SA479
   1.30" thick x 2.62" dia.

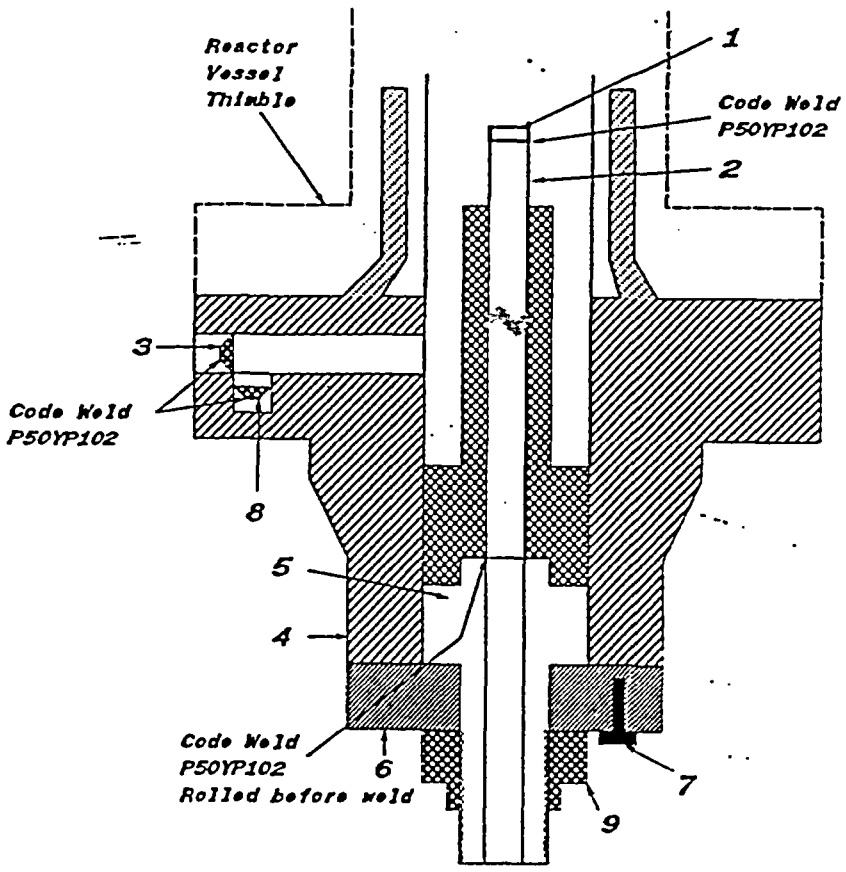

WOT No 01090165 05

ENERGY NORTHWEST
People·Vision·Solutions

FORM NIS-2 OWNER'S REPORT FOR REPAIRS OR REPLACEMENTS
As Required By The Provisions Of The ASME Code Section XI

Date: 06/29/05
Sheet: 1 Of 1
Unit: Not Applicable

1. **Owner:** Energy Northwest
   Address: Columbia Generating Station, North Power Plant Loop, Richland, Washington, 99352
2. **Plant:** Columbia Generating Station
   Address: Columbia Generating Station, North Power Plant Loop, Richland, Washington, 99352
3. **(a) Work Performed By:** Energy Northwest
   (b) Repair Organization P.O. No, Job No, etc.: Energy Northwest
   (c) Type Code Symbol Stamp: Not Applicable
   (d) Certificate Of Authorization No.: Not Applicable
   (e) Expiration Date: Not Applicable
4. **Identification Of System:** Control Rod Drive (CRD) System
5. **(a) Applicable Construction Code:** ASME Section III, Code Class 1, 1974 Edition with Winter 1975 Addenda, Code Case: 1361-2
   (b) Applicable Edition Of ASME Section XI Utilized For Repairs Or Replacements: 1989 Edition with no Addenda, Code Case: None
6. **Identification Of Components Repaired Or Replaced And Replacement Components**

Name Of Component	Name Of Manufacturer	Manufacturer's Serial No	National Board No	Other I.D.	Year Built	Repaired, Replaced Or Replacement	ASME Code Stamped (Yes Or No) Code Class
CRD	GE	A8540	N/A	N/A	1987	Replaced	Yes, Code Class 1
CRD	GE	A8721	N/A	N/A	1988	Replacement	Yes, Code Class 1

7. **Description Of Work Performed:** Replaced Control Rod Drive (CRD) assembly at Core Location 26-51. The replacement work was performed in accordance with plant procedure PPM No 10.5.7 "Control Rod Drive Removal And Replacement" as follows:

1) Removed all eight (8) existing cap screws from the CRD assembly bolted flanged connection.
2) Removed existing CRD assembly, Serial No A8540.
3) Performed VT-1 visual examination on all eight (8) new replacement cap screws. VT-1 visual examination results acceptable.
4) Installed replacement CRD assembly, Serial No A8721.
5) Installed eight (8) VT-1 visually examined new replacement cap screws for the CRD assembly bolted flanged connection.
6) Torqued the cap screws for the CRD assembly bolted flanged connection to the required torque values.
7) Performed VT-2 visual examination during pressure test on CRD assembly bolted flanged connection to confirm pressure boundary integrity of the joint. No leakage was observed during pressure test.

NOTES -

1) The replacement CRD assembly, Serial No A8721 is certified to comply with ASME Section III, Code Class 1, 1974 Edition with Winter 1975 Addenda requirements.
2) New replacement cap screws, SA-540 Gr. B23, Class 4, Heat No 14813.
3) VT-1 visual examination Report No 2RPV-020 for the new replacement cap screws.

WOT No 01090165 05

ENERGY NORTHWEST
People·Vision·Solutions

FORM NIS-2 OWNER'S REPORT FOR REPAIRS OR REPLACEMENTS (Back)

8 Tests Conducted: Hydrostatic ☐ *Pneumatic* ☐ *Nominal Operating Pressure* ☐ *Other* ☒

Test Pressure: 1020 Psig *Test Temperature:* 170° F

Component Design Pressure: 1250 Psig *Temperature:* 575° F

9. Remarks: 1) See attached N-2 Code Data Report for the replacement CRD assembly, Serial No A8721.
2) * Pressure test on the CRD bolted flanged connection - Test pressure of 1020 Psig and test temperature of 170° F recorded during ASME Section XI pressure test in accordance with PPM No OSP-RPV-R801 "Reactor Pressure Vessel Leakage Test".

CERTIFICATE OF COMPLIANCE

We certify that the statements made in this Owner's Report are correct and this replacement *conforms to the rules of the ASME Code, Section XI.*
Type Code Symbol Stamp: Not Applicable
Certificate Of Authorization No.: Not Applicable
Expiration Date: Not Applicable

Prepared By Kuldip Singh
Kuldip Singh - Program Lead Engineer (PLE)

Signed By Kuldip Singh
Kuldip Singh - Program Lead Engineer (PLE)

Date 6/30/05 *Date* 6/30/05

CERTIFICATE OF INSERVICE INSPECTION

I, the undersigned, holding a valid commission issued by the National Board of Boiler and Pressure Vessel Inspectors and the State of Washington *and employed by* Hartford Steam Boiler Of Connecticut of Hartford, Connecticut *have inspected the components described in this Owner's Report during the period* 5-6-2005 *to* 7-7-2005 *and state to the best of my knowledge and belief, the Owner has performed examinations and taken corrective measures described in this Owner's Report in accordance with the requirements of the ASME Code, Section XI.*
By signing this certificate neither the Inspector nor his employer makes any warranty, expressed or implied, concerning the examinations and corrective measures described in this Owner's Report. Furthermore, neither the Inspector nor his employer shall be liable in any manner for any personal injury or property damage or a loss of any kind arising from or connected with this inspection.

Inspector's Signature

Commissions 10655W A, B, N, I
National Board, State, and Endorsements

Date 7-7-2005

WOT No. 01090165 05

Philip Sims 6/30/05

FORM N-2 NPT CERTIFICATE HOLDERS' DATA REPORT FOR NUCLEAR PART AND APPURTENANCES*
As required by the Provision of the ASME Code Rules, Section III, Div. 1

1. Manufactured & Certified by: GE Company, 2117 Castle Hayne Rd., Wilmington, N.C. 28402
(Name and Address of NPT Certificate Holder)

(b) Manufactured for: WNP-2, RICHLAND, Wa. 99352
(Name and Address of N Certificate Holder for completed nuclear component)

2. Identification-Certificate Holders's S/N of Part: A8721 Nat'l Bd. No. N/A

(a) Constructed According to Drawing No: 919D258G003 Dwg. Prepared by D. L. Peterson

(b) Description of Part Inspected: CYLINDER TUBE & FLANGE

(c) Applicable ASME Code: Section III, Edition 1974, Addenda Date W'75 Case No. 1361-2 Class 1

3. REMARKS: Sub-assembly of Control Rod Drive for use with reactor.
(Brief description of service for which component was designed)
Hydrostatically tested at 1825 psi. min.

*Sheet 1 of 2

We certify that the statements in this report are correct and this vessel part or appurtenance as defined in the code conforms to the rules of construction of the ASME Code Section III. (The applicable Designed Specification and Stress Report are not the responsibility of the NPT Certificate Holder for parts. An NPT Certification Holder for appurtenances is responsible for furnishing a separate Design Specification and Stress Report if the appurtenance is not included in the component Design Specification and Stress Report).

DATE: 12/31, 19 88 Signed GE-NEBG-NF&CM-QA By
(NPT Certificate Holder)

Certificate Of Authorization Expires: 6/16/90 Certification of Authorization No.: NPT N-1151

CERTIFICATION OF DESIGN FOR APPURTENANCE

Design information on file at GE COMPANY, SAN JOSE, CALIFORNIA

Stress analysis report on file at GE COMPANY, SAN JOSE, CALIFORNIA

DC22A6253 Rev. 0
Design specification certified by BJORN HAABERG Prof. Eng. State CALIF. Reg. No. 15570

DC22A6254 Rev. 0.
Stress analysis report certified by EDWARD YOSHIO Prof. Eng. State CALIF. Reg. No. M018646

CERTIFICATION OF SHOP INSPECTION

I, the undersigned, holding a valid commission by the National Board of Boiler and Pressure Inspectors and/or the State or Province of NORTH CAROLINA and employed by DEPARTMENT OF LABOR of STATE OF NORTH CAROLINA have inspected the part of a pressure vessel described in this Partial Data Report on 12. 31 1988, and state that to the best of my knowledge and belief, the NPT Certificate Holder has constructed this part in accordance with the ASME Code Section III.

By signing this certificate, neither the Inspector nor his employer makes any warranty, expressed or implied, concerning the part described in the Partial Data Report. Furthermore, neither the Inspector nor his employer shall be liable in any manner for any personal injury or property damages or a loss of any kind arising from or connected with this inspection.

12-31, 19 88 NC 779, PA WC2L60, OHIO

DATE Inspector's Signature National Board, State, Province and No.

*Supplemental sheets in form of lists, sketches or drawing may be used provided (1) size is 8-1/2" X 11", (2) information in 1-2 on this Data Report is included on each sheet, and (3) each sheet is numbered and number of sheets is recorded in Item 3. "REMARKS"

(10/77)

VERIFIED & ACCEPTED 1-18-89
R.I. Inspector Date

FORM M-2 (back)

Items 4-8 Incl. to be completed for single wall vessels, jackets vessels, or shells of heat exchangers.

4. Shell: Material_____ T.S._____ Nominal Thickness___in. Corrosion Allowance____in Dia.____ft.___in. Length___ft.____in.
(Kind & Spec.No) (Min.ofRange Specified)

5. Seams: Long_____ H.T.[1]_____ R.T._____ Efficiency_____%

Girth_____ H.T.[1]_____ R.T._____ No. of Courses_____

6. Heads: (a) Material_____ T.S._____ (b)Material_____ T.S._____

Location (Top Bottom,Ends)	Thickness	Crown Radius	Knuckle Radius	Elliptical Ratio	Concial Apex Angle	Hemispherical Radius	Flat Diameter	Side to Press. (conv.or conc.)
(a)_____	_____	_____	_____	_____	_____	_____	_____	_____
(b)_____	_____	_____	_____	_____	_____	_____	_____	_____

If removable, bolts used_____ Other fastening_____
(Material,Spec.No., T.S. Size Number) (Describe or attach sketch)

7. Jacket Closure:_____
(Describe as ogee and weld,bar,etc. If bar give dimensions, if bolts, describe or shetch)

8. Design Pressure [2] 1250 psi at 575 °F Drop Weight_____ Charpy Impact_____ ft-lb at temp. of_____ °F

Items 9 and 10 to be completed for tube sections.

9. Tube Sheets: Stationary Mat'l._____ Dia._____ Thickness__in. Attachment_____
(Kind of Spec. No.) (Subj.to Press.) (Welded, Bolted)
Floating. Material _____ Dia._____ Thickness____in. Attachment_____

10. Tubes: Material_____ O.D.____in. Thickness_____ inches or gage. Number____ Type_____
(Str. or U)

Items 11-14 incl. to be completed for inner chambers of jacketed vessels, or channels of heat exchangers

11. Shell: Material____ T.S.____ Nominal Thickness___in. Corrosion Allowance___in. Dia.___ft.___in___Length___ft.___in.
(Kind&Spec.No.) (Min.ofRange Specified)

12. Seams: Long_____ H.T.[1]_____ R.T._____ Efficiency_____%
Girth_____ H.T.[1]_____ R.T._____ No. of Courses_____

13. Heads (a) Material_____ T.S._____ (b)Material_____ T.S._____

Location	Ticnkess	Crown Radius	Knucle Radius	Elliptical Ratio	Concial Apex Angle	Hemispherical Radius	Fat Diameter	Side to Press (Conv.or Conc.)
(a)Top, Bottom, End	_____	_____	_____	_____	_____	_____	_____	_____
(b)Channel	_____	_____	_____	_____	_____	_____	_____	_____

If removable, bolts used (a)_____ (b)_____ (c)____ Other Fastening_____
(Describe or attach sketch

14. Design pressure[2]_____ psi at_____ °F Drop Weight_____, Charpy Impact_____ ft-lb at temp. of _____ °F

Items below to be completed for all vessels where applicable.

15. Safety Valve Outlets: Number_____ Size_____ Location_____

16. Nozzles:

Purpose (Inlet Outlet, Drain)	Number	Dia or Size	Type	Material	Thickness	Reinforcement Material	Attached
_____	_____	_____	_____	_____	_____	_____	_____
_____	_____	_____	_____	_____	_____	_____	_____

17. Inspection Openings: Manholes, No._____ Size_____ Location_____
Handles, No._____ Size_____ Location_____
Threaded, No._____ Size_____ Location_____

18. Supports: Shirt_____ Lugs_____ Legs_____ Other_____ Attached_____
(Yes or No) (Number) (Number) (Describe) (Where & How)

[1] If Postweld Heat-Treated.

[2] List other internal or external pressure with conincident temperature when applicalbe.

WOT No. 01090165 05
Philip Ruiz 6/30/05

FORM N-2 NPT CERTIFICATE HOLDERS' DATA REPORT FOR NUCLEAR PART AND APPURTENANCES*
As required by the Provision of the ASME Code Rules, Section III, Div. I

.. Manufactured & Certified by: GE Company, 2117 Castle Hayne Rd., Wilmington, N.C. 28402
(Name and Address of NPT Certificate Holder)

(b) Manufactured for: WNP-2, RICHLAND, Wa. 99352
(Name and Address of N Certificate Holder for completed nuclear component)

.. Identification-Certificate Holders's S/N of Part: A8721 Nat'l Bd. N. N/A

(a) Constructed According to Drawing No: 919D258G003 Dwg. Prepared by D. L. Peterson

(b) Description of Part Inspected: CYLINDER TUBE & FLANGE

(C) Applicable ASME Code: Section III, Edition 1974, Addenda Date W'75, Case No. 1361-2 Class 1

REMARKS: Sub-assembly of Control Rod Drive for use with reactor.
(Brief description of service for which component was designed)
Hydrostatically tested at 1825 psi. min.

*Sheet 2 of 2

1. Cap 167A2343P1
   SA182-F304
   3/8 thick X 1 1/16 OD

2. Indicator Tube 104B1336P3
   SA312-TP316
   3/4 sch 40-seamless pipe
   0.113 wall thickness
   1.065 max. dia.

3. Plug 159A1176P1
   SA182-F304
   1/4 thick x 0.812 OD

4. Flange 919D610P1 (719E474)
   SA182-F304
   3.37 thick x 9 5/8 OD

5. Head 129B3539P3, P5
   SA182-F304
   7/8 thick x 2.875 Dia.

6. Ring Flange 114B5122P2
   SA182-F304
   1" thick x 5.0 OD x 1.75 ID

7. Cap Screw 117C4516P2
   SA193-B6
   6 ea. 1/2 dia. on 4 1/8 bolt circle

8. Plug 175A7961P1
   SA182-F304
   0.38 thick x 1.307 dia.

. Nut 114B5460P1
   SA193-B8A
   1.30 thick x 2.62 dia.

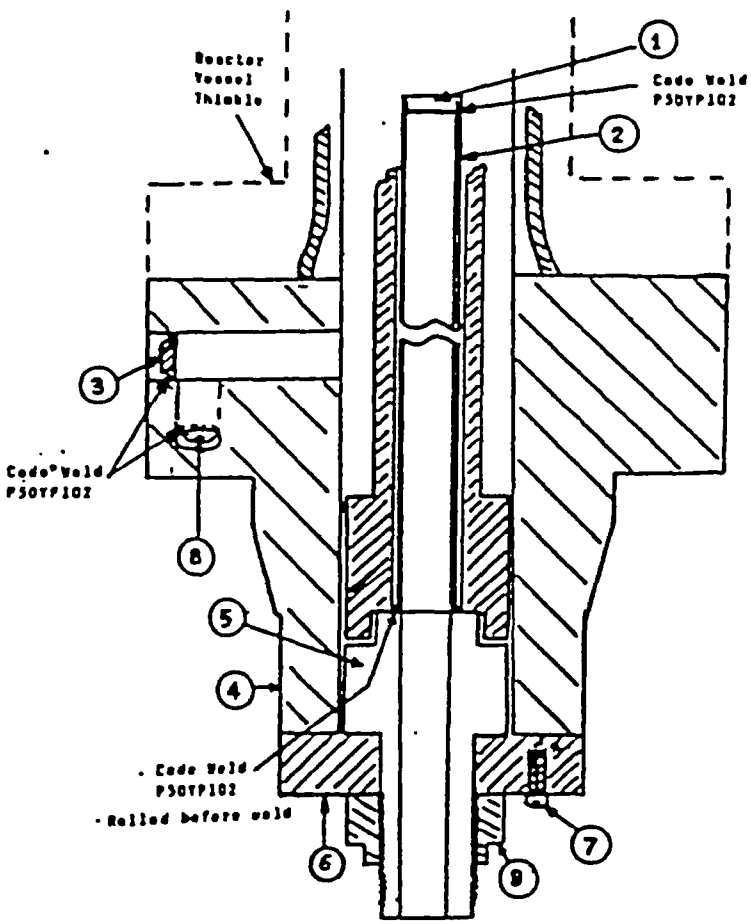

WOT No 01090165 06

ENERGY NORTHWEST
People·Vision·Solutions

FORM NIS-2 OWNER'S REPORT FOR REPAIRS OR REPLACEMENTS
As Required By The Provisions Of The ASME Code Section XI

Date: 07/11/05
Sheet: 1 Of 1
Unit: Not Applicable

1. **Owner:** Energy Northwest
   Address: Columbia Generating Station, North Power Plant Loop, Richland, Washington, 99352
2. **Plant:** Columbia Generating Station
   Address: Columbia Generating Station, North Power Plant Loop, Richland, Washington, 99352
3. **(a) Work Performed By:** Energy Northwest
   (b) Repair Organization P.O. No, Job No, etc.: Energy Northwest
   (c) Type Code Symbol Stamp: Not Applicable
   (d) Certificate Of Authorization No.: Not Applicable
   (e) Expiration Date: Not Applicable
4. **Identification Of System:** Control Rod Drive (CRD) System
5. **(a) Applicable Construction Code:** ASME Section III, Code Class 1, 1971 Edition with no Addenda, Code Case: 1361-1
   (b) Applicable Edition Of ASME Section XI Utilized For Repairs Or Replacements: 1989 Edition with no Addenda, Code Case: None
6. **Identification Of Components Repaired Or Replaced And Replacement Components**

Name Of Component	Name Of Manufacturer	Manufacturer's Serial No	National Board No	Other I.D.	Year Built	Repaired, Replaced Or Replacement	ASME Code Stamped (Yes Or No) Code Class
CRD	GE	A8517	N/A	N/A	1987	Replaced	Yes, Code Class 1
CRD	GE	6389	N/A	N/A	1974	Replacement	Yes, Code Class 1

7. **Description Of Work Performed:** Replaced Control Rod Drive (CRD) assembly at Core Location 10-51. The replacement work was performed in accordance with plant procedure PPM No 10.5.7 "Control Rod Drive Removal And Replacement" as follows:

1) Removed all eight (8) existing cap screws from the CRD assembly bolted flanged connection.
2) Removed existing CRD assembly, Serial No A8517.
3) Performed VT-1 visual examination on all eight (8) new replacement cap screws. VT-1 visual examination results acceptable.
4) Installed replacement CRD assembly, Serial No 6389.
5) Installed eight (8) VT-1 visually examined new replacement cap screws for the CRD assembly bolted flanged connection.
6) Torqued the cap screws for the CRD assembly bolted flanged connection to the required torque values.
7) Performed VT-2 visual examination during pressure test on CRD assembly bolted flanged connection to confirm pressure boundary integrity of the joint. No leakage was observed during pressure test.

NOTES -

1) The replacement CRD assembly, Serial No 6389 is certified to comply with ASME Section III, Code Class 1, 1971 Edition with no Addenda requirements.
2) New replacement cap screws, SA-540 Gr. B23, Class 4, Heat No 14813.
3) VT-1 visual examination Report No 2RPV-020 for the new replacement cap screws.

WOT No 01090165 06

ENERGY NORTHWEST
People·Vision·Solutions

FORM NIS-2 OWNER'S REPORT FOR REPAIRS OR REPLACEMENTS (Back)

8 Tests Conducted: Hydrostatic ☐ *Pneumatic* ☐ *Nominal Operating Pressure* ☐ *Other* ☒

Test Pressure: 1020 Psig *Test Temperature:* 170° F

Component Design Pressure: 1250 Psig *Temperature:* 575° F

9. Remarks (Applicable Manufacturer's Data Reports to be attached): 1) See attached N-2 Code Data Report for the replacement CRD assembly, Serial No 6389. 2) * Pressure test on the CRD bolted flanged connection - Test pressure of 1020 Psig and test temperature of 170° F recorded during ASME Section XI pressure test in accordance with PPM No OSP-RPV-R801 "Reactor Pressure Vessel Leakage Test".

CERTIFICATE OF COMPLIANCE

We certify that the statements made in this Owner's Report are correct and this replacement *conforms to the rules of the ASME Code, Section XI.*

Type Code Symbol Stamp: Not Applicable

Certificate Of Authorization No.: Not Applicable

Expiration Date: Not Applicable

Prepared By Kuldip Singh - Program Lead Engineer (PLE) *Signed By* Kuldip Singh - Program Lead Engineer (PLE)

Date 7/11/05 *Date* 7/11/05.

CERTIFICATE OF INSERVICE INSPECTION

I, the undersigned, holding a valid commission issued by the National Board of Boiler and Pressure Vessel Inspectors and the State of Washington *and employed by* Hartford Steam Boiler Of Connecticut of Hartford, Connecticut *have inspected the components described in this Owner's Report during the period* 5-6-2005 *to* 7-11-2005 *and state to the best of my knowledge and belief, the Owner has performed examinations and taken corrective measures described in this Owner's Report in accordance with the requirements of the ASME Code, Section XI.*

By signing this certificate neither the Inspector nor his employer makes any warranty, expressed or implied, concerning the examinations and corrective measures described in this Owner's Report. Furthermore, neither the Inspector nor his employer shall be liable in any manner for any personal injury or property damage or a loss of any kind arising from or connected with this inspection.

Inspectors Signature *Commissions* 10655W A, B, N, I
National Board, State, and Endorsements

Date _____

WOT No. 01090165 06

FORM N-2 MANUFACTURERS DATA REPORT FOR NUCLEAR PART AND APPURTENANCES

As required by the Provisions of the ASME Code Rules

1. (a) Manufactured by General Electric Company, Castle Hayne Rd., Wilmington, N. C.
(Name and address of Manufacturer of part)

(b) Manufactured for General Electric Company, San Jose, California
(Name and address of Manufacturer of completed nuclear component)

2. Identification-Manufacturer's Serial No. of Part 6389 Nat'l Bd. No.

(a) Constructed According to Drawing No. 761E387G2 Drawing Prepared by D. L. Peterson

(b) Description of Part Inspected Control Rod Drive, Model #7RDB144 C1

(c) Applicable ASME Code Section III, Edition 1971, Addenda date None, Case No. 1361-1 Class 1

3. Remarks: Standard part for use with Reactor. Hydrostatically tested at 1820 psi minimum.
(Brief description of service for which component was designed)

FOR INFORMATION ONLY

We certify that the statements made in this report are correct and this vessel part or appurtenance as defined in the Code conforms to the rules of construction of the ASME Code Section III.
(The applicable Design Specification and Stress Report are not the responsibility of the part Manufacturer. An appurtenance Manufacturer is responsible for furnishing a separate Design Specification and Stress Report if the appurtenance is not included in the component Design Specification and Stress Report.)

Date October 28 19 74 Signed GE, BWRSD - REM (Manufacturer) By

Certificate of Authorization Expires June 20, 1975 Certificate of Authorization No. NPT - 462

CERTIFICATION OF DESIGN FOR APPURTENANCE (when applicable)

Design information on file at General Electric Co., BWRSD-REM, Castle Hayne Rd., Wilmington

Stress analysis report on file at General Electric Co., BWRSD-REM, Castle Hayne Rd., Wilmington

Design specifications certified by Vernon W. Pence Prof. Eng. State Calif. Reg. No. 14488

Stress analysis report certified by Vernon W. Pence Prof. Eng. State Calif. Reg. No. 14488

CERTIFICATE OF SHOP INSPECTION

I, the undersigned, holding a valid commission issued by the National Board of Boiler and Pressure Vessel Inspectors and/or the State or Province of North Carolina and employed by Department of Labor of State of North Carolina have inspected the part of a pressure vessel described in this Manufacturer's Partial Data Report on October 28 19 74, and state that to the best of my knowledge and belief, the Manufacturer has constructed this part in accordance with the ASME Code Section III.

By signing this certificate, neither the Inspector nor his employer makes any warranty, expressed or implied, concerning the part described in this Manufacturer's Partial Data Report. Furthermore, neither the Inspector nor his employer shall be liable in any manner for any personal injury or property damage or a loss of any kind arising from or connected with this inspection.

Date October 28 19 74

Inspector's Signature Commissions NC 723, PA. EC 1766, Ohio
National Board, State, Province and No.

ZX00367196

761E387G002
6389

FORM N-2 (back)

Items 1–8 Incl. to be completed for single wall vessels, jackets of jacketed vessels, or shells of heat exchangers.

4. Shell: Material _____ (Kind & Spec. No.) T.S. _____ (Min. of Range Specified) Nominal Thickness ____ in. Corrosion Allowance ____ in. Dia. ____ ft. ____ in. Length ____ ft. ____ in.

5. Seams: Long _____ H.T.[1] _____ R.T. _____ Efficiency _____ %

Girth _____ H.T.[1] _____ R.T. _____ No. of Courses _____

6. Heads: (a) Material _____ T.S. _____ (b) Material _____ T.S. _____

	Location (Top, bottom, ends)	Thickness	Crown Radius	Knuckle Radius	Elliptical Ratio	Conical Apex Angle	Hemispherical Radius	Flat Diameter	Side to Press. (Conv. or Conc.)
(a)									
(b)									

If removable, bolts used _____ (Material, Spec. No., T.S., Size, Number) Other fastening _____ (Describe or attach sketch)

7. Jacket Closure: _____ (Describe as ogee and weld, bar, etc. If bar give dimensions, if bolted, describe or sketch)

8. Design pressure[2] 1250 psi at 575 °F

Drop Weight _____
Charpy Impact _____ ft-lb at temp. of _____ °F

Items 9 and 10 to be completed for tube sections

FOR INFORMATION ONLY

9. Tube Sheets: Stationary. Material _____ (Kind & Spec. No.) Dia. _____ (Subject to pressure) Thickness ____ in. Attachment _____ (Welded, Bolted)

Floating. Material _____ Dia. _____ Thickness ____ in. Attachment _____

10. Tubes: Material _____ O.D. ____ in. Thickness _____ inches or gage. Number _____ Type _____ (Str. or U)

Items 11–14 incl. to be completed for inner chambers of jacketed vessels, or channels of heat exchangers.

11. Shell: Material _____ (Kind & Spec. No.) T.S. _____ (Min. of Range Specified) Nominal Thickness ____ in. Corrosion Allowance ____ in. Dia. ____ ft. ____ in. Length ____ ft. ____ in.

12. Seams: Long _____ H.T.[1] _____ R.T. _____ Efficiency _____ %

Girth _____ H.T.[1] _____ R.T. _____ No. of Courses _____

13. Heads (a) Material _____ T.S. _____ (b) Material _____ T.S. _____

	Location	Thickness	Crown Radius	Knuckle Radius	Elliptical Ratio	Conical Apex Angle	Hemispherical Radius	Flat Diameter	Side to Press. (Conv. or Conc.)
(a)	Top, bottom, ends								
(b)	Channel								

If removable, bolts used (a) _____ (b) _____ (c) _____ Other fastening _____ (Describe or attach sketch)

14. Design pressure[2] _____ psi at _____ °F

Drop Weight _____
Charpy Impact _____ ft-lb at temp. of _____ °F

Items below to be completed for all vessels where applicable.

15. Safety Valve Outlets: Number _____ Size _____ Location _____

16. Nozzles:

Purpose (Inlet, Outlet, Drain)	Number	Dia. or Size	Type	Material	Thickness	Reinforcement Material	How Attached

17. Inspection Openings: Manholes, No. _____ Size _____ Location _____
Handholes, No. _____ Size _____ Location _____
Threaded, No. _____ Size _____ Location _____

7X0036719

18. Supports: Skirt _____ (Yes or No) Lugs _____ (Number) Legs _____ (Number) Other _____ (Describe) Attached _____ (Where & How)

[1] If Postweld Heat-Treated.
[2] List other internal or external pressure with coincident temperature when applicable.

WOT No 01090165 07

ENERGY NORTHWEST
People·Vision·Solutions

FORM NIS-2 OWNER'S REPORT FOR REPAIRS OR REPLACEMENTS
As Required By The Provisions Of The ASME Code Section XI

Date: 06/29/05
Sheet: 1 Of 1
Unit: Not Applicable

1. **Owner:** Energy Northwest
   Address: Columbia Generating Station, North Power Plant Loop, Richland, Washington, 99352
2. **Plant:** Columbia Generating Station
   Address: Columbia Generating Station, North Power Plant Loop, Richland, Washington, 99352
3. **(a) Work Performed By:** Energy Northwest
   (b) Repair Organization P.O. No, Job No, etc.: Energy Northwest
   (c) Type Code Symbol Stamp: Not Applicable
   (d) Certificate Of Authorization No.: Not Applicable
   (e) Expiration Date: Not Applicable
4. **Identification Of System:** Control Rod Drive (CRD) System
5. **(a) Applicable Construction Code:** ASME Section III, Code Class 1, 1974 Edition with Winter 1975 Addenda, Code Case: 1361-2
   (b) Applicable Edition Of ASME Section XI Utilized For Repairs Or Replacements: 1989 Edition with no Addenda, Code Case: None
6. **Identification Of Components Repaired Or Replaced And Replacement Components**

Name Of Component	Name Of Manufacturer	Manufacturer's Serial No	National Board No	Other I.D.	Year Built	Repaired, Replaced Or Replacement	ASME Code Stamped (Yes Or No) Code Class
CRD	GE	6243	N/A	N/A	1974	Replaced	Yes, Code Class 1
CRD	GE	A9454	N/A	N/A	1995	Replacement	Yes, Code Class 1

7. **Description Of Work Performed:** Replaced Control Rod Drive (CRD) assembly at Core Location 06-43. The replacement work was performed in accordance with plant procedure PPM No 10.5.7 "Control Rod Drive Removal And Replacement" as follows:

1) Removed all eight (8) existing cap screws from the CRD assembly bolted flanged connection.
2) Removed existing CRD assembly, Serial No 6243.
3) Performed VT-1 visual examination on all eight (8) new replacement cap screws. VT-1 visual examination results acceptable.
4) Installed replacement CRD assembly, Serial No A9454.
5) Installed eight (8) VT-1 visually examined new replacement cap screws for the CRD assembly bolted flanged connection.
6) Torqued the cap screws for the CRD assembly bolted flanged connection to the required torque values.
7) Performed VT-2 visual examination during pressure test on CRD assembly bolted flanged connection to confirm pressure boundary integrity of the joint. No leakage was observed during pressure test.

NOTES -

1) The replacement CRD assembly, Serial No A9454 is certified to comply with ASME Section III, Code Class 1, 1974 Edition with Winter 1975 Addenda requirements.
2) New replacement cap screws, SA-540 Gr. B23, Class 4, Heat No 14813.
3) VT-1 visual examination Report No 2RPV-020 for the new replacement cap screws.

WOT No 01090165 07

ENERGY NORTHWEST
People·Vision·Solutions

FORM NIS-2 OWNER'S REPORT FOR REPAIRS OR REPLACEMENTS (Back)

8 Tests Conducted: Hydrostatic ☐ *Pneumatic* ☐ *Nominal Operating Pressure* ☐ *Other* ☒

Test Pressure: 1020 Psig — *Test Temperature:* 170° F

Component Design Pressure: 1250 Psig — *Temperature:* 575° F

9. Remarks: 1) See attached N-2 Code Data Report for the replacement CRD assembly, Serial No A9454.
2) * Pressure test on the CRD bolted flanged connection - Test pressure of 1020 Psig and test temperature of 170° F recorded during ASME Section XI pressure test in accordance with PPM No OSP-RPV-R801 "Reactor Pressure Vessel Leakage Test".

CERTIFICATE OF COMPLIANCE

We certify that the statements made in this Owner's Report are correct and this replacement *conforms to the rules of the ASME Code, Section XI.*
Type Code Symbol Stamp: Not Applicable
Certificate Of Authorization No.: Not Applicable
Expiration Date: Not Applicable

Prepared By Kuldip Singh — Kuldip Singh - Program Lead Engineer (PLE)
Date 6/30/05

Signed By Kuldip Singh — Kuldip Singh - Program Lead Engineer (PLE)
Date 6/30/05

CERTIFICATE OF INSERVICE INSPECTION

I, the undersigned, holding a valid commission issued by the National Board of Boiler and Pressure Vessel Inspectors and the State of Washington *and employed by* Hartford Steam Boiler Of Connecticut of Hartford, Connecticut *have inspected the components described in this Owner's Report during the period* 5-6-05 *to* 7-7-05 *and state to the best of my knowledge and belief, the Owner has performed examinations and taken corrective measures described in this Owner's Report in accordance with the requirements of the ASME Code, Section XI.*
By signing this certificate neither the Inspector nor his employer makes any warranty, expressed or implied, concerning the examinations and corrective measures described in this Owner's Report. Furthermore, neither the Inspector nor his employer shall be liable in any manner for any personal injury or property damage or a loss of any kind arising from or connected with this inspection.

Inspector's Signature

Commissions 10655 W A, B, N, I
National Board, State, and Endorsements

Date 7-7-2005

WOT No. 01090165 07

FORM N-2 NPT CERTIFICATE HOLDERS' DATA REPORT FOR NUCLEAR PART AND APPURTENANCES*

As required by the Provision of the ASME Code Rules, Section III, Div. I

6/23/07 6/30/0

1. Manufactured & Certified by : General Electric Company Nuclear Fuel & Components Manufacturing (GE NF & CM)

   2117 Castle Hayne Road, Wilmington, North Carolina 28401

   (Name and Address of NPT Certificate Holder)

   (b) Manufactured for : WNP 2 Richland, Washington 99352

   (Name and Address of N Certificate Holder for completed nuclear component)

2. Identification - Certificate Holder's S/N of Part : A9454 Nat'l Bd. No. N/A

   (a) Constructed According to Drawing No: 919D258G003 Rev 19 Dwg. Prepared by D. L. Peterson

   (b) Description of Part Inspected: Cylinder Tube & Flange

   (c) Applicable ASME Code: Section III , Edition 1974 , Addenda Date W75 , Case No. 1361-2 Class 1

3. REMARKS: Standard part for use with Reactor. Hydrostatically tested at 1825 psi. min.

   (Brief description of service for which component was designed)

Sheet 1 of 2

We certify that the statements in this report are correct and this vessel part or appurtenance as defined in the code conforms to the rules of construction of the ASME Code Section III. (The applicable Designed Specification and Stress Report are not the responsibility of the NPT Certificate Holder for parts. An NPT Certification Holder for appurtenances is responsible for furnishing a separate Design Specification and Stress Report if the appurtenance is not included in the component Design Specification and Stress Report).

Date: 06/27/95 Signed GE - NEBG - NF & CM - QA By

(NPT Certificate Holder) (GE QA Representive)

Certificate of Authorization Expires: 6/16/96 Certification of Authorization No. : NPT N - 1151

Certification of Design for Appurtenance

Design information on file at GE Company, San Jose, California

Stress analysis report on file at GE Company, San Jose, California

DC22A6253 Rev. 1
Design specification certified by Blom Haaberg Prof. Eng. State Calif. Reg. No. 15570

DC22A6254 Rev 1
Stress analysis report certified by Edward Yoshio Prof. Eng. State Calif. Reg. No. M018646

Certification of Shop Inspection

I, the undersigned, holding a valid commission by the National Board of Boiler and Pressure Inspectors and/or the State or Province of North Carolina and employed by Department of Labor of State of North Carolina have inspected the part of a pressure vessel described in this Partial Data Report on 6/27, 1995, and state that to the best of my knowledge and belief, the NPT Certificate Holder has constructed this part in accordance with the ASME Code Section III.

By signing this certificate, neither the Inspector nor his employer makes any warranty, expressed or implied, concerning the part described in the Partial Data Report. Furthermore, neither the Inspector nor his employer shall be liable in any manner for any personal injury or property damages or a loss of any kind arising from or connected with this inspection.

6/27, 1995 Jerome P Emm NC 1231, Ohio, WC 3686 PA

Date Inspector's Signature National Board, State, Province And No.

*Supplemental sheets in form of lists, sketches or drawing may be used provided (1) size is 8-1/2" x 11", (2) information in 1-2 on this Data Report is included on each sheet, and (3) each sheet is numbered and number of sheets is recorded in Item 3. "REMARKS".

(07/90)

FORM N-2 (back)

Items 4-8 Incl. to be completed for single wall vessels, jackets vessels, or shells of heat exchangers.

4. Shell: Material _____ T.S. _____ Nominal Thickness ____ in. Corrosion Allowance ____ in. Dia. ____ ft. ____ in. Length ____ ft. ____ in.
(Kind & Spec. No.) (Min. of Range Specified)

5. Seams: Long _____ H.T.[1] _____ R.T. _____ Efficiency _____%
Girth _____ H.T.[1] _____ R.T. _____ No. of Courses _____

6. Heads: (a) Material _____ T.S. _____ (b) Material _____ T.S. _____

	Location (Top Bottom, Ends)	Thickness	Crown Radius	Knuckle Radius	Elliptical Ratio	Concial Apex Angle	Hemispherical Radius	Flat Diameter	Side to Press. (conv. or conc.)
(a)									
(b)									

If removable, bolts used _____ (Material, Spec. No., T.S. Size Number) Other fastening _____ (Describe or attach sketch)

7. Jacket Closure: _____
(Describe as ogee and weld, bar, etc. If bar give dimensions, if bolts, describe or sketch)

Drop Weight _____
Charpy Impact _____ ft-lb

8. Design pressure[2] 1250 psi at 575 °F at temp of _____ °F

Items 9 and 10 to be completed for tube sections

9. Tube Sheets: Stationary. Material _____ (Kind & Spec. No.) Dia. _____ (Subject to pressure) Thickness ____ in. Attachment _____ (Welded, Bolted)
Floating. Material _____ Dia. _____ Thickness ____ in. Attachment _____

10. Tubes: Material _____ O.D. _____ in. Thickness _____ Inches or gage. Number _____ Type _____ (Str. or U)

Items 11 - 14 incl. to be completed for inner chambers of jacketed vessels, or channels of heat exchangers.

11. Shell: Material _____ T.S. _____ Nominal Thickness ____ in. Corrosion Allowance ____ in. Dia. ____ ft. ____ in. Length ____ ft. ____ in.
(Kind & Spec. No.) (Min. of Range Specified)

12. Seams: Long _____ H.T.[1] _____ R.T. _____ Efficiency _____%
Girth _____ H.T.[1] _____ R.T. _____ No. of Courses _____

13. Heads: (a) Material _____ T.S. _____ (b) Material _____ T.S. _____

	Location	Thickness	Crown Radius	Knuckle Radius	Elliptical Ratio	Concial Apex Angle	Hemispherical Radius	Flat Diameter	Side to Press. (conv. or conc.)
(a)	Top, bottom, ends								
(b)	Channel								

If removable, bolts used (a)_____ (b)_____ (c)_____ Other fastening _____ (Describe or attach sketch)

Drop Weight _____
Charpy Impact _____ ft-lb

14. Design pressure[2] _____ psi at _____ °F at temp of _____ °F

Items below to be completed for all vessels where applicable.

15. Safety Valve Outlets: Number _____ Size _____ Location _____

16. Nozzles:

Purpose (Inlet, Outlet, Drain)	Number	Dia. or Size	Type	Material	Thickness	Reinforcement Material	How Attached

17. Inspection Openings: Manholes, No. _____ Size _____ Location _____
Handholes, No. _____ Size _____ Location _____
Threaded, No. _____ Size _____ Location _____

18. Supports: Skirt _____ (Yes or No) Lugs _____ (Number) Legs _____ (Number) Other _____ (Describe) Attached _____ (Where & How)

1 - If Postweld Heat-Treated.
2 - List other internal or external pressure with concident temperature when applicable.

WOT No. 01090165 07

FORM N-2 NPT CERTIFICATE HOLDERS' DATA REPORT FOR NUCLEA...ART AND APPURTENANCES*

As required by the Provision of the ASME Code Rules, Section III, Div. I

Ralph Swift 423101 6/30/0

1. Manufactured & Certified by : General Electric Company Nuclear Fuel & Components Manufacturing (GE NF & CM)

   2117 Castle Hayne Road, Wilmington, North Carolina 28401

   (Name and Address of NPT Certificate Holder)

   (b) Manufactured for : WNP 2 Richland, Washington 99352

   (Name and Address of N Certificate Holder for completed nuclear component)

2. Identification - Certificate Holder's S/N of Part : A9454 Nat'l Bd. No. N/A

   (a) Constructed According to Drawing No: 919D258G003 Rev 19 Dwg. Prepared by D. L. Peterson

   (b) Description of Part Inspected: Cylinder Tube & Flange

   (c) Applicable ASME Code: Section III , Edition 1974 , Addenda Date W'75 , Case No. 1361-2 Class 1

3. REMARKS: Standard part for use with Reactor. Hydrostatically tested at 1825 psi. min.

   (Brief description of service for which component was designed)

1. Cap 166B9274P001
   SA182 - F316
   3/8" thick x 1 1/16" OD

2. Indicator Tube 167B4908P001
   SA312 - TP316
   3/4" sch 40 - seamless pipe
   0.113" wall thickness
   1.065" max. dia.

3. Plug 159A1176P001
   SA182 - F304
   1/4" thick x 0.812" OD

4. Flange 919D610P001 (719E474)
   SA182 - F304
   3.37" thick x 9 5/8" OD

5. Head 129B3539P005
   SA182 - F304
   7/8" thick x 2.875" dia.

6. Ring Flange 114B5122P002
   SA182 - F304
   1" thick x 5.0" OD x 1.75" ID

7. Cap Screw 117C4516P002
   SA193 - B6
   6 ea. 1/2" dia. on 4 1/8" bolt circle

8. Plug 175A7961P001
   SA182 - F304
   0.38" thick x 1.307" dia.

9. Nut 114B5460P001
   XM - 19 SA479
   1.30" thick x 2.62" dia.

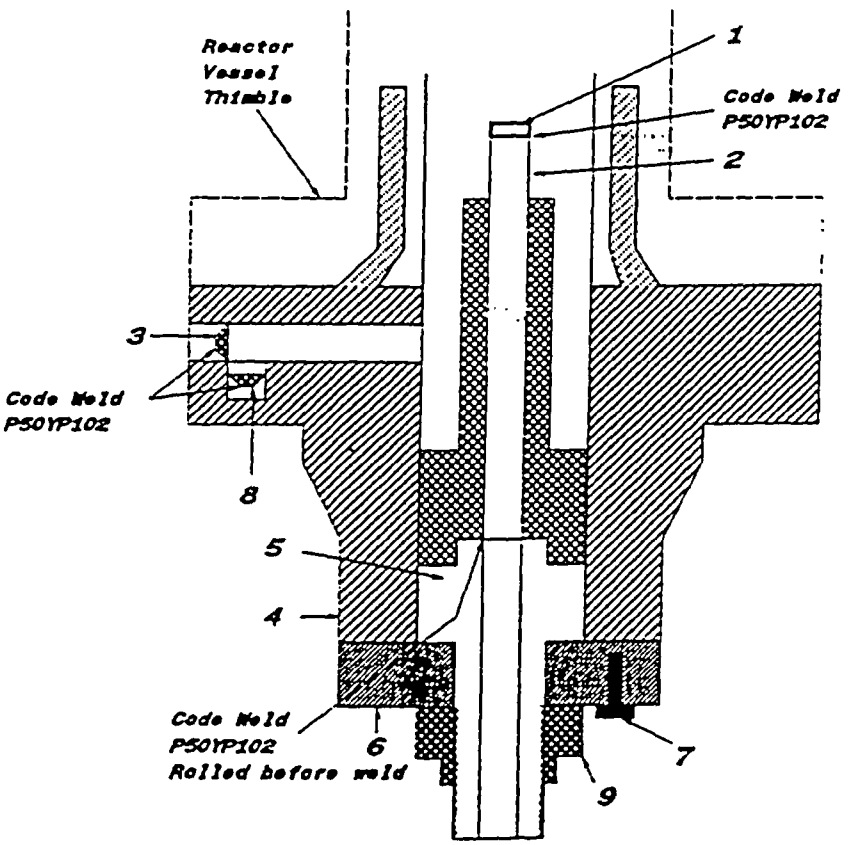

WOT No 01090165 08

ENERGY NORTHWEST
People·Vision·Solutions

FORM NIS-2 OWNER'S REPORT FOR REPAIRS OR REPLACEMENTS
As Required By The Provisions Of The ASME Code Section XI

Date: 06/29/05
Sheet: 1 Of 1
Unit: Not Applicable

1. **Owner:** Energy Northwest
   Address: Columbia Generating Station, North Power Plant Loop, Richland, Washington, 99352
2. **Plant:** Columbia Generating Station
   Address: Columbia Generating Station, North Power Plant Loop, Richland, Washington, 99352
3. (a) **Work Performed By:** Energy Northwest
   (b) **Repair Organization P.O. No, Job No, etc.:** Energy Northwest
   (c) **Type Code Symbol Stamp:** Not Applicable
   (d) **Certificate Of Authorization No.:** Not Applicable
   (e) **Expiration Date:** Not Applicable
4. **Identification Of System:** Control Rod Drive (CRD) System
5. (a) **Applicable Construction Code:** ASME Section III, Code Class 1, 1974 Edition with Winter 1975 Addenda, Code Case: 1361-2
   (b) **Applicable Edition Of ASME Section XI Utilized For Repairs Or Replacements:** 1989 Edition with no Addenda, Code Case: None
6. **Identification Of Components Repaired Or Replaced And Replacement Components**

Name Of Component	Name Of Manufacturer	Manufacturer's Serial No	National Board No	Other I.D.	Year Built	Repaired, Replaced Or Replacement	ASME Code Stamped (Yes Or No) Code Class
CRD	GE	5951	N/A	N/A	1974	Replaced	Yes, Code Class 1
CRD	GE	A9547	N/A	N/A	1995	Replacement	Yes, Code Class 1

7. **Description Of Work Performed:** Replaced Control Rod Drive (CRD) assembly at Core Location 58-39. The replacement work was performed in accordance with plant procedure PPM No 10.5.7 "Control Rod Drive Removal And Replacement" as follows:

1) Removed all eight (8) existing cap screws from the CRD assembly bolted flanged connection.
2) Removed existing CRD assembly, Serial No 5951.
3) Performed VT-1 visual examination on all eight (8) new replacement cap screws. VT-1 visual examination results acceptable.
4) Installed replacement CRD assembly, Serial No A9547.
5) Installed eight (8) VT-1 visually examined new replacement cap screws for the CRD assembly bolted flanged connection.
6) Torqued the cap screws for the CRD assembly bolted flanged connection to the required torque values.
7) Performed VT-2 visual examination during pressure test on CRD assembly bolted flanged connection to confirm pressure boundary integrity of the joint. No leakage was observed during pressure test.

NOTES -

1) The replacement CRD assembly, Serial No A9547 is certified to comply with ASME Section III, Code Class 1, 1974 Edition with Winter 1975 Addenda requirements.
2) New replacement cap screws, SA-540 Gr. B23, Class 4, Heat No 14813.
3) VT-1 visual examination Report No 2RPV-020 for the new replacement cap screws.

WOT No 01090165 08

ENERGY NORTHWEST
People·Vision·Solutions

FORM NIS-2 OWNER'S REPORT FOR REPAIRS OR REPLACEMENTS (Back)

8 Tests Conducted: Hydrostatic [ ] *Pneumatic* [ ] *Nominal Operating Pressure* [ ] *Other* [•]

Test Pressure: 1020 Psig *Test Temperature:* 170° F

Component Design Pressure: 1250 Psig *Temperature:* 575° F

9. Remarks: 1) See attached N-2 Code Data Report for the replacement CRD assembly, Serial No A9547.
2) * Pressure test on the CRD bolted flanged connection - Test pressure of 1020 Psig and test temperature of 170° F recorded during ASME Section XI pressure test in accordance with PPM No OSP-RPV-R801 "Reactor Pressure Vessel Leakage Test".

CERTIFICATE OF COMPLIANCE

We certify that the statements made in this Owner's Report are correct and this replacement *conforms to the rules of the ASME Code, Section XI.*
Type Code Symbol Stamp: Not Applicable
Certificate Of Authorization No.: Not Applicable
Expiration Date: Not Applicable

Prepared By Kuldip Singh - Program Lead Engineer (PLE) *Signed By* Kuldip Singh - Program Lead Engineer (PLE)

Date 6/30/05 *Date* 6/30/05

CERTIFICATE OF INSERVICE INSPECTION

I, the undersigned, holding a valid commission issued by the National Board of Boiler and Pressure Vessel Inspectors and the State of Washington *and employed by* Hartford Steam Boiler Of Connecticut of Hartford, Connecticut *have inspected the components described in this Owner's Report during the period* 5-6-2005 *to* 7-7-2005 *and state to the best of my knowledge and belief, the Owner has performed examinations and taken corrective measures described in this Owner's Report in accordance with the requirements of the ASME Code, Section XI.*
By signing this certificate neither the Inspector nor his employer makes any warranty, expressed or implied, concerning the examinations and corrective measures described in this Owner's Report. Furthermore, neither the Inspector nor his employer shall be liable in any manner for any personal injury or property damage or a loss of any kind arising from or connected with this inspection.

Inspector's Signature *Commissions* 10655W A, B, N, I
National Board, State, and Endorsements

Date 7-7-2005

WOT No. 01090165 08
6/30/05

FORM N-2 NPT CERTIFICATE HOLDERS' DATA REPORT FOR NUCLEAR PART AND APPURTENANCES*

As required by the Provision of the ASME Code Rules, Section III, Div. I

1. Manufactured & Certified by : General Electric Company Nuclear Fuel & Components Manufacturing (GE NF & CM)
   2117 Castle Hayne Road, Wilmington, North Carolina 28401
   (Name and Address of NPT Certificate Holder)

   (b) Manufactured for : WNP 2 Richland, Washington 99352
   (Name and Address of N Certificate Holder for completed nuclear component)

2. Identification - Certificate Holder's S/N of Part : A9547 Nat'l Bd. No. N/A

   (a) Constructed According to Drawing No: 919D258G003 Rev 18 Dwg. Prepared by D. L. Peterson

   (b) Description of Part Inspected: Cylinder Tube & Flange

   (c) Applicable ASME Code: Section III , Edition 1974 , Addenda Date W75 , Case No. 1361-2 Class 1

3. REMARKS: Standard part for use with Reactor. Hydrostatically tested at 1825 psi. min.
   (Brief description of service for which component was designed)

Sheet 1 of 2

We certify that the statements in this report are correct and this vessel part or appurtenance as defined in the code conforms to the rules of construction of the ASME Code Section III. (The applicable Designed Specification and Stress Report are not the responsibility of the NPT Certificate Holder for parts. An NPT Certification Holder for appurtenances is responsible for furnishing a separate Design Specification and Stress Report if the appurtenance is not included in the component Design Specification and Stress Report).

Date: 06/27/95 Signed GE - NEBG - NF & CM - QA By
(NPT Certificate Holder) (SC QA Representive)

Certificate of Authorization Expires: 6/16/96 Certification of Authorization No. : NPT N - 1151

Certification of Design for Appurtenance

Design information on file at GE Company, San Jose, California

Stress analysis report on file at GE Company, San Jose, California

DC22A6253 Rev. 1
Design specification certified by Bjorn Haaberg Prof. Eng. State Calif. Reg. No. 15570

DC22A6254 Rev 1
Stress analysis report certified by Edward Yoshio Prof. Eng. State Calif. Reg. No. M018646

Certification of Shop Inspection

I, the undersigned, holding a valid commission by the National Board of Boiler and Pressure Inspectors and/or the State or Province of North Carolina and employed by Department of Labor of State of North Carolina have inspected the part of a pressure vessel described in this Partial Data Report on 5/16, 1995, and state that to the best of my knowledge and belief, the NPT Certificate Holder has constructed this part in accordance with the ASME Code Section III.
By signing this certificate, neither the Inspector nor his employer makes any warranty, expressed or implied, concerning the part described in the Partial Data Report. Furthermore, neither the Inspector nor his employer shall be liable in any manner for any personal injury or property damages or a loss of any kind arising from or connected with this inspection.

6/27, 1995	Jerome P Every	NC 1231, Ohio, WC 3686 PA
Date	Inspector's Signature	National Board, State, Province And No.

*Supplemental sheets in form of lists, sketches or drawing may be used provided (1) size is 8-1/2" x 11", (2) information in 1-2 on this Data Report is included on each sheet, and (3) each sheet is numbered and number of sheets is recorded in Item 3. "REMARKS".

(07/90)

FORM N-2 (back)

Items 4-8 Incl. to be completed for single wall vessels, jackets vessels, or shells of heat exchangers.

4. Shell: Material _____ T.S. _____ Nominal Thickness ____ in. Corrosion Allowance ____ in. Dia. ____ ft. ____ in. Length ____ ft. ____ i
(Kind & Spec. No.) (Min. of Range Specified)

5. Seams: Long _____ H.T.[1] _____ R.T. _____ Efficiency _____%
Girth _____ H.T.[1] _____ R.T. _____ No. of Courses _____

6. Heads: (a) Material _____ T.S. _____ (b) Material _____ T.S. _____

	Location (Top Bottom, Ends)	Thickness	Crown Radius	Knuckle Radius	Elliptical Ratio	Concial Apex Angle	Hemispherical Radius	Flat Diameter	Side to Press. (conv. or conc.)
(a)									
(b)									

If removable, bolts used _____ (Material, Spec. No., T.S. Size Number) Other fastening _____ (Describe or attach sketch)

7. Jacket Closure: _____
(Describe as ogee and weld, bar, etc. If bar give dimensions, if bolts, describe or sketch)

Drop Weight _____
Charpy Impact _____ ft-lb

8. Design pressure[2] 1250 psi at 575 °F at temp of _____ °F

Items 9 and 10 to be completed for tube sections

9. Tube Sheets: Stationary. Material _____ (Kind & Spec. No.) Dia. _____ (Subject to pressure) Thickness ____ in. Attachment _____ (Welded, Bolted)
Floating. Material _____ Dia. _____ Thickness ____ in. Attachment _____

10. Tubes: Material _____ O.D. _____ in. Thickness _____ inches or gage. Number _____ Type _____ (Str. or U)

Items 11 - 14 incl. to be completed for inner chambers of jacketed vessels, or channels of heat exchangers.

11. Shell: Material _____ T.S. _____ Nominal Thickness ____ in. Corrosion Allowance ____ in. Dia. ____ ft. ____ in. Length ____ ft. ____ in
(Kind & Spec. No.) (Min. of Range Specified)

12. Seams: Long _____ H.T.[1] _____ R.T. _____ Efficiency _____%
Girth _____ H.T.[1] _____ R.T. _____ No. of Courses _____

13. Heads: (a) Material _____ T.S. _____ (b) Material _____ T.S. _____

Location	Thickness	Crown Radius	Knuckle Radius	Elliptical Ratio	Concial Apex Angle	Hemispherical Radius	Flat Diameter	Side to Press. (conv. or conc.)
(a) Top, bottom, ends								
(b) Channel								

If removable, bolts used (a)_____ (b)_____ (c)_____ Other fastening _____ (Describe or attach sketch)

Drop Weight _____
Charpy Impact _____ ft-lb

14. Design pressure[2] _____ psi at _____ °F at temp of _____ °F

Items below to be completed for all vessels where applicable.

15. Safety Valve Outlets: Number _____ Size _____ Location _____

16. Nozzles:

Purpose (Inlet, Outlet, Drain)	Number	Dia. or Size	Type	Material	Thickness	Reinforcement Material	How Attached

17. Inspection Openings: Manholes, No. _____ Size _____ Location _____
Handholes, No. _____ Size _____ Location _____
Threaded, No. _____ Size _____ Location _____

18. Supports: Skirt _____ (Yes or No) Lugs _____ (Number) Legs _____ (Number) Other _____ (Describe) Attached _____ (Where & How)

1 - If Postweld Heat-Treated.
2 - List other internal or external pressure with coincident temperature when applicable.

FORM N-2 NPT CERTIFICATE HOLDERS' DATA REPORT FOR NUCLEAR PART AND APPURTENANCES*
As required by the Provision of the ASME Code Rules, Section III, Div. I

WO7 No. 01090165 08

1. Manufactured & Certified by : General Electric Company Nuclear Fuel & Components Manufacturing (GE NF & CM)
2117 Castle Hayne Road, Wilmington, North Carolina 28401
(Name and Address of NPT Certificate Holder)

Philip Sims 6/30/05

(b) Manufactured for : WNP 2 Richland, Washington 99352
(Name and Address of N Certificate Holder for completed nuclear component)

2. Identification - Certificate Holder's S/N of Part : A9547 Nat'l Bd. No. N/A

(a) Constructed According to Drawing No: 919D258G003 Rev 18 Dwg. Prepared by D. L. Peterson

(b) Description of Part Inspected: Cylinder Tube & Flange

(c) Applicable ASME Code: Section III , Edition 1974 , Addenda Date W'75 , Case No. 1361-2 Class 1

3. REMARKS: Standard part for use with Reactor. Hydrostatically tested at 1825 psi. min.
(Brief description of service for which component was designed)

1. Cap 166B9274P001
SA182 - F316
3/8" thick x 1 1/16" OD

2. Indicator Tube 167B4908P001
SA312 - TP316
3/4" sch 40 - seamless pipe
0.113" wall thickness
1.065" max. dia.

3. Plug 159A1176P001
SA182 - F304
1/4" thick x 0.812" OD

4. Flange 919D610P001 (719E474)
SA182 - F304
3.37" thick x 9 5/8" OD

5. Head 129B3539P005
SA182 - F304
7/8" thick x 2.875" dia.

6. Ring Flange 114B5122P002
SA182 - F304
1" thick x 5.0" OD x 1.75" ID

7. Cap Screw 117C4516P002
SA193 - B6
6 ea. 1/2" dia. on 4 1/8" bolt circle

8. Plug 175A7961P001
SA182 - F304
0.38" thick x 1.307" dia.

9. Nut 114B5460P001
XM - 19 SA479
1.30" thick x 2.62" dia.

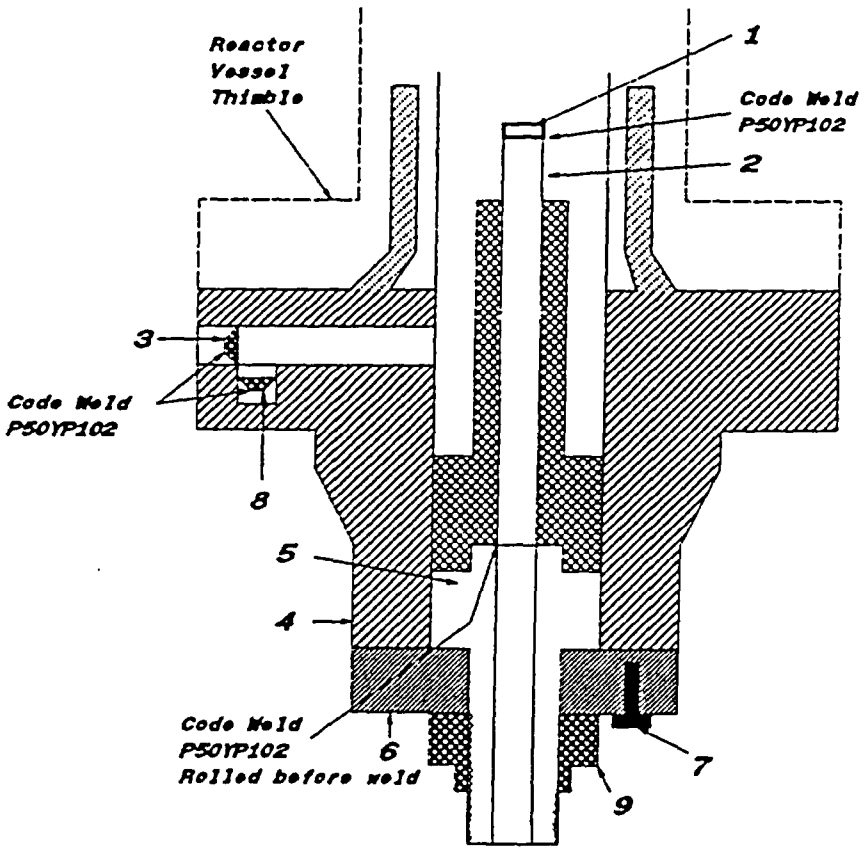

WOT No 01090165 09

ENERGY NORTHWEST
People·Vision·Solutions

FORM NIS-2 OWNER'S REPORT FOR REPAIRS OR REPLACEMENTS
As Required By The Provisions Of The ASME Code Section XI

1. Owner: Energy Northwest
Address: Columbia Generating Station, North Power Plant Loop, Richland, Washington, 99352
2. Plant: Columbia Generating Station
Address: Columbia Generating Station, North Power Plant Loop, Richland, Washington, 99352

Date: 06/29/05
Sheet: 1 Of 1
Unit: Not Applicable

3. (a) Work Performed By: Energy Northwest
(b) Repair Organization P.O. No, Job No, etc.: Energy Northwest
(c) Type Code Symbol Stamp: Not Applicable
(d) Certificate Of Authorization No.: Not Applicable
(e) Expiration Date: Not Applicable
4. Identification Of System: Control Rod Drive (CRD) System
5. (a) Applicable Construction Code: ASME Section III, Code Class 1, 1971 Edition with no Addenda, Code Case: 1361-1
(b) Applicable Edition Of ASME Section XI Utilized For Repairs Or Replacements: 1989 Edition with no Addenda, Code Case: None
6. Identification Of Components Repaired Or Replaced And Replacement Components

Name Of Component	Name Of Manufacturer	Manufacturer's Serial No	National Board No	Other I.D.	Year Built	Repaired, Replaced Or Replacement	ASME Code Stamped (Yes Or No) Code Class
CRD	GE	6431	N/A	N/A	1974	Replaced	Yes, Code Class 1
CRD	GE	6792	N/A	N/A	1975	Replacement	Yes, Code Class 1

7. Description Of Work Performed: Replaced Control Rod Drive (CRD) assembly at Core Location 34-31. The replacement work was performed in accordance with plant procedure PPM No 10.5.7 "Control Rod Drive Removal And Replacement" as follows:

1) Removed all eight (8) existing cap screws from the CRD assembly bolted flanged connection.
2) Removed existing CRD assembly, Serial No 6431.
3) Performed VT-1 visual examination on all eight (8) new replacement cap screws. VT-1 visual examination results acceptable.
4) Installed replacement CRD assembly, Serial No 6792.
5) Installed eight (8) VT-1 visually examined new replacement cap screws for the CRD assembly bolted flanged connection.
6) Torqued the cap screws for the CRD assembly bolted flanged connection to the required torque values.
7) Performed VT-2 visual examination during pressure test on CRD assembly bolted flanged connection to confirm pressure boundary integrity of the joint. No leakage was observed during pressure test.

NOTES -

1) The replacement CRD assembly, Serial No 6792 is certified to comply with ASME Section III, Code Class 1, 1971 Edition with no Addenda requirements.
2) New replacement cap screws, SA-540 Gr. B23, Class 4, Heat No 14813.
3) VT-1 visual examination Report No 2RPV-020 for the new replacement cap screws.

WOT No 01090165 09

ENERGY NORTHWEST
People·Vision·Solutions

FORM NIS-2 OWNER'S REPORT FOR REPAIRS OR REPLACEMENTS (Back)

8 Tests Conducted: Hydrostatic ☐ *Pneumatic* ☐ *Nominal Operating Pressure* ☐ *Other* ☐

Test Pressure: 1020 Psig *Test Temperature:* 170° F

Component Design Pressure: 1250 Psig *Temperature:* 575° F

9. Remarks: 1) See attached N-2 Code Data Report for the replacement CRD assembly, Serial No 6792.
2) * Pressure test on the CRD bolted flanged connection - Test pressure of 1020 Psig and test temperature of 170° F recorded during ASME Section XI pressure test in accordance with PPM No OSP-RPV-R801 "Reactor Pressure Vessel Leakage Test".

CERTIFICATE OF COMPLIANCE

We certify that the statements made in this Owner's Report are correct and this replacement *conforms to the rules of the ASME Code, Section XI.*
Type Code Symbol Stamp: Not Applicable
Certificate Of Authorization No.: Not Applicable
Expiration Date: Not Applicable

Prepared By Kuldip Singh - Program Lead Engineer (PLE) *Signed By* Kuldip Singh - Program Lead Engineer (PLE)

Date 6/30/05 *Date* 6/30/05

CERTIFICATE OF INSERVICE INSPECTION

I, the undersigned, holding a valid commission issued by the National Board of Boiler and Pressure Vessel Inspectors and the State of Washington *and employed by* Hartford Steam Boiler Of Connecticut of Hartford, Connecticut *have inspected the components described in this Owner's Report during the period* 5-6-2005 *to* 7-7-2005 *and state to the best of my knowledge and belief, the Owner has performed examinations and taken corrective measures described in this Owner's Report in accordance with the requirements of the ASME Code, Section XI.*
By signing this certificate neither the Inspector nor his employer makes any warranty, expressed or implied, concerning the examinations and corrective measures described in this Owner's Report. Furthermore, neither the Inspector nor his employer shall be liable in any manner for any personal injury or property damage or a loss of any kind arising from or connected with this inspection.

Inspector's Signature *Commissions* 10655W A, B, N, I
National Board, State, and Endorsements

Date 7-7-2005

WOT No. 01090165 09

FORM N-2 MANUFACTURERS DATA REPORT FOR NUCLEAR PART AND APPURTENANCES

As required by the Provisions of the ASME Code Rules

1. (a) Manufactured by General Electric Company, Castle Hayne Rd., Wilmington, N. C. 6/30/05
(Name and address of Manufacturer of part)

(b) Manufactured for General Electric Company, San Jose, California
(Name and address of Manufacturer of completed nuclear component)

2. Identification-Manufacturer's Serial No. of Part 6792 Nat'l Bd. No.

(a) Constructed According to Drawing No. 761E387G2 Drawing Prepared by D. L. Peterson

(b) Description of Part Inspected Control Rod Drive, Model #7RDB144 C1

(c) Applicable ASME Code: Section III, Edition 1971, Addenda date None, Case No. 1361-1 Class 1

3. Remarks: Standard part for use with Reactor. Hydrostatically tested at 1820 psi minimum.
(Brief description of service for which component was designed)

We certify that the statements made in this report are correct and this vessel part or appurtenance as defined in the Code conforms to the rules of construction of the ASME Code Section III.
(The applicable Design Specification and Stress Report are not the responsibility of the part Manufacturer. An appurtenance Manufacturer is responsible for furnishing a separate Design Specification and Stress Report if the appurtenance is not included in the component Design Specification and Stress Report.)

Date July 31 1975 Signed GE, BWRSD - REM (Manufacturer) By

Certificate of Authorization Expires June 20, 1978 Certificate of Authorization No. NPT - 462

CERTIFICATION OF DESIGN FOR APPURTENANCE (when applicable)

Design information on file at General Electric Co., BWRSD-REM, Castle Hayne Rd., Wilmington

Stress analysis report on file at General Electric Co., BWRSD-REM, Castle Hayne Rd., Wilmington

Design specifications certified by Vernon W. Pence Prof. Eng. State Calif. Reg. No. 14488

Stress analysis report certified by Vernon W. Pence Prof. Eng. State Calif. Reg. No. 14488

CERTIFICATE OF SHOP INSPECTION

I, the undersigned, holding a valid commission issued by the National Board of Boiler and Pressure Vessel Inspectors and/or the State or Province of North Carolina and employed by Department of Labor of State of North Carolina have inspected the part of a pressure vessel described in this Manufacturer's Partial Data Report on July 31 1975, and state that to the best of my knowledge and belief, the Manufacturer has constructed this part in accordance with the ASME Code Section III.

By signing this certificate, neither the Inspector nor his employer makes any warranty, expressed or implied, concerning the part described in this Manufacturer's Partial Data Report. Furthermore, neither the Inspector nor his employer shall be liable in any manner for any personal injury or property damage or a loss of any kind arising from or connected with this inspection.

Date July 31 1975

Inspector's Signature Commissions NC 723, PA. NC 1766, Ohio
National Board, State, Province and No.

ZX00366681

FORM N-2 (back)

Items 4–8 incl. to be completed for single wall vessels, jackets of jacketed vessels, or shells of heat exchangers.

4. Shell: Material ____ (Kind & Spec. No.) T.S. ____ (Min. of Range Specified) Nominal Thickness ____ in. Corrosion Allowance ____ in. Dia. ____ ft. ____ in. Length ____ ft. ____ in.

5. Seams: Long ____ H.T.[1] ____ R.T. ____ Efficiency ____ %

Girth ____ H.T.[1] ____ R.T. ____ No. of Courses ____

6. Heads: (a) Material ____ T.S. ____ (b) Material ____ T.S. ____

Location (Top, bottom, ends)	Thickness	Crown Radius	Knuckle Radius	Elliptical Ratio	Conical Apex Angle	Hemispherical Radius	Flat Diameter	Side to Press. (Conv. or Conc.)
(a)								
(b)								

If removable, bolts used ____ (Material, Spec. No., T.S., Size, Number) Other fastening ____ (Describe or attach sketch)

7. Jacket Closure: ____ (Describe as edge and weld, bar, etc. If bar give dimensions, if bolted, describe or sketch)

8. Design pressure[2] 1250 psi at 575 °F Drop Weight ____ Charpy Impact ____ ft-lb at temp. of ____ °F

Items 9 and 10 to be completed for tube sections

9. Tube Sheets: Stationary. Material ____ (Kind & Spec. No.) Dia. ____ (Subject to pressure) Thickness ____ in. Attachment ____ (Welded, Bolted)

Floating. Material ____ Dia. ____ Thickness ____ in. Attachment ____

10. Tubes: Material ____ O.D. ____ in. Thickness ____ inches or gage. Number ____ Type ____ (Str. or U)

Items 11–14 incl. to be completed for inner chambers of jacketed vessels, or channels of heat exchangers.

11. Shell: Material ____ (Kind & Spec. No.) T.S. ____ (Min. of Range Specified) Nominal Thickness ____ in. Corrosion Allowance ____ in. Dia. ____ ft. ____ in. Length ____ ft. ____ in.

12. Seams: Long ____ H.T.[1] ____ R.T. ____ Efficiency ____ %

Girth ____ H.T.[1] ____ R.T. ____ No. of Courses ____

13. Heads: (a) Material ____ T.S. ____ (b) Material ____ T.S. ____

Location	Thickness	Crown Radius	Knuckle Radius	Elliptical Ratio	Conical Apex Angle	Hemispherical Radius	Flat Diameter	Side to Press. (Conv. or Conc.)
(a) Top, bottom, ends								
(b) Channel								

If removable, bolts used (a) ____ (b) ____ (c) ____ Other fastening ____ (Describe or attach sketch)

14. Design pressure[2] ____ psi at ____ °F Drop Weight ____ Charpy Impact ____ ft-lb at temp. of ____ °F

Items below to be completed for all vessels where applicable.

15. Safety Valve Outlets: Number ____ Size ____ Location ____

16. Nozzles:

Purpose (Inlet, Outlet, Drain)	Number	Dia. or Size	Type	Material	Thickness	Reinforcement Material	How Attached

17. Inspection Openings: Manholes, No. ____ Size ____ Location ____
Handholes, No. ____ Size ____ Location ____
Threaded, No. ____ Size ____ Location ____

18. Supports: Skirt ____ (Yes or No) Lugs ____ (Number) Legs ____ (Number) Other ____ (Describe) Attached ____ (Where & How)

ZX00366682

[1] If Postweld Heat-Treated.
[2] List other internal or external pressure with coincident temperature when applicable.

WOT No 01090165 10

ENERGY NORTHWEST
People·Vision·Solutions

FORM NIS-2 OWNER'S REPORT FOR REPAIRS OR REPLACEMENTS
As Required By The Provisions Of The ASME Code Section XI

1. Owner: Energy Northwest
Address: Columbia Generating Station, North Power Plant Loop, Richland, Washington, 99352
2. Plant: Columbia Generating Station
Address: Columbia Generating Station, North Power Plant Loop, Richland, Washington, 99352

Date: 06/29/05
Sheet: 1 Of 1
Unit: Not Applicable

3. (a) Work Performed By: Energy Northwest
(b) Repair Organization P.O. No, Job No, etc.: Energy Northwest
(c) Type Code Symbol Stamp: Not Applicable
(d) Certificate Of Authorization No.: Not Applicable
(e) Expiration Date: Not Applicable
4. Identification Of System: Control Rod Drive (CRD) System
5. (a) Applicable Construction Code: ASME Section III, Code Class 1, 1974 Edition with Winter 1975 Addenda, Code Case: 1361-2
(b) Applicable Edition Of ASME Section XI Utilized For Repairs Or Replacements: 1989 Edition with no Addenda, Code Case: None
6. Identification Of Components Repaired Or Replaced And Replacement Components

Name Of Component	Name Of Manufacturer	Manufacturer's Serial No	National Board No	Other I.D.	Year Built	Repaired, Replaced Or Replacement	ASME Code Stamped (Yes Or No) Code Class
CRD	GE	6339	N/A	N/A	1974	Replaced	Yes, Code Class 1
CRD	GE	A9293	N/A	N/A	1995	Replacement	Yes, Code Class 1

7. Description Of Work Performed: Replaced Control Rod Drive (CRD) assembly at Core Location 02-31. The replacement work was performed in accordance with plant procedure PPM No 10.5.7 "Control Rod Drive Removal And Replacement" as follows:

1) Removed all eight (8) existing cap screws from the CRD assembly bolted flanged connection.
2) Removed existing CRD assembly, Serial No 6339.
3) Performed VT-1 visual examination on all eight (8) new replacement cap screws. VT-1 visual examination results acceptable.
4) Installed replacement CRD assembly, Serial No A9293.
5) Installed eight (8) VT-1 visually examined new replacement cap screws for the CRD assembly bolted flanged connection.
6) Torqued the cap screws for the CRD assembly bolted flanged connection to the required torque values.
7) Performed VT-2 visual examination during pressure test on CRD assembly bolted flanged connection to confirm pressure boundary integrity of the joint. No leakage was observed during pressure test.

NOTES -

1) The replacement CRD assembly, Serial No A9293 is certified to comply with ASME Section III, Code Class 1, 1974 Edition with Winter 1975 Addenda requirements.
2) New replacement cap screws, SA-540 Gr. B23, Class 4, Heat No 14813.
3) VT-1 visual examination Report No 2RPV-020 for the new replacement cap screws.

WOT No 01090165 10

ENERGY NORTHWEST
People · Vision · Solutions

FORM NIS-2 OWNER'S REPORT FOR REPAIRS OR REPLACEMENTS (Back)

8 Tests Conducted: Hydrostatic ☐ *Pneumatic* ☐ *Nominal Operating Pressure* ☐ *Other* ☐ *

Test Pressure: 1020 Psig *Test Temperature:* 170° F

Component Design Pressure: 1250 Psig *Temperature:* 575° F

9. Remarks: 1) See attached N-2 Code Data Report for the replacement CRD assembly, Serial No A9293.
2) * Pressure test on the CRD bolted flanged connection - Test pressure of 1020 Psig and test temperature of 170° F recorded during ASME Section XI pressure test in accordance with PPM No OSP-RPV-R801 "Reactor Pressure Vessel Leakage Test".

CERTIFICATE OF COMPLIANCE

We certify that the statements made in this Owner's Report are correct and this replacement *conforms to the rules of the ASME Code, Section XI.*
Type Code Symbol Stamp: Not Applicable
Certificate Of Authorization No.: Not Applicable
Expiration Date: Not Applicable

Prepared By Kuldip Singh - Program Lead Engineer (PLE) *Signed By* Kuldip Singh - Program Lead Engineer (PLE)

Date 6/30/05 *Date* 6/30/05

CERTIFICATE OF INSERVICE INSPECTION

I, the undersigned, holding a valid commission issued by the National Board of Boiler and Pressure Vessel Inspectors and the State of Washington *and employed by* Hartford Steam Boiler Of Connecticut of Hartford, Connecticut *have inspected the components described in this Owner's Report during the period* 5-6-2005 *to* 7-7-2005 *and state to the best of my knowledge and belief, the Owner has performed examinations and taken corrective measures described in this Owner's Report in accordance with the requirements of the ASME Code, Section XI.*
By signing this certificate neither the Inspector nor his employer makes any warranty, expressed or implied, concerning the examinations and corrective measures described in this Owner's Report. Furthermore, neither the Inspector nor his employer shall be liable in any manner for any personal injury or property damage or a loss of any kind arising from or connected with this inspection.

Inspector's Signature *Commissions* 10655W A, B, N, I
National Board, State, and Endorsements

Date 7-7-2005

WOT No. 01090165 10

FORM N-2 NPT CERTIFICATE HOLDERS' DATA REPORT FOR NUCLEAR PART AND APPURTENANCES*

As required by the Provision of the ASME Code Rules, Section III, Div. I.

Rudolph Eugh 6/23/01 6/30/05

1. Manufactured & Certified by : General Electric Company Nuclear Fuel & Components Manufacturing (GE NF & CM)

   2117 Castle Hayne Road, Wilmington, North Carolina 28401

   (Name and Address of NPT Certificate Holder)

   (b) Manufactured for : WNP 2 Richland, Washington 99352

   (Name and Address of N Certificate Holder for completed nuclear component)

2. Identification - Certificate Holder's S/N of Part : A9293 Nat'l Bd. No. N/A

   (a) Constructed According to Drawing No: 919D258G003 Rev 19 Dwg. Prepared by D. L. Peterson

   (b) Description of Part Inspected: Cylinder Tube & Flange

   (c) Applicable ASME Code: Section III , Edition 1974 , Addenda Date W75 , Case No. 1361-2 Class 1

3. REMARKS: Standard part for use with Reactor. Hydrostatically tested at 1825 psi. min.

   (Brief description of service for which component was designed)

Sheet 1 of 2

We certify that the statements in this report are correct and this vessel part or appurtenance as defined in the code conforms to the rules of construction of the ASME Code Section III. (The applicable Designed Specification and Stress Report are not the responsibility of the NPT Certificate Holder for parts. An NPT Certification Holder for appurtenances is responsible for furnishing a separate Design Specification and Stress Report if the appurtenance is not included in the component Design Specification and Stress Report).

Date: 06/27/95 Signed GE - NEBG - NF & CM - QA By [signature]

(NPT Certificate Holder) (GE QA Representive)

Certificate of Authorization Expires: 6/16/96 Certification of Authorization No. : NPT N - 1151

Certification of Design for Appurtenance

Design information on file at GE Company, San Jose, California

Stress analysis report on file at GE Company, San Jose, California

DC22A6253 Rev. 1
Design specification certified by Blom Haaberg Prof. Eng. State Calif. Reg. No. 15570

DC22A6254 Rev 1
Stress analysis report certified by Edward Yoshio Prof. Eng. State Calif. Reg. No. M018646

Certification of Shop Inspection

I, the undersigned, holding a valid commission by the National Board of Boiler and Pressure Inspectors and/or the State or Province of North Carolina and employed by Department of Labor of State of North Carolina have inspected the part of a pressure vessel described in this Partial Data Report on 6/27, 1995, and state that to the best of my knowledge and belief, the NPT Certificate Holder has constructed this part in accordance with the ASME Code Section III.

By signing this certificate, neither the Inspector nor his employer makes any warranty, expressed or implied, concerning the part described in the Partial Data Report. Furthermore, neither the Inspector nor his employer shall be liable in any manner for any personal injury or property damages or a loss of any kind arising from or connected with this inspection.

6/27, 1995 [signature] NC 1231, Ohio, WC 3686 PA

Date Inspector's Signature National Board, State, Province And No.

*Supplemental sheets in form of lists, sketches or drawing may be used provided (1) size is 8-1/2" x 11", (2) information in 1-2 on this Data Report is included on each sheet, and (3) each sheet is numbered and number of sheets is recorded in Item 3. "REMARKS".

(07/90)

FORM N-2 (back)

Items 4-8 Incl. to be completed for single wall vessels, jackets vessels, or shells of heat exchangers.

4. Shell: Material _____ T.S. _____ Nominal Thickness ___ in. Corrosion Allowance ___ in. Dia. ___ ft. ___ in. Length ___ ft. ___ in.
(Kind & Spec. No.) (Min. of Range Specified)

5. Seams: Long _____ H.T.[1] _____ R.T. _____ Efficiency _____%
Girth _____ H.T.[1] _____ R.T. _____ No. of Courses _____

6. Heads: (a) Material _____ T.S. _____ (b) Material _____ T.S. _____

	Location (Top Bottom, Ends)	Thickness	Crown Radius	Knuckle Radius	Elliptical Ratio	Concial Apex Angle	Hemispherical Radius	Flat Diameter	Side to Press. (conv. or conc.)
(a)									
(b)									

If removable, bolts used _____ (Material, Spec. No., T.S. Size Number) Other fastening _____ (Describe or attach sketch)

7. Jacket Closure: _____
(Describe as ogee and weld, bar, etc. If bar give dimensions, if bolts, describe or sketch)

Drop Weight _____
Charpy Impact _____ ft-lb

8. Design pressure[2] 1250 psi at 575 °F at temp of _____ °F

Items 9 and 10 to be completed for tube sections

9. Tube Sheets: Stationary. Material _____ (Kind & Spec. No.) Dia. _____ (Subject to pressure) Thickness ___ in. Attachment _____ (Welded, Bolted)
Floating. Material _____ Dia. _____ Thickness ___ in. Attachment _____

10. Tubes: Material _____ O.D. _____ in. Thickness _____ inches or gage. Number _____ Type _____ (Str. or U)

Items 11 - 14 incl. to be completed for inner chambers of jacketed vessels, or channels of heat exchangers.

11. Shell: Material _____ T.S. _____ Nominal Thickness ___ in. Corrosion Allowance ___ in. Dia. ___ ft. ___ in. Length ___ ft. ___ in.
(Kind & Spec. No.) (Min. of Range Specified)

12. Seams: Long _____ H.T.[1] _____ R.T. _____ Efficiency _____%
Girth _____ H.T.[1] _____ R.T. _____ No. of Courses _____

13. Heads: (a) Material _____ T.S. _____ (b) Material _____ T.S. _____

	Location	Thickness	Crown Radius	Knuckle Radius	Elliptical Ratio	Concial Apex Angle	Hemispherical Radius	Flat Diameter	Side to Press. (conv. or conc.)
(a)	Top, bottom, ends								
(b)	Channel								

If removable, bolts used (a)_____ (b)_____ (c)_____ Other fastening _____ (Describe or attach sketch)

Drop Weight _____
Charpy Impact _____ ft-lb

14. Design pressure[2] _____ psi at _____ °F at temp of _____ °F

Items below to be completed for all vessels where applicable.

15. Safety Valve Outlets: Number _____ Size _____ Location _____

16. Nozzles:

Purpose (Inlet, Outlet, Drain)	Number	Dia. or Size	Type	Material	Thickness	Reinforcement Material	How Attached

17. Inspection Openings: Manholes, No. _____ Size _____ Location _____
Handholes, No. _____ Size _____ Location _____
Threaded, No. _____ Size _____ Location _____

18. Supports: Skirt _____ (Yes or No) Lugs _____ (Number) Legs _____ (Number) Other _____ (Describe) Attached _____ (Where & How)

1 - If Postweld Heat-Treated.
2 - List other internal or external pressure with coincident temperature when applicable.

PEA WOT No. 01090165 10

FORM N-2 NPT CERTIFICATE HOLDERS' DATA REPORT FOR NUCLEAR PART AND APPURTENANCES*

As required by the Provision of the ASME Code Rules, Section III, Div. I

Kulwip Singh 6/30/05

1. Manufactured & Certified by : General Electric Company Nuclear Fuel & Components Manufacturing (GE NF & CM)

   2117 Castle Hayne Road, Wilmington, North Carolina 28401

   (Name and Address of NPT Certificate Holder)

   (b) Manufactured for : WNP 2 Richland, Washington 99352

   (Name and Address of N Certificate Holder for completed nuclear component)

2. Identification - Certificate Holder's S/N of Part : A9293 Nat'l Bd. No. N/A

   (a) Constructed According to Drawing No: 919D258G003 Rev 19 Dwg. Prepared by D. L. Peterson

   (b) Description of Part Inspected: Cylinder Tube & Flange

   (c) Applicable ASME Code: Section III , Edition 1974 , Addenda Date W'75 , Case No. 1361-2 Class 1

3. REMARKS: Standard part for use with Reactor. Hydrostatically tested at 1825 psi. min.

   (Brief description of service for which component was designed)

1. Cap 166B9274P001
   SA182 - F316
   3/8" thick x 1 1/16" OD

2. Indicator Tube 167B4908P001
   SA312 - TP316
   3/4" sch 40 - seamless pipe
   0.113" wall thickness
   1.065" max. dia.

3. Plug 159A1176P001
   SA182 - F304
   1/4" thick x 0.812" OD

4. Flange 919D610P001 (719E474)
   SA182 - F304
   3.37" thick x 9 5/8" OD

5. Head 129B3539P005
   SA182 - F304
   7/8" thick x 2.875" dia.

6. Ring Flange 114B5122P002
   SA182 - F304
   1" thick x 5.0" OD x 1.75" ID

7. Cap Screw 117C4516P002
   SA193 - B6
   6 ea. 1/2" dia. on 4 1/8" bolt circle

8. Plug 175A7961P001
   SA182 - F304
   0.38" thick x 1.307" dia.

9. Nut 114B5460P001
   XM - 19 SA479
   1.30" thick x 2.62" dia.

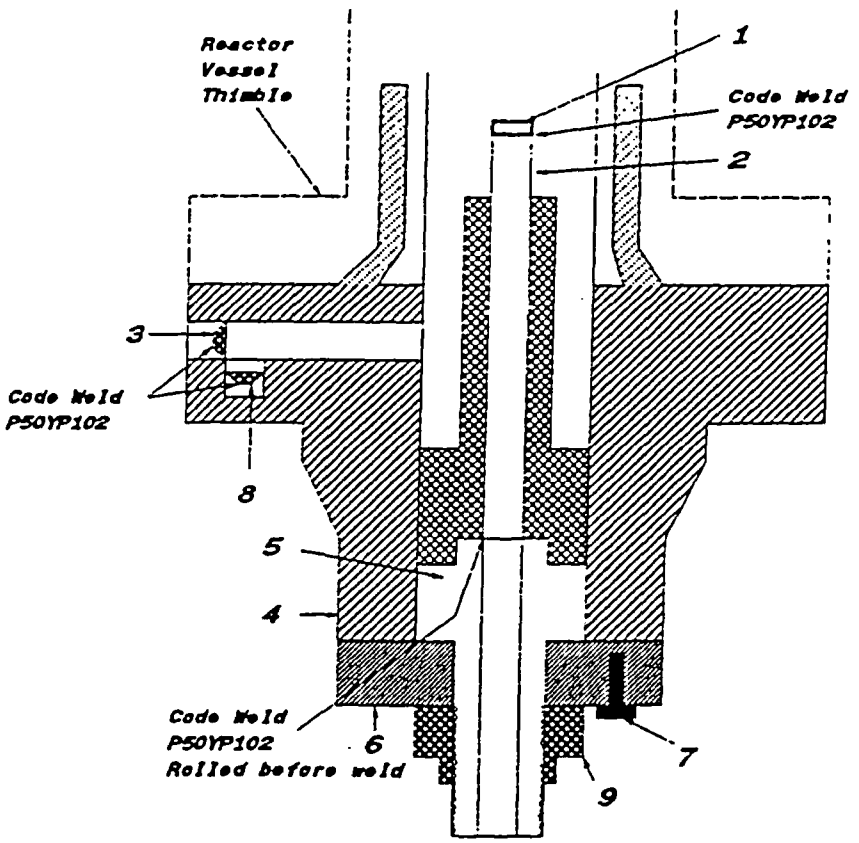

WOT No 01090165 11

ENERGY NORTHWEST
People·Vision·Solutions

FORM NIS-2 OWNER'S REPORT FOR REPAIRS OR REPLACEMENTS
As Required By The Provisions Of The ASME Code Section XI

Date: 07/11/05
Sheet: 1 Of 1
Unit: Not Applicable

1. **Owner:** Energy Northwest
   Address: Columbia Generating Station, North Power Plant Loop, Richland, Washington, 99352
2. **Plant:** Columbia Generating Station
   Address: Columbia Generating Station, North Power Plant Loop, Richland, Washington, 99352
3. (a) **Work Performed By:** Energy Northwest
   (b) **Repair Organization P.O. No, Job No, etc.:** Energy Northwest
   (c) **Type Code Symbol Stamp:** Not Applicable
   (d) **Certificate Of Authorization No.:** Not Applicable
   (e) **Expiration Date:** Not Applicable
4. **Identification Of System:** Control Rod Drive (CRD) System
5. (a) **Applicable Construction Code:** ASME Section III, Code Class 1, 1974 Edition with Winter 1975 Addenda, Code Case: 1361-2
   (b) **Applicable Edition Of ASME Section XI Utilized For Repairs Or Replacements:** 1989 Edition with no Addenda, Code Case: None
6. **Identification Of Components Repaired Or Replaced And Replacement Components**

Name Of Component	Name Of Manufacturer	Manufacturer's Serial No	National Board No	Other I.D.	Year Built	Repaired, Replaced Or Replacement	ASME Code Stamped (Yes Or No) Code Class
CRD	GE	A8738	N/A	N/A	1988	Replaced	Yes, Code Class 1
CRD	GE	A9421	N/A	N/A	1995	Replacement	Yes, Code Class 1

7. **Description Of Work Performed:** Replaced Control Rod Drive (CRD) assembly at Core Location 02-39. The replacement work was performed in accordance with plant procedure PPM No 10.5.7 "Control Rod Drive Removal And Replacement" as follows:

1) Removed all eight (8) existing cap screws from the CRD assembly bolted flanged connection.
2) Removed existing CRD assembly, Serial No A8738.
3) Performed VT-1 visual examination on all eight (8) new replacement cap screws. VT-1 visual examination results acceptable.
4) Installed replacement CRD assembly, Serial No A9421.
5) Installed eight (8) VT-1 visually examined new replacement cap screws for the CRD assembly bolted flanged connection.
6) Torqued the cap screws for the CRD assembly bolted flanged connection to the required torque values.
7) Performed VT-2 visual examination during pressure test on CRD assembly bolted flanged connection to confirm pressure boundary integrity of the joint. No leakage was observed during pressure test.

NOTES -

1) The replacement CRD assembly, Serial No A9421 is certified to comply with ASME Section III, Code Class 1, 1974 Edition with Winter 1975 Addenda requirements.
2) New replacement cap screws, SA-540 Gr. B23, Class 4, Heat No 14813.
3) VT-1 visual examination Report No 2RPV-020 for the new replacement cap screws.

WOT No 01090165 11

ENERGY NORTHWEST
People·Vision·Solutions

FORM NIS-2 OWNER'S REPORT FOR REPAIRS OR REPLACEMENTS (Back)

8 Tests Conducted: Hydrostatic [ ] *Pneumatic* [ ] *Nominal Operating Pressure* [ ] *Other* [•]

Test Pressure: 1020 Psig *Test Temperature:* 170° F

Component Design Pressure: 1250 Psig *Temperature:* 575° F

9. Remarks (Applicable Manufacturer's Data Reports to be attached): 1) See attached N-2 Code Data Report for the replacement CRD assembly, Serial No A9421. 2) * Pressure test on the CRD bolted flanged connection - Test pressure of 1020 Psig and test temperature of 170° F recorded during ASME Section XI pressure test in accordance with PPM No OSP-RPV-R801 "Reactor Pressure Vessel Leakage Test".

CERTIFICATE OF COMPLIANCE

We certify that the statements made in this Owner's Report are correct and this replacement *conforms to the rules of the ASME Code, Section XI.*

Type Code Symbol Stamp: Not Applicable

Certificate Of Authorization No.: Not Applicable

Expiration Date: Not Applicable

Prepared By Kuldip Singh - Program Lead Engineer (PLE) *Signed By* Kuldip Singh - Program Lead Engineer (PLE)

Date 7/11/05 *Date* 7/11/05

CERTIFICATE OF INSERVICE INSPECTION

I, the undersigned, holding a valid commission issued by the National Board of Boiler and Pressure Vessel Inspectors and the State of Washington *and employed by* Hartford Steam Boiler Of Connecticut of Hartford, Connecticut *have inspected the components described in this Owner's Report during the period* 5-6-2005 *to* 7-11-2005 *and state to the best of my knowledge and belief, the Owner has performed examinations and taken corrective measures described in this Owner's Report in accordance with the requirements of the ASME Code, Section XI.*

By signing this certificate neither the Inspector nor his employer makes any warranty, expressed or implied, concerning the examinations and corrective measures described in this Owner's Report. Furthermore, neither the Inspector nor his employer shall be liable in any manner for any personal injury or property damage or a loss of any kind arising from or connected with this inspection.

Inspector's Signature *Commissions* 10655 W A, B, N, I
National Board, State, and Endorsements

Date _____

WOT No. 01090165 11

FORM N-2 NPT CERTIFICATE HOLDERS' DATA REPORT FOR NUCLEAR PART AND APPURTENANCES*

As required by the Provision of the ASME Code Rules, Section III, Div. I

6/30/95

1. Manufactured & Certified by : General Electric Company Nuclear Fuel & Components Manufacturing (GE NF & CM)

   2117 Castle Hayne Road, Wilmington, North Carolina 28401

   (Name and Address of NPT Certificate Holder)

   (b) Manufactured for : WNP 2 Richland, Washington 99352

   (Name and Address of N Certificate Holder for completed nuclear component)

2. Identification - Certificate Holder's S/N of Part : A9421 Nat'l Bd. No. N/A

   (a) Constructed According to Drawing No: 919D258G003 Rev 18 Dwg. Prepared by D. L. Peterson

   (b) Description of Part Inspected: Cylinder Tube & Flange

   (c) Applicable ASME Code: Section III , Edition 1974 , Addenda Date W'75 , Case No. 1361-2 Class 1

3. REMARKS: Standard part for use with Reactor. Hydrostatically tested at 1825 psi. min.

   (Brief description of service for which component was designed)

Sheet 1 of 2

We certify that the statements in this report are correct and this vessel part or appurtenance as defined in the code conforms to the rules of construction of the ASME Code Section III. (The applicable Designed Specification and Stress Report are not the responsibility of the NPT Certificate Holder for parts. An NPT Certification Holder for appurtenances is responsible for furnishing a separate Design Specification and Stress Report if the appurtenance is not included in the component Design Specification and Stress Report).

Date: 06/27/95 Signed GE - NEBG - NF & CM - QA By

(NPT Certificate Holder) (SC QA Representive)

Certificate of Authorization Expires: 6/16/96 Certification of Authorization No. : NPT N - 1151

Certification of Design for Appurtenance

Design information on file at GE Company, San Jose, California

Stress analysis report on file at GE Company, San Jose, California

DC22A6253 Rev. 1
Design specification certified by Bjorn Haaberg Prof. Eng. State Calif. Reg. No. 15570

DC22A6254 Rev 1
Stress analysis report certified by Edward Yoshio Prof. Eng. State Calif. Reg. No. M018646

Certification of Shop Inspection

I, the undersigned, holding a valid commission by the National Board of Boiler and Pressure Inspectors and/or the State or Province of North Carolina and employed by Department of Labor of State of North Carolina have inspected the part of a pressure vessel described in this Partial Data Report on 6/16, 1995, and state that to the best of my knowledge and belief, the NPT Certificate Holder has constructed this part in accordance with the ASME Code Section III.
By signing this certificate, neither the Inspector nor his employer makes any warranty, expressed or implied, concerning the part described in the Partial Data Report. Furthermore, neither the Inspector nor his employer shall be liable in any manner for any personal injury or property damages or a loss of any kind arising from or connected with this inspection.

6/27, 1995 Jerome P Ennen NC 1231, Ohio, WC 3686 PA

Date Inspector's Signature National Board, State, Province And No.

*Supplemental sheets in form of lists, sketches or drawing may be used provided (1) size is 8-1/2" x 11", (2) information in 1-2 on this Data Report is included on each sheet, and (3) each sheet is numbered and number of sheets is recorded in Item 3. "REMARKS".

(07/90)

FORM N-2 (back)

Items 4-8 Incl. to be completed for single wall vessels, jackets vessels, or shells of heat exchangers.

4. Shell: Material _____ T.S. _____ Nominal Thickness ___ in. Corrosion Allowance ___ in. Dia. ___ ft. ___ in. Length ___ ft. ___ in.
(Kind & Spec. No.) (Min. of Range Specified)

5. Seams: Long _____ H.T.[1] _____ R.T. _____ Efficiency _____%
Girth _____ H.T.[1] _____ R.T. _____ No. of Courses _____

6. Heads: (a) Material _____ T.S. _____ (b) Material _____ T.S. _____

	Location (Top Bottom, Ends)	Thickness	Crown Radius	Knuckle Radius	Elliptical Ratio	Concial Apex Angle	Hemispherical Radius	Flat Diameter	Side to Press. (conv. or conc.)
(a)									
(b)									

If removable, bolts used _____ (Material, Spec. No., T.S. Size Number) Other fastening _____ (Describe or attach sketch)

7. Jacket Closure: _____
(Describe as ogee and weld, bar, etc. If bar give dimensions, if bolts, describe or sketch)

Drop Weight _____
Charpy Impact _____ ft-lb

8. Design pressure[2] 1250 psi at 575 °F at temp of _____ °F

Items 9 and 10 to be completed for tube sections

9. Tube Sheets: Stationary. Material _____ (Kind & Spec. No.) Dia. _____ (Subject to pressure) Thickness ___ in. Attachment _____ (Welded, Bolted)
Floating. Material _____ Dia. _____ Thickness ___ in. Attachment _____

10. Tubes: Material _____ O.D. _____ in. Thickness _____ inches or gage. Number _____ Type _____ (Str. or U)

Items 11 - 14 incl. to be completed for inner chambers of jacketed vessels, or channels of heat exchangers.

11. Shell: Material _____ T.S. _____ Nominal Thickness ___ in. Corrosion Allowance ___ in. Dia. ___ ft. ___ in. Length ___ ft. ___ in.
(Kind & Spec. No.) (Min. of Range Specified)

12. Seams: Long _____ H.T.[1] _____ R.T. _____ Efficiency _____%
Girth _____ H.T.[1] _____ R.T. _____ No. of Courses _____

13. Heads: (a) Material _____ T.S. _____ (b) Material _____ T.S. _____

	Location	Thickness	Crown Radius	Knuckle Radius	Elliptical Ratio	Concial Apex Angle	Hemispherical Radius	Flat Diameter	Side to Press. (conv. or conc.)
(a)	Top, bottom, ends								
(b)	Channel								

If removable, bolts used (a)_____ (b)_____ (c)_____ Other fastening _____ (Describe or attach sketch)

Drop Weight _____
Charpy Impact _____ ft-lb

14. Design pressure[2] _____ psi at _____ °F at temp of _____ °F

Items below to be completed for all vessels where applicable.

15. Safety Valve Outlets: Number _____ Size _____ Location _____

16. Nozzles:

Purpose (Inlet, Outlet, Drain)	Number	Dia. or Size	Type	Material	Thickness	Reinforcement Material	How Attached

17. Inspection Openings: Manholes, No. _____ Size _____ Location _____
Handholes, No. _____ Size _____ Location _____
Threaded, No. _____ Size _____ Location _____

18. Supports: Skirt _____ (Yes or No) Lugs _____ (Number) Legs _____ (Number) Other _____ (Describe) Attached _____ (Where & How)

1 - If Postweld Heat-Treated.
2 - List other internal or external pressure with coincident temperature when applicable.

W07, No. 01090165 11

FORM N-2 NPT CERTIFICATE HOLDERS' DATA REPORT FOR NUCLEAR PARTS AND APPURTENANCES*
As required by the Provision of the ASME Code Rules, Section III, Div. 1

6/30/05

1. Manufactured & Certified by : General Electric Company Nuclear Fuel & Components Manufacturing (GE NF & CM)
2117 Castle Hayne Road, Wilmington, North Carolina 28401
(Name and Address of NPT Certificate Holder)

(b) Manufactured for : WNP 2 Richland, Washington 99352
(Name and Address of N Certificate Holder for completed nuclear component)

2. Identification - Certificate Holder's S/N of Part : A9421 Nat'l Bd. No. N/A

(a) Constructed According to Drawing No: 919D258G003 Rev 18 Dwg. Prepared by D. L. Peterson

(b) Description of Part Inspected: Cylinder Tube & Flange

(c) Applicable ASME Code: Section III , Edition 1974 , Addenda Date W'75 , Case No. 1361-2 Class 1

3. REMARKS: Standard part for use with Reactor. Hydrostatically tested at 1825 psi. min.
(Brief description of service for which component was designed)

Sheet 2 of 2

1. Cap 166B9274P001
SA182 - F316
3/8" thick x 1 1/16" OD

2. Indicator Tube 167B4908P001
SA312 - TP316
3/4" sch 40 - seamless pipe
0.113" wall thickness
1.065" max. dia.

3. Plug 159A1176P001
SA182 - F304
1/4" thick x 0.812" OD

4. Flange 919D610P001 (719E474)
SA182 - F304
3.37" thick x 9 5/8" OD

5. Head 129B3539P005
SA182 - F304
7/8" thick x 2.875" dia.

6. Ring Flange 114B5122P002
SA182 - F304
1" thick x 5.0" OD x 1.75" ID

7. Cap Screw 117C4516P002
SA193 - B6
6 ea. 1/2" dia. on 4 1/8" bolt circle

8. Plug 175A7961P001
SA182 - F304
0.38" thick x 1.307" dia.

9. Nut 114B5460P001
XM - 19 SA479
1.30" thick x 2.62" dia.

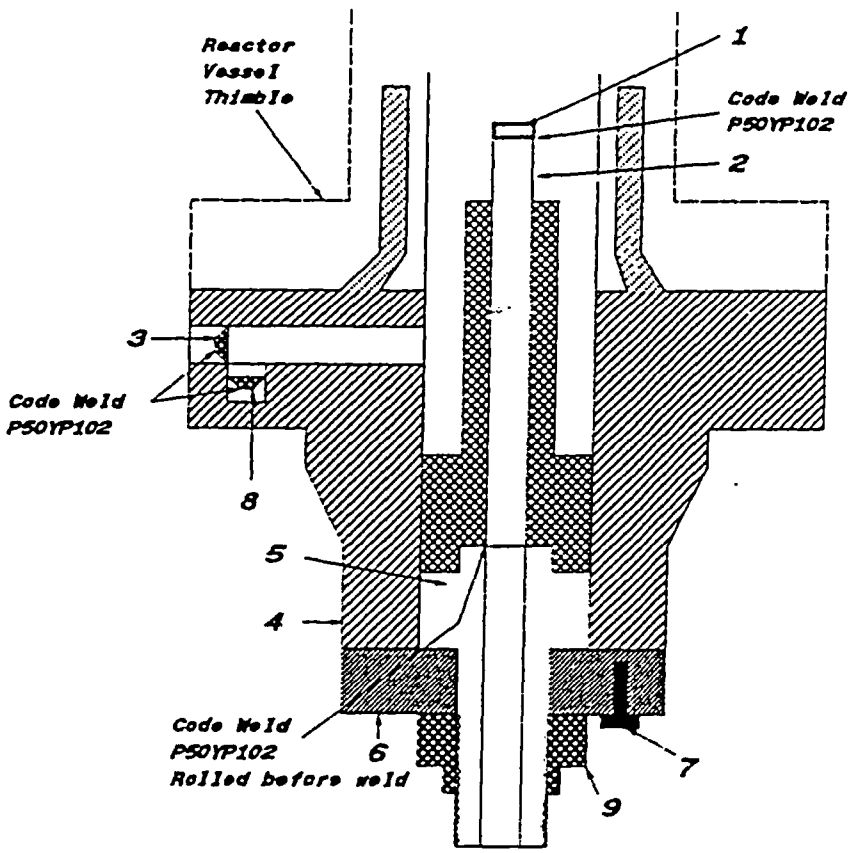

WOT No 01090165 12

ENERGY NORTHWEST
People·Vision·Solutions

FORM NIS-2 OWNER'S REPORT FOR REPAIRS OR REPLACEMENTS
As Required By The Provisions Of The ASME Code Section XI

1. Owner: Energy Northwest
Address: Columbia Generating Station, North Power Plant Loop, Richland, Washington, 99352
2. Plant: Columbia Generating Station
Address: Columbia Generating Station, North Power Plant Loop, Richland, Washington, 99352

Date: 06/29/05
Sheet: 1 Of 1
Unit: Not Applicable

3. (a) Work Performed By: Energy Northwest
(b) Repair Organization P.O. No, Job No, etc.: Energy Northwest
(c) Type Code Symbol Stamp: Not Applicable
(d) Certificate Of Authorization No.: Not Applicable
(e) Expiration Date: Not Applicable
4. Identification Of System: Control Rod Drive (CRD) System
5. (a) Applicable Construction Code: ASME Section III, Code Class 1, 1971 Edition with no Addenda, Code Case: 1361-1
(b) Applicable Edition Of ASME Section XI Utilized For Repairs Or Replacements: 1989 Edition with no Addenda, Code Case: None
6. Identification Of Components Repaired Or Replaced And Replacement Components

Name Of Component	Name Of Manufacturer	Manufacturer's Serial No	National Board No	Other I.D.	Year Built	Repaired, Replaced Or Replacement	ASME Code Stamped (Yes Or No) Code Class
CRD	GE	5106	N/A	N/A	1974	Replaced	Yes, Code Class 1
CRD	GE	6717	N/A	N/A	1975	Replacement	Yes, Code Class 1

7. Description Of Work Performed: Replaced Control Rod Drive (CRD) assembly at Core Location 14-11. The replacement work was performed in accordance with plant procedure PPM No 10.5.7 "Control Rod Drive Removal And Replacement" as follows:

1) Removed all eight (8) existing cap screws from the CRD assembly bolted flanged connection.
2) Removed existing CRD assembly, Serial No 5106.
3) Performed VT-1 visual examination on all eight (8) new replacement cap screws. VT-1 visual examination results acceptable.
4) Installed replacement CRD assembly, Serial No 6717.
5) Installed eight (8) VT-1 visually examined new replacement cap screws for the CRD assembly bolted flanged connection.
6) Torqued the cap screws for the CRD assembly bolted flanged connection to the required torque values.
7) Performed VT-2 visual examination during pressure test on CRD assembly bolted flanged connection to confirm pressure boundary integrity of the joint. No leakage was observed during pressure test.

NOTES -

1) The replacement CRD assembly, Serial No 6717 is certified to comply with ASME Section III, Code Class 1, 1971 Edition with no Addenda requirements.
2) New replacement cap screws, SA-540 Gr. B23, Class 4, Heat No 14813.
3) VT-1 visual examination Report No 2RPV-020 for the new replacement cap screws.

WOT No 01090165 12

ENERGY NORTHWEST
People·Vision·Solutions

FORM NIS-2 OWNER'S REPORT FOR REPAIRS OR REPLACEMENTS (Back)

8 Tests Conducted: Hydrostatic [ ] *Pneumatic* [ ] *Nominal Operating Pressure* [ ] *Other* [*]

Test Pressure: 1020 Psig *Test Temperature:* 170° F

Component Design Pressure: 1250 Psig *Temperature:* 575° F

9. Remarks: 1) See attached N-2 Code Data Report for the replacement CRD assembly, Serial No 6717.
2) * Pressure test on the CRD bolted flanged connection - Test pressure of 1020 Psig and test temperature of 170° F recorded during ASME Section XI pressure test in accordance with PPM No OSP-RPV-R801 "Reactor Pressure Vessel Leakage Test".

CERTIFICATE OF COMPLIANCE

We certify that the statements made in this Owner's Report are correct and this replacement *conforms to the rules of the ASME Code, Section XI.*
Type Code Symbol Stamp: Not Applicable
Certificate Of Authorization No.: Not Applicable
Expiration Date: Not Applicable

Prepared By Kuldip Singh *Signed By* Kuldip Singh
Kuldip Singh - Program Lead Engineer (PLE) Kuldip Singh - Program Lead Engineer (PLE)

Date 6/30/05 *Date* 6/30/05

CERTIFICATE OF INSERVICE INSPECTION

I, the undersigned, holding a valid commission issued by the National Board of Boiler and Pressure Vessel Inspectors and the State of Washington *and employed by* Hartford Steam Boiler Of Connecticut of Hartford, Connecticut *have inspected the components described in this Owner's Report during the period* 6-5-2005 *to* 7-7-2005 *and state to the best of my knowledge and belief, the Owner has performed examinations and taken corrective measures described in this Owner's Report in accordance with the requirements of the ASME Code, Section XI.*
By signing this certificate neither the Inspector nor his employer makes any warranty, expressed or implied, concerning the examinations and corrective measures described in this Owner's Report. Furthermore, neither the Inspector nor his employer shall be liable in any manner for any personal injury or property damage or a loss of any kind arising from or connected with this inspection.

Commissions 10165SW A, B, N, E
Inspector's Signature National Board, State, and Endorsements

Date 7-7-2005

W07 No. 01090165 12

FORM N-2 MANUFACTURERS DATA REPORT FOR NUCLEAR PART AND APPURTENANCES

As required by the Provisions of the ASME Code Rules

Philip Ruiz 6/30/05

1. (a) Manufactured by General Electric Company, Castle Hayne Rd., Wilmington, N. C.
(Name and address of Manufacturer of part)

(b) Manufactured for General Electric Company, San Jose, California
(Name and address of Manufacturer of completed nuclear component)

2. Identification-Manufacturer's Serial No. of Part 6717 Nat'l Bd. No.

(a) Constructed According to Drawing No. 761E387G2 Drawing Prepared by D. L. Peterson

(b) Description of Part Inspected Control Rod Drive, Model #7RDB144 C1

(c) Applicable ASME Code: Section III, Edition 1971, Addenda date None, Case No. 1361-1 Class 1

3. Remarks: Standard part for use with Reactor. Hydrostatically tested at 1620 psi minimum.
(Brief description of service for which component was designed)

FOR INFORMATION ONLY

We certify that the statements made in this report are correct and this vessel part or appurtenance as defined in the Code conforms to the rules of construction of the ASME Code Section III.
(The applicable Design Specification and Stress Report are not the responsibility of the part Manufacturer. An appurtenance Manufacturer is responsible for furnishing a separate Design Specification and Stress Report if the appurtenance is not included in the component Design Specification and Stress Report.)

Date July 30 1975 Signed GE, BWRSD - REM (Manufacturer) By [signature]

Certificate of Authorization Expires June 20, 1978 Certificate of Authorization No. NPT - 462

CERTIFICATION OF DESIGN FOR APPURTENANCE (when applicable)

Design information on file at General Electric Co., BWRSD-REM, Castle Hayne Rd., Wilmington

Stress analysis report on file at General Electric Co., BWRSD-REM, Castle Hayne Rd., Wilmington

Design specifications certified by Vernon W. Pence Prof. Eng. State Calif. Reg. No. 14488

Stress analysis report certified by Vernon W. Pence Prof. Eng. State Calif. Reg. No. 14488

CERTIFICATE OF SHOP INSPECTION

I, the undersigned, holding a valid commission issued by the National Board of Boiler and Pressure Vessel Inspectors and/or the State or Province of North Carolina and employed by Department of Labor of State of North Carolina have inspected the part of a pressure vessel described in this Manufacturer's Partial Data Report on July 30 19 75, and state that to the best of my knowledge and belief, the Manufacturer has constructed this part in accordance with the ASME Code Section III.

By signing this certificate, neither the Inspector nor his employer makes any warranty, expressed or implied, concerning the part described in this Manufacturer's Partial Data Report. Furthermore, neither the Inspector nor his employer shall be liable in any manner for any personal injury or property damage or a loss of any kind arising from or connected with this inspection.

Date July 30 19 75

E. L. Sherrill
Inspector's Signature

Commissions NC 723, PA. WC 1766, Ohio
National Board, State, Province and No.

2X0036788S

761E387G2
6717

FORM N-2 (back)

Items 4–8 incl. to be completed for single wall vessels, jackets of jacketed vessels, or shells of heat exchangers.

4. Shell: Material ____ (Kind & Spec. No.) T.S. ____ (Min. of Range Specified) Nominal Thickness ____ in. Corrosion Allowance ____ in. Dia. ____ ft. ____ in. Length ____ ft. ____ in.

5. Seams: Long ____ H.T.[1] ____ R.T. ____ Efficiency ____ %

Girth ____ H.T.[1] ____ R.T. ____ No. of Courses ____

6. Heads: (a) Material ____ T.S. ____ (b) Material ____ T.S. ____

Location (Top, bottom, ends)	Thickness	Crown Radius	Knuckle Radius	Elliptical Ratio	Conical Apex Angle	Hemispherical Radius	Flat Diameter	Side to Press. (Conv. or Conc.)
(a)								
(b)								

If removable, bolts used ____ (Material, Spec. No., T.S., Size, Number) Other fastening ____ (Describe or attach sketch)

7. Jacket Closure: ____ (Describe as ogee end weld, bar, etc. If bar give dimensions, if bolted, describe or sketch)

8. Design pressure[2] 1250 psi at 575 °F Drop Weight ____ Charpy Impact ____ ft-lb at temp. of ____ °F

FOR INFORMATIONAL USE ONLY

Items 9 and 10 to be completed for tube sections

9. Tube Sheets: Stationary. Material ____ (Kind & Spec. No.) Dia. ____ (Subject to pressure) Thickness ____ in. Attachment ____ (Welded, Bolted)

Floating. Material ____ Dia. ____ Thickness ____ in. Attachment ____

10. Tubes: Material ____ O.D. ____ in. Thickness ____ inches or gage. Number ____ Type ____ (Str. or U)

Items 11–14 incl. to be completed for inner chambers of jacketed vessels, or channels of heat exchangers.

11. Shell: Material ____ (Kind & Spec. No.) T.S. ____ (Min. of Range Specified) Nominal Thickness ____ in. Corrosion Allowance ____ in. Dia. ____ ft. ____ in. Length ____ ft. ____ in.

12. Seams: Long ____ H.T.[1] ____ R.T. ____ Efficiency ____ %

Girth ____ H.T.[1] ____ R.T. ____ No. of Courses ____

13. Heads (a) Material ____ T.S. ____ (b) Material ____ T.S. ____

Location	Thickness	Crown Radius	Knuckle Radius	Elliptical Ratio	Conical Apex Angle	Hemispherical Radius	Flat Diameter	Side to Press. (Conv. or Conc.)
(a) Top, bottom, ends								
(b) Channel								

If removable, bolts used (a) ____ (b) ____ (c) ____ Other fastening ____ (Describe or attach sketch)

14. Design pressure[2] ____ psi at ____ °F Drop Weight ____ Charpy Impact ____ ft-lb at temp. of ____ °F

Items below to be completed for all vessels where applicable.

15. Safety Valve Outlets: Number ____ Size ____ Location ____

16. Nozzles:

Purpose (Inlet, Outlet, Drain)	Number	Dia. or Size	Type	Material	Thickness	Reinforcement Material	How Attached

17. Inspection Openings: Manholes, No. ____ Size ____ Location ____
Handholes, No. ____ Size ____ Location ____
Threaded, No. ____ Size ____ Location ____

18. Supports: Skirt ____ (Yes or No) Lugs ____ (Number) Legs ____ (Number) Other ____ (Describe) Attached ____ (Where & How)

[1] If Postweld Heat-Treated.
[2] [illegible]

2X00367884

WOT No 01090165 13

ENERGY NORTHWEST
People·Vision·Solutions

FORM NIS-2 OWNER'S REPORT FOR REPAIRS OR REPLACEMENTS
As Required By The Provisions Of The ASME Code Section XI

Date: 06/29/05
Sheet: 1 Of 1
Unit: Not Applicable

1. **Owner:** Energy Northwest
   Address: Columbia Generating Station, North Power Plant Loop, Richland, Washington, 99352
2. **Plant:** Columbia Generating Station
   Address: Columbia Generating Station, North Power Plant Loop, Richland, Washington, 99352
3. (a) **Work Performed By:** Energy Northwest
   (b) **Repair Organization P.O. No, Job No, etc.:** Energy Northwest
   (c) **Type Code Symbol Stamp:** Not Applicable
   (d) **Certificate Of Authorization No.:** Not Applicable
   (e) **Expiration Date:** Not Applicable
4. **Identification Of System:** Control Rod Drive (CRD) System
5. (a) **Applicable Construction Code:** ASME Section III, Code Class 1, 1974 Edition with Winter 1975 Addenda, Code Case: 1361-2
   (b) **Applicable Edition Of ASME Section XI Utilized For Repairs Or Replacements:** 1989 Edition with no Addenda, Code Case: None
6. **Identification Of Components Repaired Or Replaced And Replacement Components**

Name Of Component	Name Of Manufacturer	Manufacturer's Serial No	National Board No	Other I.D.	Year Built	Repaired, Replaced Or Replacement	ASME Code Stamped (Yes Or No) Code Class
CRD	GE	7231	N/A	N/A	1975	Replaced	Yes, Code Class 1
CRD	GE	A8591	N/A	N/A	1988	Replacement	Yes, Code Class 1

7. **Description Of Work Performed:** Replaced Control Rod Drive (CRD) assembly at Core Location 18-15. The replacement work was performed in accordance with plant procedure PPM No 10.5.7 "Control Rod Drive Removal And Replacement" as follows:

1) Removed all eight (8) existing cap screws from the CRD assembly bolted flanged connection.
2) Removed existing CRD assembly, Serial No 7231.
3) Performed VT-1 visual examination on all eight (8) new replacement cap screws. VT-1 visual examination results acceptable.
4) Installed replacement CRD assembly, Serial No A8591.
5) Installed eight (8) VT-1 visually examined new replacement cap screws for the CRD assembly bolted flanged connection.
6) Torqued the cap screws for the CRD assembly bolted flanged connection to the required torque values.
7) Performed VT-2 visual examination during pressure test on CRD assembly bolted flanged connection to confirm pressure boundary integrity of the joint. No leakage was observed during pressure test.

NOTES -

1) The replacement CRD assembly, Serial No A8591 is certified to comply with ASME Section III, Code Class 1, 1974 Edition with Winter 1975 Addenda requirements.
2) New replacement cap screws, SA-540 Gr. B23, Class 4, Heat No 14813.
3) VT-1 visual examination Report No 2RPV-020 for the new replacement cap screws.

WOT No 01090165 13

ENERGY NORTHWEST
People·Vision·Solutions

FORM NIS-2 OWNER'S REPORT FOR REPAIRS OR REPLACEMENTS (Back)

8 Tests Conducted: Hydrostatic ☐ *Pneumatic* ☐ *Nominal Operating Pressure* ☐ *Other* ☒

Test Pressure: 1020 Psig *Test Temperature:* 170° F
Component Design Pressure: 1250 Psig *Temperature:* 575° F

9. Remarks: 1) See attached N-2 Code Data Report for the replacement CRD assembly, Serial No A8591.
2) * Pressure test on the CRD bolted flanged connection - Test pressure of 1020 Psig and test temperature of 170° F recorded during ASME Section XI pressure test in accordance with PPM No OSP-RPV-R801 "Reactor Pressure Vessel Leakage Test".

CERTIFICATE OF COMPLIANCE

We certify that the statements made in this Owner's Report are correct and this replacement *conforms to the rules of the ASME Code, Section XI.*
Type Code Symbol Stamp: Not Applicable
Certificate Of Authorization No.: Not Applicable
Expiration Date: Not Applicable

Prepared By Kuldip Singh - Program Lead Engineer (PLE) *Signed By* Kuldip Singh - Program Lead Engineer (PLE)

Date 6/30/05 *Date* 6/30/05

CERTIFICATE OF INSERVICE INSPECTION

I, the undersigned, holding a valid commission issued by the National Board of Boiler and Pressure Vessel Inspectors and the State of Washington *and employed by* Hartford Steam Boiler Of Connecticut of Hartford, Connecticut *have inspected the components described in this Owner's Report during the period* 5-6-2005 *to* 7-7-2005 *and state to the best of my knowledge and belief, the Owner has performed examinations and taken corrective measures described in this Owner's Report in accordance with the requirements of the ASME Code, Section XI.*
By signing this certificate neither the Inspector nor his employer makes any warranty, expressed or implied, concerning the examinations and corrective measures described in this Owner's Report. Furthermore, neither the Inspector nor his employer shall be liable in any manner for any personal injury or property damage or a loss of any kind arising from or connected with this inspection.

Inspector's Signature *Commissions* 1065SSW A, B, N, I
National Board, State, and Endorsements

Date 7-7-2005

WOT No. 01090165 13
6/30/05

FORM N-2 NPT CERTIFICATE HOLDERS' DATA REPORT FOR NUCLEAR PART AND APPURTENANCES*
As required by the Provision of the ASME Code Rules, Section III, Div. 1

1. Manufactured & Certified by: GE Company, 2117 Castle Hayne Rd., Wilmington, N.C. 28402
(Name and Address of NPT Certificate Holder)

(b) Manufactured for: WNP-2, RICHLAND, Wa. 99352
(Name and Address of N Certificate Holder for completed nuclear component)

2. Identification-Certificate Holders's S/N of Part: A8591 Nat'l Bd. No. N/A

(a) Constructed According to Drawing No: 919D258G003 Dwg. Prepared by D. L. Peterson

(b) Description of Part Inspected: CYLINDER TUBE & FLANGE

(c) Applicable ASME Code: Section III, Edition 1974, Addenda Date W'75 Case No. 1361-2 Class 1

3. REMARKS: Sub-assembly of Control Rod Drive for use with reactor.
(Brief description of service for which component was designed)
Hydrostatically tested at 1825 psi. min.

*Sheet 1 of 2

We certify that the statements in this report are correct and this vessel part or appurtenance as defined in the code conforms to the rules of construction of the ASME Code Section III. (The applicable Designed Specification and Stress Report are not the responsibility of the NPT Certificate Holder for parts. An NPT Certification Holder for appurtenances is responsible for furnishing a separate Design Specification and Stress Report if the appurtenance is not included in the component Design Specification and Stress Report).

DATE: 12/31, 19 88 Signed GE-NEBG-NF&CM-QA By
(NPT Certificate Holder)

Certificate Of Authorization Expires: 6/16/90 Certification of Authorization No.: NPT N-1151

CERTIFICATION OF DESIGN FOR APPURTENANCE

Design information on file at GE COMPANY, SAN JOSE, CALIFORNIA

Stress analysis report on file at GE COMPANY, SAN JOSE, CALIFORNIA
DC22A6253 Rev. 0
Design specification certified by BJORN HAABERG Prof. Eng. State CALIF. Reg. No. 15570
DC22A6254 Rev. 0.
Stress analysis report certified by EDWARD YOSHIO Prof. Eng. State CALIF. Reg. No. M018646

CERTIFICATION OF SHOP INSPECTION

I, the undersigned, holding a valid commission by the National Board of Boiler and Pressure Inspectors and/or the State or Province of NORTH CAROLINA and employed by DEPARTMENT OF LABOR of STATE OF NORTH CAROLINA have inspected the part of a pressure vessel described in this Partial Data Report on 12-31 1988, and state that to the best of my knowledge and belief, the NPT Certificate Holder has constructed this part in accordance with the ASME Code Section III.

By signing this certificate, neither the Inspector nor his employer makes any warranty, expressed or implied, concerning the part described in the Partial Data Report. Furthermore, neither the Inspector nor his employer shall be liable in any manner for any personal injury or property damages or a loss of any kind arising from or connected with this inspection.

12-31, 1988 J F Shondelle NB 773, PA-WC2160, OHIO
DATE Inspector's Signature National Board, State, Province and No.

*Supplemental sheets in form of lists, sketches or drawing may be used provided (1) size is 8-1/2" X 11", (2) information in 1-2 on this Data Report is included on each sheet, and (3) each sheet is numbered and number of sheets is recorded in Item 3. "REMARKS"

(10/77)

VERIFIED & ACCEPTED 1-18-89
R.I. Inspector Date

FORM M-2 (back)

Items 4-8 Incl. to be completed for single wall vessels, jackets vessels, or shells of heat exchangers.

4. Shell: Material_____ T.S._____ Nominal Thickness___in. Corrosion Allowance____in Dia.____ft.___in. Length___ft.____in.
(Kind & Spec.No) (Min.ofRange Specified)

5. Seams: Long_____ H.T.[1]_____ R.T._____ Efficiency_____%

Girth_____ H.T.[1]_____ R.T._____ No. of Courses_____

6. Heads: (a) Material_____ T.S._____ (b)Material_____ T.S._____

Location (Top Bottom,Ends)	Thickness	Crown Radius	Knuckle Radius	Elliptical Ratio	Concial Apex Angle	Hemispherical Radius	Flat Diameter	Side to Press. (conv.or conc.)
(a)_____	_____	_____	_____	_____	_____	_____	_____	_____
(b)_____	_____	_____	_____	_____	_____	_____	_____	_____

If removable, bolts used_____ Other fastening_____
(Material,Spec.No., T.S. Size Number) (Describe or attach sketch)

7. Jacket Closure:_____
(Describe as ogee and weld,bar,etc. If bar give dimensions, if bolts, describe or shetch)

8. Design Pressure [2] 1250 psi at 575 °F
Drop Weight_____
Charpy Impact_____ ft-lb
at temp. of_____ °f

Items 9 and 10 to be completed for tube sections.

9. Tube Sheets: Stationary Mat'l._____ Dia._____ Thickness__in. Attachment_____
(Kind of Spec. No.) (Subj.to Press.) (Welded, Bolted)
Floating. Material _____ Dia._____ Thickness____in. Attachment_____

10. Tubes: Material_____ O.D._____in. Thickness_____ inches or gage. Number_____ Type_____
(Str. or U)

Items 11-14 incl. to be completed for inner chambers of jacketed vessels, or channels of heat exchangers

11. Shell: Material_____ T.S._____ Nominal Thickness___in. Corrosion Allowance___in. Dia.___ft.___in___Length___ft.___in.
(Kind&Spec.No.) (Min.ofRange Specified)

12. Seams: Long_____ H.T.[1]_____ R.T._____ Efficiency_____%
Girth_____ H.T.[1]_____ R.T._____ No. of Courses_____

13. Heads (a) Material_____ T.S._____ (b)Material_____ T.S._____

Location (a)Top, Bottom, End	Ticnkess	Crown Radius	Knucle Radius	Elliptical Ratio	Concial Apex Angle	Hemispherical Radius	Fat Diameter	Side to Press (Conv.or Conc.)
	_____	_____	_____	_____	_____	_____	_____	_____
(b)Channel	_____	_____	_____	_____	_____	_____	_____	_____

If removable, bolts used (a)_____ (b)_____ (c)_____ Other Fastening_____
(Describe or attach sketch

14. Design pressure[2]_____ psi at_____ °F
Drop Weight_____,
Charpy Impact_____ ft-lb
at temp. of _____ °F

Items below to be completed for all vessels where applicable.

15. Safety Valve Outlets: Number_____ Size_____ Location_____

16. Nozzles:

Purpose (Inlet Outlet, Drain)	Number	Dia or Size	Type	Material	Thickness	Reinforcement Material	Attached
_____	_____	_____	_____	_____	_____	_____	_____
_____	_____	_____	_____	_____	_____	_____	_____

17. Inspection Openings: Manholes, No._____ Size_____ Location_____
Handles, No._____ Size_____ Location_____
Threaded, No._____ Size_____ Location_____

18. Supports: Shirt_____ Lugs_____ Legs_____ Other_____ Attached_____
(Yes or No) (Number) (Number) (Describe) (Where & How)

[1] If Postweld Heat-Treated.

[2] List other internal or external pressure with conincident temperature when applicalbe.

WOT NO. 0109016513

FORM N-2 NPT CERTIFICATE HOLDERS' DATA REPORT FOR NUCLEAR PART AND APPURTENANCES*
As required by the Provision of the ASME Code Rules, Section III, Div. I

1. Manufactured & Certified by: GE Company, 2117 Castle Hayne Rd., Wilmington, N.C. 28402 6/30/05
(Name and Address of NPT Certificate Holder)

(b) Manufactured for: WNP-2, RICHLAND, Wa. 99352
(Name and Address of N Certificate Holder for completed nuclear component)

2. Identification-Certificate Holders's S/N of Part: A8591 Nat'l Bd. N. N/A

(a) Constructed According to Drawing No: 919D258G003 Dwg. Prepared by D. L. Peterson

(b) Description of Part Inspected: CYLINDER TUBE & FLANGE

(C) Applicable ASME Code: Section III, Edition 1974, Addenda Date W'75, Case No. 1361-2 Class 1

. REMARKS: Sub-assembly of Control Rod Drive for use with reactor.
(Brief description of service for which component was designed)
Hydrostatically tested at 1825 psi. min.

*Sheet 2 of 2

1. Cap 167A2343P1
SA182-F304
3/8 thick X 1 1/16 OD

2. Indicator Tube 104B1336P3
SA312-TP316
3/4 sch 40-seamless pipe
0.113 wall thickness
1.065 max. dia.

3. Plug 159A1176P1
SA182-F304
1/4 thick x 0.812 OD

4. Flange 919D610P1 (719E474)
SA182-F304
3.37 thick x 9 5/8 OD

5. Head 129B3539P3, P5
SA182-F304
7/8 thick x 2.875 Dia.

6. Ring Flange 114B5122P2
SA182-F304
1" thick x 5.0 OD x 1.75 ID

7. Cap Screw 117C4516P2
SA193-B6
6 ea. 1/2 dia. on 4 1/8 bolt circle

8. Plug 175A7961P1
SA182-F304
0.38 thick x 1.307 dia.

9. Nut 114B5460P1
SA193-B8A
1.30 thick x 2.62 dia.

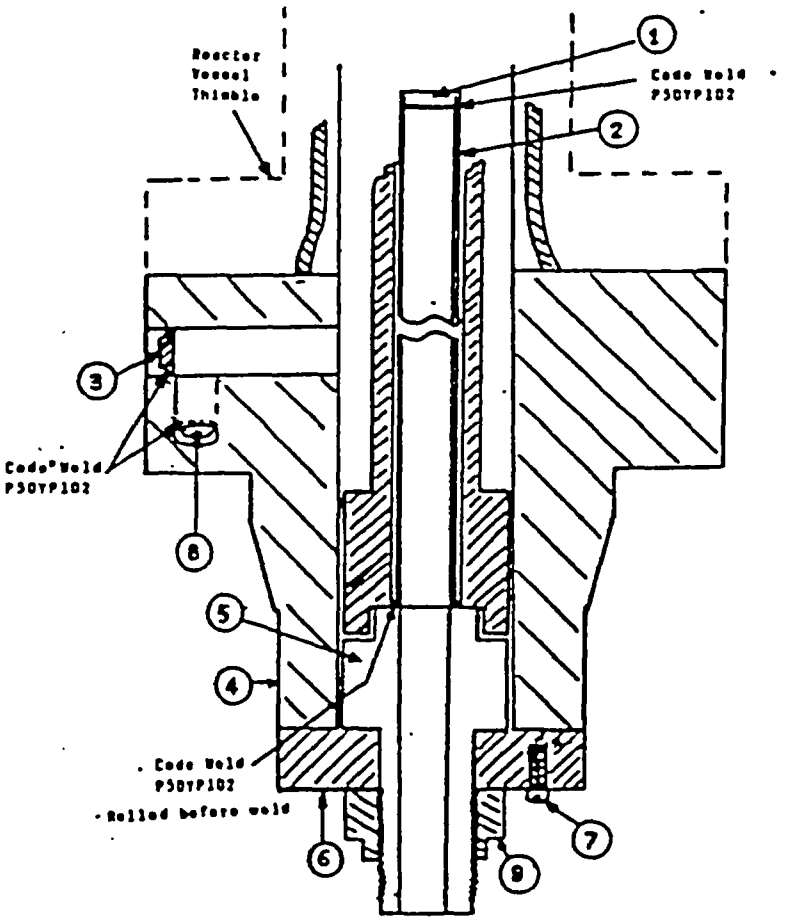

WOT No 01090165 14

ENERGY NORTHWEST
People·Vision·Solutions

FORM NIS-2 OWNER'S REPORT FOR REPAIRS OR REPLACEMENTS
As Required By The Provisions Of The ASME Code Section XI

Date: 06/29/05
Sheet: 1 Of 1
Unit: Not Applicable

1. **Owner:** Energy Northwest
   Address: Columbia Generating Station, North Power Plant Loop, Richland, Washington, 99352
2. **Plant:** Columbia Generating Station
   Address: Columbia Generating Station, North Power Plant Loop, Richland, Washington, 99352
3. **(a) Work Performed By:** Energy Northwest
   (b) Repair Organization P.O. No, Job No, etc.: Energy Northwest
   (c) Type Code Symbol Stamp: Not Applicable
   (d) Certificate Of Authorization No.: Not Applicable
   (e) Expiration Date: Not Applicable
4. **Identification Of System:** Control Rod Drive (CRD) System
5. **(a) Applicable Construction Code:** ASME Section III, Code Class 1, 1974 Edition with Winter 1975 Addenda, Code Case: 1361-2
   (b) Applicable Edition Of ASME Section XI Utilized For Repairs Or Replacements: 1989 Edition with no Addenda, Code Case: None
6. **Identification Of Components Repaired Or Replaced And Replacement Components**

Name Of Component	Name Of Manufacturer	Manufacturer's Serial No	National Board No	Other I.D.	Year Built	Repaired, Replaced Or Replacement	ASME Code Stamped (Yes Or No) Code Class
CRD	GE	6592	N/A	N/A	1975	Replaced	Yes, Code Class 1
CRD	GE	A8668	N/A	N/A	1988	Replacement	Yes, Code Class 1

7. **Description Of Work Performed:** Replaced Control Rod Drive (CRD) assembly at Core Location 26-39. The replacement work was performed in accordance with plant procedure PPM No 10.5.7 "Control Rod Drive Removal And Replacement" as follows:

1) Removed all eight (8) existing cap screws from the CRD assembly bolted flanged connection.
2) Removed existing CRD assembly, Serial No 6592.
3) Performed VT-1 visual examination on all eight (8) new replacement cap screws. VT-1 visual examination results acceptable.
4) Installed replacement CRD assembly, Serial No A8668.
5) Installed eight (8) VT-1 visually examined new replacement cap screws for the CRD assembly bolted flanged connection.
6) Torqued the cap screws for the CRD assembly bolted flanged connection to the required torque values.
7) Performed VT-2 visual examination during pressure test on CRD assembly bolted flanged connection to confirm pressure boundary integrity of the joint. No leakage was observed during pressure test.

NOTES -

1) The replacement CRD assembly, Serial No A8668 is certified to comply with ASME Section III, Code Class 1, 1974 Edition with Winter 1975 Addenda requirements.
2) New replacement cap screws, SA-540 Gr. B23, Class 4, Heat No 14813.
3) VT-1 visual examination Report No 2RPV-020 for the new replacement cap screws.

WOT No 01090165 14

ENERGY NORTHWEST
People·Vision·Solutions

FORM NIS-2 OWNER'S REPORT FOR REPAIRS OR REPLACEMENTS (Back)

8 Tests Conducted: Hydrostatic ☐ *Pneumatic* ☐ *Nominal Operating Pressure* ☐ *Other* ☐ *

Test Pressure: 1020 Psig *Test Temperature:* 170° F

Component Design Pressure: 1250 Psig *Temperature:* 575° F

9. Remarks: 1) See attached N-2 Code Data Report for the replacement CRD assembly, Serial No A8668.
2) * Pressure test on the CRD bolted flanged connection - Test pressure of 1020 Psig and test temperature of 170° F recorded during ASME Section XI pressure test in accordance with PPM No OSP-RPV-R801 "Reactor Pressure Vessel Leakage Test".

CERTIFICATE OF COMPLIANCE

We certify that the statements made in this Owner's Report are correct and this replacement *conforms to the rules of the ASME Code, Section XI.*
Type Code Symbol Stamp: Not Applicable
Certificate Of Authorization No.: Not Applicable
Expiration Date: Not Applicable

Prepared By Kuldip Singh - Program Lead Engineer (PLE) *Signed By* Kuldip Singh - Program Lead Engineer (PLE)

Date 6/30/05 *Date* 6/30/05

CERTIFICATE OF INSERVICE INSPECTION

I, the undersigned, holding a valid commission issued by the National Board of Boiler and Pressure Vessel Inspectors and the State of Washington *and employed by* Hartford Steam Boiler Of Connecticut of Hartford, Connecticut *have inspected the components described in this Owner's Report during the period* 5-6-2005 *to* 7-8-2005 *and state to the best of my knowledge and belief, the Owner has performed examinations and taken corrective measures described in this Owner's Report in accordance with the requirements of the ASME Code, Section XI.*
By signing this certificate neither the Inspector nor his employer makes any warranty, expressed or implied, concerning the examinations and corrective measures described in this Owner's Report. Furthermore, neither the Inspector nor his employer shall be liable in any manner for any personal injury or property damage or a loss of any kind arising from or connected with this inspection.

Inspector's Signature *Commissions* 10655W A, B, N, I
National Board, State, and Endorsements

Date 7-8-2005

WOT No. 0109016514

6/30/05

FORM N-2 NPT CERTIFICATE HOLDERS' DATA REPORT FOR NUCLEAR PART AND APPURTENANCES*
As required by the Provision of the ASME Code Rules, Section III, Div. 1

1. Manufactured & Certified by: GE Company, 2117 Castle Hayne Rd., Wilmington, N.C. 28402
(Name and Address of NPT Certificate Holder)

(b) Manufactured for: WNP-2, RICHLAND, Wa. 99352
(Name and Address of N Certificate Holder for completed nuclear component)

2. Identification-Certificate Holders's S/N of Part: A8668 Nat'l Bd. No. N/A

(a) Constructed According to Drawing No: 919D258G003 Dwg. Prepared by D. L. Peterson

(b) Description of Part Inspected: CYLINDER TUBE & FLANGE

(c) Applicable ASME Code: Section III, Edition 1974, Addenda Date W'75 Case No. 1361-2 Class 1

. REMARKS: Sub-assembly of Control Rod Drive for use with reactor.
(Brief description of service for which component was designed)
Hydrostatically tested at 1825 psi. min.

*Sheet 1 of 2

We certify that the statements in this report are correct and this vessel part or appurtenance as defined in the code conforms to the rules of construction of the ASME Code Section III. (The applicable Designed Specification and Stress Report are not the responsibility of the NPT Certificate Holder for parts. An NPT Certification Holder for appurtenances is responsible for furnishing a separate Design Specification and Stress Report if the appurtenance is not included in the component Design Specification and Stress Report).

DATE: 5/27, 19 88 Signed GE-NEBG-NF&CM-QA By
(NPT Certificate Holder)

ificate Of Authorization Expires: 6/16/90 Certification of Authorization No.: NPT N-1151

CERTIFICATION OF DESIGN FOR APPURTENANCE

Design information on file at GE COMPANY, SAN JOSE, CALIFORNIA

Stress analysis report on file at GE COMPANY, SAN JOSE, CALIFORNIA
DC22A6253 Rev. 0
Design specification certified by BJORN HAABERG Prof. Eng. State CALIF. Reg. No. 15570
DC22A6254 Rev. 0.
Stress analysis report certified by EDWARD YOSHIO Prof. Eng. State CALIF. Reg. No. M018646

CERTIFICATION OF SHOP INSPECTION

I, the undersigned, holding a valid commission by the National Board of Boiler and Pressure Inspectors and/or the State or Province of NORTH CAROLINA and employed by DEPARTMENT OF LABOR of STATE OF NORTH CAROLINA have inspected the part of a pressure vessel described in this Partial Data Report on 5/27 1988, and state that to the best of my knowledge and belief, the NPT Certificate Holder has constructed this part in accordance with the ASME Code Section III.

By signing this certificate, neither the Inspector nor his employer makes any warranty, expressed or implied, concerning the part described in the Partial Data Report. Furthermore, neither the Inspector nor his employer shall be liable in any manner for any personal injury or property damages or a loss of any kind arising from or connected with this inspection.

5/27, 1988 — Inspector's Signature — N.C. 723, PA.WC1766, OHIO

DATE — National Board, State, Province and No.

plemental sheets in form of lists, sketches or drawing may be used provided (1) size is /2" X 11", (2) information in 1-2 on this Data Report is included on each sheet, and (3) each sheet is numbered and number of sheets is recorded in Item 3. "REMARKSs"

10/77)

FORM N-2 (back)

Items 4-8 Incl. to be completed for single wall vessels, jackets vessels, or shells of heat exchangers.

4. Shell: Material_____ T.S._____ Nominal Thickness___in. Corrosion Allowance___in Dia.___ft.___in. Length___ft.___in.
(Kind & Spec.No) (Min.ofRange Specified)

5. Seams: Long_____ H.T.[1]_____ R.T._____ Efficiency_____%

Girth_____ H.T.[1]_____ R.T._____ No. of Courses_____

6. Heads: (a) Material_____ T.S._____ (b)Material_____ T.S._____

Location (Top Bottom,Ends)	Thickness	Crown Radius	Knuckle Radius	Elliptical Ratio	Concial Apex Angle	Hemispherical Radius	Flat Diameter	Side to Press. (conv.or conc.)
(a)_____	_____	_____	_____	_____	_____	_____	_____	_____
(b)_____	_____	_____	_____	_____	_____	_____	_____	_____

If removable, bolts used_____ Other fastening_____
(Material,Spec.No., T.S. Size Number) (Describe or attach sketch)

7. Jacket Closure:_____
(Describe as ogee and weld,bar,etc. If bar give dimensions, if bolts, describe or sketch)

8. Design Pressure [2] 1250 psi at 575 °F Drop Weight_____ Charpy Impact_____ ft-lb at temp. of_____ °f

Items 9 and 10 to be completed for tube sections.

9. Tube Sheets: Stationary Mat'l._____ Dia._____ Thickness___in. Attachment_____
(Kind of Spec. No.) (Subj.to Press.) (Welded, Bolted)
Floating. Material _____ Dia._____ Thickness___in. Attachment_____

10. Tubes: Material_____ O.D.___in. Thickness_____ inches or gage. Number____ Type_____
(Str. or U)

Items 11-14 incl. to be completed for inner chambers of jacketed vessels, or channels of heat exchangers

11. Shell: Material____ T.S.____ Nominal Thickness___in. Corrosion Allowance___in. Dia.___ft.___in Length___ft.___in.
(Kind&Spec.No.) (Min.ofRange Specified)

12. Seams: Long_____ H.T.[1]_____ R.T._____ Efficiency_____%
Girth_____ H.T.[1]_____ R.T._____ No. of Courses_____

13. Heads (a) Material_____ T.S._____ (b)Material_____ T.S._____

Location	Ticnkess	Crown Radius	Knucle Radius	Elliptical Ratio	Concial Apex Angle	Hemispherical Radius	Fat Diameter	Side to Press (Conv.or Conc.)
(a)Top, Bottom, End	_____	_____	_____	_____	_____	_____	_____	_____
(b)Channel	_____	_____	_____	_____	_____	_____	_____	_____

If removable, bolts used (a)_____ (b)_____ (c)_____ Other Fastening_____
(Describe or attach sketch

14. Design pressure[2]_____ psi at_____ °F Drop Weight_____, Charpy Impact_____ ft-lb at temp. of _____ °F

Items below to be completed for all vessels where applicable.

15. Safety Valve Outlets: Number_____ Size_____ Location_____

16. Nozzles:

Purpose (Inlet Outlet, Drain)	Number	Dia or Size	Type	Material	Thickness	Reinforcement Material	Attached
_____	_____	_____	_____	_____	_____	_____	_____
_____	_____	_____	_____	_____	_____	_____	_____

17. Inspection Openings: Manholes, No._____ Size_____ Location_____
Handles, No._____ Size_____ Location_____
Threaded, No._____ Size_____ Location_____

18. Supports: Shirt_____ Lugs_____ Legs_____ Other_____ Attached_____
(Yes or No) (Number) (Number) (Describe) (Where & How)

[1] If Postweld Heat-Treated.

[2] List other internal or external pressure with conincident temperature when applicalbe.

WOT N00 09016514

FORM N-2 NPT CERTIFICATE HOLDERS' DATA REPORT FOR NUCLEAR PART AND APPURTENANCES
As required by the Provision of the ASME Code Rules, Section III, Div. I

1. Manufactured & Certified by: GE Company, 2117 Castle Bayne Rd., Wilmington, N.C. 28402
(Name and Address of NPT Certificate Holder)
(b) Manufactured for: WNP-2, RICHLAND, Wa. 99352
(Name and Address of N Certificate Holder for completed nuclear component)

2. Identification-Certificate Holders's S/N of Part: A8668 Nat'l Bd. N. N/A

(a) Constructed According to Drawing No: 919D258G003 Dwg. Prepared by D. L. Peterson

(b) Description of Part Inspected: CYLINDER TUBE & FLANGE

(C) Applicable ASME Code: Section III, Edition 1974, Addenda Date W'75, Case No. 1361-2 Class 1

3. REMARKS: Sub-assembly of Control Rod Drive for use with reactor.
(Brief description of service for which component was designed)
Hydrostatically tested at 1825 psi. min.

*Sheet 2 of 2

1. Cap 167A2343P1
SA182-F304
3/8 thick X 1 1/16 OD

2. Indicator Tube 104B1336P3
SA312-TP316
3/4 sch 40-seamless pipe
0.113 wall thickness
1.065 max. dia.

3. Plug 159A1176P1
SA182-F304
1/4 thick x 0.812 OD

4. Flange 919D610P1 (719E474)
SA182-F304
3.37 thick x 9 5/8 OD

5. Head 129B3539P3, P5
SA182-F304
7/8 thick x 2.875 Dia.

6. Ring Flange 114B5122P2
SA182-F304
1" thick x 5.0 OD x 1.75 ID

7. Cap Screw 117C4516P2
SA193-B6
6 ea. 1/2 dia. on 4 1/8 bolt circle

8. Plug 175A7961P1
SA182-F304
0.38 thick x 1.307 dia.

9. Nut 114B5460P1
SA193-B8A
1.30 thick x 2.62 dia.

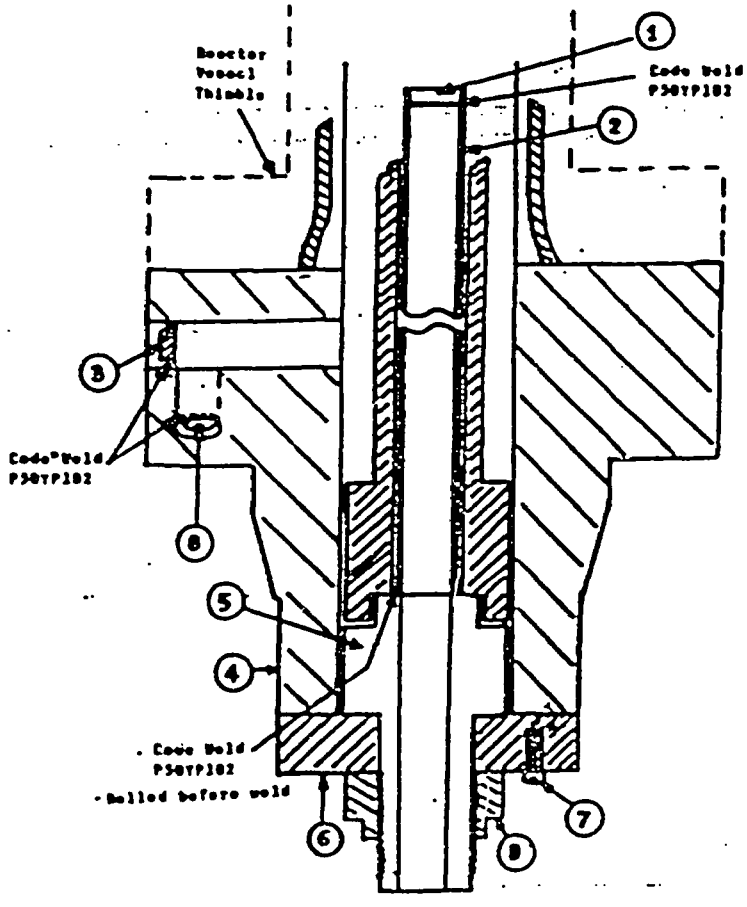

WOT No 01090165 15

ENERGY NORTHWEST
People·Vision·Solutions

FORM NIS-2 OWNER'S REPORT FOR REPAIRS OR REPLACEMENTS
As Required By The Provisions Of The ASME Code Section XI

Date: 06/29/05
Sheet: 1 Of 1
Unit: Not Applicable

1. **Owner:** Energy Northwest
   Address: Columbia Generating Station, North Power Plant Loop, Richland, Washington, 99352
2. **Plant:** Columbia Generating Station
   Address: Columbia Generating Station, North Power Plant Loop, Richland, Washington, 99352
3. (a) **Work Performed By:** Energy Northwest
   (b) **Repair Organization P.O. No, Job No, etc.:** Energy Northwest
   (c) **Type Code Symbol Stamp:** Not Applicable
   (d) **Certificate Of Authorization No.:** Not Applicable
   (e) **Expiration Date:** Not Applicable
4. **Identification Of System:** Control Rod Drive (CRD) System
5. (a) **Applicable Construction Code:** ASME Section III, Code Class 1, 1974 Edition with Winter 1975 Addenda, Code Case: 1361-2
   (b) **Applicable Edition Of ASME Section XI Utilized For Repairs Or Replacements:** 1989 Edition with no Addenda, Code Case: None
6. **Identification Of Components Repaired Or Replaced And Replacement Components**

Name Of Component	Name Of Manufacturer	Manufacturer's Serial No	National Board No	Other I.D.	Year Built	Repaired, Replaced Or Replacement	ASME Code Stamped (Yes Or No) Code Class
CRD	GE	5409	N/A	N/A	1974	Replaced	Yes, Code Class 1
CRD	GE	A9544	N/A	N/A	1995	Replacement	Yes, Code Class 1

7. **Description Of Work Performed:** Replaced Control Rod Drive (CRD) assembly at Core Location 26-47. The replacement work was performed in accordance with plant procedure PPM No 10.5.7 "Control Rod Drive Removal And Replacement" as follows:

1) Removed all eight (8) existing cap screws from the CRD assembly bolted flanged connection.
2) Removed existing CRD assembly, Serial No 5409.
3) Performed VT-1 visual examination on all eight (8) new replacement cap screws. VT-1 visual examination results acceptable.
4) Installed replacement CRD assembly, Serial No A9544.
5) Installed eight (8) VT-1 visually examined new replacement cap screws for the CRD assembly bolted flanged connection.
6) Torqued the cap screws for the CRD assembly bolted flanged connection to the required torque values.
7) Performed VT-2 visual examination during pressure test on CRD assembly bolted flanged connection to confirm pressure boundary integrity of the joint. No leakage was observed during pressure test.

NOTES

1) The replacement CRD assembly, Serial No A9544 is certified to comply with ASME Section III, Code Class 1, 1974 Edition with Winter 1975 Addenda requirements.
2) New replacement cap screws, SA-540 Gr. B23, Class 4, Heat No 14813.
3) VT-1 visual examination Report No 2RPV-020 for the new replacement cap screws.

WOT No 01090165 15

ENERGY NORTHWEST
People·Vision·Solutions

FORM NIS-2 OWNER'S REPORT FOR REPAIRS OR REPLACEMENTS (Back)

8 Tests Conducted: Hydrostatic ☐ *Pneumatic* ☐ *Nominal Operating Pressure* ☐ *Other* ☐

Test Pressure: 1020 Psig *Test Temperature:* 170° F

Component Design Pressure: 1250 Psig *Temperature:* 575° F

9. Remarks: 1) See attached N-2 Code Data Report for the replacement CRD assembly, Serial No A9544.
2) * Pressure test on the CRD bolted flanged connection - Test pressure of 1020 Psig and test temperature of 170° F recorded during ASME Section XI pressure test in accordance with PPM No OSP-RPV-R801 "Reactor Pressure Vessel Leakage Test".

CERTIFICATE OF COMPLIANCE

We certify that the statements made in this Owner's Report are correct and this replacement *conforms to the rules of the ASME Code, Section XI.*
Type Code Symbol Stamp: Not Applicable
Certificate Of Authorization No.: Not Applicable
Expiration Date: Not Applicable

Prepared By Kuldip Singh - Program Lead Engineer (PLE) *Signed By* Kuldip Singh - Program Lead Engineer (PLE)

Date 6/30/05 *Date* 6/30/05

CERTIFICATE OF INSERVICE INSPECTION

I, the undersigned, holding a valid commission issued by the National Board of Boiler and Pressure Vessel Inspectors and the State of Washington *and employed by* Hartford Steam Boiler Of Connecticut of Hartford, Connecticut *have inspected the components described in this Owner's Report during the period* 5-6-2005 *to* 7-8-2005 *and state to the best of my knowledge and belief, the Owner has performed examinations and taken corrective measures described in this Owner's Report in accordance with the requirements of the ASME Code, Section XI.*
By signing this certificate neither the Inspector nor his employer makes any warranty, expressed or implied, concerning the examinations and corrective measures described in this Owner's Report. Furthermore, neither the Inspector nor his employer shall be liable in any manner for any personal injury or property damage or a loss of any kind arising from or connected with this inspection.

Inspector's Signature *Commissions* 10655W A, B, N, I
National Board, State, and Endorsements

Date 7-8-2005

WOT No. 0109165 15

FORM N-2 NPT CERTIFICATE HOLDERS' DATA REPORT FOR NUCLEAR PART AND APPURTENANCES*

As required by the Provision of the ASME Code Rules, Section III, Div. I

6/30/95

1. Manufactured & Certified by : General Electric Company Nuclear Fuel & Components Manufacturing (GE NF & CM

2117 Castle Hayne Road, Wilmington, North Carolina 28401

(Name and Address of NPT Certificate Holder)

(b) Manufactured for : WNP 2 Richland, Washington 99352

(Name and Address of N Certificate Holder for completed nuclear component)

2. Identification - Certificate Holder's S/N of Part : A9544 Nat'l Bd. No. N/A

(a) Constructed According to Drawing No: 919D258G003 Rev 18 Dwg. Prepared by D. L. Peterson

(b) Description of Part Inspected: Cylinder Tube & Flange

(c) Applicable ASME Code: Section III , Edition 1974 , Addenda Date W'75 , Case No. 1361-2 Class 1

3. REMARKS: Standard part for use with Reactor. Hydrostatically tested at 1825 psi. min.

(Brief description of service for which component was designed)

Sheet 1 of 2

We certify that the statements in this report are correct and this vessel part or appurtenance as defined in the code conforms to the rules of construction of the ASME Code Section III. (The applicable Designed Specification and Stress Report are not the responsibility of the NPT Certificate Holder for parts. An NPT Certification Holder for appurtenances is responsible for furnishing a separate Design Specification and Stress Report if the appurtenance is not included in the component Design Specification and Stress Report).

Date: 06/27/95 Signed GE - NEBG - NF & CM - QA By

(NPT Certificate Holder) (SC QA Representive)

Certificate of Authorization Expires: 6/16/96 Certification of Authorization No. : NPT N - 1151

Certification of Design for Appurtenance

Design information on file at GE Company, San Jose, California

Stress analysis report on file at GE Company, San Jose, California

DC22A6253 Rev. 1
Design specification certified by Bjorn Haaberg Prof. Eng. State Calif. Reg. No. 15570

DC22A6254 Rev 1
Stress analysis report certified by Edward Yoshio Prof. Eng. State Calif. Reg. No. M018646

Certification of Shop Inspection

I, the undersigned, holding a valid commission by the National Board of Boiler and Pressure Inspectors and/or the State or Province of North Carolina and employed by Department of Labor of State of North Carolina have inspected the part of a pressure vessel described in this Partial Data Report on 5/16, 1995, and state that to the best of my knowledge and belief, the NPT Certificate Holder has constructed this part in accordance with the ASME Code Section III.
By signing this certificate, neither the Inspector nor his employer makes any warranty, expressed or implied, concerning the part described in the Partial Data Report. Furthermore, neither the Inspector nor his employer shall be liable in any manner for any personal injury or property damages or a loss of any kind arising from or connected with this inspection.

6/27, 1995 Jerome P Ewen NC 1231, Ohio, WC 3686 PA

Date Inspector's Signature National Board, State, Province And No.

*Supplemental sheets in form of lists, sketches or drawing may be used provided (1) size is 8-1/2" x 11", (2) information in 1-2 on this Data Report is included on each sheet, and (3) each sheet is numbered and number of sheets is recorded in Item 3. "REMARKS".

(07/90)

FORM N-2 (back)

Items 4-8 Incl. to be completed for single wall vessels, jackets vessels, or shells of heat exchangers.

4. Shell: Material _____ T.S. _____ Nominal Thickness ___ in. Corrosion Allowance ___ in. Dia. ___ ft. ___ in. Length ___ ft. ___ in.
(Kind & Spec. No.) (Min. of Range Specified)

5. Seams: Long _____ H.T.[1] _____ R.T. _____ Efficiency _____%
Girth _____ H.T.[1] _____ R.T. _____ No. of Courses _____

6. Heads: (a) Material _____ T.S. _____ (b) Material _____ T.S. _____

	Location (Top Bottom, Ends)	Thickness	Crown Radius	Knuckle Radius	Elliptical Ratio	Concial Apex Angle	Hemispherical Radius	Flat Diameter	Side to Press. (conv. or conc.)
(a)									
(b)									

If removable, bolts used _____ (Material, Spec. No., T.S. Size Number) Other fastening _____ (Describe or attach sketch)

7. Jacket Closure: _____
(Describe as ogee and weld, bar, etc. If bar give dimensions, if bolts, describe or sketch)

Drop Weight _____
Charpy Impact _____ ft-lb

8. Design pressure[2] 1250 psi at 575 °F at temp of _____ °F

Items 9 and 10 to be completed for tube sections

9. Tube Sheets: Stationary. Material _____ (Kind & Spec. No.) Dia. _____ (Subject to pressure) Thickness ___ in. Attachment _____ (Welded, Bolted)
Floating. Material _____ Dia. _____ Thickness ___ in. Attachment _____

10. Tubes: Material _____ O.D. _____ in. Thickness _____ inches or gage. Number _____ Type _____ (Str. or U)

Items 11 - 14 incl. to be completed for inner chambers of jacketed vessels, or channels of heat exchangers.

11. Shell: Material _____ T.S. _____ Nominal Thickness ___ in. Corrosion Allowance ___ in. Dia. ___ ft. ___ in. Length ___ ft. ___ in.
(Kind & Spec. No.) (Min. of Range Specified)

12. Seams: Long _____ H.T.[1] _____ R.T. _____ Efficiency _____%
Girth _____ H.T.[1] _____ R.T. _____ No. of Courses _____

13. Heads: (a) Material _____ T.S. _____ (b) Material _____ T.S. _____

	Location	Thickness	Crown Radius	Knuckle Radius	Elliptical Ratio	Concial Apex Angle	Hemispherical Radius	Flat Diameter	Side to Press. (conv. or conc.)
(a)	Top, bottom, ends								
(b)	Channel								

If removable, bolts used (a)_____(b)_____(c)_____ Other fastening _____ (Describe or attach sketch)

Drop Weight _____
Charpy Impact _____ ft-lb

14. Design pressure[2] _____ psi at _____ °F at temp of _____ °F

Items below to be completed for all vessels where applicable.

15. Safety Valve Outlets: Number _____ Size _____ Location _____

16. Nozzles:

Purpose (Inlet, Outlet, Drain)	Number	Dia. or Size	Type	Material	Thickness	Reinforcement Material	How Attached

17. Inspection Openings: Manholes, No. _____ Size _____ Location _____
Handholes, No. _____ Size _____ Location _____
Threaded, No. _____ Size _____ Location _____

18. Supports: Skirt _____ (Yes or No) Lugs _____ (Number) Legs _____ (Number) Other _____ (Describe) Attached _____ (Where & How)

1 - If Postweld Heat-Treated.
2 - List other internal or external pressure with coincident temperature when applicable.

WOT No. 0109165 15

FORM N-2 NPT CERTIFICATE HOLDERS' DATA REPORT FOR NUCLEA. .ART AND APPURTENANCES*

As required by the Provision of the ASME Code Rules, Section III, Div. I

6/30/05

1. Manufactured & Certified by : General Electric Company Nuclear Fuel & Components Manufacturing (GE NF & CM)

   2117 Castle Hayne Road, Wilmington, North Carolina 28401

   (Name and Address of NPT Certificate Holder)

   (b) Manufactured for : WNP 2 Richland, Washington 99352

   (Name and Address of N Certificate Holder for completed nuclear component)

2. Identification - Certificate Holder's S/N of Part : A9544 Nat'l Bd. No. N/A

   (a) Constructed According to Drawing No: 919D258G003 Rev 18 Dwg. Prepared by D. L. Peterson

   (b) Description of Part Inspected: Cylinder Tube & Flange

   (c) Applicable ASME Code: Section III , Edition 1974 , Addenda Date W'75 , Case No. 1361-2 Class 1

3. REMARKS: Standard part for use with Reactor. Hydrostatically tested at 1825 psi. min.

   (Brief description of service for which component was designed)

1. Cap 166B9274P001
   SA182 - F316
   3/8" thick x 1 1/16" OD

2. Indicator Tube 167B4908P001
   SA312 - TP316
   3/4" sch 40 - seamless pipe
   0.113" wall thickness
   1.065" max. dia.

3. Plug 159A1176P001
   SA182 - F304
   1/4" thick x 0.812" OD

4. Flange 919D610P001 (719E474)
   SA182 - F304
   3.37" thick x 9 5/8" OD

5. Head 129B3539P005
   SA182 - F304
   7/8" thick x 2.875" dia.

6. Ring Flange 114B5122P002
   SA182 - F304
   1" thick x 5.0" OD x 1.75" ID

7. Cap Screw 117C4516P002
   SA193 - B6
   6 ea. 1/2" dia. on 4 1/8" bolt circle

8. Plug 175A7961P001
   SA182 - F304
   0.38" thick x 1.307" dia.

9. Nut 114B5460P001
   XM - 19 SA479
   1.30" thick x 2.62" dia.

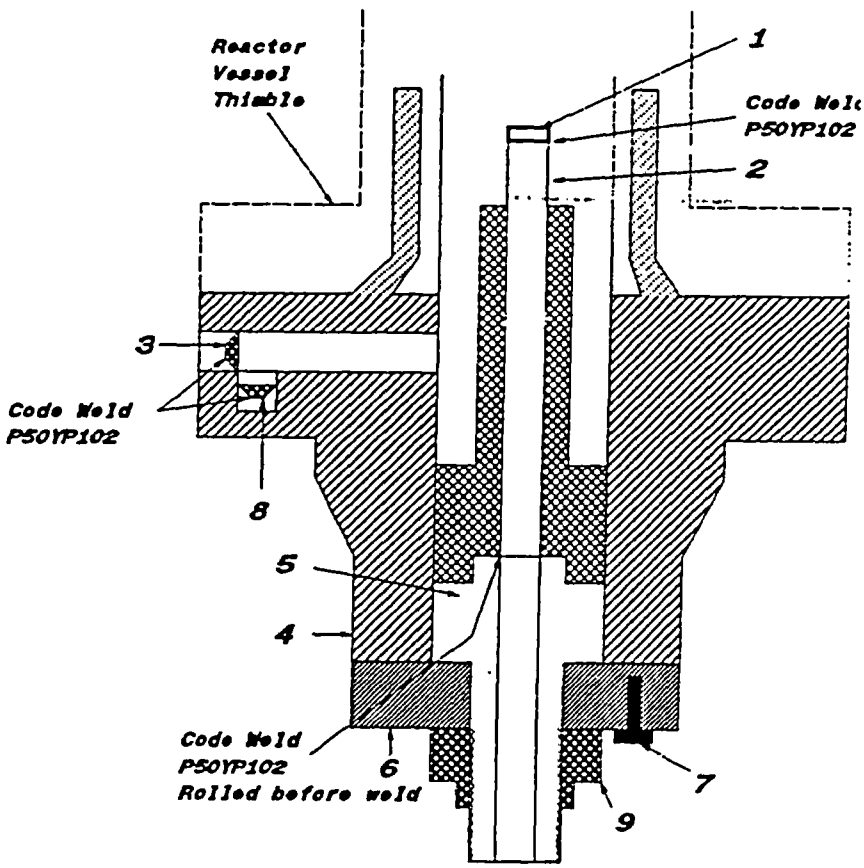

WOT No 01090165 16

ENERGY NORTHWEST
People·Vision·Solutions

FORM NIS-2 OWNER'S REPORT FOR REPAIRS OR REPLACEMENTS
As Required By The Provisions Of The ASME Code Section XI

1. Owner: Energy Northwest
Address: Columbia Generating Station, North Power Plant Loop, Richland, Washington, 99352
2. Plant: Columbia Generating Station
Address: Columbia Generating Station, North Power Plant Loop, Richland, Washington, 99352

Date: 06/29/05
Sheet: 1 Of 1
Unit: Not Applicable

3. (a) Work Performed By: Energy Northwest
(b) Repair Organization P.O. No, Job No, etc.: Energy Northwest
(c) Type Code Symbol Stamp: Not Applicable
(d) Certificate Of Authorization No.: Not Applicable
(e) Expiration Date: Not Applicable
4. Identification Of System: Control Rod Drive (CRD) System
5. (a) Applicable Construction Code: ASME Section III, Code Class 1, 1974 Edition with Winter 1975 Addenda, Code Case: 1361-2
(b) Applicable Edition Of ASME Section XI Utilized For Repairs Or Replacements: 1989 Edition with no Addenda, Code Case: None
6. Identification Of Components Repaired Or Replaced And Replacement Components

Name Of Component	Name Of Manufacturer	Manufacturer's Serial No	National Board No	Other I.D.	Year Built	Repaired, Replaced Or Replacement	ASME Code Stamped (Yes Or No) Code Class
CRD	GE	A8710	N/A	N/A	1988	Replaced	Yes, Code Class 1
CRD	GE	A9452	N/A	N/A	1995	Replacement	Yes, Code Class 1

7. Description Of Work Performed: Replaced Control Rod Drive (CRD) assembly at Core Location 30-07. The replacement work was performed in accordance with plant procedure PPM No 10.5.7 "Control Rod Drive Removal And Replacement" as follows:

1) Removed all eight (8) existing cap screws from the CRD assembly bolted flanged connection.
2) Removed existing CRD assembly, Serial No A8710.
3) Performed VT-1 visual examination on all eight (8) new replacement cap screws. VT-1 visual examination results acceptable.
4) Installed replacement CRD assembly, Serial No A9452.
5) Installed eight (8) VT-1 visually examined new replacement cap screws for the CRD assembly bolted flanged connection.
6) Torqued the cap screws for the CRD assembly bolted flanged connection to the required torque values.
7) Performed VT-2 visual examination during pressure test on CRD assembly bolted flanged connection to confirm pressure boundary integrity of the joint. No leakage was observed during pressure test.

NOTES -

1) The replacement CRD assembly, Serial No A9452 is certified to comply with ASME Section III, Code Class 1, 1974 Edition with Winter 1975 Addenda requirements.
2) New replacement cap screws, SA-540 Gr. B23, Class 4, Heat No 14813.
3) VT-1 visual examination Report No 2RPV-020 for the new replacement cap screws.

WOT No 01090165 16

ENERGY NORTHWEST
People·Vision·Solutions

FORM NIS-2 OWNER'S REPORT FOR REPAIRS OR REPLACEMENTS (Back)

8 Tests Conducted: Hydrostatic ☐ **Pneumatic** ☐ **Nominal Operating Pressure** ☐ **Other** ☒

Test Pressure: 1020 Psig **Test Temperature:** 170° F
Component Design Pressure: 1250 Psig **Temperature:** 575° F

9. Remarks: 1) See attached N-2 Code Data Report for the replacement CRD assembly, Serial No A9452.
2) * Pressure test on the CRD bolted flanged connection - Test pressure of 1020 Psig and test temperature of 170° F recorded during ASME Section XI pressure test in accordance with PPM No OSP-RPV-R801 "Reactor Pressure Vessel Leakage Test".

CERTIFICATE OF COMPLIANCE

We certify that the statements made in this Owner's Report are correct and this replacement *conforms to the rules of the ASME Code, Section XI.*
Type Code Symbol Stamp: Not Applicable
Certificate Of Authorization No.: Not Applicable
Expiration Date: Not Applicable

Prepared By Kuldip Singh - Program Lead Engineer (PLE) *Signed By* Kuldip Singh - Program Lead Engineer (PLE)

Date 6/30/05 *Date* 6/30/05

CERTIFICATE OF INSERVICE INSPECTION

I, the undersigned, holding a valid commission issued by the National Board of Boiler and Pressure Vessel Inspectors and the State of Washington *and employed by* Hartford Steam Boiler Of Connecticut of Hartford, Connecticut *have inspected the components described in this Owner's Report during the period* 5-6-2005 *to* 7-8-2005 *and state to the best of my knowledge and belief, the Owner has performed examinations and taken corrective measures described in this Owner's Report in accordance with the requirements of the ASME Code, Section XI.*
By signing this certificate neither the Inspector nor his employer makes any warranty, expressed or implied, concerning the examinations and corrective measures described in this Owner's Report. Furthermore, neither the Inspector nor his employer shall be liable in any manner for any personal injury or property damage or a loss of any kind arising from or connected with this inspection.

Inspector's Signature *Commissions* 10655W A, B, N, I
National Board, State, and Endorsements

Date 7-8-2005

WOT No. 0109165 16

FORM N-2 NPT CERTIFICATE HOLDERS' DATA REPORT FOR NUCLEAR PART AND APPURTENANCES*

As required by the Provision of the ASME Code Rules, Section III, Div. I

6/30/05

1. Manufactured & Certified by : General Electric Company Nuclear Fuel & Components Manufacturing (GE NF & CM)

   2117 Castle Hayne Road, Wilmington, North Carolina 28401

   (Name and Address of NPT Certificate Holder)

   (b) Manufactured for : WNP 2 Richland, Washington 99352

   (Name and Address of N Certificate Holder for completed nuclear component)

2. Identification - Certificate Holder's S/N of Part : A9452 Nat'l Bd. No. N/A

   (a) Constructed According to Drawing No: 919D258G003 Rev 19 Dwg. Prepared by D. L. Peterson

   (b) Description of Part Inspected: Cylinder Tube & Flange

   (c) Applicable ASME Code: Section III , Edition 1974 , Addenda Date W'75 , Case No. 1361-2 Class 1

3. REMARKS: Standard part for use with Reactor, Hydrostatically tested at 1825 psi. min.

   (Brief description of service for which component was designed)

Sheet 1 of 2

We certify that the statements in this report are correct and this vessel part or appurtenance as defined in the code conforms to the rules of construction of the ASME Code Section III. (The applicable Designed Specification and Stress Report are not the responsibility of the NPT Certificate Holder for parts. An NPT Certification Holder for appurtenances is responsible for furnishing a separate Design Specification and Stress Report if the appurtenance is not included in the component Design Specification and Stress Report).

Date: 06/27/95 Signed GE - NEBG - NF & CM - QA By

(NPT Certificate Holder) (SC QA Representive)

Certificate of Authorization Expires: 6/16/96 Certification of Authorization No. : NPT N - 1151

Certification of Design for Appurtenance

Design information on file at GE Company, San Jose, California

Stress analysis report on file at GE Company, San Jose, California

DC22A6253 Rev. 1
Design specification certified by Bjorn Haaberg Prof. Eng. State Calif. Reg. No. 15570

DC22A6254 Rev 1
Stress analysis report certified by Edward Yoshio Prof. Eng. State Calif. Reg. No. M018646

Certification of Shop Inspection

I, the undersigned, holding a valid commission by the National Board of Boiler and Pressure Inspectors and/or the State or Province of North Carolina and employed by Department of Labor of State of North Carolina have inspected the part of a pressure vessel described in this Partial Data Report on 5/16, 1995, and state that to the best of my knowledge and belief, the NPT Certificate Holder has constructed this part in accordance with the ASME Code Section III.
By signing this certificate, neither the Inspector nor his employer makes any warranty, expressed or implied, concerning the part described in the Partial Data Report. Furthermore, neither the Inspector nor his employer shall be liable in any manner for any personal injury or property damages or a loss of any kind arising from or connected with this inspection.

6/27, 1995 Jerome P Ewers NC 1231, Ohio, WC 3686 PA

Date Inspector's Signature National Board, State, Province And No.

*Supplemental sheets in form of lists, sketches or drawing may be used provided (1) size is 8-1/2" x 11", (2) information in 1-2 on this Data Report is included on each sheet, and (3) each sheet is numbered and number of sheets is recorded in Item 3. "REMARKS".

(07/90)

FORM N-2 (back)

Items 4-8 Incl. to be completed for single wall vessels, jackets vessels, or shells of heat exchangers.

4. Shell: Material _____ T.S. _____ Nominal Thickness ___ in. Corrosion Allowance ___ in. Dia. ___ ft. ___ in. Length ___ ft. ___ i
(Kind & Spec. No.) (Min. of Range Specified)

5. Seams: Long _____ H.T.[1] _____ R.T. _____ Efficiency _____%
Girth _____ H.T.[1] _____ R.T. _____ No. of Courses _____

6. Heads: (a) Material _____ T.S. _____ (b) Material _____ T.S. _____

	Location (Top Bottom, Ends)	Thickness	Crown Radius	Knuckle Radius	Elliptical Ratio	Concial Apex Angle	Hemispherical Radius	Flat Diameter	Side to Press. (conv. or conc.)
(a)									
(b)									

If removable, bolts used _____ (Material, Spec. No., T.S. Size Number) Other fastening _____ (Describe or attach sketch)

7. Jacket Closure: _____
(Describe as ogee and weld, bar, etc. If bar give dimensions, if bolts, describe or sketch)

Drop Weight _____
Charpy Impact _____ ft-lb

8. Design pressure[2] _____1250_____ psi at _____575_____ °F at temp of _____ °F

Items 9 and 10 to be completed for tube sections

9. Tube Sheets: Stationary. Material _____ (Kind & Spec. No.) Dia. _____ (Subject to pressure) Thickness ___ in. Attachment _____ (Welded, Bolted)
Floating. Material _____ Dia. _____ Thickness ___ in. Attachment _____

10. Tubes: Material _____ O.D. _____ in. Thickness _____ inches or gage. Number _____ Type _____ (Str. or U)

Items 11 - 14 incl. to be completed for inner chambers of jacketed vessels, or channels of heat exchangers.

11. Shell: Material _____ T.S. _____ Nominal Thickness ___ in. Corrosion Allowance ___ in. Dia. ___ ft. ___ in. Length ___ ft. ___ in
(Kind & Spec. No.) (Min. of Range Specified)

12. Seams: Long _____ H.T.[1] _____ R.T. _____ Efficiency _____%
Girth _____ H.T.[1] _____ R.T. _____ No. of Courses _____

13. Heads: (a) Material _____ T.S. _____ (b) Material _____ T.S. _____

	Location	Thickness	Crown Radius	Knuckle Radius	Elliptical Ratio	Concial Apex Angle	Hemispherical Radius	Flat Diameter	Side to Press. (conv. or conc.)
(a)	Top, bottom, ends								
(b)	Channel								

If removable, bolts used (a)_____(b)_____(c)_____ Other fastening _____ (Describe or attach sketch)

Drop Weight _____
Charpy Impact _____ ft-lb

14. Design pressure[2] _____ psi at _____ °F at temp of _____ °F

Items below to be completed for all vessels where applicable.

15. Safety Valve Outlets: Number _____ Size _____ Location _____

16. Nozzles:

Purpose (Inlet, Outlet, Drain)	Number	Dia. or Size	Type	Material	Thickness	Reinforcement Material	How Attached

17. Inspection Openings: Manholes, No. _____ Size _____ Location _____
Handholes, No. _____ Size _____ Location _____
Threaded, No. _____ Size _____ Location _____

18. Supports: Skirt _____ (Yes or No) Lugs _____ (Number) Legs _____ (Number) Other _____ (Describe) Attached _____ (Where & How)

1 - If Postweld Heat-Treated.
2 - List other internal or external pressure with coincident temperature when applicable.

WO# NO. 01091651 6

FORM N-2 NPT CERTIFICATE HOLDERS' DATA REPORT FOR NUCLEAR PARTS AND APPURTENANCES*

As required by the Provision of the ASME Code Rules, Section III, Div. I

6/30/05

1. Manufactured & Certified by : General Electric Company Nuclear Fuel & Components Manufacturing (GE NF & CM)

2117 Castle Hayne Road, Wilmington, North Carolina 28401

(Name and Address of NPT Certificate Holder)

(b) Manufactured for : WNP 2 Richland, Washington 99352

(Name and Address of N Certificate Holder for completed nuclear component)

2. Identification - Certificate Holder's S/N of Part : A9452 Nat'l Bd. No. N/A

(a) Constructed According to Drawing No: 919D258G003 Rev 19 Dwg. Prepared by D. L. Peterson

(b) Description of Part Inspected: Cylinder Tube & Flange

(c) Applicable ASME Code: Section III , Edition 1974 , Addenda Date W'75 , Case No. 1361-2 Class 1

3. REMARKS: Standard part for use with Reactor. Hydrostatically tested at 1825 psi. min.

(Brief description of service for which component was designed)

Sheet 2 of 2

1. Cap 166B9274P001
   SA182 - F316
   3/8" thick x 1 1/16" OD

2. Indicator Tube 167B4908P001
   SA312 - TP316
   3/4" sch 40 - seamless pipe
   0.113" wall thickness
   1.065" max. dia.

3. Plug 159A1176P001
   SA182 - F304
   1/4" thick x 0.812" OD

4. Flange 919D610P001 (719E474)
   SA182 - F304
   3.37" thick x 9 5/8" OD

5. Head 129B3539P005
   SA182 - F304
   7/8" thick x 2.875" dia.

6. Ring Flange 114B5122P002
   SA182 - F304
   1" thick x 5.0" OD x 1.75" ID

7. Cap Screw 117C4516P002
   SA193 - B6
   6 ea. 1/2" dia. on 4 1/8" bolt circle

8. Plug 175A7961P001
   SA182 - F304
   0.38" thick x 1.307" dia.

9. Nut 114B5460P001
   XM - 19 SA479
   1.30" thick x 2.62" dia.

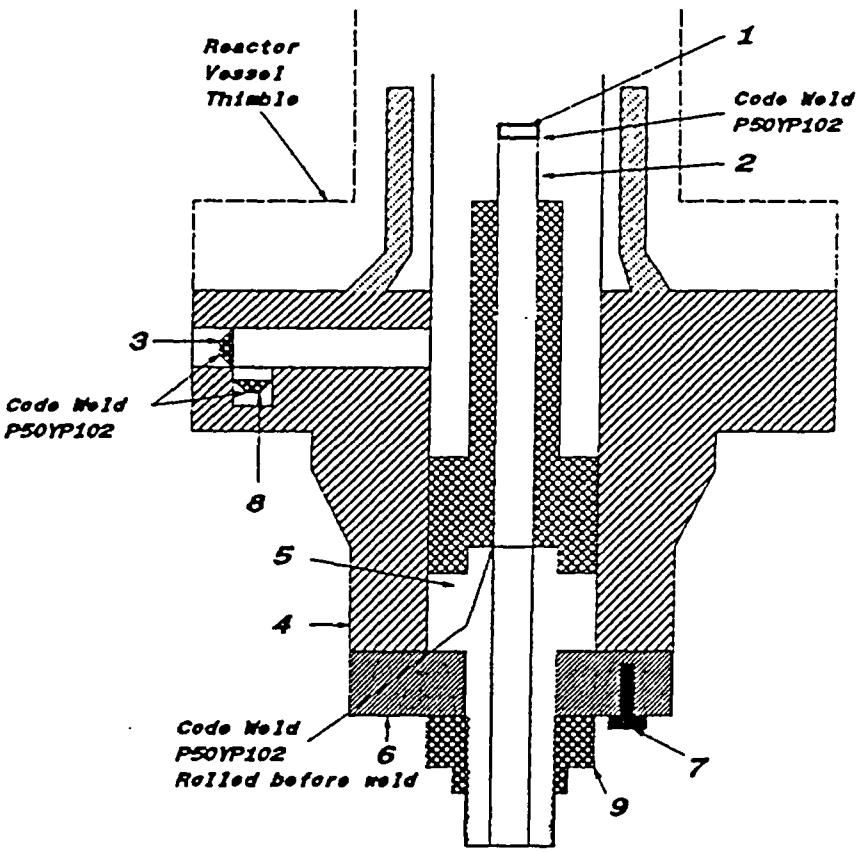

WOT No 01090165 17

ENERGY NORTHWEST
People·Vision·Solutions

FORM NIS-2 OWNER'S REPORT FOR REPAIRS OR REPLACEMENTS
As Required By The Provisions Of The ASME Code Section XI

1. Owner: Energy Northwest
Address: Columbia Generating Station, North Power Plant Loop, Richland, Washington, 99352
2. Plant: Columbia Generating Station
Address: Columbia Generating Station, North Power Plant Loop, Richland, Washington, 99352

Date: 06/29/05
Sheet: 1 Of 1
Unit: Not Applicable

3. (a) Work Performed By: Energy Northwest
(b) Repair Organization P.O. No, Job No, etc.: Energy Northwest
(c) Type Code Symbol Stamp: Not Applicable
(d) Certificate Of Authorization No.: Not Applicable
(e) Expiration Date: Not Applicable
4. Identification Of System: Control Rod Drive (CRD) System
5. (a) Applicable Construction Code: ASME Section III, Code Class 1, 1974 Edition with Winter 1975 Addenda, Code Case: 1361-2
(b) Applicable Edition Of ASME Section XI Utilized For Repairs Or Replacements: 1989 Edition with no Addenda, Code Case: None
6. Identification Of Components Repaired Or Replaced And Replacement Components

Name Of Component	Name Of Manufacturer	Manufacturer's Serial No	National Board No	Other I.D.	Year Built	Repaired, Replaced Or Replacement	ASME Code Stamped (Yes Or No) Code Class
CRD	GE	6158	N/A	N/A	1974	Replaced	Yes, Code Class 1
CRD	GE	A8713	N/A	N/A	1988	Replacement	Yes, Code Class 1

7. Description Of Work Performed: Replaced Control Rod Drive (CRD) assembly at Core Location 30-35. The replacement work was performed in accordance with plant procedure PPM No 10.5.7 "Control Rod Drive Removal And Replacement" as follows:

1) Removed all eight (8) existing cap screws from the CRD assembly bolted flanged connection.
2) Removed existing CRD assembly, Serial No 6158.
3) Performed VT-1 visual examination on all eight (8) new replacement cap screws. VT-1 visual examination results acceptable.
4) Installed replacement CRD assembly, Serial No A8713.
5) Installed eight (8) VT-1 visually examined new replacement cap screws for the CRD assembly bolted flanged connection.
6) Torqued the cap screws for the CRD assembly bolted flanged connection to the required torque values.
7) Performed VT-2 visual examination during pressure test on CRD assembly bolted flanged connection to confirm pressure boundary integrity of the joint. No leakage was observed during pressure test.

NOTES -

1) The replacement CRD assembly, Serial No A8713 is certified to comply with ASME Section III, Code Class 1, 1974 Edition with Winter 1975 Addenda requirements.
2) New replacement cap screws, SA-540 Gr. B23, Class 4, Heat No 14813.
3) VT-1 visual examination Report No 2RPV-020 for the new replacement cap screws.

WOT No 01090165 17

ENERGY NORTHWEST
People·Vision·Solutions

FORM NIS-2 OWNER'S REPORT FOR REPAIRS OR REPLACEMENTS (Back)

8 Tests Conducted: Hydrostatic ☐ *Pneumatic* ☐ *Nominal Operating Pressure* ☐ *Other* ☐

Test Pressure: 1020 Psig *Test Temperature:* 170° F

Component Design Pressure: 1250 Psig *Temperature:* 575° F

9. Remarks: 1) See attached N-2 Code Data Report for the replacement CRD assembly, Serial No A8713.
2) * Pressure test on the CRD bolted flanged connection - Test pressure of 1020 Psig and test temperature of 170° F recorded during ASME Section XI pressure test in accordance with PPM No OSP-RPV-R801 "Reactor Pressure Vessel Leakage Test".

CERTIFICATE OF COMPLIANCE

We certify that the statements made in this Owner's Report are correct and this replacement *conforms to the rules of the ASME Code, Section XI.*
Type Code Symbol Stamp: Not Applicable
Certificate Of Authorization No.: Not Applicable
Expiration Date: Not Applicable

Prepared By Kuldip Singh - Program Lead Engineer (PLE) *Signed By* Kuldip Singh - Program Lead Engineer (PLE)

Date 6/30/05 *Date* 6/30/05

CERTIFICATE OF INSERVICE INSPECTION

I, the undersigned, holding a valid commission issued by the National Board of Boiler and Pressure Vessel Inspectors and the State of Washington *and employed by* Hartford Steam Boiler Of Connecticut of Hartford, Connecticut *have inspected the components described in this Owner's Report during the period* 5-16-2005 *to* 7-8-2005 *and state to the best of my knowledge and belief, the Owner has performed examinations and taken corrective measures described in this Owner's Report in accordance with the requirements of the ASME Code, Section XI.*
By signing this certificate neither the Inspector nor his employer makes any warranty, expressed or implied, concerning the examinations and corrective measures described in this Owner's Report. Furthermore, neither the Inspector nor his employer shall be liable in any manner for any personal injury or property damage or a loss of any kind arising from or connected with this inspection.

Inspector's Signature *Commissions* 1016550 A, B, N, I
National Board, State, and Endorsements

Date 7-8-2005

WOT No. 01090165 17

6/30/05

FORM N-2 NPT CERTIFICATE HOLDERS' DATA REPORT FOR NUCLEAR PART AND APPURTENANCES*
As required by the Provision of the ASME Code Rules, Section III, Div. 1

1. Manufactured & Certified by: GE Company, 2117 Castle Hayne Rd., Wilmington, N.C. 28402
(Name and Address of NPT Certificate Holder)

(b) Manufactured for: WNP-2, RICHLAND, Wa. 99352
(Name and Address of N Certificate Holder for completed nuclear component)

2. Identification-Certificate Holders's S/N of Part: A8713 Nat'l Bd. No. N/A

(a) Constructed According to Drawing No: 919D258G003 Dwg. Prepared by D. L. Peterson

(b) Description of Part Inspected: CYLINDER TUBE & FLANGE

(c) Applicable ASME Code: Section III, Edition 1974, Addenda Date W'75 Case No. 1361-2 Class 1

3. REMARKS: Sub-assembly of Control Rod Drive for use with reactor.
(Brief description of service for which component was designed)
Hydrostatically tested at 1825 psi. min.

*Sheet 1 of 2

We certify that the statements in this report are correct and this vessel part or appurtenance as defined in the code conforms to the rules of construction of the ASME Code Section III. (The applicable Designed Specification and Stress Report are not the responsibility of the NPT Certificate Holder for parts. An NPT Certification Holder for appurtenances is responsible for furnishing a separate Design Specification and Stress Report if the appurtenance is not included in the component Design Specification and Stress Report).

DATE: 12/31, 19 88 Signed GE-NEBG-NF&CM-QA By
(NPT Certificate Holder)

Certificate Of Authorization Expires: 6/16/90 Certification of Authorization No.: NPT N-1151

CERTIFICATION OF DESIGN FOR APPURTENANCE

Design information on file at GE COMPANY, SAN JOSE, CALIFORNIA

Stress analysis report on file at GE COMPANY, SAN JOSE, CALIFORNIA
DC22A6253 Rev. 0
Design specification certified by BJORN HAABERG Prof. Eng. State CALIF. Reg. No. 15570
DC22A6254 Rev. 0.
Stress analysis report certified by EDWARD YOSHIO Prof. Eng. State CALIF. Reg. No. M018646

CERTIFICATION OF SHOP INSPECTION

I, the undersigned, holding a valid commission by the National Board of Boiler and Pressure Inspectors and/or the State or Province of NORTH CAROLINA and employed by DEPARTMENT OF LABOR of STATE OF NORTH CAROLINA have inspected the part of a pressure vessel described in this Partial Data Report on 12-31 1988, and state that to the best of my knowledge and belief, the NPT Certificate Holder has constructed this part in accordance with the ASME Code Section III.

By signing this certificate, neither the Inspector nor his employer makes any warranty, expressed or implied, concerning the part described in the Partial Data Report. Furthermore, neither the Inspector nor his employer shall be liable in any manner for any personal injury or property damages or a loss of any kind arising from or connected with this inspection.

12-31, 19 88 — DATE
Inspector's Signature
NC 779, PA WC2L60, OHW — National Board, State, Province and No.

*Supplemental sheets in form of lists, sketches or drawing may be used provided (1) size is 8-1/2" X 11", (2) information in 1-2 on this Data Report is included on each sheet, and (3) each sheet is numbered and number of sheets is recorded in Item 3. "REMARKS"

(10/77)

VERIFIED & ACCEPTED
1-18-89
R.I. Inspector Date

FORM M-2 (back)

Items 4-8 Incl. to be completed for single wall vessels, jackets vessels, or shells of heat exchangers.

4. Shell: Material_____ T.S._____ Nominal Thickness___in. Corrosion Allowance___in Dia.___ft.___in. Length___ft.___in.
(Kind & Spec.No) (Min.ofRange Specified)

5. Seams: Long_____ H.T.[1]_____ R.T._____ Efficiency_____%

Girth_____ H.T.[1]_____ R.T._____ No. of Courses_____

6. Heads: (a) Material_____ T.S._____ (b)Material_____ T.S._____

Location (Top Bottom,Ends)	Thickness	Crown Radius	Knuckle Radius	Elliptical Ratio	Concial Apex Angle	Hemispherical Radius	Flat Diameter	Side to Press. (conv.or conc.)
(a)_____	_____	_____	_____	_____	_____	_____	_____	_____
(b)_____	_____	_____	_____	_____	_____	_____	_____	_____

If removable, bolts used_____ Other fastening_____
(Material,Spec.No., T.S. Size Number) (Describe or attach sketch)

7. Jacket Closure:_____
(Describe as ogee and weld,bar,etc. If bar give dimensions, if bolts, describe or shetch)

8. Design Pressure [2] 1250 psi at 575 °F Drop Weight_____ Charpy Impact_____ ft-lb at temp. of_____ °f

Items 9 and 10 to be completed for tube sections.

9. Tube Sheets: Stationary Mat'l._____ Dia._____ Thickness__in. Attachment_____
(Kind of Spec. No.) (Subj.to Press.) (Welded, Bolted)
Floating. Material _____ Dia._____ Thickness___in. Attachment_____

10. Tubes: Material_____ O.D.____in. Thickness_____ inches or gage. Number____ Type_____
(Str. or U)

Items 11-14 incl. to be completed for inner chambers of jacketed vessels, or channels of heat exchangers

11. Shell: Material____ T.S.____ Nominal Thickness___in. Corrosion Allowance___in. Dia.___ft.___in___Length___ft.___in.
(Kind&Spec.No.) (Min.ofRange Specified)

12. Seams: Long_____ H.T.[1]_____ R.T._____ Efficiency_____%
Girth_____ H.T.[1]_____ R.T._____ No. of Courses_____

13. Heads (a) Material_____ T.S._____ (b)Material_____ T.S._____

Location (a)Top, Bottom, End	Ticnkess	Crown Radius	Knucle Radius	Elliptical Ratio	Concial Apex Angle	Hemispherical Radius	Fat Diameter	Side to Press (Conv.or Conc.)
	_____	_____	_____	_____	_____	_____	_____	_____
(b)Channel	_____	_____	_____	_____	_____	_____	_____	_____

If removable, bolts used (a)_____ (b)_____ (c)_____ Other Fastening_____
(Describe or attach sketch

14. Design pressure[2]_____ psi at_____ °F Drop Weight_____, Charpy Impact_____ ft-lb at temp. of _____ °F

Items below to be completed for all vessels where applicable.

15. Safety Valve Outlets: Number_____ Size_____ Location_____

16. Nozzles:

Purpose (Inlet Outlet, Drain)	Number	Dia or Size	Type	Material	Thickness	Reinforcement Material	Attached
_____	_____	_____	_____	_____	_____	_____	_____
_____	_____	_____	_____	_____	_____	_____	_____

17. Inspection Openings: Manholes, No._____ Size_____ Location_____
Handles, No._____ Size_____ Location_____
Threaded, No._____ Size_____ Location_____

18. Supports: Shirt_____ Lugs_____ Legs_____ Other_____ Attached_____
(Yes or No) (Number) (Number) (Describe) (Where & How)

[1] If Postweld Heat-Treated.

[2] List other internal or external pressure with conincident temperature when applicalbe.

WOT No. 0109165 17

FORM N-2 NPT CERTIFICATE HOLDERS' DATA REPORT FOR NUCLEAR PART AND APPURTENANCES*
As required by the Provision of the ASME Code Rules, Section III, Div. I 6/30/05

1. Manufactured & Certified by: GE Company, 2117 Castle Hayne Rd., Wilmington, N.C. 28402
(Name and Address of NPT Certificate Holder)

(b) Manufactured for: WNP-2, RICHLAND, Wa. 99352
(Name and Address of N Certificate Holder for completed nuclear component)

2. Identification-Certificate Holders's S/N of Part: A8713 Nat'l Bd. N. N/A

(a) Constructed According to Drawing No: 919D258G003 Dwg. Prepared by D. L. Peterson

(b) Description of Part Inspected: CYLINDER TUBE & FLANGE

(C) Applicable ASME Code: Section III, Edition 1974, Addenda Date W'75, Case No. 1361-2 Class 1

. REMARKS: Sub-assembly of Control Rod Drive for use with reactor.
(Brief description of service for which component was designed)
Hydrostatically tested at 1825 psi. min.

*Sheet 2 of 2

1. Cap 167A2343P1
SA182-F304
3/8 thick X 1 1/16 OD

2. Indicator Tube 104B1336P3
SA312-TP316
3/4 sch 40-seamless pipe
0.113 wall thickness
1.065 max. dia.

3. Plug 159A1176P1
SA182-F304
1/4 thick x 0.812 OD

4. Flange 919D610P1 (719E474)
SA182-F304
3.37 thick x 9 5/8 OD

5. Head 129B3539P3, P5
SA182-F304
7/8 thick x 2.875 Dia.

6. Ring Flange 114B5122P2
SA182-F304
1" thick x 5.0 OD x 1.75 ID

7. Cap Screw 117C4516P2
SA193-B6
6 ea. 1/2 dia. on 4 1/8 bolt circle

8. Plug 175A7961P1
SA182-F304
0.38 thick x 1.307 dia.

9. Nut 114B5460P1
SA193-B8A
1.30 thick x 2.62 dia.

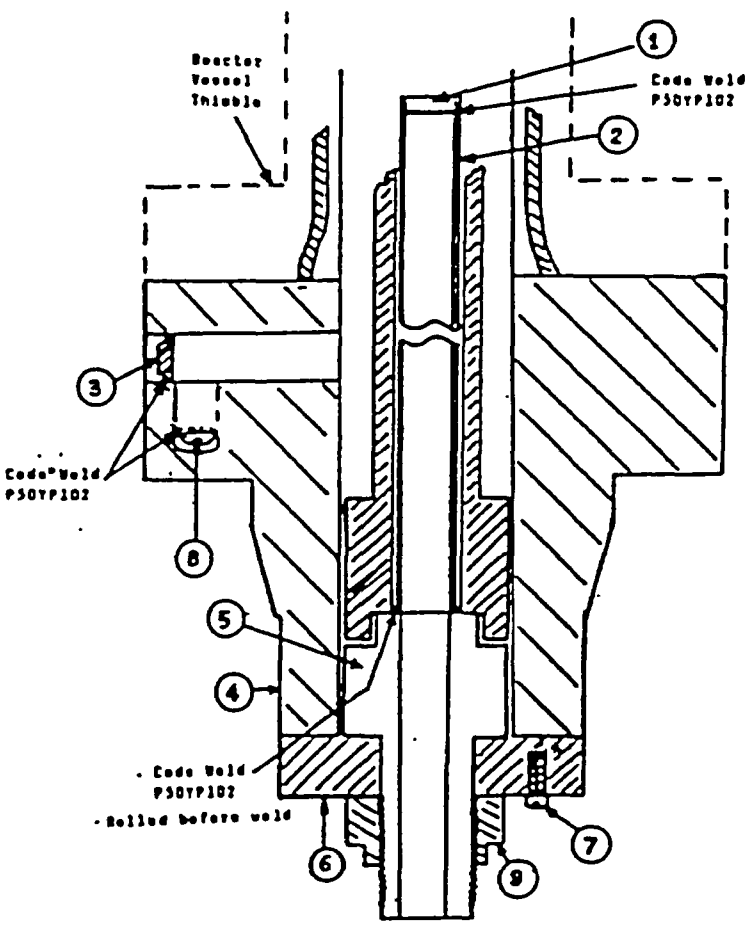

WOT No 01090165 18

ENERGY NORTHWEST
People·Vision·Solutions

FORM NIS-2 OWNER'S REPORT FOR REPAIRS OR REPLACEMENTS
As Required By The Provisions Of The ASME Code Section XI

Date: 06/29/05
Sheet: 1 Of 1
Unit: Not Applicable

1. **Owner:** Energy Northwest
   Address: Columbia Generating Station, North Power Plant Loop, Richland, Washington, 99352
2. **Plant:** Columbia Generating Station
   Address: Columbia Generating Station, North Power Plant Loop, Richland, Washington, 99352
3. **(a) Work Performed By:** Energy Northwest
   (b) Repair Organization P.O. No, Job No, etc.: Energy Northwest
   (c) Type Code Symbol Stamp: Not Applicable
   (d) Certificate Of Authorization No.: Not Applicable
   (e) Expiration Date: Not Applicable
4. **Identification Of System:** Control Rod Drive (CRD) System
5. **(a) Applicable Construction Code:** ASME Section III, Code Class 1, 1974 Edition with Winter 1975 Addenda, Code Case: 1361-2
   (b) Applicable Edition Of ASME Section XI Utilized For Repairs Or Replacements: 1989 Edition with no Addenda, Code Case: None
6. **Identification Of Components Repaired Or Replaced And Replacement Components**

Name Of Component	Name Of Manufacturer	Manufacturer's Serial No	National Board No	Other I.D.	Year Built	Repaired, Replaced Or Replacement	ASME Code Stamped (Yes Or No) Code Class
CRD	GE	6433	N/A	N/A	1974	Replaced	Yes, Code Class 1
CRD	GE	A9401	N/A	N/A	1995	Replacement	Yes, Code Class 1

7. **Description Of Work Performed:** Replaced Control Rod Drive (CRD) assembly at Core Location 30-47. The replacement work was performed in accordance with plant procedure PPM No 10.5.7 "Control Rod Drive Removal And Replacement" as follows:

1) Removed all eight (8) existing cap screws from the CRD assembly bolted flanged connection.
2) Removed existing CRD assembly, Serial No 6433.
3) Performed VT-1 visual examination on all eight (8) new replacement cap screws. VT-1 visual examination results acceptable.
4) Installed replacement CRD assembly, Serial No A9401.
5) Installed eight (8) VT-1 visually examined new replacement cap screws for the CRD assembly bolted flanged connection.
6) Torqued the cap screws for the CRD assembly bolted flanged connection to the required torque values.
7) Performed VT-2 visual examination during pressure test on CRD assembly bolted flanged connection to confirm pressure boundary integrity of the joint. No leakage was observed during pressure test.

NOTES -

1) The replacement CRD assembly, Serial No A9401 is certified to comply with ASME Section III, Code Class 1, 1974 Edition with Winter 1975 Addenda requirements.
2) New replacement cap screws, SA-540 Gr. B23, Class 4, Heat No 14813.
3) VT-1 visual examination Report No 2RPV-020 for the new replacement cap screws.

WOT No 01090165 18

ENERGY NORTHWEST
People·Vision·Solutions

FORM NIS-2 OWNER'S REPORT FOR REPAIRS OR REPLACEMENTS (Back)

8 Tests Conducted: Hydrostatic ☐ *Pneumatic* ☐ *Nominal Operating Pressure* ☐ *Other* ☐ *

Test Pressure: 1020 Psig *Test Temperature:* 170° F

Component Design Pressure: 1250 Psig *Temperature:* 575° F

9. Remarks: 1) See attached N-2 Code Data Report for the replacement CRD assembly, Serial No A9401.
2) * Pressure test on the CRD bolted flanged connection - Test pressure of 1020 Psig and test temperature of 170° F recorded during ASME Section XI pressure test in accordance with PPM No OSP-RPV-R801 "Reactor Pressure Vessel Leakage Test".

CERTIFICATE OF COMPLIANCE

We certify that the statements made in this Owner's Report are correct and this replacement *conforms to the rules of the ASME Code, Section XI.*
Type Code Symbol Stamp: Not Applicable
Certificate Of Authorization No.: Not Applicable
Expiration Date: Not Applicable

Prepared By Kuldip Singh *Signed By* Kuldip Singh
Kuldip Singh - Program Lead Engineer (PLE) Kuldip Singh - Program Lead Engineer (PLE)

Date 6/30/05 *Date* 6/30/05

CERTIFICATE OF INSERVICE INSPECTION

I, the undersigned, holding a valid commission issued by the National Board of Boiler and Pressure Vessel Inspectors and the State of Washington *and employed by* Hartford Steam Boiler Of Connecticut of Hartford, Connecticut *have inspected the components described in this Owner's Report during the period* 5-6-2005 *to* 7-8-2005 *and state to the best of my knowledge and belief, the Owner has performed examinations and taken corrective measures described in this Owner's Report in accordance with the requirements of the ASME Code, Section XI.*
By signing this certificate neither the Inspector nor his employer makes any warranty, expressed or implied, concerning the examinations and corrective measures described in this Owner's Report. Furthermore, neither the Inspector nor his employer shall be liable in any manner for any personal injury or property damage or a loss of any kind arising from or connected with this inspection.

Inspector's Signature *Commissions* 10655W A, B, N, E
National Board, State, and Endorsements

Date 7-8-2005

WOT No. 0109165 18

FORM N-2 NPT CERTIFICATE HOLDERS' DATA REPORT FOR NUCLEAR PART AND APPURTENANCES*

As required by the Provision of the ASME Code Rules, Section III, Div. I

6/30/05

1. Manufactured & Certified by : General Electric Company Nuclear Fuel & Components Manufacturing (GE NF & CM)

   2117 Castle Hayne Road, Wilmington, North Carolina 28401
   (Name and Address of NPT Certificate Holder)

   (b) Manufactured for : WNP 2 Richland, Washington 99352
   (Name and Address of N Certificate Holder for completed nuclear component)

2. Identification - Certificate Holder's S/N of Part : A9401 Nat'l Bd. No. N/A

   (a) Constructed According to Drawing No: 919D258G003 Rev 18 Dwg. Prepared by D. L. Peterson

   (b) Description of Part Inspected: Cylinder Tube & Flange

   (c) Applicable ASME Code: Section III , Edition 1974 , Addenda Date W'75 , Case No. 1361-2 Class 1

3. REMARKS: Standard part for use with Reactor, Hydrostatically tested at 1825 psi. min.
   (Brief description of service for which component was designed)

Sheet 1 of 2

We certify that the statements in this report are correct and this vessel part or appurtenance as defined in the code conforms to the rules of construction of the ASME Code Section III. (The applicable Designed Specification and Stress Report are not the responsibility of the NPT Certificate Holder for parts. An NPT Certification Holder for appurtenances is responsible for furnishing a separate Design Specification and Stress Report if the appurtenance is not included in the component Design Specification and Stress Report).

Date: 06/27/95 Signed GE - NEBG - NF & CM - QA By
(NPT Certificate Holder) (GE QA Representive)

Certificate of Authorization Expires: 6/16/96 Certification of Authorization No. : NPT N - 1151

Certification of Design for Appurtenance

Design information on file at GE Company, San Jose, California

Stress analysis report on file at GE Company, San Jose, California

DC22A6253 Rev. 1
Design specification certified by Bjorn Haaberg Prof. Eng. State Calif. Reg. No. 15570

DC22A6254 Rev 1
Stress analysis report certified by Edward Yoshio Prof. Eng. State Calif. Reg. No. M018646

Certification of Shop Inspection

I, the undersigned, holding a valid commission by the National Board of Boiler and Pressure Inspectors and/or the State or Province of North Carolina and employed by Department of Labor of State of North Carolina have inspected the part of a pressure vessel described in this Partial Data Report on 6/26, 1995, and state that to the best of my knowledge and belief, the NPT Certificate Holder has constructed this part in accordance with the ASME Code Section III.
By signing this certificate, neither the Inspector nor his employer makes any warranty, expressed or implied, concerning the part described in the Partial Data Report. Furthermore, neither the Inspector nor his employer shall be liable in any manner for any personal injury or property damages or a loss of any kind arising from or connected with this inspection.

6/27, 1995 Jerome P Emery NC 1231, Ohio, WC 3686 PA
Date Inspector's Signature National Board, State, Province And No.

*Supplemental sheets in form of lists, sketches or drawing may be used provided (1) size is 8-1/2" x 11", (2) information in 1-2 on this Data Report is included on each sheet, and (3) each sheet is numbered and number of sheets is recorded in Item 3. "REMARKS".

(07/90)

FORM N-2 (back)

Items 4-8 Incl. to be completed for single wall vessels, jackets vessels, or shells of heat exchangers.

4. Shell: Material _____ T.S. _____ Nominal Thickness ___ in. Corrosion Allowance ___ in. Dia. ___ ft. ___ in. Length ___ ft. ___ in.
(Kind & Spec. No.) (Min. of Range Specified)

5. Seams: Long _____ H.T.[1] _____ R.T. _____ Efficiency _____%
Girth _____ H.T.[1] _____ R.T. _____ No. of Courses _____

6. Heads: (a) Material _____ T.S. _____ (b) Material _____ T.S. _____

	Location (Top Bottom, Ends)	Thickness	Crown Radius	Knuckle Radius	Elliptical Ratio	Concial Apex Angle	Hemispherical Radius	Flat Diameter	Side to Press. (conv. or conc.)
(a)									
(b)									

If removable, bolts used _____ (Material, Spec. No., T.S. Size Number) Other fastening _____ (Describe or attach sketch)

7. Jacket Closure: _____
(Describe as ogee and weld, bar, etc. If bar give dimensions, if bolts, describe or sketch)

Drop Weight _____
Charpy Impact _____ ft-lb

8. Design pressure[2] 1250 psi at 575 °F at temp of _____ °F

Items 9 and 10 to be completed for tube sections

9. Tube Sheets: Stationary. Material _____ (Kind & Spec. No.) Dia. _____ (Subject to pressure) Thickness ___ in. Attachment _____ (Welded, Bolted)
Floating. Material _____ Dia. _____ Thickness ___ in. Attachment _____

10. Tubes: Material _____ O.D. _____ in. Thickness _____ inches or gage. Number _____ Type _____ (Str. or U)

Items 11 - 14 incl. to be completed for inner chambers of jacketed vessels, or channels of heat exchangers.

11. Shell: Material _____ T.S. _____ Nominal Thickness ___ in. Corrosion Allowance ___ in. Dia. ___ ft. ___ in. Length ___ ft. ___ in.
(Kind & Spec. No.) (Min. of Range Specified)

12. Seams: Long _____ H.T.[1] _____ R.T. _____ Efficiency _____%
Girth _____ H.T.[1] _____ R.T. _____ No. of Courses _____

13. Heads: (a) Material _____ T.S. _____ (b) Material _____ T.S. _____

	Location	Thickness	Crown Radius	Knuckle Radius	Elliptical Ratio	Concial Apex Angle	Hemispherical Radius	Flat Diameter	Side to Press. (conv. or conc.)
(a)	Top, bottom, ends								
(b)	Channel								

If removable, bolts used (a)_____ (b)_____ (c)_____ Other fastening _____ (Describe or attach sketch)

Drop Weight _____
Charpy Impact _____ ft-lb

14. Design pressure[2] _____ psi at _____ °F at temp of _____ °F

Items below to be completed for all vessels where applicable.

15. Safety Valve Outlets: Number _____ Size _____ Location _____

16. Nozzles:

Purpose (Inlet, Outlet, Drain)	Number	Dia. or Size	Type	Material	Thickness	Reinforcement Material	How Attached

17. Inspection Openings: Manholes, No. _____ Size _____ Location _____
Handholes, No. _____ Size _____ Location _____
Threaded, No. _____ Size _____ Location _____

18. Supports: Skirt _____ (Yes or No) Lugs _____ (Number) Legs _____ (Number) Other _____ (Describe) Attached _____ (Where & How)

1 - If Postweld Heat-Treated.
2 - List other internal or external pressure with coincident temperature when applicable.

WOT, No. 01090165 18

FORM N-2 NPT CERTIFICATE HOLDERS' DATA REPORT FOR NUCLEAR PART AND APPURTENANCES*

As required by the Provision of the ASME Code Rules, Section III, Div. I

6/30/05

1. Manufactured & Certified by : General Electric Company Nuclear Fuel & Components Manufacturing (GE NF & CM)

   2117 Castle Hayne Road, Wilmington, North Carolina 28401

   (Name and Address of NPT Certificate Holder)

   (b) Manufactured for : WNP 2 Richland, Washington 99352

   (Name and Address of N Certificate Holder for completed nuclear component)

2. Identification - Certificate Holder's S/N of Part : A9401 Nat'l Bd. No. N/A

   (a) Constructed According to Drawing No: 919D258G003 Rev 18 Dwg. Prepared by D. L. Peterson

   (b) Description of Part Inspected: Cylinder Tube & Flange

   (c) Applicable ASME Code: Section III , Edition 1974 , Addenda Date W'75 , Case No. 1361-2 Class 1

3. REMARKS: Standard part for use with Reactor. Hydrostatically tested at 1825 psi. min.

   (Brief description of service for which component was designed)

1. Cap 166B9274P001
   SA182 - F316
   3/8" thick x 1 1/16" OD

2. Indicator Tube 167B4908P001
   SA312 - TP316
   3/4" sch 40 - seamless pipe
   0.113" wall thickness
   1.065" max. dia.

3. Plug 159A1176P001
   SA182 - F304
   1/4" thick x 0.812" OD

4. Flange 919D610P001 (719E474)
   SA182 - F304
   3.37" thick x 9 5/8" OD

5. Head 129B3539P005
   SA182 - F304
   7/8" thick x 2.875" dia.

6. Ring Flange 114B5122P002
   SA182 - F304
   1" thick x 5.0" OD x 1.75" ID

7. Cap Screw 117C4516P002
   SA193 - B6
   6 ea. 1/2" dia. on 4 1/8" bolt circle

8. Plug 175A7961P001
   SA182 - F304
   0.38" thick x 1.307" dia.

9. Nut 114B5460P001
   XM - 19 SA479
   1.30" thick x 2.62" dia.

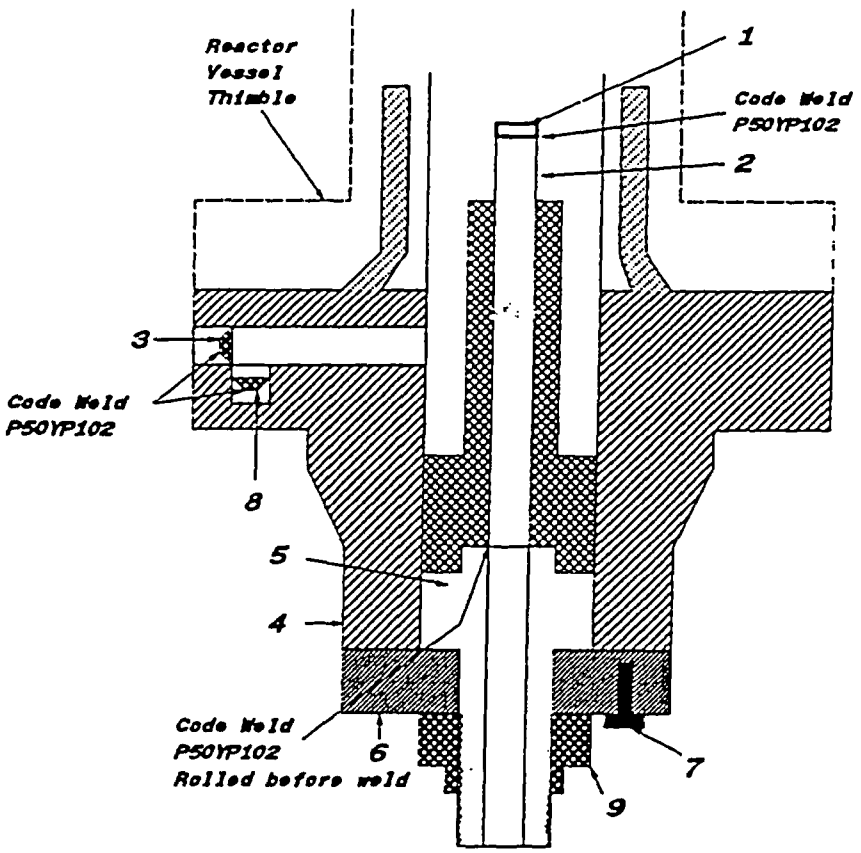

WOT No 01090165 19

ENERGY NORTHWEST
People·Vision·Solutions

FORM NIS-2 OWNER'S REPORT FOR REPAIRS OR REPLACEMENTS
As Required By The Provisions Of The ASME Code Section XI

1. Owner: Energy Northwest
Address: Columbia Generating Station, North Power Plant Loop, Richland, Washington, 99352
2. Plant: Columbia Generating Station
Address: Columbia Generating Station, North Power Plant Loop, Richland, Washington, 99352

Date: 06/29/05
Sheet: 1 Of 1
Unit: Not Applicable

3. (a) Work Performed By: Energy Northwest
(b) Repair Organization P.O. No, Job No, etc.: Energy Northwest
(c) Type Code Symbol Stamp: Not Applicable
(d) Certificate Of Authorization No.: Not Applicable
(e) Expiration Date: Not Applicable
4. Identification Of System: Control Rod Drive (CRD) System
5. (a) Applicable Construction Code: ASME Section III, Code Class 1, 1974 Edition with Winter 1975 Addenda, Code Case: 1361-2
(b) Applicable Edition Of ASME Section XI Utilized For Repairs Or Replacements: 1989 Edition with no Addenda, Code Case: None
6. Identification Of Components Repaired Or Replaced And Replacement Components

Name Of Component	Name Of Manufacturer	Manufacturer's Serial No	National Board No	Other I.D.	Year Built	Repaired, Replaced Or Replacement	ASME Code Stamped (Yes Or No) Code Class
CRD	GE	A8662	N/A	N/A	1988	Replaced	Yes, Code Class 1
CRD	GE	A9413	N/A	N/A	1995	Replacement	Yes, Code Class 1

7. Description Of Work Performed: Replaced Control Rod Drive (CRD) assembly at Core Location 30-51. The replacement work was performed in accordance with plant procedure PPM No 10.5.7 "Control Rod Drive Removal And Replacement" as follows:

1) Removed all eight (8) existing cap screws from the CRD assembly bolted flanged connection.
2) Removed existing CRD assembly, Serial No A8662.
3) Performed VT-1 visual examination on all eight (8) new replacement cap screws. VT-1 visual examination results acceptable.
4) Installed replacement CRD assembly, Serial No A9413.
5) Installed eight (8) VT-1 visually examined new replacement cap screws for the CRD assembly bolted flanged connection.
6) Torqued the cap screws for the CRD assembly bolted flanged connection to the required torque values.
7) Performed VT-2 visual examination during pressure test on CRD assembly bolted flanged connection to confirm pressure boundary integrity of the joint. No leakage was observed during pressure test.

NOTES -

1) The replacement CRD assembly, Serial No A9413 is certified to comply with ASME Section III, Code Class 1, 1974 Edition with Winter 1975 Addenda requirements.
2) New replacement cap screws, SA-540 Gr. B23, Class 4, Heat No 14813.
3) VT-1 visual examination Report No 2RPV-020 for the new replacement cap screws.

WOT No 01090165 19

ENERGY NORTHWEST
People·Vision·Solutions

FORM NIS-2 OWNER'S REPORT FOR REPAIRS OR REPLACEMENTS (Back)

8 Tests Conducted: Hydrostatic ☐ *Pneumatic* ☐ *Nominal Operating Pressure* ☐ *Other* ☐

Test Pressure: 1020 Psig — *Test Temperature:* 170° F

Component Design Pressure: 1250 Psig — *Temperature:* 575° F

9. Remarks: 1) See attached N-2 Code Data Report for the replacement CRD assembly, Serial No A9413.
2) * Pressure test on the CRD bolted flanged connection - Test pressure of 1020 Psig and test temperature of 170° F recorded during ASME Section XI pressure test in accordance with PPM No OSP-RPV-R801 "Reactor Pressure Vessel Leakage Test".

CERTIFICATE OF COMPLIANCE

We certify that the statements made in this Owner's Report are correct and this replacement *conforms to the rules of the ASME Code, Section XI.*
Type Code Symbol Stamp: Not Applicable
Certificate Of Authorization No.: Not Applicable
Expiration Date: Not Applicable

Prepared By Kuldip Singh — Kuldip Singh - Program Lead Engineer (PLE)
Date 6/30/05

Signed By Kuldip Singh — Kuldip Singh - Program Lead Engineer (PLE)
Date 6/30/05

CERTIFICATE OF INSERVICE INSPECTION

I, the undersigned, holding a valid commission issued by the National Board of Boiler and Pressure Vessel Inspectors and the State of Washington *and employed by* Hartford Steam Boiler Of Connecticut of Hartford, Connecticut *have inspected the components described in this Owner's Report during the period* 5-6-2005 *to* 7-8-2005 *and state to the best of my knowledge and belief, the Owner has performed examinations and taken corrective measures described in this Owner's Report in accordance with the requirements of the ASME Code, Section XI.*
By signing this certificate neither the Inspector nor his employer makes any warranty, expressed or implied, concerning the examinations and corrective measures described in this Owner's Report. Furthermore, neither the Inspector nor his employer shall be liable in any manner for any personal injury or property damage or a loss of any kind arising from or connected with this inspection.

Inspector's Signature

Commissions 10655(2) A, B, N, I
National Board, State, and Endorsements

Date 7-8-2005

WOT NO. 01090165 19

FORM N-2 NPT CERTIFICATE HOLDERS' DATA REPORT FOR NUCLEAR PART AND APPURTENANCES*

As required by the Provision of the ASME Code Rules, Section III, Div. I

6/30/05

1. Manufactured & Certified by : General Electric Company Nuclear Fuel & Components Manufacturing (GE NF & CM)

   2117 Castle Hayne Road, Wilmington, North Carolina 28401

   (Name and Address of NPT Certificate Holder)

   (b) Manufactured for : WNP 2 Richland, Washington 99352

   (Name and Address of N Certificate Holder for completed nuclear component)

2. Identification - Certificate Holder's S/N of Part : A9413 Nat'l Bd. No. N/A

   (a) Constructed According to Drawing No: 919D258G003 Rev 18 Dwg. Prepared by D. L. Peterson

   (b) Description of Part Inspected: Cylinder Tube & Flange

   (c) Applicable ASME Code: Section III , Edition 1974 , Addenda Date W'75 , Case No. 1361-2 Class 1

3. REMARKS: Standard part for use with Reactor. Hydrostatically tested at 1825 psi. min.

   (Brief description of service for which component was designed)

Sheet 1 of 2

We certify that the statements in this report are correct and this vessel part or appurtenance as defined in the code conforms to the rules of construction of the ASME Code Section III. (The applicable Designed Specification and Stress Report are not the responsibility of the NPT Certificate Holder for parts. An NPT Certification Holder for appurtenances is responsible for furnishing a separate Design Specification and Stress Report if the appurtenance is not included in the component Design Specification and Stress Report).

Date: 06/27/95 Signed GE - NEBG - NF & CM - QA By

(NPT Certificate Holder) (SC QA Representive)

Certificate of Authorization Expires: 6/16/96 Certification of Authorization No. : NPT N - 1151

Certification of Design for Appurtenance

Design information on file at GE Company, San Jose, California

Stress analysis report on file at GE Company, San Jose, California

DC22A6253 Rev. 1
Design specification certified by Bjorn Haaberg Prof. Eng. State Calif. Reg. No. 15570

DC22A6254 Rev 1
Stress analysis report certified by Edward Yoshio Prof. Eng. State Calif. Reg. No. M018646

Certification of Shop Inspection

I, the undersigned, holding a valid commission by the National Board of Boiler and Pressure Inspectors and/or the State or Province of North Carolina and employed by Department of Labor of State of North Carolina have inspected the part of a pressure vessel described in this Partial Data Report on 5/16, 1995, and state that to the best of my knowledge and belief, the NPT Certificate Holder has constructed this part in accordance with the ASME Code Section III.

By signing this certificate, neither the Inspector nor his employer makes any warranty, expressed or implied, concerning the part described in the Partial Data Report. Furthermore, neither the Inspector nor his employer shall be liable in any manner for any personal injury or property damages or a loss of any kind arising from or connected with this inspection.

6/27, 1995 Jerome P Ewen NC 1231, Ohio, WC 3686 PA

Date Inspector's Signature National Board, State, Province And No.

*Supplemental sheets in form of lists, sketches or drawing may be used provided (1) size is 8-1/2" x 11", (2) information in 1-2 on this Data Report is included on each sheet, and (3) each sheet is numbered and number of sheets is recorded in Item 3. "REMARKS".

(07/90)

FORM N-2 (back)

Items 4-8 Incl. to be completed for single wall vessels, jackets vessels, or shells of heat exchangers.

4. Shell: Material _____ (Kind & Spec. No.) T.S. _____ (Min. of Range Specified) Nominal Thickness ___ in. Corrosion Allowance ___ in. Dia. ___ ft. ___ in. Length ___ ft. ___ in.

5. Seams: Long _____ H.T.[1] _____ R.T. _____ Efficiency _____%

Girth _____ H.T.[1] _____ R.T. _____ No. of Courses _____

6. Heads: (a) Material _____ T.S. _____ (b) Material _____ T.S. _____

	Location (Top Bottom, Ends)	Thickness	Crown Radius	Knuckle Radius	Elliptical Ratio	Concial Apex Angle	Hemispherical Radius	Flat Diameter	Side to Press. (conv. or conc.)
(a)									
(b)									

If removable, bolts used _____ (Material, Spec. No., T.S. Size Number) Other fastening _____ (Describe or attach sketch)

7. Jacket Closure: _____ (Describe as ogee and weld, bar, etc. If bar give dimensions, if bolts, describe or sketch)

Drop Weight _____
Charpy Impact _____ ft-lb

8. Design pressure[2] 1250 psi at 575 °F at temp of _____ °F

Items 9 and 10 to be completed for tube sections

9. Tube Sheets: Stationary. Material _____ (Kind & Spec. No.) Dia. _____ (Subject to pressure) Thickness ___ in. Attachment _____ (Welded, Bolted)

Floating. Material _____ Dia. _____ Thickness ___ in. Attachment _____

10. Tubes: Material _____ O.D. _____ in. Thickness _____ inches or gage. Number _____ Type _____ (Str. or U)

Items 11 - 14 incl. to be completed for inner chambers of jacketed vessels, or channels of heat exchangers.

11. Shell: Material _____ (Kind & Spec. No.) T.S. _____ (Min. of Range Specified) Nominal Thickness ___ in. Corrosion Allowance ___ in. Dia. ___ ft. ___ in. Length ___ ft. ___ in.

12. Seams: Long _____ H.T.[1] _____ R.T. _____ Efficiency _____%

Girth _____ H.T.[1] _____ R.T. _____ No. of Courses _____

13. Heads: (a) Material _____ T.S. _____ (b) Material _____ T.S. _____

	Location	Thickness	Crown Radius	Knuckle Radius	Elliptical Ratio	Concial Apex Angle	Hemispherical Radius	Flat Diameter	Side to Press. (conv. or conc.)
(a)	Top, bottom, ends								
(b)	Channel								

If removable, bolts used (a)_____ (b)_____ (c)_____ Other fastening _____ (Describe or attach sketch)

Drop Weight _____
Charpy Impact _____ ft-lb

14. Design pressure[2] _____ psi at _____ °F at temp of _____ °F

Items below to be completed for all vessels where applicable.

15. Safety Valve Outlets: Number _____ Size _____ Location _____

16. Nozzles:

Purpose (Inlet, Outlet, Drain)	Number	Dia. or Size	Type	Material	Thickness	Reinforcement Material	How Attached

17. Inspection Openings: Manholes, No. _____ Size _____ Location _____
Handholes, No. _____ Size _____ Location _____
Threaded, No. _____ Size _____ Location _____

18. Supports: Skirt _____ (Yes or No) Lugs _____ (Number) Legs _____ (Number) Other _____ (Describe) Attached _____ (Where & How)

1 - If Postweld Heat-Treated.
2 - List other internal or external pressure with coincident temperature when applicable.

WOT No. 01090165 19

FORM N-2 NPT CERTIFICATE HOLDERS' DATA REPORT FOR NUCLEAR PART AND APPURTENANCES*

As required by the Provision of the ASME Code Rules, Section III, Div. I

6/30/05

1. Manufactured & Certified by : General Electric Company Nuclear Fuel & Components Manufacturing (GE NF & CM)

   2117 Castle Hayne Road, Wilmington, North Carolina 28401

   (Name and Address of NPT Certificate Holder)

   (b) Manufactured for : WNP 2 Richland, Washington 99352

   (Name and Address of N Certificate Holder for completed nuclear component)

2. Identification - Certificate Holder's S/N of Part : A9413 Nat'l Bd. No. N/A

   (a) Constructed According to Drawing No: 919D258G003 Rev 18 Dwg. Prepared by D. L. Peterson

   (b) Description of Part Inspected: Cylinder Tube & Flange

   (c) Applicable ASME Code: Section III , Edition 1974 , Addenda Date W'75 , Case No. 1361-2 Class 1

3. REMARKS: Standard part for use with Reactor. Hydrostatically tested at 1825 psi. min.

   (Brief description of service for which component was designed)

1. Cap 166B9274P001
   SA182 - F316
   3/8" thick x 1 1/16" OD

2. Indicator Tube 167B4908P001
   SA312 - TP316
   3/4" sch 40 - seamless pipe
   0.113" wall thickness
   1.065" max. dia.

3. Plug 159A1176P001
   SA182 - F304
   1/4" thick x 0.812" OD

4. Flange 919D610P001 (719E474)
   SA182 - F304
   3.37" thick x 9 5/8" OD

5. Head 129B3539P005
   SA182 - F304
   7/8" thick x 2.875" dia.

6. Ring Flange 114B5122P002
   SA182 - F304
   1" thick x 5.0" OD x 1.75" ID

7. Cap Screw 117C4516P002
   SA193 - B6
   6 ea. 1/2" dia. on 4 1/8" bolt circle

8. Plug 175A7961P001
   SA182 - F304
   0.38" thick x 1.307" dia.

9. Nut 114B5460P001
   XM - 19 SA479
   1.30" thick x 2.62" dia.

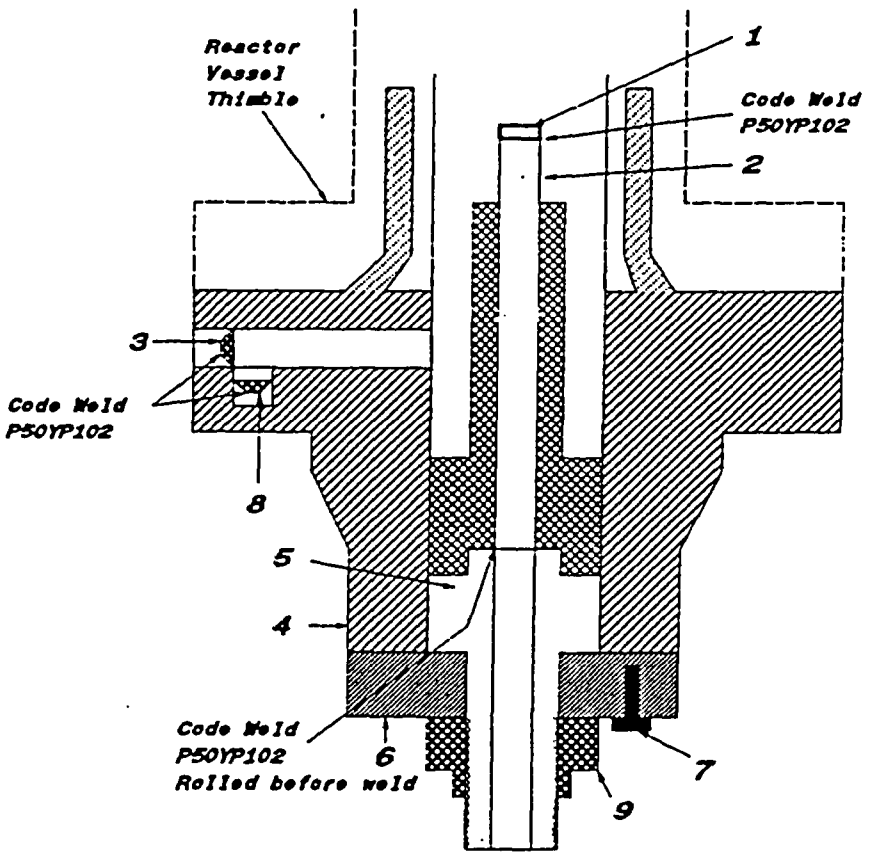

WOT No 01090165 35

ENERGY NORTHWEST
People·Vision·Solutions

FORM NIS-2 OWNER'S REPORT FOR REPAIRS OR REPLACEMENTS
As Required By The Provisions Of The ASME Code Section XI

Date: 06/29/05
Sheet: 1 Of 1
Unit: Not Applicable

1. **Owner:** Energy Northwest
   Address: Columbia Generating Station, North Power Plant Loop, Richland, Washington, 99352
2. **Plant:** Columbia Generating Station
   Address: Columbia Generating Station, North Power Plant Loop, Richland, Washington, 99352
3. **(a) Work Performed By:** Energy Northwest
   (b) Repair Organization P.O. No, Job No, etc.: Energy Northwest
   (c) Type Code Symbol Stamp: Not Applicable
   (d) Certificate Of Authorization No.: Not Applicable
   (e) Expiration Date: Not Applicable
4. **Identification Of System:** Control Rod Drive (CRD) System
5. **(a) Applicable Construction Code:** ASME Section III, Code Class 1, 1974 Edition with Winter 1975 Addenda, Code Case: 1361-2
   (b) Applicable Edition Of ASME Section XI Utilized For Repairs Or Replacements: 1989 Edition with no Addenda, Code Case: None
6. **Identification Of Components Repaired Or Replaced And Replacement Components**

Name Of Component	Name Of Manufacturer	Manufacturer's Serial No	National Board No	Other I.D.	Year Built	Repaired, Replaced Or Replacement	ASME Code Stamped (Yes Or No) Code Class
CRD	GE	7028	N/A	N/A	1974	Replaced	Yes, Code Class 1
CRD	GE	A9376	N/A	N/A	1996	Replacement	Yes, Code Class 1

7. **Description Of Work Performed:** Replaced Control Rod Drive (CRD) assembly at Core Location 34-23. The replacement work was performed in accordance with plant procedure PPM No 10.5.7 "Control Rod Drive Removal And Replacement" as follows:

1) Removed all eight (8) existing cap screws from the CRD assembly bolted flanged connection.
2) Removed existing CRD assembly, Serial No 7028.
3) Performed VT-1 visual examination on all eight (8) new replacement cap screws. VT-1 visual examination results acceptable.
4) Installed replacement CRD assembly, Serial No A9376.
5) Installed eight (8) VT-1 visually examined new replacement cap screws for the CRD assembly bolted flanged connection.
6) Torqued the cap screws for the CRD assembly bolted flanged connection to the required torque values.
7) Performed VT-2 visual examination during pressure test on CRD assembly bolted flanged connection to confirm pressure boundary integrity of the joint. No leakage was observed during pressure test.

NOTES -

1) The replacement CRD assembly, Serial No A9376 is certified to comply with ASME Section III, Code Class 1, 1974 Edition with Winter 1975 Addenda requirements.
2) New replacement cap screws, SA-540 Gr. B23, Class 4, Heat No 14813.
3) VT-1 visual examination Report No 2RPV-020 for the new replacement cap screws.

WOT No 01090165 35

ENERGY NORTHWEST
People · Vision · Solutions

FORM NIS-2 OWNER'S REPORT FOR REPAIRS OR REPLACEMENTS (Back)

8 Tests Conducted: Hydrostatic ☐ *Pneumatic* ☐ *Nominal Operating Pressure* ☐ *Other* ☐

Test Pressure: 1020 Psig *Test Temperature:* 170° F
Component Design Pressure: 1250 Psig *Temperature:* 575° F

9. Remarks: 1) See attached N-2 Code Data Report for the replacement CRD assembly, Serial No A9376.
2) * Pressure test on the CRD bolted flanged connection - Test pressure of 1020 Psig and test temperature of 170° F recorded during ASME Section XI pressure test in accordance with PPM No OSP-RPV-R801 "Reactor Pressure Vessel Leakage Test".

CERTIFICATE OF COMPLIANCE

We certify that the statements made in this Owner's Report are correct and this replacement *conforms to the rules of the ASME Code, Section XI.*
Type Code Symbol Stamp: Not Applicable
Certificate Of Authorization No.: Not Applicable
Expiration Date: Not Applicable

Prepared By Kuldip Singh - Program Lead Engineer (PLE) *Signed By:* Kuldip Singh - Program Lead Engineer (PLE)

Date 6/30/05 *Date* 6/30/05

CERTIFICATE OF INSERVICE INSPECTION

I, the undersigned, holding a valid commission issued by the National Board of Boiler and Pressure Vessel Inspectors and the State of Washington *and employed by* Hartford Steam Boiler Of Connecticut of Hartford, Connecticut *have inspected the components described in this Owner's Report during the period* 5-6-2005 *to* 7-8-2005 *and state to the best of my knowledge and belief, the Owner has performed examinations and taken corrective measures described in this Owner's Report in accordance with the requirements of the ASME Code, Section XI.*
By signing this certificate neither the Inspector nor his employer makes any warranty, expressed or implied, concerning the examinations and corrective measures described in this Owner's Report. Furthermore, neither the Inspector nor his employer shall be liable in any manner for any personal injury or property damage or a loss of any kind arising from or connected with this inspection.

Inspector's Signature *Commissions* 10655 N2 A, B, N, I
National Board, State, and Endorsements

Date 7-8-2005

WOT No. 01090165 35

FORM N-2 NPT CERTIFICATE HOLDERS' DATA REPORT FOR NUCLEAR PART AND APPURTENANCES*

As required by the Provision of the ASME Code Rules, Section III, Div. I

6/30/05

1. Manufactured & Certified by : General Electric Company Nuclear Energy (GE-NE)

   3901 Castle Hayne Road, Wilmington, North Carolina 28401

   (Name and Address of NPT Certificate Holder)

   (b) Manufactured for : WNP 2 Richland, Washington 99352

   (Name and Address of N Certificate Holder for completed nuclear component)

2. Identification - Certificate Holder's S/N of Part : A9376 Nat'l Bd. No. N/A

   (a) Constructed According to Drawing No: 919D258G003 Rev 18 Dwg. Prepared by D. L. Peterson

   (b) Description of Part Inspected: Cylinder Tube & Flange

   (c) Applicable ASME Code: Section III , Edition 1974 , Addenda Date W'75 , Case No. 1361-2 Class 1

3. REMARKS: Standard part for use with Reactor. Hydrostatically tested at 1825 psi. min.

   (Brief description of service for which component was designed)

Sheet 1 of 2

We certify that the statements in this report are correct and this vessel part or appurtenance as defined in the code conforms to the rules of construction of the ASME Code Section III. (The applicable Designed Specification and Stress Report are not the responsibility of the NPT Certificate Holder for parts. An NPT Certification Holder for appurtenances is responsible for furnishing a separate Design Specification and Stress Report if the appurtenance is not included in the component Design Specification and Stress Report).

Date: 03/28/96 Signed GE-NE By C S Bazzett

(NPT Certificate Holder) (SC QA Representive)

Certificate of Authorization Expires: 6/16/96 Certification of Authorization No. : NPT N - 1151

Certification of Design for Appurtenance

Design information on file at GE Company, San Jose, California

Stress analysis report on file at GE Company, San Jose, California

DC22A6253 Rev. 2
Design specification certified by B.N. Sridhar Prof. Eng. State Calif. Reg. No. 18345

DC22A6254 Rev 1
Stress analysis report certified by Edward Yoshio Prof. Eng. State Calif. Reg. No. M018646

Certification of Shop Inspection

I, the undersigned, holding a valid commission by the National Board of Boiler and Pressure Inspectors and/or the State or Province of North Carolina and employed by Department of Labor of State of North Carolina have inspected the part of a pressure vessel described in this Partial Data Report on 3-29, 96, and state that to the best of my knowledge and belief, the NPT Certificate Holder has constructed this part in accordance with the ASME Code Section III.

By signing this certificate, neither the Inspector nor his employer makes any warranty, expressed or implied, concerning the part described in the Partial Data Report. Furthermore, neither the Inspector nor his employer shall be liable in any manner for any personal injury or property damages or a loss of any kind arising from or connected with this inspection.

3-29, 96 Thomas Fiser NC 856

Date Inspector's Signature National Board, State, Province And No.

*Supplemental sheets in form of lists, sketches or drawing may be used provided (1) size is 8-1/2" x 11", (2) information in 1-2 on this Data Report is included on each sheet, and (3) each sheet is numbered and number of sheets is recorded in Item 3. "REMARKS".

(07/90)

FORM N-2 (back)

Items 4-8 Incl. to be completed for single wall vessels, jackets vessels, or shells of heat exchangers.

4. Shell: Material _____ T.S. _____ Nominal Thickness ___ in. Corrosion Allowance ___ in. Dia. ___ ft. ___ in. Length ___ ft. ___
(Kind & Spec. No.) (Min. of Range Specified)

5. Seams: Long _____ H.T.[1] _____ R.T. _____ Efficiency _____%
Girth _____ H.T.[1] _____ R.T. _____ No. of Courses _____

6. Heads: (a) Material _____ T.S. _____ (b) Material _____ T.S. _____

	Location (Top Bottom, Ends)	Thickness	Crown Radius	Knuckle Radius	Elliptical Ratio	Concial Apex Angle	Hemispherical Radius	Flat Diameter	Side to Press. (conv. or conc.)
(a)									
(b)									

If removable, bolts used _____ (Material, Spec. No., T.S. Size Number) Other fastening _____ (Describe or attach sketch)

7. Jacket Closure: _____
(Describe as ogee and weld, bar, etc. If bar give dimensions, if bolts, describe or sketch)

Drop Weight _____
Charpy Impact _____ ft-lb

8. Design pressure[2] 1250 psi at 575 °F at temp of _____ °F

Items 9 and 10 to be completed for tube sections

9. Tube Sheets: Stationary. Material _____ (Kind & Spec. No.) Dia. _____ (Subject to pressure) Thickness ___ in. Attachment _____ (Welded, Bolted)
Floating. Material _____ Dia. _____ Thickness ___ in. Attachment _____

10. Tubes: Material _____ O.D. _____ in. Thickness _____ inches or gage. Number _____ Type _____ (Str. or U)

Items 11 - 14 incl. to be completed for inner chambers of jacketed vessels, or channels of heat exchangers.

11. Shell: Material _____ T.S. _____ Nominal Thickness ___ in. Corrosion Allowance ___ in. Dia. ___ ft. ___ in. Length ___ ft. ___
(Kind & Spec. No.) (Min. of Range Specified)

12. Seams: Long _____ H.T.[1] _____ R.T. _____ Efficiency _____%
Girth _____ H.T.[1] _____ R.T. _____ No. of Courses _____

13. Heads: (a) Material _____ T.S. _____ (b) Material _____ T.S. _____

	Location	Thickness	Crown Radius	Knuckle Radius	Elliptical Ratio	Concial Apex Angle	Hemispherical Radius	Flat Diameter	Side to Press. (conv. or conc.)
(a)	Top, bottom, ends								
(b)	Channel								

If removable, bolts used (a)_____ (b)_____ (c)_____ Other fastening _____ (Describe or attach sketch)

Drop Weight _____
Charpy Impact _____ ft-lb

14. Design pressure[2] _____ psi at _____ °F at temp of _____ °F

Items below to be completed for all vessels where applicable.

15. Safety Valve Outlets: Number _____ Size _____ Location _____

16. Nozzles:

Purpose (Inlet, Outlet, Drain)	Number	Dia. or Size	Type	Material	Thickness	Reinforcement Material	How Attached

17. Inspection Openings: Manholes, No. _____ Size _____ Location _____
Handholes, No. _____ Size _____ Location _____
Threaded, No. _____ Size _____ Location _____

18. Supports: Skirt _____ (Yes or No) Lugs _____ (Number) Legs _____ (Number) Other _____ (Describe) Attached _____ (Where & How)

1 - If Postweld Heat-Treated.
2 - List other internal or external pressure with coincident temperature when applicable.

WOT No. 01090165 35

FORM N-2 NPT CERTIFICATE HOLDERS' DATA REPORT FOR NUCLEAR PART AND APPURTENANCES*

As required by the Provision of the ASME Code Rules, Section III, Div. I

Philip Sept 6/30/05.

1. Manufactured & Certified by : General Electric Company Nuclear Energy (GE-NE)
   3901 Castle Hayne Road, Wilmington, North Carolina 28401
   (Name and Address of NPT Certificate Holder)

   (b) Manufactured for : WNP 2 Richland, Washington 99352
   (Name and Address of N Certificate Holder for completed nuclear component)

2. Identification - Certificate Holder's S/N of Part : A9376 Nat'l Bd. No. N/A

   (a) Constructed According to Drawing No: 919D258G003 Rev 18 Dwg. Prepared by D. L. Peterson

   (b) Description of Part Inspected: Cylinder Tube & Flange

   (c) Applicable ASME Code: Section III , Edition 1974 , Addenda Date W'75 , Case No. 1361-2 Class 1

3. REMARKS: Standard part for use with Reactor. Hydrostatically tested at 1825 psi. min.
   (Brief description of service for which component was designed)

1. Cap 166B9274P001
   SA182 - F316
   3/8" thick x 1 1/16" OD

2. Indicator Tube 167B4908P001
   SA312 - TP316
   3/4" sch 40 - seamless pipe
   0.113" wall thickness
   1.065" max. dia.

3. Plug 159A1176P001
   SA182 - F304
   1/4" thick x 0.812" OD

4. Flange 919D610P001 (719E474)
   SA182 - F304
   3.37" thick x 9 5/8" OD

5. Head 129B3539P005
   SA182 - F304
   7/8" thick x 2.875" dia.

6. Ring Flange 114B5122P002
   SA182 - F304
   1" thick x 5.0" OD x 1.75" ID

7. Cap Screw 117C4516P002
   SA193 - B6
   6 ea. 1/2" dia. on 4 1/8" bolt circle

8. Plug 175A7961P001
   SA182 - F304
   0.38" thick x 1.307" dia.

9. Nut 114B5460P001
   XM - 19 SA479
   1.30" thick x 2.62" dia.

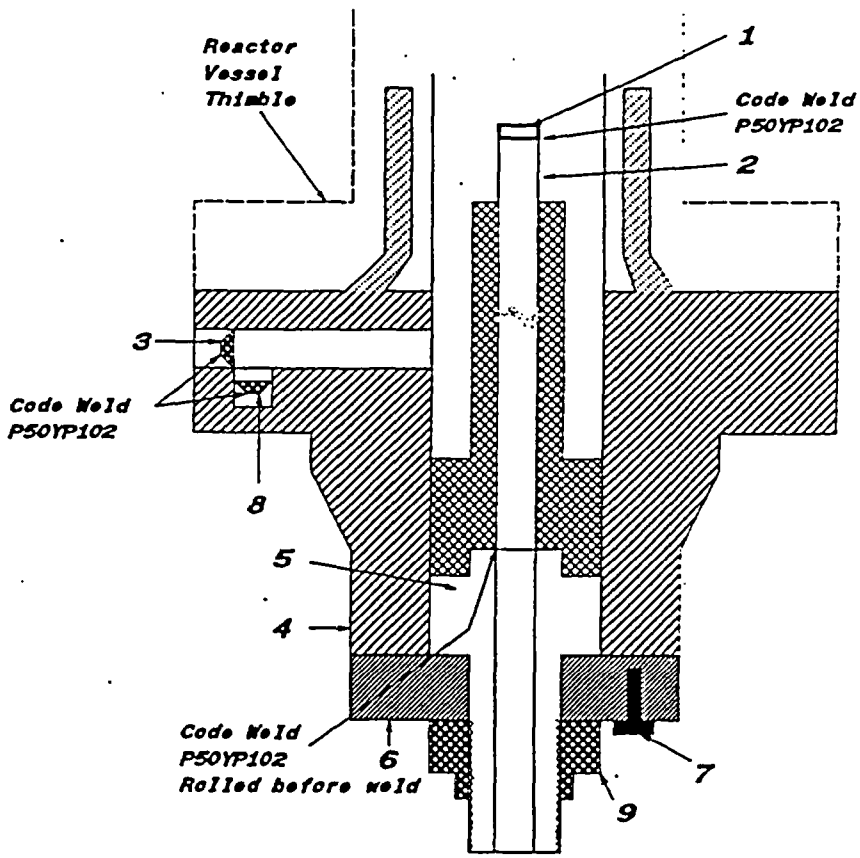

WOT No 01090165 36

ENERGY NORTHWEST
People·Vision·Solutions

FORM NIS-2 OWNER'S REPORT FOR REPAIRS OR REPLACEMENTS
As Required By The Provisions Of The ASME Code Section XI

1. Owner: Energy Northwest
Address: Columbia Generating Station, North Power Plant Loop, Richland, Washington, 99352
2. Plant: Columbia Generating Station
Address: Columbia Generating Station, North Power Plant Loop, Richland, Washington, 99352

Date: 06/29/05
Sheet: 1 Of 1
Unit: Not Applicable

3. (a) Work Performed By: Energy Northwest
(b) Repair Organization P.O. No, Job No, etc.: Energy Northwest
(c) Type Code Symbol Stamp: Not Applicable
(d) Certificate Of Authorization No.: Not Applicable
(e) Expiration Date: Not Applicable
4. Identification Of System: Control Rod Drive (CRD) System
5. (a) Applicable Construction Code: ASME Section III, Code Class 1, 1974 Edition with Winter 1975 Addenda, Code Case: 1361-2
(b) Applicable Edition Of ASME Section XI Utilized For Repairs Or Replacements: 1989 Edition with no Addenda, Code Case: None
6. Identification Of Components Repaired Or Replaced And Replacement Components

Name Of Component	Name Of Manufacturer	Manufacturer's Serial No	National Board No	Other I.D.	Year Built	Repaired, Replaced Or Replacement	ASME Code Stamped (Yes Or No) Code Class
CRD	GE	6319	N/A	N/A	1974	Replaced	Yes, Code Class 1
CRD	GE	A8470	N/A	N/A	1988	Replacement	Yes, Code Class 1

7. Description Of Work Performed: Replaced Control Rod Drive (CRD) assembly at Core Location 34-47. The replacement work was performed in accordance with plant procedure PPM No 10.5.7 "Control Rod Drive Removal And Replacement" as follows:

1) Removed all eight (8) existing cap screws from the CRD assembly bolted flanged connection.
2) Removed existing CRD assembly, Serial No 6319.
3) Performed VT-1 visual examination on all eight (8) new replacement cap screws. VT-1 visual examination results acceptable.
4) Installed replacement CRD assembly, Serial No A8470.
5) Installed eight (8) VT-1 visually examined new replacement cap screws for the CRD assembly bolted flanged connection.
6) Torqued the cap screws for the CRD assembly bolted flanged connection to the required torque values.
7) Performed VT-2 visual examination during pressure test on CRD assembly bolted flanged connection to confirm pressure boundary integrity of the joint. No leakage was observed during pressure test.

NOTES -

1) The replacement CRD assembly, Serial No A8470 is certified to comply with ASME Section III, Code Class 1, 1974 Edition with Winter 1975 Addenda requirements.
2) New replacement cap screws, SA-540 Gr. B23, Class 4, Heat No 14813.
3) VT-1 visual examination Report No 2RPV-020 for the new replacement cap screws.

WOT No 01090165 36

ENERGY NORTHWEST
People·Vision·Solutions

FORM NIS-2 OWNER'S REPORT FOR REPAIRS OR REPLACEMENTS (Back)

8 Tests Conducted: Hydrostatic ☐ *Pneumatic* ☐ *Nominal Operating Pressure* ☐ *Other* ☒

Test Pressure: 1020 Psig *Test Temperature:* 170° F

Component Design Pressure: 1250 Psig *Temperature:* 575° F

9. Remarks: 1) See attached N-2 Code Data Report for the replacement CRD assembly, Serial No A8470.
2) * Pressure test on the CRD bolted flanged connection - Test pressure of 1020 Psig and test temperature of 170° F recorded during ASME Section XI pressure test in accordance with PPM No OSP-RPV-R801 "Reactor Pressure Vessel Leakage Test".

CERTIFICATE OF COMPLIANCE

We certify that the statements made in this Owner's Report are correct and this replacement *conforms to the rules of the ASME Code, Section XI.*
Type Code Symbol Stamp: Not Applicable
Certificate Of Authorization No.: Not Applicable
Expiration Date: Not Applicable

Prepared By Kuldip Singh - Program Lead Engineer (PLE) *Signed By* Kuldip Singh - Program Lead Engineer (PLE)

Date 6/30/05 *Date* 6/30/05

CERTIFICATE OF INSERVICE INSPECTION

I, the undersigned, holding a valid commission issued by the National Board of Boiler and Pressure Vessel Inspectors and the State of Washington *and employed by* Hartford Steam Boiler Of Connecticut of Hartford, Connecticut *have inspected the components described in this Owner's Report during the period* 5-6-2005 *to* 7-8-2005 *and state to the best of my knowledge and belief, the Owner has performed examinations and taken corrective measures described in this Owner's Report in accordance with the requirements of the ASME Code, Section XI.*
By signing this certificate neither the Inspector nor his employer makes any warranty, expressed or implied, concerning the examinations and corrective measures described in this Owner's Report. Furthermore, neither the Inspector nor his employer shall be liable in any manner for any personal injury or property damage or a loss of any kind arising from or connected with this inspection.

Inspector's Signature *Commissions* 1016550 A, B, H, I
National Board, State, and Endorsements

Date 7-8-2005

WO7 NO. 01090165 36

Philip Sup 6/30/05

FORM N-2 NPT CERTIFICATE HOLDERS' DATA REPORT FOR NUCLEAR PART AND APPURTENANCES*
As required by the Provision of the ASME Code Rules, Section III, Div. 1

1. Manufactured & Certified by: GE Company, 2117 Castle Hayne Rd., Wilmington, N.C. 28402
(Name and Address of NPT Certificate Holder)

(b) Manufactured for: WNP-2, RICHLAND, Wa. 99352
(Name and Address of N Certificate Holder for completed nuclear component)

2. Identification-Certificate Holders's S/N of Part: A8470 Nat'l Bd. No. N/A

(a) Constructed According to Drawing No: 919D258G003 Dwg. Prepared by D. L. Petersen

(b) Description of Part Inspected: CYLINDER TUBE & FLANGE

(c) Applicable ASME Code: Section III, Edition 1974, Addenda Date W'75 Case No. 1361-2 Class 1

3. REMARKS: Sub-assembly of Control Rod Drive for use with reactor.
(Brief description of service for which component was designed)
Hydrostatically tested at 1825 psi. min.

*Sheet 1 of 2

We certify that the statements in this report are correct and this vessel part or appurtenance as defined in the code conforms to the rules of construction of the ASME Code Section III. (The applicable Designed Specification and Stress Report are not the responsibility of the NPT Certificate Holder for parts. An NPT Certification Holder for appurtenances is responsible for furnishing a separate Design Specification and Stress Report if the appurtenance is not included in the component Design Specification and Stress Report).

DATE: 12/31, 19 88 Signed GE-NEBG-NF&CM-QA By [signature]
(NPT Certificate Holder)

Certificate Of Authorization Expires: 6/16/90 Certification of Authorization No.: NPT N-1151

CERTIFICATION OF DESIGN FOR APPURTENANCE

Design information on file at GE COMPANY, SAN JOSE, CALIFORNIA

Stress analysis report on file at GE COMPANY, SAN JOSE, CALIFORNIA
DC22A6253 Rev. 0
Design specification certified by BJORN HAABERG Prof. Eng. State CALIF. Reg. No. 15570
DC22A6254 Rev. 0.
Stress analysis report certified by EDWARD YOSHIO Prof. Eng. State CALIF. Reg. No. M018646

CERTIFICATION OF SHOP INSPECTION

I, the undersigned, holding a valid commission by the National Board of Boiler and Pressure Inspectors and/or the State or Province of NORTH CAROLINA and employed by DEPARTMENT OF LABOR of STATE OF NORTH CAROLINA have inspected the part or a pressure vessel described in this Partial Data Report on 12-31 1988, and state that to the best of my knowledge and belief, the NPT Certificate Holder has constructed this part in accordance with the ASME Code Section III.

By signing this certificate, neither the Inspector nor his employer makes any warranty, expressed or implied, concerning the part described in the Partial Data Report. Furthermore, neither the Inspector nor his employer shall be liable in any manner for any personal injury or property damages or a loss of any kind arising from or connected with this inspection.

12-31, 1988 [signature] NB 779, PA, WC2L60, OHIO
DATE Inspector's Signature National Board, State, Province and No.

*Supplemental sheets in form of lists, sketches or drawing may be used provided (1) size is 8-1/2" X 11", (2) information in 1-2 on this Data Report is included on each sheet, and (3) each sheet is numbered and number of sheets is recorded in Item 3. "REMARKS"

(10/77)

VERIFIED & ACCEPTED [signature] III 1-15-89
R.I. Inspector Date

FORM N-2 (Back)

Items 4-8 Incl. to be completed for single wall vessels, jackets vessels, or shells of heat exchangers.

4. Shell: Material_____ T.S._____ Nominal Thickness___in. Corrosion Allowance___in Dia.___ft.___in. Length___ft.___in.
(Kind & Spec.No) (Min.ofRange Specified)

5. Seams: Long_____ H.T.[1]_____ R.T._____ Efficiency_____%

Girth_____ H.T.[1]_____ R.T._____ No. of Courses_____

6. Heads: (a) Material_____ T.S._____ (b)Material_____ T.S._____

Location (Top Bottom,Ends)	Thickness	Crown Radius	Knuckle Radius	Elliptical Ratio	Concial Apex Angle	Hemispherical Radius	Flat Diameter	Side to Press. (conv.or conc.)
(a)_____	_____	_____	_____	_____	_____	_____	_____	_____
(b)_____	_____	_____	_____	_____	_____	_____	_____	_____

If removable, bolts used_____ Other fastening_____
(Material,Spec.No., T.S. Size Number) (Describe or attach sketch)

7. Jacket Closure:_____
(Describe as ogee and weld,bar,etc. If bar give dimensions, if bolts, describe or sketch)

8. Design Pressure [2] 1250 psi at 575 °F Drop Weight_____ Charpy Impact_____ ft-lb at temp. of_____ °F

Items 9 and 10 to be completed for tube sections.

9. Tube Sheets: Stationary Mat'l._____ Dia._____ Thickness__in. Attachment_____
(Kind of Spec. No.) (Subj.to Press.) (Welded, Bolted)
Floating. Material _____ Dia._____ Thickness___in. Attachment_____

10. Tubes: Material_____ O.D.____in. Thickness_____ inches or gage. Number____ Type_____
(Str. or U)

Items 11-14 incl. to be completed for inner chambers of jacketed vessels, or channels of heat exchangers

11. Shell: Material____ T.S.____ Nominal Thickness___in. Corrosion Allowance___in. Dia.___ft.___in___Length___ft.___in.
(Kind&Spec.No.) (Min.ofRange Specified)

12. Seams: Long_____ H.T.[1]_____ R.T._____ Efficiency_____%
Girth_____ H.T.[1]_____ R.T._____ No. of Courses_____

13. Heads (a) Material_____ T.S._____ (b)Material_____ T.S._____

Location (a)Top, Bottom, End	Ticnkess	Crown Radius	Knucle Radius	Elliptical Ratio	Concial Apex Angle	Hemispherical Radius	Fat Diameter	Side to Press (Conv.or Conc.)
	_____	_____	_____	_____	_____	_____	_____	_____
(b)Channel	_____	_____	_____	_____	_____	_____	_____	_____

If removable, bolts used (a)_____ (b)_____ (c)_____ Other Fastening_____
(Describe or attach sketch

14. Design pressure[2]_____ psi at_____ °F Drop Weight_____, Charpy Impact_____ ft-lb at temp. of _____ °F

Items below to be completed for all vessels where applicable.

15. Safety Valve Outlets: Number_____ Size_____ Location_____

16. Nozzles:

Purpose (Inlet Outlet, Drain)	Number	Dia or Size	Type	Material	Thickness	Reinforcement Material	Attached
_____	_____	_____	_____	_____	_____	_____	_____
_____	_____	_____	_____	_____	_____	_____	_____

17. Inspection Openings: Manholes, No._____ Size_____ Location_____
Handles, No._____ Size_____ Location_____
Threaded, No._____ Size_____ Location_____

18. Supports: Shirt_____ Lugs_____ Legs_____ Other_____ Attached_____
(Yes or No) (Number) (Number) (Describe) (Where & How)

[1] If Postweld Heat-Treated.

[2] List other internal or external pressure with conincident temperature when applicalbe.

WOT NO. 0109016536

Rudolph Sup 6/30/05

FORM N-2 NPT CERTIFICATE HOLDERS' DATA REPORT FOR NUCLEAR PART AND APPURTENANCES

As required by the Provision of the ASME Code Rules, Section III, Div. I

1. Manufactured & Certified by: GE Company, 2117 Castle Hayne Rd., Wilmington, N.C. 28402
(Name and Address of NPT Certificate Holder)

(b) Manufactured for: WNP-2, RICHLAND, Wa. 99352
(Name and Address of N Certificate Holder for completed nuclear component)

2. Identification-Certificate Holders's S/N of Part: A8470 Nat'l Bd. N. N/A

(a) Constructed According to Drawing No: 919D258G003 Dwg. Prepared by D. L. Peterson

(b) Description of Part Inspected: CYLINDER TUBE & FLANGE

(C) Applicable ASME Code: Section III, Edition 1974, Addenda Date W'75, Case No. 1361-2 Class 1

3. REMARKS: Sub-assembly of Control Rod Drive for use with reactor.
(Brief description of service for which component was designed)
Hydrostatically tested at 1825 psi. min.

Sheet 2 of 2

1. Cap 167A2343P1
SA182-F304
3/8 thick X 1 1/16 OD

2. Indicator Tube 104B1336P3
SA312-TP316
3/4 sch 40-seamless pipe
0.113 wall thickness
1.065 max. dia.

3. Plug 159A1176P1
SA182-P304
1/4 thick x 0.812 OD

4. Flange 919D610P1 (719E474)
SA182-F304
3.37 thick x 9 5/8 OD

5. Head 129B3539P3, P5
SA182-F304
7/8 thick x 2.875 Dia.

6. Ring Flange 114B5122P2
SA182-F304
1" thick x 5.0 OD x 1.75 ID

7. Cap Screw 117C4516P2
SA193-B6
6 ea. 1/2 dia. on 4 1/8 bolt circle

8. Plug 175A7961P1
SA182-F304
0.38 thick x 1.307 dia.

9. Nut 114B5460P1
SA193-B8A
1.30 thick x 2.62 dia.

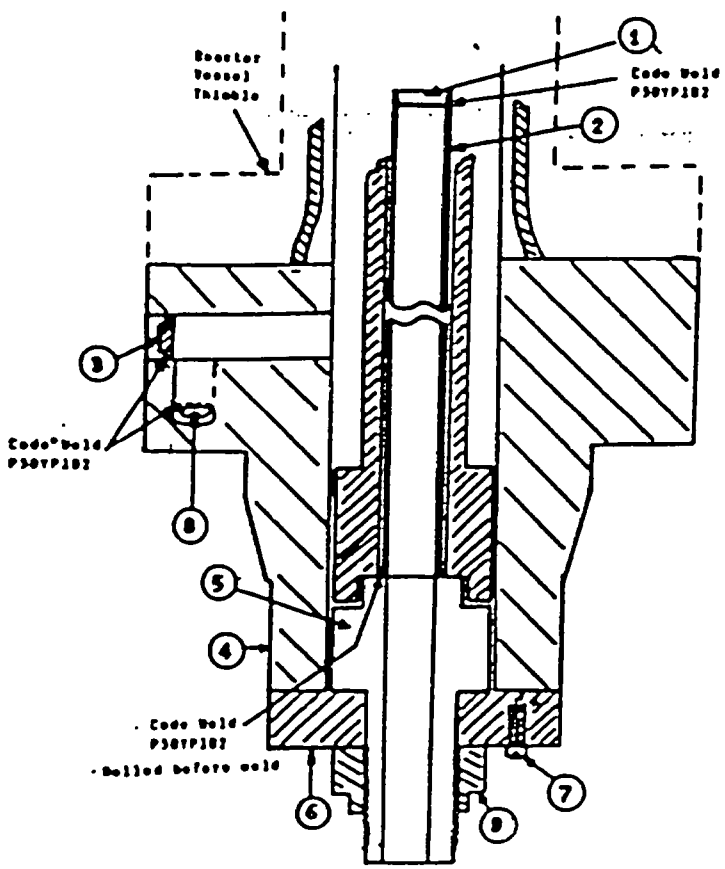

WOT No 01090165 37

ENERGY NORTHWEST
People·Vision·Solutions

FORM NIS-2 OWNER'S REPORT FOR REPAIRS OR REPLACEMENTS
As Required By The Provisions Of The ASME Code Section XI

Date: 06/29/05
Sheet: 1 Of 1
Unit: Not Applicable

1. **Owner:** Energy Northwest
   Address: Columbia Generating Station, North Power Plant Loop, Richland, Washington, 99352
2. **Plant:** Columbia Generating Station
   Address: Columbia Generating Station, North Power Plant Loop, Richland, Washington, 99352
3. **(a) Work Performed By:** Energy Northwest
   (b) Repair Organization P.O. No, Job No, etc.: Energy Northwest
   (c) Type Code Symbol Stamp: Not Applicable
   (d) Certificate Of Authorization No.: Not Applicable
   (e) Expiration Date: Not Applicable
4. **Identification Of System:** Control Rod Drive (CRD) System
5. **(a) Applicable Construction Code:** ASME Section III, Code Class 1, 1974 Edition with Winter 1975 Addenda, Code Case: 1361-2
   (b) Applicable Edition Of ASME Section XI Utilized For Repairs Or Replacements: 1989 Edition with no Addenda, Code Case: None
6. **Identification Of Components Repaired Or Replaced And Replacement Components**

Name Of Component	Name Of Manufacturer	Manufacturer's Serial No	National Board No	Other I.D.	Year Built	Repaired, Replaced Or Replacement	ASME Code Stamped (Yes Or No) Code Class
CRD	GE	A8750	N/A	N/A	1988	Replaced	Yes, Code Class 1
CRD	GE	A9451	N/A	N/A	1995	Replacement	Yes, Code Class 1

7. **Description Of Work Performed:** Replaced Control Rod Drive (CRD) assembly at Core Location 34-55. The replacement work was performed in accordance with plant procedure PPM No 10.5.7 "Control Rod Drive Removal And Replacement" as follows:

1) Removed all eight (8) existing cap screws from the CRD assembly bolted flanged connection.
2) Removed existing CRD assembly, Serial No A8750.
3) Performed VT-1 visual examination on all eight (8) new replacement cap screws. VT-1 visual examination results acceptable.
4) Installed replacement CRD assembly, Serial No A9451.
5) Installed eight (8) VT-1 visually examined new replacement cap screws for the CRD assembly bolted flanged connection.
6) Torqued the cap screws for the CRD assembly bolted flanged connection to the required torque values.
7) Performed VT-2 visual examination during pressure test on CRD assembly bolted flanged connection to confirm pressure boundary integrity of the joint. No leakage was observed during pressure test.

NOTES -

1) The replacement CRD assembly, Serial No A9451 is certified to comply with ASME Section III, Code Class 1, 1974 Edition with Winter 1975 Addenda requirements.
2) New replacement cap screws, SA-540 Gr. B23, Class 4, Heat No 14813.
3) VT-1 visual examination Report No 2RPV-020 for the new replacement cap screws.

WOT No 01090165 37

ENERGY NORTHWEST
People·Vision·Solutions

FORM NIS-2 OWNER'S REPORT FOR REPAIRS OR REPLACEMENTS (Back)

8 Tests Conducted: Hydrostatic [ ] *Pneumatic* [ ] *Nominal Operating Pressure* [ ] *Other* [•]

Test Pressure: 1020 Psig *Test Temperature:* 170° F

Component Design Pressure: 1250 Psig *Temperature:* 575° F

9. Remarks: 1) See attached N-2 Code Data Report for the replacement CRD assembly, Serial No A9451.
2) * Pressure test on the CRD bolted flanged connection - Test pressure of 1020 Psig and test temperature of 170° F recorded during ASME Section XI pressure test in accordance with PPM No OSP-RPV-R801 "Reactor Pressure Vessel Leakage Test".

CERTIFICATE OF COMPLIANCE

We certify that the statements made in this Owner's Report are correct and this replacement *conforms to the rules of the ASME Code, Section XI.*
Type Code Symbol Stamp: Not Applicable
Certificate Of Authorization No.: Not Applicable
Expiration Date: Not Applicable

Prepared By Kuldip Singh - Program Lead Engineer (PLE) *Signed By* Kuldip Singh - Program Lead Engineer (PLE)

Date 6/30/05 *Date* 6/30/05

CERTIFICATE OF INSERVICE INSPECTION

I, the undersigned, holding a valid commission issued by the National Board of Boiler and Pressure Vessel Inspectors and the State of Washington *and employed by* Hartford Steam Boiler Of Connecticut of Hartford, Connecticut *have inspected the components described in this Owner's Report during the period* 5-6-2005 *to* 7-8-2005 *and state to the best of my knowledge and belief, the Owner has performed examinations and taken corrective measures described in this Owner's Report in accordance with the requirements of the ASME Code, Section XI.*
By signing this certificate neither the Inspector nor his employer makes any warranty, expressed or implied, concerning the examinations and corrective measures described in this Owner's Report. Furthermore, neither the Inspector nor his employer shall be liable in any manner for any personal injury or property damage or a loss of any kind arising from or connected with this inspection.

Inspector's Signature *Commissions* 1065542 A, B, N, I
National Board, State, and Endorsements

Date 7-8-2005

WOT No. 01090165 37

FORM N-2 NPT CERTIFICATE HOLDERS' DATA REPORT FOR NUCLEAR PART AND APPURTENANCES*

As required by the Provision of the ASME Code Rules, Section III, Div. I

6/30/05

1. Manufactured & Certified by : General Electric Company Nuclear Fuel & Components Manufacturing (GE NF & CM)

   2117 Castle Hayne Road, Wilmington, North Carolina 28401

   (Name and Address of NPT Certificate Holder)

   (b) Manufactured for : WNP 2 Richland, Washington 99352

   (Name and Address of N Certificate Holder for completed nuclear component)

2. Identification - Certificate Holder's S/N of Part : A9451 Nat'l Bd. No. N/A

   (a) Constructed According to Drawing No: 919D258G003 Rev 18 Dwg. Prepared by D. L. Peterson

   (b) Description of Part Inspected: Cylinder Tube & Flange

   (c) Applicable ASME Code: Section III , Edition 1974 , Addenda Date W75 , Case No. 1361-2 Class 1

3. REMARKS: Standard part for use with Reactor. Hydrostatically tested at 1825 psi. min.

   (Brief description of service for which component was designed)

Sheet 1 of 2

We certify that the statements in this report are correct and this vessel part or appurtenance as defined in the code conforms to the rules of construction of the ASME Code Section III. (The applicable Designed Specification and Stress Report are not the responsibility of the NPT Certificate Holder for parts. An NPT Certification Holder for appurtenances is responsible for furnishing a separate Design Specification and Stress Report if the appurtenance is not included in the component Design Specification and Stress Report).

Date: 06/27/95 Signed GE - NEBG - NF & CM - QA By

(NPT Certificate Holder) (SC QA Representive)

Certificate of Authorization Expires: 6/16/96 Certification of Authorization No. : NPT N - 1151

Certification of Design for Appurtenance

Design information on file at GE Company, San Jose, California

Stress analysis report on file at GE Company, San Jose, California

DC22A6253 Rev. 1
Design specification certified by Bjorn Haaberg Prof. Eng. State Calif. Reg. No. 15570

DC22A6254 Rev 1
Stress analysis report certified by Edward Yoshio Prof. Eng. State Calif. Reg. No. M018646

Certification of Shop Inspection

I, the undersigned, holding a valid commission by the National Board of Boiler and Pressure Inspectors and/or the State or Province of North Carolina and employed by Department of Labor of State of North Carolina have inspected the part of a pressure vessel described in this Partial Data Report on 5/16, 1995, and state that to the best of my knowledge and belief, the NPT Certificate Holder has constructed this part in accordance with the ASME Code Section III.

By signing this certificate, neither the Inspector nor his employer makes any warranty, expressed or implied, concerning the part described in the Partial Data Report. Furthermore, neither the Inspector nor his employer shall be liable in any manner for any personal injury or property damages or a loss of any kind arising from or connected with this inspection.

6/27, 1995 — Date

Inspector's Signature

NC 1231, Ohio, WC 3686 PA — National Board, State, Province And No.

*Supplemental sheets in form of lists, sketches or drawing may be used provided (1) size is 8-1/2" x 11", (2) information in 1-2 on this Data Report is included on each sheet, and (3) each sheet is numbered and number of sheets is recorded in Item 3. "REMARKS".

(07/90)

FORM N-2 (back)

Items 4-8 Incl. to be completed for single wall vessels, jackets vessels, or shells of heat exchangers.

4. Shell: Material _____ T.S. _____ Nominal Thickness ___ in. Corrosion Allowance ___ in. Dia. ___ ft. ___ in. Length ___ ft. ___ in.
(Kind & Spec. No.) (Min. of Range Specified)

5. Seams: Long _____ H.T.[1] _____ R.T. _____ Efficiency _____%
Girth _____ H.T.[1] _____ R.T. _____ No. of Courses _____

6. Heads: (a) Material _____ T.S. _____ (b) Material _____ T.S. _____

	Location (Top Bottom, Ends)	Thickness	Crown Radius	Knuckle Radius	Elliptical Ratio	Concial Apex Angle	Hemispherical Radius	Flat Diameter	Side to Press. (conv. or conc.)
(a)									
(b)									

If removable, bolts used _____ (Material, Spec. No., T.S. Size Number) Other fastening _____ (Describe or attach sketch)

7. Jacket Closure: _____
(Describe as ogee and weld, bar, etc. If bar give dimensions, if bolts, describe or sketch)

Drop Weight _____
Charpy Impact _____ ft-lb

8. Design pressure[2] 1250 psi at 575 °F at temp of _____ °F

Items 9 and 10 to be completed for tube sections

9. Tube Sheets: Stationary. Material _____ (Kind & Spec. No.) Dia. _____ (Subject to pressure) Thickness ___ in. Attachment _____ (Welded, Bolted)
Floating. Material _____ Dia. _____ Thickness ___ in. Attachment _____

0. Tubes: Material _____ O.D. _____ in. Thickness _____ inches or gage. Number _____ Type _____ (Str. or U)

Items 11 - 14 incl. to be completed for inner chambers of jacketed vessels, or channels of heat exchangers.

1. Shell: Material _____ T.S. _____ Nominal Thickness ___ in. Corrosion Allowance ___ in. Dia. ___ ft. ___ in. Length ___ ft. ___ in.
(Kind & Spec. No.) (Min. of Range Specified)

2. Seams: Long _____ H.T.[1] _____ R.T. _____ Efficiency _____%
Girth _____ H.T.[1] _____ R.T. _____ No. of Courses _____

1. Heads: (a) Material _____ T.S. _____ (b) Material _____ T.S. _____

	Location	Thickness	Crown Radius	Knuckle Radius	Elliptical Ratio	Concial Apex Angle	Hemispherical Radius	Flat Diameter	Side to Press. (conv. or conc.)
a)	Top, bottom, ends								
b)	Channel								

If removable, bolts used (a)_____ (b)_____ (c)_____ Other fastening _____ (Describe or attach sketch)

Drop Weight _____
Charpy Impact _____ ft-lb

. Design pressure[2] _____ psi at _____ °F at temp of _____ °F

tems below to be completed for all vessels where applicable.

. Safety Valve Outlets: Number _____ Size _____ Location _____

. Nozzles:

Purpose (Inlet, Outlet, Drain)	Number	Dia. or Size	Type	Material	Thickness	Reinforcement Material	How Attached

. Inspection Openings: Manholes, No. _____ Size _____ Location _____
Handholes, No. _____ Size _____ Location _____
Threaded, No. _____ Size _____ Location _____

Supports: Skirt _____ (Yes or No) Lugs _____ (Number) Legs _____ (Number) Other _____ (Describe) Attached _____ (Where & How)

1 - If Postweld Heat-Treated.
2 - List other internal or external pressure with coincident temperature when applicable.

WOT No. 01090165 37

FORM N-2 NPT CERTIFICATE HOLDERS' DATA REPORT FOR NUCLEAR PARTS AND APPURTENANCES*

As required by the Provision of the ASME Code Rules, Section III, Div. I

6/30/05

Manufactured & Certified by : General Electric Company Nuclear Fuel & Components Manufacturing (GE NF & CM)

2117 Castle Hayne Road, Wilmington, North Carolina 28401

(Name and Address of NPT Certificate Holder)

(b) Manufactured for : WNP 2 Richland, Washington 99352

(Name and Address of N Certificate Holder for completed nuclear component)

2. Identification - Certificate Holder's S/N of Part : A9451 Nat'l Bd. No. N/A

(a) Constructed According to Drawing No: 919D258G003 Rev 18 Dwg. Prepared by D. L. Peterson

(b) Description of Part Inspected: Cylinder Tube & Flange

(c) Applicable ASME Code: Section III , Edition 1974 , Addenda Date W'75 , Case No. 1361-2 Class 1

3. REMARKS: Standard part for use with Reactor. Hydrostatically tested at 1825 psi. min.

(Brief description of service for which component was designed)

1. Cap 166B9274P001
   SA182 - F316
   3/8" thick x 1 1/16" OD

2. Indicator Tube 167B4908P001
   SA312 - TP316
   3/4" sch 40 - seamless pipe
   0.113" wall thickness
   1.065" max. dia.

3. Plug 159A1176P001
   SA182 - F304
   1/4" thick x 0.812" OD

4. Flange 919D610P001 (719E474)
   SA182 - F304
   3.37" thick x 9 5/8" OD

5. Head 129B3539P005
   SA182 - F304
   7/8" thick x 2.875" dia.

6. Ring Flange 114B5122P002
   SA182 - F304
   1" thick x 5.0" OD x 1.75" ID

7. Cap Screw 117C4516P002
   SA193 - B6
   6 ea. 1/2" dia. on 4 1/8" bolt circle

8. Plug 175A7961P001
   SA182 - F304
   0.38" thick x 1.307" dia.

9. Nut 114B5460P001
   XM - 19 SA479
   1.30" thick x 2.62" dia.

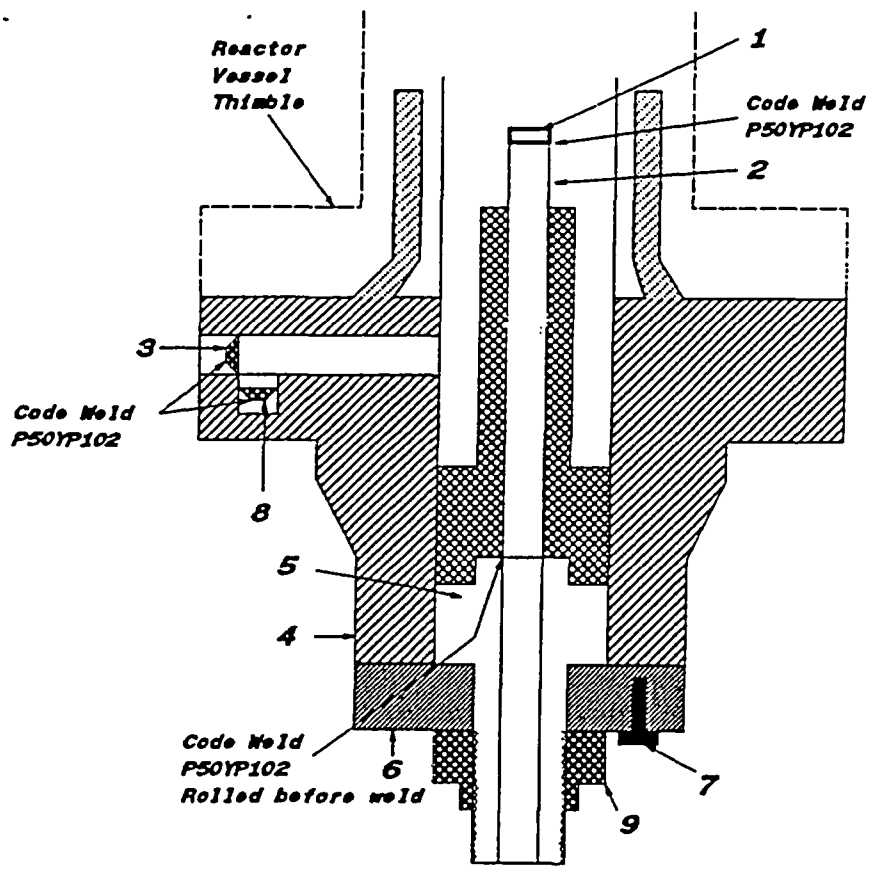

WOT No 01090165 38

ENERGY NORTHWEST
People·Vision·Solutions

FORM NIS-2 OWNER'S REPORT FOR REPAIRS OR REPLACEMENTS
As Required By The Provisions Of The ASME Code Section XI

Date: 06/29/05
Sheet: 1 Of 1
Unit: Not Applicable

1. **Owner:** Energy Northwest
   Address: Columbia Generating Station, North Power Plant Loop, Richland, Washington, 99352
2. **Plant:** Columbia Generating Station
   Address: Columbia Generating Station, North Power Plant Loop, Richland, Washington, 99352
3. (a) **Work Performed By:** Energy Northwest
   (b) **Repair Organization P.O. No, Job No, etc.:** Energy Northwest
   (c) **Type Code Symbol Stamp:** Not Applicable
   (d) **Certificate Of Authorization No.:** Not Applicable
   (e) **Expiration Date:** Not Applicable
4. **Identification Of System:** Control Rod Drive (CRD) System
5. (a) **Applicable Construction Code:** ASME Section III, Code Class 1, 1974 Edition with Winter 1975 Addenda, Code Case: 1361-2
   (b) **Applicable Edition Of ASME Section XI Utilized For Repairs Or Replacements:** 1989 Edition with no Addenda, Code Case: None
6. **Identification Of Components Repaired Or Replaced And Replacement Components**

Name Of Component	Name Of Manufacturer	Manufacturer's Serial No	National Board No	Other I.D.	Year Built	Repaired, Replaced Or Replacement	ASME Code Stamped (Yes Or No) Code Class
CRD	GE	A8722	N/A	N/A	1988	Replaced	Yes, Code Class 1
CRD	GE	A9481	N/A	N/A	1994	Replacement	Yes, Code Class 1

7. **Description Of Work Performed:** Replaced Control Rod Drive (CRD) assembly at Core Location 38-43. The replacement work was performed in accordance with plant procedure PPM No 10.5.7 "Control Rod Drive Removal And Replacement" as follows:

1) Removed all eight (8) existing cap screws from the CRD assembly bolted flanged connection.
2) Removed existing CRD assembly, Serial No A8722.
3) Performed VT-1 visual examination on all eight (8) new replacement cap screws. VT-1 visual examination results acceptable.
4) Installed replacement CRD assembly, Serial No A9481.
5) Installed eight (8) VT-1 visually examined new replacement cap screws for the CRD assembly bolted flanged connection.
6) Torqued the cap screws for the CRD assembly bolted flanged connection to the required torque values.
7) Performed VT-2 visual examination during pressure test on CRD assembly bolted flanged connection to confirm pressure boundary integrity of the joint. No leakage was observed during pressure test.

NOTES -

1) The replacement CRD assembly, Serial No A9481 is certified to comply with ASME Section III, Code Class 1, 1974 Edition with Winter 1975 Addenda requirements.
2) New replacement cap screws, SA-540 Gr. B23, Class 4, Heat No 14813.
3) VT-1 visual examination Report No 2RPV-020 for the new replacement cap screws.

WOT No 01090165 38

ENERGY NORTHWEST
People·Vision·Solutions

FORM NIS-2 OWNER'S REPORT FOR REPAIRS OR REPLACEMENTS (Back)

8 Tests Conducted: Hydrostatic ☐ *Pneumatic* ☐ *Nominal Operating Pressure* ☐ *Other* ☐

Test Pressure: 1020 Psig *Test Temperature:* 170° F

Component Design Pressure: 1250 Psig *Temperature:* 575° F

9. Remarks: 1) See attached N-2 Code Data Report for the replacement CRD assembly, Serial No A9481.
2) * Pressure test on the CRD bolted flanged connection - Test pressure of 1020 Psig and test temperature of 170° F recorded during ASME Section XI pressure test in accordance with PPM No OSP-RPV-R801 "Reactor Pressure Vessel Leakage Test".

CERTIFICATE OF COMPLIANCE

We certify that the statements made in this Owner's Report are correct and this replacement *conforms to the rules of the ASME Code, Section XI.*
Type Code Symbol Stamp: Not Applicable
Certificate Of Authorization No.: Not Applicable
Expiration Date: Not Applicable

Prepared By Kuldip Singh - Program Lead Engineer (PLE) *Signed By* Kuldip Singh - Program Lead Engineer (PLE)

Date 6/30/05 *Date* 6/30/05

CERTIFICATE OF INSERVICE INSPECTION

I, the undersigned, holding a valid commission issued by the National Board of Boiler and Pressure Vessel Inspectors and the State of Washington *and employed by* Hartford Steam Boiler Of Connecticut of Hartford, Connecticut *have inspected the components described in this Owner's Report during the period* 5-6-2005 *to* 7-8-2005 *and state to the best of my knowledge and belief, the Owner has performed examinations and taken corrective measures described in this Owner's Report in accordance with the requirements of the ASME Code, Section XI.*
By signing this certificate neither the Inspector nor his employer makes any warranty, expressed or implied, concerning the examinations and corrective measures described in this Owner's Report. Furthermore, neither the Inspector nor his employer shall be liable in any manner for any personal injury or property damage or a loss of any kind arising from or connected with this inspection.

Inspector's Signature *Commissions* 10655W A, B, N, I
National Board, State, and Endorsements

Date 7-8-2005

WOT. No. 01090165 38

FORM N-2 NPT CERTIFICATE HOLDERS' DATA REPORT FOR NUCLEAR PART AND APPURTENANCES*–
As required by the Provision of the ASME Code Rules, Section III, Div. I

6/30/05

1. Manufactured & Certified by : General Electric Company Nuclear Fuel & Components Manufacturing (GE NF & CM)

   2117 Castle Hayne Road, Wilmington, North Carolina 28401
   (Name and Address of NPT Certificate Holder)

   (b) Manufactured for : WNP 2 Richland, Washington 99352
   (Name and Address of N Certificate Holder for completed nuclear component)

2. Identification - Certificate Holder's S/N of Part : A9481 Nat'l Bd. No. N/A

   (a) Constructed According to Drawing No: 919D258G003 Rev 18 Dwg. Prepared by D. L. Peterson

   (b) Description of Part Inspected: Cylinder Tube & Flange

   (c) Applicable ASME Code: Section III , Edition 1974 , Addenda Date W'75 , Case No. 1361-2 Class 1

3. REMARKS: Standard part for use with Reactor. Hydrostatically tested at 1825 psi. min.
   (Brief description of service for which component was designed)

Sheet 1 of 2

We certify that the statements in this report are correct and this vessel part or appurtenance as defined in the code conforms to the rules of construction of the ASME Code Section III. (The applicable Designed Specification and Stress Report are not the responsibility of the NPT Certificate Holder for parts. An NPT Certification Holder for appurtenances is responsible for furnishing a separate Design Specification and Stress Report if the appurtenance is not included in the component Design Specification and Stress Report).

Date: 03/15/94 Signed GE-NEBG-NF & CM-QA By
(NPT Certificate Holder) (SC QA Representive)

Certificate of Authorization Expires: 6/16/96 Certification of Authorization No. : NPT N-1151

Certification of Design for Appurtenance

Design information on file at GE Company, San Jose, California

Stress analysis report on file at GE Company, San Jose, California

DC22A6253 Rev. 1
Design specification certified by Bjorn Haaberg Prof. Eng. State Calif. Reg. No. 15570

DC22A6254 Rev 1
Stress analysis report certified by Edward Yoshio Prof. Eng. State Calif. Reg. No. M018646

Certification of Shop Inspection

I, the undersigned, holding a valid commission by the National Board of Boiler and Pressure Inspectors and/or the State or Province of North Carolina and employed by Department of Labor of State of North Carolina have inspected the part of a pressure vessel described in this Partial Data Report on 3/17, 1994, and state that to the best of my knowledge and belief, the NPT Certificate Holder has constructed this part in accordance with the ASME Code Section III.
By signing this certificate, neither the Inspector nor his employer makes any warranty, expressed or implied, concerning the part described in the Partial Data Report. Furthermore, neither the Inspector nor his employer shall be liable in any manner for any personal injury or property damages or a loss of any kind arising from or connected with this inspection.

3/15, 1994	Jerome P Ewert	NC 1231, Ohio, WC 3686 PA
Date	Inspector's Signature	National Board, State, Province And No.

*Supplemental sheets in form of lists, sketches or drawing may be used provided (1) size is 8-1/2" x 11", (2) information in 1-2 on this Data Report is included on each sheet, and (3) each sheet is numbered and number of sheets is recorded in Item 3. "REMARKS".

(07/94)

FORM N-2 (back)

Items 4-8 Incl. to be completed for single wall vessels, jackets vessels, or shells of heat exchangers.

4. Shell: Material _____ T.S. _____ Nominal Thickness ___ in. Corrosion Allowance ___ in. Dia. ___ ft. ___ in. Length ___ ft. ___
(Kind & Spec. No.) (Min. of Range Specified)

5. Seams: Long _____ H.T.[1] _____ R.T. _____ Efficiency _____%
Girth _____ H.T.[1] _____ R.T. _____ No. of Courses _____

6. Heads: (a) Material _____ T.S. _____ (b) Material _____ T.S. _____

	Location (Top Bottom, Ends)	Thickness	Crown Radius	Knuckle Racius	Elliptical Ratio	Concial Apex Angle	Hemispherical Radius	Flat Diameter	Side to Press. (conv. or conc.)
(a)									
(b)									

If removable, bolts used _____ (Material, Spec. No., T.S. Size Number) Other fastening _____ (Describe or attach sketch)

7. Jacket Closure: _____
(Describe as ogee and weld, bar, etc. If bar give dimensions, if bolts, describe or sketch)

Drop Weight _____
Charpy Impact _____ ft-lb

8. Design pressure[2] 1250 psi at 575 °F at temp of _____ °F

Items 9 and 10 to be completed for tube sections

9. Tube Sheets: Stationary. Material _____ (Kind & Spec. No.) Dia. _____ (Subject to pressure) Thickness ___ in. Attachment _____ (Welded, Bolted)
Floating. Material _____ Dia. _____ Thickness ___ in. Attachment _____

10. Tubes: Material _____ O.D. _____ in. Thickness _____ Inches or gage. Number _____ Type _____ (Str. or U)

Items 11 - 14 incl. to be completed for inner chambers of jacketed vessels, or channels of heat exchangers.

11. Shell: Material _____ T.S. _____ Nominal Thickness ___ in. Corrosion Allowance ___ in. Dia. ___ ft. ___ in. Length ___ ft. ___
(Kind & Spec. No.) (Min. of Range Specified)

12. Seams: Long _____ H.T.[1] _____ R.T. _____ Efficiency _____%
Girth _____ H.T.[1] _____ R.T. _____ No. of Courses _____

13. Heads: (a) Material _____ T.S. _____ (b) Material _____ T.S. _____

	Location	Thickness	Crown Radius	Knuckle Radius	Elliptical Ratio	Concial Apex Angle	Hemispherical Radius	Flat Diameter	Side to Press. (conv. or conc.)
(a)	Top, bottom, ends								
(b)	Channel								

If removable, bolts used (a)_____ (b)_____ (c)_____ Other fastening _____ (Describe or attach sketch)

Drop Weight _____
Charpy Impact _____ ft-lb

14. Design pressure[2] _____ psi at _____ °F at temp of _____ °F

Items below to be completed for all vessels where applicable.

15. Safety Valve Outlets: Number _____ Size _____ Location _____

16. Nozzles:

Purpose (Inlet, Outlet, Drain)	Number	Dia. or Size	Type	Material	Thickness	Reinforcement Material	How Attached

17. Inspection Openings: Manholes, No. _____ Size _____ Location _____
Handholes, No. _____ Size _____ Location _____
Threaded, No. _____ Size _____ Location _____

18. Supports: Skirt _____ (Yes or No) Lugs _____ (Number) Legs _____ (Number) Other _____ (Describe) Attached _____ (Where & How)

1 - If Postweld Heat-Treated.
2 - List other internal or external pressure with coincident temperature when applicable.

FORM N-2 NPT CERTIFICATE HOLDERS' DATA REPORT FOR NUCLEAR PART AND APPURTENANCES*

As required by the Provision of the ASME Code Rules, Section III, Div. I

WOT No. 0109 0165 38

1. Manufactured & Certified by : General Electric Company Nuclear Fuel & Components Manufacturing (GE NF & CM)
   2117 Castle Hayne Road, Wilmington, North Carolina 28401
   (Name and Address of NPT Certificate Holder)

   (b) Manufactured for : WNP 2 Richland, Washington 99352
   (Name and Address of N Certificate Holder for completed nuclear component)

2. Identification - Certificate Holder's S/N of Part : A9481 Nat'l Bd. No. N/A

   (a) Constructed According to Drawing No: 919D258G003 Rev 18 Dwg. Prepared by D. L. Peterson

   (b) Description of Part Inspected: Cylinder Tube & Flange

   (c) Applicable ASME Code: Section III , Edition 1974 , Addenda Date W'75 , Case No. 1361-2 Class 1

3. REMARKS: Standard part for use with Reactor. Hydrostatically tested at 1825 psi. min.
   (Brief description of service for which component was designed)

1. Cap 166B9274P001
   SA182 - TP316
   3/8" thick x 1 1/16" OD

2. Indicator Tube 167B4908P001
   SA312 - TP316
   3/4" sch 40 - seamless pipe
   0.113" wall thickness
   1.065" max. dia.

3. Plug 159A1176P001
   SA182 - F304
   1/4" thick x 0.812" OD

4. Flange 919D610P001 (719E474)
   SA182 - F304
   3.37" thick x 9 5/8" OD

5. Head 129B3539P005
   SA182 - F304
   7/8" thick x 2.875" dia.

6. Ring Flange 114B5122P002
   SA182 - F304
   1" thick x 5.0" OD x 1.75" ID

7. Cap Screw 117C4516P002
   SA193 - B6
   6 ea. 1/2" dia. on 4 1/8" bolt circle

8. Plug 175A7961P001
   SA182 - F304
   0.38" thick x 1.307" dia.

9. Nut 114B5460P001
   XM - 19 SA479
   1.30" thick x 2.62" dia.

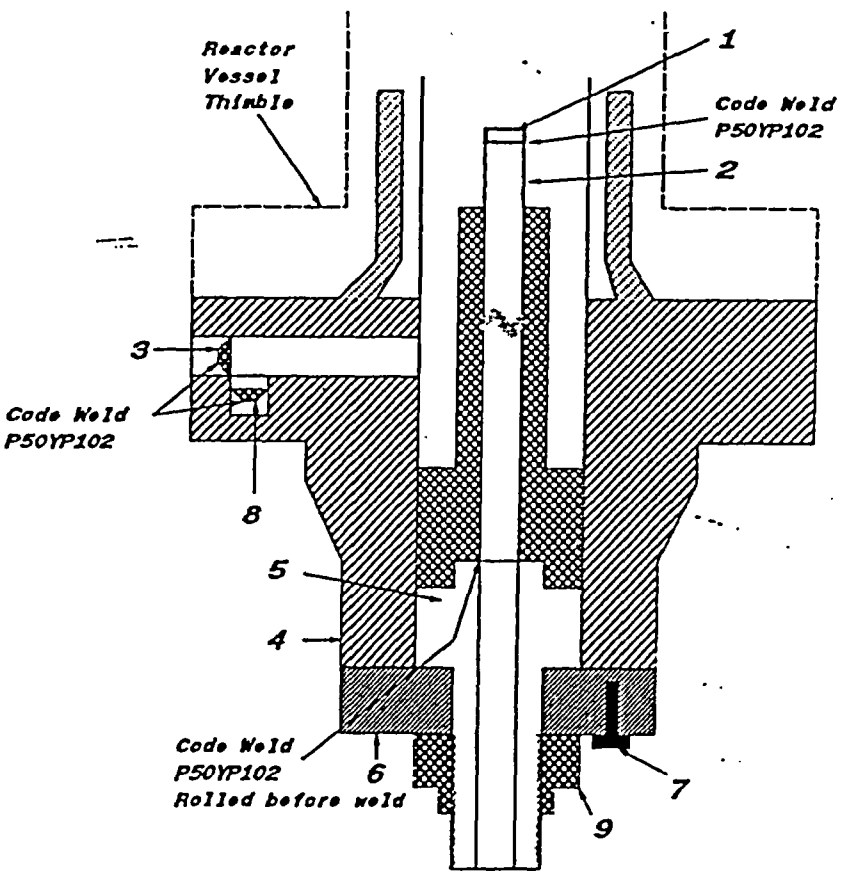

WOT No 01090165 39

ENERGY NORTHWEST
People·Vision·Solutions

FORM NIS-2 OWNER'S REPORT FOR REPAIRS OR REPLACEMENTS
As Required By The Provisions Of The ASME Code Section XI

Date: 06/29/05
Sheet: 1 Of 1
Unit: Not Applicable

1. **Owner:** Energy Northwest
   Address: Columbia Generating Station, North Power Plant Loop, Richland, Washington, 99352
2. **Plant:** Columbia Generating Station
   Address: Columbia Generating Station, North Power Plant Loop, Richland, Washington, 99352
3. **(a) Work Performed By:** Energy Northwest
   (b) Repair Organization P.O. No, Job No, etc.: Energy Northwest
   (c) Type Code Symbol Stamp: Not Applicable
   (d) Certificate Of Authorization No.: Not Applicable
   (e) Expiration Date: Not Applicable
4. **Identification Of System:** Control Rod Drive (CRD) System
5. **(a) Applicable Construction Code:** ASME Section III, Code Class 1, 1974 Edition with Winter 1975 Addenda, Code Case: 1361-2
   (b) Applicable Edition Of ASME Section XI Utilized For Repairs Or Replacements: 1989 Edition with no Addenda, Code Case: None
6. **Identification Of Components Repaired Or Replaced And Replacement Components**

Name Of Component	Name Of Manufacturer	Manufacturer's Serial No	National Board No	Other I.D.	Year Built	Repaired, Replaced Or Replacement	ASME Code Stamped (Yes Or No) Code Class
CRD	GE	6505	N/A	N/A	1973	Replaced	Yes, Code Class 1
CRD	GE	A9118*	N/A	N/A	1993	Replacement	Yes, Code Class 1

7. **Description Of Work Performed:** Replaced Control Rod Drive (CRD) assembly at Core Location 42-27*. The replacement work was performed in accordance with plant procedure PPM No 10.5.7 "Control Rod Drive Removal And Replacement" as follows:

1) Removed all eight (8) existing cap screws from the CRD assembly bolted flanged connection.
2) Removed existing CRD assembly, Serial No 6505.
3) Performed VT-1 visual examination on all eight (8) new replacement cap screws. VT-1 visual examination results acceptable.
4) Installed replacement CRD assembly, Serial No A9118*.
5) Installed eight (8) VT-1 visually examined new replacement cap screws for the CRD assembly bolted flanged connection.
6) Torqued the cap screws for the CRD assembly bolted flanged connection to the required torque values.

NOTES -

1) The replacement CRD assembly, Serial No A9118 is certified to comply with ASME Section III, Code Class 1, 1974 Edition with Winter 1975 Addenda requirements.
2) New replacement cap screws, SA-540 Gr. B23, Class 4, Heat No 14813.
3) VT-1 visual examination Report No 2RPV-020 for the new replacement cap screws.
4) * CRD assembly, Serial No A9118 at Core Location 42-27 was replaced for the second time in accordance with WOT No 01098605 04 due to CRD Serial No A9118 being stuck at position 00 following replacement under the WOT listed above.

WOT No 01090165 39

ENERGY NORTHWEST
People·Vision·Solutions

FORM NIS-2 OWNER'S REPORT FOR REPAIRS OR REPLACEMENTS (Back)

8 Tests Conducted: Hydrostatic ☐ Pneumatic ☐ Nominal Operating Pressure ☐ None ☒

Test Pressure: Psig — Test Temperature: °F

Component Design Pressure: Psig — Temperature: °F

9. Remarks: 1) See attached N-2 Code Data Report for the replacement CRD assembly, Serial No A9118.
2) * CRD assembly, Serial No A9118 at Core Location 42-27 was replaced for the second time in accordance with WOT No 01098605 04 due to CRD Serial No A9118 being stuck at position 00 following replacement under the WOT listed above. The pressure test requirements are covered under NIS-2 Owner's Report for WOT No 01098605 04.

CERTIFICATE OF COMPLIANCE

We certify that the statements made in this Owner's Report are correct and this replacement *conforms to the rules of the ASME Code, Section XI.*

Type Code Symbol Stamp: Not Applicable

Certificate Of Authorization No.: Not Applicable

Expiration Date: Not Applicable

Prepared By Kuldip Singh — Kuldip Singh - Program Lead Engineer (PLE)

Signed By Kuldip Singh — Kuldip Singh - Program Lead Engineer (PLE)

Date 6/30/05 — *Date* 6/30/05

CERTIFICATE OF INSERVICE INSPECTION

I, the undersigned, holding a valid commission issued by the National Board of Boiler and Pressure Vessel Inspectors and the State of Washington *and employed by* Hartford Steam Boiler Of Connecticut of Hartford, Connecticut *have inspected the components described in this Owner's Report during the period* 5-6-2005 *to* 7-8-2005 *and state to the best of my knowledge and belief, the Owner has performed examinations and taken corrective measures described in this Owner's Report in accordance with the requirements of the ASME Code, Section XI.*

By signing this certificate neither the Inspector nor his employer makes any warranty, expressed or implied, concerning the examinations and corrective measures described in this Owner's Report. Furthermore, neither the Inspector nor his employer shall be liable in any manner for any personal injury or property damage or a loss of any kind arising from or connected with this inspection.

Inspector's Signature — *Commissions* 10655W A, B, N, I — National Board, State, and Endorsements

Date 7-8-2005

(WOT NO. 01090165 39

FORM N-2 NPT CERTIFICATE HOLDERS' DATA REPORT FOR NUCLEAR PART AND APPURTENANCES*

As required by the Provision of the ASME Code Rules, Section III, Div. I

1. Manufactured & Certified by : General Electric Company Nuclear Fuel & Components Manufacturing (GE NF & CM)

   2117 Castle Hayne Road, Wilmington, North Carolina 28401

   (Name and Address of NPT Certificate Holder)

   (b) Manufactured for : WNP 2 Richland, Washington 99352

   (Name and Address of N Certificate Holder for completed nuclear component)

2. Identification - Certificate Holder's S/N of Part : A9118 Nat'l Bd. No. N/A

   (a) Constructed According to Drawing No: 919D258G003 Rev 17 Dwg. Prepared by D. L. Peterson

   (b) Description of Part Inspected: Cylinder Tube & Flange

   (c) Applicable ASME Code: Section III , Edition 1974 , Addenda Date W'75 , Case No. N207 1361-2 Class 1

3. REMARKS: Standard part for use with Reactor. Hydrostatically tested at 1825 psi, min.

   (Brief description of service for which component was designed)

Sheet 1 of 2

We certify that the statements in this report are correct and this vessel part or appurtenance as defined in the code conforms to the rules of construction of the ASME Code Section III. (The applicable Designed Specification and Stress Report are not the responsibility of the NPT Certificate Holder for parts. An NPT Certification Holder for appurtenances is responsible for furnishing a separate Design Specification and Stress Report if the appurtenance is not included in the component Design Specification and Stress Report).

Date: 01/28/93 Signed GE - NEBG - NF & CM - QA By

(NPT Certificate Holder) (SC QA Representive)

Certificate of Authorization Expires: 6/16/93 Certification of Authorization No. : NPT N - 1151

Certification of Design for Appurtenance

Design information on file at GE Company, San Jose, California

Stress analysis report on file at GE Company, San Jose, California

DC22A6253 Rev. 1
Design specification certified by Bjorn Haaberg Prof. Eng. State Calif. Reg. No. 15570

DC22A6254 Rev 1
Stress analysis report certified by Edward Yoshio Prof. Eng. State Calif. Reg. No. M018646

Certification of Shop Inspection

I, the undersigned, holding a valid commission by the National Board of Boiler and Pressure Inspectors and/or the State or Province of North Carolina and employed by Department of Labor of State of North Carolina have inspected the part of a pressure vessel described in this Partial Data Report on 1/26, 1993, and state that to the best of my knowledge and belief, the NPT Certificate Holder has constructed this part in accordance with the ASME Code Section III.

By signing this certificate, neither the Inspector nor his employer makes any warranty, expressed or implied, concerning the part described in the Partial Data Report. Furthermore, neither the Inspector nor his employer shall be liable in any manner for any personal injury or property damages or a loss of any kind arising from or connected with this inspection.

1/28, 1993 — Date

Inspector's Signature

NC 1231, Ohio, WC 3686 PA — National Board, State, Province And No.

*Supplemental sheets in form of lists, sketches or drawing may be used provided (1) size is 8-1/2" x 11", (2) information in 1-2 on this Data Report is included on each sheet, and (3) each sheet is numbered and number of sheets is recorded in Item 3. "REMARKS".

(07/90)

FORM N-2 (back)

Items 4-8 Incl. to be completed for single wall vessels, jackets vessels, or shells of heat exchangers.

4. Shell: Material _____ T.S. _____ Nominal Thickness ___ in. Corrosion Allowance ___ in. Dia. ___ ft. ___ in. Length ___ ft. ___ in
(Kind & Spec. No.) (Min. of Range Specified)

5. Seams: Long _____ H.T.[1] _____ R.T. _____ Efficiency _____%
Girth _____ H.T.[1] _____ R.T. _____ No. of Courses _____

6. Heads: (a) Material _____ T.S. _____ (b) Material _____ T.S. _____

	Location (Top Bottom, Ends)	Thickness	Crown Radius	Knuckle Radius	Elliptical Ratio	Concial Apex Angle	Hemispherical Radius	Flat Diameter	Side to Press. (conv. or conc.)
(a)									
(b)									

If removable, bolts used _____ (Material, Spec. No., T.S. Size Number) Other fastening _____ (Describe or attach sketch)

7. Jacket Closure: _____
(Describe as ogee and weld, bar, etc. If bar give dimensions, if bolts, describe or sketch)

Drop Weight _____
Charpy Impact _____ ft-lb

8. Design pressure[2] 1250 psi at 575 °F at temp of _____ °F

Items 9 and 10 to be completed for tube sections

9. Tube Sheets: Stationary. Material _____ (Kind & Spec. No.) Dia. _____ (Subject to pressure) Thickness ___ in. Attachment _____ (Welded, Bolted)
Floating. Material _____ Dia. _____ Thickness ___ in. Attachment _____

10. Tubes: Material _____ O.D. _____ in. Thickness _____ inches or gage. Number _____ Type _____ (Str. or U)

Items 11 - 14 incl. to be completed for inner chambers of jacketed vessels, or channels of heat exchangers.

11. Shell: Material _____ T.S. _____ Nominal Thickness ___ in. Corrosion Allowance ___ in. Dia. ___ ft. ___ in. Length ___ ft. ___ in.
(Kind & Spec. No.) (Min. of Range Specified)

12. Seams: Long _____ H.T.[1] _____ R.T. _____ Efficiency _____%
Girth _____ H.T.[1] _____ R.T. _____ No. of Courses _____

13. Heads: (a) Material _____ T.S. _____ (b) Material _____ T.S. _____

	Location	Thickness	Crown Radius	Knuckle Radius	Elliptical Ratio	Concial Apex Angle	Hemispherical Radius	Flat Diameter	Side to Press. (conv. or conc.)
(a)	Top, bottom, ends								
(b)	Channel								

If removable, bolts used (a)_____ (b)_____ (c)_____ Other fastening _____ (Describe or attach sketch)

Drop Weight _____
Charpy Impact _____ ft-lb

14. Design pressure[2] _____ psi at _____ °F at temp of _____ °F

Items below to be completed for all vessels where applicable.

15. Safety Valve Outlets: Number _____ Size _____ Location _____

16. Nozzles:

Purpose (Inlet, Outlet, Drain)	Number	Dia. or Size	Type	Material	Thickness	Reinforcement Material	How Attached

17. Inspection Openings: Manholes, No. _____ Size _____ Location _____
Handholes, No. _____ Size _____ Location _____
Threaded, No. _____ Size _____ Location _____

18. Supports: Skirt _____ (Yes or No) Lugs _____ (Number) Legs _____ (Number) Other _____ (Describe) Attached _____ (Where & How)

1 - If Postweld Heat-Treated.
2 - List other internal or external pressure with coincident temperature when applicable.

WOT No. 01090165 39

FORM N-2 NPT CERTIFICATE HOLDERS' DATA REPORT FOR NUCLEAR PART AND APPURTENANCES*

As required by the Provision of the ASME Code Rules, Section III, Div. I

6/30/05

1. Manufactured & Certified by : General Electric Company Nuclear Fuel & Components Manufacturing (GE NF & CM)

   2117 Castle Hayne Road, Wilmington, North Carolina 28401

   (Name and Address of NPT Certificate Holder)

   (b) Manufactured for : WNP 2 Richland, Washington 99352

   (Name and Address of N Certificate Holder for completed nuclear component)

2. Identification - Certificate Holder's S/N of Part : A9118 Nat'l Bd. No. N/A

   (a) Constructed According to Drawing No: 919D258G003 Rev 17 Dwg. Prepared by D. L. Peterson

   (b) Description of Part Inspected: Cylinder Tube & Flange

   (c) Applicable ASME Code: Section III , Edition 1974 , Addenda Date W75 , Case No. N207 1361-2 Class 1

3. REMARKS: Standard part for use with Reactor. Hydrostatically tested at 1825 psi. min.

   (Brief description of service for which component was designed)

1. Cap 166B9274P001
   SA182 - F304
   3/8" thick x 1 1/16" OD

2. Indicator Tube 166B9313P001
   SA312 - TP316
   3/4" sch 40 - seamless pipe
   0.113" wall thickness
   1.065" max. dia.

3. Plug 159A1176P001
   SA182 - F304
   1/4" thick x 0.812" OD

4. Flange 919D610P001 (719E474)
   SA182 - F304
   3.37" thick x 9 5/8" OD

5. Base 137C5311P001
   SA182 - F304
   7/8" thick x 2.875" dia.

6. Ring Flange 114B5122P002, P003
   137C8151P001, P002
   SA182 - F304
   1" thick x 5.0" OD x 1.75" ID

7. Cap Screw 117C4516P002
   SA193 - B6
   6 ea. 1/2" dia. on 4 1/8" bolt circle

8. Plug 175A7961P001
   SA182 - F304
   0.38" thick x 1.307" dia.

9. Nut 137C5934P001
   XM - 19 SA479
   1.30" thick x 2.62" dia.

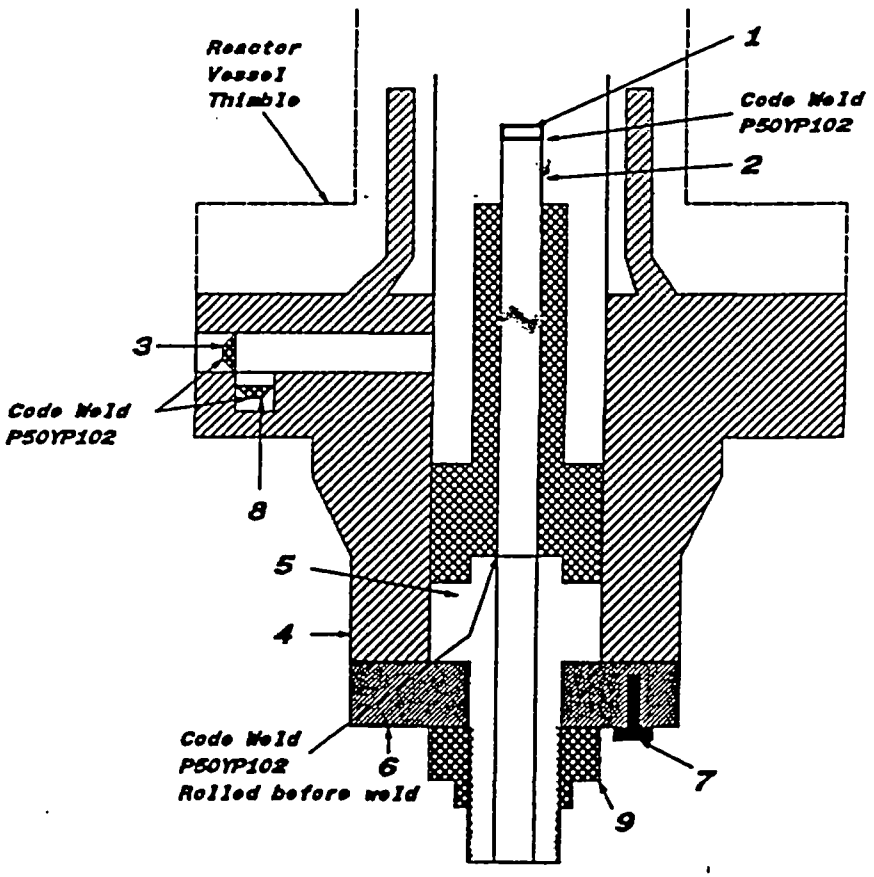

WOT No 01090165 40

ENERGY NORTHWEST
People·Vision·Solutions

FORM NIS-2 OWNER'S REPORT FOR REPAIRS OR REPLACEMENTS
As Required By The Provisions Of The ASME Code Section XI

1. Owner: Energy Northwest
Address: Columbia Generating Station, North Power Plant Loop, Richland, Washington, 99352
2. Plant: Columbia Generating Station
Address: Columbia Generating Station, North Power Plant Loop, Richland, Washington, 99352

Date: 06/30/05
Sheet: 1 Of 1
Unit: Not Applicable

3. (a) Work Performed By: Energy Northwest
(b) Repair Organization P.O. No, Job No, etc.: Energy Northwest
(c) Type Code Symbol Stamp: Not Applicable
(d) Certificate Of Authorization No.: Not Applicable
(e) Expiration Date: Not Applicable
4. Identification Of System: Control Rod Drive (CRD) System
5. (a) Applicable Construction Code: ASME Section III, Code Class 1, 1974 Edition with no Addenda, Code Case: None
(b) Applicable Edition Of ASME Section XI Utilized For Repairs Or Replacements: 1989 Edition with no Addenda, Code Case: None
6. Identification Of Components Repaired Or Replaced And Replacement Components

Name Of Component	Name Of Manufacturer	Manufacturer's Serial No	National Board No	Other I.D.	Year Built	Repaired, Replaced Or Replacement	ASME Code Stamped (Yes Or No) Code Class
CRD	GE	6492	N/A	N/A	1974	Replaced	Yes, Code Class 1
CRD	GE	7048	N/A	N/A	1974	Replacement	Yes, Code Class 1

7. Description Of Work Performed: Replaced Control Rod Drive (CRD) assembly at Core Location 42-55. The replacement work was performed in accordance with plant procedure PPM No 10.5.7 "Control Rod Drive Removal And Replacement" as follows:

1) Removed all eight (8) existing cap screws from the CRD assembly bolted flanged connection.
2) Removed existing CRD assembly, Serial No 6492.
3) Performed VT-1 visual examination on all eight (8) new replacement cap screws. VT-1 visual examination results acceptable.
4) Installed replacement CRD assembly, Serial No 7048.
5) Installed eight (8) VT-1 visually examined new replacement cap screws for the CRD assembly bolted flanged connection.
6) Torqued the cap screws for the CRD assembly bolted flanged connection to the required torque values.
7) Performed VT-2 visual examination during pressure test on CRD assembly bolted flanged connection to confirm pressure boundary integrity of the joint. No leakage was observed during pressure test.

NOTES

1) The replacement CRD assembly, Serial No 7048 is certified to comply with ASME Section III, Code Class 1, 1974 Edition with no Addenda requirements.
2) New replacement cap screws, SA-540 Gr. B23, Class 4, Heat No 14813.
3) VT-1 visual examination Report No 2RPV-020 for the new replacement cap screws.

WOT No 01090165 40

ENERGY NORTHWEST
People · Vision · Solutions

FORM NIS-2 OWNER'S REPORT FOR REPAIRS OR REPLACEMENTS (Back)

8 Tests Conducted: Hydrostatic ☐ *Pneumatic* ☐ *Nominal Operating Pressure* ☐ *Other* ☒

Test Pressure: 1020 Psig *Test Temperature:* 170° F

Component Design Pressure: 1250 Psig *Temperature:* 575° F

9. Remarks: 1) See attached N-2 Code Data Report for the replacement CRD assembly, Serial No 7048.
2) * Pressure test on the CRD bolted flanged connection - Test pressure of 1020 Psig and test temperature of 170° F recorded during ASME Section XI pressure test in accordance with PPM No OSP-RPV-R801 "Reactor Pressure Vessel Leakage Test".

CERTIFICATE OF COMPLIANCE

We certify that the statements made in this Owner's Report are correct and this replacement *conforms to the rules of the ASME Code, Section XI.*

Type Code Symbol Stamp: Not Applicable

Certificate Of Authorization No.: Not Applicable

Expiration Date: Not Applicable

Prepared By Kuldip Singh - Program Lead Engineer (PLE) *Signed By* Kuldip Singh - Program Lead Engineer (PLE)

Date 7/1/05 *Date* 7/1/05

CERTIFICATE OF INSERVICE INSPECTION

I, the undersigned, holding a valid commission issued by the National Board of Boiler and Pressure Vessel Inspectors and the State of Washington *and employed by* Hartford Steam Boiler Of Connecticut of Hartford, Connecticut *have inspected the components described in this Owner's Report during the period* 5-6-2005 *to* 7-11-2005 *and state to the best of my knowledge and belief, the Owner has performed examinations and taken corrective measures described in this Owner's Report in accordance with the requirements of the ASME Code, Section XI.*

By signing this certificate neither the Inspector nor his employer makes any warranty, expressed or implied, concerning the examinations and corrective measures described in this Owner's Report. Furthermore, neither the Inspector nor his employer shall be liable in any manner for any personal injury or property damage or a loss of any kind arising from or connected with this inspection.

Inspector's Signature *Commissions* 10655 W A, B, N, I
National Board, State, and Endorsements

Date _____

WOT NO. 01090165 40

FORM N-2 MANUFACTURERS DATA REPORT FOR NUCLEAR PART AND APPURTENANCES

As required by the Provisions of the ASME Code Rules

Relaxing Stops 7/1/05

1. (a) Manufactured by General Electric Company, Castle Hayne Rd., Wilmington, N.C.
(Name and address of Manufacturer of part)

(b) Manufactured for General Electric Company, San Jose, California
(Name and address of Manufacturer of completed nuclear component)

2. Identification-Manufacturer's Serial No. of Part 7048 Nat'l Bd. No. _____

(a) Constructed According to Drawing No. 761E387G2 Drawing Prepared by D. L. Peterson

(b) Description of Part Inspected Control Rod Drive, Model #7RDB144 C1

(c) Applicable ASME Code: Section III, Edition 1974, Addenda date None, Case No. _____ Class _____

3. Remarks: Standard part for use with Reactor. Hydrostatically tested at 1820 psi minimum
(Brief description of service for which component was designed)

We certify that the statements made in this report are correct and this vessel part or appurtenance as defined in the Code conforms to the rules of construction of the ASME Code Section III.
(The applicable Design Specification and Stress Report are not the responsibility of the part Manufacturer. An appurtenance Manufacturer is responsible for furnishing a separate Design Specification and Stress Report if the appurtenance is not included in the component Design Specification and Stress Report.)

Date November 27, 19 74 Signed GE, BWRSD - REM (Manufacturer) By [signature]

Certificate of Authorization Expires June 20, 1975 Certificate of Authorization No. NPT - 462

CERTIFICATION OF DESIGN FOR APPURTENANCE (when applicable)

Design information on file at General Electric Co., BWRSD-REM, Castle Hayne Rd. Wilmington

Stress analysis report on file at General Electric Co., BWRSD-REM, Castle Hayne Rd., Wilmington

Design specifications certified by Vernon W. Pence Prof. Eng. State Calif. Reg. No. 14488

Stress analysis report certified by Vernon W. Pence Prof. Eng. State Calif. Reg. No. 14488

CERTIFICATE OF SHOP INSPECTION

I, the undersigned, holding a valid commission issued by the National Board of Boiler and Pressure Vessel Inspectors and/or the State or Province of North Carolina and employed by Department of Labor of State of North Carolina have inspected the part of a pressure vessel described in this Manufacturer's Partial Data Report on November 25, 1974, and state that to the best of my knowledge and belief, the Manufacturer has constructed this part in accordance with the ASME Code Section III.
By signing this certificate, neither the Inspector nor his employer makes any warranty, expressed or implied, concerning the part described in this Manufacturer's Partial Data Report. Furthermore, neither the Inspector nor his employer shall be liable in any manner for any personal injury or property damage or a loss of any kind arising from or connected with this inspection.

Date November 27, 19 74

[signature] (Inspector's Signature) Commissions NC 779, PA, WC 2L60, Ohio (National Board, State, Province and No.)

FORM N-2 (back)

Items 4–8 Incl. to be completed for single wall vessels, jackets of jacketed vessels, or shells of heat exchangers.

4. Shell: Material _____ (Kind & Spec. No.) T.S. _____ (Min. of Range Specified) Nominal Thickness ___ in. Corrosion Allowance ___ in. Dia. ___ ft. ___ in. Length ___ ft. ___ in.

5. Seams: Long _____ H.T.[1] _____ R.T. _____ Efficiency _____ %

Girth _____ H.T.[1] _____ R.T. _____ No. of Courses _____

6. Heads: (a) Material _____ T.S. _____ (b) Material _____ T.S. _____

	Location (Top, bottom, ends)	Thickness	Crown Radius	Knuckle Radius	Elliptical Ratio	Conical Apex Angle	Hemispherical Radius	Flat Diameter	Side to Press. (Conv. or Conc.)
(a)									
(b)									

If removable, bolts used _____ (Material, Spec. No., T.S., Size, Number) Other fastening _____ (Describe or attach sketch)

7. Jacket Closure: _____ (Describe as ogee and weld, bar, etc. If bar give dimensions, if bolted, describe or sketch)

8. Design pressure[2] 1250 psi at 575 °F Drop Weight _____ Charpy Impact _____ ft-lb at temp. of _____ °F

Items 9 and 10 to be completed for tube sections

9. Tube Sheets: Stationary. Material _____ (Kind & Spec. No.) Dia. _____ (Subject to pressure) Thickness ___ in. Attachment _____ (Welded, Bolted)

Floating. Material _____ Dia. _____ Thickness ___ in. Attachment _____

10. Tubes: Material _____ O.D. ___ in. Thickness _____ inches or gage. Number _____ Type _____ (Str. or U)

Items 11–14 incl. to be completed for inner chambers of jacketed vessels, or channels of heat exchangers.

11. Shell: Material _____ (Kind & Spec. No.) T.S. _____ (Min. of Range Specified) Nominal Thickness ___ in. Corrosion Allowance ___ in. Dia. ___ ft. ___ in. Length ___ ft. ___ in.

12. Seams: Long _____ H.T.[1] _____ R.T. _____ Efficiency _____ %

Girth _____ H.T.[1] _____ R.T. _____ No. of Courses _____

13. Heads (a) Material _____ T.S. _____ (b) Material _____ T.S. _____

	Location	Thickness	Crown Radius	Knuckle Radius	Elliptical Ratio	Conical Apex Angle	Hemispherical Radius	Flat Diameter	Side to Press. (Conv. or Conc.)
(a)	Top, bottom, ends								
(b)	Channel								

If removable, bolts used (a) _____ (b) _____ (c) _____ Other fastening _____ (Describe or attach sketch)

14. Design pressure[2] _____ psi at _____ °F Drop Weight _____, Charpy Impact _____ ft-lb at temp. of _____ °F

Items below to be completed for all vessels where applicable.

15. Safety Valve Outlets: Number _____ Size _____ Location _____

16. Nozzles:

Purpose (Inlet, Outlet, Drain)	Number	Dia. or Size	Type	Material	Thickness	Reinforcement Material	How Attached

17. Inspection Openings: Manholes, No. _____ Size _____ Location _____
Handholes, No. _____ Size _____ Location _____
Threaded, No. _____ Size _____ Location _____

18. Supports: Skirt _____ (Yes or No) Lugs _____ (Number) Legs _____ (Number) Other _____ (Describe) Attached _____ (Where & How)

[1] If Postweld Heat-Treated.
[2] List other internal or external pressure with coincident temperature when applicable.

WOT No. 0109 0165 40

CONTROL ROD DRIVE
761E387G1/G2

S/N 7048

Rudolph Sipes
7/1/05

1. Cap 167A2343P1
   (167A2343)
   SA182-F304
   3/8 thick x 1 1/16 OD

2. Indicator Tube 104B1336P1
   SA312-TP316
   3/4 sch 40-seamless pipe
   0.113 wall thickness
   1.065 max. dia.

3. Plug 159A1176P1
   SA182-F304
   1/4 thick x 0.812 OD

4. Flange 919D610P1 (719E474)
   SA182-F304
   3.37 thick x 9 5/8 OD
   neck 1 1/16 thick x 5.0 OD
   2.875 ID

5. Head 129B3539P1
   SA182-F304
   7/8 thick x 2.875 Dia.

6. Ring Flange 114B5122P2
   SA182-F304
   1" thick x 5.0 OD x 1.75 ID

7. Cap Screw 117C4516P2
   SA193-B6
   6 ea. 1/2 dia. on 4 1/8 bolt circle

8. Plug 175A7961P1
   SA182-F304
   0.38 thick x 1.307 dia.

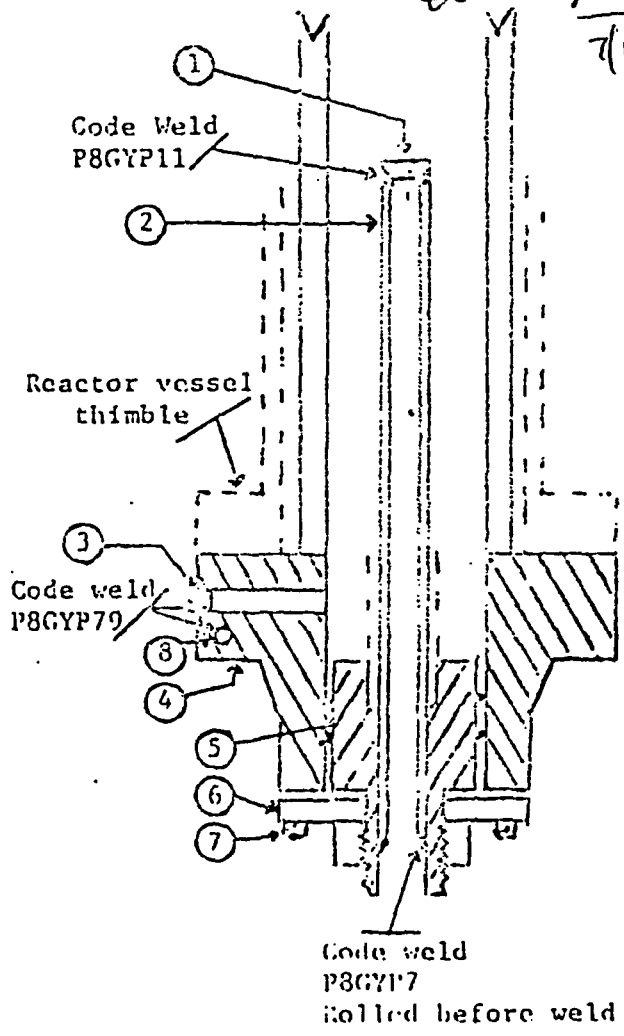

ATTACHMENT TO
FORM N-2 MANUFACTURER'S DATA REPORT

WOT No 01090165 41

ENERGY NORTHWEST
People·Vision·Solutions

FORM NIS-2 OWNER'S REPORT FOR REPAIRS OR REPLACEMENTS
As Required By The Provisions Of The ASME Code Section XI

1. Owner: Energy Northwest
Address: Columbia Generating Station, North Power Plant Loop, Richland, Washington, 99352
2. Plant: Columbia Generating Station
Address: Columbia Generating Station, North Power Plant Loop, Richland, Washington, 99352

Date: 06/30/05
Sheet: 1 Of 1
Unit: Not Applicable

3. (a) Work Performed By: Energy Northwest
(b) Repair Organization P.O. No, Job No, etc.: Energy Northwest
(c) Type Code Symbol Stamp: Not Applicable
(d) Certificate Of Authorization No.: Not Applicable
(e) Expiration Date: Not Applicable
4. Identification Of System: Control Rod Drive (CRD) System
5. (a) Applicable Construction Code: ASME Section III, Code Class 1, 1974 Edition with Winter 1975 Addenda, Code Case: 1361-2
(b) Applicable Edition Of ASME Section XI Utilized For Repairs Or Replacements: 1989 Edition with no Addenda, Code Case: None
6. Identification Of Components Repaired Or Replaced And Replacement Components

Name Of Component	Name Of Manufacturer	Manufacturer's Serial No	National Board No	Other I.D.	Year Built	Repaired, Replaced Or Replacement	ASME Code Stamped (Yes Or No) Code Class
CRD	GE	6671	N/A	N/A	1975	Replaced	Yes, Code Class 1
CRD	GE	A9419	N/A	N/A	1996	Replacement	Yes, Code Class 1

7. Description Of Work Performed: Replaced Control Rod Drive (CRD) assembly at Core Location 42-59. The replacement work was performed in accordance with plant procedure PPM No 10.5.7 "Control Rod Drive Removal And Replacement" as follows:

1) Removed all eight (8) existing cap screws from the CRD assembly bolted flanged connection.
2) Removed existing CRD assembly, Serial No 6671.
3) Performed VT-1 visual examination on all eight (8) new replacement cap screws. VT-1 visual examination results acceptable.
4) Installed replacement CRD assembly, Serial No A9419.
5) Installed eight (8) VT-1 visually examined new replacement cap screws for the CRD assembly bolted flanged connection.
6) Torqued the cap screws for the CRD assembly bolted flanged connection to the required torque values.
7) Performed VT-2 visual examination during pressure test on CRD assembly bolted flanged connection to confirm pressure boundary integrity of the joint. No leakage was observed during pressure test.

NOTES -

1) The replacement CRD assembly, Serial No A9419 is certified to comply with ASME Section III, Code Class 1, 1974 Edition with Winter 1975 Addenda requirements.
2) New replacement cap screws, SA-540 Gr. B23, Class 4, Heat No 14813.
3) VT-1 visual examination Report No 2RPV-020 for the new replacement cap screws.

WOT No 01090165 41

ENERGY NORTHWEST
People·Vision·Solutions

FORM NIS-2 OWNER'S REPORT FOR REPAIRS OR REPLACEMENTS (Back)

8 Tests Conducted: Hydrostatic [ ] *Pneumatic* [ ] *Nominal Operating Pressure* [ ] *Other* [•]

Test Pressure: 1020 Psig *Test Temperature:* 170° F

Component Design Pressure: 1250 Psig *Temperature:* 575° F

9. Remarks: 1) See attached N-2 Code Data Report for the replacement CRD assembly, Serial No A9419.
2) * Pressure test on the CRD bolted flanged connection - Test pressure of 1020 Psig and test temperature of 170° F recorded during ASME Section XI pressure test in accordance with PPM No OSP-RPV-R801 "Reactor Pressure Vessel Leakage Test".

CERTIFICATE OF COMPLIANCE

We certify that the statements made in this Owner's Report are correct and this replacement *conforms to the rules of the ASME Code, Section XI.*
Type Code Symbol Stamp: Not Applicable
Certificate Of Authorization No.: Not Applicable
Expiration Date: Not Applicable

Prepared By Kuldip Singh - Program Lead Engineer (PLE) *Signed By* Kuldip Singh - Program Lead Engineer (PLE)

Date 7/1/05 *Date* 7/1/05

CERTIFICATE OF INSERVICE INSPECTION

I, the undersigned, holding a valid commission issued by the National Board of Boiler and Pressure Vessel Inspectors and the State of Washington *and employed by* Hartford Steam Boiler Of Connecticut of Hartford, Connecticut *have inspected the components described in this Owner's Report during the period* 5-6-2005 *to* 7-8-2005 *and state to the best of my knowledge and belief, the Owner has performed examinations and taken corrective measures described in this Owner's Report in accordance with the requirements of the ASME Code, Section XI.*
By signing this certificate neither the Inspector nor his employer makes any warranty, expressed or implied, concerning the examinations and corrective measures described in this Owner's Report. Furthermore, neither the Inspector nor his employer shall be liable in any manner for any personal injury or property damage or a loss of any kind arising from or connected with this inspection.

Inspector's Signature *Commissions* 10655W A, B, N, I
National Board, State, and Endorsements

Date 7-8-2005

WOT No. 01090165 41

FORM N-2 NPT CERTIFICATE HOLDERS' DATA REPORT FOR NUCLEAR PART AND APPURTENANCES*

As required by the Provision of the ASME Code Rules, Section III, Div. I

7/1/05

1. Manufactured & Certified by : General Electric Company Nuclear Energy (GE-NE)
   3901 Castle Hayne Road, Wilmington, North Carolina 28401
   (Name and Address of NPT Certificate Holder)

   (b) Manufactured for : WNP 2 Richland, Washington 99352
   (Name and Address of N Certificate Holder for completed nuclear component)

2. Identification - Certificate Holder's S/N of Part : A9419 Nat'l Bd. No. N/A

   (a) Constructed According to Drawing No: 919D258G003 Rev 18 Dwg. Prepared by D. L. Peterson

   (b) Description of Part Inspected: Cylinder Tube & Flange

   (c) Applicable ASME Code: Section III , Edition 1974 , Addenda Date W'75 , Case No. 1361-2 Class 1

3. REMARKS: Standard part for use with Reactor. Hydrostatically tested at 1825 psi. min.
   (Brief description of service for which component was designed)

Sheet 1 of 2

We certify that the statements in this report are correct and this vessel part or appurtenance as defined in the code conforms to the rules of construction of the ASME Code Section III. (The applicable Designed Specification and Stress Report are not the responsibility of the NPT Certificate Holder for parts. An NPT Certification Holder for appurtenances is responsible for furnishing a separate Design Specification and Stress Report if the appurtenance is not included in the component Design Specification and Stress Report).

Date: 04/02/96 Signed GE-NE (NPT Certificate Holder) By C.S. Bazzett (SC QA Representive)

Certificate of Authorization Expires: 6/16/96 Certification of Authorization No. : NPT N - 1151

Certification of Design for Appurtenance

Design information on file at GE Company, San Jose, California

Stress analysis report on file at GE Company, San Jose, California

DC22A6253 Rev. 2
Design specification certified by B.N. Sridhar Prof. Eng. State Calif. Reg. No. 18345

DC22A6254 Rev 1
Stress analysis report certified by Edward Yoshio Prof. Eng. State Calif. Reg. No. M018646

Certification of Shop Inspection

I, the undersigned, holding a valid commission by the National Board of Boiler and Pressure Inspectors and/or the State or Province of North Carolina and employed by Department of Labor of State of North Carolina have inspected the part of a pressure vessel described in this Partial Data Report on 1/14, 1995, and state that to the best of my knowledge and belief, the NPT Certificate Holder has constructed this part in accordance with the ASME Code Section III.
By signing this certificate, neither the Inspector nor his employer makes any warranty, expressed or implied, concerning the part described in the Partial Data Report. Furthermore, neither the Inspector nor his employer shall be liable in any manner for any personal injury or property damages or a loss of any kind arising from or connected with this inspection.

4/2, 1996	Jerome P Ewen	NC 1231, Ohio, WC 3686 PA
Date	Inspector's Signature	National Board, State, Province And No.

*Supplemental sheets in form of lists, sketches or drawing may be used provided (1) size is 8-1/2" x 11", (2) information in 1-2 on this Data Report is included on each sheet, and (3) each sheet is numbered and number of sheets is recorded in Item 3. "REMARKS".

(07/90)

FORM N-2 (back)

Items 4-8 Incl. to be completed for single wall vessels, jackets vessels, or shells of heat exchangers.

4. Shell: Material _____ T.S. _____ Nominal Thickness ___ in. Corrosion Allowance ___ in. Dia. ___ ft. ___ in. Length ___ ft. ___
(Kind & Spec. No.) (Min. of Range Specified)

5. Seams: Long _____ H.T.[1] _____ R.T. _____ Efficiency _____%
Girth _____ H.T.[1] _____ R.T. _____ No. of Courses _____

6. Heads: (a) Material _____ T.S. _____ (b) Material _____ T.S. _____

	Location (Top Bottom, Ends)	Thickness	Crown Radius	Knuckle Radius	Elliptical Ratio	Concial Apex Angle	Hemispherical Radius	Flat Diameter	Side to Press. (conv. or conc.)
(a)									
(b)									

If removable, bolts used _____ (Material, Spec. No., T.S. Size Number) Other fastening _____ (Describe or attach sketch)

7. Jacket Closure: _____
(Describe as ogee and weld, bar, etc. If bar give dimensions, if bolts, describe or sketch)

Drop Weight _____
Charpy Impact _____ ft-lb

8. Design pressure[2] 1250 psi at 575 °F at temp of _____ °F

Items 9 and 10 to be completed for tube sections

9. Tube Sheets: Stationary. Material _____ (Kind & Spec. No.) Dia. _____ (Subject to pressure) Thickness ___ in. Attachment _____ (Welded, Bolted)
Floating. Material _____ Dia. _____ Thickness ___ in. Attachment _____

10. Tubes: Material _____ O.D. _____ in. Thickness _____ inches or gage. Number _____ Type _____ (Str. or U)

Items 11 - 14 incl. to be completed for inner chambers of jacketed vessels, or channels of heat exchangers.

11. Shell: Material _____ T.S. _____ Nominal Thickness ___ in. Corrosion Allowance ___ in. Dia. ___ ft. ___ in. Length ___ ft. ___
(Kind & Spec. No.) (Min. of Range Specified)

12. Seams: Long _____ H.T.[1] _____ R.T. _____ Efficiency _____%
Girth _____ H.T.[1] _____ R.T. _____ No. of Courses _____

13. Heads: (a) Material _____ T.S. _____ (b) Material _____ T.S. _____

	Location	Thickness	Crown Radius	Knuckle Radius	Elliptical Ratio	Concial Apex Angle	Hemispherical Radius	Flat Diameter	Side to Press. (conv. or conc.)
(a)	Top, bottom, ends								
(b)	Channel								

If removable, bolts used (a)_____ (b)_____ (c)_____ Other fastening _____ (Describe or attach sketch)

Drop Weight _____
Charpy Impact _____ ft-lb

14. Design pressure[2] _____ psi at _____ °F at temp of _____ °F

Items below to be completed for all vessels where applicable.

15. Safety Valve Outlets: Number _____ Size _____ Location _____

16. Nozzles:

Purpose (Inlet, Outlet, Drain)	Number	Dia. or Size	Type	Material	Thickness	Reinforcement Material	How Attached

17. Inspection Openings: Manholes, No. _____ Size _____ Location _____
Handholes, No. _____ Size _____ Location _____
Threaded, No. _____ Size _____ Location _____

18. Supports: Skirt _____ (Yes or No) Lugs _____ (Number) Legs _____ (Number) Other _____ (Describe) Attached _____ (Where & How)

1 - If Postweld Heat-Treated.
2 - List other internal or external pressure with coincident temperature when applicable.

WOT No. 01090165 41

FORM N-2 NPT CERTIFICATE HOLDERS' DATA REPORT FOR NUCLEAR PART AND APPURTENANCES*

As required by the Provision of the ASME Code Rules, Section III, Div. I

Philip Stiegs 7/1/05

1. Manufactured & Certified by : General Electric Company Nuclear Energy (GE-NE)
   3901 Castle Hayne Road, Wilmington, North Carolina 28401
   (Name and Address of NPT Certificate Holder)

   (b) Manufactured for : WNP 2 Richland, Washington 99352
   (Name and Address of N Certificate Holder for completed nuclear component)

2. Identification - Certificate Holder's S/N of Part : A9419 Nat'l Bd. No. N/A

   (a) Constructed According to Drawing No: 919D258G003 Rev 18 Dwg. Prepared by D. L. Peterson

   (b) Description of Part Inspected: Cylinder Tube & Flange

   (c) Applicable ASME Code: Section III , Edition 1974 , Addenda Date W'75 , Case No. 1361-2 Class 1

3. REMARKS: Standard part for use with Reactor. Hydrostatically tested at 1825 psi. min.
   (Brief description of service for which component was designed)

1. Cap 166B9274P001
   SA182 - F316
   3/8" thick x 1 1/16" OD

2. Indicator Tube 167B4908P001
   SA312 - TP316
   3/4" sch 40 - seamless pipe
   0.113" wall thickness
   1.065" max. dia.

3. Plug 159A1176P001
   SA182 - F304
   1/4" thick x 0.812" OD

4. Flange 919D610P001 (719E474)
   SA182 - F304
   3.37" thick x 9 5/8" OD

5. Head 129B3539P005
   SA182 - F304
   7/8" thick x 2.875" dia.

6. Ring Flange 114B5122P002
   SA182 - F304
   1" thick x 5.0" OD x 1.75" ID

7. Cap Screw 117C4516P002
   SA193 - B6
   6 ea. 1/2" dia. on 4 1/8" bolt circle

8. Plug 175A7961P001
   SA182 - F304
   0.38" thick x 1.307" dia.

9. Nut 114B5460P001
   XM - 19 SA479
   1.30" thick x 2.62" dia.

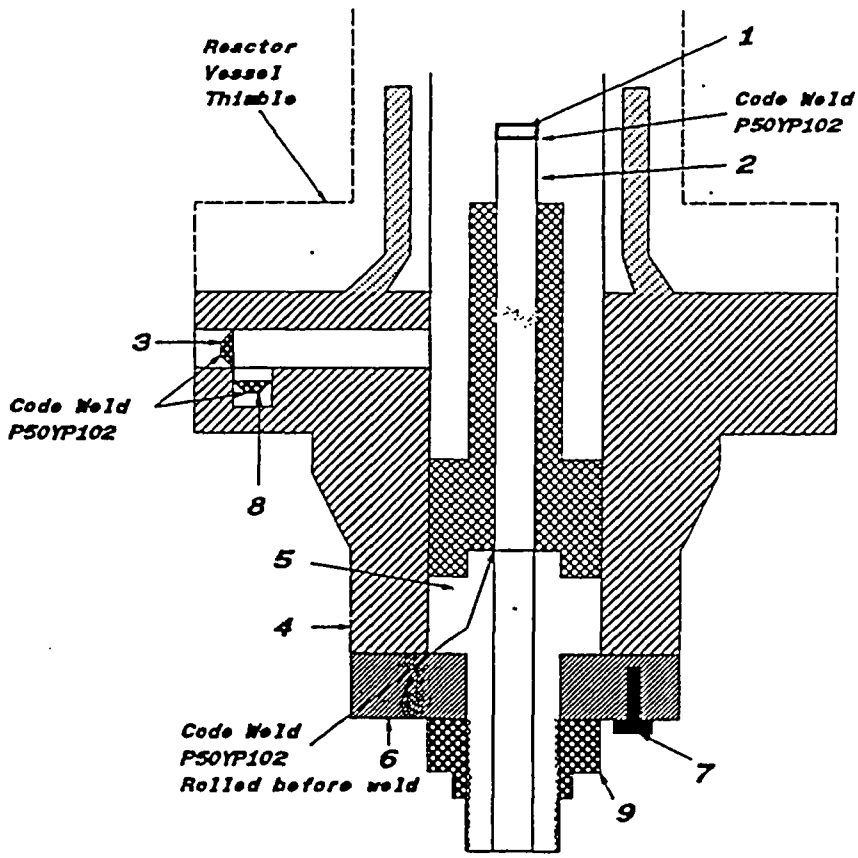

WOT No 01090165 42

ENERGY NORTHWEST
People·Vision·Solutions

FORM NIS-2 OWNER'S REPORT FOR REPAIRS OR REPLACEMENTS
As Required By The Provisions Of The ASME Code Section XI

Date: 06/30/05
Sheet: 1 Of 1
Unit: Not Applicable

1. **Owner:** Energy Northwest
   Address: Columbia Generating Station, North Power Plant Loop, Richland, Washington, 99352
2. **Plant:** Columbia Generating Station
   Address: Columbia Generating Station, North Power Plant Loop, Richland, Washington, 99352
3. (a) **Work Performed By:** Energy Northwest
   (b) **Repair Organization P.O. No, Job No, etc.:** Energy Northwest
   (c) **Type Code Symbol Stamp:** Not Applicable
   (d) **Certificate Of Authorization No.:** Not Applicable
   (e) **Expiration Date:** Not Applicable
4. **Identification Of System:** Control Rod Drive (CRD) System
5. (a) **Applicable Construction Code:** ASME Section III, Code Class 1, 1974 Edition with Winter 1975 Addenda, Code Case: 1361-2
   (b) **Applicable Edition Of ASME Section XI Utilized For Repairs Or Replacements:** 1989 Edition with no Addenda, Code Case: None
6. **Identification Of Components Repaired Or Replaced And Replacement Components**

Name Of Component	Name Of Manufacturer	Manufacturer's Serial No	National Board No	Other I.D.	Year Built	Repaired, Replaced Or Replacement	ASME Code Stamped (Yes Or No) Code Class
CRD	GE	6446	N/A	N/A	1974	Replaced	Yes, Code Class 1
CRD	GE	A8478	N/A	N/A	1989	Replacement	Yes, Code Class 1

7. **Description Of Work Performed:** Replaced Control Rod Drive (CRD) assembly at Core Location 46-19. The replacement work was performed in accordance with plant procedure PPM No 10.5.7 "Control Rod Drive Removal And Replacement" as follows:

1) Removed all eight (8) existing cap screws from the CRD assembly bolted flanged connection.
2) Removed existing CRD assembly, Serial No 6446.
3) Performed VT-1 visual examination on all eight (8) new replacement cap screws. VT-1 visual examination results acceptable.
4) Installed replacement CRD assembly, Serial No A8478.
5) Installed eight (8) VT-1 visually examined new replacement cap screws for the CRD assembly bolted flanged connection.
6) Torqued the cap screws for the CRD assembly bolted flanged connection to the required torque values.
7) Performed VT-2 visual examination during pressure test on CRD assembly bolted flanged connection to confirm pressure boundary integrity of the joint. No leakage was observed during pressure test.

NOTES -

1) The replacement CRD assembly, Serial No A8478 is certified to comply with ASME Section III, Code Class 1, 1974 Edition with Winter 1975 Addenda requirements.
2) New replacement cap screws, SA-540 Gr. B23, Class 4, Heat No 14813.
3) VT-1 visual examination Report No 2RPV-020 for the new replacement cap screws.

WOT No 01090165 42

ENERGY NORTHWEST
People·Vision·Solutions

FORM NIS-2 OWNER'S REPORT FOR REPAIRS OR REPLACEMENTS (Back)

8 Tests Conducted: Hydrostatic ☐ **Pneumatic** ☐ **Nominal Operating Pressure** ☐ **Other** ☐*

Test Pressure: 1020 Psig **Test Temperature:** 170° F
Component Design Pressure: 1250 Psig **Temperature:** 575° F

9. Remarks: 1) See attached N-2 Code Data Report for the replacement CRD assembly, Serial No A8478.
2) * Pressure test on the CRD bolted flanged connection - Test pressure of 1020 Psig and test temperature of 170° F recorded during ASME Section XI pressure test in accordance with PPM No OSP-RPV-R801 "Reactor Pressure Vessel Leakage Test".

CERTIFICATE OF COMPLIANCE

We certify that the statements made in this Owner's Report are correct and this replacement *conforms to the rules of the ASME Code, Section XI.*
Type Code Symbol Stamp: Not Applicable
Certificate Of Authorization No.: Not Applicable
Expiration Date: Not Applicable

Prepared By Kuldip Singh - Program Lead Engineer (PLE) **Signed By** Kuldip Singh - Program Lead Engineer (PLE)

Date 7/1/05 **Date** 7/1/05

CERTIFICATE OF INSERVICE INSPECTION

I, the undersigned, holding a valid commission issued by the National Board of Boiler and Pressure Vessel Inspectors and the State of Washington *and employed by* Hartford Steam Boiler Of Connecticut of Hartford, Connecticut *have inspected the components described in this Owner's Report during the period* 6-5-2005 *to* 7-8-2005 *and state to the best of my knowledge and belief, the Owner has performed examinations and taken corrective measures described in this Owner's Report in accordance with the requirements of the ASME Code, Section XI.*
By signing this certificate neither the Inspector nor his employer makes any warranty, expressed or implied, concerning the examinations and corrective measures described in this Owner's Report. Furthermore, neither the Inspector nor his employer shall be liable in any manner for any personal injury or property damage or a loss of any kind arising from or connected with this inspection.

Inspector's Signature **Commissions** 10655W A, B, N, I
National Board, State, and Endorsements

Date 7-8-2005

WOT No. 01090165 42
Philip Sugl
7/1/05

FORM N-2 NPT CERTIFICATE HOLDERS' DATA REPORT FOR NUCLEAR PART AND APPURTENANCES*
As required by the Provision of the ASME Code Rules, Section III, Div. 1

Manufactured & Certified by: GE Company, 2117 Castle Hayne Rd., Wilmington, N.C. 28402
(Name and Address of NPT Certificate Holder)

(b) Manufactured for: WNP-2, RICHLAND, Wa. 99352
(Name and Address of N Certificate Holder for completed nuclear component)

2. Identification-Certificate Holders's S/N of Part: A8478 Nat'l Bd. No. N/A

(a) Constructed According to Drawing No: 919D258G003 Dwg. Prepared by D. L. Peterson

(b) Description of Part Inspected: CYLINDER TUBE & FLANGE

(c) Applicable ASME Code: Section III, Edition 1974, Addenda Date W'75 Case No. 1361-2 Class 1

3. REMARKS: Sub-assembly of Control Rod Drive for use with reactor.
(Brief description or service for which component was designed)
Hydrostatically tested at 1825 psi. min.

*Sheet 1 of 2

We certify that the statements in this report are correct and this vessel part or appurtenance as defined in the code conforms to the rules of construction of the ASME Code Section III. (The applicable Designed Specification and Stress Report are not the responsibility of the NPT Certificate Holder for parts. An NPT Certification Holder for appurtenances is responsible for furnishing a separate Design Specification and Stress Report if the appurtenance is not included in the component Design Specification and Stress Report).

DATE: 2/1, 19 89 Signed GE-NEBG-NF&CM-QA By
(NPT Certificate Holder)

Certificate Of Authorization Expires: 6/16/90 Certification of Authorization No.: NPT N-1151

CERTIFICATION OF DESIGN FOR APPURTENANCE

Design information on file at GE COMPANY, SAN JOSE, CALIFORNIA

Stress analysis report on file at GE COMPANY, SAN JOSE, CALIFORNIA

DC22A6253 Rev. 0
Design specification certified by BJORN HAABERG Prof. Eng. State CALIF. Reg. No. 15570

DC22A6254 Rev. 0.
Stress analysis report certified by EDWARD YOSHIO Prof. Eng. State CALIF. Reg. No. M018646

CERTIFICATION OF SHOP INSPECTION

I, the undersigned, holding a valid commission by the National Board of Boiler and Pressure Inspectors and/or the State or Province of NORTH CAROLINA and employed by DEPARTMENT OF LABOR of STATE OF NORTH CAROLINA have inspected the part of a pressure vessel described in this Partial Data Report on 2/2 1989, and state that to the best of my knowledge and belief, the NPT Certificate Holder has constructed this part in accordance with the ASME Code Section III.

By signing this certificate, neither the Inspector nor his employer makes any warranty, expressed or implied, concerning the part described in the Partial Data Report. Furthermore, neither the Inspector nor his employer shall be liable in any manner for any personal injury or property damages or a loss of any kind arising from or connected with this inspection.

2/2, 1989 NC 779, PA WC2L60, OHS:
DATE Inspector's Signature National Board, State, Province and No.

*Supplemental sheets in form of lists, sketches or drawing may be used provided (1) size is 8-1/2" X 11", (2) information in 1-2 on this Data Report is included on each sheet, and (3) each sheet is numbered and number of sheets is recorded in Item 3. "REMARKSs"

(10/77)

VERIFIED & ACCEPTED
2-16-89
R.I. Inspector Date

FORM M-2 (back)

Items 4-8 Incl. to be completed for single wall vessels, jackets vessels, or shells of heat exchangers.

4. Shell: Material_____ T.S._____ Nominal Thickness___in. Corrosion Allowance____in Dia.____ft.___in. Length___ft.____in.
(Kind & Spec.No) (Min.ofRange Specified)

5. Seams: Long_____ H.T.[1]_____ R.T._____ Efficiency_____%

Girth_____ H.T.[1]_____ R.T._____ No. of Courses_____

6. Heads: (a) Material_____ T.S._____ (b)Material_____ T.S._____

Location (Top Bottom,Ends)	Thickness	Crown Radius	Knuckle Radius	Elliptical Ratio	Concial Apex Angle	Hemispherical Radius	Flat Diameter	Side to Press. (conv.or conc.)
(a)_____	_____	_____	_____	_____	_____	_____	_____	_____
(b)_____	_____	_____	_____	_____	_____	_____	_____	_____

If removable, bolts used_____ Other fastening_____
(Material,Spec.No., T.S. Size Number) (Describe or attach sketch)

7. Jacket Closure:_____
(Describe as ogee and weld,bar,etc. If bar give dimensions, if bolts, describe or sketch)

8. Design Pressure [2] 1250 psi at 575 °F Drop Weight_____ Charpy Impact_____ ft-lb at temp. of_____ °f

Items 9 and 10 to be completed for tube sections.

9. Tube Sheets: Stationary Mat'l._____ Dia._____ Thickness___in. Attachment_____
(Kind of Spec. No.) (Subj.to Press.) (Welded, Bolted)
Floating. Material _____ Dia._____ Thickness___in. Attachment_____

10. Tubes: Material_____ O.D._____in. Thickness_____ inches or gage. Number_____ Type_____
(Str. or U)

Items 11-14 incl. to be completed for inner chambers of jacketed vessels, or channels of heat exchangers

11. Shell: Material____ T.S.____ Nominal Thickness___in. Corrosion Allowance___in. Dia.___ft.___in___Length___ft.___in.
(Kind&Spec.No.) (Min.ofRange Specified)

12. Seams: Long_____ H.T.[1]_____ R.T._____ Efficiency_____%
Girth_____ H.T.[1]_____ R.T._____ No. of Courses_____

13. Heads (a) Material_____ T.S._____ (b)Material_____ T.S._____

Location	Ticnkess	Crown Radius	Knucle Radius	Elliptical Ratio	Concial Apex Angle	Hemispherical Radius	Fat Diameter	Side to Press (Conv.or Conc.)
(a)Top, Bottom, End	_____	_____	_____	_____	_____	_____	_____	_____
(b)Channel	_____	_____	_____	_____	_____	_____	_____	_____

If removable, bolts used (a)_____ (b)_____ (c)_____ Other Fastening_____
(Describe or attach sketch

14. Design pressure[2]_____ psi at_____ °F Drop Weight_____, Charpy Impact_____ft-lb at temp. of _____°F

Items below to be completed for all vessels where applicable.

15. Safety Valve Outlets: Number_____ Size_____ Location_____

16. Nozzles:

Purpose (Inlet Outlet, Drain)	Number	Dia or Size	Type	Material	Thickness	Reinforcement Material	Attached
_____	_____	_____	_____	_____	_____	_____	_____
_____	_____	_____	_____	_____	_____	_____	_____

17. Inspection Openings: Manholes, No._____ Size_____ Location_____
Handles, No._____ Size_____ Location_____
Threaded, No._____ Size_____ Location_____

18. Supports: Shirt_____ Lugs_____ Legs_____ Other_____ Attached_____
(Yes or No) (Number) (Number) (Describe) (Where & How)

[1] If Postweld Heat-Treated.

[2] List other internal or external pressure with conincident temperature when applicalbe.

W07 NO. 01090165 42

Philip Swift 7/1/05

FORM N-2 NPT CERTIFICATE HOLDERS' DATA REPORT FOR NUCLEAR PART AND APPURTENANCES*
As required by the Provision of the ASME Code Rules, Section III, Div. I

1 Manufactured & Certified by: GE Company, 2117 Castle Hayne Rd., Wilmington, N.C. 28402
(Name and Address of NPT Certificate Holder)

(b) Manufactured for: WNP-2, RICHLAND, Wa. 99352
(Name and Address of N Certificate Holder for completed nuclear component)

2. Identification-Certificate Holders's S/N of Part: A8478 Nat'l Bd. N. N/A

(a) Constructed According to Drawing No: 919D258G003 Dwg. Prepared by D. L. Peterson

(b) Description of Part Inspected: CYLINDER TUBE & FLANGE

(C) Applicable ASME Code: Section III, Edition 1974, Addenda Date W'75, Case No. 1361-2 Class 1

REMARKS: Sub-assembly of Control Rod Drive for use with reactor.
(Brief description of service for which component was designed)
Hydrostatically tested at 1825 psi. min.

*Sheet 2 of 2

1. Cap 167A2343P1
   SA182-F304
   3/8 thick X 1 1/16 OD

2. Indicator Tube 104B1336P3
   SA312-TP316
   3/4 sch 40-seamless pipe
   0.113 wall thickness
   1.065 max. dia.

3. Plug 159A1176P1
   SA182-F304
   1/4 thick x 0.812 OD

4. Flange 919D610P1 (719E474)
   SA182-F304
   3.37 thick x 9 5/8 OD

5. Head 129B3539P3, P5
   SA182-F304
   7/8 thick x 2.875 Dia.

6. Ring Flange 114B5122P2
   SA182-F304
   1" thick x 5.0 OD x 1.75 ID

7. Cap Screw 117C4516P2
   SA193-B6
   6 ea. 1/2 dia. on 4 1/8 bolt circle

8. Plug 175A7961P1
   SA182-F304
   0.38 thick x 1.307 dia.

9. Nut 114B5460P1
   SA193-B8A
   1.30 thick x 2.62 dia.

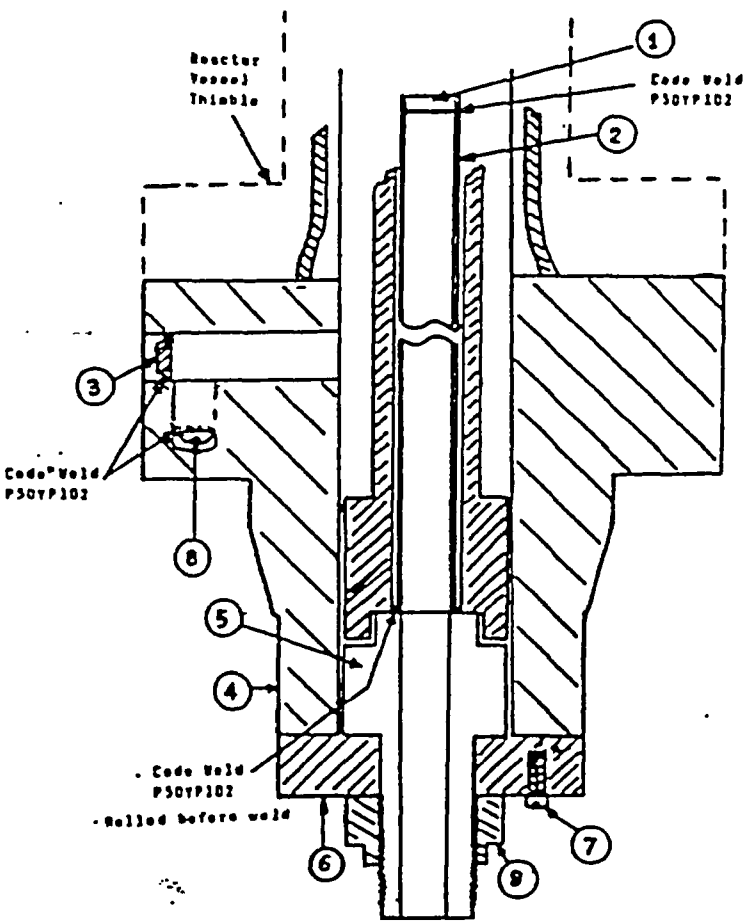

VERIFIED & ACCEPTED [signature] 2-16-89
R.I. Inspector Date

WOT No 01090165 43

ENERGY NORTHWEST
People·Vision·Solutions

FORM NIS-2 OWNER'S REPORT FOR REPAIRS OR REPLACEMENTS
As Required By The Provisions Of The ASME Code Section XI

Date: 06/30/05
Sheet: 1 Of 1
Unit: Not Applicable

1. **Owner:** Energy Northwest
   Address: Columbia Generating Station, North Power Plant Loop, Richland, Washington, 99352
2. **Plant:** Columbia Generating Station
   Address: Columbia Generating Station, North Power Plant Loop, Richland, Washington, 99352
3. (a) **Work Performed By:** Energy Northwest
   (b) **Repair Organization P.O. No, Job No, etc.:** Energy Northwest
   (c) **Type Code Symbol Stamp:** Not Applicable
   (d) **Certificate Of Authorization No.:** Not Applicable
   (e) **Expiration Date:** Not Applicable
4. **Identification Of System:** Control Rod Drive (CRD) System
5. (a) **Applicable Construction Code:** ASME Section III, Code Class 1, 1974 Edition with Winter 1975 Addenda, Code Case: 1361-2
   (b) **Applicable Edition Of ASME Section XI Utilized For Repairs Or Replacements:** 1989 Edition with no Addenda, Code Case: None
6. **Identification Of Components Repaired Or Replaced And Replacement Components**

Name Of Component	Name Of Manufacturer	Manufacturer's Serial No	National Board No	Other I.D.	Year Built	Repaired, Replaced Or Replacement	ASME Code Stamped (Yes Or No) Code Class
CRD	GE	A8929	N/A	N/A	1991	Replaced	Yes, Code Class 1
CRD	GE	A9414	N/A	N/A	1995	Replacement	Yes, Code Class 1

7. **Description Of Work Performed:** Replaced Control Rod Drive (CRD) assembly at Core Location 46-35. The replacement work was performed in accordance with plant procedure PPM No 10.5.7 "Control Rod Drive Removal And Replacement" as follows:

1) Removed all eight (8) existing cap screws from the CRD assembly bolted flanged connection.
2) Removed existing CRD assembly, Serial No A8929.
3) Performed VT-1 visual examination on all eight (8) new replacement cap screws. VT-1 visual examination results acceptable.
4) Installed replacement CRD assembly, Serial No A9414.
5) Installed eight (8) VT-1 visually examined new replacement cap screws for the CRD assembly bolted flanged connection.
6) Torqued the cap screws for the CRD assembly bolted flanged connection to the required torque values.
7) Performed VT-2 visual examination during pressure test on CRD assembly bolted flanged connection to confirm pressure boundary integrity of the joint. No leakage was observed during pressure test.

NOTES -

1) The replacement CRD assembly, Serial No A9414 is certified to comply with ASME Section III, Code Class 1, 1974 Edition with Winter 1975 Addenda requirements.
2) New replacement cap screws, SA-540 Gr. B23, Class 4, Heat No 14813.
3) VT-1 visual examination Report No 2RPV-020 for the new replacement cap screws.

WOT No 01090165 43

ENERGY NORTHWEST
People·Vision·Solutions

FORM NIS-2 OWNER'S REPORT FOR REPAIRS OR REPLACEMENTS (Back)

8 Tests Conducted: Hydrostatic ☐ *Pneumatic* ☐ *Nominal Operating Pressure* ☐ *Other* ☐ *

Test Pressure: 1020 Psig *Test Temperature:* 170° F

Component Design Pressure: 1250 Psig *Temperature:* 575° F

9. Remarks: 1) See attached N-2 Code Data Report for the replacement CRD assembly, Serial No A9414.
2) * Pressure test on the CRD bolted flanged connection - Test pressure of 1020 Psig and test temperature of 170° F recorded during ASME Section XI pressure test in accordance with PPM No OSP-RPV-R801 "Reactor Pressure Vessel Leakage Test".

CERTIFICATE OF COMPLIANCE

We certify that the statements made in this Owner's Report are correct and this replacement *conforms to the rules of the ASME Code, Section XI.*
Type Code Symbol Stamp: Not Applicable
Certificate Of Authorization No.: Not Applicable
Expiration Date: Not Applicable

Prepared By Kuldip Singh - Program Lead Engineer (PLE) *Signed By* Kuldip Singh - Program Lead Engineer (PLE)

Date 7/1/05 *Date* 7/1/05

CERTIFICATE OF INSERVICE INSPECTION

I, the undersigned, holding a valid commission issued by the National Board of Boiler and Pressure Vessel Inspectors and the State of Washington *and employed by* Hartford Steam Boiler Of Connecticut of Hartford, Connecticut *have inspected the components described in this Owner's Report during the period* 5-6-2005 *to* 7-8-2005 *and state to the best of my knowledge and belief, the Owner has performed examinations and taken corrective measures described in this Owner's Report in accordance with the requirements of the ASME Code, Section XI.*
By signing this certificate neither the Inspector nor his employer makes any warranty, expressed or implied, concerning the examinations and corrective measures described in this Owner's Report. Furthermore, neither the Inspector nor his employer shall be liable in any manner for any personal injury or property damage or a loss of any kind arising from or connected with this inspection.

Inspector's Signature *Commissions* 10655W A, B, N, I
National Board, State, and Endorsements

Date 7-8-2005

W07 No. 01090165 43

FORM N-2 NPT CERTIFICATE HOLDERS' DATA REPORT FOR NUCLEAR PART AND APPURTENANCES*

As required by the Provision of the ASME Code Rules, Section III, Div. I

7/1/05

1. Manufactured & Certified by : General Electric Company Nuclear Fuel & Components Manufacturing (GE NF & CM)

   2117 Castle Hayne Road, Wilmington, North Carolina 28401

   (Name and Address of NPT Certificate Holder)

   (b) Manufactured for : WNP 2 Richland, Washington 99352

   (Name and Address of N Certificate Holder for completed nuclear component)

2. Identification - Certificate Holder's S/N of Part : A9414 Nat'l Bd. No. N/A

   (a) Constructed According to Drawing No: 919D258G003 Rev 18 Dwg. Prepared by D. L. Peterson

   (b) Description of Part Inspected: Cylinder Tube & Flange

   (c) Applicable ASME Code: Section III , Edition 1974 , Addenda Date W75 , Case No. 1361-2 Class 1

3. REMARKS: Standard part for use with Reactor, Hydrostatically tested at 1825 psi. min.

   (Brief description of service for which component was designed)

Sheet 1 of 2

We certify that the statements in this report are correct and this vessel part or appurtenance as defined in the code conforms to the rules of construction of the ASME Code Section III. (The applicable Designed Specification and Stress Report are not the responsibility of the NPT Certificate Holder for parts. An NPT Certification Holder for appurtenances is responsible for furnishing a separate Design Specification and Stress Report if the appurtenance is not included in the component Design Specification and Stress Report).

Date: 06/27/95 Signed GE - NEBG - NF & CM - QA By

(NPT Certificate Holder) (ASC QA Representive)

Certificate of Authorization Expires: 6/16/96 Certification of Authorization No. : NPT N - 1151

Certification of Design for Appurtenance

Design information on file at GE Company, San Jose, California

Stress analysis report on file at GE Company, San Jose, California

DC22A6253 Rev. 1
Design specification certified by Bjorn Haaberg Prof. Eng. State Calif. Reg. No. 15570

DC22A6254 Rev 1
Stress analysis report certified by Edward Yoshio Prof. Eng. State Calif. Reg. No. M018646

Certification of Shop Inspection

I, the undersigned, holding a valid commission by the National Board of Boiler and Pressure Inspectors and/or the State or Province of North Carolina and employed by Department of Labor of State of North Carolina have inspected the part of a pressure vessel described in this Partial Data Report on 5/16, 1995, and state that to the best of my knowledge and belief, the NPT Certificate Holder has constructed this part in accordance with the ASME Code Section III.

By signing this certificate, neither the Inspector nor his employer makes any warranty, expressed or implied, concerning the part described in the Partial Data Report. Furthermore, neither the Inspector nor his employer shall be liable in any manner for any personal injury or property damages or a loss of any kind arising from or connected with this inspection.

6/27, 1995 Jerome P Ewer NC 1231, Ohio, WC 3686 PA

Date Inspector's Signature National Board, State, Province And No.

*Supplemental sheets in form of lists, sketches or drawing may be used provided (1) size is 8-1/2" x 11", (2) information in 1-2 on this Data Report is included on each sheet, and (3) each sheet is numbered and number of sheets is recorded in Item 3. "REMARKS".

(07/90)

FORM N-2 (back)

Items 4-8 Incl. to be completed for single wall vessels, jackets vessels, or shells of heat exchangers.

4. Shell: Material _____ T.S. _____ Nominal Thickness ___ in. Corrosion Allowance ___ in. Dia. ___ ft. ___ in. Length ___ ft. ___ in.
(Kind & Spec. No.) (Min. of Range Specified)

5. Seams: Long _____ H.T.[1] _____ R.T. _____ Efficiency _____%
Girth _____ H.T.[1] _____ R.T. _____ No. of Courses _____

6. Heads: (a) Material _____ T.S. _____ (b) Material _____ T.S. _____

	Location (Top Bottom, Ends)	Thickness	Crown Radius	Knuckle Radius	Elliptical Ratio	Concial Apex Angle	Hemispherical Radius	Flat Diameter	Side to Press. (conv. or conc.)
(a)									
(b)									

If removable, bolts used _____ (Material, Spec. No., T.S. Size Number) Other fastening _____ (Describe or attach sketch)

7. Jacket Closure: _____
(Describe as ogee and weld, bar, etc. If bar give dimensions, if bolts, describe or sketch)

Drop Weight _____
Charpy Impact _____ ft-lb

8. Design pressure[2] 1250 psi at 575 °F at temp of _____ °F

Items 9 and 10 to be completed for tube sections

9. Tube Sheets: Stationary. Material _____ (Kind & Spec. No.) Dia. _____ (Subject to pressure) Thickness ___ in. Attachment _____ (Welded, Bolted)
Floating. Material _____ Dia. _____ Thickness ___ in. Attachment _____

10. Tubes: Material _____ O.D. _____ in. Thickness _____ Inches or gage. Number _____ Type _____ (Str. or U)

Items 11 - 14 incl. to be completed for inner chambers of jacketed vessels, or channels of heat exchangers.

11. Shell: Material _____ T.S. _____ Nominal Thickness ___ in. Corrosion Allowance ___ in. Dia. ___ ft. ___ in. Length ___ ft. ___ in.
(Kind & Spec. No.) (Min. of Range Specified)

12. Seams: Long _____ H.T.[1] _____ R.T. _____ Efficiency _____%
Girth _____ H.T.[1] _____ R.T. _____ No. of Courses _____

13. Heads: (a) Material _____ T.S. _____ (b) Material _____ T.S. _____

	Location	Thickness	Crown Radius	Knuckle Radius	Elliptical Ratio	Concial Apex Angle	Hemispherical Radius	Flat Diameter	Side to Press. (conv. or conc.)
(a)	Top, bottom, ends								
(b)	Channel								

If removable, bolts used (a)_____ (b)_____ (c)_____ Other fastening _____ (Describe or attach sketch)

Drop Weight _____
Charpy Impact _____ ft-lb

14. Design pressure[2] _____ psi at _____ °F at temp of _____ °F

Items below to be completed for all vessels where applicable.

15. Safety Valve Outlets: Number _____ Size _____ Location _____

16. Nozzles:

Purpose (Inlet, Outlet, Drain)	Number	Dia. or Size	Type	Material	Thickness	Reinforcement Material	How Attached

17. Inspection Openings: Manholes, No. _____ Size _____ Location _____
Handholes, No. _____ Size _____ Location _____
Threaded, No. _____ Size _____ Location _____

18. Supports: Skirt _____ (Yes or No) Lugs _____ (Number) Legs _____ (Number) Other _____ (Describe) Attached _____ (Where & How)

1 - If Postweld Heat-Treated.
2 - List other internal or external pressure with coincident temperature when applicable.

WOT No. 01090165 43

FORM N-2 NPT CERTIFICATE HOLDERS' DATA REPORT FOR NUCLEAR PART AND APPURTENANCES*

As required by the Provision of the ASME Code Rules, Section III, Div. I

1. Manufactured & Certified by : General Electric Company Nuclear Fuel & Components Manufacturing (GE NF&CM)

   2117 Castle Hayne Road, Wilmington, North Carolina 28401

   (Name and Address of NPT Certificate Holder)

   (b) Manufactured for : WNP 2 Richland, Washington 99352

   (Name and Address of N Certificate Holder for completed nuclear component)

2. Identification - Certificate Holder's S/N of Part : A9414 Nat'l Bd. No. N/A

   (a) Constructed According to Drawing No: 919D258G003 Rev 18 Dwg. Prepared by D. L. Peterson

   (b) Description of Part Inspected: Cylinder Tube & Flange

   (c) Applicable ASME Code: Section III , Edition 1974 , Addenda Date W'75 , Case No. 1361-2 Class 1

3. REMARKS: Standard part for use with Reactor. Hydrostatically tested at 1825 psi. min.

   (Brief description of service for which component was designed)

1. Cap 166B9274P001
   SA182 - F316
   3/8" thick x 1 1/16" OD

2. Indicator Tube 167B4908P001
   SA312 - TP316
   3/4" sch 40 - seamless pipe
   0.113" wall thickness
   1.065" max. dia.

3. Plug 159A1176P001
   SA182 - F304
   1/4" thick x 0.812" OD

4. Flange 919D610P001 (719E474)
   SA182 - F304
   3.37" thick x 9 5/8" OD

5. Head 129B3539P005
   SA182 - F304
   7/8" thick x 2.875" dia.

6. Ring Flange 114B5122P002
   SA182 - F304
   1" thick x 5.0" OD x 1.75" ID

7. Cap Screw 117C4516P002
   SA193 - B6
   6 ea. 1/2" dia. on 4 1/8" bolt circle

8. Plug 175A7961P001
   SA182 - F304
   0.38" thick x 1.307" dia.

9. Nut 114B5460P001
   XM - 19 SA479
   1.30" thick x 2.62" dia.

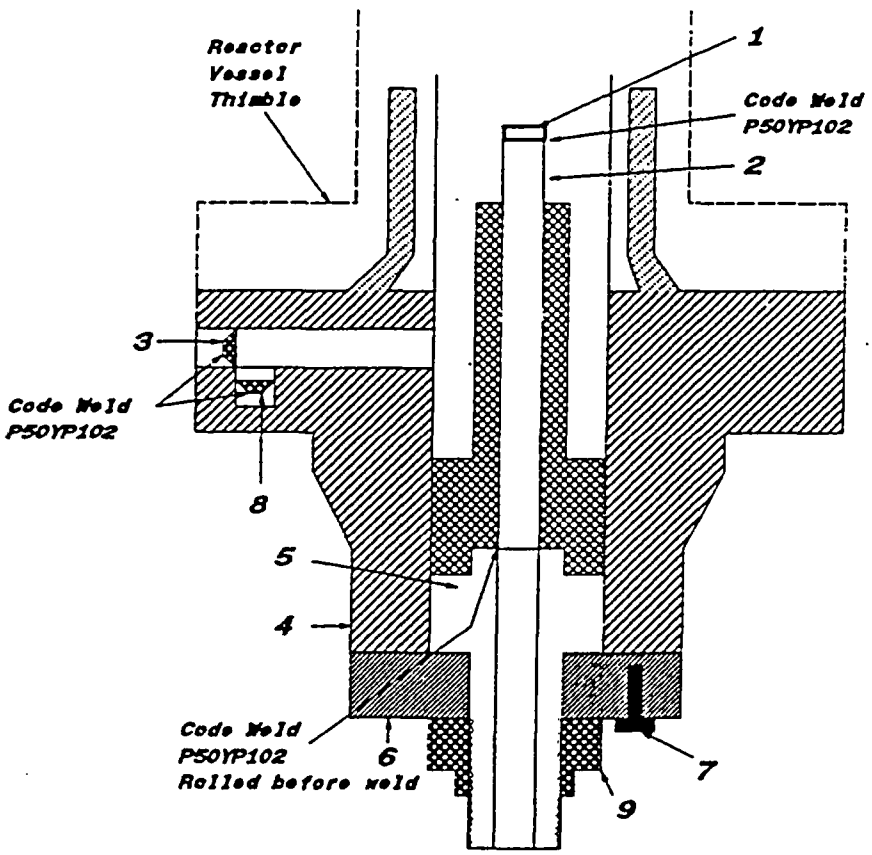

WOT No 01090165 44

ENERGY NORTHWEST
People·Vision·Solutions

FORM NIS-2 OWNER'S REPORT FOR REPAIRS OR REPLACEMENTS
As Required By The Provisions Of The ASME Code Section XI

Date: 06/30/05
Sheet: 1 Of 1
Unit: Not Applicable

1. **Owner:** Energy Northwest
   Address: Columbia Generating Station, North Power Plant Loop, Richland, Washington, 99352
2. **Plant:** Columbia Generating Station
   Address: Columbia Generating Station, North Power Plant Loop, Richland, Washington, 99352
3. **(a) Work Performed By:** Energy Northwest
   (b) Repair Organization P.O. No, Job No, etc.: Energy Northwest
   (c) Type Code Symbol Stamp: Not Applicable
   (d) Certificate Of Authorization No.: Not Applicable
   (e) Expiration Date: Not Applicable
4. **Identification Of System:** Control Rod Drive (CRD) System
5. **(a) Applicable Construction Code:** ASME Section III, Code Class 1, 1974 Edition with Winter 1975 Addenda, Code Case: 1361-2
   (b) Applicable Edition Of ASME Section XI Utilized For Repairs Or Replacements: 1989 Edition with no Addenda, Code Case: None
6. **Identification Of Components Repaired Or Replaced And Replacement Components**

Name Of Component	Name Of Manufacturer	Manufacturer's Serial No	National Board No	Other I.D.	Year Built	Repaired, Replaced Or Replacement	ASME Code Stamped (Yes Or No) Code Class
CRD	GE	A6704	N/A	N/A	1987	Replaced	Yes, Code Class 1
CRD	GE	A9646	N/A	N/A	1995	Replacement	Yes, Code Class 1

7. **Description Of Work Performed:** Replaced Control Rod Drive (CRD) assembly at Core Location 46-51. The replacement work was performed in accordance with plant procedure PPM No 10.5.7 "Control Rod Drive Removal And Replacement" as follows:

1) Removed all eight (8) existing cap screws from the CRD assembly bolted flanged connection.
2) Removed existing CRD assembly, Serial No A6704.
3) Performed VT-1 visual examination on all eight (8) new replacement cap screws. VT-1 visual examination results acceptable.
4) Installed replacement CRD assembly, Serial No A9646.
5) Installed eight (8) VT-1 visually examined new replacement cap screws for the CRD assembly bolted flanged connection.
6) Torqued the cap screws for the CRD assembly bolted flanged connection to the required torque values.
7) Performed VT-2 visual examination during pressure test on CRD assembly bolted flanged connection to confirm pressure boundary integrity of the joint. No leakage was observed during pressure test.

NOTES -

1) The replacement CRD assembly, Serial No A9646 is certified to comply with ASME Section III, Code Class 1, 1974 Edition with Winter 1975 Addenda requirements.
2) New replacement cap screws, SA-540 Gr. B23, Class 4, Heat No 14813.
3) VT-1 visual examination Report No 2RPV-020 for the new replacement cap screws.

WOT No 01090165 44

ENERGY NORTHWEST
People·Vision·Solutions

FORM NIS-2 OWNER'S REPORT FOR REPAIRS OR REPLACEMENTS (Back)

8 Tests Conducted: Hydrostatic [ ] *Pneumatic* [ ] *Nominal Operating Pressure* [ ] *Other* [•]

Test Pressure: 1020 Psig *Test Temperature:* 170° F

Component Design Pressure: 1250 Psig *Temperature:* 575° F

9. Remarks: 1) See attached N-2 Code Data Report for the replacement CRD assembly, Serial No A9646.
2) * Pressure test on the CRD bolted flanged connection - Test pressure of 1020 Psig and test temperature of 170° F recorded during ASME Section XI pressure test in accordance with PPM No OSP-RPV-R801 "Reactor Pressure Vessel Leakage Test".

CERTIFICATE OF COMPLIANCE

We certify that the statements made in this Owner's Report are correct and this replacement *conforms to the rules of the ASME Code, Section XI.*
Type Code Symbol Stamp: Not Applicable
Certificate Of Authorization No.: Not Applicable
Expiration Date: Not Applicable

Prepared By Kuldip Singh - Program Lead Engineer (PLE) *Signed By* Kuldip Singh - Program Lead Engineer (PLE)

Date 7/1/05 *Date* 7/1/05

CERTIFICATE OF INSERVICE INSPECTION

I, the undersigned, holding a valid commission issued by the National Board of Boiler and Pressure Vessel Inspectors and the State of Washington *and employed by* Hartford Steam Boiler Of Connecticut of Hartford, Connecticut *have inspected the components described in this Owner's Report during the period* 5-6-2005 *to* 7-8-2005 *and state to the best of my knowledge and belief, the Owner has performed examinations and taken corrective measures described in this Owner's Report in accordance with the requirements of the ASME Code, Section XI.*
By signing this certificate neither the Inspector nor his employer makes any warranty, expressed or implied, concerning the examinations and corrective measures described in this Owner's Report. Furthermore, neither the Inspector nor his employer shall be liable in any manner for any personal injury or property damage or a loss of any kind arising from or connected with this inspection.

Inspector's Signature *Commissions* 1065540 A, B, N, I
National Board, State, and Endorsements

Date 7-8-2005

W07 No. 01090165 44

FORM N-2 NPT CERTIFICATE HOLDERS' DATA REPORT FOR NUCLEAR PART AND APPURTENANCES*

As required by the Provision of the ASME Code Rules, Section III, Div. I

7/1/05

1. Manufactured & Certified by : General Electric Company Nuclear Fuel & Components Manufacturing (GE NF & CM)

   2117 Castle Hayne Road, Wilmington, North Carolina 28401

   (Name and Address of NPT Certificate Holder)

   (b) Manufactured for : WNP 2 Richland, Washington 99352

   (Name and Address of N Certificate Holder for completed nuclear component)

2. Identification - Certificate Holder's S/N of Part : A9646 Nat'l Bd. No. N/A

   (a) Constructed According to Drawing No: 919D258G003 Rev 19 Dwg. Prepared by D. L. Peterson

   (b) Description of Part Inspected: Cylinder Tube & Flange

   (c) Applicable ASME Code: Section III , Edition 1974 , Addenda Date W'75 , Case No. 1361-2 Class 1

3. REMARKS: Standard part for use with Reactor. Hydrostatically tested at 1825 psi. min.

   (Brief description of service for which component was designed)

Sheet 1 of 2

We certify that the statements in this report are correct and this vessel part or appurtenance as defined in the code conforms to the rules of construction of the ASME Code Section III. (The applicable Designed Specification and Stress Report are not the responsibility of the NPT Certificate Holder for parts. An NPT Certification Holder for appurtenances is responsible for furnishing a separate Design Specification and Stress Report if the appurtenance is not included in the component Design Specification and Stress Report).

Date: 06/27/95 Signed GE - NEBG - NF & CM - QA By

(NPT Certificate Holder) (SC QA Representive)

Certificate of Authorization Expires: 6/16/96 Certification of Authorization No. : NPT N - 1151

Certification of Design for Appurtenance

Design information on file at GE Company, San Jose, California

Stress analysis report on file at GE Company, San Jose, California

DC22A6253 Rev. 1
Design specification certified by Bjorn Haaberg Prof. Eng. State Calif. Reg. No. 15570

DC22A6254 Rev 1
Stress analysis report certified by Edward Yoshio Prof. Eng. State Calif. Reg. No. M018646

Certification of Shop Inspection

I, the undersigned, holding a valid commission by the National Board of Boiler and Pressure Inspectors and/or the State or Province of North Carolina and employed by Department of Labor of State of North Carolina have inspected the part of a pressure vessel described in this Partial Data Report on 5/16, 1995, and state that to the best of my knowledge and belief, the NPT Certificate Holder has constructed this part in accordance with the ASME Code Section III.

By signing this certificate, neither the Inspector nor his employer makes any warranty, expressed or implied, concerning the part described in the Partial Data Report. Furthermore, neither the Inspector nor his employer shall be liable in any manner for any personal injury or property damages or a loss of any kind arising from or connected with this inspection.

6/27, 1995 Jerome P Emm NC 1231, Ohio, WC 3686 PA

Date Inspector's Signature National Board, State, Province And No.

*Supplemental sheets in form of lists, sketches or drawing may be used provided (1) size is 8-1/2" x 11", (2) information in 1-2 on this Data Report is included on each sheet, and (3) each sheet is numbered and number of sheets is recorded in Item 3. "REMARKS".

(07/90)

FORM N-2 (back)

Items 4-8 Incl. to be completed for single wall vessels, jackets vessels, or shells of heat exchangers.

4. Shell: Material _____ (Kind & Spec. No.) T.S. _____ (Min. of Range Specified) Nominal Thickness ___ in. Corrosion Allowance ___ in. Dia. ___ ft. ___ in. Length ___ ft. ___ in.

5. Seams: Long _____ H.T.[1] _____ R.T. _____ Efficiency _____%

Girth _____ H.T.[1] _____ R.T. _____ No. of Courses _____

6. Heads: (a) Material _____ T.S. _____ (b) Material _____ T.S. _____

	Location (Top Bottom, Ends)	Thickness	Crown Radius	Knuckle Radius	Elliptical Ratio	Concial Apex Angle	Hemispherical Radius	Flat Diameter	Side to Press. (conv. or conc.)
(a)									
(b)									

If removable, bolts used _____ (Material, Spec. No., T.S. Size Number) Other fastening _____ (Describe or attach sketch)

7. Jacket Closure: _____ (Describe as ogee and weld, bar, etc. If bar give dimensions, if bolts, describe or sketch)

Drop Weight _____
Charpy Impact _____ ft-lb

8. Design pressure[2] _____1250_____ psi at _____575_____ °F at temp of _____ °F

Items 9 and 10 to be completed for tube sections

9. Tube Sheets: Stationary. Material _____ (Kind & Spec. No.) Dia. _____ (Subject to pressure) Thickness ___ in. Attachment _____ (Welded, Bolted)

Floating. Material _____ Dia. _____ Thickness ___ in. Attachment _____

10. Tubes: Material _____ O.D. _____ in. Thickness _____ inches or gage. Number _____ Type _____ (Str. or U)

Items 11 - 14 incl. to be completed for inner chambers of jacketed vessels, or channels of heat exchangers.

11. Shell: Material _____ (Kind & Spec. No.) T.S. _____ (Min. of Range Specified) Nominal Thickness ___ in. Corrosion Allowance ___ in. Dia. ___ ft. ___ in. Length ___ ft. ___ in.

12. Seams: Long _____ H.T.[1] _____ R.T. _____ Efficiency _____%

Girth _____ H.T.[1] _____ R.T. _____ No. of Courses _____

13. Heads: (a) Material _____ T.S. _____ (b) Material _____ T.S. _____

	Location	Thickness	Crown Radius	Knuckle Radius	Elliptical Ratio	Concial Apex Angle	Hemispherical Radius	Flat Diameter	Side to Press. (conv. or conc.)
(a)	Top, bottom, ends								
(b)	Channel								

If removable, bolts used (a)_____(b)_____(c)_____ Other fastening _____ (Describe or attach sketch)

Drop Weight _____
Charpy Impact _____ ft-lb

14. Design pressure[2] _____ psi at _____ °F at temp of _____ °F

Items below to be completed for all vessels where applicable.

15. Safety Valve Outlets: Number _____ Size _____ Location _____

16. Nozzles:

Purpose (Inlet, Outlet, Drain)	Number	Dia. or Size	Type	Material	Thickness	Reinforcement Material	How Attached

7. Inspection Openings: Manholes, No. _____ Size _____ Location _____
Handholes, No. _____ Size _____ Location _____
Threaded, No. _____ Size _____ Location _____

8. Supports: Skirt _____ (Yes or No) Lugs _____ (Number) Legs _____ (Number) Other _____ (Describe) Attached _____ (Where & How)

1 - If Postweld Heat-Treated.
2 - List other internal or external pressure with coincident temperature when applicable.

FORM N-2 NPT CERTIFICATE HOLDERS' DATA REPORT FOR NUCLEAR PARTS AND APPURTENANCES*
As required by the Provision of the ASME Code Rules, Section III, Div. I

WOT NO. 01090165 44

Manufactured & Certified by : General Electric Company Nuclear Fuel & Components Manufacturing (GE NF & CM)
2117 Castle Hayne Road, Wilmington, North Carolina 28401
(Name and Address of NPT Certificate Holder)

Philip Supl 7/1/05

(b) Manufactured for : WNP 2 Richland, Washington 99352
(Name and Address of N Certificate Holder for completed nuclear component)

2. Identification - Certificate Holder's S/N of Part : A9646 Nat'l Bd. No. N/A

(a) Constructed According to Drawing No: 919D258G003 Rev 19 Dwg. Prepared by D. L. Peterson

(b) Description of Part Inspected: Cylinder Tube & Flange

(c) Applicable ASME Code: Section III , Edition 1974 , Addenda Date W'75 , Case No. 1361-2 Class 1

3. REMARKS: Standard part for use with Reactor. Hydrostatically tested at 1825 psi. min.
(Brief description of service for which component was designed)

Sheet 2 of 2

1. Cap 166B9274P001
SA182 - F316
3/8" thick x 1 1/16" OD

2. Indicator Tube 167B4908P001
SA312 - TP316
3/4" sch 40 - seamless pipe
0.113" wall thickness
1.065" max. dia.

3. Plug 159A1176P001
SA182 - F304
1/4" thick x 0.812" OD

4. Flange 919D610P001 (719E474)
SA182 - F304
3.37" thick x 9 5/8" OD

5. Head 129B3539P005
SA182 - F304
7/8" thick x 2.875" dia.

6. Ring Flange 114B5122P002
SA182 - F304
1" thick x 5.0" OD x 1.75" ID

7. Cap Screw 117C4516P002
SA193 - B6
6 ea. 1/2" dia. on 4 1/8" bolt circle

8. Plug 175A7961P001
SA182 - F304
0.38" thick x 1.307" dia.

9. Nut 114B5460P001
XM - 19 SA479
1.30" thick x 2.62" dia.

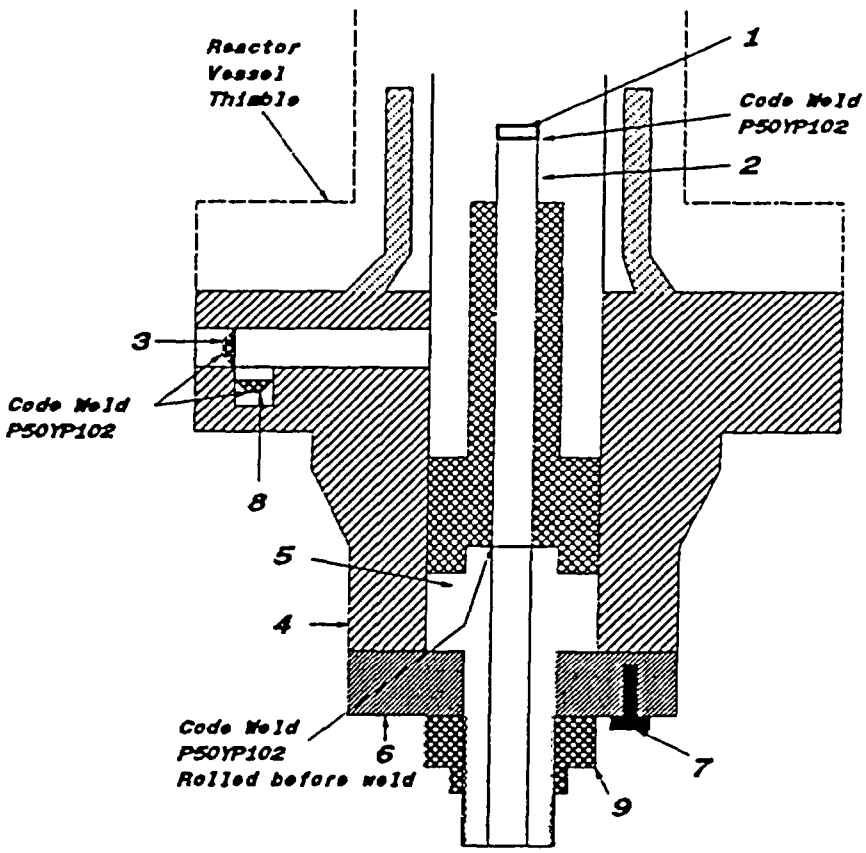

WOT No 01090165 45

ENERGY NORTHWEST
People·Vision·Solutions

FORM NIS-2 OWNER'S REPORT FOR REPAIRS OR REPLACEMENTS
As Required By The Provisions Of The ASME Code Section XI

1. Owner: Energy Northwest
Address: Columbia Generating Station, North Power Plant Loop, Richland, Washington, 99352
2. Plant: Columbia Generating Station
Address: Columbia Generating Station, North Power Plant Loop, Richland, Washington, 99352

Date: 06/30/05
Sheet: 1 Of 1
Unit: Not Applicable

3. (a) Work Performed By: Energy Northwest
(b) Repair Organization P.O. No, Job No, etc.: Energy Northwest
(c) Type Code Symbol Stamp: Not Applicable
(d) Certificate Of Authorization No.: Not Applicable
(e) Expiration Date: Not Applicable
4. Identification Of System: Control Rod Drive (CRD) System
5. (a) Applicable Construction Code: ASME Section III, Code Class 1, 1974 Edition with Winter 1975 Addenda, Code Case: 1361-2
(b) Applicable Edition Of ASME Section XI Utilized For Repairs Or Replacements: 1989 Edition with no Addenda, Code Case: None
6. Identification Of Components Repaired Or Replaced And Replacement Components

Name Of Component	Name Of Manufacturer	Manufacturer's Serial No	National Board No	Other I.D.	Year Built	Repaired, Replaced Or Replacement	ASME Code Stamped (Yes Or No) Code Class
CRD	GE	6542	N/A	N/A	1974	Replaced	Yes, Code Class 1
CRD	GE	A9402	N/A	N/A	1995	Replacement	Yes, Code Class 1

7. Description Of Work Performed: Replaced Control Rod Drive (CRD) assembly at Core Location 46-55. The replacement work was performed in accordance with plant procedure PPM No 10.5.7 "Control Rod Drive Removal And Replacement" as follows:

1) Removed all eight (8) existing cap screws from the CRD assembly bolted flanged connection.
2) Removed existing CRD assembly, Serial No 6542.
3) Performed VT-1 visual examination on all eight (8) new replacement cap screws. VT-1 visual examination results acceptable.
4) Installed replacement CRD assembly, Serial No A9402.
5) Installed eight (8) VT-1 visually examined new replacement cap screws for the CRD assembly bolted flanged connection.
6) Torqued the cap screws for the CRD assembly bolted flanged connection to the required torque values.
7) Performed VT-2 visual examination during pressure test on CRD assembly bolted flanged connection to confirm pressure boundary integrity of the joint. No leakage was observed during pressure test.

NOTES -

1) The replacement CRD assembly, Serial No A9402 is certified to comply with ASME Section III, Code Class 1, 1974 Edition with Winter 1975 Addenda requirements.
2) New replacement cap screws, SA-540 Gr. B23, Class 4, Heat No 14813.
3) VT-1 visual examination Report No 2RPV-020 for the new replacement cap screws.

WOT No 01090165 45

ENERGY NORTHWEST
People·Vision·Solutions

FORM NIS-2 OWNER'S REPORT FOR REPAIRS OR REPLACEMENTS (Back)

8 Tests Conducted: Hydrostatic ☐ Pneumatic ☐ Nominal Operating Pressure ☐ Other ☐

Test Pressure: 1020 Psig **Test Temperature:** 170° F
Component Design Pressure: 1250 Psig **Temperature:** 575° F

9. Remarks: 1) See attached N-2 Code Data Report for the replacement CRD assembly, Serial No A9402.
2) * Pressure test on the CRD bolted flanged connection - Test pressure of 1020 Psig and test temperature of 170° F recorded during ASME Section XI pressure test in accordance with PPM No OSP-RPV-R801 "Reactor Pressure Vessel Leakage Test".

CERTIFICATE OF COMPLIANCE

We certify that the statements made in this Owner's Report are correct and this replacement *conforms to the rules of the ASME Code, Section XI.*
Type Code Symbol Stamp: Not Applicable
Certificate Of Authorization No.: Not Applicable
Expiration Date: Not Applicable

Prepared By Kuldip Singh - Program Lead Engineer (PLE) **Signed By** Kuldip Singh - Program Lead Engineer (PLE)

Date 7/1/05 **Date** 7/1/05

CERTIFICATE OF INSERVICE INSPECTION

I, the undersigned, holding a valid commission issued by the National Board of Boiler and Pressure Vessel Inspectors and the State of Washington *and employed by* Hartford Steam Boiler Of Connecticut of Hartford, Connecticut *have inspected the components described in this Owner's Report during the period* 5-6-2005 *to* 7-~~12~~-11-2005 *and state to the best of my knowledge and belief, the Owner has performed examinations and taken corrective measures described in this Owner's Report in accordance with the requirements of the ASME Code, Section XI.*
7-11-05
By signing this certificate neither the Inspector nor his employer makes any warranty, expressed or implied, concerning the examinations and corrective measures described in this Owner's Report. Furthermore, neither the Inspector nor his employer shall be liable in any manner for any personal injury or property damage or a loss of any kind arising from or connected with this inspection.

Inspector's Signature **Commissions** 10655W A, B, N, I
National Board, State, and Endorsements

Date 7-11-2005

WO T No. 01090165 45

FORM N-2 NPT CERTIFICATE HOLDERS' DATA REPORT FOR NUCLEAR PART AND APPURTENANCES*

As required by the Provision of the ASME Code Rules, Section III, Div. I

7/1/05

1. Manufactured & Certified by : General Electric Company Nuclear Fuel & Components Manufacturing (GE NF&CM)

   2117 Castle Hayne Road, Wilmington, North Carolina 28401

   (Name and Address of NPT Certificate Holder)

   (b) Manufactured for : WNP 2 Richland, Washington 99352

   (Name and Address of N Certificate Holder for completed nuclear component)

2. Identification - Certificate Holder's S/N of Part : A9402 Nat'l Bd. No. N/A

   (a) Constructed According to Drawing No: 919D258G003 Rev 18 Dwg. Prepared by D. L. Peterson

   (b) Description of Part Inspected: Cylinder Tube & Flange

   (c) Applicable ASME Code: Section III , Edition 1974 , Addenda Date W'75 , Case No. 1361-2 Class 1

3. REMARKS: Standard part for use with Reactor. Hydrostatically tested at 1825 psi. min.

   (Brief description of service for which component was designed)

Sheet 1 of 2

We certify that the statements in this report are correct and this vessel part or appurtenance as defined in the code conforms to the rules of construction of the ASME Code Section III. (The applicable Designed Specification and Stress Report are not the responsibility of the NPT Certificate Holder for parts. An NPT Certification Holder for appurtenances is responsible for furnishing a separate Design Specification and Stress Report if the appurtenance is not included in the component Design Specification and Stress Report).

Date: 06/27/95 Signed GE - NEBG - NF & CM - QA By

(NPT Certificate Holder) (ISC QA Representive)

Certificate of Authorization Expires: 6/16/96 Certification of Authorization No. : NPT N - 1151

Certification of Design for Appurtenance

Design information on file at GE Company, San Jose, California

Stress analysis report on file at GE Company, San Jose, California

DC22A6253 Rev. 1
Design specification certified by Bjorn Haaberg Prof. Eng. State Calif. Reg. No. 15570

DC22A6254 Rev 1
Stress analysis report certified by Edward Yoshio Prof. Eng. State Calif. Reg. No. M018646

Certification of Shop Inspection

I, the undersigned, holding a valid commission by the National Board of Boiler and Pressure Inspectors and/or the State or Province of North Carolina and employed by Department of Labor of State of North Carolina have inspected the part of a pressure vessel described in this Partial Data Report on 6/16, 1995, and state that to the best of my knowledge and belief, the NPT Certificate Holder has constructed this part in accordance with the ASME Code Section III.

By signing this certificate, neither the Inspector nor his employer makes any warranty, expressed or implied, concerning the part described in the Partial Data Report. Furthermore, neither the Inspector nor his employer shall be liable in any manner for any personal injury or property damages or a loss of any kind arising from or connected with this inspection.

6/27, 1995 Jerome P Ewen NC 1231, Ohio, WC 3686 PA

Date Inspector's Signature National Board, State, Province And No.

*Supplemental sheets in form of lists, sketches or drawing may be used provided (1) size is 8-1/2" x 11", (2) information in 1-2 on this Data Report is included on each sheet, and (3) each sheet is numbered and number of sheets is recorded in Item 3. "REMARKS".

(07/90)

FORM N-2 (back)

Items 4-8 Incl. to be completed for single wall vessels, jackets vessels, or shells of heat exchangers.

4. Shell: Material _____ T.S. _____ Nominal Thickness ___ in. Corrosion Allowance ___ in. Dia. ___ ft. ___ in. Length ___ ft. ___ in.
(Kind & Spec. No.) (Min. of Range Specified)

5. Seams: Long _____ H.T.[1] _____ R.T. _____ Efficiency _____%
Girth _____ H.T.[1] _____ R.T. _____ No. of Courses _____

6. Heads: (a) Material _____ T.S. _____ (b) Material _____ T.S. _____

	Location (Top Bottom, Ends)	Thickness	Crown Radius	Knuckle Radius	Elliptical Ratio	Concial Apex Angle	Hemispherical Radius	Flat Diameter	Side to Press. (conv. or conc.)
(a)									
(b)									

If removable, bolts used _____ (Material, Spec. No., T.S. Size Number) Other fastening _____ (Describe or attach sketch)

7. Jacket Closure: _____
(Describe as ogee and weld, bar, etc. If bar give dimensions, if bolts, describe or sketch)

Drop Weight _____
Charpy Impact _____ ft-lb

8. Design pressure[2] 1250 psi at 575 °F at temp of _____ °F

Items 9 and 10 to be completed for tube sections

9. Tube Sheets: Stationary. Material _____ (Kind & Spec. No.) Dia. _____ (Subject to pressure) Thickness ___ in. Attachment _____ (Welded, Bolted)
Floating. Material _____ Dia. _____ Thickness ___ in. Attachment _____

10. Tubes: Material _____ O.D. _____ in. Thickness _____ inches or gage. Number _____ Type _____ (Str. or U)

Items 11 - 14 incl. to be completed for inner chambers of jacketed vessels, or channels of heat exchangers.

11. Shell: Material _____ T.S. _____ Nominal Thickness ___ in. Corrosion Allowance ___ in. Dia. ___ ft. ___ in. Length ___ ft. ___ in.
(Kind & Spec. No.) (Min. of Range Specified)

12. Seams: Long _____ H.T.[1] _____ R.T. _____ Efficiency _____%
Girth _____ H.T.[1] _____ R.T. _____ No. of Courses _____

13. Heads: (a) Material _____ T.S. _____ (b) Material _____ T.S. _____

	Location	Thickness	Crown Radius	Knuckle Radius	Elliptical Ratio	Concial Apex Angle	Hemispherical Radius	Flat Diameter	Side to Press. (conv. or conc.)
(a)	Top, bottom, ends								
(b)	Channel								

If removable, bolts used (a)_____ (b)_____ (c)_____ Other fastening _____ (Describe or attach sketch)

Drop Weight _____
Charpy Impact _____ ft-lb

14. Design pressure[2] _____ psi at _____ °F at temp of _____ °F

Items below to be completed for all vessels where applicable.

15. Safety Valve Outlets: Number _____ Size _____ Location _____

16. Nozzles:

Purpose (Inlet, Outlet, Drain)	Number	Dia. or Size	Type	Material	Thickness	Reinforcement Material	How Attached

17. Inspection Openings: Manholes, No. _____ Size _____ Location _____
Handholes, No. _____ Size _____ Location _____
Threaded, No. _____ Size _____ Location _____

18. Supports: Skirt _____ (Yes or No) Lugs _____ (Number) Legs _____ (Number) Other _____ (Describe) Attached _____ (Where & How)

1 - If Postweld Heat-Treated.
2 - List other internal or external pressure with coincident temperature when applicable.

W07 No. 01090165 45

FORM N-2 NPT CERTIFICATE HOLDERS' DATA REPORT FOR NUCLEAR PART AND APPURTENANCES*

As required by the Provision of the ASME Code Rules, Section III, Div. 1

Kuldip Singh 7/1/05

1. Manufactured & Certified by : General Electric Company Nuclear Fuel & Components Manufacturing (GE NF&CM)

   2117 Castle Hayne Road, Wilmington, North Carolina 28401

   (Name and Address of NPT Certificate Holder)

   (b) Manufactured for : WNP 2 Richland, Washington 99352

   (Name and Address of N Certificate Holder for completed nuclear component)

2. Identification - Certificate Holder's S/N of Part : A9402 Nat'l Bd. No. N/A

   (a) Constructed According to Drawing No: 919D258G003 Rev 18 Dwg. Prepared by D. L. Peterson

   (b) Description of Part Inspected: Cylinder Tube & Flange

   (c) Applicable ASME Code: Section III , Edition 1974 , Addenda Date W'75 , Case No. 1361-2 Class 1

3. REMARKS: Standard part for use with Reactor. Hydrostatically tested at 1825 psi. min.

   (Brief description of service for which component was designed)

1. Cap 166B9274P001
   SA182 - F316
   3/8" thick x 1 1/16" OD

2. Indicator Tube 167B4908P001
   SA312 - TP316
   3/4" sch 40 - seamless pipe
   0.113" wall thickness
   1.065" max. dia.

3. Plug 159A1176P001
   SA182 - F304
   1/4" thick x 0.812" OD

4. Flange 919D610P001 (719E474)
   SA182 - F304
   3.37" thick x 9 5/8" OD

5. Head 129B3539P005
   SA182 - F304
   7/8" thick x 2.875" dia.

6. Ring Flange 114B5122P002
   SA182 - F304
   1" thick x 5.0" OD x 1.75" ID

7. Cap Screw 117C4516P002
   SA193 - B6
   6 ea. 1/2" dia. on 4 1/8" bolt circle

8. Plug 175A7961P001
   SA182 - F304
   0.38" thick x 1.307" dia.

9. Nut 114B5460P001
   XM - 19 SA479
   1.30" thick x 2.62" dia.

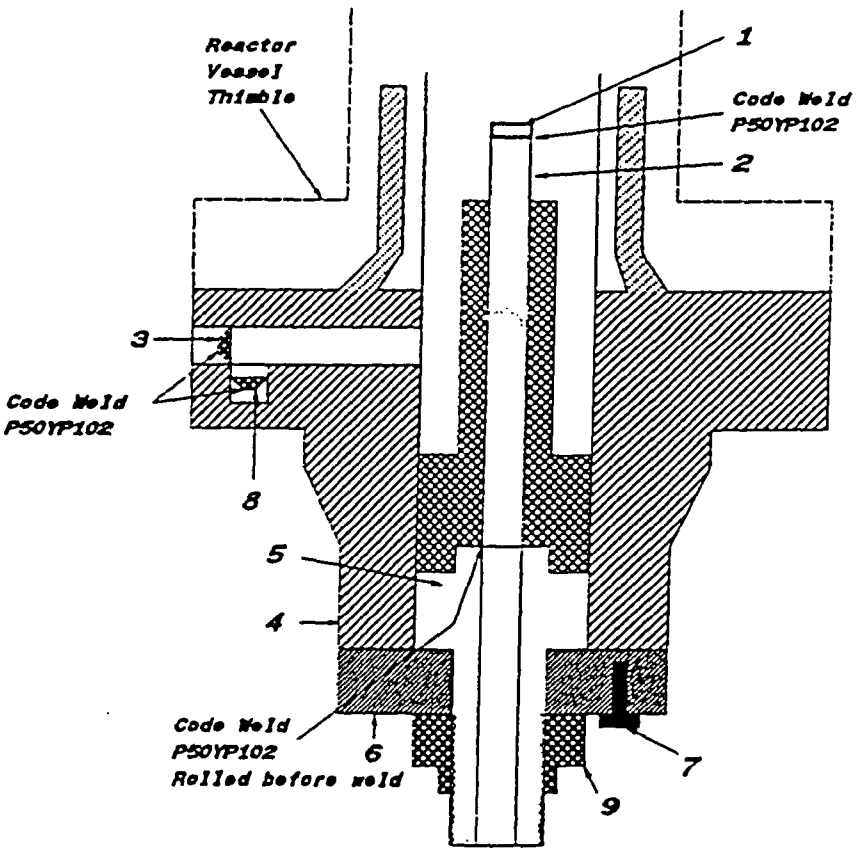

WOT No 01090165 46

ENERGY NORTHWEST
People·Vision·Solutions

FORM NIS-2 OWNER'S REPORT FOR REPAIRS OR REPLACEMENTS
As Required By The Provisions Of The ASME Code Section XI

Date: 06/30/05
Sheet: 1 Of 1
Unit: Not Applicable

1. **Owner:** Energy Northwest
   Address: Columbia Generating Station, North Power Plant Loop, Richland, Washington, 99352
2. **Plant:** Columbia Generating Station
   Address: Columbia Generating Station, North Power Plant Loop, Richland, Washington, 99352
3. **(a) Work Performed By:** Energy Northwest
   (b) Repair Organization P.O. No, Job No, etc.: Energy Northwest
   (c) Type Code Symbol Stamp: Not Applicable
   (d) Certificate Of Authorization No.: Not Applicable
   (e) Expiration Date: Not Applicable
4. **Identification Of System:** Control Rod Drive (CRD) System
5. **(a) Applicable Construction Code:** ASME Section III, Code Class 1, 1974 Edition with Winter 1975 Addenda, Code Case: 1361-2
   (b) Applicable Edition Of ASME Section XI Utilized For Repairs Or Replacements: 1989 Edition with no Addenda, Code Case: None
6. **Identification Of Components Repaired Or Replaced And Replacement Components**

Name Of Component	Name Of Manufacturer	Manufacturer's Serial No	National Board No	Other I.D.	Year Built	Repaired, Replaced Or Replacement	ASME Code Stamped (Yes Or No) Code Class
CRD	GE	6021	N/A	N/A	1974	Replaced	Yes, Code Class 1
CRD	GE	A9448	N/A	N/A	1995	Replacement	Yes, Code Class 1

7. **Description Of Work Performed:** Replaced Control Rod Drive (CRD) assembly at Core Location 50-43. The replacement work was performed in accordance with plant procedure PPM No 10.5.7 "Control Rod Drive Removal And Replacement" as follows:

1) Removed all eight (8) existing cap screws from the CRD assembly bolted flanged connection.
2) Removed existing CRD assembly, Serial No 6021.
3) Performed VT-1 visual examination on all eight (8) new replacement cap screws. VT-1 visual examination results acceptable.
4) Installed replacement CRD assembly, Serial No A9448.
5) Installed eight (8) VT-1 visually examined new replacement cap screws for the CRD assembly bolted flanged connection.
6) Torqued the cap screws for the CRD assembly bolted flanged connection to the required torque values.
7) Performed VT-2 visual examination during pressure test on CRD assembly bolted flanged connection to confirm pressure boundary integrity of the joint. No leakage was observed during pressure test.

NOTES -

1) The replacement CRD assembly, Serial No A9448 is certified to comply with ASME Section III, Code Class 1, 1974 Edition with Winter 1975 Addenda requirements.
2) New replacement cap screws, SA-540 Gr. B23, Class 4, Heat No 14813.
3) VT-1 visual examination Report No 2RPV-020 for the new replacement cap screws.

WOT No 01090165 46

ENERGY NORTHWEST
People·Vision·Solutions

FORM NIS-2 OWNER'S REPORT FOR REPAIRS OR REPLACEMENTS (Back)

8 Tests Conducted: Hydrostatic ☐ *Pneumatic* ☐ *Nominal Operating Pressure* ☐ *Other* ☒

Test Pressure: 1020 Psig *Test Temperature:* 170° F

Component Design Pressure: 1250 Psig *Temperature:* 575° F

9. Remarks: 1) See attached N-2 Code Data Report for the replacement CRD assembly, Serial No A9448.
2) * Pressure test on the CRD bolted flanged connection - Test pressure of 1020 Psig and test temperature of 170° F recorded during ASME Section XI pressure test in accordance with PPM No OSP-RPV-R801 "Reactor Pressure Vessel Leakage Test".

CERTIFICATE OF COMPLIANCE

We certify that the statements made in this Owner's Report are correct and this replacement *conforms to the rules of the ASME Code, Section XI.*
Type Code Symbol Stamp: Not Applicable
Certificate Of Authorization No.: Not Applicable
Expiration Date: Not Applicable

Prepared By Kuldip Singh - Program Lead Engineer (PLE) *Signed By* Kuldip Singh - Program Lead Engineer (PLE)

Date 7/1/05 *Date* 7/1/05

CERTIFICATE OF INSERVICE INSPECTION

I, the undersigned, holding a valid commission issued by the National Board of Boiler and Pressure Vessel Inspectors and the State of Washington *and employed by* Hartford Steam Boiler Of Connecticut of Hartford, Connecticut *have inspected the components described in this Owner's Report during the period* 5-16-2005 *to* 7-11-2005 *and state to the best of my knowledge and belief, the Owner has performed examinations and taken corrective measures described in this Owner's Report in accordance with the requirements of the ASME Code, Section XI.*
By signing this certificate neither the Inspector nor his employer makes any warranty, expressed or implied, concerning the examinations and corrective measures described in this Owner's Report. Furthermore, neither the Inspector nor his employer shall be liable in any manner for any personal injury or property damage or a loss of any kind arising from or connected with this inspection.

Inspector's Signature *Commissions* 10655W A, B, N, I
National Board, State, and Endorsements

Date 7-11-2005

WOT No. 01090165 46

FORM N-2 NPT CERTIFICATE HOLDERS' DATA REPORT FOR NUCLEAR PART AND APPURTENANCES*

As required by the Provision of the ASME Code Rules, Section III, Div. I

1. Manufactured & Certified by : General Electric Company Nuclear Fuel & Components Manufacturing (GE NF & CM)

   2117 Castle Hayne Road, Wilmington, North Carolina 28401

   (Name and Address of NPT Certificate Holder)

   (b) Manufactured for : WNP 2 Richland, Washington 99352

   (Name and Address of N Certificate Holder for completed nuclear component)

2. Identification - Certificate Holder's S/N of Part : A9448 Nat'l Bd. No. N/A

   (a) Constructed According to Drawing No: 919D258G003 Rev 18 Dwg. Prepared by D. L. Peterson

   (b) Description of Part Inspected: Cylinder Tube & Flange

   (c) Applicable ASME Code: Section III , Edition 1974 , Addenda Date W75 , Case No. 1361-2 Class 1

3. REMARKS: Standard part for use with Reactor. Hydrostatically tested at 1825 psi. min.

   (Brief description of service for which component was designed)

Sheet 1 of 2

We certify that the statements in this report are correct and this vessel part or appurtenance as defined in the code conforms to the rules of construction of the ASME Code Section III. (The applicable Designed Specification and Stress Report are not the responsibility of the NPT Certificate Holder for parts. An NPT Certification Holder for appurtenances is responsible for furnishing a separate Design Specification and Stress Report if the appurtenance is not included in the component Design Specification and Stress Report).

Date: 06/27/95 Signed GE - NEBG - NF & CM - QA By

(NPT Certificate Holder) (SC QA Representive)

Certificate of Authorization Expires: 6/16/96 Certification of Authorization No. : NPT N - 1151

Certification of Design for Appurtenance

Design information on file at GE Company, San Jose, California

Stress analysis report on file at GE Company, San Jose, California

DC22A6253 Rev. 1
Design specification certified by Bjorn Haaberg Prof. Eng. State Calif. Reg. No. 15570

DC22A6254 Rev 1
Stress analysis report certified by Edward Yoshio Prof. Eng. State Calif. Reg. No. M018646

Certification of Shop Inspection

I, the undersigned, holding a valid commission by the National Board of Boiler and Pressure Inspectors and/or the State or Province of North Carolina and employed by Department of Labor of State of North Carolina have inspected the part of a pressure vessel described in this Partial Data Report on 6/16, 1995, and state that to the best of my knowledge and belief, the NPT Certificate Holder has constructed this part in accordance with the ASME Code Section III.

By signing this certificate, neither the Inspector nor his employer makes any warranty, expressed or implied, concerning the part described in the Partial Data Report. Furthermore, neither the Inspector nor his employer shall be liable in any manner for any personal injury or property damages or a loss of any kind arising from or connected with this inspection.

6/27, 1995 — Date

Inspector's Signature

NC 1231, Ohio, WC 3686 PA — National Board, State, Province And No.

*Supplemental sheets in form of lists, sketches or drawing may be used provided (1) size is 8-1/2" x 11", (2) information in 1-2 on this Data Report is included on each sheet, and (3) each sheet is numbered and number of sheets is recorded in Item 3. "REMARKS".

(07/90)

FORM N-2 (back)

Items 4-8 Incl. to be completed for single wall vessels, jackets vessels, or shells of heat exchangers.

4. Shell: Material _____ T.S. _____ Nominal Thickness ___ in. Corrosion Allowance ___ in. Dia. ___ ft. ___ in. Length ___ ft. ___
(Kind & Spec. No.) (Min. of Range Specified)

5. Seams: Long _____ H.T.[1] _____ R.T. _____ Efficiency _____%
Girth _____ H.T.[1] _____ R.T. _____ No. of Courses _____

6. Heads: (a) Material _____ T.S. _____ (b) Material _____ T.S. _____

	Location (Top Bottom, Ends)	Thickness	Crown Radius	Knuckle Radius	Elliptical Ratio	Concial Apex Angle	Hemispherical Radius	Flat Diameter	Side to Press. (conv. or conc.)
(a)									
(b)									

If removable, bolts used _____ (Material, Spec. No., T.S. Size Number) Other fastening _____ (Describe or attach sketch)

7. Jacket Closure: _____
(Describe as ogee and weld, bar, etc. If bar give dimensions, if bolts, describe or sketch)

Drop Weight _____
Charpy Impact _____ ft-lb

8. Design pressure[2] 1250 psi at 575 °F at temp of _____ °F

Items 9 and 10 to be completed for tube sections

9. Tube Sheets: Stationary. Material _____ (Kind & Spec. No.) Dia. _____ (Subject to pressure) Thickness ___ in. Attachment _____ (Welded, Bolted)
Floating. Material _____ Dia. _____ Thickness ___ in. Attachment _____

10. Tubes: Material _____ O.D. _____ in. Thickness _____ Inches or gage. Number _____ Type _____ (Str. or U)

Items 11 - 14 incl. to be completed for inner chambers of jacketed vessels, or channels of heat exchangers.

11. Shell: Material _____ T.S. _____ Nominal Thickness ___ in. Corrosion Allowance ___ in. Dia. ___ ft. ___ in. Length ___ ft. ___
(Kind & Spec. No.) (Min. of Range Specified)

12. Seams: Long _____ H.T.[1] _____ R.T. _____ Efficiency _____%
Girth _____ H.T.[1] _____ R.T. _____ No. of Courses _____

13. Heads: (a) Material _____ T.S. _____ (b) Material _____ T.S. _____

	Location	Thickness	Crown Radius	Knuckle Radius	Elliptical Ratio	Concial Apex Angle	Hemispherical Radius	Flat Diameter	Side to Press. (conv. or conc.)
(a)	Top, bottom, ends								
(b)	Channel								

If removable, bolts used (a)_____(b)_____(c)_____ Other fastening _____ (Describe or attach sketch)

Drop Weight _____
Charpy Impact _____ ft-lb

14. Design pressure[2] _____ psi at _____ °F at temp of _____ °F

Items below to be completed for all vessels where applicable.

15. Safety Valve Outlets: Number _____ Size _____ Location _____

16. Nozzles:

Purpose (Inlet, Outlet, Drain)	Number	Dia. or Size	Type	Material	Thickness	Reinforcement Material	How Attached

17. Inspection Openings: Manholes, No. _____ Size _____ Location _____
Handholes, No. _____ Size _____ Location _____
Threaded, No. _____ Size _____ Location _____

18. Supports: Skirt _____ (Yes or No) Lugs _____ (Number) Legs _____ (Number) Other _____ (Describe) Attached _____ (Where & How)

1 - If Postweld Heat-Treated.
2 - List other internal or external pressure with coincident temperature when applicable.

W07 No. 01090165 46

FORM N-2 NPT CERTIFICATE ..OLDERS' DATA REPORT FOR NUCLEAR ART AND APPURTENANCES*
As required by the Provision of the ASME Code Rules, Section III, Div. I

7/1/05

1. Manufactured & Certified by : General Electric Company Nuclear Fuel & Components Manufacturing (GE NF & CM)

2117 Castle Hayne Road, Wilmington, North Carolina 28401
(Name and Address of NPT Certificate Holder)

(b) Manufactured for : WNP 2 Richland, Washington 99352
(Name and Address of N Certificate Holder for completed nuclear component)

2. Identification - Certificate Holder's S/N of Part : A9448 Nat'l Bd. No. N/A

(a) Constructed According to Drawing No: 919D258G003 Rev 18 Dwg. Prepared by D. L. Peterson

(b) Description of Part Inspected: Cylinder Tube & Flange

(c) Applicable ASME Code: Section III , Edition 1974 , Addenda Date W'75 , Case No. 1361-2 Class 1

3. REMARKS: Standard part for use with Reactor. Hydrostatically tested at 1825 psi. min.
(Brief description of service for which component was designed)

Sheet 2 of 2

1. Cap 166B9274P001
SA182 - F316
3/8" thick x 1 1/16" OD

2. Indicator Tube 167B4908P001
SA312 - TP316
3/4" sch 40 - seamless pipe
0.113" wall thickness
1.065" max. dia.

3. Plug 159A1176P001
SA182 - F304
1/4" thick x 0.812" OD

4. Flange 919D610P001 (719E474)
SA182 - F304
3.37" thick x 9 5/8" OD

5. Head 129B3539P005
SA182 - F304
7/8" thick x 2.875" dia.

6. Ring Flange 114B5122P002
SA182 - F304
1" thick x 5.0" OD x 1.75" ID

7. Cap Screw 117C4516P002
SA193 - B6
6 ea. 1/2" dia. on 4 1/8" bolt circle

8. Plug 175A7961P001
SA182 - F304
0.38" thick x 1.307" dia.

9. Nut 114B5460P001
XM - 19 SA479
1.30" thick x 2.62" dia.

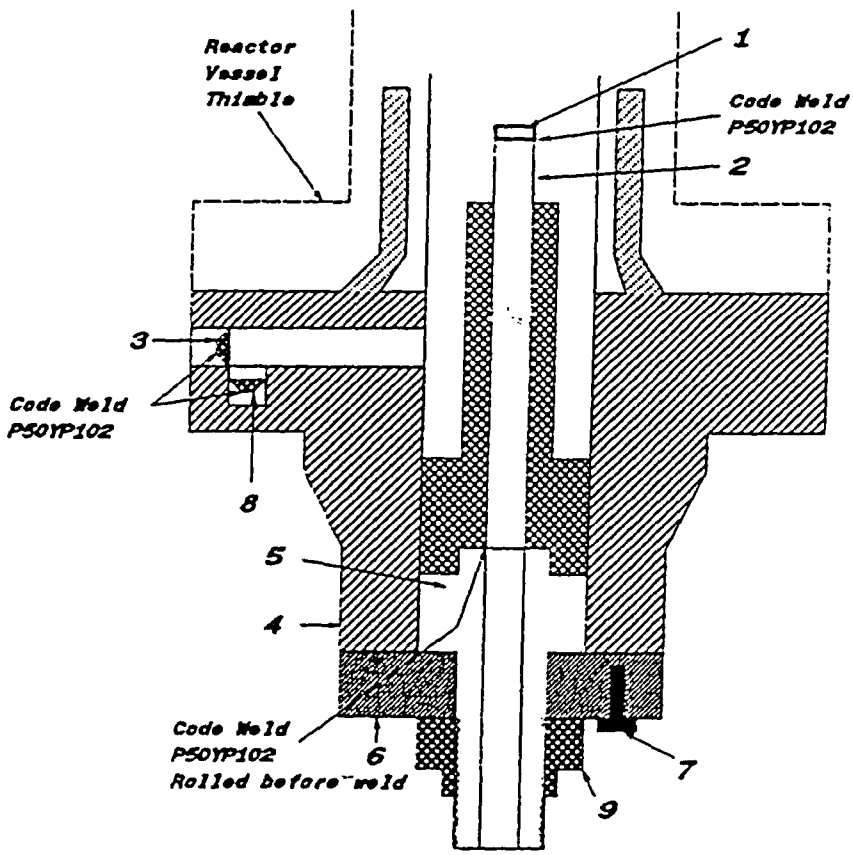

WOT No 01090165 47

ENERGY NORTHWEST
People·Vision·Solutions

FORM NIS-2 OWNER'S REPORT FOR REPAIRS OR REPLACEMENTS
As Required By The Provisions Of The ASME Code Section XI

Date: 06/30/05
Sheet: 1 Of 1
Unit: Not Applicable

1. **Owner:** Energy Northwest
   Address: Columbia Generating Station, North Power Plant Loop, Richland, Washington, 99352
2. **Plant:** Columbia Generating Station
   Address: Columbia Generating Station, North Power Plant Loop, Richland, Washington, 99352
3. (a) **Work Performed By:** Energy Northwest
   (b) **Repair Organization P.O. No, Job No, etc.:** Energy Northwest
   (c) **Type Code Symbol Stamp:** Not Applicable
   (d) **Certificate Of Authorization No.:** Not Applicable
   (e) **Expiration Date:** Not Applicable
4. **Identification Of System:** Control Rod Drive (CRD) System
5. (a) **Applicable Construction Code:** ASME Section III, Code Class 1, 1971 Edition with no Addenda, Code Case: 1361-1
   (b) **Applicable Edition Of ASME Section XI Utilized For Repairs Or Replacements:** 1989 Edition with no Addenda, Code Case: None
6. **Identification Of Components Repaired Or Replaced And Replacement Components**

Name Of Component	Name Of Manufacturer	Manufacturer's Serial No	National Board No	Other I.D.	Year Built	Repaired, Replaced Or Replacement	ASME Code Stamped (Yes Or No) Code Class
CRD	GE	6746*	N/A	N/A	1975	----------	Yes, Code Class 1

7. **Description Of Work Performed:** Removed and reinstalled Control Rod Drive (CRD) assembly at Core Location 58-23*. The work was performed in accordance with plant procedure PPM No 10.5.7 "Control Rod Drive Removal And Replacement" as follows:

1) Removed all eight (8) existing cap screws from the CRD assembly bolted flanged connection.
2) Removed existing CRD assembly, Serial No 6746*.
3) Performed VT-1 visual examination on all eight (8) new replacement cap screws. VT-1 visual examination results acceptable.
4) Reinstalled existing CRD assembly, Serial No 6746*.
5) Installed eight (8) VT-1 visually examined new replacement cap screws for the CRD assembly bolted flanged connection.
6) Torqued the cap screws for the CRD assembly bolted flanged connection to the required torque values.
7) Performed VT-2 visual examination during pressure test on CRD assembly bolted flanged connection to confirm pressure boundary integrity of the joint. No leakage was observed during pressure test.

NOTES -

1) New replacement cap screws, SA-540 Gr. B23, Class 4, Heat No 14813.
2) VT-1 visual examination Report No 2RPV-020 for the new replacement cap screws.
3) * The existing CRD assembly, Serial No 6746 was removed and reinstalled at Core Location 58-23 due to interferences with valve RCC-V-89.

WOT No 01090165 47

ENERGY NORTHWEST
People·Vision·Solutions

FORM NIS-2 OWNER'S REPORT FOR REPAIRS OR REPLACEMENTS (Back)

8 Tests Conducted: Hydrostatic ☐ *Pneumatic* ☐ *Nominal Operating Pressure* ☐ *Other* ☐

Test Pressure: 1020 Psig *Test Temperature:* 170° F

Component Design Pressure: 1250 Psig *Temperature:* 575° F

9. Remarks: * Pressure test on the CRD bolted flanged connection - Test pressure of 1020 Psig and test temperature of 170° F recorded during ASME Section XI pressure test in accordance with PPM No OSP-RPV-R801 "Reactor Pressure Vessel Leakage Test".

CERTIFICATE OF COMPLIANCE

We certify that the statements made in this Owner's Report are correct and this replacement *conforms to the rules of the ASME Code, Section XI.*

Type Code Symbol Stamp: Not Applicable

Certificate Of Authorization No.: Not Applicable

Expiration Date: Not Applicable

Prepared By Kuldip Singh - Program Lead Engineer (PLE) *Signed By* Kuldip Singh - Program Lead Engineer (PLE)

Date 7/1/05 *Date* 7/1/05

CERTIFICATE OF INSERVICE INSPECTION

I, the undersigned, holding a valid commission issued by the National Board of Boiler and Pressure Vessel Inspectors and the State of Washington *and employed by* Hartford Steam Boiler Of Connecticut of Hartford, Connecticut *have inspected the components described in this Owner's Report during the period* 5-6-2005 *to* 7-1-2005 *and state to the best of my knowledge and belief, the Owner has performed examinations and taken corrective measures described in this Owner's Report in accordance with the requirements of the ASME Code, Section XI.*

By signing this certificate neither the Inspector nor his employer makes any warranty, expressed or implied, concerning the examinations and corrective measures described in this Owner's Report. Furthermore, neither the Inspector nor his employer shall be liable in any manner for any personal injury or property damage or a loss of any kind arising from or connected with this inspection.

Inspector's Signature *Commissions* 10655W A, B, N, I
National Board, State, and Endorsements

Date 7-1-2005

FORM N-2 MANUFACTURERS DATA REPORT FOR NUCLEAR PART AND APPURTENANCES

As required by the Provisions of the ASME Code Rules

1. (a) Manufactured by General Electric Company, Castle Hayne Rd., Wilmington, N. C.
(Name and address of Manufacturer of part)

(b) Manufactured for General Electric Company, San Jose, California
(Name and address of Manufacturer of completed nuclear component)

2. Identification-Manufacturer's Serial No. of Part 6746 Nat'l Bd. No.

(a) Constructed According to Drawing No. 761E387G2 Drawing Prepared by D. L. Peterson

(b) Description of Part Inspected Control Rod Drive, Model #7RDB144 C1

(c) Applicable ASME Code: Section III, Edition 1971, Addenda date None, Case No. 1361-1 Class 1

3. Remarks: Standard part for use with Reactor. Hydrostatically tested at 1620 psi minimum.
(Brief description of service for which component was designed)

FOR INFORMATION ONLY

We certify that the statements made in this report are correct and this vessel part or appurtenance as defined in the Code conforms to the rules of construction of the ASME Code Section III.
(The applicable Design Specification and Stress Report are not the responsibility of the part Manufacturer. An appurtenance Manufacturer is responsible for furnishing a separate Design Specification and Stress Report if the appurtenance is not included in the component Design Specification and Stress Report.)

Date July 28 1975 Signed GE, BWRSD - REM By
(Manufacturer)

Certificate of Authorization Expires June 20, 1978 Certificate of Authorization No. NPT - 462

CERTIFICATION OF DESIGN FOR APPURTENANCE (when applicable)

Design information on file at General Electric Co., BWRSD-REM, Castle Hayne Rd., Wilmington

Stress analysis report on file at General Electric Co., BWRSD-REM, Castle Hayne Rd., Wilmington

Design specifications certified by Vernon W. Pence Prof. Eng. State Calif. Reg. No. 14488

Stress analysis report certified by Vernon W. Pence Prof. Eng. State Calif. Reg. No. 14488

CERTIFICATE OF SHOP INSPECTION

I, the undersigned, holding a valid commission issued by the National Board of Boiler and Pressure Vessel Inspectors and/or the State or Province of North Carolina and employed by Department of Labor of State of North Carolina have inspected the part of a pressure vessel described in this Manufacturer's Partial Data Report on July 28 1975, and state that to the best of my knowledge and belief, the Manufacturer has constructed this part in accordance with the ASME Code Section III.

By signing this certificate, neither the Inspector nor his employer makes any warranty, expressed or implied, concerning the part described in this Manufacturer's Partial Data Report. Furthermore, neither the Inspector nor his employer shall be liable in any manner for any personal injury or property damage or a loss of any kind arising from or connected with this inspection.

Date July 28 1975

E. L. Sherrill
Inspector's Signature

Commissions NC 723, PA. EC 1766, Ohio
National Board, State, Province and No.

ZX00368289

761E387G2
6746

FORM N-2 (back)

Items 1–8 incl. to be completed for single wall vessels, jackets of jacketed vessels, or shells of heat exchangers.

1. Shell: Material ____ (Kind & Spec. No.) T.S. ____ (Min. of Range Specified) Nominal Thickness ____ in. Corrosion Allowance ____ in. Dia. ____ ft. ____ in. Length ____ ft. ____ in.

5. Seams: Long ____ H.T.[1] ____ R.T. ____ Efficiency ____ %

Girth ____ H.T.[1] ____ R.T. ____ No. of Courses ____

6. Heads: (a) Material ____ T.S. ____ (b) Material ____ T.S. ____

Location (Top, bottom, ends)	Thickness	Crown Radius	Knuckle Radius	Elliptical Ratio	Conical Apex Angle	Hemispherical Radius	Flat Diameter	Side to Press. (Conv. or Conc.)
(a)								
(b)								

If removable, bolts used ____ (Material, Spec. No., T.S., Size, Number) Other fastening ____ (Describe or attach sketch)

7. Jacket Closure: ____ (Describe as ogee and weld, bar, etc. If bar give dimensions, if bolted, describe or sketch)

8. Design pressure[2] 1250 psi at 575 °F Drop Weight ____ Charpy Impact ____ ft-lb. at temp. of ____ °F

FOR INFORMATION ONLY

Items 9 and 10 to be completed for tube sections

9. Tube Sheets: Stationary. Material ____ (Kind & Spec. No.) Dia. ____ (Subject to pressure) Thickness ____ in. Attachment ____ (Welded, Bolted)

Floating. Material ____ Dia. ____ Thickness ____ in. Attachment ____

10. Tubes: Material ____ O.D. ____ in. Thickness ____ inches or gage. Number ____ Type ____ (Str. or U)

Items 11–14 incl. to be completed for inner chambers of jacketed vessels, or channels of heat exchangers.

11. Shell: Material ____ (Kind & Spec. No.) T.S. ____ (Min. of Range Specified) Nominal Thickness ____ in. Corrosion Allowance ____ in. Dia. ____ ft. ____ in. Length ____ ft. ____ in.

12. Seams: Long ____ H.T.[1] ____ R.T. ____ Efficiency ____ %

Girth ____ H.T.[1] ____ R.T. ____ No. of Courses ____

13. Heads (a) Material ____ T.S. ____ (b) Material ____ T.S. ____

Location	Thickness	Crown Radius	Knuckle Radius	Elliptical Ratio	Conical Apex Angle	Hemispherical Radius	Flat Diameter	Side to Press. (Conv. or Conc.
(a) Top, bottom, ends								
(b) Channel								

If removable, bolts used (a) ____ (b) ____ (c) ____ Other fastening ____ (Describe or attach sketch)

14. Design pressure[2] ____ psi at ____ °F Drop Weight ____ Charpy Impact ____ ft-lb. at temp. of ____ °F

Items below to be completed for all vessels where applicable.

15. Safety Valve Outlets: Number ____ Size ____ Location ____

16. Nozzles:

Purpose (Inlet, Outlet, Drain)	Number	Dia. or Size	Type	Material	Thickness	Reinforcement Material	How Attached

17. Inspection Openings: Manholes, No. ____ Size ____ Location ____
Handholes, No. ____ Size ____ Location ____
Threaded, No. ____ Size ____ Location ____

18. Supports: Skirt ____ (Yes or No) Lugs ____ (Number) Legs ____ (Number) Other ____ (Describe) Attached ____ (Where & How)

[1] If Postweld Heat-Treated.
[2] Less [illegible] at temperature when [illegible].

ZX00368290

WOT No 01090165 48

ENERGY NORTHWEST
People·Vision·Solutions

FORM NIS-2 OWNER'S REPORT FOR REPAIRS OR REPLACEMENTS
As Required By The Provisions Of The ASME Code Section XI

Date: 06/30/05
Sheet: 1 Of 1
Unit: Not Applicable

1. **Owner:** Energy Northwest
   Address: Columbia Generating Station, North Power Plant Loop, Richland, Washington, 99352
2. **Plant:** Columbia Generating Station
   Address: Columbia Generating Station, North Power Plant Loop, Richland, Washington, 99352
3. **(a) Work Performed By:** Energy Northwest
   (b) Repair Organization P.O. No, Job No, etc.: Energy Northwest
   (c) Type Code Symbol Stamp: Not Applicable
   (d) Certificate Of Authorization No.: Not Applicable
   (e) Expiration Date: Not Applicable
4. **Identification Of System:** Control Rod Drive (CRD) System
5. **(a) Applicable Construction Code:** ASME Section III, Code Class 1, 1974 Edition with Winter 1975 Addenda, Code Case: 1361-2
   (b) Applicable Edition Of ASME Section XI Utilized For Repairs Or Replacements: 1989 Edition with no Addenda, Code Case: None
6. **Identification Of Components Repaired Or Replaced And Replacement Components**

Name Of Component	Name Of Manufacturer	Manufacturer's Serial No	National Board No	Other I.D.	Year Built	Repaired, Replaced Or Replacement	ASME Code Stamped (Yes Or No) Code Class
CRD	GE	6091	N/A	N/A	1974	Replaced	Yes, Code Class 1
CRD	GE	A8743	N/A	N/A	1988	Replacement	Yes, Code Class 1

7. **Description Of Work Performed:** Replaced Control Rod Drive (CRD) assembly at Core Location 54-35. The replacement work was performed in accordance with plant procedure PPM No 10.5.7 "Control Rod Drive Removal And Replacement" as follows:

1) Removed all eight (8) existing cap screws from the CRD assembly bolted flanged connection.
2) Removed existing CRD assembly, Serial No 6091.
3) Performed VT-1 visual examination on all eight (8) new replacement cap screws. VT-1 visual examination results acceptable.
4) Installed replacement CRD assembly, Serial No A8743.
5) Installed eight (8) VT-1 visually examined new replacement cap screws for the CRD assembly bolted flanged connection.
6) Torqued the cap screws for the CRD assembly bolted flanged connection to the required torque values.
7) Performed VT-2 visual examination during pressure test on CRD assembly bolted flanged connection to confirm pressure boundary integrity of the joint. No leakage was observed during pressure test.

NOTES -

1) The replacement CRD assembly, Serial No A8743 is certified to comply with ASME Section III, Code Class 1, 1974 Edition with Winter 1975 Addenda requirements.
2) New replacement cap screws, SA-540 Gr. B23, Class 4, Heat No 14813.
3) VT-1 visual examination Report No 2RPV-020 for the new replacement cap screws.

WOT No 01090165 48

ENERGY NORTHWEST
People · Vision · Solutions

FORM NIS-2 OWNER'S REPORT FOR REPAIRS OR REPLACEMENTS (Back)

8 Tests Conducted: Hydrostatic ☐ *Pneumatic* ☐ *Nominal Operating Pressure* ☐ *Other* ☐

Test Pressure: 1020 Psig *Test Temperature:* 170° F
Component Design Pressure: 1250 Psig *Temperature:* 575° F

9. Remarks: 1) See attached N-2 Code Data Report for the replacement CRD assembly, Serial No A8743.
2) * Pressure test on the CRD bolted flanged connection - Test pressure of 1020 Psig and test temperature of 170° F recorded during ASME Section XI pressure test in accordance with PPM No OSP-RPV-R801 "Reactor Pressure Vessel Leakage Test".

CERTIFICATE OF COMPLIANCE

We certify that the statements made in this Owner's Report are correct and this replacement *conforms to the rules of the ASME Code, Section XI.*
Type Code Symbol Stamp: Not Applicable
Certificate Of Authorization No.: Not Applicable
Expiration Date: Not Applicable

Prepared By Kuldip Singh - Program Lead Engineer (PLE) *Signed By* Kuldip Singh - Program Lead Engineer (PLE)

Date 7/1/05 *Date* 7/1/05.

CERTIFICATE OF INSERVICE INSPECTION

I, the undersigned, holding a valid commission issued by the National Board of Boiler and Pressure Vessel Inspectors and the State of Washington *and employed by* Hartford Steam Boiler Of Connecticut of Hartford, Connecticut *have inspected the components described in this Owner's Report during the period* 5-6-2005 *to* 7-11-2005 *and state to the best of my knowledge and belief, the Owner has performed examinations and taken corrective measures described in this Owner's Report in accordance with the requirements of the ASME Code, Section XI.*
By signing this certificate neither the Inspector nor his employer makes any warranty, expressed or implied, concerning the examinations and corrective measures described in this Owner's Report. Furthermore, neither the Inspector nor his employer shall be liable in any manner for any personal injury or property damage or a loss of any kind arising from or connected with this inspection.

Inspector's Signature *Commissions* 10655 W A, B, N, T
National Board, State, and Endorsements

Date 7-11-2005

W07 No. 01090165 48

7/1/05

FORM N-2 NPT CERTIFICATE HOLDERS' DATA REPORT FOR NUCLEAR PART AND APPURTENANCES*
As required by the Provision of the ASME Code Rules, Section III, Div. 1

1. Manufactured & Certified by: GE Company, 2117 Castle Hayne Rd., Wilmington, N.C. 28402
(Name and Address of NPT Certificate Holder)

(b) Manufactured for: WNP-2, RICHLAND, Wa. 99352
(Name and Address of N Certificate Holder for completed nuclear component)

2. Identification-Certificate Holders's S/N of Part: A8743 Nat'l Bd. No. N/A

(a) Constructed According to Drawing No: 919D258G003 Dwg. Prepared by D. L. Peterson

(b) Description of Part Inspected: CYLINDER TUBE & FLANGE

(c) Applicable ASME Code: Section III, Edition 1974, Addenda Date W'75 Case No. 1361-2 Class 1

3. REMARKS: Sub-assembly of Control Rod Drive for use with reactor.
(Brief description of service for which component was designed)
Hydrostatically tested at 1825 psi. min.

*Sheet 1 of 2

We certify that the statements in this report are correct and this vessel part or appurtenance as defined in the code conforms to the rules of construction of the ASME Code Section III. (The applicable Designed Specification and Stress Report are not the responsibility of the NPT Certificate Holder for parts. An NPT Certification Holder for appurtenances is responsible for furnishing a separate Design Specification and Stress Report if the appurtenance is not included in the component Design Specification and Stress Report).

DATE: 12/31, 19 88 Signed GE-NEBG-NF&CM-QA By
(NPT Certificate Holder)

Certificate Of Authorization Expires: 6/16/90 Certification of Authorization No.: NPT N-1151

CERTIFICATION OF DESIGN FOR APPURTENANCE

Design information on file at GE COMPANY, SAN JOSE, CALIFORNIA

Stress analysis report on file at GE COMPANY, SAN JOSE, CALIFORNIA

DC22A6253 Rev. 0
Design specification certified by BJORN HAABERG Prof. Eng. State CALIF. Reg. No. 15570

DC22A6254 Rev. 0.
Stress analysis report certified by EDWARD YOSHIO Prof. Eng. State CALIF. Reg. No. M018646

CERTIFICATION OF SHOP INSPECTION

I, the undersigned, holding a valid commission by the National Board of Boiler and Pressure Inspectors and/or the State or Province of NORTH CAROLINA and employed by DEPARTMENT OF LABOR of STATE OF NORTH CAROLINA have inspected the part of a pressure vessel described in this Partial Data Report on 12-31 1988, and state that to the best of my knowledge and belief, the NPT Certificate Holder has constructed this part in accordance with the ASME Code Section III.

By signing this certificate, neither the Inspector nor his employer makes any warranty, expressed or implied, concerning the part described in the Partial Data Report. Furthermore, neither the Inspector nor his employer shall be liable in any manner for any personal injury or property damages or a loss of any kind arising from or connected with this inspection.

12-31, 1988 — DATE
Inspector's Signature
NC 779, PA WC2L60, OHW — National Board, State, Province and No.

*Supplemental sheets in form of lists, sketches or drawing may be used provided (1) size is 8-1/2" X 11", (2) information in 1-2 on this Data Report is included on each sheet, and (3) each sheet is numbered and number of sheets is recorded in Item 3. "REMARKSs"

(10/77)

VERIFIED & ACCEPTED
1-18-89
R.I. Inspector Date

FORM M-2 (back)

Items 4-8 Incl. to be completed for single wall vessels, jackets vessels, or shells of heat exchangers.

4. Shell: Material_____ T.S._____ Nominal Thickness___in. Corrosion Allowance___in Dia.___ft.___in. Length___ft.___in.
(Kind & Spec.No) (Min.ofRange Specified)

5. Seams: Long_____ H.T.[1]_____ R.T._____ Efficiency_____%

Girth_____ H.T.[1]_____ R.T._____ No. of Courses_____

6. Heads: (a) Material_____ T.S._____ (b)Material_____ T.S._____

Location (Top Bottom,Ends)	Thickness	Crown Radius	Knuckle Radius	Elliptical Ratio	Concial Apex Angle	Hemispherical Radius	Flat Diameter	Side to Press. (conv.or conc.)
(a)_____	_____	_____	_____	_____	_____	_____	_____	_____
(b)_____	_____	_____	_____	_____	_____	_____	_____	_____

If removable, bolts used_____ Other fastening_____
(Material,Spec.No., T.S. Size Number) (Describe or attach sketch)

7. Jacket Closure:_____
(Describe as ogee and weld,bar,etc. If bar give dimensions, if bolts, describe or sketch)

8. Design Pressure [2] 1250 psi at 575 °F

Drop Weight_____
Charpy Impact_____ ft-lb
at temp. of_____ °f

Items 9 and 10 to be completed for tube sections.

9. Tube Sheets: Stationary Mat'l._____ Dia._____ Thickness___in. Attachment_____
(Kind of Spec. No.) (Subj.to Press.) (Welded, Bolted)
Floating. Material _____ Dia._____ Thickness___in. Attachment_____

10. Tubes: Material_____ O.D.___in. Thickness_____ inches or gage. Number_____ Type_____
(Str. or U)

Items 11-14 incl. to be completed for inner chambers of jacketed vessels, or channels of heat exchangers

11. Shell: Material_____ T.S._____ Nominal Thickness___in. Corrosion Allowance___in. Dia.___ft.___in___Length___ft.___in.
(Kind&Spec.No.) (Min.ofRange Specified)

12. Seams: Long_____ H.T.[1]_____ R.T._____ Efficiency_____%
Girth_____ H.T.[1]_____ R.T._____ No. of Courses_____

13. Heads (a) Material_____ T.S._____ (b)Material_____ T.S._____

Location (a)Top, Bottom, End	Ticnkess	Crown Radius	Knucle Radius	Elliptical Ratio	Concial Apex Angle	Hemispherical Radius	Fat Diameter	Side to Press (Conv.or Conc.)
(b)Channel	_____	_____	_____	_____	_____	_____	_____	_____

If removable, bolts used (a)_____ (b)_____ (c)_____ Other Fastening_____
(Describe or attach sketch

14. Design pressure[2]_____ psi at_____ °F

Drop Weight_____,
Charpy Impact_____ ft-lb
at temp. of _____ °F

Items below to be completed for all vessels where applicable.

15. Safety Valve Outlets: Number_____ Size_____ Location_____

16. Nozzles:

Purpose (Inlet Outlet, Drain)	Number	Dia or Size	Type	Material	Thickness	Reinforcement Material	Attached
_____	_____	_____	_____	_____	_____	_____	_____
_____	_____	_____	_____	_____	_____	_____	_____

17. Inspection Openings: Manholes, No._____ Size_____ Location_____
Handles, No._____ Size_____ Location_____
Threaded, No._____ Size_____ Location_____

18. Supports: Shirt_____ Lugs_____ Legs_____ Other_____ Attached_____
(Yes or No) (Number) (Number) (Describe) (Where & How)

[1] If Postweld Heat-Treated.

[2] List other internal or external pressure with conincident temperature when applicalbe.

WO1 No. 01090165 48

FORM N-2 NPT CERTIFICATE HOLDERS' DATA REPORT FOR NUCLEAR PART AND APPURTENANCES*
As required by the Provision of the ASME Code Rules, Section III, Div. I

7/1/05

.. nufactured & Certified by: GE Company, 2117 Castle Hayne Rd., Wilmington, N.C. 28402
(Name and Address of NPT Certificate Holder)

(b) Manufactured for: WNP-2, RICHLAND, Wa. 99352
(Name and Address of N Certificate Holder for completed nuclear component)

:. Identification-Certificate Holders's S/N of Part: A8743 Nat'l Bd. N. N/A

(a) Constructed According to Drawing No: 919D258G003 Dwg. Prepared by D. L. Peterson

(b) Description of Part Inspected: CYLINDER TUBE & FLANGE

(C) Applicable ASME Code: Section III, Edition 1974, Addenda Date W'75, Case No. 1361-2 Class 1

REMARKS: Sub-assembly of Control Rod Drive for use with reactor.
(Brief description of service for which component was designed)
Hydrostatically tested at 1825 psi. min.

*Sheet 2 of 2

1. Cap 167A2343P1
   SA182-F304
   3/8 thick X 1 1/16 OD

2. Indicator Tube 104B1336P3
   SA312-TP316
   3/4 sch 40-seamless pipe
   0.113 wall thickness
   1.065 max. dia.

3. Plug 159A1176P1
   SA182-F304
   1/4 thick x 0.812 OD

4. Flange 919D610P1 (719E474)
   SA182-F304
   3.37 thick x 9 5/8 OD

5. Head 129B3539P3, P5
   SA182-F304
   7/8 thick x 2.875 Dia.

6. Ring Flange 114B5122P2
   SA182-F304
   1" thick x 5.0 OD x 1.75 ID

7. Cap Screw 117C4516P2
   SA193-B6
   6 ea. 1/2 dia. on 4 1/8 bolt circle

8. Plug 175A7961P1
   SA182-F304
   0.38 thick x 1.307 dia.

. Nut 114B5460P1
   SA193-B8A
   1.30 thick x 2.62 dia.

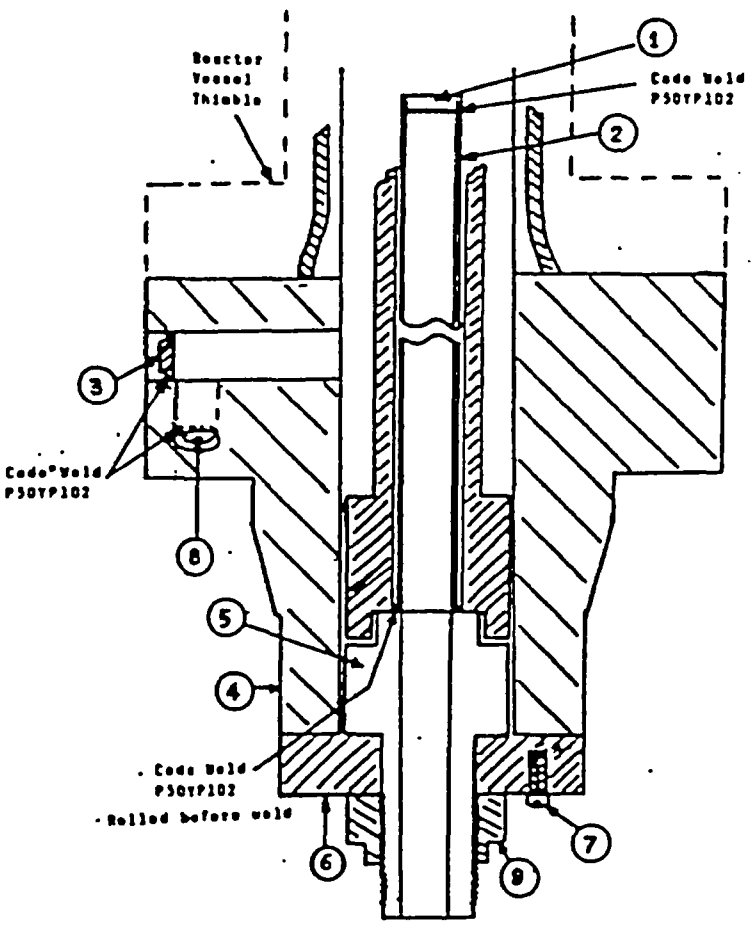

WOT No 01098605 04

ENERGY NORTHWEST
People·Vision·Solutions

FORM NIS-2 OWNER'S REPORT FOR REPAIRS OR REPLACEMENTS
As Required By The Provisions Of The ASME Code Section XI

Date: 06/29/05
Sheet: 1 Of 1
Unit: Not Applicable

1. **Owner:** Energy Northwest
   Address: Columbia Generating Station, North Power Plant Loop, Richland, Washington, 99352
2. **Plant:** Columbia Generating Station
   Address: Columbia Generating Station, North Power Plant Loop, Richland, Washington, 99352
3. (a) **Work Performed By:** Energy Northwest
   (b) **Repair Organization P.O. No, Job No, etc.:** Energy Northwest
   (c) **Type Code Symbol Stamp:** Not Applicable
   (d) **Certificate Of Authorization No.:** Not Applicable
   (e) **Expiration Date:** Not Applicable
4. **Identification Of System:** Control Rod Drive (CRD) System
5. (a) **Applicable Construction Code:** ASME Section III, Code Class 1, 1974 Edition with Winter 1975 Addenda, Code Case: 1361-2
   (b) **Applicable Edition Of ASME Section XI Utilized For Repairs Or Replacements:** 1989 Edition with no Addenda, Code Case: None
6. **Identification Of Components Repaired Or Replaced And Replacement Components**

Name Of Component	Name Of Manufacturer	Manufacturer's Serial No	National Board No	Other I.D.	Year Built	Repaired, Replaced Or Replacement	ASME Code Stamped (Yes Or No) Code Class
CRD	GE	A9118*	N/A	N/A	1993	Replaced	Yes, Code Class 1
CRD	GE	A9330*	N/A	N/A	1995	Replacement	Yes, Code Class 1

7. **Description Of Work Performed:** Replaced Control Rod Drive (CRD) assembly at Core Location 42-27*. The replacement work was performed in accordance with plant procedure PPM No 10.5.7 "Control Rod Drive Removal And Replacement" as follows:

1) Removed all eight (8) existing VT-1* visually examined cap screws from the CRD assembly bolted flanged connection.
2) Removed existing CRD assembly, Serial No A9118*.
3) Installed replacement CRD assembly, Serial No A9330.
4) Reinstalled eight (8) VT-1* visually examined new replacement cap screws for the CRD assembly bolted flanged connection.
5) Torqued the cap screws for the CRD assembly bolted flanged connection to the required torque values.
6) Performed VT-2 visual examination during pressure test on CRD assembly bolted flanged connection to confirm pressure boundary integrity of the joint. No leakage was observed during pressure test.

NOTES -

1) The replacement CRD assembly, Serial No A9330 is certified to comply with ASME Section III, Code Class 1, 1974 Edition with Winter 1975 Addenda requirements.
2) * CRD assembly, Serial No A9118 at Core Location 42-27 was previously installed during R17 outage in accordance with WOT No 01090165 39 and was replaced with CRD assembly Serial No A9330 in accordance with WOT No listed above due to CRD Serial No A9118 being stuck at position 00. The new replacement cap screws, SA-540 Gr. B23, Class 4, Heat No 14813 and VT-1 visual examination Report No 2RPV-020 for the new replacement cap screws is documented under NIS-2 Owner's Report for WOT No 01090165 39.

WOT No 01098605 04

ENERGY NORTHWEST
People · Vision · Solutions

FORM NIS-2 OWNER'S REPORT FOR REPAIRS OR REPLACEMENTS (Back)

8 Tests Conducted: Hydrostatic [ ] *Pneumatic* [ ] *Nominal Operating Pressure* [ ] *Other* [•]

Test Pressure: 1020 Psig *Test Temperature:* 170° F

Component Design Pressure: 1250 Psig *Temperature:* 575° F

9. Remarks: 1) See attached N-2 Code Data Report for the replacement CRD assembly, Serial No A9330.
2) * Pressure test on the CRD bolted flanged connection - Test pressure of 1020 Psig and test temperature of 170° F recorded during ASME Section XI pressure test in accordance with PPM No OSP-RPV-R801 "Reactor Pressure Vessel Leakage Test".

CERTIFICATE OF COMPLIANCE

We certify that the statements made in this Owner's Report are correct and this replacement *conforms to the rules of the ASME Code, Section XI.*
Type Code Symbol Stamp: Not Applicable
Certificate Of Authorization No.: Not Applicable
Expiration Date: Not Applicable

Prepared By Kuldip Singh *Signed By* Kuldip Singh
Kuldip Singh - Program Lead Engineer (PLE) Kuldip Singh - Program Lead Engineer (PLE)

Date 7/1/05 *Date* 7/1/05

CERTIFICATE OF INSERVICE INSPECTION

I, the undersigned, holding a valid commission issued by the National Board of Boiler and Pressure Vessel Inspectors and the State of Washington *and employed by* Hartford Steam Boiler Of Connecticut of Hartford, Connecticut *have inspected the components described in this Owner's Report during the period* 5-27-2005 *to* 7-11-2005 *and state to the best of my knowledge and belief, the Owner has performed examinations and taken corrective measures described in this Owner's Report in accordance with the requirements of the ASME Code, Section XI.*
By signing this certificate neither the Inspector nor his employer makes any warranty, expressed or implied, concerning the examinations and corrective measures described in this Owner's Report. Furthermore, neither the Inspector nor his employer shall be liable in any manner for any personal injury or property damage or a loss of any kind arising from or connected with this inspection.

Inspector's Signature *Commissions* 10655W A, B, N, I
National Board, State, and Endorsements

Date 7-11-2005

W07 No. D10986 05 04

FORM N-2 NPT CERTIFICATE HOLDERS' DATA REPORT FOR NUCLEAR PART AND APPURTENANCES*

As required by the Provision of the ASME Code Rules, Section III, Div. 1

1. Manufactured & Certified by : General Electric Company Nuclear Fuel & Components Manufacturing (GE NF & CM)

   2117 Castle Hayne Road, Wilmington, North Carolina 28401
   (Name and Address of NPT Certificate Holder)

   (b) Manufactured for : WNP 2 Richland, Washington 99352
   (Name and Address of N Certificate Holder for completed nuclear component)

2. Identification - Certificate Holder's S/N of Part : A9330 Nat'l Bd. No. N/A

   (a) Constructed According to Drawing No: 919D258G003 Rev 18 Dwg. Prepared by D. L. Peterson

   (b) Description of Part Inspected: Cylinder Tube & Flange

   (c) Applicable ASME Code: Section III , Edition 1974 , Addenda Date W'75 , Case No. 1361-2 Class 1

3. REMARKS: Standard part for use with Reactor. Hydrostatically tested at 1825 psi. min.
   (Brief description of service for which component was designed)

Sheet 1 of 2

We certify that the statements in this report are correct and this vessel part or appurtenance as defined in the code conforms to the rules of construction of the ASME Code Section III. (The applicable Designed Specification and Stress Report are not the responsibility of the NPT Certificate Holder for parts. An NPT Certification Holder for appurtenances is responsible for furnishing a separate Design Specification and Stress Report if the appurtenance is not included in the component Design Specification and Stress Report).

Date: 06/27/95 Signed GE - NEBG - NF & CM - QA (NPT Certificate Holder) By (SC QA Representive)

Certificate of Authorization Expires: 6/16/96 Certification of Authorization No. : NPT N - 1151

Certification of Design for Appurtenance

Design information on file at GE Company, San Jose, California

Stress analysis report on file at GE Company, San Jose, California

DC22A6253 Rev. 1
Design specification certified by Bjorn Haaberg Prof. Eng. State Calif. Reg. No. 15570

DC22A6254 Rev 1
Stress analysis report certified by Edward Yoshio Prof. Eng. State Calif. Reg. No. M018646

Certification of Shop Inspection

I, the undersigned, holding a valid commission by the National Board of Boiler and Pressure Inspectors and/or the State or Province of North Carolina and employed by Department of Labor of State of North Carolina have inspected the part of a pressure vessel described in this Partial Data Report on 6/27, 1995, and state that to the best of my knowledge and belief, the NPT Certificate Holder has constructed this part in accordance with the ASME Code Section III.
By signing this certificate, neither the Inspector nor his employer makes any warranty, expressed or implied, concerning the part described in the Partial Data Report. Furthermore, neither the Inspector nor his employer shall be liable in any manner for any personal injury or property damages or a loss of any kind arising from or connected with this inspection.

6/27, 1995 — Date
Jerome P Ewere — Inspector's Signature
NC 1231, Ohio, WC 3686 PA — National Board, State, Province And No.

*Supplemental sheets in form of lists, sketches or drawing may be used provided (1) size is 8-1/2" x 11", (2) information in 1-2 on this Data Report is included on each sheet, and (3) each sheet is numbered and number of sheets is recorded in Item 3. "REMARKS".

(07/90)

FORM N-2 (back)

Items 4-8 Incl. to be completed for single wall vessels, jackets vessels, or shells of heat exchangers.

4. Shell: Material ____ T.S. ____ Nominal Thickness ____ in. Corrosion Allowance ____ in. Dia. ____ ft. ____ in. Length ____ ft. ____ in.
(Kind & Spec. No.) (Min. of Range Specified)

5. Seams: Long ____ H.T.[1] ____ R.T. ____ Efficiency ____ %
Girth ____ H.T.[1] ____ R.T. ____ No. of Courses ____

6. Heads: (a) Material ____ T.S. ____ (b) Material ____ T.S. ____

	Location (Top Bottom, Ends)	Thickness	Crown Radius	Knuckle Radius	Elliptical Ratio	Concial Apex Angle	Hemispherical Radius	Flat Diameter	Side to Press. (conv. or conc.)
(a)									
(b)									

If removable, bolts used ____ (Material, Spec. No., T.S. Size Number) Other fastening ____ (Describe or attach sketch)

7. Jacket Closure: ____
(Describe as ogee and weld, bar, etc. If bar give dimensions, if bolts, describe or sketch)
Drop Weight ____
Charpy Impact ____ ft-lb

8. Design pressure[2] 1250 psi at 575 °F at temp of ____ °F

Items 9 and 10 to be completed for tube sections

9. Tube Sheets: Stationary. Material ____ (Kind & Spec. No.) Dia. ____ (Subject to pressure) Thickness ____ in. Attachment ____ (Welded, Bolted)
Floating. Material ____ Dia. ____ Thickness ____ in. Attachment ____

10. Tubes: Material ____ O.D. ____ in. Thickness ____ inches or gage. Number ____ Type ____ (Str. or U)

Items 11 - 14 incl. to be completed for inner chambers of jacketed vessels, or channels of heat exchangers.

11. Shell: Material ____ T.S. ____ Nominal Thickness ____ in. Corrosion Allowance ____ in. Dia. ____ ft. ____ in. Length ____ ft. ____ in.
(Kind & Spec. No.) (Min. of Range Specified)

12. Seams: Long ____ H.T.[1] ____ R.T. ____ Efficiency ____ %
Girth ____ H.T.[1] ____ R.T. ____ No. of Courses ____

13. Heads: (a) Material ____ T.S. ____ (b) Material ____ T.S. ____

	Location	Thickness	Crown Radius	Knuckle Radius	Elliptical Ratio	Concial Apex Angle	Hemispherical Radius	Flat Diameter	Side to Press. (conv. or conc.)
(a)	Top, bottom, ends								
(b)	Channel								

If removable, bolts used (a)____ (b)____ (c)____ Other fastening ____ (Describe or attach sketch)
Drop Weight ____
Charpy Impact ____ ft-lb

14. Design pressure[2] ____ psi at ____ °F at temp of ____ °F

Items below to be completed for all vessels where applicable.

15. Safety Valve Outlets: Number ____ Size ____ Location ____

16. Nozzles:

Purpose (Inlet, Outlet, Drain)	Number	Dia. or Size	Type	Material	Thickness	Reinforcement Material	How Attached

17. Inspection Openings: Manholes, No. ____ Size ____ Location ____
Handholes, No. ____ Size ____ Location ____
Threaded, No. ____ Size ____ Location ____

18. Supports: Skirt ____ (Yes or No) Lugs ____ (Number) Legs ____ (Number) Other ____ (Describe) Attached ____ (Where & How)

1 - If Postweld Heat-Treated.
2 - List other internal or external pressure with coincident temperature when applicable.

WOT No. 01095605 04

FORM N-2 NPT CERTIFICATE HOLDERS' DATA REPORT FOR NUCLEAR PART AND APPURTENANCES*

As required by the Provision of the ASME Code Rules, Section III, Div. I

7/1/05.

1. Manufactured & Certified by : General Electric Company Nuclear Fuel & Components Manufacturing (GE NF & CM)

   2117 Castle Hayne Road, Wilmington, North Carolina 28401

   (Name and Address of NPT Certificate Holder)

   (b) Manufactured for : WNP 2 Richland, Washington 99352

   (Name and Address of N Certificate Holder for completed nuclear component)

2. Identification - Certificate Holder's S/N of Part : A9330 Nat'l Bd. No. N/A

   (a) Constructed According to Drawing No: 919D258G003 Rev 18 Dwg. Prepared by D. L. Peterson

   (b) Description of Part Inspected: Cylinder Tube & Flange

   (c) Applicable ASME Code: Section III , Edition 1974 , Addenda Date W'75 , Case No. 1361-2 Class 1

3. REMARKS: Standard part for use with Reactor. Hydrostatically tested at 1825 psi. min.

   (Brief description of service for which component was designed)

1. Cap 166B9274P001
   SA182 - F316
   3/8" thick x 1 1/16" OD

2. Indicator Tube 167B4908P001
   SA312 - TP316
   3/4" sch 40 - seamless pipe
   0.113" wall thickness
   1.065" max. dia.

3. Plug 159A1176P001
   SA182 - F304
   1/4" thick x 0.812" OD

4. Flange 919D610P001 (719E474)
   SA182 - F304
   3.37" thick x 9 5/8" OD

5. Head 129B3539P005
   SA182 - F304
   7/8" thick x 2.875" dia.

6. Ring Flange 114B5122P002
   SA182 - F304
   1" thick x 5.0" OD x 1.75" ID

7. Cap Screw 117C4516P002
   SA193 - B6
   6 ea. 1/2" dia. on 4 1/8" bolt circle

8. Plug 175A7961P001
   SA182 - F304
   0.38" thick x 1.307" dia.
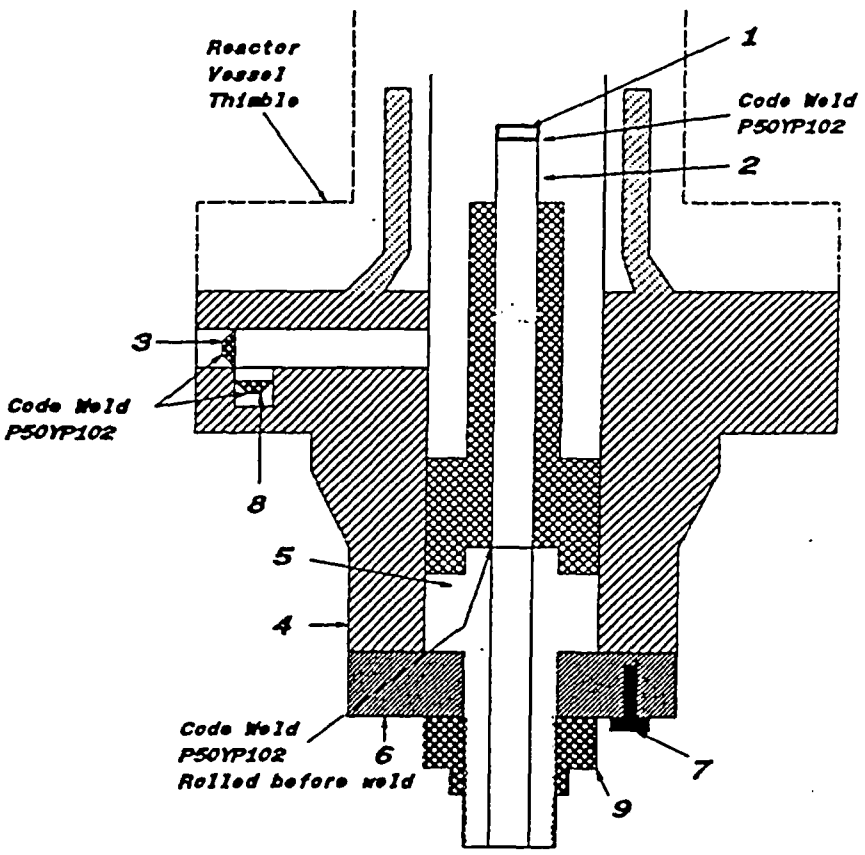
9. Nut 114B5460P001
   XM - 19 SA479
   1.30" thick x 2.62" dia.