FLORIDA POWER & LIGHT CO.

NUCLEAR ENGINEERING

TURKEY POINT UNITS 3 & 4

ENGINEERING EVALUATION

FOR

PROPOSED LICENSE AMMENDMENT SUPPORT

EVALUATION OF DESIGN INPUTS UTILIZED

FOR WESTINGHOUSE LICENSING REPORT

WNA-LI-00026, SECTION 4.2

PTN-ENG-SEIJ-04-073

REVISION 0

QUALITY RELATED

REVIEW AND APPROVAL RECORD

PLANT PTN UNIT 3 & 4

TITLE EVALUATION OF DESIGN INPUTS UTILIZED FOR WESTINGHOUSE LICENSING REPORT WNA-LI-00026 SECTION 4.2

LEAD DISCIPLINE I&C

ENGINEERING ORGANIZATION LIFE CYCLE MANAGEMENT

REVIEW/APPROVAL:

GROUP	INTERFACE TYPE			PREPARED	VERIFIED	APPROVED	FPL APPROVED*
	INPUT	REVIEW	N/A				
MECH			X				
ELECT			X				
I&C		X		[illegible]	[illegible]	[illegible]	[illegible] 12/7/04
CIVIL			X				
DSN BASIS**			X				
CSI			X				
NUC FUEL			X				

* For Contractor Evals As Determined By Projects ** Review Interface As A Min On All 10CFR50.59 Evals and PLAs

FPL PROJECTS APPROVAL: [illegible] FOR DAN TOMASEVICH DATE: 12/17/04

OTHER INTERFACES

Form 24, Rev 2 (7/97)

I. PURPOSE

The purpose of this Engineering Evaluation is to review Design Inputs provided by FP&L in Attachment 1 (Section 4.2 Platform Considerations, portion in bold italics type).

These Design Inputs will be used in support of Reference 1, Westinghouse report WNA-LI-00026 Licensing Support for Deletion of Steam Flow / Feedwater Flow Mismatch Reactor Trip.

This Engineering Evaluation also verifies that the Design Inputs provided comply with the Software Requirements Specification (SPEC-IC-033 Rev. 0) and the Hardware Requirements Specification (SPEC-IC-010 Rev. 3), which are included as References 2 and 3.

II. LICENSING REQUIREMENTS

None.

III. EVALUATION

1. Referenced design documents and disposition:

   FP&L provided Design Input to the "Platform Considerations" Section 4.2 of Reference 1. The Design Input is depicted in ***bold italics*** within the attached Section 4.2. These inputs to Section 4.2 of Reference 1 were verified to comply with Reference 2 (SPEC-IC-033 Revision 0) and Reference 3 (SPEC-IC-010 Revision 3) and provide the basis for this evaluation. References 2 and 3 have been reviewed and approved by FP&L in accordance with approved procedures.

2. This Engineering Evaluation was performed using the Platform Considerations identified in the attached Section 4.2 and appropriate sections of approved FP&L Design Specifications, References 2 and 3.

   The Attachment 1 Design Inputs are further defined in sub-sections 4.2.1, Median Signal Selection Platform Quality and Reliability; 4.2.2, Median Signal Selection Platform Failure Considerations; and 4.2.3, Median Signal Selection Platform Detection, Indication, and Test.

   The Design Input provided in Attachment 1 will be used by Westinghouse for incorporation into their Licensing Support Document, Reference 1.

IV. CONCLUSION

This analysis verifies that the Design Input provided in Attachment 1 complies with the applicable requirements of Software Specification SPEC-IC-033, Revision 0 and Hardware Specification SPEC-IC-010, Revision 3 (References 2 and 3 inclusive).

V. VERIFICATION SUMMARY

This verification assesses the Engineering Evaluation of FP&L design Input to Westinghouse Licensing Report WNA-LI-00026, Section 4.2. The scope of the verification is to ensure that the evaluation is technically reasonable and its preparation complies with ENG-QI-2.0, "Engineering Evaluations" and ENG-QI-1.7, "Design Input Verification".

The Design Review method was used for this verification, utilizing References 1 through 3 as inputs.

The design verification concludes that this evaluation is reasonable when compared to the inputs.

VI. REFERENCES

1. WNA-LI-00026, Licensing Support for Deletion of Steam/ Feedwater Flow Mismatch Reactor Trip, Revision B.

2. SPEC-IC-033, Feedwater Control System (FWCS) Software Requirements Specification, Revision 0 (Specifically Section 3.8.7.2: Input Signal Validation.).

3. SPEC-IC-010, Specification for Distributed Control System, Revision 3 (Specifically Sections 2.0 and 4.0 for General and Functional Requirements for DCS.).

VII. AFFECTED DOCUMENTS

None.

VIII. ATTACHMENTS

1. Section 4.2, Platform Considerations. (5 pages)

MEDIAN SIGNAL SELECTION FUNCTION CONSIDERATIONS

4.0 OVERVIEW

To support the elimination of the adverse control / protection interaction between the main feedwater control system and the low-low SG water level reactor trip, various aspects of the MSS function are addressed by this report. These aspects which are covered in the sections that follow include:

Application Considerations:

1. A demonstration of the functional adequacy of the MSS in preventing the adverse control and protection system interaction mechanism. This discussion also includes the functional response of the MSS function to a given failure mechanism and configuration certification.

Platform Considerations:

1. A discussion of quality and reliability showing that the function is implemented to support a low failure probability including the use of components with low failure rates. The discussion addresses the design and implementation process and operating experience.

2. A discussion regarding potential failure modes that may impact the MSS function including power supply failure, component failure, and communication device failure.

3. Requirements regarding function reliability such as MSS failure detection, indication, and test capabilities.

4. A discussion of the Median Signal Selector function's ability to withstand faults originating in the control system that could also affect a protection channel.

4.1 APPLICATION CONSIDERATIONS

4.1.1 Median Signal Selection Functional Design & Certification

4.1.1.1 Operational Description

The MSS receives three isolated narrow range level input signals designated as A, B, and C for each steam generator. The algorithms are configured to select the high value between A and B, B and C, and C and A which are then designated as D, E, and F. Next, the low value between D and E is

selected and designated as G. Finally, the low value between G and F is selected. This output value is the median of the three input signals. For example, suppose that A, B, and C are signals representing 30%, 40%, and 50% of steam generator level. After the [high values are selected,

signals D, E, and F are equal to 40%, 50%, and 50% respectively. Selection of the low value between D and E yields a signal of 40% for G. Finally, the low value between G and F is equal to 40% steam generator level]. This signal representing 40% level is now forwarded to the algorithms for feedwater control. Thus, the MSS will always select the median of three input signals, [and a failure (high or low) of any single input signal will be rejected by the MSS thereby preventing the failure from causing a control system disturbance, and initiating a transient which may require protective action.

4.1.1.2 Functional Fault Tolerance and Alarming

4.1.1.3 Configuration Certification

In order to enhance the reliability of the MSS, a formal activity known as Configuration Certification is undertaken to minimize design errors and provide overall assurance that the specified functional requirements are implemented in the hardware and software as a system.

Configuration Certification is accomplished via:

4.2 PLATFORM CONSIDERATIONS

4.2.1 Median Signal Selection Quality and Reliability

Since the median signal selector function is integral to the basis for steam flow/feedwater flow trip elimination, continued ability of the function to serve in this role is contingent on its ability to select the median signal. Therefore, steps have been taken to ensure the reliability of the signal selection function. Further, the design provides the capability for complete unit testing that provides unambiguous determination of credible system failures.

For the purpose of increased availability, each system includes several levels of redundancy and fault tolerant features. ***Power supplies are redundant, powering both the Control Processors and I/O Modules. The bus between the Control Processor and the I/O Modules is redundant. The Control Processors are used in Fault-Tolerant pairs, which seamlessly and bumplessly transfer control to one of the pair, should the other of the pair fail. Redundant I/O modules are used to provide redundant output capability to the final control elements.***

4.2.2 Median Signal Selection Failure Considerations

4.2.2.1 Consequences of Failures

The consequences of a failure are minimized by utilizing redundancy in key areas and by predetermining the desired state of device outputs and control actions for credible failures. Specific actions have been taken to minimize the consequences of a failure as follows:

1. ***Each steam generator level controller with its associated I/O modules and power supplies is physically and functionally independent from the others.***

2. ***Redundancy is inherent in the system with fault tolerant control processor pairs and redundant field communications to I/O Modules. Failures of any of these redundant components are identified by the system monitor and are alarmed.***

3. ***When multiple measurements of the same plant parameter are available, they are input to the system on individual I/O Modules with software algorithms combining the signals. Failure of an input channel on one I/O Module is accommodated by replacement of the faulted module with no effect on the algorithm's output.***

These design features provide further assurance that a component failure will not cause a control system upset. Credible failures of components will not defeat the control and protection system independence provided by the MSS function.

4.2.2.2 Duration of Failures

The duration of a failure is minimized by the ability to diagnose and repair the system easily and quickly. For example,

a. ***In the event of a processor failure, the backup processor takes over control and becomes the primary controller, and an alarm is generated to the system monitor. This transfer of control is seamless and bumpless. The control function is unaffected. The transfer is accomplished automatically within two processing cycles, typically less than one second.***

b. ***The repair methodology is to replace the failed processor. This is as simple as removing the failed processor and replacing it with a spare. This processor automatically re-boots upon power-up, and becomes the backup processor after passing the boot-up diagnostics and re-marrying (synchronization with the primary controller) routines. This reestablishment of the fault-tolerant pair is seamless and bumpless. The control function is unaffected throughout the initial failure, replacement of the faulted module, and restoration of service.***

Time to repair faulted components is not a significant consideration in overall system performance because of the high reliability of the redundant components and FPL's normal maintenance practices.

The MSS to be installed at Turkey Point is designed to allow for easy detection of system failures through both self diagnostics and periodic test. These methods for failure detection are discussed below.

4.2.2.3 Diagnostics

Self-diagnostics are automatically executed during the normal operation of the system and do not disrupt the real time performance of the process.

a. ***The system monitor constantly monitors the health and communication among and between Processors and their respective I/O modules. A system alarm is generated should a module fail, a processor fail, any I/O bus fail, or a power supply fail.***

b. ***Deviations between redundant inputs are detected and alarmed. Redundant sensor algorithms are used to validate important inputs to the control system.***

4.2.2.4 Test Capability

The MSS has been provided with the capability for on-line testing. Signal selector testing consists of [monitoring] the three steam generator level input signals and [the one selected median signal via an engineering display interface. Comparison of the selected median signal to the input signals] will permit determination of whether or not the actual median signal is being chosen, and, consequently, whether the signal selector is functioning properly.

The MSS can be tested concurrently with the protection system instrument channels which provide its inputs. When the individual instrument channels are placed in the test mode, test signals are received from the protection system, in the same manner as a normal process signal. This configuration ensures that the entire signal path to the signal selector is tested. As the test signal magnitude is varied, that instrument channel which represents the median signal will also be altered allowing the technician to ensure that an improper signal is not passed through the MSS.

4.2.3 Independence of Safety-Related and Nonsafety-Related Inputs to the Median Signal Selection Function

The (existing) 7100 Hagan racks will provide isolated SG level signals to the MSS function. Qualified isolation devices are utilized to prevent a fault in the nonsafety-related feedwater control system from propagating to the safety-related reactor protection system.

Enclosure 4

FPL Letter ENG-LCM-04-251
PTN 3 Design Configuration Documents
For
Feedwater Control Sensor Segregation December 15, 2004

FPL

700 Universe Boulevard
Juno Beach, FL 33408

ENG-LCM-04-251

December 15, 2004

Mr. P.J. McDonough
Customer Projects Manager
Westinghouse Electric Company
Nuclear Services
P.O. Box 355
Pittsburgh, Pennsylvania 15230-0355
USA

Subject: PTN 3 Design Configuration Documents for Feedwater Control Sensor Segregation

Dear Mr. McDonough:

Attached are Main Steam Isometric Drawings depicting main steam sensing lines and associated flow transmitters post steam generator work per PC/M 94-129. These drawings, as well as the attached P&IDs confirm our position concerning separation between steam flow transmitter sensing lines and steam generator level sensing lines. The drawing numbers are: 5613-P-656-S (sh.1 and 2), 5613-P-657-S (sh.1 and 2), and 5613-P-658-S (sh.1 and 2) respectively for main steam lines/steam generators 'A', 'B' and 'C'. P&IDs include 5613-M-3072, Main Steam System and 5613-M-3074, Feedwater System. Additional verifications were made on the level transmitters utilizing PTN Engineering Walkdown package AFW-3-III-6 for '3C' Steam Generator, which was provided by PTN Feedwater System Engineer Kevin Peterson on 12-14-04. These documents provide the verifications requested by Vaughn Thomas of your office.

If you have any questions regarding this matter please feel free to contact Warren Busch at 561-691-2963, or Samuel C. Moore at 561-691-2652.

Sincerely,

Dan Tomaszewski FOR
LCM Project Manager

cc: Warren Busch
Steve Hetrick
Samuel Moore
Gary Wood
Paul Collette
Ralph Cholewinski

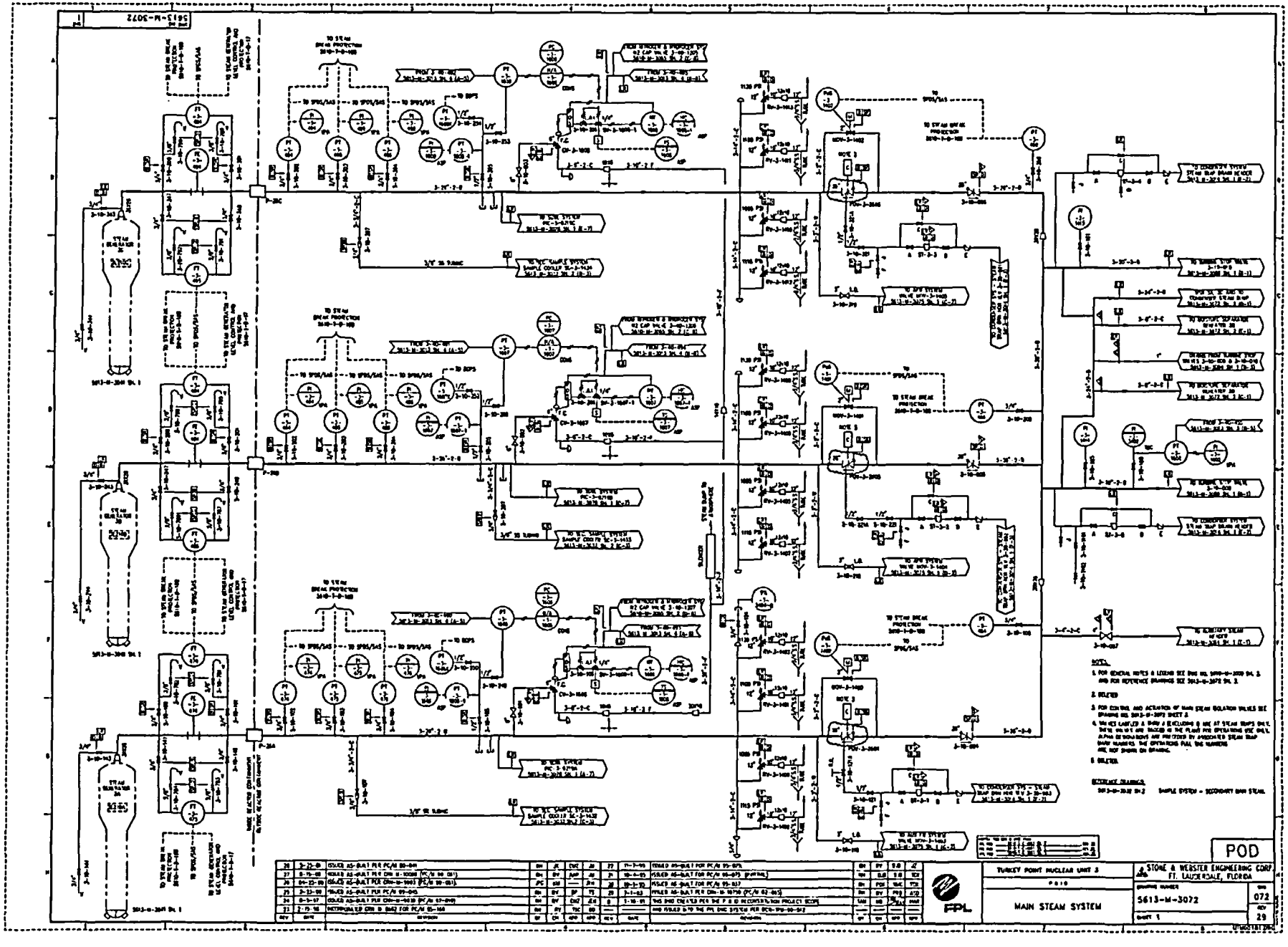
POD
TURKEY POINT NUCLEAR UNIT 3
MAIN STEAM SYSTEM
STONE & WEBSTER ENGINEERING CORP.
FT. LAUDERDALE, FLORIDA
5613-M-3072
072
29
FPL

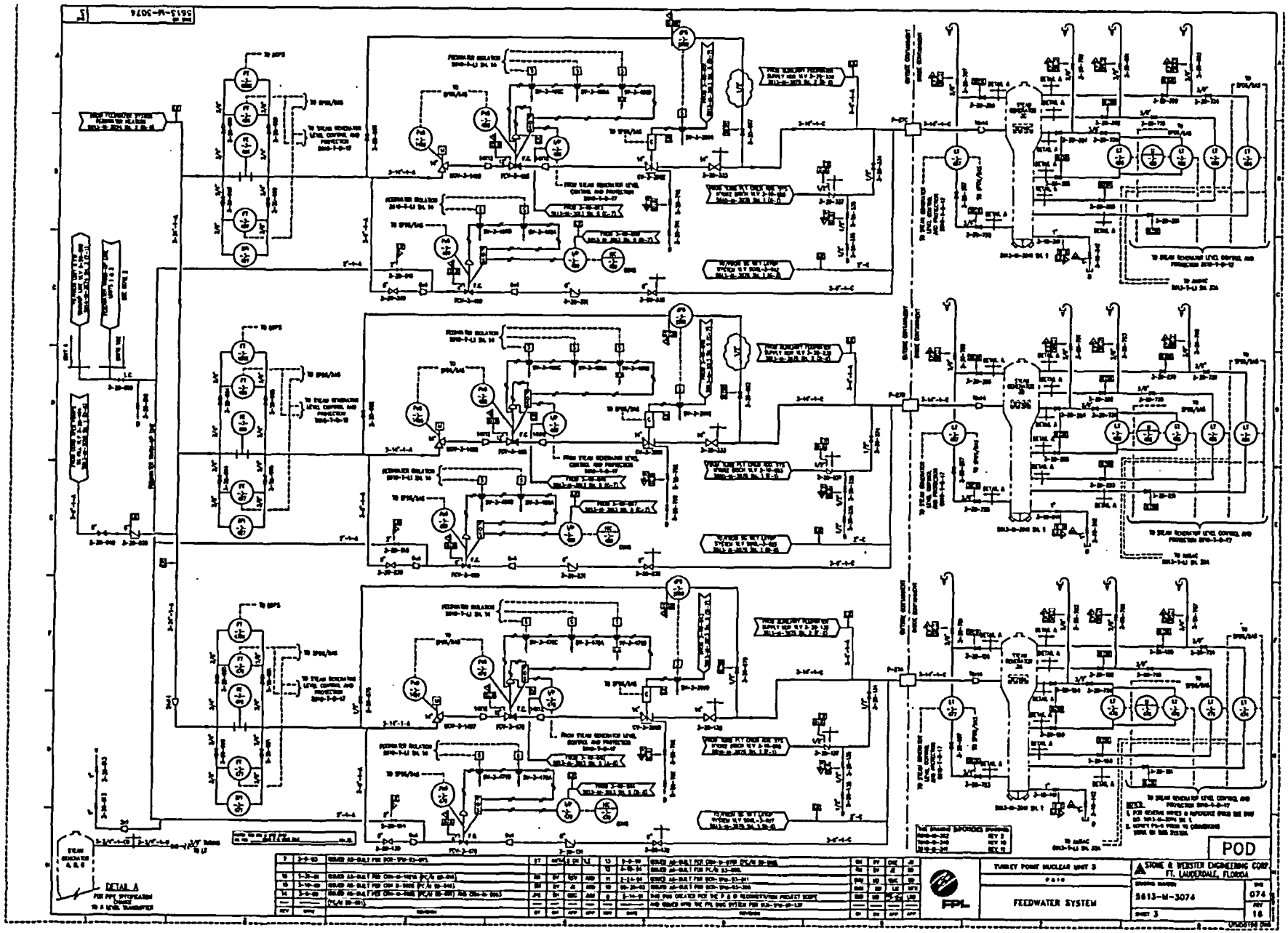
5613-M-3074
POD
DETAIL A
TURKEY POINT NUCLEAR UNIT 3
FEEDWATER SYSTEM
STONE & WEBSTER ENGINEERING CORP
FT. LAUDERDALE, FLORIDA
5613-M-3074
FPL

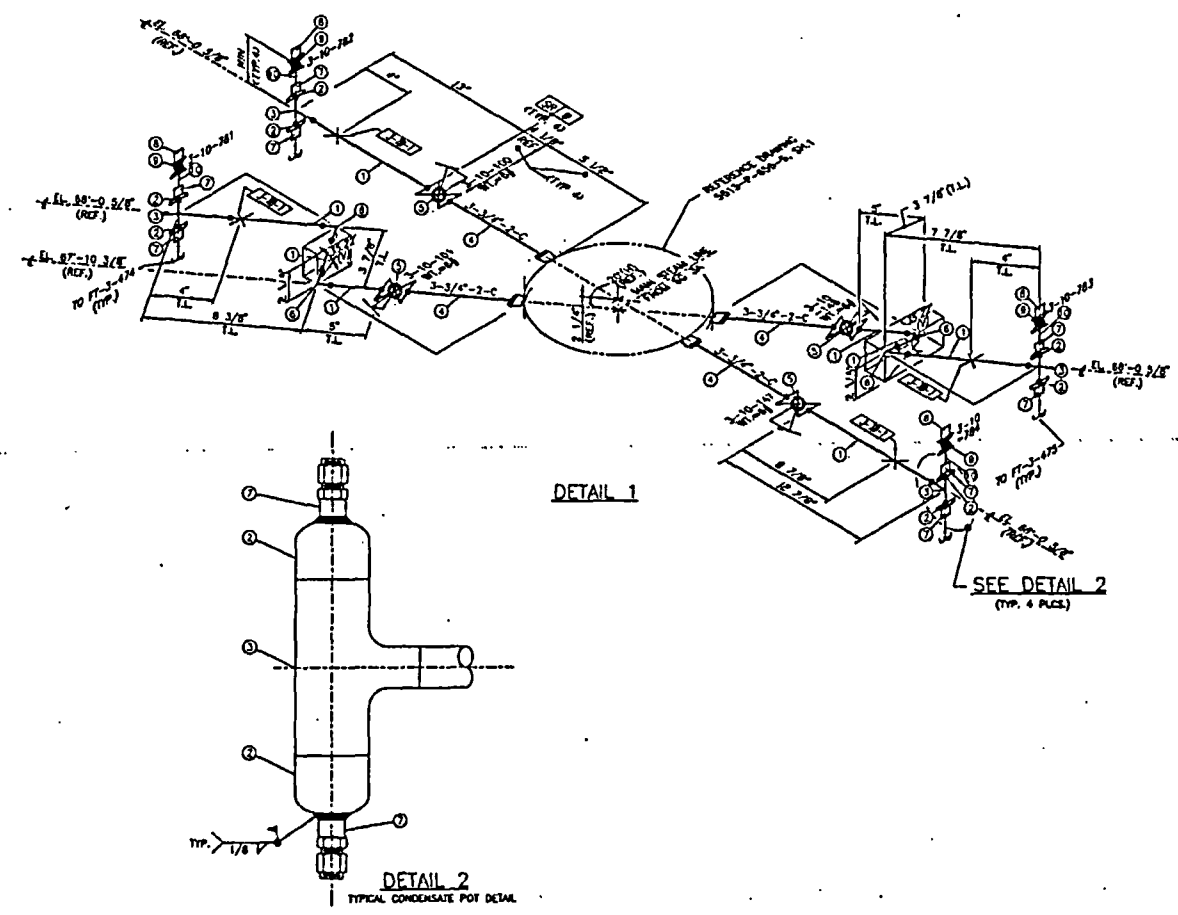

BILL OF MATERIALS

MARK	QTY	SIZE	MIN/MAX	COMPONENT DESCRIPTION	MFG.	MATERIAL
1	10 LF	3/4"	80	PIPE	CLASS C	NOTE 4
2	8	1 1/2"	XS	BUTTWELD CAP	CLASS C	NOTE 4
3	4	-	XS	1 1/2" X 3/4" BW RED. TEE	CLASS C	NOTE 4
4	4	3/4"	XS	NIPOLET 2 X 1/2" LG. (NOTE 4C)	CLASS C	C.S.
5	4	3/4"	6000	BUTTWELD GLOBE VALVE - KEROTEST	CLASS C	NOTE 4
6	4	3/4"	XS	BUTTWELD 90° ELBOWS	CLASS C	NOTE 4
7	8	3/8"	-	SWOLK TO MALE PIPE WELD CONN. SS-600-1-6W	SWAGELOK	NOTE 4
8	4	3/8"	-	PLUG	SWAGELOK	SS-600-P
9	4	3/8"	-	GLOBE VALVE SWAGELOK "N" SERIES	-	SS-SWAGE-G
10	3 LF	3/8"	.065"	TUBING	S.S.	NOTE 4

GENERAL NOTES

1. PIPING FOR THIS SYSTEM IS TO BE FIELD CHECKED FOR INTERFERENCES PRIOR TO FABRICATION AND INSTALLATION.
2. FOR PIPING AND INSTRUMENTATION DIAGRAM FOR THIS SYSTEM, SEE 5613-M-3072, SH. 1.
3. A PORTION OF THE PIPING TO BE INSTALLED BY THIS DRAWING IS "QUALITY GROUP B", SAFETY RELATED, WITH THE REMAINDER OF THE PIPING & TUBING BLING "QUALITY GROUP SR", SAFETY RELATED.
4. FOR MATERIAL AND INSTALLATION SPECIFICATIONS, REFERENCE SPEC. 5177-PS-11, 5177-PS-12, 5177-M-52, 5177-J-710, AND SPEC-C-021.
5. FOR PIPE SUPPORT DETAILS, SEE DRAWING SERIES 5613-H-656.

REFERENCE DRAWINGS

5610-M-134	MAIN STEAM PIPING - CONTAINMENT & TURBINE AREA
5610-M-152	CTMT. AREA PIPING - AREA 5 - PLAN BELOW EL. 85'-0"
5610-M-158	CTMT. AREA PIPING - AREA 6 - PLAN BELOW EL. 85'-0"
5610-M-401C-31 SH.2	ITT - FLOW TUBE FABRICATED - INSERT TYPE
5613-P-656-S SH.1	MAIN STEAM SYSTEM ISOMETRIC - STRESS PROBLEM MS-3

REV	DATE	REVISION	BY	CH	APP	APP
0	11-21-95	ISSUED AS-BUILT PER PC/M 94-129, INCORP. CRN M-6371 AND ISSUED INTO THE FPL SYSTEM.	LSM	[illegible]	-	[illegible]

FPL

TURKEY POINT NUCLEAR UNIT 3

PIPING ISOMETRIC

MAIN STEAM SYSTEM
FT-3-474 & FT-3-475 PIPING
STRESS PROBLEM MS-3

FLORIDA POWER & LIGHT

DRAWING NUMBER 5613-P-656-S

SHEET 2

SYS 072

REV 0

5613-P-656-S SH.2 REV-0

5613-P-656-S

5613-P-656-S, SH-1, REV-4

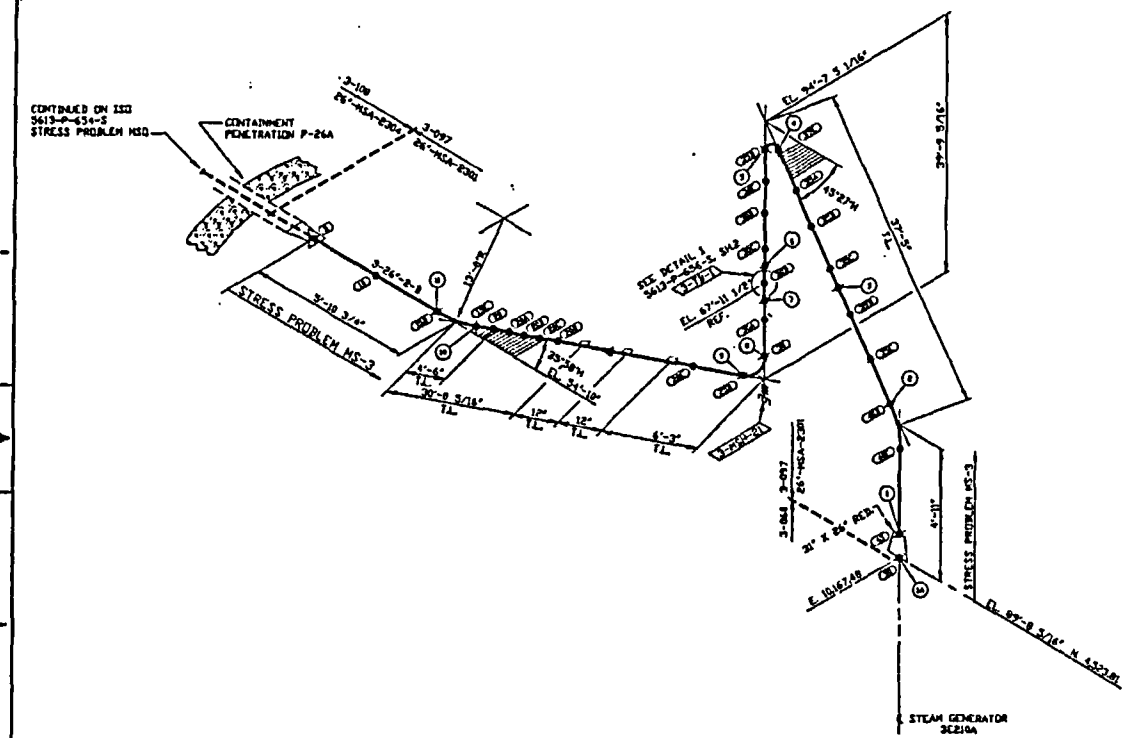

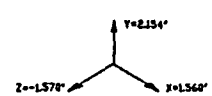

THERMAL DISPLACEMENTS AT RP CED
STEAM GENERATOR 3E210A

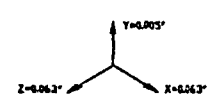

SEISMIC DISPLACEMENTS AT RP CED
STEAM GENERATOR 3E210A

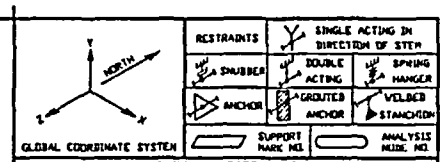

REFERENCE P&ID NO. 5613-M-3072 SH. 1
REFERENCE OPERATING DIAGRAM NO. 5613-M-3072 SH. 1
PIPING FROM STEAM GENERATOR 3E210A TO CONTAINMENT PENETRATION P-26A

THIS DRAWING MADE FROM 79-14 WALKDOWN INDEX FOR STRESS PROBLEM MS-3
REFERENCE DOCUMENTS: 5177-102-SK-P-510 R/B

SEISMICALLY ANALYZED PIPING

REGION	HYDRO PRESS PSIG	DESIGN TEMP °F	DESIGN PRESS. PSIG	MAX OPERATING TEMP °F	MAX OPERATING PRESS. PSIG
ALL	1326	600	1085	574	1005

SYSTEM TEMPERATURE AND PRESSURE OPERATING MODES

MODE	TEMPERATURE °F	PRESSURE PSIG
NORMAL	574	951
EMERGENCY		

(XX) ISI WELD NUMBER | VHP RESTRAINT | W WELD SYMBOL

PIPE MATERIAL	LINE SPEC	LINE SIZE	INSULATION
A335	3-26"-E-3	NOTE 3	3 1/2"
A106 GR.B	3-3/4"-E-C	3/4"-3(CR4B)	NONE

NOTES:
1) ALL ELBOWS ASSUMED LONG RADIUS UNLESS OTHERWISE SPECIFIED
2) FOR PIPE SUPPORT DETAILS SEE DRAWING SERIES 5613-M-656
3) PIPING IS 26" O.D. WITH .437" MIN. WALL. BENDS ARE .896" MIN. WALL
4) SUPPORT STIFFNESSES MAY APPLY. CHECK ANALYSIS OF RECORD FOR STIFFNESSES.
5) SEE CALCULATION 9H08-074-02 FOR EQUIPMENT MOTIONS, VALVE WEIGHTS, ETC.
6) NODE CED IS AN ANALYTICAL ANCHOR.
7) ALL ISI INFORMATION, WELD NUMBERS & LOCATIONS, ZONES, LINE NUMBERS & VHP RESTRAINT LOCATIONS ARE FOR ISI REFERENCE ONLY.

ZONE NUMBER	LINE NUMBER
3-897	26"-MSA-2301

NO	DATE	REVISION	BY	CH	COR	APP
4	10/96	ISSUED AS-BUILT FOR PCN 90-149 AND REVISED TITLE BLOCK AS SHOWN				
3	11/90	ISSUED AS-BUILT FOR PCN 90-149				
2	4/90	REVISED PER DCR-TPM-90-496, ADDED ISI WELD NUMBERS, ZONE NUMBERS AND WELD SYMBOLS. + REVISION CLOUD SHOWN				
1	3/90	AS-BUILT PER DCR-TPM-90-649				
0	10/89	THIS DWG HAS BEEN MADE VISIBLE BUT REMAINS DWG 5 5177-102-SK-P-510				
		REV 0 AS-BUILT PER DWG/TELEDYNE ISI REDRAW				

DATE | SCALE | DR MEN | CR NO | CH JRS | COR RAK | APPROVED FJE / GLF

FPL

TURKEY POINT NUCLEAR POWER PLANT
UNIT 3
MAIN STEAM SYSTEM
SYSTEM NO. 72 INSIDE CONTAINMENT
STRESS PROBLEM MS-3

TELEDYNE ENGINEERING SERVICES

SHEET 1 | REV NO 4

5613-P-656-S

FILE: UTP60175.DWG

5613-P-657-S

5613-P-657-S SH-1 REV-4

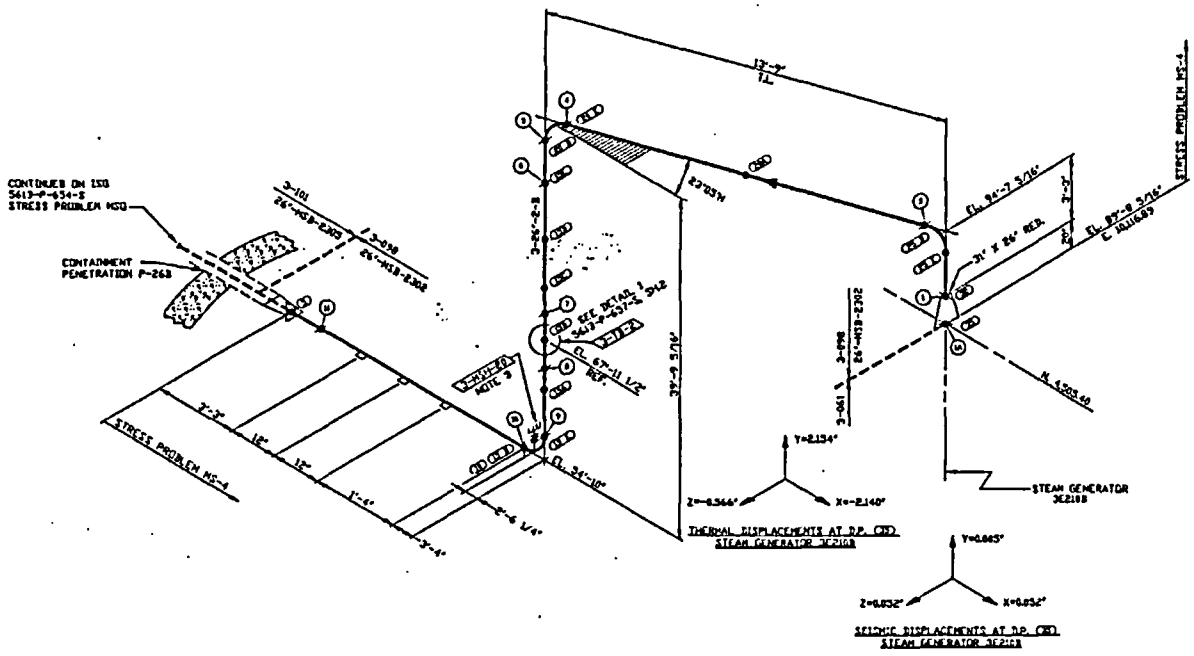

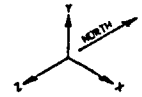

RESTRAINTS	SINGLE ACTING IN DIRECTION OF STEM
SNUBBER	DOUBLE ACTING / SPRING HANGER
ANCHOR	GROUTED ANCHOR / WELDED STANCHION
SUPPORT MARK NO.	ANALYSIS NODE NO.

REFERENCE P&ID NO. 5613-M-3072 SH. 1
REFERENCE OPERATING DIAGRAM NO. 5613-M-3072 SH. 1
PIPING FROM STEAM GENERATOR 3E210B TO CONTAINMENT PENETRATION P-26B

THIS DRAWING MADE FROM 79-14 WALKDOWN INDEX FOR STRESS PROBLEM MS-4
REFERENCE DOCUMENTS: 5177-102-SK-P-503 REV. B

SEISMICALLY ANALYZED PIPING

REGION	HYDRO PRESS PSIG	DESIGN TEMP °F	DESIGN PRESS. PSIG	MAX OPERATING TEMP °F	MAX OPERATING PRESS. PSIG
ALL	1356	650	1085	547	1005

SYSTEM TEMPERATURE AND PRESSURE OPERATING MODES

MODE	TEMPERATURE °F	PRESSURE PSIG
NORMAL	547	831
EMERGENCY	547	

(XX) ISI WELD NUMBER — VHGP RESTRAINT — WELD SYMBOL

PIPE MATERIAL	LINE SPEC	LINE SIZE	INSULATION
A155 KC-70 CL1	3-26"-B-B	NOTE 4	3 1/2"
A106 GRB	3-3/4"-E-C	3/4" SCH 80	NONE

NOTES:
1) ALL ELBOWS ASSUMED LONG RADIUS UNLESS OTHERWISE SPECIFIED
2) FOR PIPE SUPPORT DETAILS SEE DRAWING SERIES 5613-M-657
3) PIPE SUPPORT MK # 3-MSH-29 IS LOCATED AT D.P. 18 AND D.P. 15 B IN THE PIPE STRESS ANALYSIS. THESE POINTS ARE COINCIDENT. ACTUAL LOCATION IS AS SHOWN.
4) PIPING IS 26" O.D. WITH .937" NOM. WALL
5) NODE CED IS AN ANALYTICAL ANCHOR.
6) SUPPORT STIFFNESSES MAY APPLY. CHECK ANALYSIS OF RECORD FOR STIFFNESSES.
7) SEE CALCULATION 8HQB-074-02 FOR EQUIPMENT MOTIONS, VALVE WEIGHTS, ETC.
8) ALL ISI INFORMATION, WELD NUMBERS & LOCATIONS, ZONES, LINE NUMBERS & VHGP RESTRAINT LOCATIONS ARE FOR ISI REFERENCE ONLY.

ZONE NUMBER	LINE NUMBER
3-090	26"-MSB-2302

NO	DATE	REVISION	BY	CH	COR	APP
3	12/06/94	TITLES AS-BUILT PER PCM 94-119 AND REVISED TITLE BLOCK AS SHOWN	VJ	TMB	-	-
2	12/03/94	TITLES AS-BUILT PER PCM 94-129	LBH	MTH	S.M	TBG
1	10/94	REVISED PER BCR-TPN-94-499, ADDED ISI WELD NUMBERS, ZONE NUMBERS AND WELD SYMBOLS + REVISION CLOUD SHOWN	JP	CMB	AS	EAS
0	10/94	AS-BUILT PER BCR-TPN-94-549	CM	AS	RMS	MW/ALF

NO	DATE	REVISION	BY	CH	CJM	APP
2	4/28/93	REVISED PER BCR-TPN-93-499, ADDED ISI WELD NUMBERS, ZONE NUMBERS AND WELD SYMBOLS + REVISION CLOUD SHOWN	ALF	MTH	AJ	FBG
1	10/92	AS-BUILT PER BCR-TPN-92-549	JP	CMB	AS	EAS
0	10/92	THIS DWG WAS DERIVED FROM SUPERSEDED DWG # 5177-102-SK-P-503 REV. B AS-BUILT PER BLP 88/TELEDYNE ISI REDWG	CM	AS	RMS	MW/ALF

DATE | SCALE
FPL — FLORIDA POWER & LIGHT COMPANY
DR MCH | ER NO
CH JRB | COR RMS
APPROVED FBG / ALF

TURKEY POINT NUCLEAR POWER PLANT
UNIT 3
MAIN STEAM SYSTEM
SYSTEM NO. 72 INSIDE CONTAINMENT
STRESS PROBLEM MS-4

TELEDYNE ENGINEERING SERVICES
SHEET 1 | REV NO 4
5613-P-657-S

FILE: UTP00176.DWG

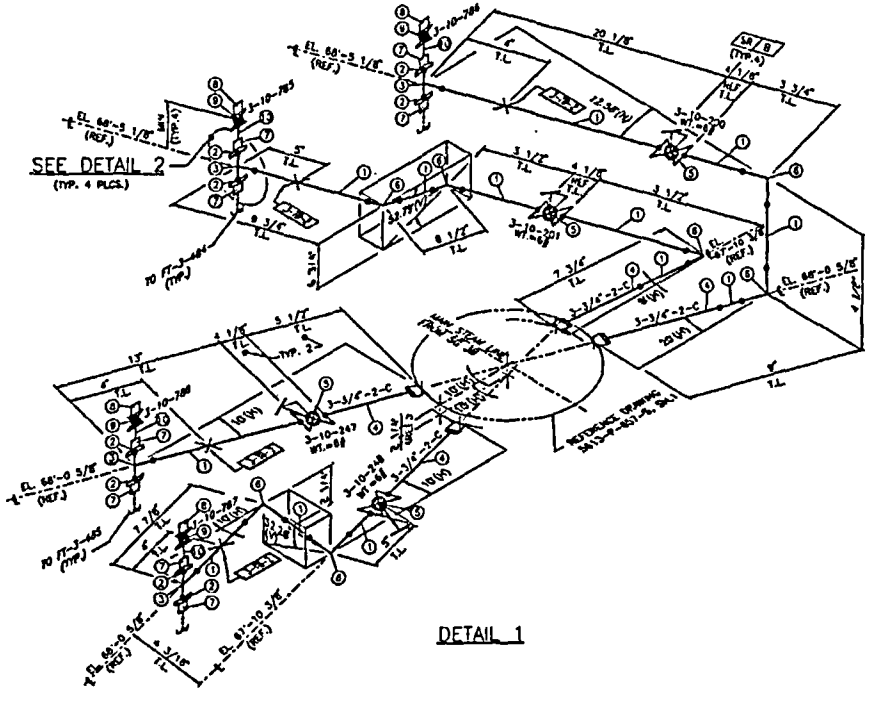

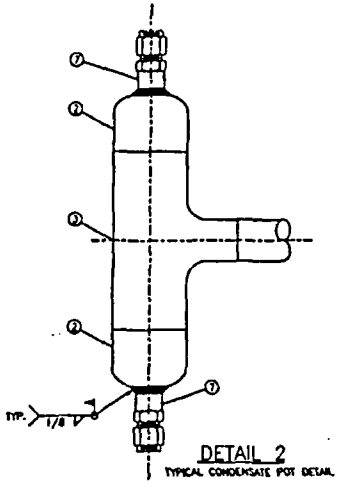

DETAIL 2
TYPICAL CONDENSATE POT DETAIL

BILL OF MATERIALS

MARK	QTY	SIZE	SCH/MAT	COMPONENT DESCRIPTION	MFG	MATERIAL
1	10 LF	3/4"	80	PIPE	CLASS C	NOTE 4
2	8	1 1/2"	XS	BUTTWELD CAP	CLASS C	NOTE 4
3	4	-	XS	1 1/2" X 3/4" SW RED TEE	CLASS C	NOTE 4
4	4	3/4"	XS	NIPOLET X 3 1/2" LG. (NOTE 4C)	CLASS C	C.S.
5	4	3/4"	800#	BUTTWELD GLOBE VALVE - KEWOTEST	CLASS C	NOTE 4
6	7	3/4"	XS	BUTTWELD 90° ELBOWS	CLASS C	NOTE 4
7	8	3/8"	-	SWOLK TO MALE PIPE WELD CONN SS-800-1-8M	SWAGELOK	NOTE 4
8	4	3/8"	-	PLUG	SWAGELOK	SS-800-P
9	4	3/8"	-	GLOBE VALVE SWAGELOK "H" SERIES	-	SS-6H-S4-C
10	5 LF	3/8"	065"	TUBING	S.S.	NOTE 4

GENERAL NOTES

1. PIPING FOR THIS SYSTEM IS TO BE FIELD CHECKED FOR INTERFERENCES PRIOR TO FABRICATION AND INSTALLATION.
2. FOR PIPING AND INSTRUMENTATION DIAGRAM FOR THIS SYSTEM, SEE 5613-M-3072, SH. 1.
3. A PORTION OF THE PIPING TO BE INSTALLED BY THIS DRAWING IS "QUALITY GROUP B", SAFETY RELATED, WITH THE REMAINDER OF THE PIPING & RAISING BEING "QUALITY GROUP SR", SAFETY RELATED.
4. FOR MATERIAL AND INSTALLATION SPECIFICATIONS, REFERENCE SPEC. 5177-PS-11, 5177-PS-12, 5177-M-52, 5177-J-710, AND SPLC-C-021.
5. FOR PIPE SUPPORT DETAILS, SEE DRAWING SERIES 5613-H-657.

REFERENCE DRAWINGS

5610-M-134	MAIN STEAM PIPING - CONTAINMENT & TURBINE AREA
5610-M-152	CTMT. AREA PIPING - AREA 5 - PLAN BELOW EL. 95'-0"
5610-M-158	CTMT. AREA PIPING - AREA 6 - PLAN BELOW EL. 95'-0"
5610-M-401C-31 SH.2	ITT - FLOW TUBE FABRICATED - INSERT TYPE
5613-P-657-S SH.1	MAIN STEAM SYSTEM ISOMETRIC - STRESS PROBLEM MS-4

REV	DATE	REVISION	BY	CH	APP	APP
0	11-21-95	ISSUED AS-BUILT FOR PC/M 94-129, INCORP. CRN'S M-8371, M-8477 AND ISSUED INTO THE FPL SYSTEM.	LSM	JFJ	-	JFK

FPL

TURKEY POINT NUCLEAR UNIT 3

PIPING ISOMETRIC

MAIN STEAM SYSTEM
FT-3-484 & FT-3-485 PIPING
STRESS PROBLEM MS-4

FLORIDA POWER & LIGHT

DRAWING NUMBER 5613-P-657-S

SHEET 2

SYS 072

REV 0

5613-P-657-S SH.2 REV-0

5613-P-658-S

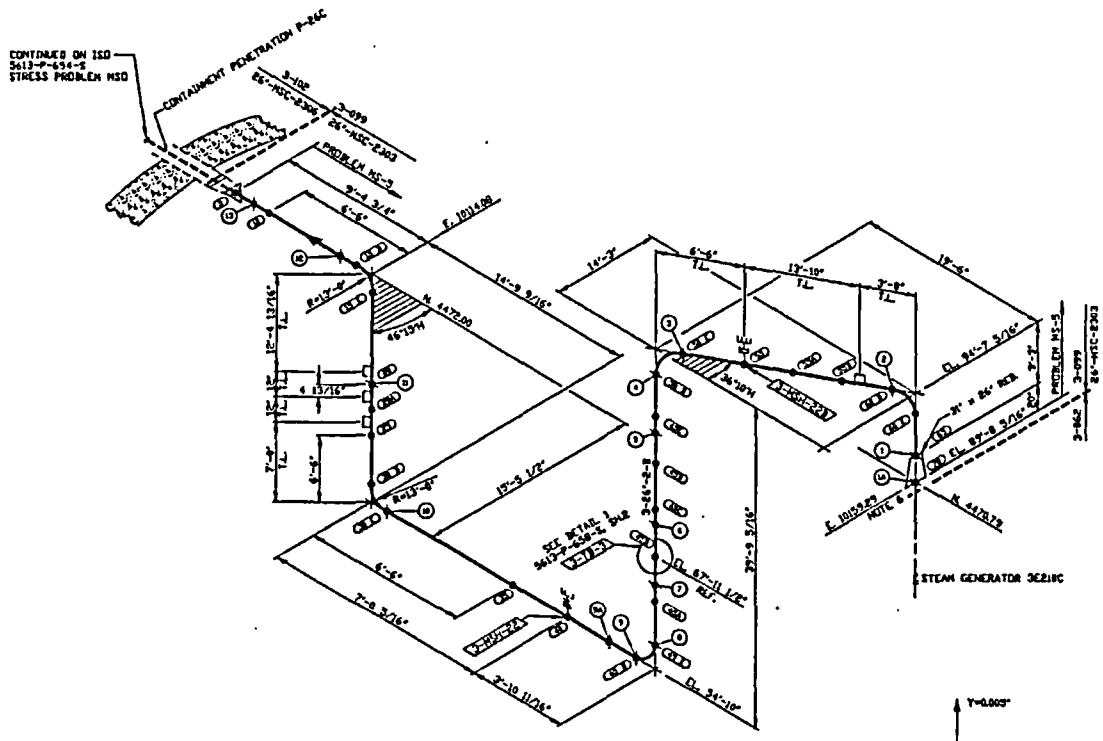

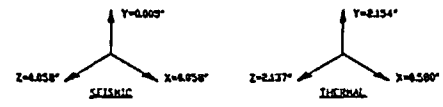

NOZZLE DISPLACEMENTS AT NODE CTO
STEAM GENERATOR 3E210C

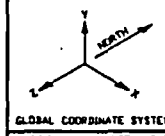

GLOBAL COORDINATE SYSTEM

RESTRAINTS	SINGLE ACTING IN DIRECTION OF STEM		
SNUBBER	DOUBLE ACTING	SPRING HANGER	
ANCHOR	GROUTED ANCHOR	VELBED STANCHION	
SUPPORT MARK NO.	ANALYSIS NODE NO.		

REFERENCE P&ID NO. 5613-M-3072 SH. 1
REFERENCE OPERATING DIAGRAM NO. 5613-M-3072 SH. 1
PIPING SYSTEM FROM STEAM GENERATOR 3E210C TO CONTAINMENT PENETRATION P-26C

THIS DRAWING MADE FROM 79-14 WALKDOWN INDEX FOR STRESS PROBLEM MS-5
REFERENCE DOCUMENTS: 5177-102-SK-P-506 REV. B

SEISMICALLY ANALYZED PIPING

REGION	HYDRO PRESS PSIG	DESIGN TEMP °F	DESIGN PRESS. PSIG	MAX OPERATING TEMP °F	MAX OPERATING PRESS. PSIG
ALL	1369	600	1085	547	1005

SYSTEM TEMPERATURE AND PRESSURE OPERATING MODES

MODE	TEMPERATURE °F	PRESSURE PSIG
NORMAL	535	891
EMERGENCY	535	

(XX) ISI WELD NUMBER | WHIP RESTRAINT | W WELD SYMBOL

PIPE MATERIAL	LINE SPEC	LINE SIZE	INSULATION
A193 GR-B7 CL1	3-26"-2-B	NOTE 3	3 1/2"
A106 GR. B	3-3/4"-2-C	3/4" SCH 80	NONE

NOTES:
1) ALL ELBOWS ASSUMED LONG RADIUS UNLESS OTHERWISE SPECIFIED
2) FOR PIPE SUPPORT DETAILS SEE DRAWING SERIES 5613-H-658
3) PIPING IS 26" O.D. WITH .837" WALL FOR STRAIGHT RUNS AND 26" O.D. WITH .896" WALL FOR BENDS
4) SUPPORT STIFFNESSES MAY APPLY. CHECK ANALYSIS OF RECORD FOR STIFFNESSES.
5) SEE CALCULATION 6900-074-02 FOR EQUIPMENT MOTIONS, VALVE WEIGHTS, ETC.
6) NODE (20) IS AN ANALYTICAL ANCHOR.
7) ALL ISI INFORMATION, WELD NUMBERS & LOCATIONS, ZONES, LINE NUMBERS & WHIP RESTRAINT LOCATIONS ARE FOR ISI REFERENCE ONLY.

ZONE NUMBER	LINE NUMBER
3-099	26"-MSC-2303

NO	DATE	REVISION	BY	CH	COR	APP
4	7/14/95	ISSUED AS BUILT FOR PCR 95-149 AND REVISED TITLE BLOCK AS SHOWN	VJ			
3	12/10/94	ISSUED AS-BUILT FOR PCR 94-129				
2	8/8/94	REVISED PER DCR-TPN-93-095, ADDED ISI WELD NUMBERS, ZONE NUMBERS AND WELD SYMBOLS - REVISION CLOUD OMITTED.				
1	5/19/94	AS-BUILT PER DCR-TPN-91-080				
0	1/26/94	THIS DWG HAS BEEN MADE FROM SUPERSEDED DWG 5177-102-SK-P-506 REV. B AS-BUILT PER DWG/TELEDYNE ISI REPAIR.				

DATE | SCALE
FPL
JR MCN | ER MD
CH JM | COR RHE
APPROVED FM

TURKEY POINT NUCLEAR POWER PLANT
UNIT 3
MAIN STEAM SYSTEM
SYSTEM NO. 72 INSIDE CONTAINMENT
STRESS PROBLEM MS-5

TELEDYNE ENGINEERING SERVICES
SHEET 1
5613-P-658-S
REV NO 4

FILE: UTP00177.DWG

5613-P-658-S SH-1 REV-4

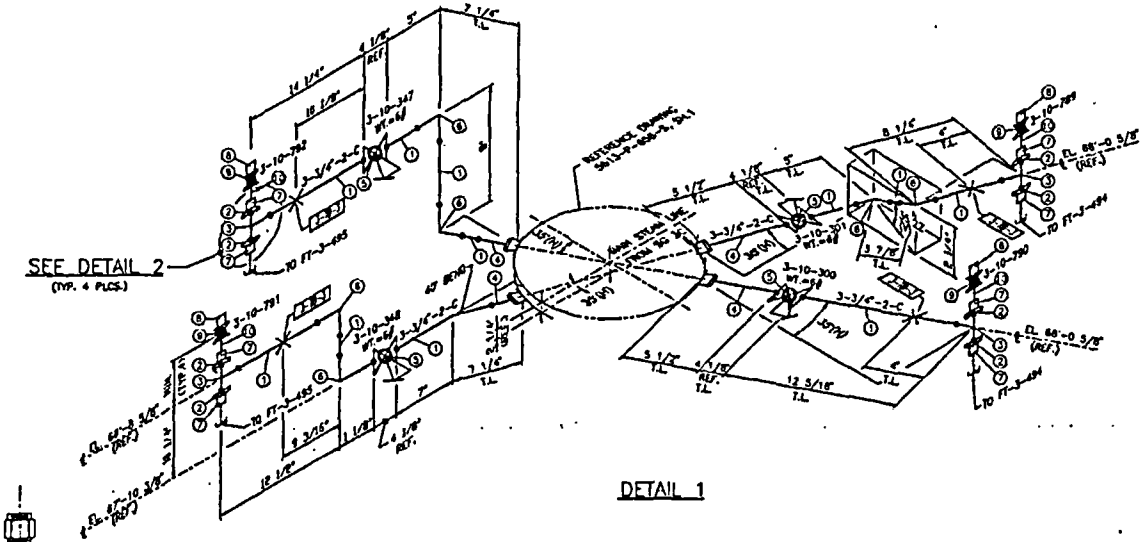

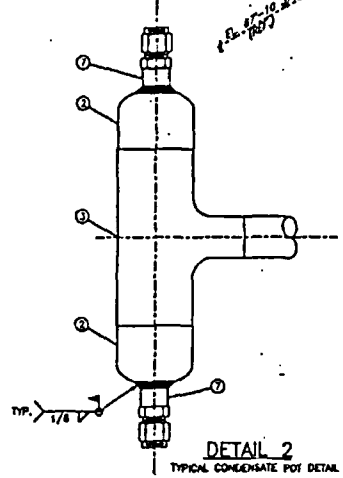

DETAIL 2
TYPICAL CONDENSATE POT DETAIL

BILL OF MATERIALS

MARK	QTY	SIZE	SCH/WT	COMPONENT DESCRIPTION	MFG	MATERIAL
1	10 LF	3/4"	80	PIPE	CLASS C	NOTE 4
2	6	1 1/2"	XS	BUTTWELD CAP	CLASS C	NOTE 4
3	4	-	XS	1 1/2" X 3/4" 90 WPB TEE	CLASS C	NOTE 4
4	4	3/4"	XS	INPOLET X X 1 1/2" LG (NOTE 4C)	CLASS C	C.S.
5	4	3/4"	800#	BUTTWELD GLOBE VALVE - HEPOTCET	CLASS C	NOTE 4
6	6	3/4"	XS	BUTTWELD 90° ELBOWS	CLASS C	NOTE 4
7	8	3/4"	-	SWOLE TO MALE PIPE, FIELD COPY, 88-809-1-06	SWAGELOK	NOTE 4
8	4	3/4"	-	PLUG	SWAGELOK	88-809-P
9	4	3/4"	-	GLOBE VALVE SWAGELOK "H" SERIES	-	SS-6H0SS-C
10	5 LF	3/4"	.049"	TUBING	S.S.	NOTE 4

GENERAL NOTES

1. PIPING FOR THIS SYSTEM IS TO BE FIELD CHECKED FOR INTERFERENCES PRIOR TO FABRICATION AND INSTALLATION.
2. FOR PIPING AND INSTRUMENTATION DIAGRAM FOR THIS SYSTEM, SEE 5613-M-3072, SH. 1.
3. A PORTION OF THE PIPING TO BE INSTALLED BY THIS DRAWING IS "QUALITY GROUP B", SAFETY RELATED, WITH THE REMAINDER OF THE PIPING & TUBING BEING "QUALITY GROUP SH", SAFETY RELATED.
4. FOR MATERIAL AND INSTALLATION SPECIFICATIONS, REFERENCE SPEC. 8177-PS-11, 8177-PS-12, 8177-M-52, 8177-J-710, AND SPEC-C-021 IT SHALL BE NOTED THAT ALL PIPE FITTINGS ARE BUTT WELDED.
5. FOR PIPE SUPPORT DETAILS, SEE DRAWING SERIES 5613-H-658.

REFERENCE DRAWINGS

5610-M-134	MAIN STEAM PIPING - CONTAINMENT & TURBINE AREA
5610-M-152	CTMT. AREA PIPING - AREA B - PLAN BELOW EL. 95'-0"
5610-M-158	CTMT. AREA PIPING - AREA B - PLAN BELOW EL. 95'-0"
5610-M-401C-31 SH.2	RT - FLOW TUBE FABRICATED - INSERT TYPE
5613-P-658-S SH.1	MAIN STEAM SYSTEM ISOMETRIC - STRESS PROBLEM MS-5

REV	DATE	REVISION	BY	CH	APP	APP
0	8-24-87	ISSUED AS-BUILT FOR PC/M 94-129, INCORP. CHN'S M-8371, M-8477 AND ISSUED INTO THE FPL SYSTEM.	LSM	JFT	-	JK

FPL

TURKEY POINT NUCLEAR UNIT 3

PIPING ISOMETRIC

MAIN STEAM SYSTEM
FT-3-494 & FT-3-495 PIPING
STRESS PROBLEM MS-5

FLORIDA POWER & LIGHT

DRAWING NUMBER: 5613-P-658-S

SIZE: 072

REV: 0

SHEET 2

5613-P-658-S SH-2 REV-0

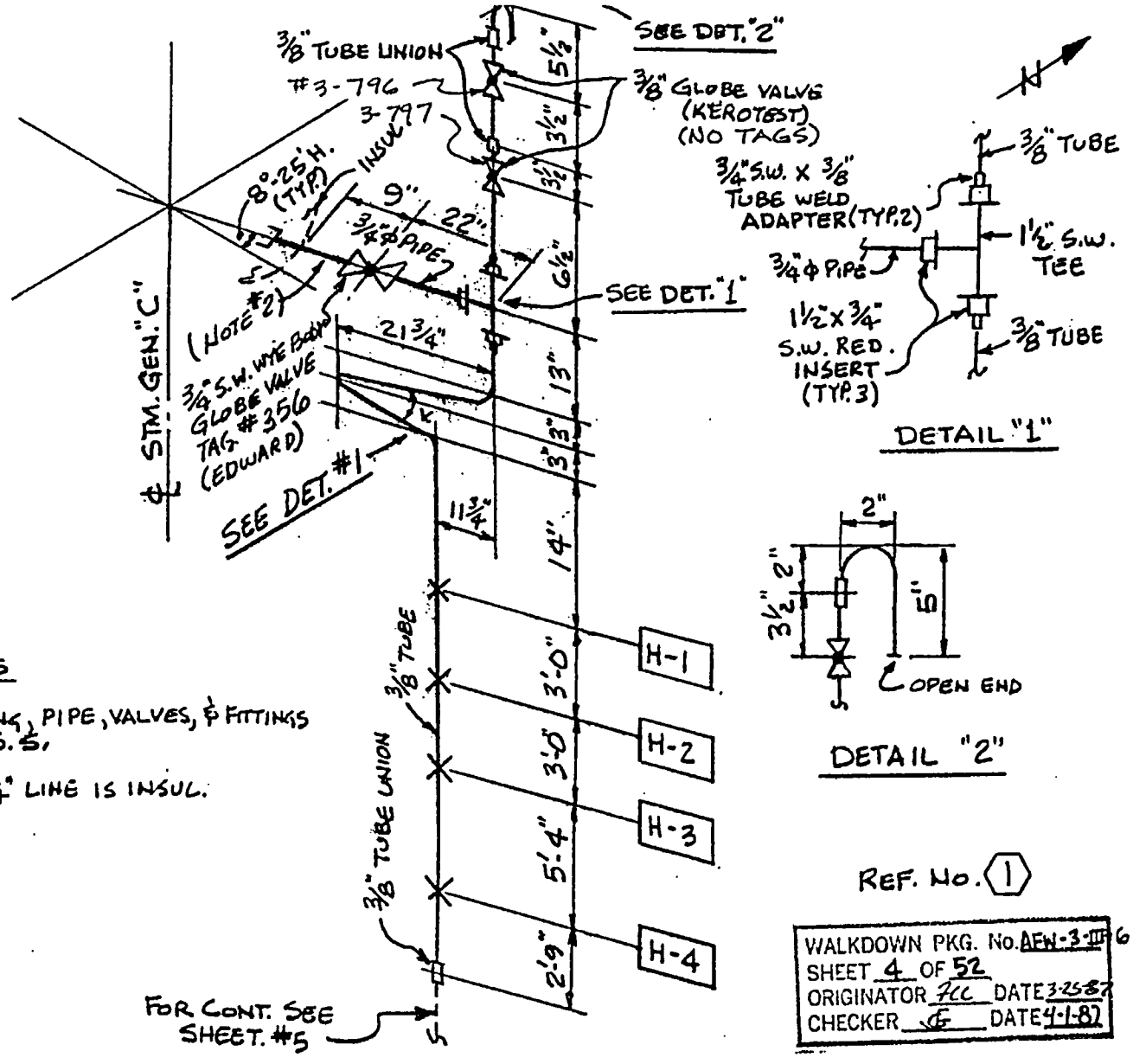

NOTES

1. TUBEING, PIPE, VALVES, & FITTINGS ARE S.S.
2. THE 3/4" LINE IS INSUL.

REF. NO. 1

WALKDOWN PKG. No. AFW-3-III 6
SHEET 4 OF 52
ORIGINATOR FCC DATE 3-25-87
CHECKER JG DATE 4-1-87

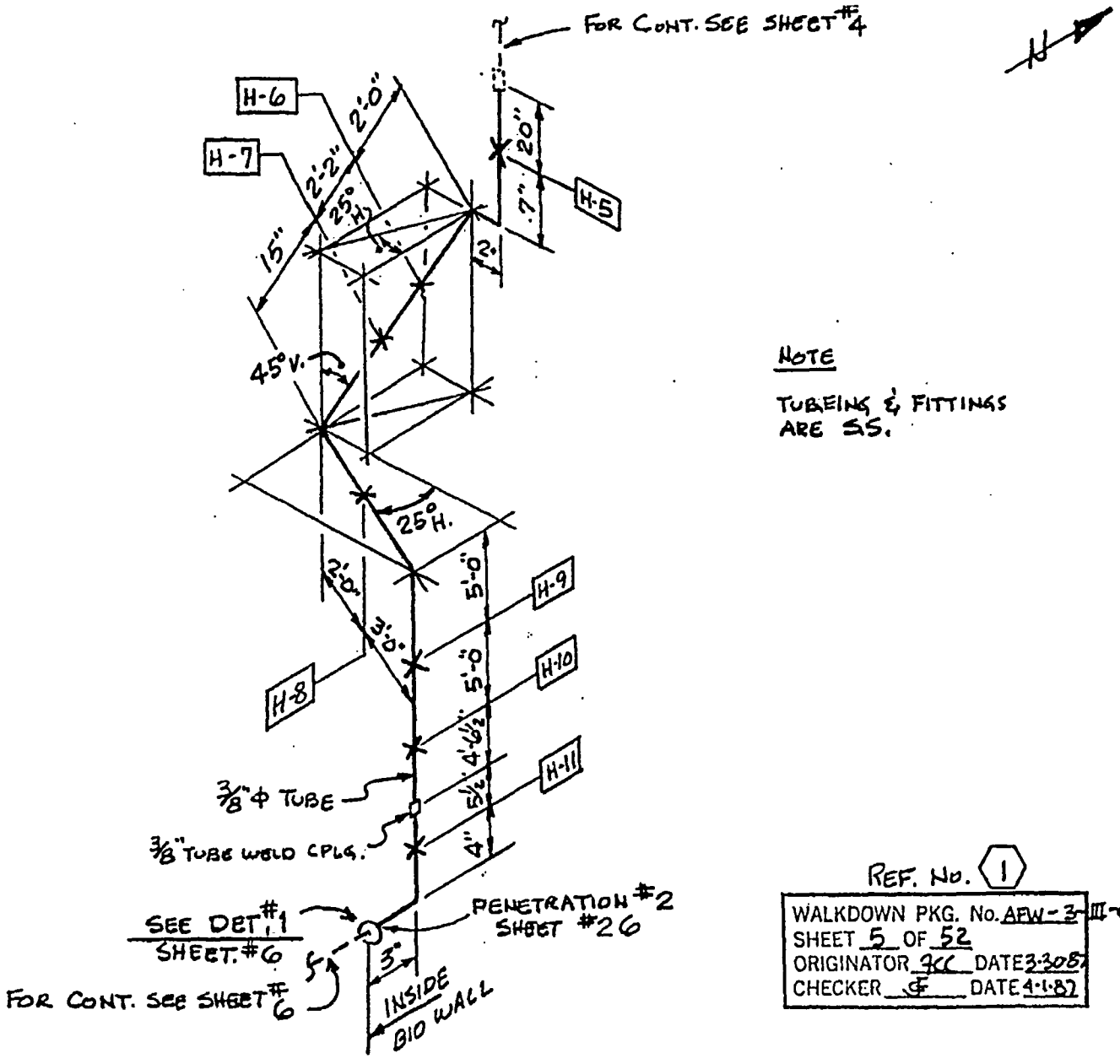

NOTE

TUBEING & FITTINGS ARE SS.

REF. NO. 1

WALKDOWN PKG. No. AFW-3-III-6
SHEET 5 OF 52
ORIGINATOR JCC DATE 3-30-87
CHECKER CF DATE 4-1-87

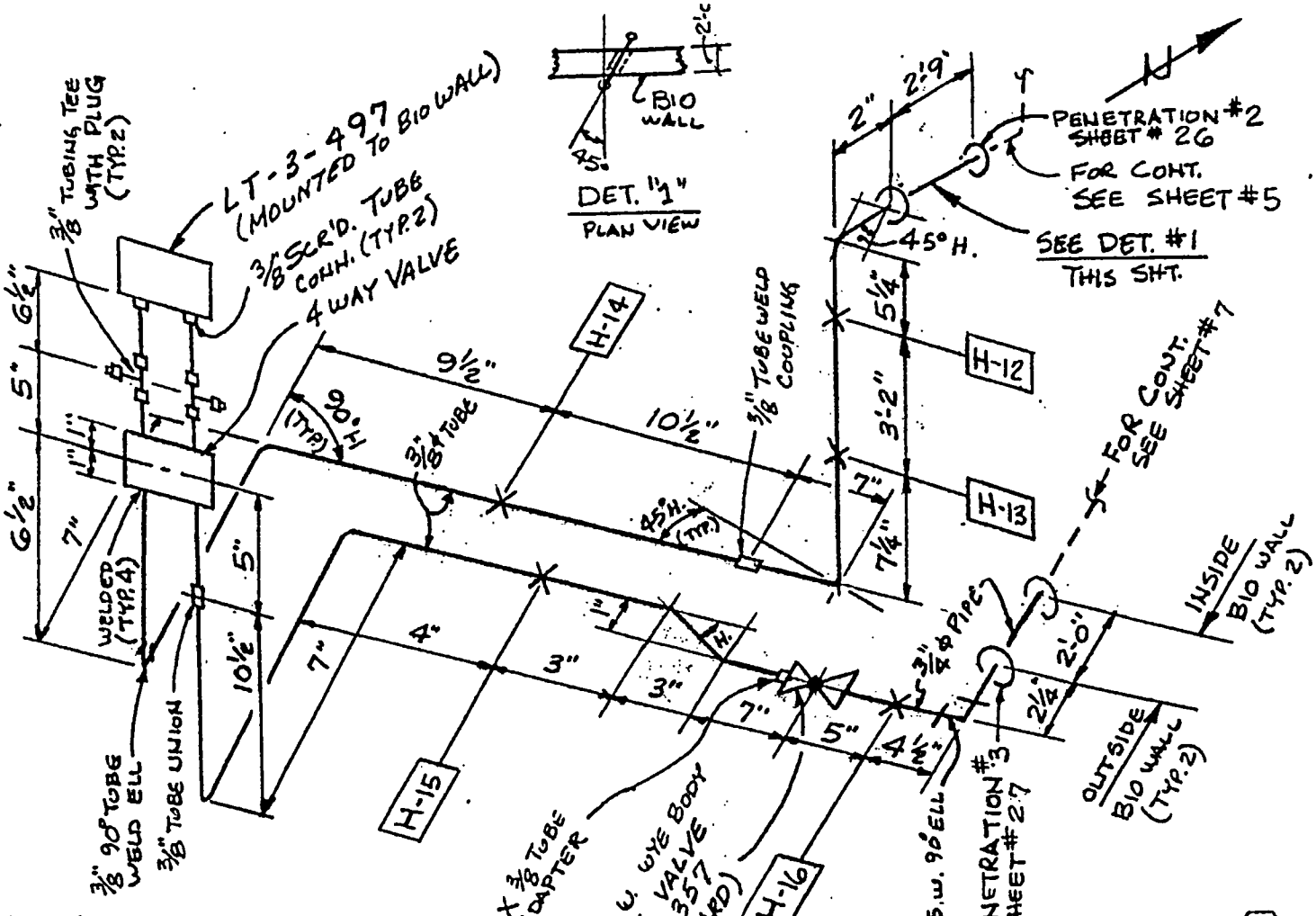

NOTES

1. TUBE, PIPE, VALVES, & FITTINGS ARE S.S.
2. SEE SHT. 48 FOR PHOTO

REF. NO. (1)

WALKDOWN PKG. No. AFW-3-III-6
SHEET 6 OF 52
ORIGINATOR JCC DATE 3-27-87
CHECKER [illegible] DATE 4-1-87

NOTES

1. ALL PIPE IS INSUL.

2. PIPE, VALVE, & FITTINGS ARE S.S.

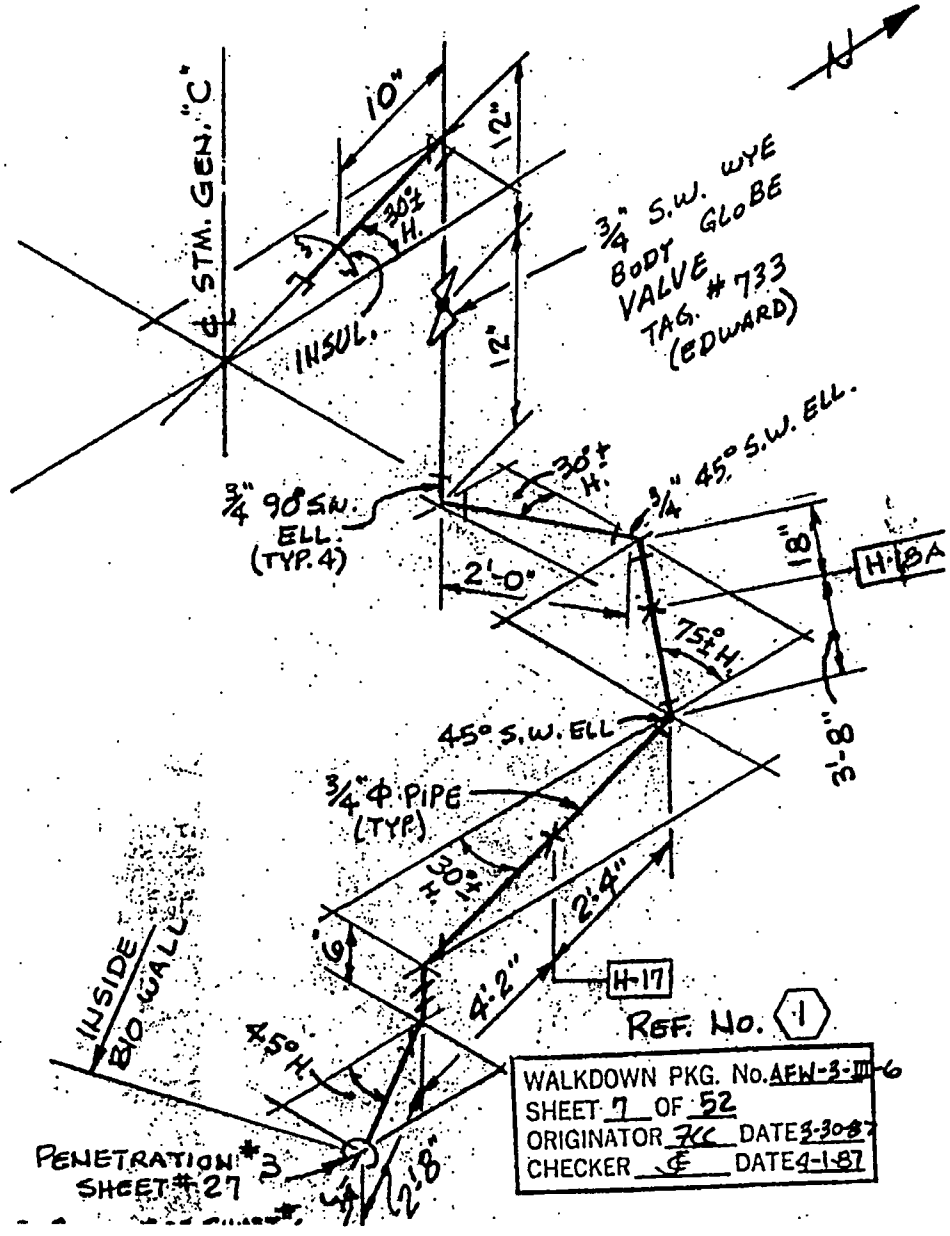

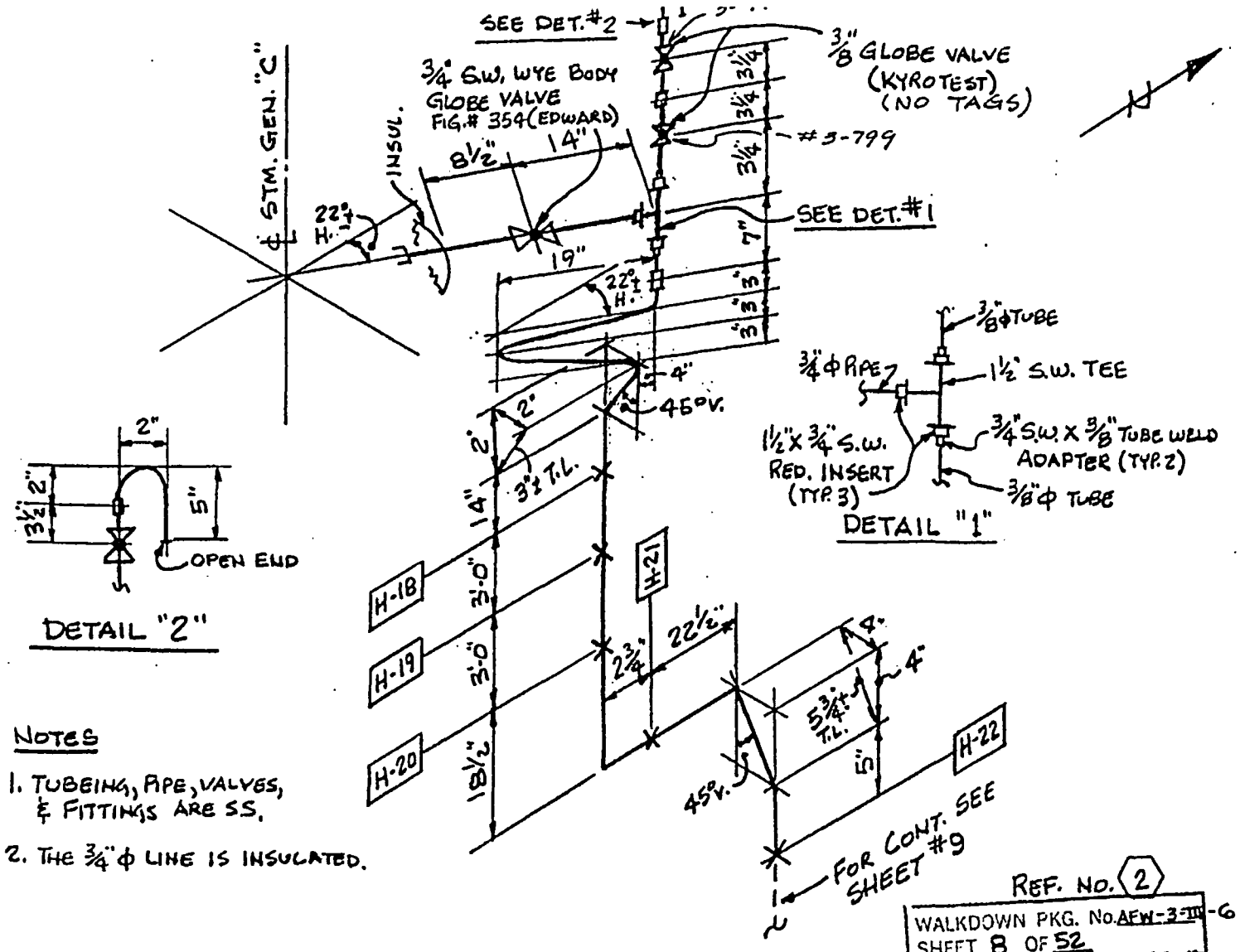

NOTES

1. TUBEING, PIPE, VALVES, & FITTINGS ARE SS.
2. THE 3/4" ϕ LINE IS INSULATED.

REF. NO. 2

WALKDOWN PKG. No. AFW-3-III-6
SHEET 8 OF 52
ORIGINATOR JKC DATE 3-31-87
CHECKER SF DATE 4-1-87

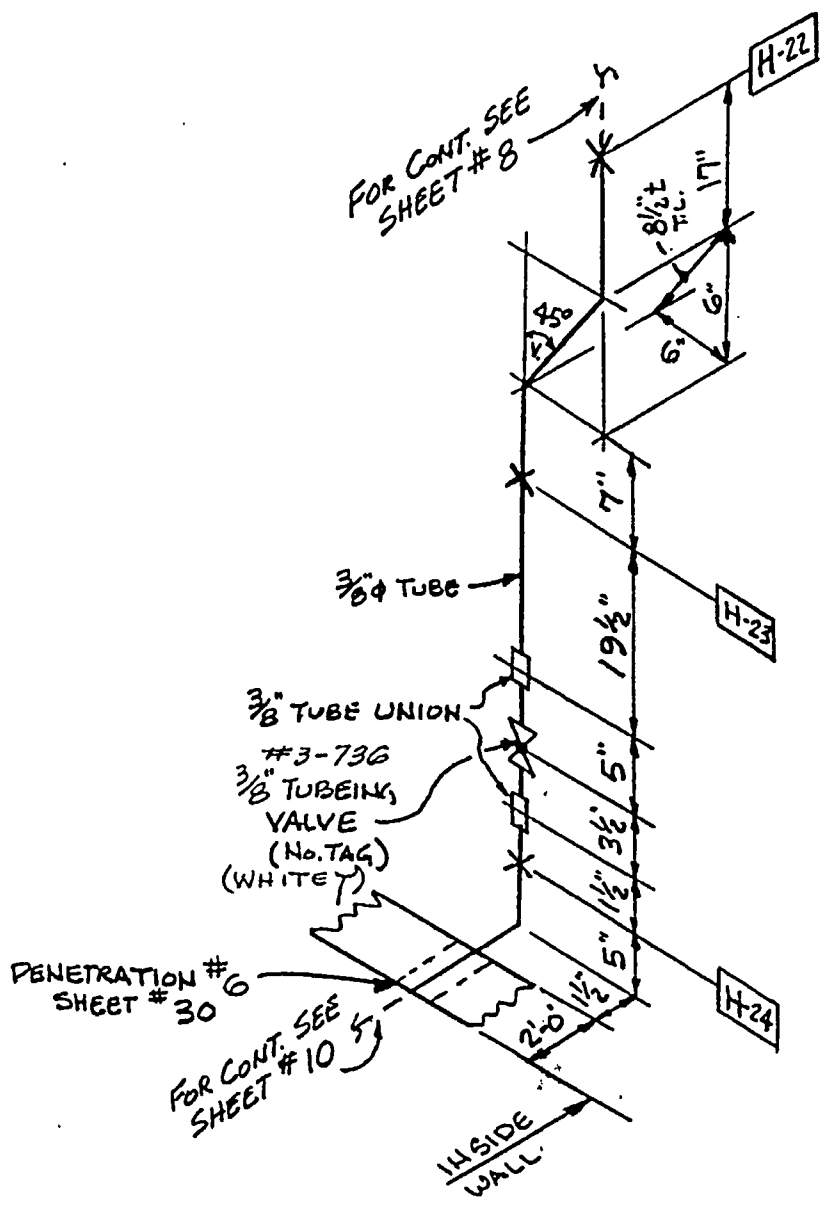

NOTE:

TUBEING, FITTINGS & VALVE ARE S.S.

REF. No. 2

WALKDOWN PKG. No. AFW-3-II-6
SHEET 9 OF 52
ORIGINATOR TCC DATE 3-31-87
CHECKER JE DATE 4-1-87

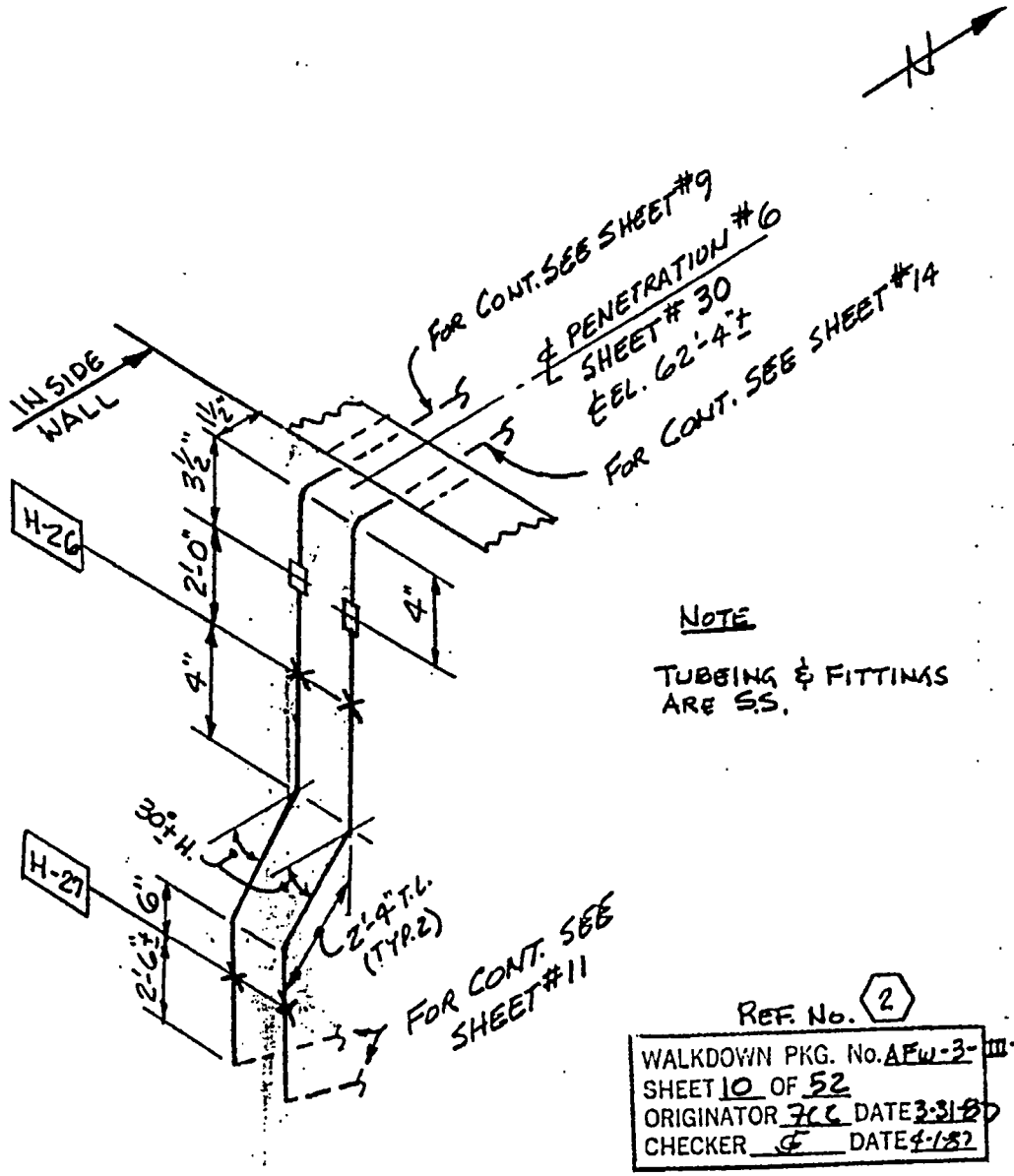

NOTE

TUBEING & FITTINGS ARE S.S.

REF. No. 2

WALKDOWN PKG. No. AFW-3-III-6
SHEET 10 OF 52
ORIGINATOR JCC DATE 3-31-87
CHECKER G DATE 4-1-87

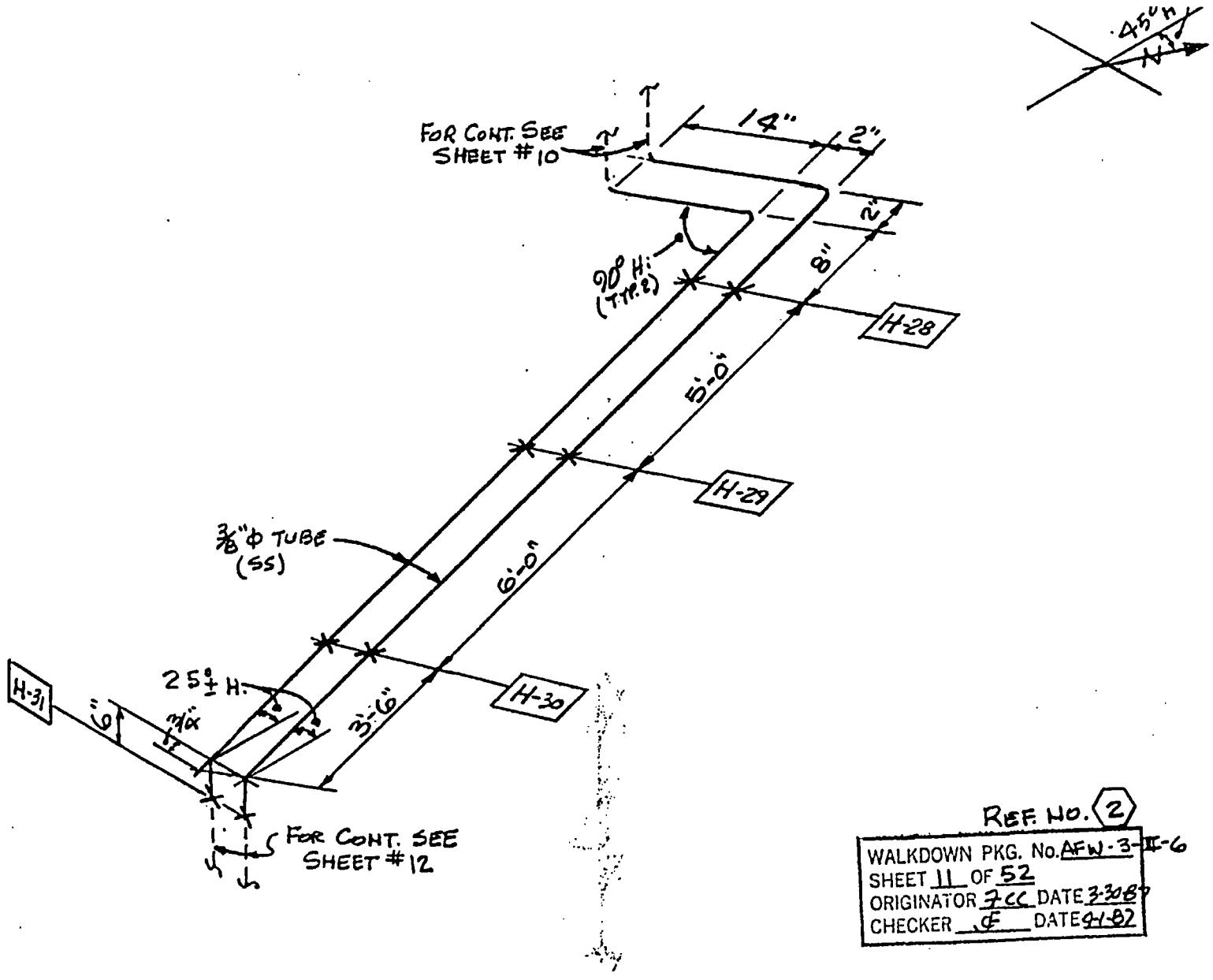

REF. NO. 2

WALKDOWN PKG. No. AFW-3-II-6
SHEET 11 OF 52
ORIGINATOR JCC DATE 3-30-82
CHECKER CF DATE 4-1-82

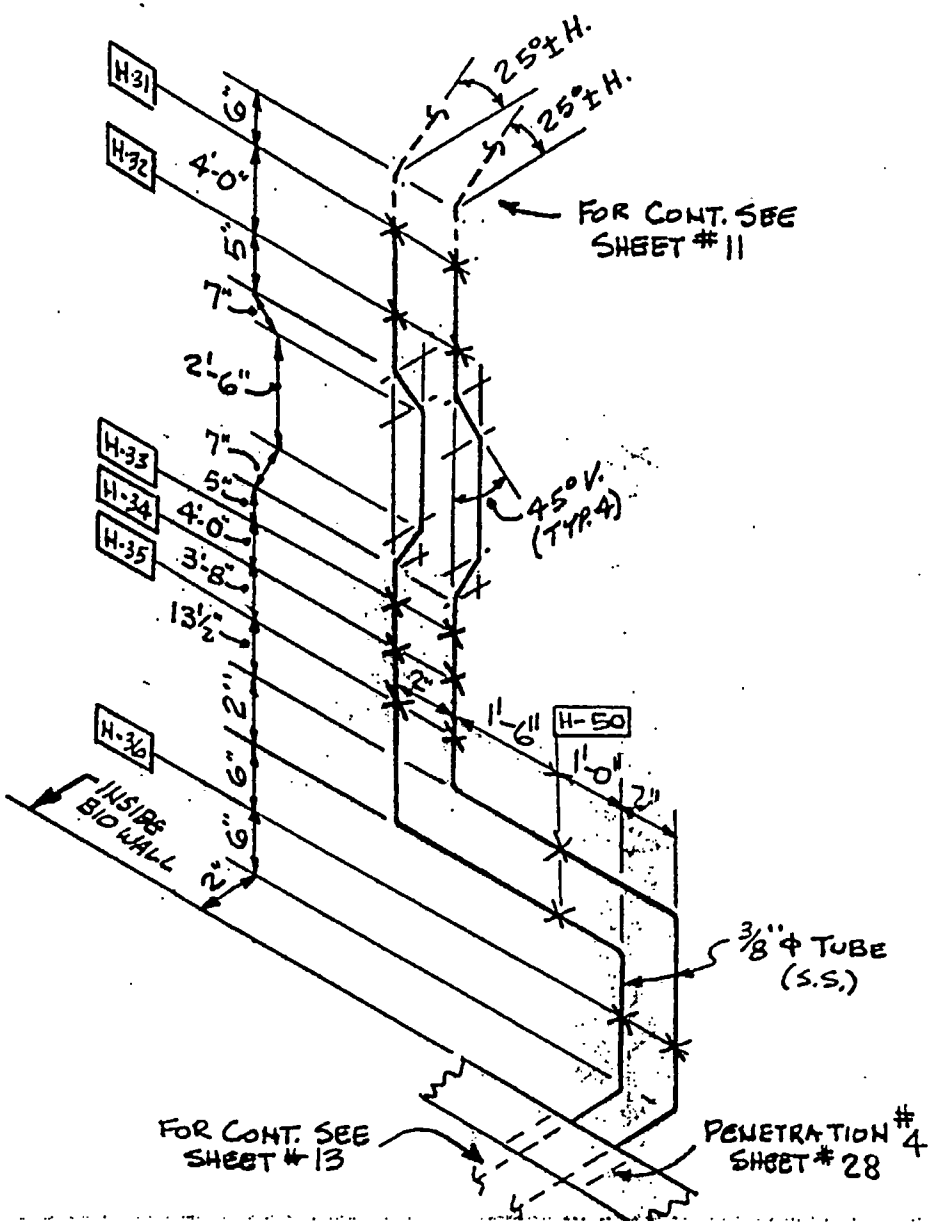

REF. NO. 2

WALKDOWN PKG. No. AFW-3- III-6
SHEET 12 OF 52
ORIGINATOR JCC DATE 3-30-87
CHECKER CE DATE 4-1-87

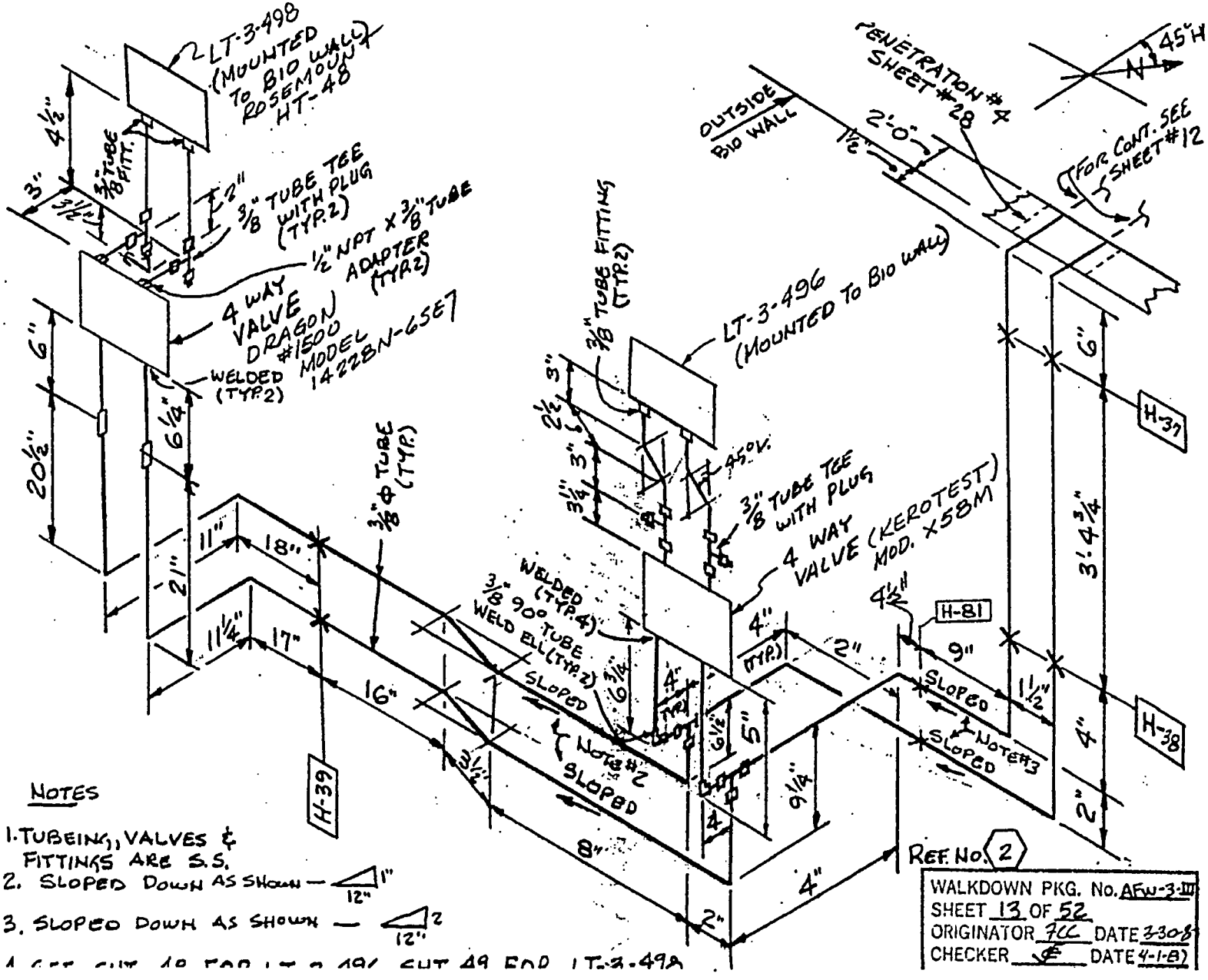

NOTES

1. TUBEING, VALVES & FITTINGS ARE S.S.
2. SLOPED DOWN AS SHOWN — 1" / 12"
3. SLOPED DOWN AS SHOWN — 2 / 12"
4. CUT 18 FOR LT-3-496 CUT 49 FOR LT-3-498

REF. NO. 2

WALKDOWN PKG. No. AFW-3-III
SHEET 13 OF 52
ORIGINATOR FCC DATE 3-30-8
CHECKER [illegible] DATE 4-1-81

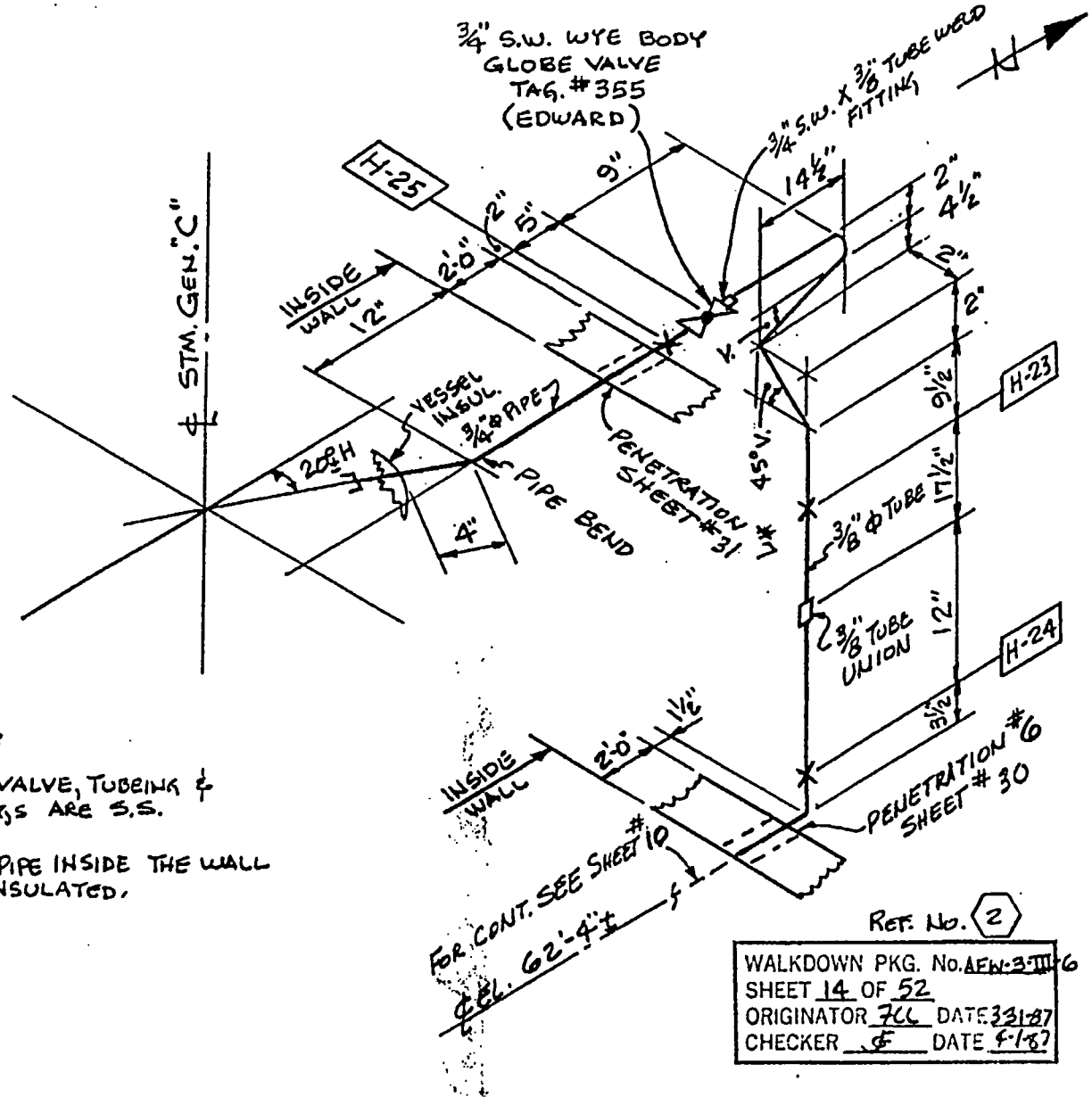

NOTES

1. PIPE, VALVE, TUBEING & FITTINGS ARE S.S.
2. 3/4" Φ PIPE INSIDE THE WALL IS INSULATED.

REF. No. 2

WALKDOWN PKG. No. AFW-3-III-6
SHEET 14 OF 52
ORIGINATOR FCC DATE 3-31-87
CHECKER JF DATE 4-1-87

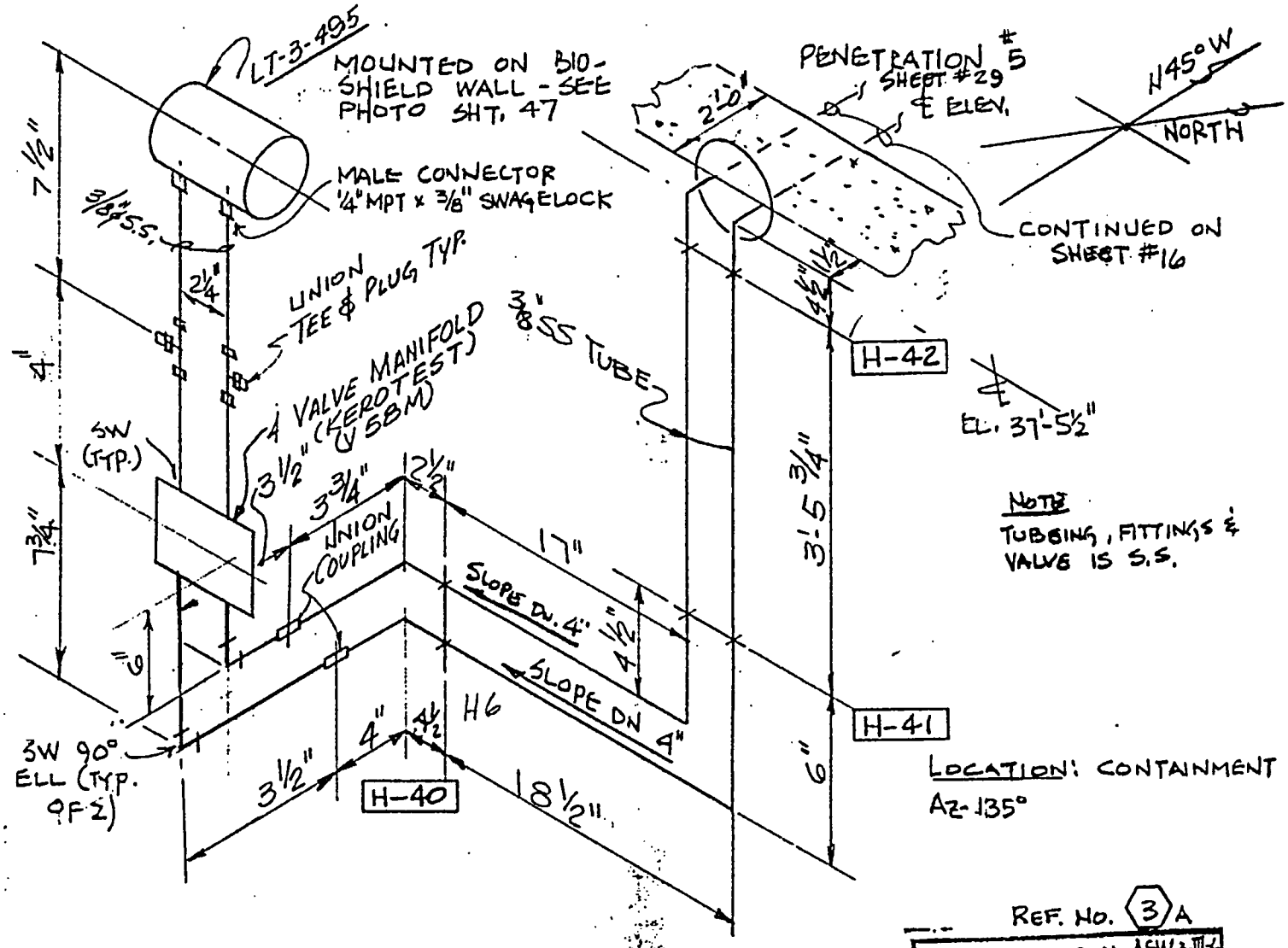

REF. NO. 3 A

WALKDOWN PKG. No. AFW-3-III-6
SHEET 15 OF 52
ORIGINATOR G DATE 3/29/87
CHECKER FCL DATE 4-1-87

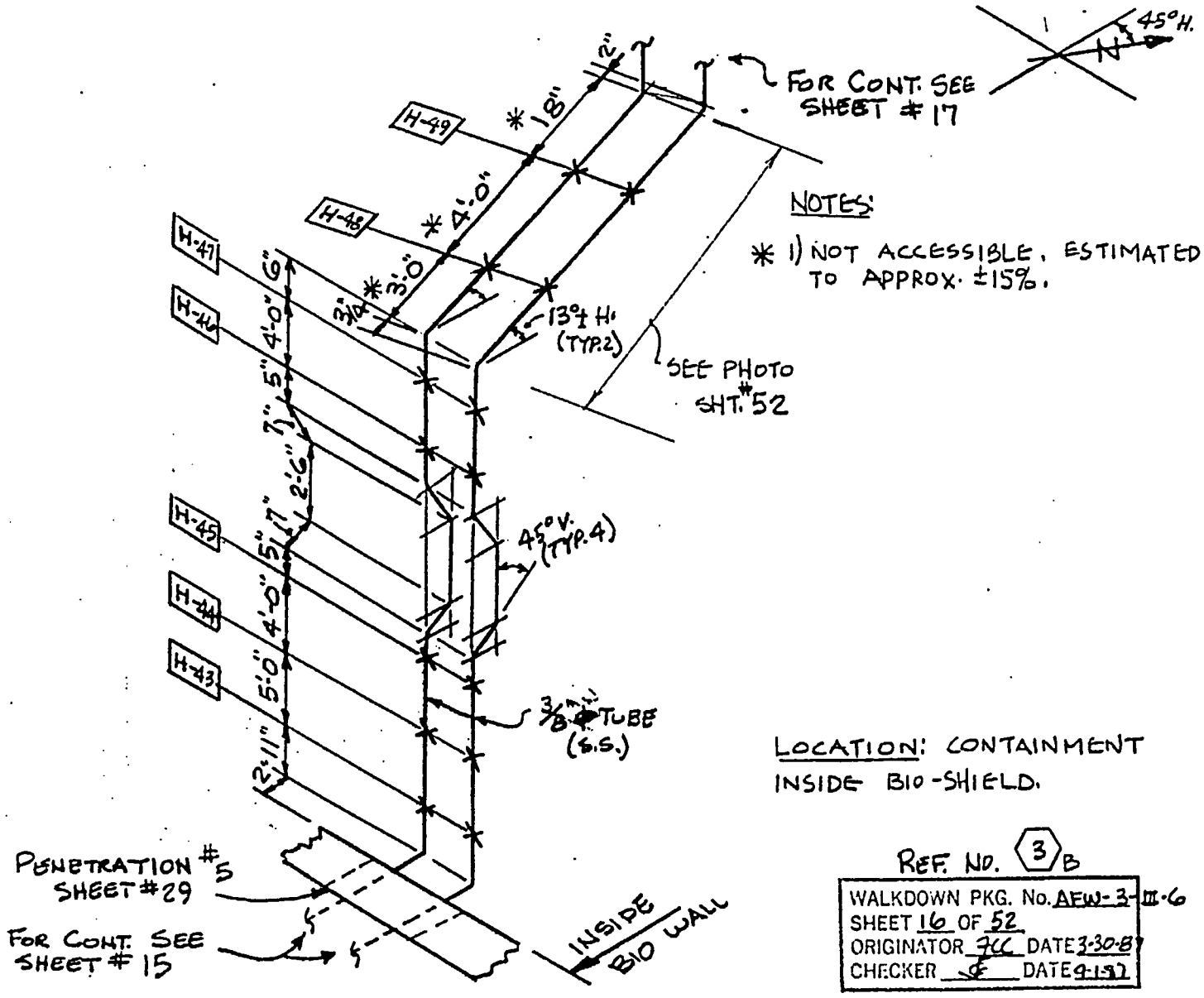

NOTES:

* 1) NOT ACCESSIBLE, ESTIMATED TO APPROX. ±15%.

LOCATION: CONTAINMENT INSIDE BIO-SHIELD.

REF. NO. 3 B

WALKDOWN PKG. No. AFW-3-III-6
SHEET 16 OF 52
ORIGINATOR JCC DATE 3-30-87
CHECKER [illegible] DATE 4-1-87

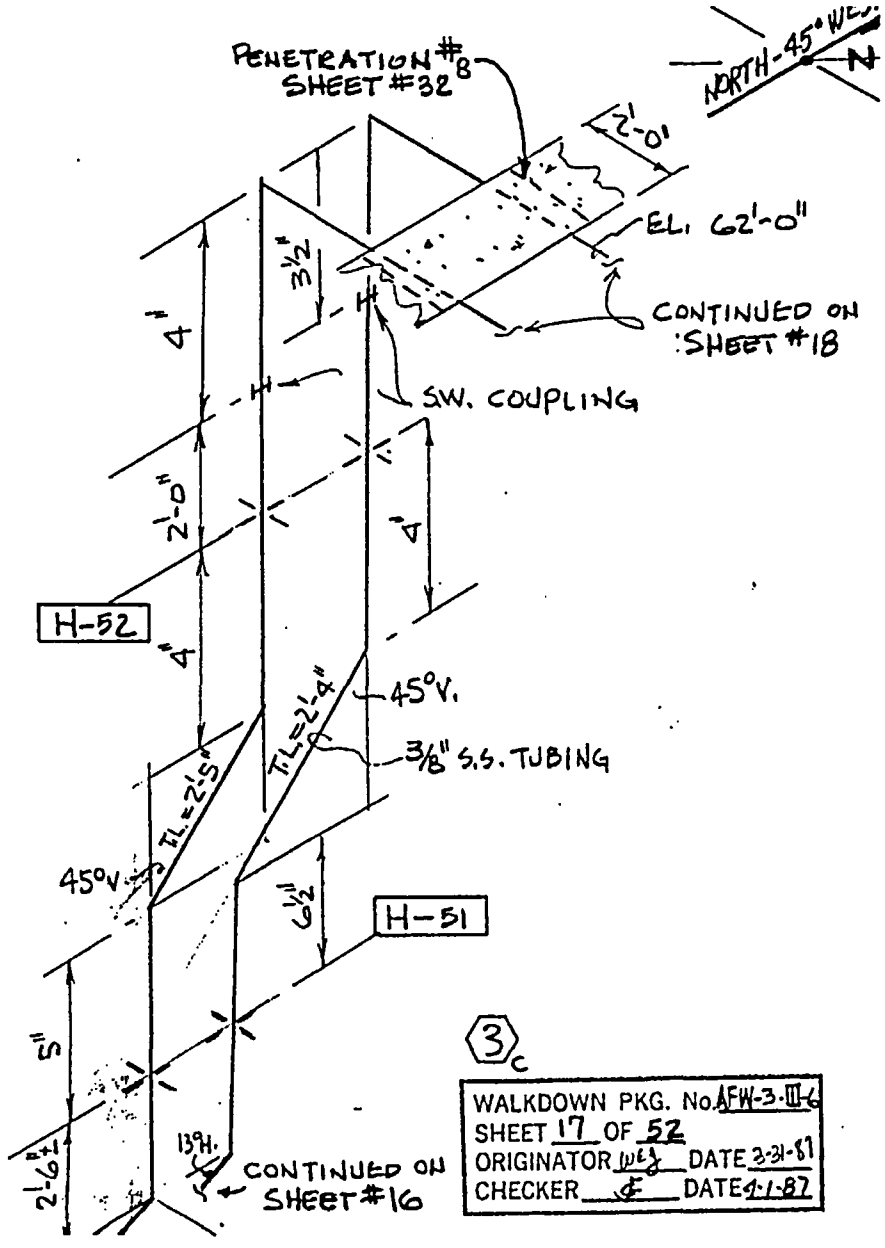

3c

WALKDOWN PKG. No. AFW-3-III-6
SHEET 17 OF 52
ORIGINATOR WEJ DATE 3-31-87
CHECKER [illegible] DATE 4-1-87

NOTES:

1. VALVE 3-20-353 IS ROCKWELL - EDWARDS Y-PATTERN GLOBE; 1500# 3/4" S.W.
2. VALVE 3-20-735 IS KEROTEST 3/8" O.D., S.W.
3. 3/8" S.S. TUBING U.N.O.
4. 3/4" PIPE ASSUMED TO BE SCH. 160 PER FSK-M-841

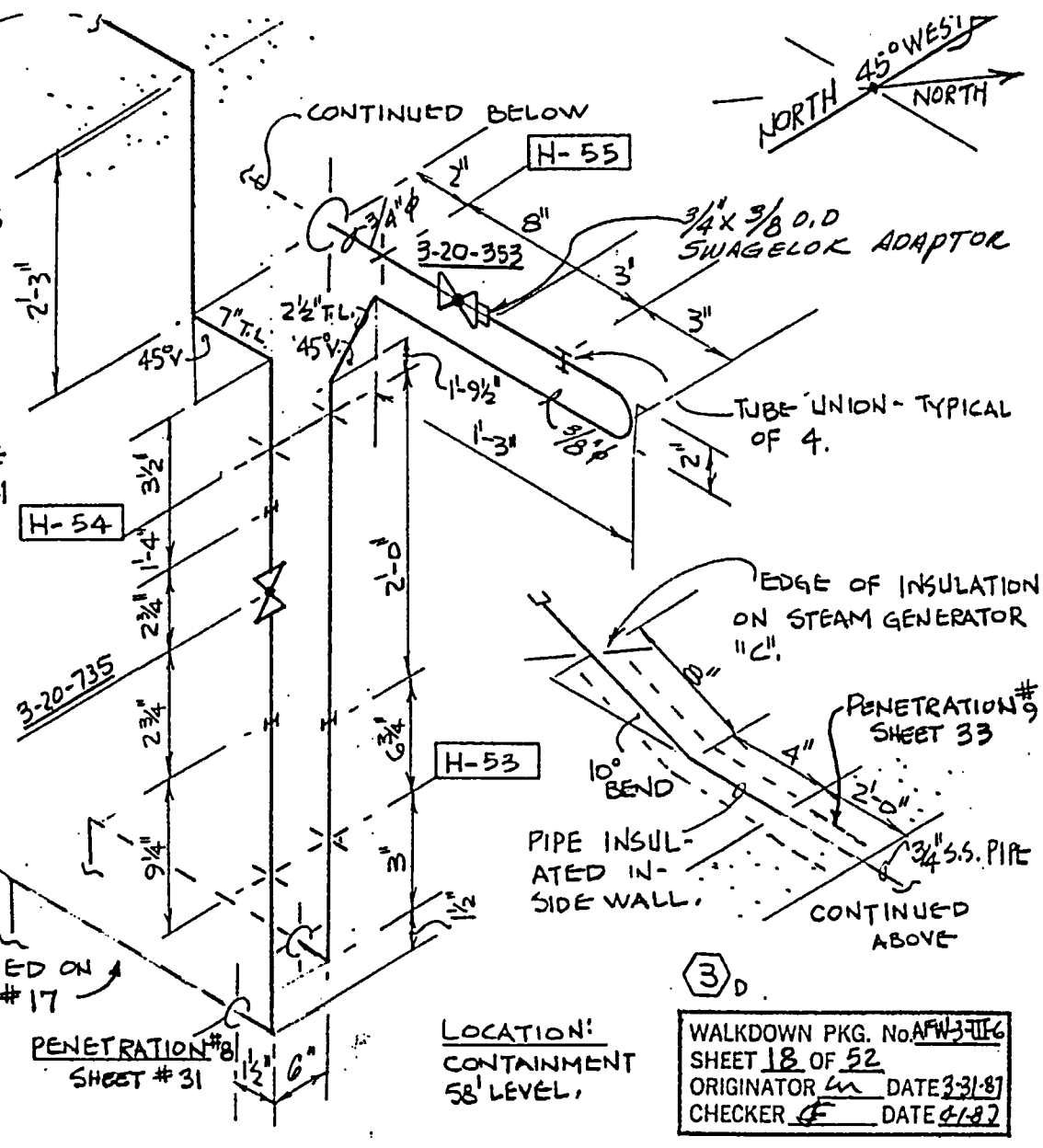

LOCATION:
CONTAINMENT
58' LEVEL.

3 D

WALKDOWN PKG. No.	AFW-3-TT-6
SHEET 18 OF 52	
ORIGINATOR	DATE 3-31-87
CHECKER	DATE 4-1-87

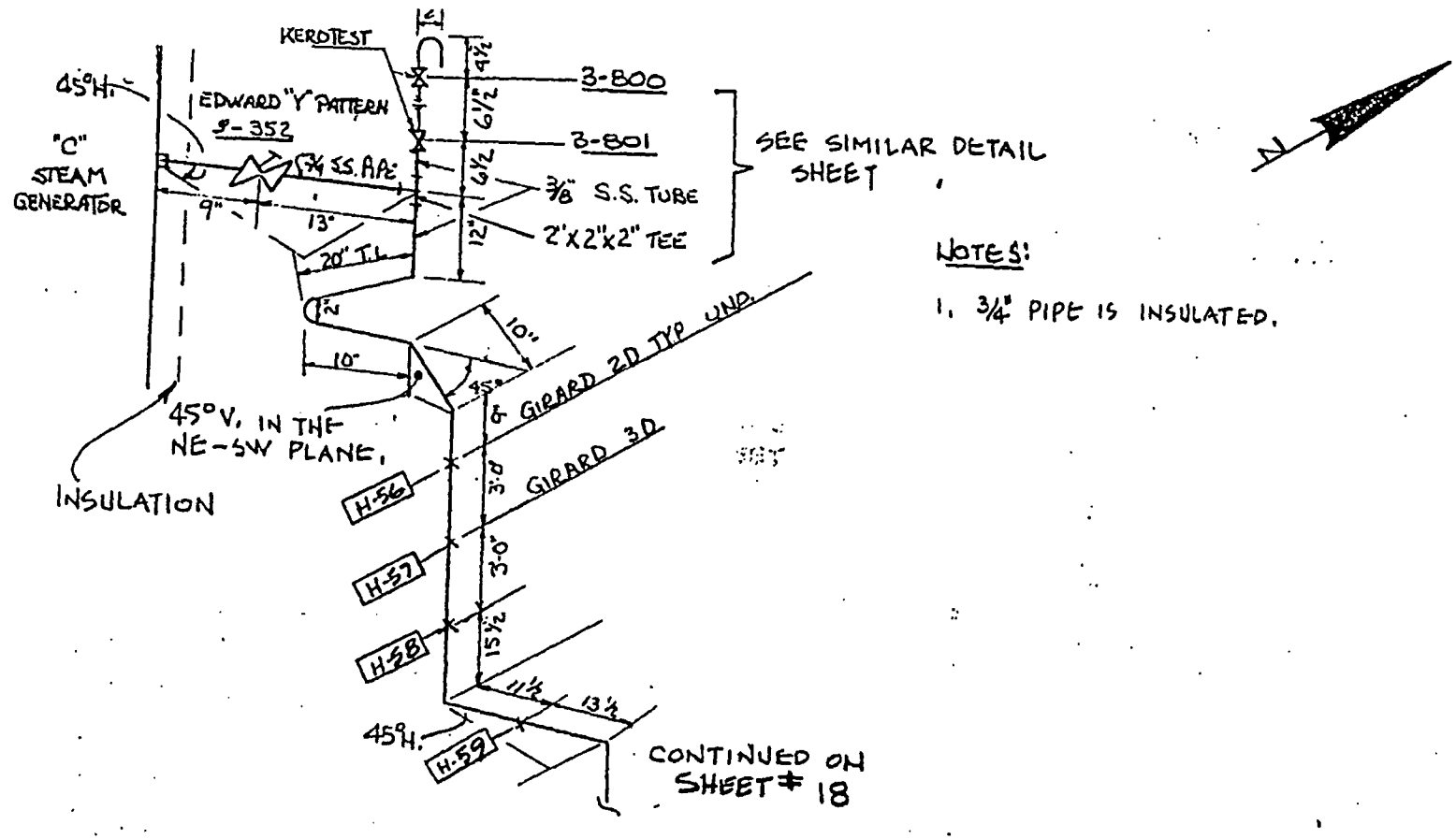

NOTES:

1. 3/4" PIPE IS INSULATED.

NOTE: TUBE BENDS ARE
5D UNO

3 E

WALKDOWN PKG. No.	AFW-3-III-6
SHEET 19 OF 52	
ORIGINATOR PHS	DATE 3-23-87
CHECKER JE	DATE 2-1-87

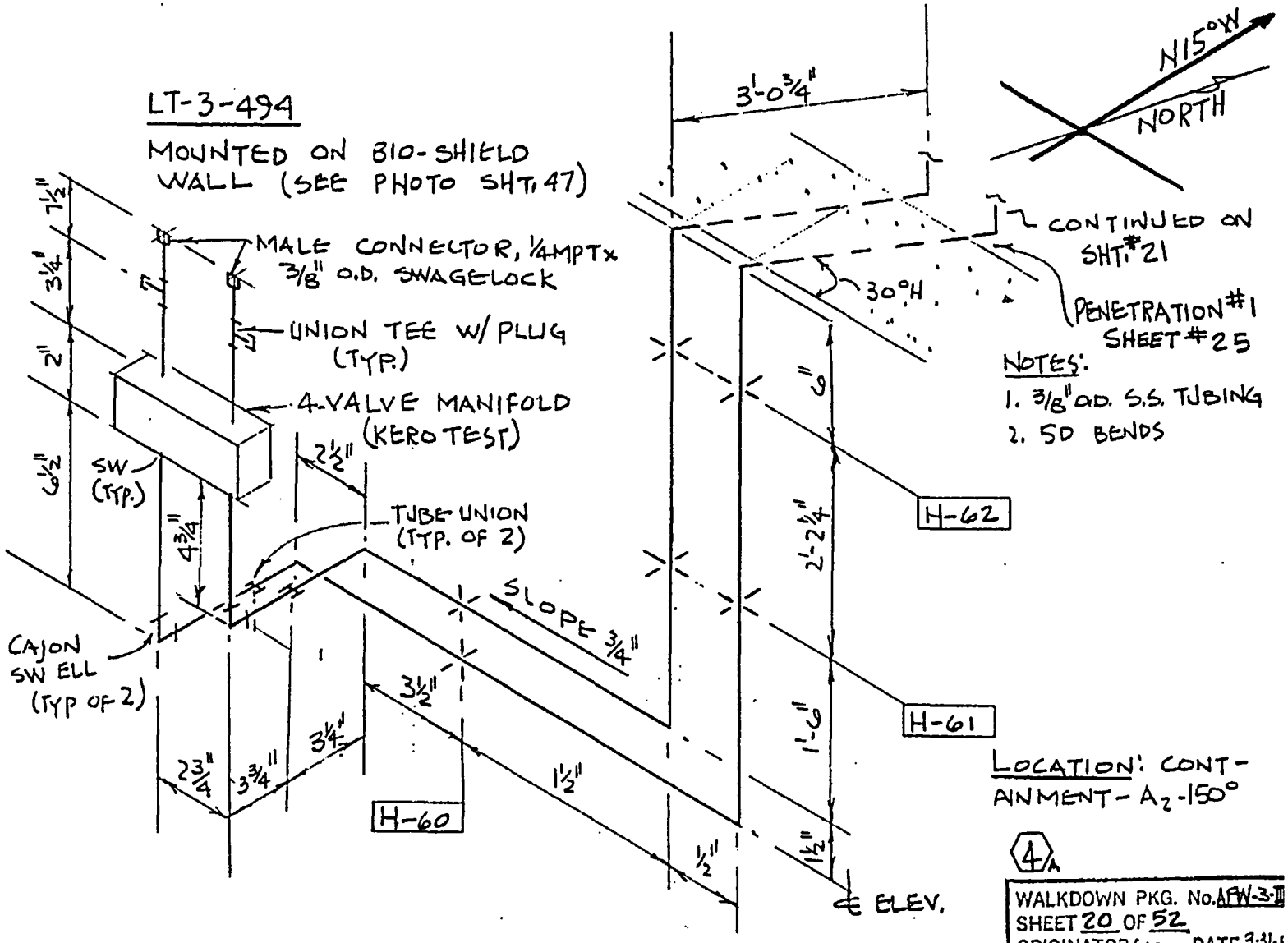
LT-3-494
MOUNTED ON BIO-SHIELD WALL (SEE PHOTO SHT. 47)
MALE CONNECTOR, 1/4MPT x 3/8" O.D. SWAGELOCK
UNION TEE W/ PLUG (TYP.)
4-VALVE MANIFOLD (KEROTEST)
SW (TYP.)
TUBE UNION (TYP. OF 2)
CAJON SW ELL (TYP OF 2)
SLOPE 3/4"
H-60
H-61
H-62
3'-0 3/4"
30°H
CONTINUED ON SHT. #21
PENETRATION #1 SHEET #25
N15°W
NORTH
NOTES:
1. 3/8" OD. S.S. TUBING
2. 5D BENDS
LOCATION: CONTAINMENT - A2 - 150°
℄ ELEV.
4A
WALKDOWN PKG. No. AFW-3-II
SHEET 20 OF 52
ORIGINATOR
DATE
CHECKER
DATE

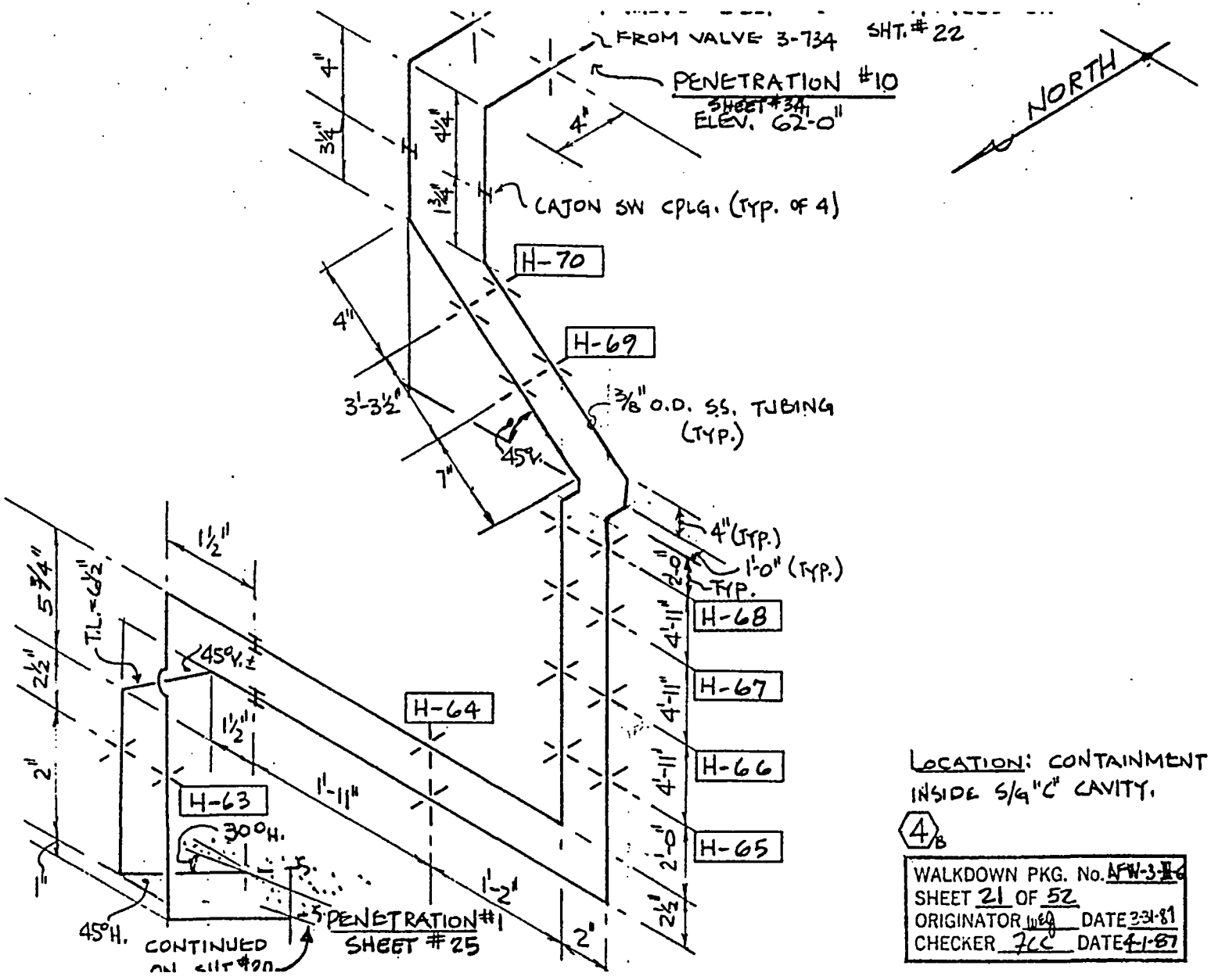

LOCATION: CONTAINMENT INSIDE S/G "C" CAVITY.

4/B

WALKDOWN PKG. No. AFW-3-II-6	
SHEET 21 OF 52	
ORIGINATOR WEG	DATE 3-31-87
CHECKER JCC	DATE 4-1-87

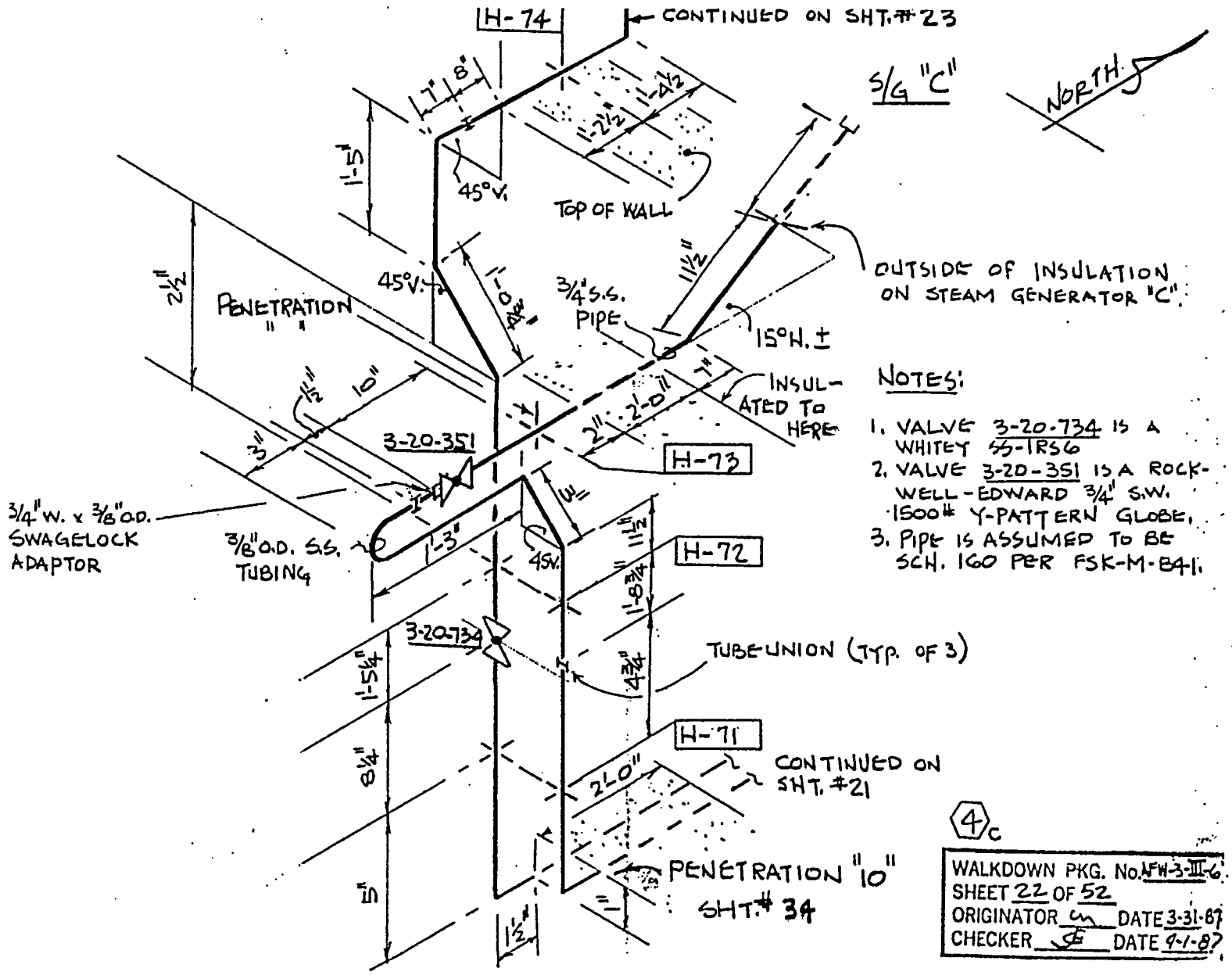

NOTES:

1. VALVE 3-20-734 IS A WHITEY SS-1RS6
2. VALVE 3-20-351 IS A ROCKWELL-EDWARD 3/4" S.W. 1500# Y-PATTERN GLOBE.
3. PIPE IS ASSUMED TO BE SCH. 160 PER FSK-M-841.

4 C

WALKDOWN PKG. No. AFW-3-III-6
SHEET 22 OF 52
ORIGINATOR [illegible] DATE 3-31-87
CHECKER [illegible] DATE 4-1-87

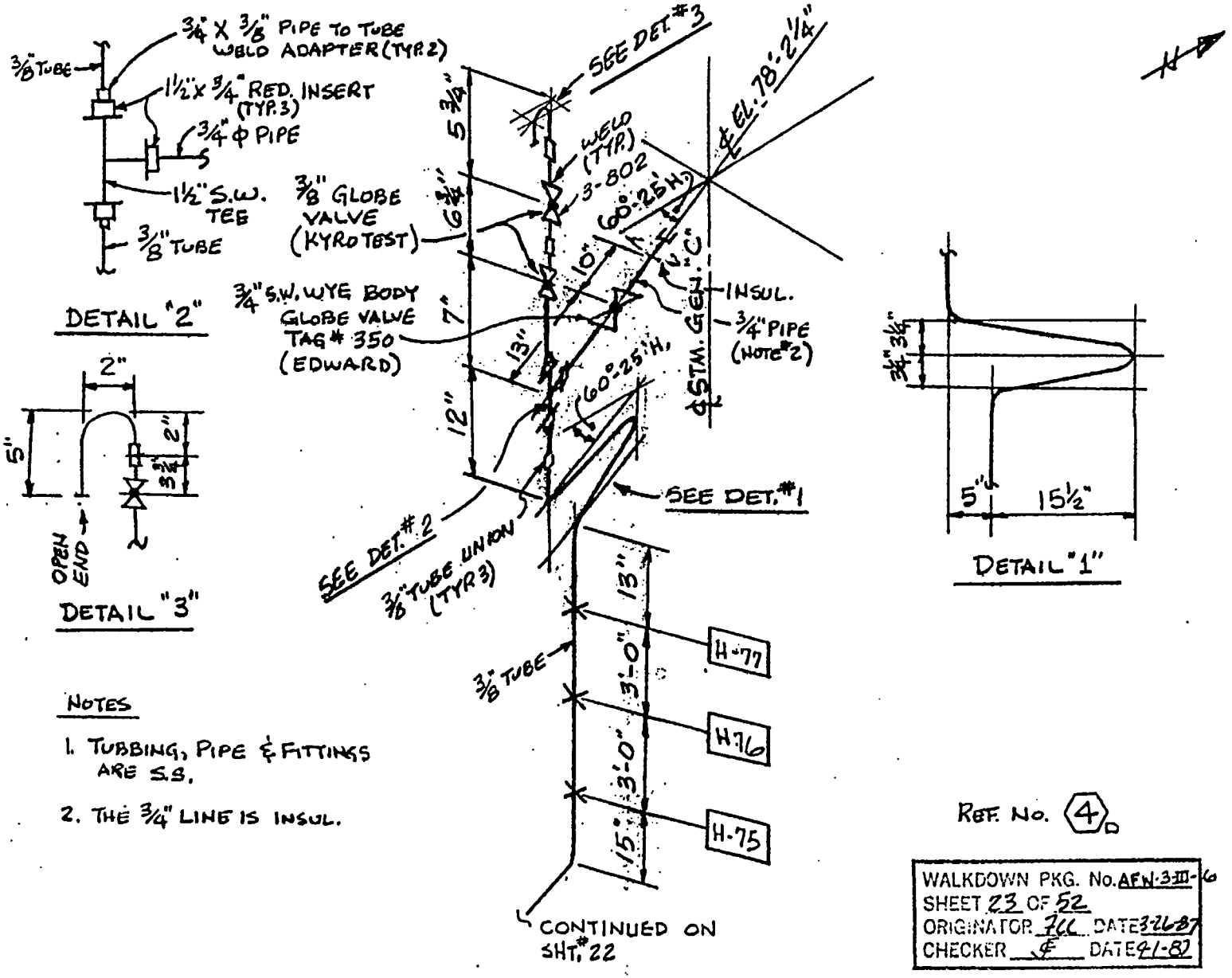

NOTES

1. TUBBING, PIPE & FITTINGS ARE S.S.
2. THE 3/4" LINE IS INSUL.

REF. NO. 4 D

WALKDOWN PKG. No. AFW-3-III-6
SHEET 23 OF 52
ORIGINATOR FCC DATE 3-26-87
CHECKER E DATE 4-1-87

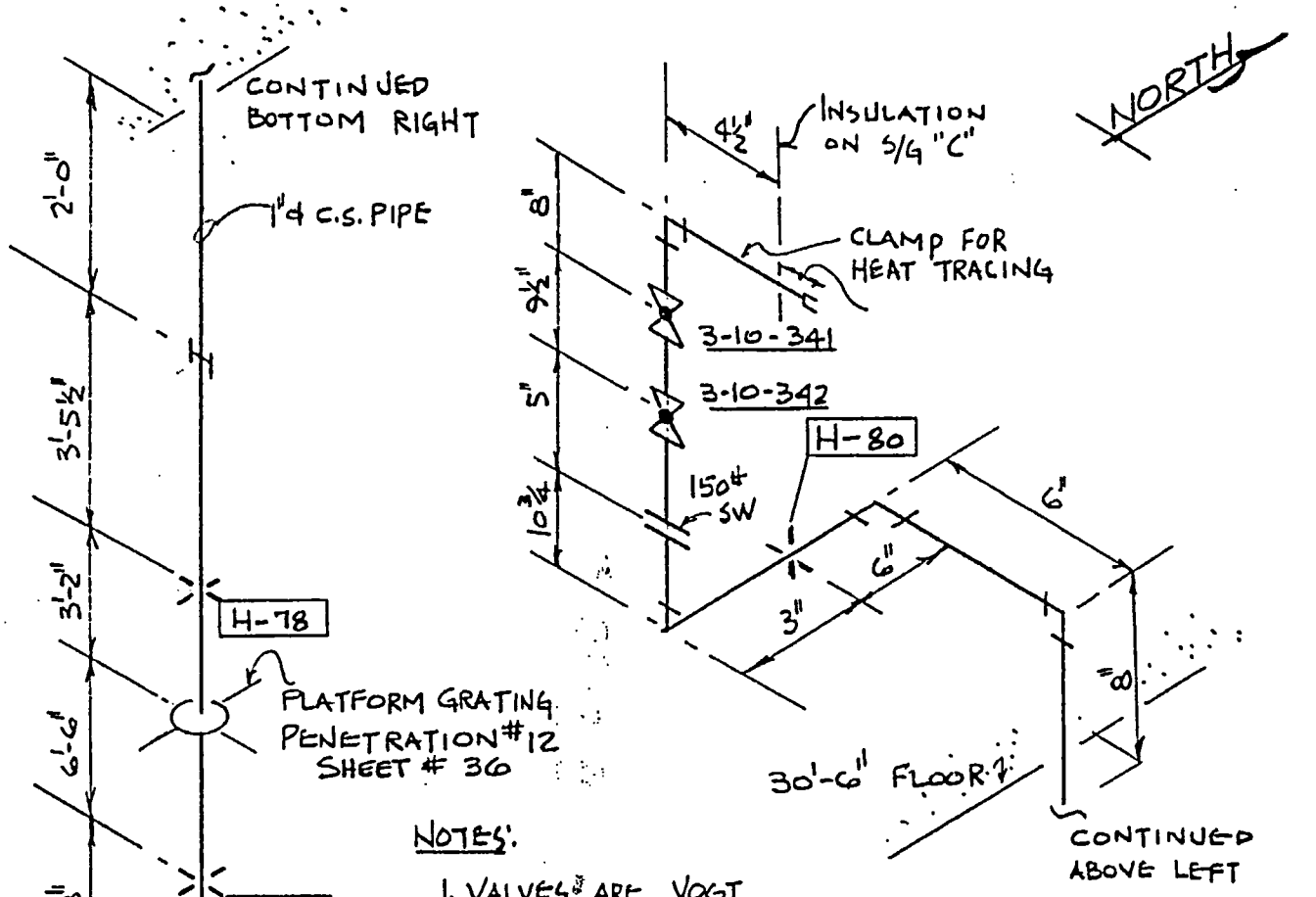

NOTES:

1. VALVES ARE VOGT 1" S.W. 800# GLOBE CAT. # 12145
2. LOCATED IN HIGH RADIATION AREA.

LOCATION: CONTAINMENT S/G "C" CUBICLE

REF. NO. 5

WALKDOWN PKG. NO. AFW-3-III-6
SHEET 24 OF 52
ORIGINATOR [illegible] DATE 4-1-87
CHECKER [illegible] DATE 4-1-87

Attachment 2

CAW-05-2031
Application for Withholding Proprietary Information From Public Disclosure

Westinghouse

Westinghouse Electric Company
Nuclear Services
P.O. Box 355
Pittsburgh, Pennsylvania 15230-0355
USA

U.S. Nuclear Regulatory Commission
Document Control Desk
Washington, DC 20555-0001

Direct tel: (412) 374-4643
Direct fax: (412) 374-4011
e-mail: greshaja@westinghouse.com

Our ref: CAW-05-2031

July 20, 2005

APPLICATION FOR WITHHOLDING PROPRIETARY INFORMATION FROM PUBLIC DISCLOSURE

Subject: "Florida Power & Light Turkey Point Units 3 & 4, Supplemental Licensing Input for Deletion of Steam / Feedwater Flow Mismatch Reactor Trip, WNA-LI-00049-FPL-P, Revision 0, July 2005" (Proprietary)

The proprietary information for which withholding is being requested in the above-referenced report is further identified in Affidavit CAW-05-2031 signed by the owner of the proprietary information, Westinghouse Electric Company LLC. The affidavit, which accompanies this letter, sets forth the basis on which the information may be withheld from public disclosure by the Commission and addresses with specificity the considerations listed in paragraph (b)(4) of 10 CFR Section 2.390 of the Commission's regulations.

Accordingly, this letter authorizes the utilization of the accompanying affidavit by Florida Power & Light.

Correspondence with respect to the proprietary aspects of the application for withholding or the Westinghouse affidavit should reference this letter, CAW-05-2031, and should be addressed to J. A. Gresham, Manager, Regulatory Compliance and Plant Licensing, Westinghouse Electric Company LLC, P.O. Box 355, Pittsburgh, Pennsylvania 15230-0355.

Very truly yours,

J. T. Crane for

J. A. Gresham, Manager
Regulatory Compliance and Plant Licensing

Enclosures

cc: B. Benney
L. Feizollahi

CAW-05-2031

AFFIDAVIT

COMMONWEALTH OF PENNSYLVANIA:

ss

COUNTY OF ALLEGHENY:

Before me, the undersigned authority, personally appeared J. S. Galembush, who, being by me duly sworn according to law, deposes and says that he is authorized to execute this Affidavit on behalf of Westinghouse Electric Company LLC (Westinghouse), and that the averments of fact set forth in this Affidavit are true and correct to the best of his knowledge, information, and belief:

J. S. Galembush, Customer 1st Leader

Sworn to and subscribed
before me this 20th day
of July, 2005

Sharon L. Fiori
Notary Public

Notarial Seal
Sharon L. Fiori, Notary Public
Monroeville Boro, Allegheny County
My Commission Expires January 29, 2007
Member, Pennsylvania Association Of Notaries

(1) I am Customer 1st Leader in Nuclear Services, Westinghouse Electric Company LLC (Westinghouse), and as such, I have been specifically delegated the function of reviewing the proprietary information sought to be withheld from public disclosure in connection with nuclear power plant licensing and rule making proceedings, and am authorized to apply for its withholding on behalf of Westinghouse.

(2) I am making this Affidavit in conformance with the provisions of 10 CFR Section 2.390 of the Commission's regulations and in conjunction with the Westinghouse "Application for Withholding" accompanying this Affidavit.

(3) I have personal knowledge of the criteria and procedures utilized by Westinghouse in designating information as a trade secret, privileged or as confidential commercial or financial information.

(4) Pursuant to the provisions of paragraph (b)(4) of Section 2.390 of the Commission's regulations, the following is furnished for consideration by the Commission in determining whether the information sought to be withheld from public disclosure should be withheld.

(i) The information sought to be withheld from public disclosure is owned and has been held in confidence by Westinghouse.

(ii) The information is of a type customarily held in confidence by Westinghouse and not customarily disclosed to the public. Westinghouse has a rational basis for determining the types of information customarily held in confidence by it and, in that connection, utilizes a system to determine when and whether to hold certain types of information in confidence. The application of that system and the substance of that system constitutes Westinghouse policy and provides the rational basis required.

Under that system, information is held in confidence if it falls in one or more of several types, the release of which might result in the loss of an existing or potential competitive advantage, as follows:

(a) The information reveals the distinguishing aspects of a process (or component, structure, tool, method, etc.) where prevention of its use by any of

Westinghouse's competitors without license from Westinghouse constitutes a competitive economic advantage over other companies.

(b) It consists of supporting data, including test data, relative to a process (or component, structure, tool, method, etc.), the application of which data secures a competitive economic advantage, e.g., by optimization or improved marketability.

(c) Its use by a competitor would reduce his expenditure of resources or improve his competitive position in the design, manufacture, shipment, installation, assurance of quality, or licensing a similar product.

(d) It reveals cost or price information, production capacities, budget levels, or commercial strategies of Westinghouse, its customers or suppliers.

(e) It reveals aspects of past, present, or future Westinghouse or customer funded development plans and programs of potential commercial value to Westinghouse.

(f) It contains patentable ideas, for which patent protection may be desirable.

There are sound policy reasons behind the Westinghouse system which include the following:

(a) The use of such information by Westinghouse gives Westinghouse a competitive advantage over its competitors. It is, therefore, withheld from disclosure to protect the Westinghouse competitive position.

(b) It is information that is marketable in many ways. The extent to which such information is available to competitors diminishes the Westinghouse ability to sell products and services involving the use of the information.

(c) Use by our competitor would put Westinghouse at a competitive disadvantage by reducing his expenditure of resources at our expense.

(d) Each component of proprietary information pertinent to a particular competitive advantage is potentially as valuable as the total competitive advantage. If competitors acquire components of proprietary information, any one component may be the key to the entire puzzle, thereby depriving Westinghouse of a competitive advantage.

(e) Unrestricted disclosure would jeopardize the position of prominence of Westinghouse in the world market, and thereby give a market advantage to the competition of those countries.

(f) The Westinghouse capacity to invest corporate assets in research and development depends upon the success in obtaining and maintaining a competitive advantage.

(iii) The information is being transmitted to the Commission in confidence and, under the provisions of 10 CFR Section 2.390, it is to be received in confidence by the Commission.

(iv) The information sought to be protected is not available in public sources or available information has not been previously employed in the same original manner or method to the best of our knowledge and belief.

(v) The proprietary information sought to be withheld in this submittal is that which is appropriately marked in "Florida Power & Light Turkey Point Units 3 & 4, Supplemental Licensing Input for Deletion of Steam / Feedwater Flow Mismatch Reactor Trip, WNA-LI-00049-FPL-P, Revision 0, July 2005," (Proprietary) being transmitted by the Florida Power & Light Company letter and Application for Withholding Proprietary Information from Public Disclosure, to the Document Control Desk. The proprietary information for Turkey Point Units 3 & 4 is expected to be applicable for other licensee submittals in response to certain NRC requirements for justification of steam/feedwater flow mismatch reactor trip elimination.

This information is part of that which will enable Westinghouse to:

(a) Provide an approved, fault tolerant design.

(b) Provide a design configuration that has been certified by an approved process.

(c) Provide basis information for related accident analyses.

Further this information has substantial commercial value as follows:

(a) Westinghouse plans to sell the use of similar information to its customers for purposes of eliminating the steam/feed flow mismatch reactor trip.

(b) Westinghouse can sell support and defense of steam/feed flow mismatch reactor trip elimination.

(c) The information requested to be withheld reveals the distinguishing aspects of a methodology which was developed by Westinghouse.

Public disclosure of this proprietary information is likely to cause substantial harm to the competitive position of Westinghouse because it would enhance the ability of competitors to provide similar design modifications, bases, and licensing defense services for commercial power reactors without commensurate expenses. Also, public disclosure of the information would enable others to use the information to meet NRC requirements for licensing documentation without purchasing the right to use the information.

The development of the technology described in part by the information is the result of applying the results of many years of experience in an intensive Westinghouse effort and the expenditure of a considerable sum of money.

In order for competitors of Westinghouse to duplicate this information, similar technical programs would have to be performed and a significant manpower effort, having the requisite talent and experience, would have to be expended.

Further the deponent sayeth not.

PROPRIETARY INFORMATION NOTICE

Transmitted herewith are proprietary and/or non-proprietary versions of documents furnished to the NRC in connection with requests for generic and/or plant-specific review and approval.

In order to conform to the requirements of 10 CFR 2.390 of the Commission's regulations concerning the protection of proprietary information so submitted to the NRC, the information which is proprietary in the proprietary versions is contained within brackets, and where the proprietary information has been deleted in the non-proprietary versions, only the brackets remain (the information that was contained within the brackets in the proprietary versions having been deleted). The justification for claiming the information so designated as proprietary is indicated in both versions by means of lower case letters (a) through (f) located as a superscript immediately following the brackets enclosing each item of information being identified as proprietary or in the margin opposite such information. These lower case letters refer to the types of information Westinghouse customarily holds in confidence identified in Sections (4)(ii)(a) through (4)(ii)(f) of the affidavit accompanying this transmittal pursuant to 10 CFR 2.390(b)(1).

COPYRIGHT NOTICE

The reports transmitted herewith each bear a Westinghouse copyright notice. The NRC is permitted to make the number of copies of the information contained in these reports which are necessary for its internal use in connection with generic and plant-specific reviews and approvals as well as the issuance, denial, amendment, transfer, renewal, modification, suspension, revocation, or violation of a license, permit, order, or regulation subject to the requirements of 10 CFR 2.390 regarding restrictions on public disclosure to the extent such information has been identified as proprietary by Westinghouse, copyright protection notwithstanding. With respect to the non-proprietary versions of these reports, the NRC is permitted to make the number of copies beyond those necessary for its internal use which are necessary in order to have one copy available for public viewing in the appropriate docket files in the public document room in Washington, DC and in local public document rooms as may be required by NRC regulations if the number of copies submitted is insufficient for this purpose. Copies made by the NRC must include the copyright notice in all instances and the proprietary notice if the original was identified as proprietary.