DWG. NO. CN-1577-1.11 REV. 4

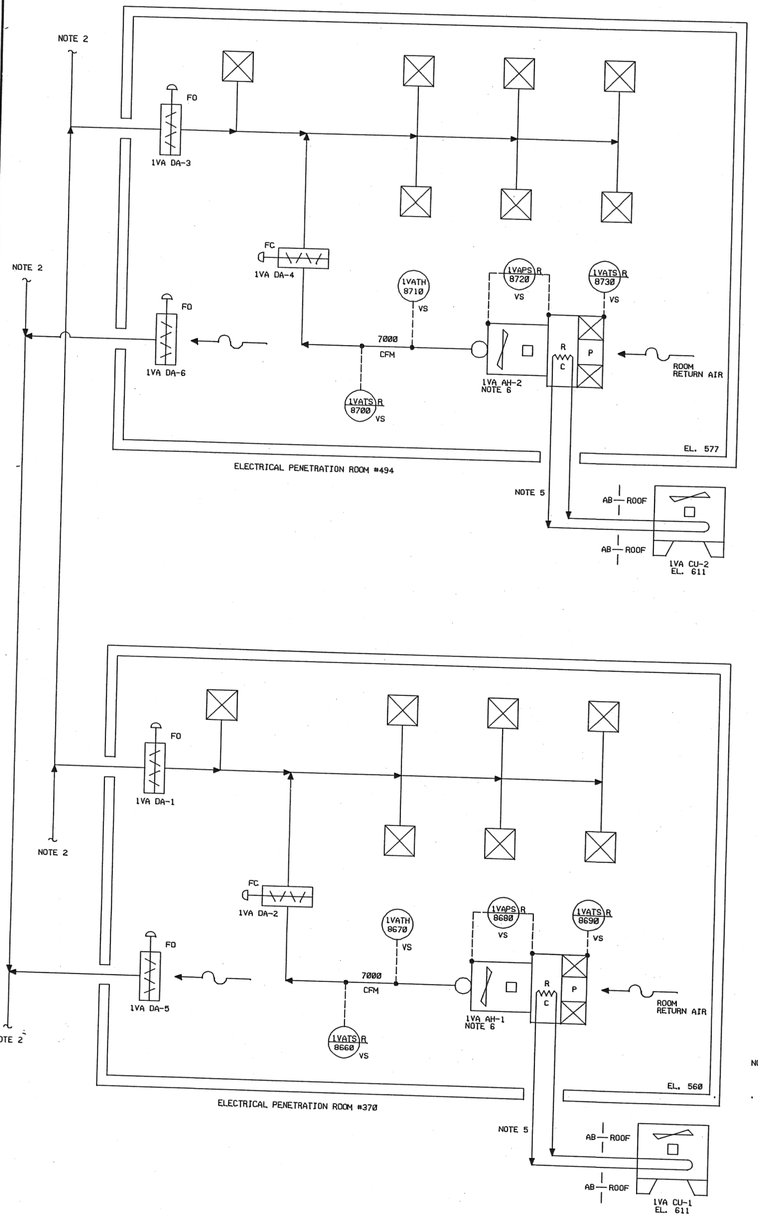

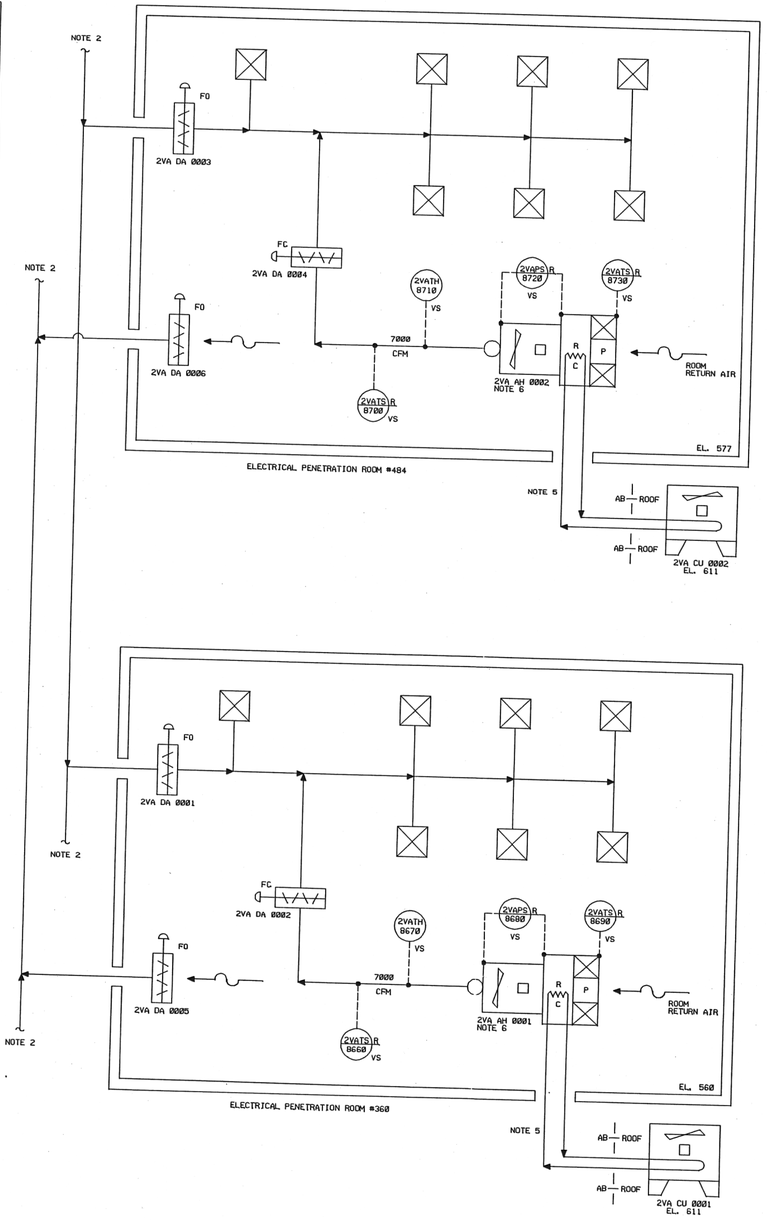

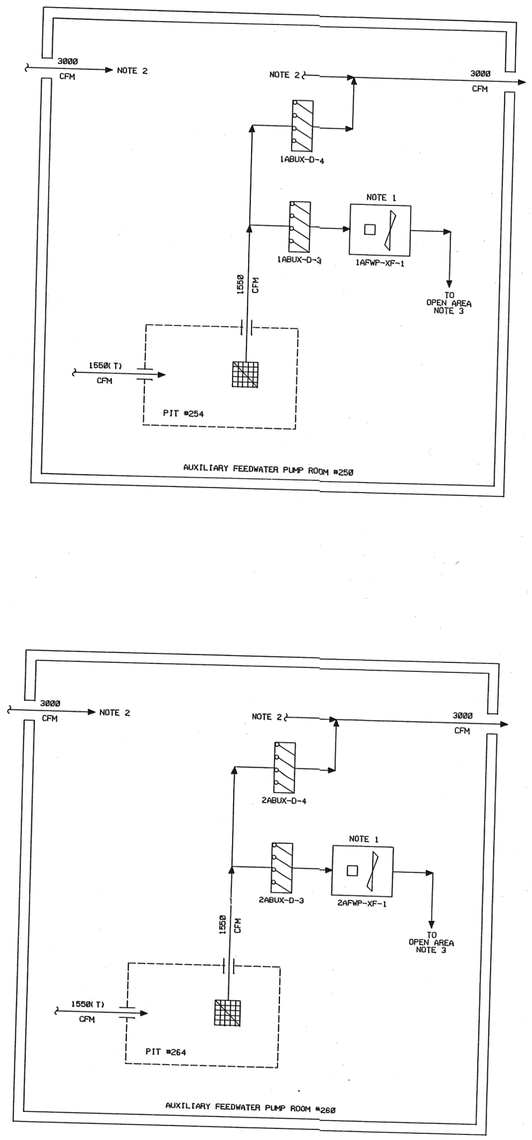

4

NOTES:

1. DESIGNED TO OPERATE WHEN NORMAL SYSTEM VENTILATION IS OFF (1550 CFM FLOW RATE).
2. SEE DWG. CN-1577-1.11.
3. WIRE MESH ON FAN OUTLET.
4. (T)= TRANSFER AIR.
5. REFRIGERANT TUBING BY HVAC CONTRACTOR.
6. 1VA AH-1 & 2; 2VA AH-1 & 2 WILL REQUIRE MINIMUM OF A 4" LOOP SEAL AND TIE INTO SYSTEM WL DRAINS.

Certified as of 01/01/01 at 12:00AM

MOD IN PROGRESS
MOD. 0.000 REV.
Ms

NO.	REVISIONS	DRN	DATE	CHKD	DATE	APPR	DATE
4	REV PER CE-71605 IMP. DATE 4-25-02	VDC 02/1		CLI 02/1		PFB 02/7	
ORIG.	ORIGINAL DRAWING RETIRED	VDC 02/1					

INSPECTED: CIVIL | ELEC. | MECH.

REK DSA ARL

DUKE POWER COMPANY
CATAWBA NUCLEAR STATION UNITS 1&2

FLOW DIAGRAM OF
AUXILIARY BUILDING VENTILATION
SYSTEM (VA)
MISCELLANEOUS ROOMS

DESIGNER RE CONLEY DATE 5-4-02
DRAWN DW MONROE DATE 5-4-02
CHECKED PM WHITE DATE 5-4-02
SCALE
INSP. WAIVED DATE
INSP. DW MURDOCK DATE 5-7-02
APPR. WA SMITH DATE 5-14-02

DWG. NO. CN-1577-1.11 REV. 4

ERN: CN000HQ9

D-12