release

COMBUSTION ENGINEERING

File Dkt = 70-0036
RIII -

Janaury 18, 1989
LD-89-004

R

Docket No. 71-6294
Package Identification No. USA/6294/AF
Package Model No. UNC-2901

Mr. Charles E. MacDonald, Chief
Transportation Branch
Division of Safeguards and Transportation
Attn: Document Control Desk
U. S. Nuclear Regulatory Commission
Washington, D.C. 20555

Subject: Certificate of Compliance No. 6294 Amendment Request

Dear Mr. MacDonald:

Enclosed is Combustion Engineering's submittal of an amendment request for Certificate of Compliance No. 6294 for shipping container Model Number UNC-2901. Ten (10) copies of the Enclosure are provided for your use.

The enclosed amendment application request incorporates an increase in the maximum allowable enrichment that can be transported by the UNC-2901 shipping container from 4.1 to 5.0 wt. % U235. This application supersedes, in its entirety, the June 20, 1980 application and the amendments dated September 29, 1981, October 14, 1987 and October 20, 1987. Since the application has been completely reformatted, there is no longer a page to page correspondence with the old Certificate of Compliance Application. As such, all page revisions have been reset to zero (0). To assist you in your review, however, technical changes are indicated by vertical lines in the margin.

In order to meet our current commitments, it is requested that a revised Certificate of Compliance be issued by April 1, 1989. To facilitate your review of this application, we would be pleased to meet with you at your convenience to explain the changes and respond to any questions that you may have.

H-70 JAN 24 1989

Power Systems
Combustion Engineering, Inc.

1000 Prospect Hill Road
Post Office Box 500
Windsor, Connecticut 06095-0500

(203) 688-1911
Telex: 99297

Remitted herewith is the application fee of $150.00 pursuant to the requirements of 10 CFR 170.31.

If I can be of further assistance on this matter, please do not hesitate to call me or Mr. C. M. Molnar of my staff at (203)-285-5205.

Very truly yours,

COMBUSTION ENGINEERING, INC.

A. E. Scherer
Director
Nuclear Licensing

AES:jeb

Enclosures: 1) UNC-2901 Certificate of Compliance Application
2) Check No. 215045

cc: R. F. Burnett (NRC) w/o enclosure
R. E. Cunningham (NRC) w/o enclosure
G. M. France (NRC-Region III)
G. E. Jackson (NRC) w/o enclosure
J. Roth (NRC-Region I)

APPLICATION FOR USE OF SHIPPING CONTAINER MODEL NO. UNC-2901 FOR THE TRANSPORT OF SPECIAL NUCLEAR MATERIAL

TABLE OF CONTENTS

	Page
6.2 Package Fuel Loading	6-3
6.3 Model Specification	6-2
6.3.1 Description of Calculational Model	6-2
6.4 Criticality Calculation	6-4
6.4.1 Calculational Method	6-4
6.4.2 Criticality Results	6-4
6.5 Code Validation	6-5
6.5.1 Homogenous Material	6-5
6.5.2 Heterogenous Material	6-5
6.5.3 Computer Codes	6-6
6.5.4 Cross Section Generation	6-6
6.5.5 KENO IV Models	6-6
6.5.6 Conclusion	6-7
6.6 References	6-7
7. OPERATING PROCEDURES	7-1
7.1 Procedures for Loading the Package	7-1
7.2 Procedures for Unloading the Package	7-2
8. ACCEPTANCE TESTS AND MAINTENANCE PROGRAM	8-1

1.2.2 Operational Features

The UNC 2901 shipping container is of relatively simple design, and does not incorporate cooling systems, shielding, etc.

1.2.3 Contents of Packaging

1.2.3.1 Pellets or Rejected Pellets

Maximum Enrichment 5.0 wt.%
Type Material: Sintered (high fired) uranium oxide pellets.
Maximum quantity per container:

a) Maximum net weight:
Maximum net weight of pellets: 320 pounds
Pellets and packaging material (contents of inner container) 427 pounds.

b) Gross Weight:
Gross weight of the container as assembled for shipment shall not exceed 660 pounds.

1.2.3.2 Dry Compounds or Reject Pellets

Maximum enrichment 5.0 wt.%
Type Material: Uranium Oxide powder or reject pellets.

a) Maximum net weight (powder or rejected pellets): 154 pounds

b) Gross Weight
Gross weight of container as assembled for shipment shall not exceed 457 pounds.

1.3 Appendix

Details of construction and assembly are shown on drawings:

D 5007-8086, Rev. 5, S.W.O.P.P. Upgrade UNC 2901 Shipping Drum for UO_2 Power & Pellets Assembly & Details
B 5007-8112, Rev. 1, Suggested Assembly of 2901 Plywood Insert
NFM-E-4546 Rev. 00, Sheets 1 and 2, Cage Assembly - 2901 Drums
NPM-C-3389 Rev. 00 or Rev. 03 UO_2 Inner Container
NFM-D-4266 Rev. 02, Pellet Shipping Package
NFM-B-4552 Rev. 01, UO_2 Power Shipping Container ASSY-2901
NFM-D-4263 Rev. 02, Pellet Tray Holder
NFM-D-4540, UNC 2901 Shipping Drum

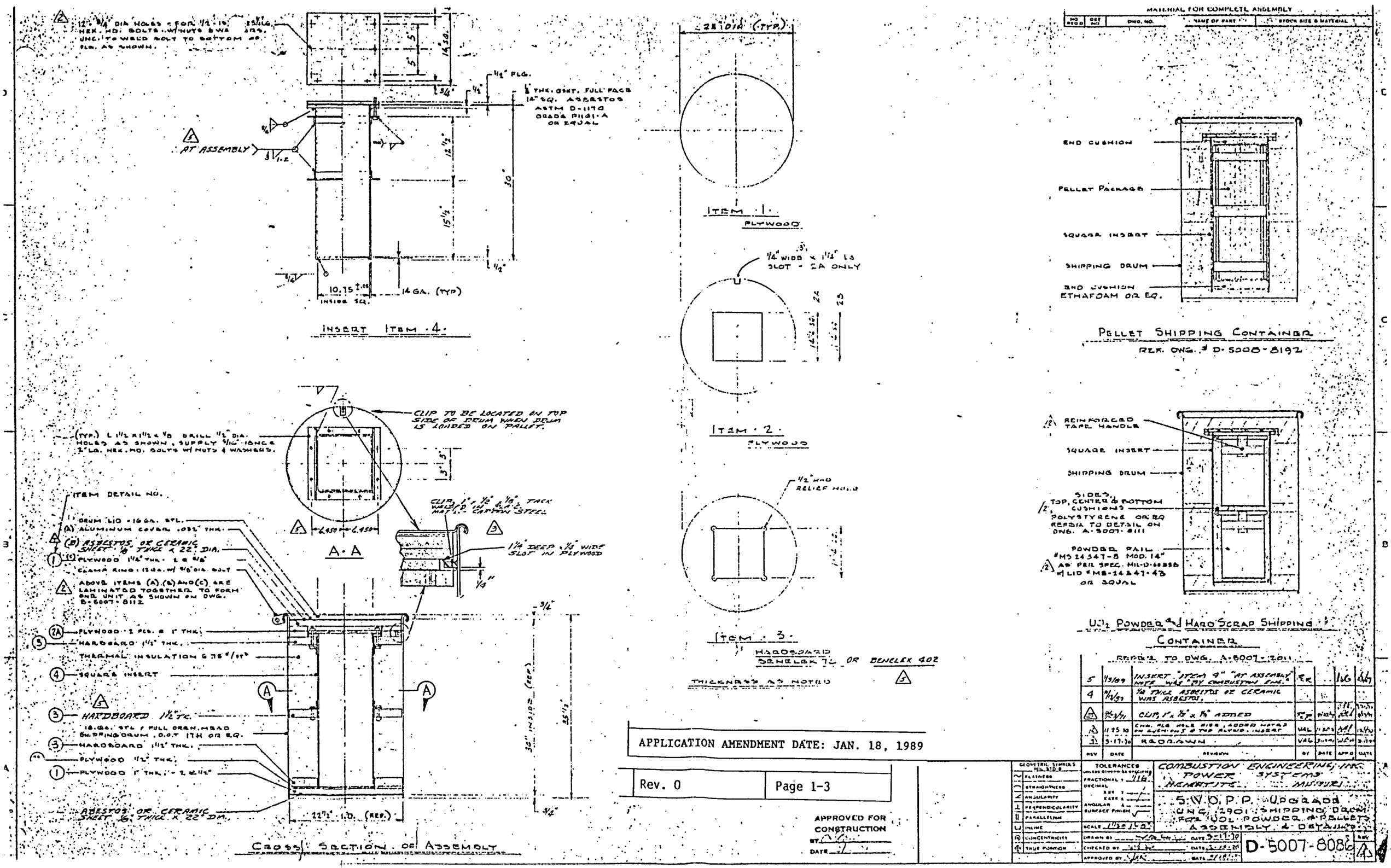

APPLICATION AMENDMENT DATE: JAN. 18, 1989

Rev. 0	Page 1-3

APPROVED FOR CONSTRUCTION
BY
DATE

MATERIAL FOR COMPLETE ASSEMBLY

ITEM NO.	PART DESCRIPTION	NO. REQ'D	SOURCE

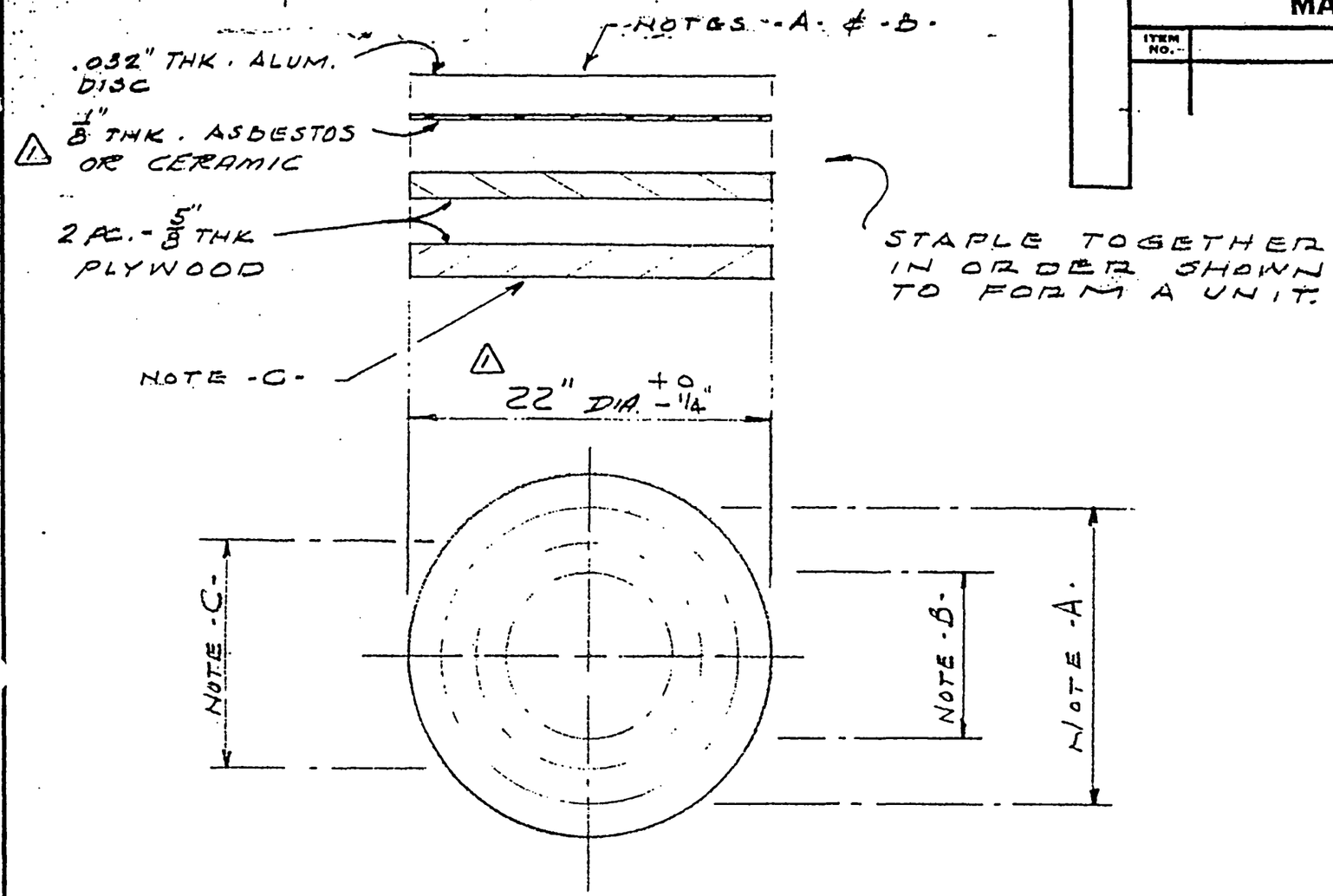

NOTE A.. USING A 18" CIRCLE, PLACE ON 4" CTRS. 1 3/16" LG. STAPLES.

NOTE B.. USING A 10" CIRCLE, PLACE ON 3" CTRS. 1 3/16" LG. STAPLES.

NOTE C.. USING A 14" CIRCLE PLACE 4 @ 90° - 1 3/16" LG. STAPLES.

REV.	BY	DATE	APP'D.	DATE	JOB NO.	DESCRIPTION	W.O. NO.
1	RLR	10/13/87				1/8" TK. ASB. OR CERAMIC WAS ASBESTOS - DIA'S WERE 21 3/4	

TOLERANCES UNLESS OTHERWISE SPECIFIED
FRACTIONAL ± 1/8
DECIMAL ±
ANGULAR ±
FINISH SYMBOL ASA ST'D

COMBUSTION ENGINEERING, INC.
POWER SYSTEMS
HEMATITE MISSOURI

SUGGESTED ASSEMBLY OF 2901 PLYWOOD INSERT

SCALE 1 1/2" = 1'-0"	DWN. BY YAL	APP'D. [signature]	B-5007-8112	REV. 1
DATE 11-24-70	CHK'D BY [signature]	APP'D.		

BILL OF MATERIALS
QUANTITIES ARE FOR

GROUP NO. & QUANTITY 8	5	4	3	2	1	ITEM NO.	NAME	PIECE NO.	MATERIAL	REMARKS
					X	1	LIFTING CAGE ASSEMBLY	NFM-E-4546-01		
				X	1	2	CAGE LIFTER WELDMENT	NFM-E-4546-02		
				1		3	BAR	NFM-E-4546-03		1.50 X 1.50 5.75 LG
				4		4	BAR	NFM-E-4546-04		1.00 X 1.00 X 5.50 LG
				4		5	BAR	NFM-E-4546-05		.75 X .75
				1		6	LUG	NFM-E-4546-06		ø .3125
			X		1	7	CAGE WELDMENT	NFM-E-4546-07		
			1			8	PLATE	NFM-E-4546-08		.25 THK
			4			9	PLATE	NFM-E-4546-09		2.00 X .25 X 28.0 LG
					1	10	HOLD DOWN PLATE	NFM-E-4546-10		.375 THK
					1	11	PLATE	NFM-E-4546-11		.25 THK
					1	12	HANDLE	NFM-E-4546-12		ø .4375
					4	13	EYE BOLT-SHOULDER PATTERN	NFM-E-4546-13	MFG. SPECIFICATION	McMASTER-CARR NO. 3037141
					4	14	WIRE ROPE SLING - TYPE 2	NFM-E-4546-14		McMASTER-CARR NO. 3145774 .75#
					4	15	LOCKWASHER	NFM-E-4546-15	S.S.TL	.750
					4	16	HEX JAM NUT	NFM-E-4546-16	S.S.TL	.750-10 UNC-2B
					4	17	SPRING HOOK - 750#	NFM-E-4546-17	FORGED STEEL	McMASTER-CARR NO. 3844111
					8	18	LINK	NFM-E-4546-18	FORGED STEEL	McMASTER CARR NO. 3576115

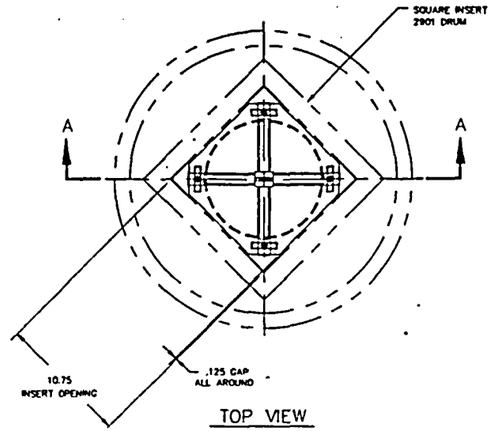

TOP VIEW

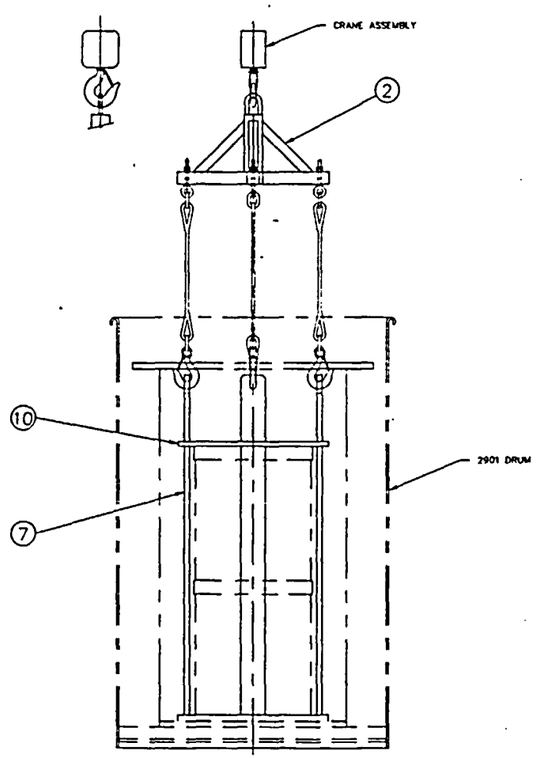

1 LIFTING CAGE ASSEMBLY

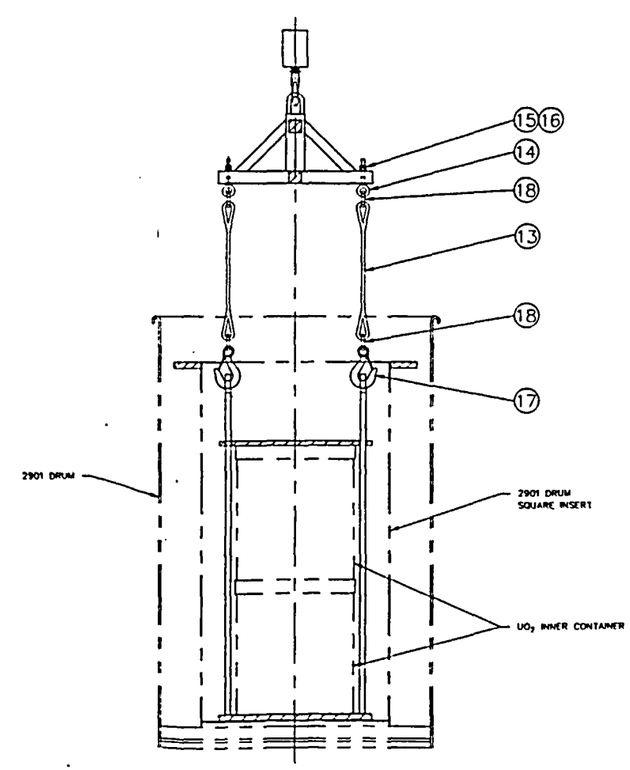

SECTION A–A

NFM-E-4546
SHEET 1 OF 2
00

APPLICATION AMENDMENT DATE: JAN. 18, 1989	Rev. 0	Page 1-5

REV	DESCRIPTION	ZA	TV	BA	DR
V					

UNLESS OTHERWISE SPECIFIED
DIMENSIONING & TOLERANCING PER ANSI Y14.5M-1982
DIMENSIONS APPLY AT 68°F(20°C)
ALL DIMENSIONS ARE IN INCHES
TOLERANCES
ONE PLACE DECIMAL ± .1
TWO PLACE DECIMAL ± .02
THREE PLACE DECIMAL ± .005
BREAK CORNERS .015 APPROX. R OR CHAM - FILLETS .010 TO .031 R
FINISH (√) AA125 MICRO IN
ANGLES ± 0° 30' CHAM ± 5°
DO NOT SCALE DRAWING

COMBUSTION ENGINEERING
NUCLEAR POWER SYSTEMS
CUSTOMER
NUCLEAR FUEL MANUFACTURING
NEXT ASSY
SUPERSEDES
JOB NO. 779218
COMPONENT CODE
SCALE 1/4

DRAWN BY: D. FOUNTAIN 9/13/88
CHECKED
APPROVALS
TITLE
CAGE ASSEMBLY-- 2901 DRUMS
DWG NO. NFM-E-4546 00
SHEET 1 OF 1 REV.
D. FOUNTAIN AUTOCAD R12

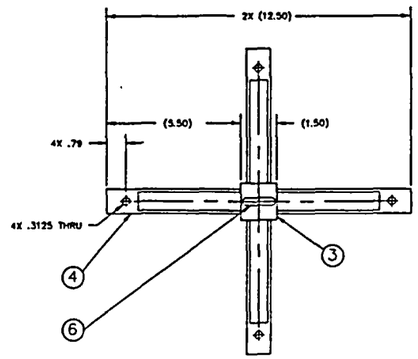

TOP VIEW

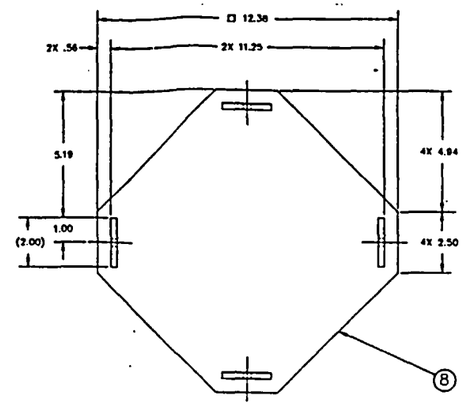

TOP VIEW

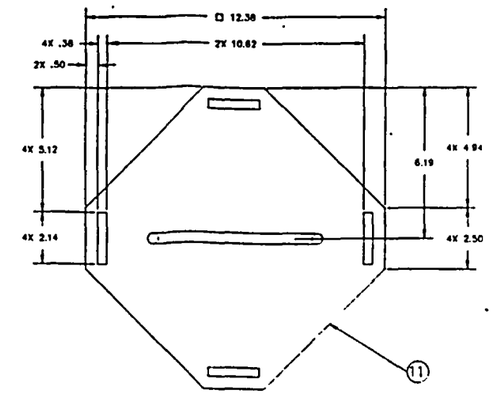

TOP VIEW

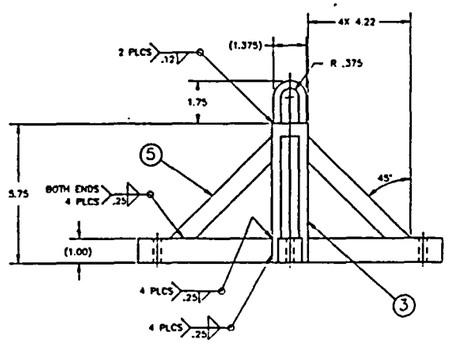

② CAGE LIFTER WELDMENT

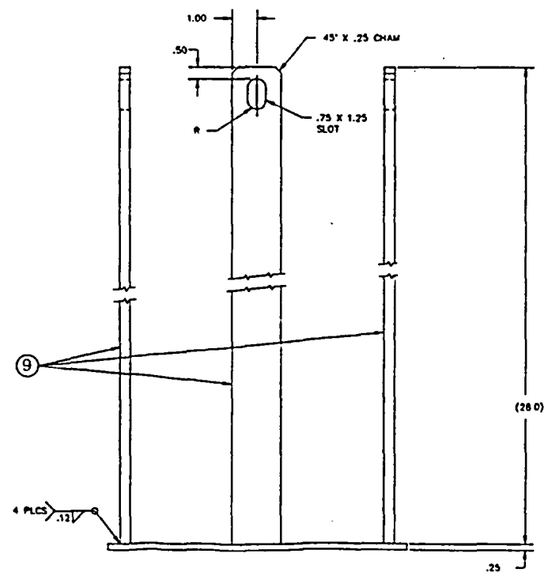

⑦ CAGE WELDMENT

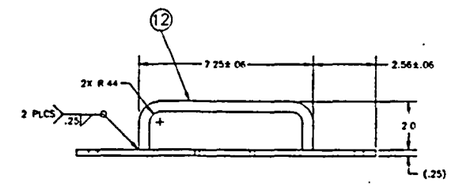

⑩ HOLD DOWN COVER

NFM-E-4546
SHEET 2 OF 2 00

APPLICATION AMENDMENT DATE: JAN. 18, 1989	Rev. 0	Page 1-6

REV	DESCRIPTION				

UNLESS OTHERWISE SPECIFIED
DIMENSIONING & TOLERANCING PER ANSI Y14.5M-1982
DIMENSIONS APPLY AT 68°(20°C)
ALL DIMENSIONS ARE IN INCHES
TOLERANCES
ONE PLACE DECIMAL ± .1
TWO PLACE DECIMAL ± .02
THREE PLACE DECIMAL ± .005
BREAK CORNERS .016 APPROX. R OR CHAM - FILLETS .016 TO .031 R
FINISH (√) AA125 MICRO IN
ANGLES ± 0° 30' CHAM ± 5°
DO NOT SCALE DRAWING

COMBUSTION ENGINEERING
NUCLEAR POWER SYSTEMS
CUSTOMER: NUCLEAR FUEL MANUFACTURING
NEXT ASSY | SUPERSEDES
JOB NO. 776216 | COMPONENT CODE | SCALE 1/2

DRAWN BY D. FOUNTAIN 6/17/88
CHECKED
APPROVALS
TITLE: CAGE ASSEMBLY-2901 DRUMS
DWG NO. NFM-E-4546 00
SHEET 2 OF 2 REV
D. FOUNTAIN 6-13-88 AUTOCAD FILE NFM-E-4546

7 6 5 4 3 2

BILL OF MATERIALS QUANTITIES ARE FOR										
GROUP NO. & QUANTITY						ITEM NO.	NAME	PIECE NO.	MATERIAL	REMARKS
6	5	4	3	2	1					
					X	1	UO_2 INNER CONTAINER	NPM-C-3389-1	—	—
					1	2	LID	-2	304 SST	18 GA
					1	3	BODY	-3	304 SST	18 GA

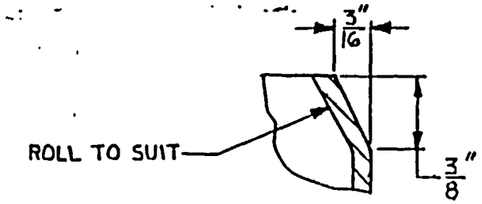

DET-A
SCALE: 2/1

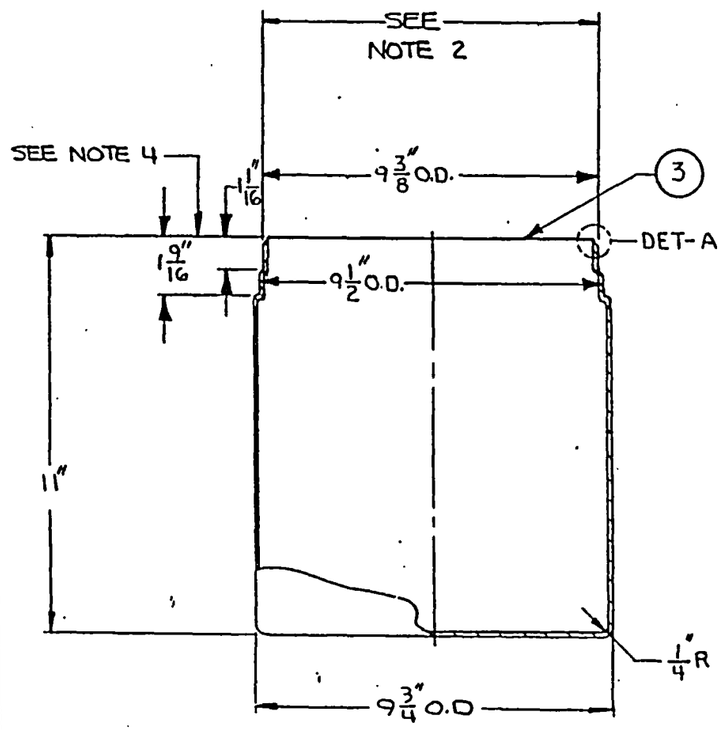

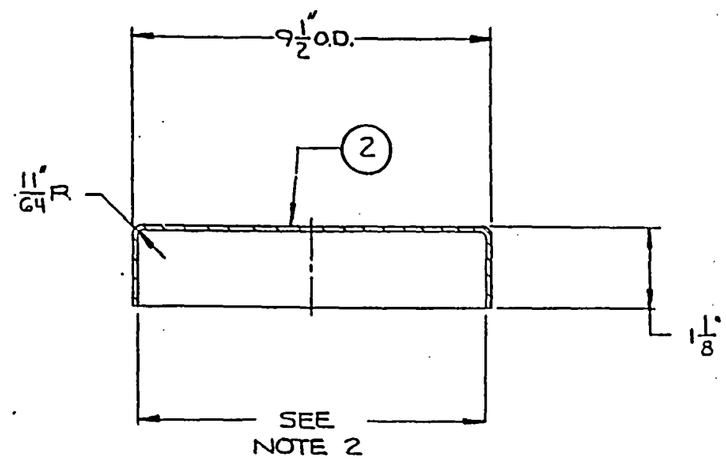

4) OVERALL ASSEMBLED HEIGHT OF CAN AND BODY TO BE 11" ± 1/8"

3) OFFSET IN TO BE USED AS STOP FOR CONTAINER LID

2) CONTAINER LID TO BE SLIDING FIT OVER CONTAINER BODY

1) CONTAINER BODY AND LID MUST BE FREE OF BURR'S, SHARP NICKS AND SHARP EDGES

NPM-C-3389
01

APPLICATION AMENDMENT DATE: JAN. 18, 1989	Rev. 0	Page 1-7

CONTRACT NO. 7499-776043

REV.	DESCRIPTION	BY & DATE	CHK. & DATE	ENG. APPD	PROJ. APPD
01	DRAWING GENERALLY REVISED PER DRAFTING REQUEST NFM-316	3-22-79	3-22-79	3-22-79	

UNLESS OTHERWISE SPECIFIED			
DIMENSIONS	UNDER 6	6-18	OVER 18
DECIMAL DIMS.	±.005	±.005	±.010
FRACTIONAL DIMS.	±1/64	±1/32	±1/16
FINISH (√)-AA-125 MICRO IN.		ANGLES ±1/2°	
THREADS-UNIFIED CL-2A-2B		CHAMFER ±5°	
BREAK CORNERS-1/64 MAX. RAD. OR CHAMFER			
FILLETS-1/64 TO 1/32 RADIUS			
DIMENSION IN INCHES BASED ON 68°F (20°C)			

		DATE
DRAWN BY:	J. Babek	6-20-74
CHECKER:	J.S.B.	6-24-74
APPROVAL:	[illegible]	6-24-74

SCALE: N.T.S. DO NOT SCALE DWG.

NUCLEAR PRODUCTS MANUFACTURING WINDSOR

NEXT ASSY:
SUPERSEDES:
COMPONENT CODE NO:

COMBUSTION DIVISION

UO_2 INNER CONTAINER

NPM-C-3389 | 01
SHEET OF REV.

8 7 6 5 4 3 2 1

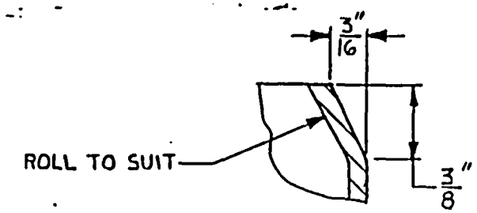

DET-A
SCALE: 2/1

BILL OF MATERIALS
QUANTITIES ARE FOR

GROUP NO. & QUANTITY 6	5	4	3	2	1	ITEM NO.	NAME	PIECE NO.	MATERIAL	REMARKS
					X	1	UO_2 INNER CONTAINER	NPM-C-3389-1		
					1	2	LID	-2	304 SST	18 GA
					1	3	BODY	-3	304 SST	18 GA
					1	4	GASKET	-4	NEOPRENE	
					AR	5	ADHESIVE	-5	76 SPRAY ADHESIVE	3M COMPANY

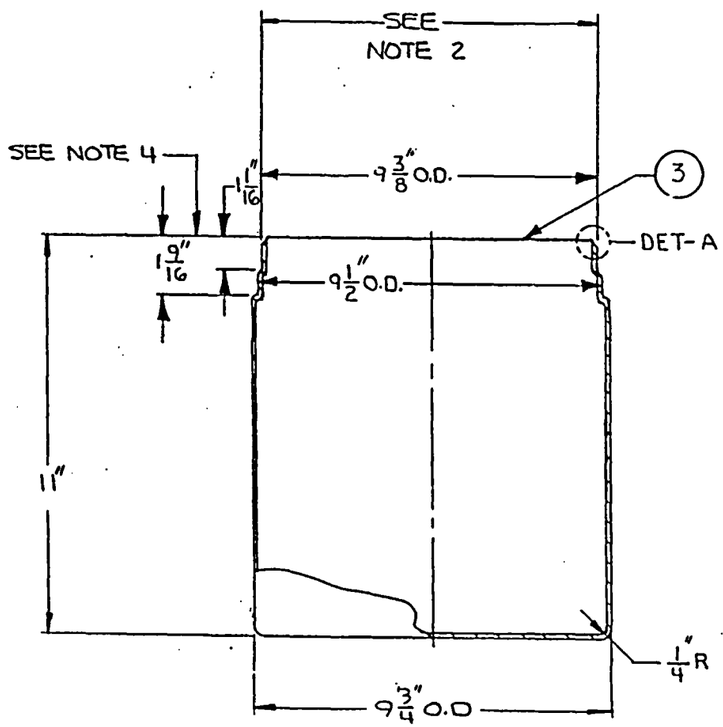

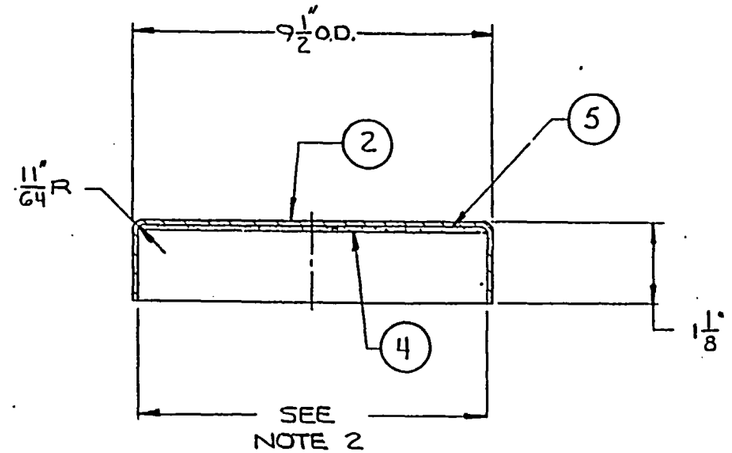

4) OVERALL ASSEMBLED HEIGHT OF CAN AND BODY TO BE 11" ± 1/8

3) OFFSET IN TO BE USED AS STOP FOR CONTAINER LID

2) CONTAINER LID TO BE SLIDING FIT OVER CONTAINER BODY

1) CONTAINER BODY AND LID MUST BE FREE OF BURR'S, SHARP NICKS AND SHARP EDGES

NPM-C-3389
03

APPLICATION AMENDMENT DATE: JAN. 18, 1989 | Rev. 0 | Page 1-8

REV.	DESCRIPTION	BY & DATE	CHK. & DATE	ENG. APPD	PROJ. APPD
01	DRAWING GENERALLY REVISED PER DRAFTING REQUEST NFM-316	3-22-79	3-22-79		
02	ADDED ITEMS 4 & 5 PER DRAFTING REQUEST NFM-51	1-30-81			
03	BM: ITEM 5 WAS CEMENT PER REV REQ NO. 7499-24				

UNLESS OTHERWISE SPECIFIED

DIMENSIONS	UNDER 6	6-18	OVER 18
DECIMAL DIMS.	±.005	±.005	±.010
FRACTIONAL DIMS.	±1/64	±1/32	±1/16
FINISH (√)-AA-125 MICRO IN.		ANGLES ±1/2°	
THREADS-UNIFIED CL-2A-2B		CHAMFER ±5°	

BREAK CORNERS-1/64 MAX. RAD. OR CHAMFER
FILLETS-1/64 TO 1/32 RADIUS
DIMENSION IN INCHES BASED ON 68°F (20°C)

DRAWN BY: J. Babek 6-20-74
CHECKER: J.J.B. 6-24-74
APPROVALS: T.N. [illegible] 6-24-74
DATE

SCALE: N.T.S. | DO NOT SCALE D'W G.

NUCLEAR PRODUCTS MANUFACTURING WINDSOR

NEXT ASSY:
SUPERSEDES:
COMPONENT CODE NO:

CONTRACT NO. 7499-776043

COMBUSTION DIVISION

UO_2 INNER CONTAINER

NPM-C-3389 | 03
SHEET OF REV.

BRUNING 44-132 14597

8 7 6 5 4 3 2 1

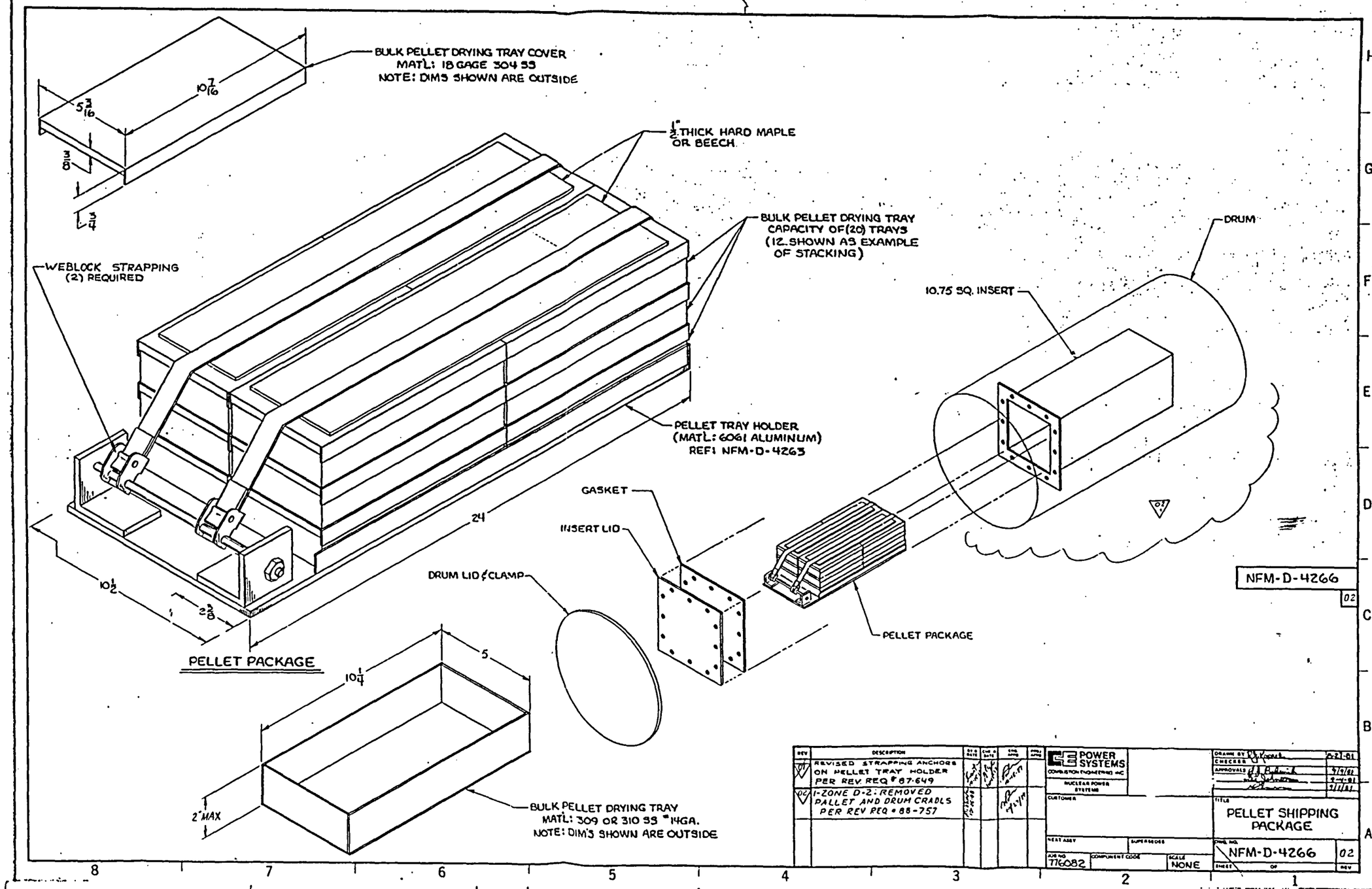
BULK PELLET DRYING TRAY COVER
MATL: 18 GAGE 304 SS
NOTE: DIMS SHOWN ARE OUTSIDE
10 7/16
5 3/16
1 3/8
1 3/4
1/2" THICK HARD MAPLE OR BEECH
BULK PELLET DRYING TRAY CAPACITY OF (20) TRAYS (12 SHOWN AS EXAMPLE OF STACKING)
DRUM
WEBLOCK STRAPPING (2) REQUIRED
10.75 SQ. INSERT
PELLET TRAY HOLDER (MATL: 6061 ALUMINUM) REF: NFM-D-4263
GASKET
INSERT LID
24
10 1/2
2 3/8
DRUM LID & CLAMP
PELLET PACKAGE
PELLET PACKAGE
10 1/4
5
2" MAX
BULK PELLET DRYING TRAY
MATL: 309 OR 310 SS #14GA.
NOTE: DIM'S SHOWN ARE OUTSIDE
NFM-D-4266
02
REV
DESCRIPTION
REVISED STRAPPING ANCHORS ON PELLET TRAY HOLDER PER REV REQ # 87-649
01 1-ZONE D-2: REMOVED PALLET AND DRUM CRADLS PER REV REQ # 88-757
POWER SYSTEMS
COMBUSTION ENGINEERING INC
NUCLEAR POWER SYSTEMS
CUSTOMER
NEXT ASSY
SUPERSEDES
JOB NO 776082
COMPONENT CODE
SCALE NONE
DRAWN BY
CHECKED
APPROVALS
TITLE
PELLET SHIPPING PACKAGE
DWG NO NFM-D-4266
02
SHEET OF
REV
8 7 6 5 4 3 2 1
A B C D E F G H

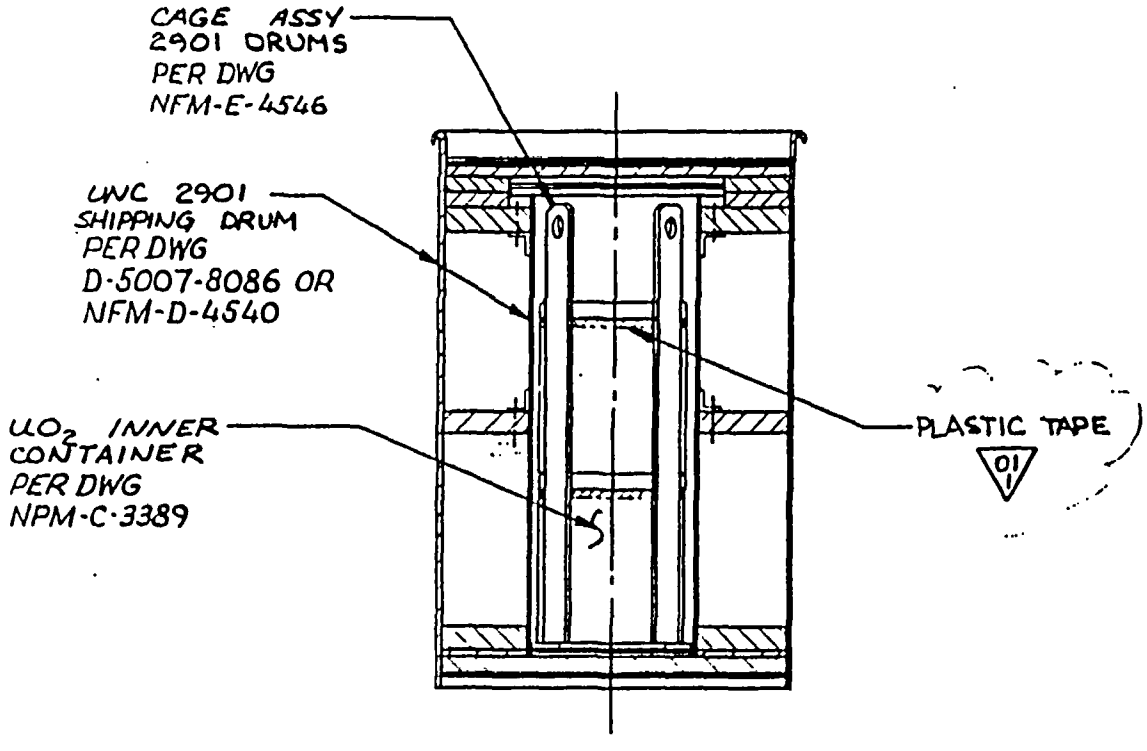

REV.	DESCRIPTION	BY DATE	CHK. DATE	ENG. DATE	PROJ. DATE	REV.	DESCRIPTION	BY DATE	CHK. DATE	ENG. DATE	PROJ. DATE
						01	1- CALLOUT WAS 'PLASTIC TAPE TO HOLD LID TO CONT. PER REV REQ 88- 842	11-9-88		11-10-88	

POWER SYSTEMS
COMBUSTION ENGINEERING, INC
NUCLEAR POWER SYSTEMS

CUSTOMER

JOB NO. 776219

COMPONENT CODE

DRAWN BY RAYNO 11-9-88
CHECKER
APPROVALS 11-10-88

TITLE UO_2 POWDER SHIPPING CONTAINER ASSY-2901

DWG. NO. NFM-B-4552 REV. 01

SHEET 1 OF 1

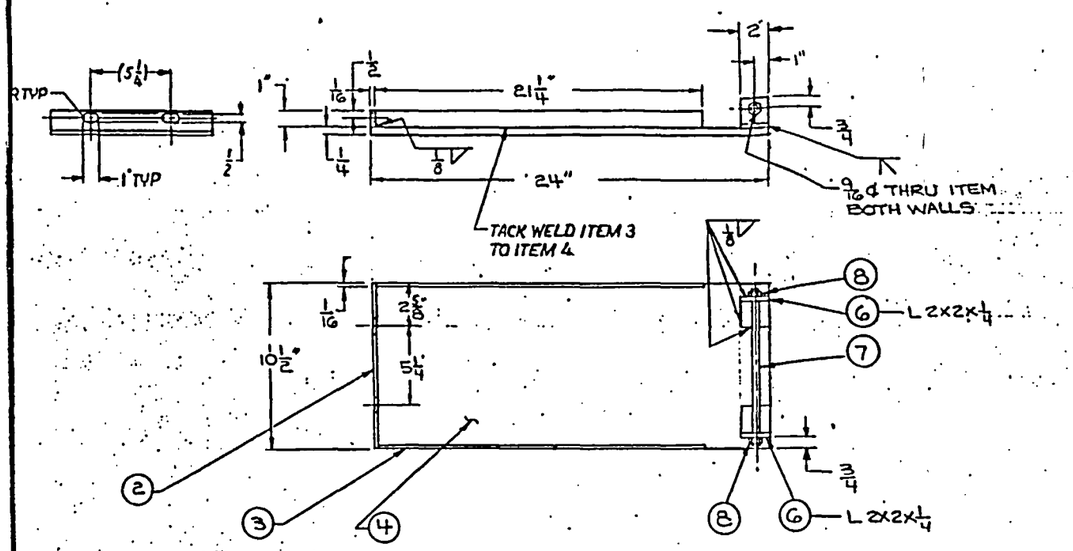

① PELLET TRAY HOLDER
SCALE: 1/4

BILL OF MATERIALS
QUANTITIES ARE FOR

GROUP NO. & QUANTITY 6	5	4	3	2	1	ITEM NO.	NAME	PIECE NO.	MATERIAL	REMARKS
					X	1	PELLET TRAY HOLDER	NFM-D-4263-1	6061	ALUM.
					1	2	END RAIL	NFM-D-4263-2	6061	ALUM.
					2	3	SIDE RAIL	NFM-D-4263-3	6061	ALUM.
					1	4	BASE	NFM-D-4263-4	6061	ALUM.
						5				
					2	6	ANGLE	NFM-D-4263-6	6061 ALUM	L2x2x1/4x2LG
					1	7	THREADED ROD	NFM-D-4263-7	C.S	1/2-13UNC-2AX10"LG
					2	8	HEX HD NUT	NFM-D-4263-8	C.S	1/2-13UNC-2B

NFM-D-4263
02

REV	DESCRIPTION	BY & DATE	CHK. & DATE	ENG. APPD	PROJ. APPD
01	1-BM & FACE OF DWG DELETED ITEM 5 & ADDED ITEMS 6,7 & 8 & RELATED DIMS PER REQ REQ # 87-650	[illegible]	[illegible]	[illegible]	
02	1-CHGD 1/2 ϕ HOLE TO 1/2 W x 1 LG SLOTS [2-WELDS WERE 1/16] 3-ADDED TACK WELD NOTE PER REV REQ 88-799	[illegible]		[illegible]	

UNLESS OTHERWISE SPECIFIED
DIMENSIONING & TOLERANCING PER ANSI Y14.5 1973
DIMENSIONS APPLY AT 68°F (20°C)
DO NOT SCALE DRAWING

DIMENSIONS	UNDER 6	6 - 18	OVER 18
DECIMAL	± .005	± .005	± .010
FRACTION	± 1/64	± 1/32	± 1/16

BREAK CORNERS 1/64 APPROX. R OR CHAM — FILLETS 1/64 TO 1/32 R
FINISH 1/1 AA125 MICRO IN.
ANGLES ± 0° - 30' CHAM ± 0°

POWER SYSTEMS
COMBUSTION ENGINEERING INC
NUCLEAR POWER SYSTEMS

DRAWN BY [illegible] 8/21/81
CHECKER
APPROVALS [illegible] 9/22/81

CUSTOMER
NEXT ASSY
SUPERSEDES
JOB NO. 776219
COMPONENT CODE
SCALE 1/4

TITLE PELLET TRAY HOLDER
DWG NO. NFM-D-4263 02
SHEET 1 OF 1 REV.

8 7 6 5 4 3 2 1

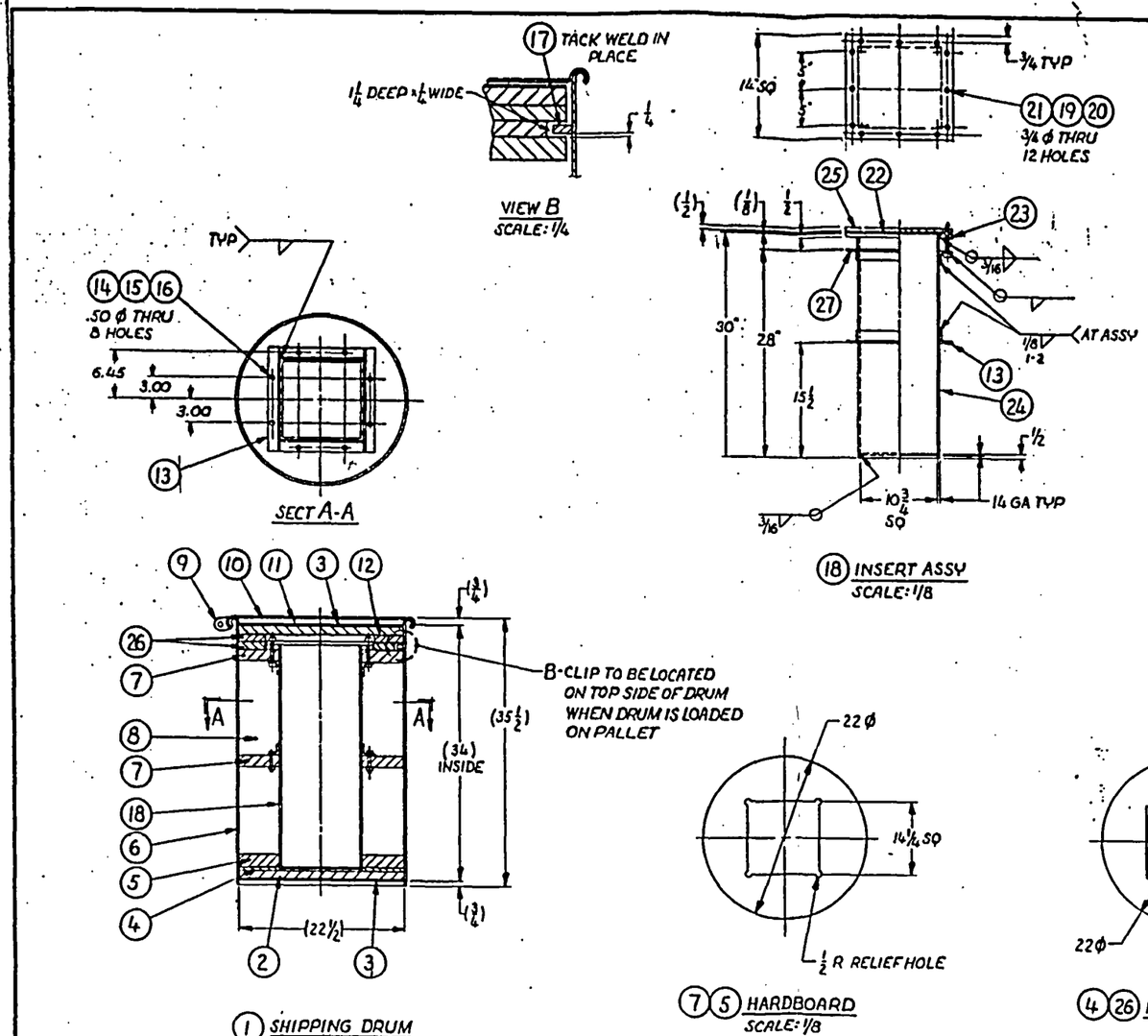

BILL OF MATERIALS

QUANTITIES ARE FOR

GROUP NO. & QUANTITY 6	5	4	3	2	1	ITEM NO.	NAME	PIECE NO.	MATERIAL	REMARKS
					X	1	SHIPPING DRUM	NFM-D-4540-1		
					1	2	PLYWOOD	-2	PLYWOOD	1" THK × 22" ϕ
					2	3	CERAMIC SHEET	-3	CERAMIC PAPER	[illegible]
					1	4	PLYWOOD	-4	PLYWOOD	1/2 THK × 22 ϕ
					1	5	HARDBOARD	[illegible]	[illegible]	1/2 THK × 22 ϕ
					1	6	SHIPPING DRUM	-6	STL	[illegible]
					2	7	HARDBOARD	[illegible]	[illegible]	1/2 THK × 22 ϕ
					1/4 REQ	8	THERMAL INSULATION	-8		[illegible]
					1	9	CLAMP RING	-9	STL	[illegible]
					1	10	DRUM LID ~12GA	-10	STL	[illegible]
					1	11	COVER	-11	ALUM	.032 THK
					2	12	PLYWOOD	-12	PLYWOOD	5/8 THK × 22 ϕ
					4 1/2 REQ	13	ANGLE	-13	STL	1 1/2 × 1 1/2 × 1/8
					8	14	HEX HD BOLT	-14	STL	5/16-18 × 2" LG
					8	15	HEX NUT	-15	STL	5/16-18
					16	16	WASHER	-16	STL	5/16
					1	17	CLIP	-17	C.S.	1/8 × 1/2 × 1"
				X	1	18	INSERT ASSY	-18		
					12	19	HEX HD BOLT	-19	STL	1/2-13 × 3 1/2 LG
					12	20	HEX NUT	-20	STL	1/2-13
					12	21	WASHER	-21	STL	1/2
					1	22	GASKET	-22		[illegible]
					1	23	FLANGE	-23	STL	1/2 × 14 × 14
					1/2 REQ	24	INSERT	-24	STL	14GA
					1	25	COVER	-25	STL	1/2 × 14 × 14
					2	26	PLYWOOD	-26	PLYWOOD	1" THK × 22 ϕ
					4 1/2 REQ	27	ANGLE	-27	STL	1 1/2 × 1 1/2 × 1/8

NFM-D-4540

UNLESS OTHERWISE SPECIFIED	POWER SYSTEMS COMBUSTION ENGINEERING INC	DRAWN BY MASLOSKI	4-30-88
DIMENSIONING & TOLERANCING PER ANSI Y14.5 1973	NUCLEAR POWER SYSTEMS	CHECKED	
DIMENSIONS APPLY AT 68°F (20°C)	CUSTOMER: NUCLEAR FUELS MANUFACTURING WINDSOR	APPROVED	10-11-88
DO NOT SCALE DRAWING		TITLE: UNC 2901 SHIPPING DRUM	
DIMENSIONS: UNDER 6 ± .005; 6 - 18 ± .005; OVER 18 ± .010	NEXT ASSY	SUPERSEDES	
DECIMAL: ± .005; ± .005; ± .010	JOB NO. 776219	COMPONENT CODE	SCALE NOTED
FRACTION: ± 1/64; ± 1/32; ± 1/16			UNIT NO. NFM-D-4540
BREAK CORNERS 1/64 APPROX. R OR CHAM — FILLETS 1/64 TO 1/32 R			SHEET OF REV.
FINISH 1/1 AA125 MICRO IN.			
ANGLES ± 0° - 30' CHAM ± 0°			

APPLICATION AMENDMENT DATE: JAN. 18, 1989 | Rev. 0 | Page 1-12

2. STRUCTURAL EVALUATION

The UNC 2901 shipping container was subjected to the hypothetical accident test condition in accordance with 10CFR71.36 and 49CFR173.398(c). The actual tests and results are discussed in detail in the report "Design and Structural Evaluation of a Loww Enriched UO_2 Pellet and Powder Shipping Package, Model UNC 2901", dated April 1970. (Appendix 2.1-A).

The container was again subjected to a thirty foot drop test while loaded with the powder drums. The actual tests and results are set forth in the supplement to the above referenced report. The supplement is dated November 1970. (Appendix 2.1-B).

2.1 Appendix

2.1-A Design and Structural Evaluation of a Low Enriched UO_2 Pellet and Powder Shipping Package

2.1-B Evaluation of UO_2 Powder Drums for use in Model UNC 2901 Shipping Package

DESIGN AND STRUCTURAL EVALUATION OF A LOW ENRICHED UO_2 PELLET AND POWDER SHIPPING PACKAGE

1.0 SUMMARY

A shipping package was designed for shipment of low enriched UO_2 pellets and powder. The package consisted basically of a square metal inner container supported and insulated inside an ~55 gallon steel outer drum. Pellets were packaged inside the inner container on Polyethylene coated corrugated trays. The shipping package was subjected to a series of drop, fire, and water tests to evaluate its structural stability. The results indicated that a structurally sound, fire-proof, leak resistant package had been developed.

2.0 DESCRIPTION OF SHIPPING PACKAGE

Details of the shipping container and pellet package are illustrated on the attached drawings #D-5007-8086, Revision 1 and D-5008-8192, Revision 2. The shipping container is to be identified as a UNC Model 2901.

The basic components of the shipping package are:

1. A 10.75" square inner container with a 1/2" thick flange and cover.
2. Twelve 1/2" diameter bolts securing the cover to the flange.
3. A full-faced 1/8" thick asbestos gasket on the inner container.
4. Three 1-1/2" thick hardboard support rings.
5. Angle iron welded completely around inner container for securing the hardboard.
6. A 1/8" thick asbestos sheet on top and bottom of outer drum.
7. 1" Thick plywood on bottom and 1-1/4" thick plywood on top of drum.
8. Fiberlite insulation, .75#/ft.^{3}, between inner and outer container.

Design and Structural Evaluation of a
Low Enriched UO_2 Pellet and Powder Shipping Package
Page Three

3.0 Structural Evaluation (continued)

3.2 Discussion of Results (continued)

3.2.1 Thirty Foot Drop Test

Conditions - The impact of the 30 foot drop was designed to occur at approximately 45° on the top corner of the square inner container. The selected corner for the first test condition was the corner containing the actual pellet package. These conditions were chosen as the most severe for the following reasons:

1. Experience from the same test performed on other packages indicated that maximum damage occurs from angular impact.

2. Impact on the top end was most likely to break loose the outer drum lid and expose the inner container during the fire and water tests.

3. Impact on the top end subjected the flange of the inner container to the maximum force and the seal on the gasket to the greatest potential for destruction.

4. The weld on the bottom plate was evaluated to be stronger than the parent metal, therefore, the point of failure from dropping on the bottom would have been the sides of the inner container. By dropping on the top corner, the sides were subjected to the same load and equal conditions existed.

5. The corners of the square insert had the least support. Therefore, impact at this point was directly on the weakest member.

Design and Structural Evaluation of a
Low Enriched UO_2 Pellet and Powder Shipping Package
Page Five

3.0 Structural Evaluation (continued)

3.2 Discussion of Results (continued)

3.2.1 Thirty Foot Drop Test (continued)

The condition of the drum in Test #2 (655 lbs.) is shown in picture 3A. The outer drum deformed ~2" in diameter at the point of contact only, but otherwise showed no significant damage. Since the pellet package proved to uphold its tray-pellet-tray arrangement in the first test, it was not necessary to re-evaluate its stability and, therefore, the load was composed solely of lead-filled boxes.

As was the case for Test #1, a few of the plywood and hardboard supports cracked but no damage occurred to the inner container. (See pictures 5B, 5C, 5D and 5E). All welds and bolts remained in tact and there was no shifting of either the inner container or the supports. The increased loading had no significant effect on the integrity of the inner container following the drop test.

3.2.2 Piston Drop Test

Conditions - For both loading conditions, the drum was dropped 5 ft. on to a 6" diameter x 8" long concrete piston. In Test #1, the point of impact was approximately midway between the center and upper hardboard support. This location was selected to determine if the outer drum would puncture and permit the piston to penetrate to the inner container. For Test #2, the selected impact point was directly on the center hardboard. This condition was evaluated to determine if the direct impact on the hardboard would drive it inward and deform the inner container.

Results - The condition of the outer drum after the piston drop for Tests #1 and #2 is shown in pictures 5 and 5A. In Test #1, a semi-circular hole was punctured through the outer drum in line with a corner of the inner container. No insulation or support material was lost through the hole and no damage was incurred by the inner container.

Design and Structural Evaluation of a
Low Enriched UO_2 Pellet and Powder Shipping Package
Page Seven

3.0 Structural Evaluation (continued)

3.2 Discussion of Results (continued)

3.2.3 Fire Test (continued)

Results - Pictures 9-18 illustrate the condition of the shipping package after all the tests were completed. As shown in picture 9, the 1/8" thick asbestos sheet and top 5/8" thick plywood were completely charred. The remaining plywood disks, pictures 10 and 11, were charred only around the edges, from 2-4 inches radially inward for the outermost piece and 3/4" to 1" for the inner disk. The uniform burn completely around the periphery of the plywood indicated an even heat distribution throughout the package. The hardboard was charred slightly as indicated in pictures 12-16, but no substantial loss in strength resulted. Similar results were found on the bottom.

As shown in picture 13, the Fiberlite insulation was charred radially inward from the outer container for approximately 2 inches. However, the insulation in contact with the inner container was unimpaired. The temperatures reached on the inside wall of the inner container are indicated in figure 1, page 9. The temperature template on the underside of the container during the test registered 180°F. A template on the top side during the test showed that portion of the container reached 200°F. (These temperatures verify that the heat was well distributed from top to bottom.) This temperature range had no detrimental effect on the Ethafoam cushioning inside the inner container. Pictures 15 and 16 show the undamaged condition of the cushioning. The asbestos flange gasket and pellet package were undamaged by the fire test; which is very apparent in Picture 15.

UNC-2901 SHIPPING CONTAINER

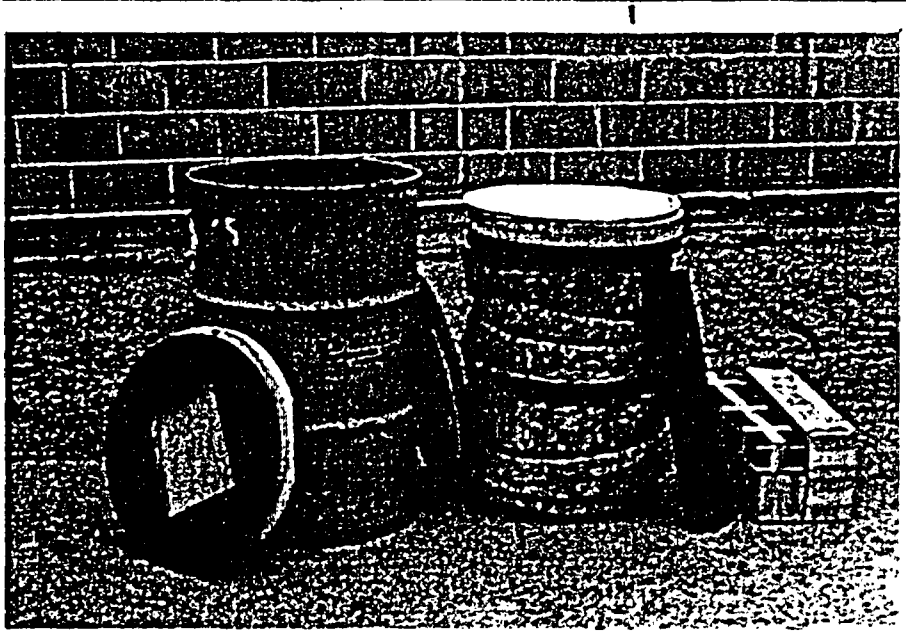

PICTURE 1 - Assembly of shipping package for Test #1.

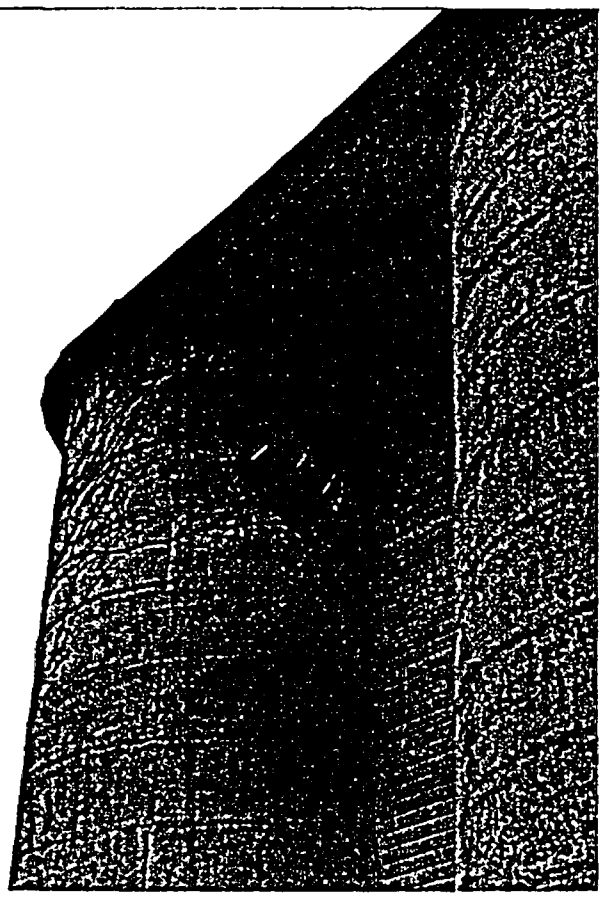

PICTURE 2- Shipping package in upper position for 30' drop test.

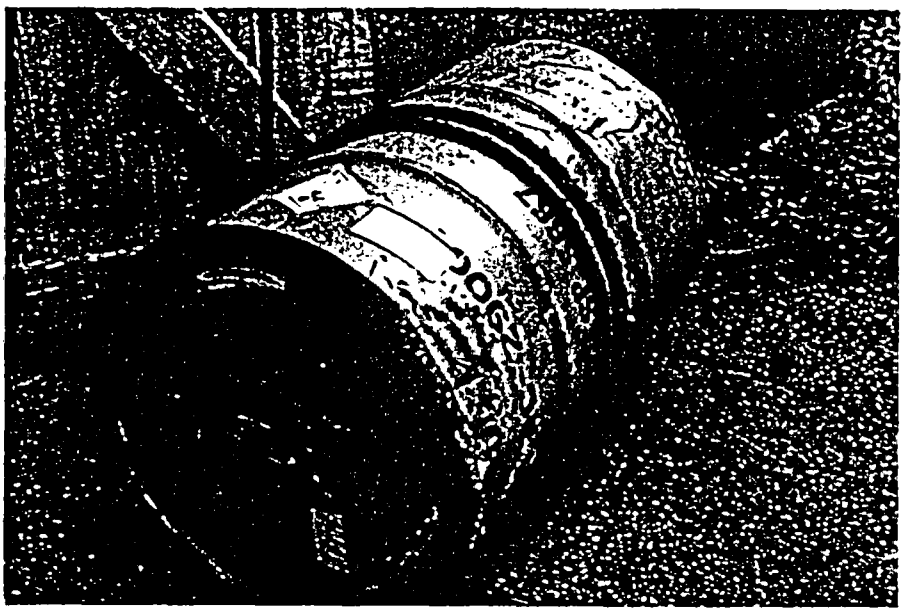

PICTURE 3 -Condition of outer drum after 30' drop test (Test #1).

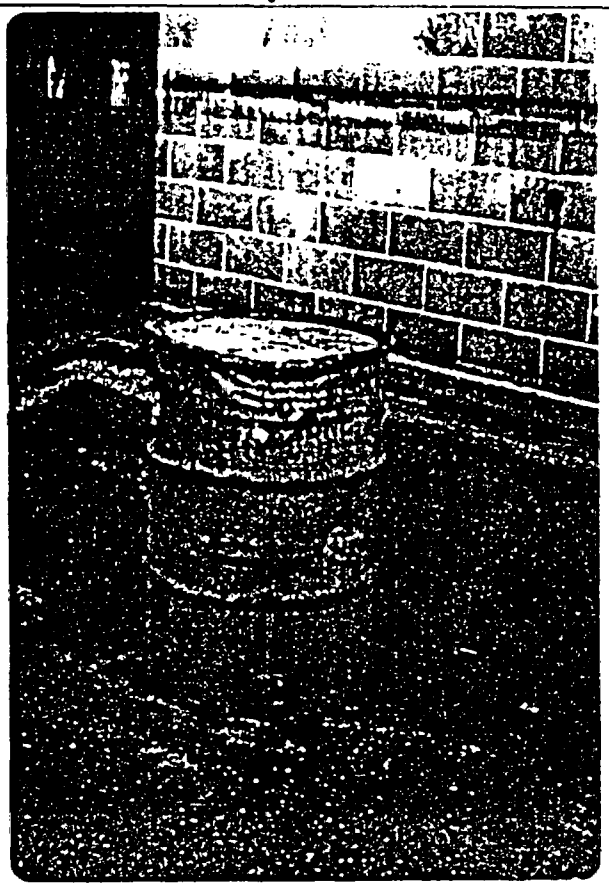

PICTURE 3A - Condition of outer drum after 30' drop test - (Test #2).

UNC-2901 SHIPPING CONTAINER

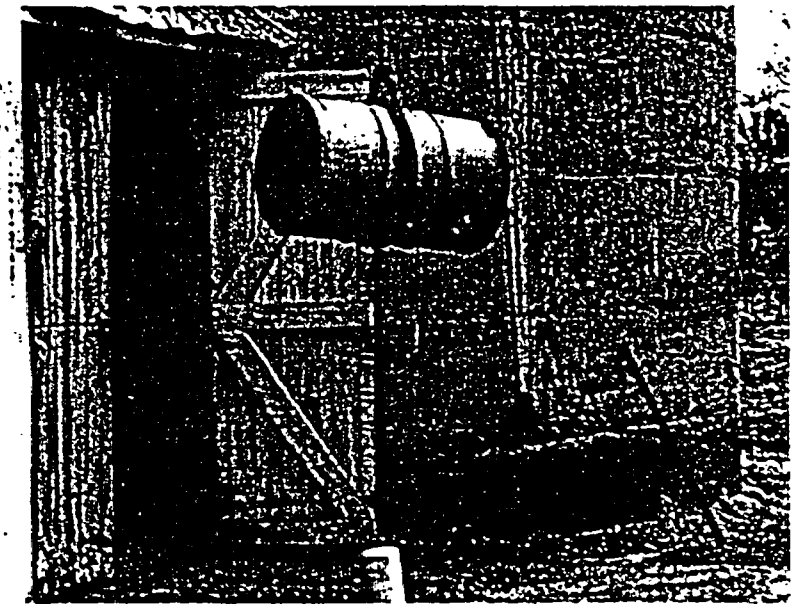

PICTURE 4 - Shipping package in upper position for piston drop.

PICTURE 5 - Condition of drum after piston drop - (Test #1).

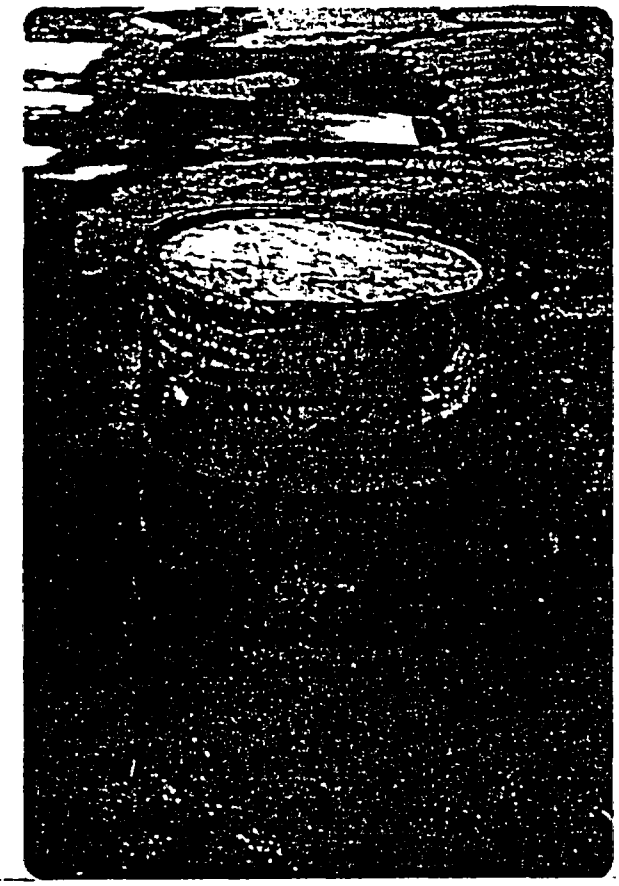

PICTURE 5A - Condition of drum after 30' drop and piston drop - (Test #2).

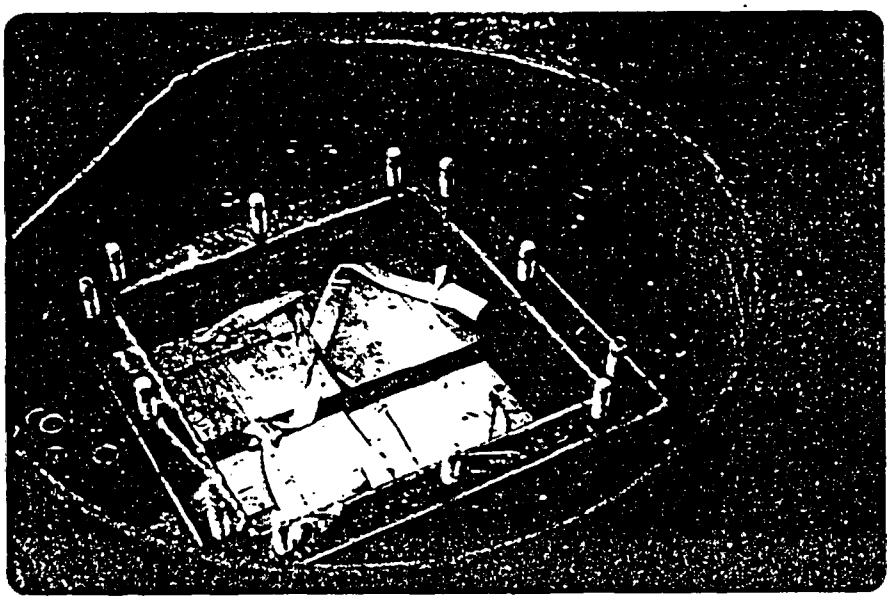

PICTURE 5B - Condition of flange after 30' drop and piston test - (Test #2).

UNC-2901 SHIPPING CONTAINER

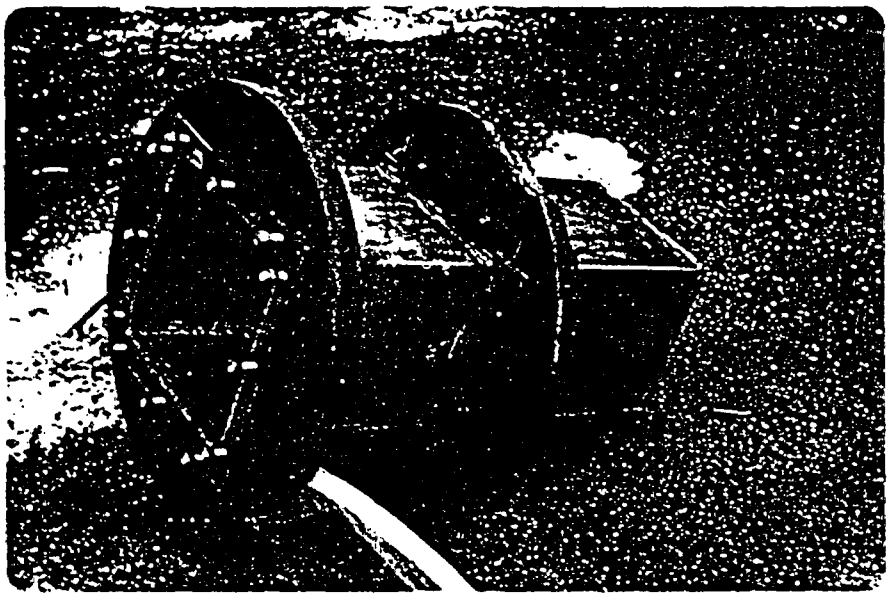

PICTURE 5C - Condition of inner container and hard-board after 30' drop and piston test- (Test #2).

PICTURE 5D - Condition of inner container after 30' drop and piston test - (Test #2).

UNC-2901 SHIPPING CONTAINER

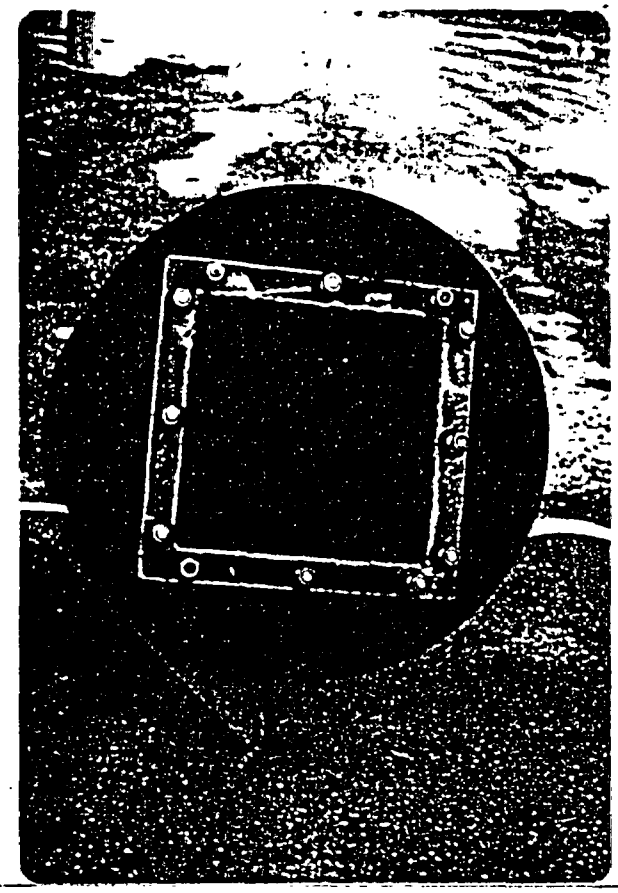

PICTURE 5E - View inside inner container after 30' drop and piston test - (Test #2).

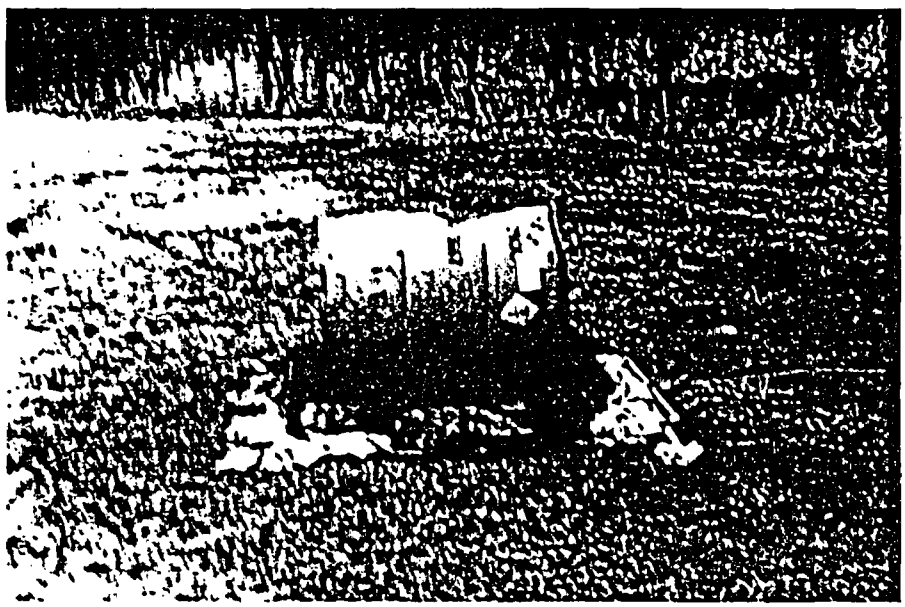

PICTURE 6 - Shipping package in position for fire test.

PICTURE 7 - Shipping package engulfed in flames during fire test.

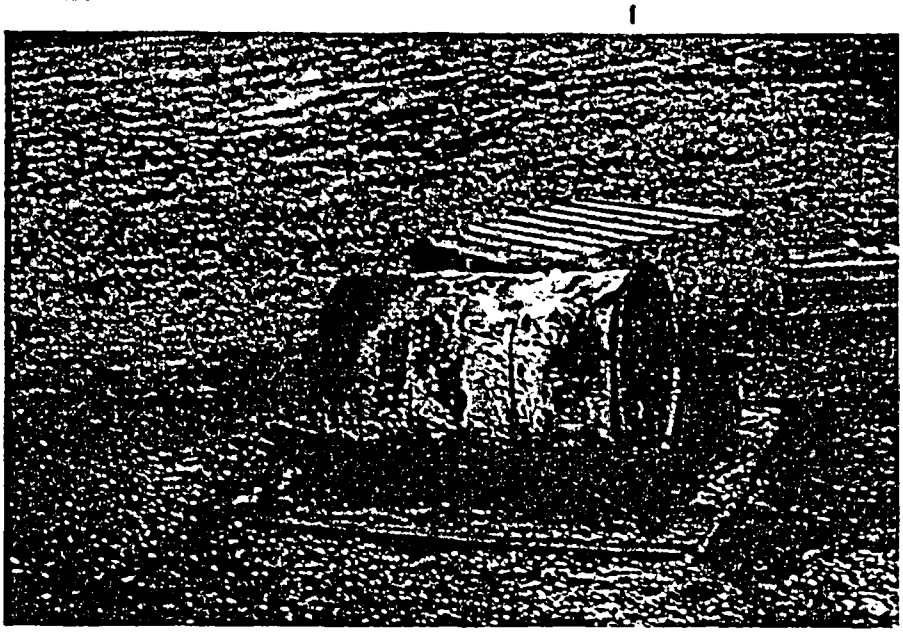

PICTURE 8 - Condition of outer drum after fire test.

PICTURE 9 - Condition of asbestos and top plywood sheet after fire and water test.

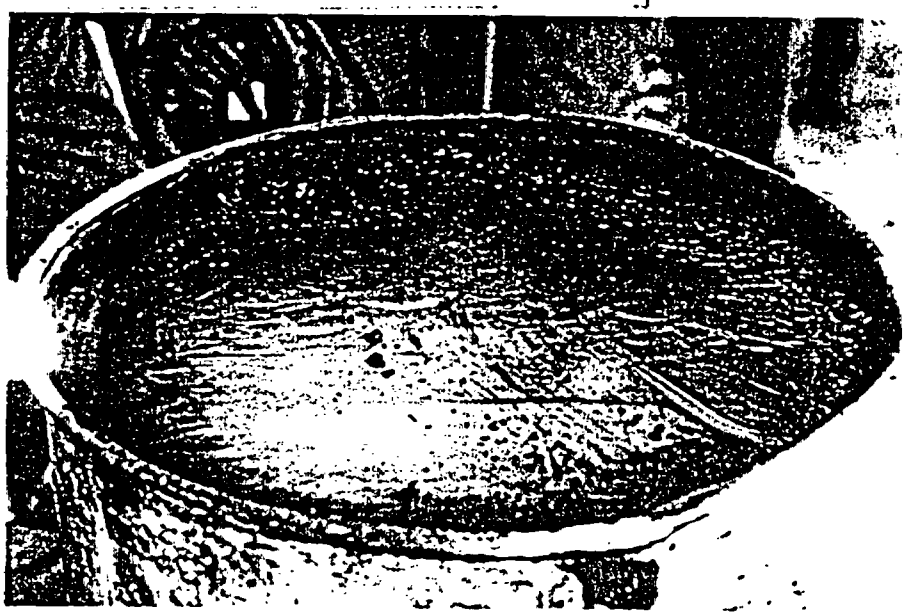

PICTURE 10 - Condition of second plywood sheet after fire and water test.

UNC-2901 SHIPPING CONTAINER

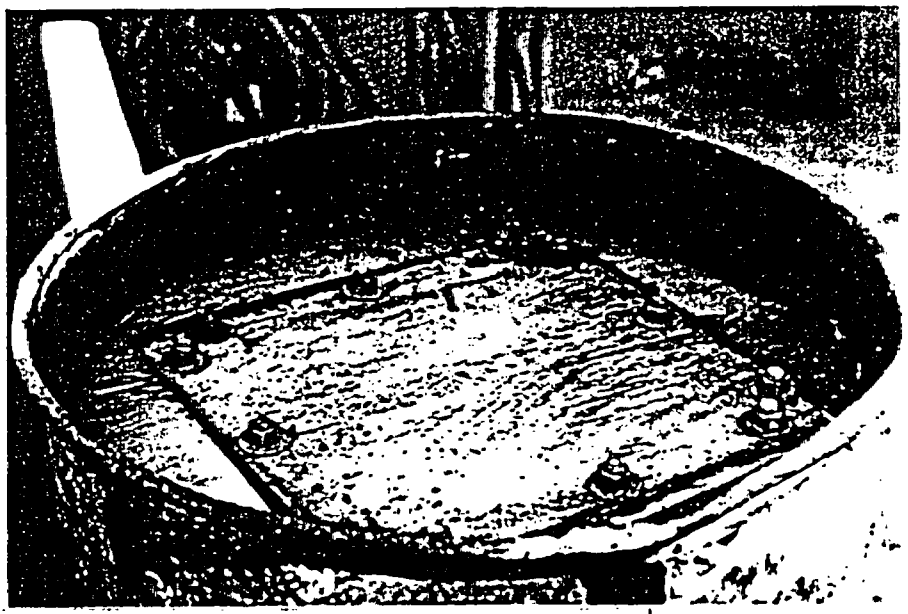

PICTURE 11 - Condition of flange cover and plywood disk around flange after fire and water test.

PICTURE 12 - Cut-out view of insulation and hardboard after fire and water test.

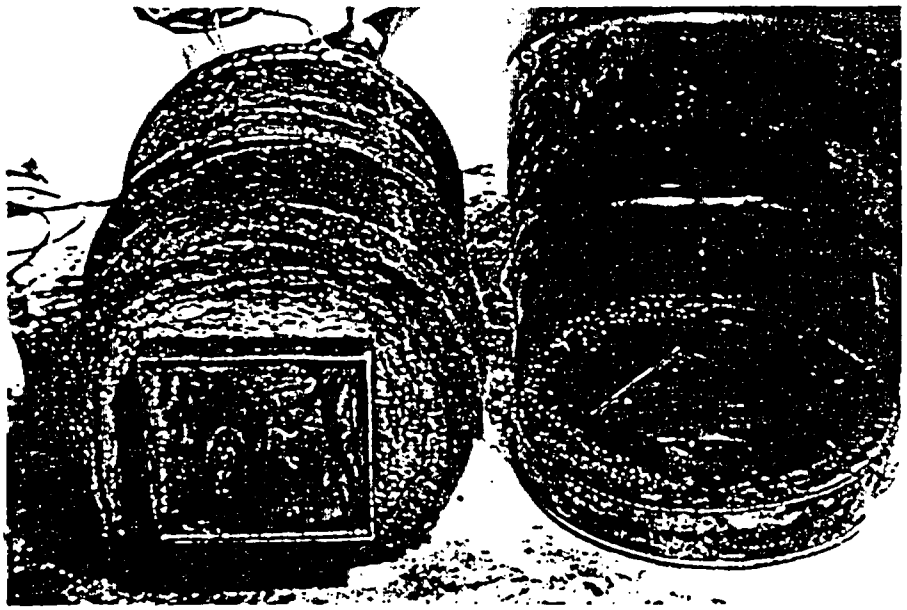

PICTURE 13 - Condition of bottom of inner and outer containers after completion of all tests.

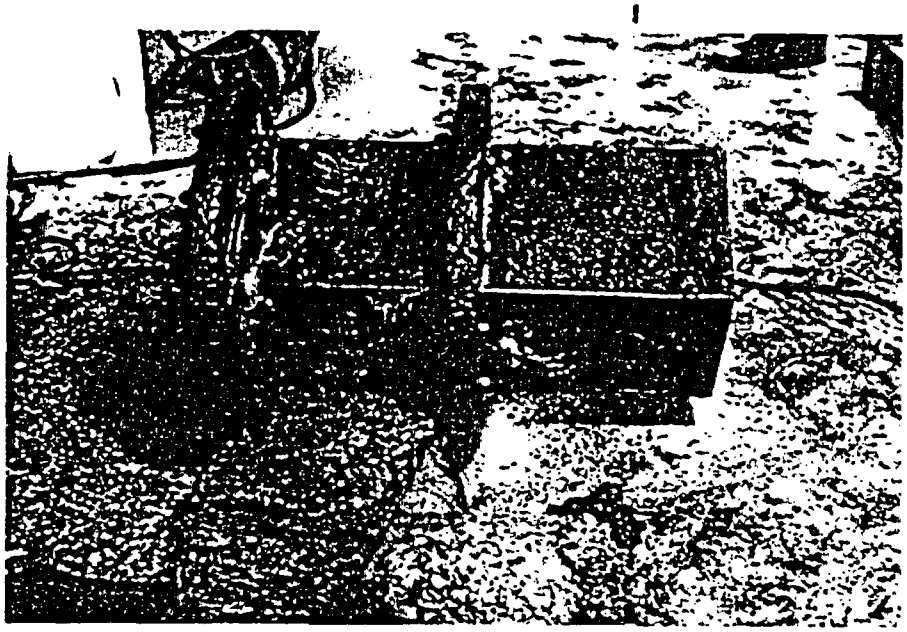

PICTURE 14 - View of inner container with insulation removed after completion of all tests.

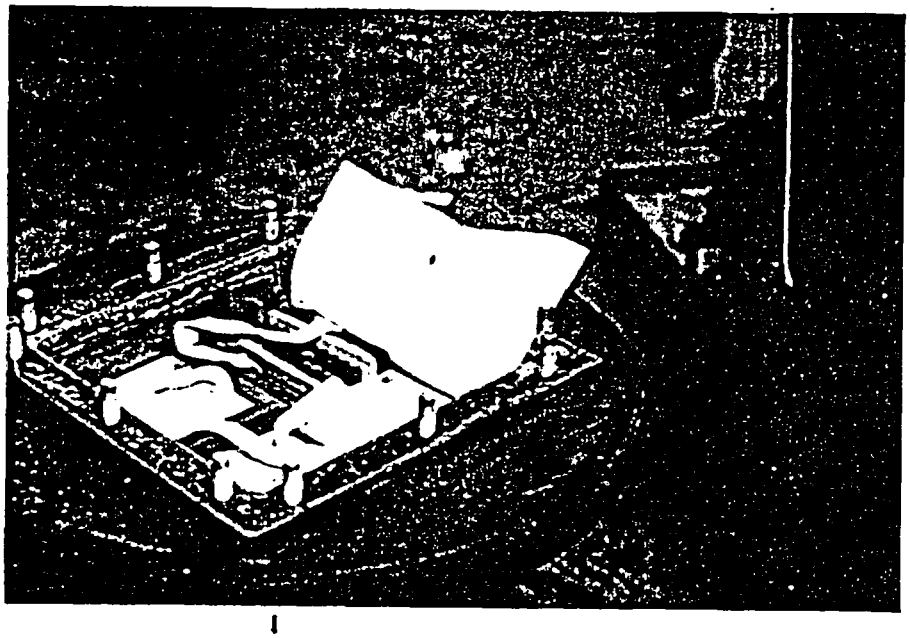

PICTURE 15 - Condition of pellet packages and cushioning material after completion of all tests.

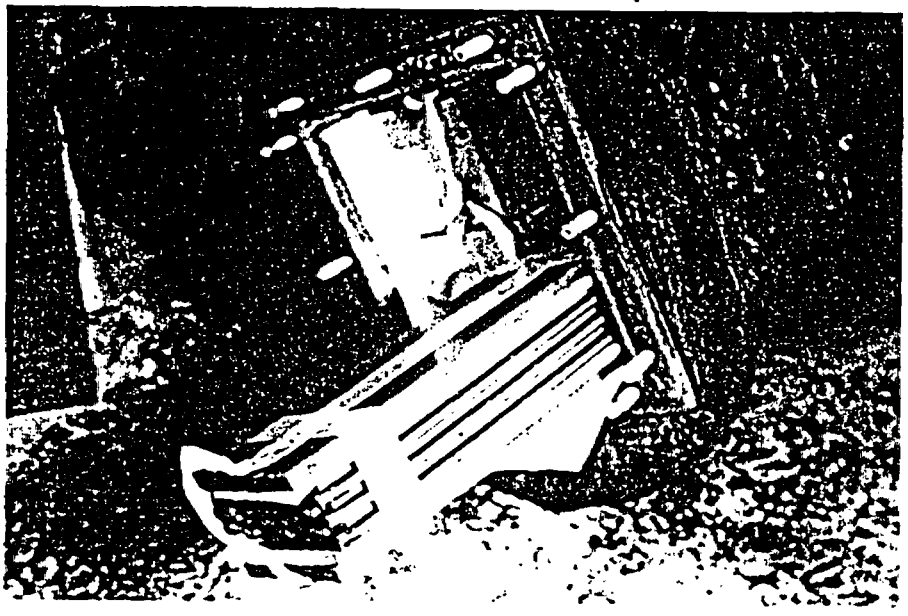

PICTURE 16 - Removal of pellet package after completion of tests.

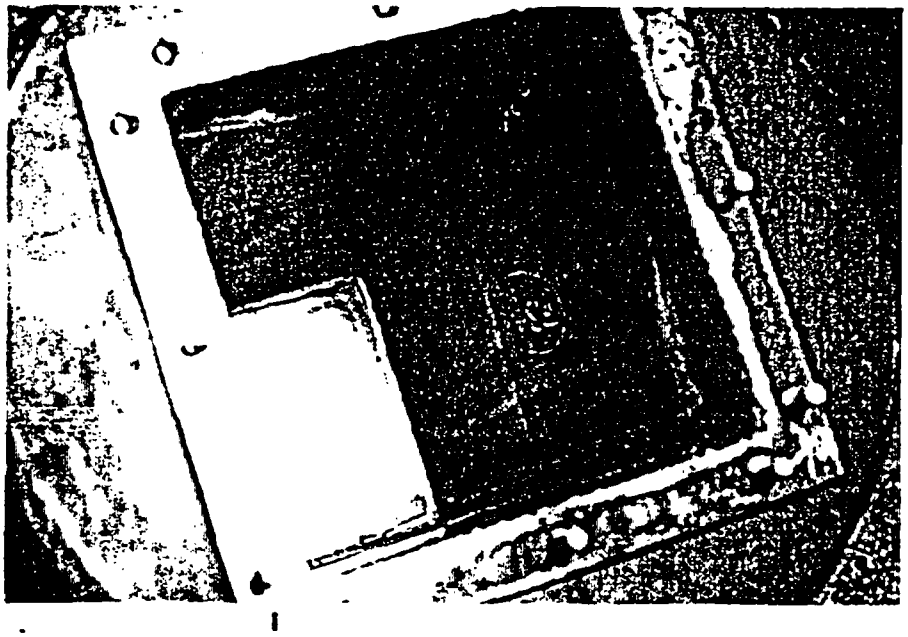

PICTURE 17 - Condition of inner container after completion of tests.

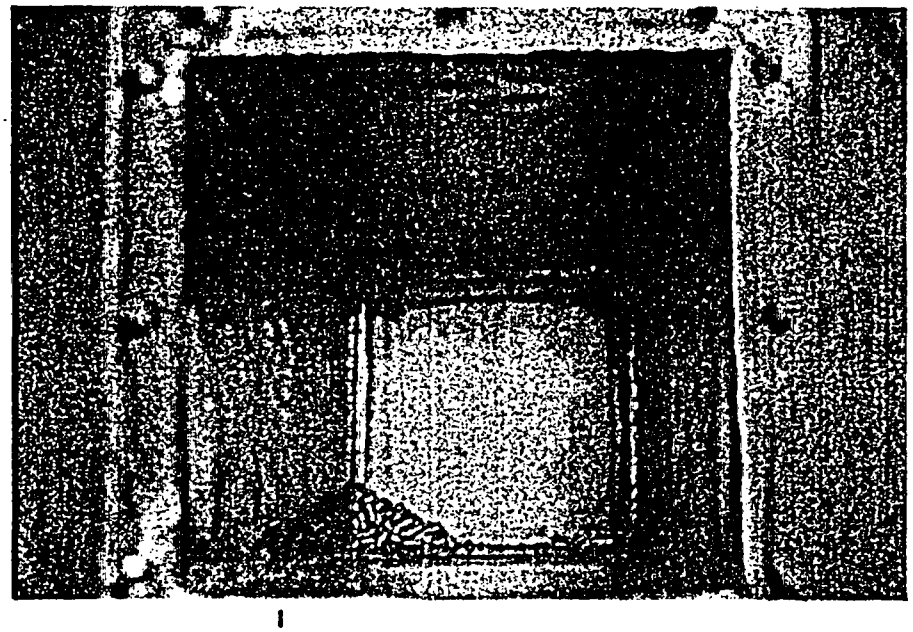

PICTURE 18 - Inner container and broken pellets after completion of tests.

UNC-2901 SHIPPING CONTAINER

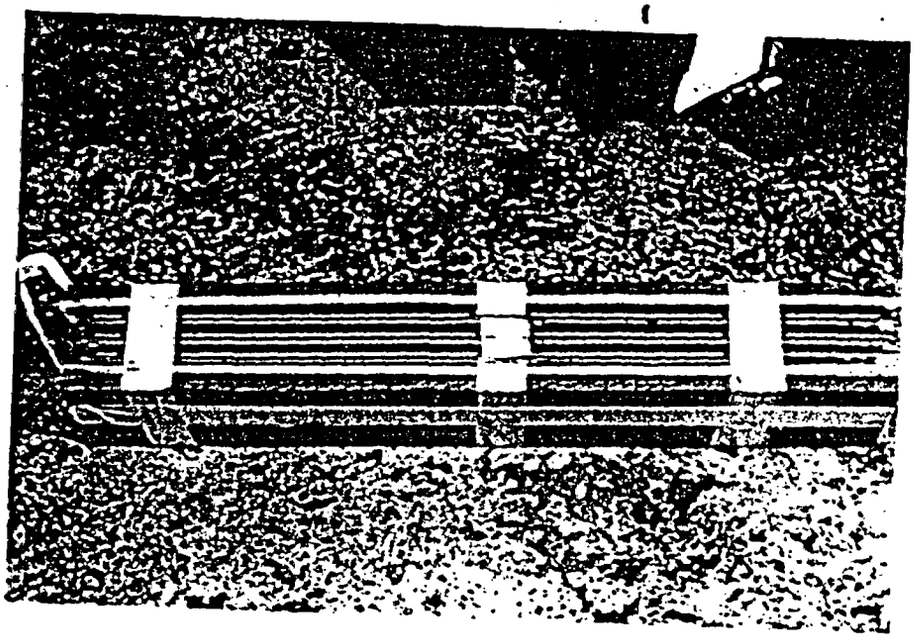

PICTURE 19 - Side of pellet package facing container wall during test.

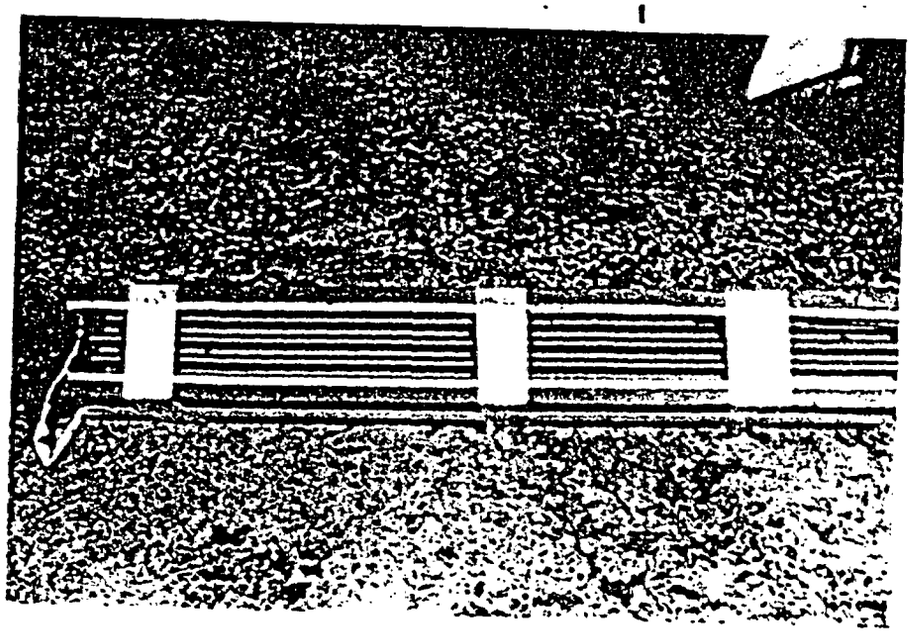

PICTURE 20 - Side of pellet package facing other package during test.

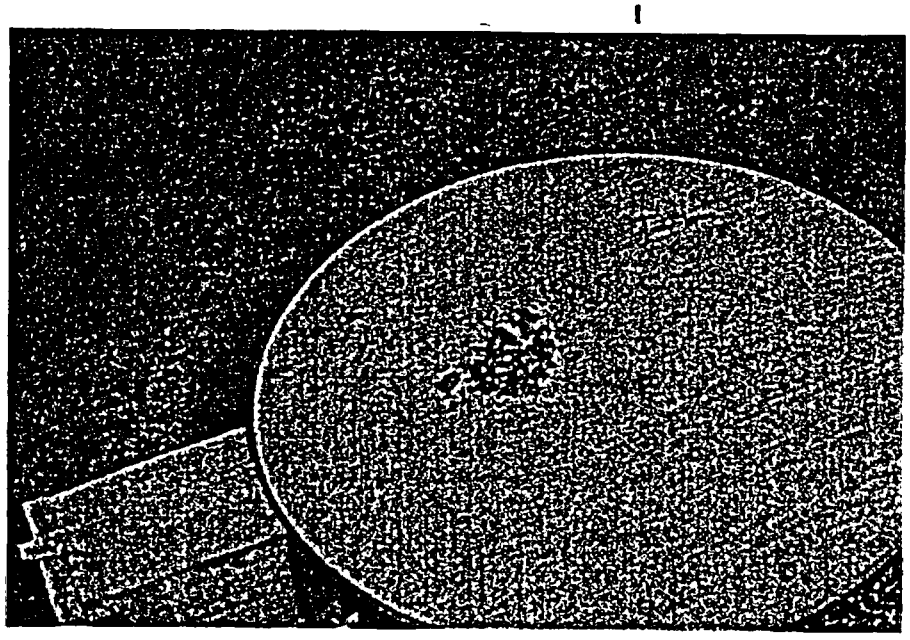

PICTURE 21 - Amount of pellets dislodged in test.

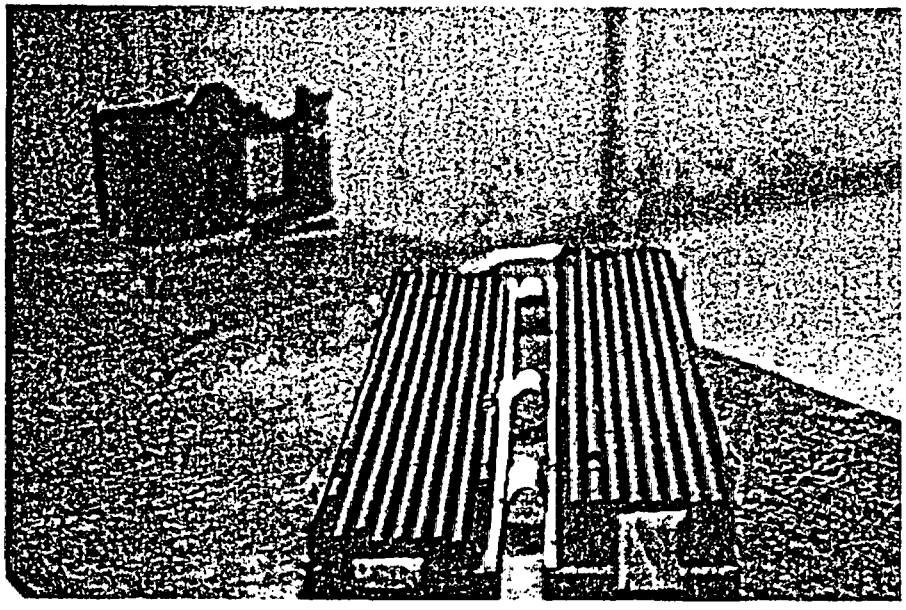

PICTURE 22 - Top row of disassembled package after test.

UNC-2901 SHIPPING CONTAINER

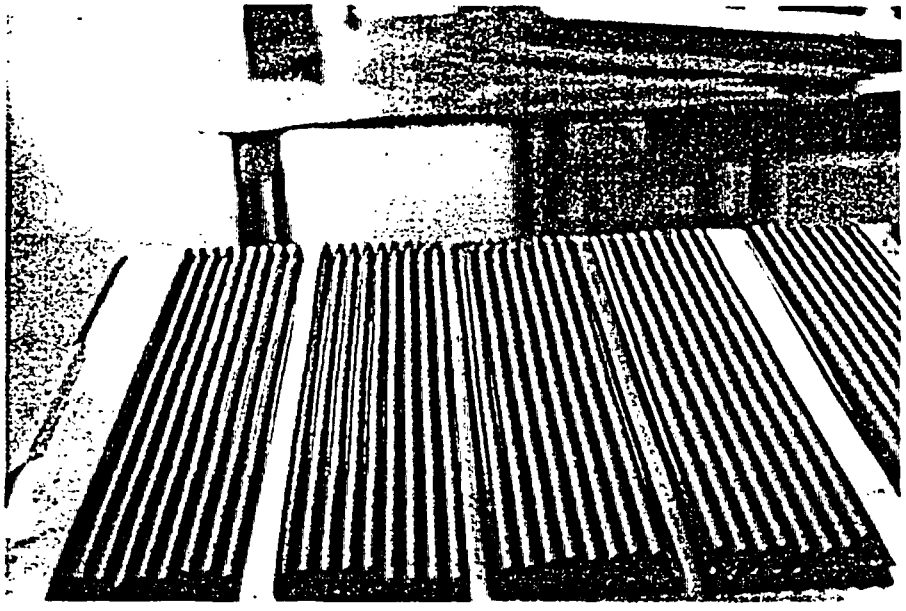

PICTURE 23 - Loaded pellet trays as assembled. Before testing.

APPENDIX 2.1-B

Evaluation of UO_2 Powder Drums for Use in Model UNC 2901 Shipping Package

Evaluation of UO_2 Powder Drums
for use in Model UNC 2901 Shipping Package
Page Two

3.0 STRUCTURAL EVALUATION

3.1 Conditions

The shipping package was subjected to one of the hypothetical accident conditions of the tests specified in 10 CFR 71.36 and 49 CFR 173.398 (c). This test was the 30 foot drop test. Original testing performed for the pellet shipment has demonstrated structural integrity of the inner and outer container including the ability to prevent water in-leakage. The net weight of the contents in that test was 427 pounds. Since the net weight of the contents for UO_2 powder is only 229.5 pounds, the original fire test, water test and "piston" drop test is applicable to this requirement; current testing was performed to demonstrate the ability of the powder drum to retain its contents.

One test was conducted. The 2901 container was assembled with two UO_2 powder drums. Each was filled with 110 pounds of lead shot and sand. The weight conditions were as follows:

Tare Weight (Assembled Container without Product Package)	227.5 pounds
Net Weight (Sand, Lead Shot, Drums & Packaging)	229.5 pounds
Equivalent Powder Weight	220.0 pounds
Equivalent Drum & Cushion Weight	9.5 pounds
Total Gross Weight	457.0 pounds

3.2 Discussion of Results

Photographs of the shipping drum and cushioning in its various stages of assembly are included in the Appendix of this report.

Evaluation of UO_2 Powder Drums
for use in Model UNC 2901 Shipping Package
Page Four

3.0 Structural Evaluation (continued)

3.2 Discussion of Results (continued)

3.2.1 Thirty Foot Drop Test (continued)

Results (continued)
The top & center 1 inch thick Ethafoam cushions were completely severed by the impact of the powder drums. Both of the polystyrene cushions were broken into two pieces. Deformation of the cushion was not severe and both powder drums were securely in place.

The locking ring and top flange of both powder drums were deformed. The bottom of the top powder drum was also badly deformed by the impact of the bottom powder drum. Although the drums were deformed, the locking rings and lid remained in place. There was no leakage noted at the drum lid or bottom seam.

MATERIAL FOR COMPLETE ASSEMBLY

ITEM NO.	PART DESCRIPTION	NO. REQ'D	SOURCE

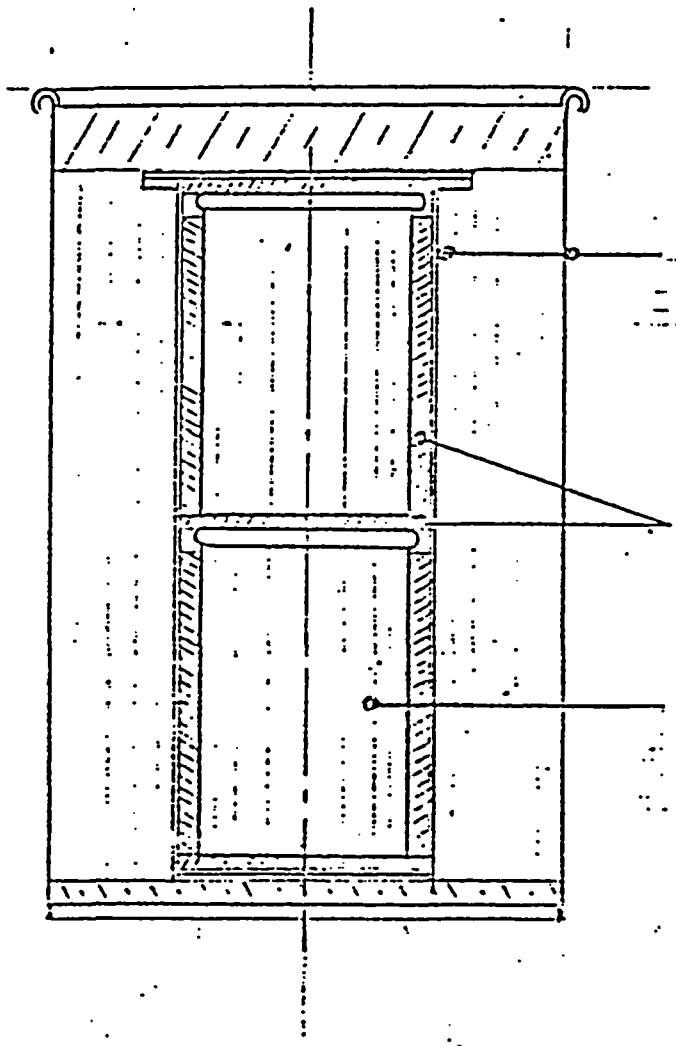

REV.	BY	DATE	APP'D.	DATE	JOB NO.	DESCRIPTION	W.O. NO.

TOLERANCES
UNLESS OTHERWISE SPECIFIED
FRACTIONAL ±
DECIMAL ±
ANGULAR ±
FINISH SYMBOL ASA ST'D

UNITED NUCLEAR CORPORATION
FUELS DIVISION
HEMATITE MISSOURI

UNC-2901 ; UO_2 POWDER SHIPPING CONTAINER ASSEMBLY

SCALE ~	DWN. BY VAL	APP'D.	A-5007-2011	REV.
DATE 9-29-70	CHK'D BY L. Deal	APP'D.		

MATERIAL FOR COMPLETE ASSEMBLY

ITEM NO.	PART DESCRIPTION	NO. REQ'D	SOURCE

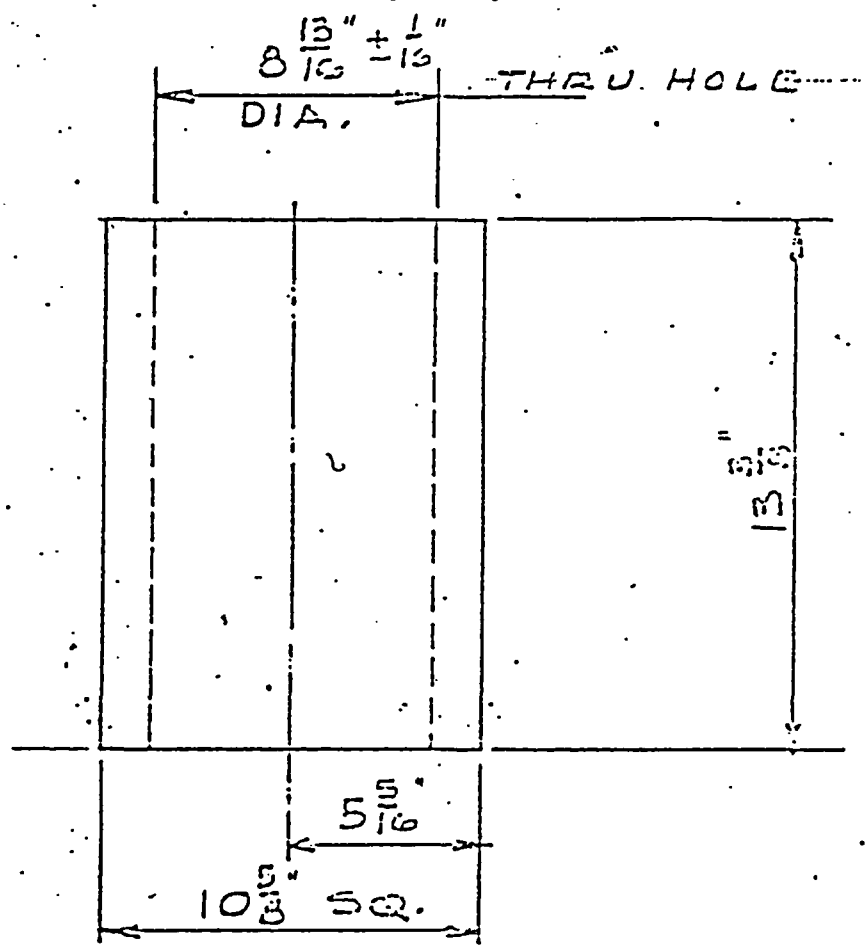

MATL:

LARGE BEAD "POLYSTYRENE".
DOWCHEM. CO. TYRILL FOAM OR EQUAL.

REV.	BY	DATE	APP'D.	DATE	JOB NO.	DESCRIPTION	W. O. NO.

TOLERANCES
UNLESS OTHERWISE SPECIFIED
FRACTIONAL ± 1/16"
DECIMAL ± —
ANGULAR ± —
FINISH SYMBOL ASA STD

UNITED NUCLEAR CORPORATION
FUELS DIVISION
HEMATITE MISSOURI

INSERT PAIL CUSHION FOR
2901. POWDER SHIPPING DRUM

SCALE —
DWN. BY VAL
APP'D.
DATE 11-17-70
CHK'D BY
APP'D.

A-5007-8111

REV.

4. CONTAINMENT

4.1 Containment Boundary

4.1.1 Containment Vessel

Within the UNC 2901 shipping container a square inner container provides the containment boundary for the radioactive contents. The top closure is be means of steel plate bolted to an external flange welded to the square body. A seal is formed by a gasket capable of withstanding temperatures up to at least 500°F.

4.1.2 Containment Penetrations

There are no penetrations into the inner containment vessel.

4.1.3 Seals and Welds

The seal of the inner container closure is formed by a gasket 0.125 inch thick between the surfaces of a flange welded to the outer surface of the square body and the top closure cover. The gasket is rated for at least 500°F service and since there is no significant heat generated by the package payload, the seal is unaffected by temperatures encountered in normal conditions of transport. Also, testing described in Section 2.1 has shown that the gasket is unaffected by the temperatures attained in the Hypothetical Accident Conditions.

All welds are visually inspected to ensure that parent metals are well fused, weld (or heat affected zone) is free of cracks, craters, or burnouts.

4.1.4 Closure

The inner container closure is formed by a 0.5 inch steel plate bolted to an external flange welded to the square inner container. Material specifications for the plate and the bolts and nuts are listed on Drawings NFM-D-4540 and D-5007-8086, Rev. 05 in Appendix 1.3. The bolted inner container closure lid with a 0.125 inch thick gasket is sufficient to maintain a positive seal during normal and accident conditions of transport.

4.2 Requirements for Normal Conditions of Transport

Submittal of the UNC 2901 shipping container to the tests specified in 10 CFR 71.71.36 and 49CFR 173.398(C) has shown that there will be no loss or dispersal of radioactive contents, no significant increase in external radiation levels, and no substantial reduction in the effectiveness of the packaging. Fully loaded containers subjected to the full series of spray, free drop and penetration tests showed no degradation of effectiveness of the inner container and no leakage of water into the inner container.

5. SHIELDING EVALUATION

The UNC-2901 shipping containers are used for the shipment of oxides of low enriched uranium (≤5 wt.% U-235) in pellet or powder form. Thus, shielding is not a consideration in the design and construction of this shipping container.

6.1.2.3 Summary

Based on the above analysis results 102 containers can be safely shipped as Fissile Class II and 204 containers as Fissile Class III.

6.1.3 Individual Container - UO_2 Powder

The individual container with two steel powder cans each containing 35.0 Kg of 5.0 wt% U-235 and fully flooded with water in the powder can, the inner container, the outer container and reflected resulted in a K_{eff} = 0.89 (Figures 6.5 and 6.6).

6.1.4 Array of Containers - UO_2 Powder

6.1.4.1 Normal Transportation

The hypothetical accident test demonstrated that water cannot enter the inner container. Therefore, the only moderation is the water exterior to the container and the moderation provided by the packaging materials. A reflected rectangular array of 512 containers (8 x 8 x 8) was analyzed to have a K_{eff} of approximately 0.57 (Figures 6.7 and 6.8). Applying the standard safety factors the allowable number of containers would be:

Fissile Class II	102 containers
Fissile Class III	204 containers

6.1.4.2 Accident Conditions

The hypothetical accident test demonstrated that:

1) Water cannot enter the inner container.
2) The total container remained intact.
3) The inner container is not deformed.

Therefore, moderation is only as provided by the packaging materials and water between the outer and inner containers. For conservatism, however, water was assumed to be in the inner container surrounding the powder cans. A reflected rectangular array of 216 containers (6x6x6) was analyzed to have a K_{eff} of approximately 0.58 (Figures 6.9 and 6.10). Applying the standard safety factors the allowable number of containers are:

Fissile Class II	108
Fissile Class III	216

6.1.4.3 Summary

Based on the above analysis results, 102 containers can be safely shipped as Fissile Class II and 204 containers as Fissile Class III.

The following assumptions have been made for the analysis for the UO_2 powder:

a. The shipping container contains two (2) virgin powder cans. Each virgin powder can is sealed and holds a homogeneous mixture of 35 kg UO_2 powder at 5 wt% U235 and 5 wt% water. The virgin powder cans are assumed to remain sealed under accident conditions.

b. In the KENO model, the virgin powder cans are stacked on top of each other equidistant from the sides of the inner container.

c. The geometry of the shipping container, the composition of the Fiberlite insulation, and the reflection are the same as for the pellet analysis.

d. The analysis of the isolated shipping container assumes each powder can hold the 35 kg of UO_2 powder but is fully flooded with water. The inner container is assumed flooded. In the outer container, the Fiberlite has been replaced with water. The shipping container is reflected by 30 cm of water.

6.4 Criticality Calculation

6.4.1 Calculational Method

For the fuel pellet analysis the NITAWL code (Ref. 3) was used to generate self-shielded 123-group cross sections from a master AMPX library (Ref. 4). The resulting working library was then collapsed into a homogenized 16-group library based on an infinite lattice of uniformly spaced fuel pellets representative of the environment in the pellet tray using XSDRNPM (Ref. 3). XSDRNPM was also used to obtain separate 16-group cross section sets for the structural materials, insulation, and the moderator areas external to the fuel area. Reactivities were calculated using KENO IV (Ref. 5), a three-dimensional Monte Carlo criticality code.

The mist configurations chosen for the criticality calculations in the accident cases were based on an iterative process. The intent was to determine the most reactive configuration given the possible areas of moderation.

For the analysis of the virgin powder containers, the KENO IV code was also used to calculate the reactivity. However, the cross sections used were from the 16-group Hansen-Roach library which was provided with the code.

6.4.2 Criticality Results

The k-effectives for the calculations performed for the pellet analysis are shown in Table 6-1. Assuming moderation only in the inner container, the full-flood case is the most reactive. Sufficient moderation in the outer

Water was then introduced into the bottom of the tank and the critical height determined for each configuration. The resulting values are summarized in Table 6-2.

The calculated results shown in Table 6-2 were performed by the criticality service of the French Atomic Energy Commission. Two-step calculations were performed using the APPOLLO and MORET codes. The neutron constant was first calculated by the APPOLLO code and then the K_{eff} was calculated using the MORT code.

The APPOLLO code is used with the "transport" option to calculate the material buckling B^2 and the Keff of an infinite lattice of rods in its ambient medium (water or air) and to determine the macroscopic cross-section of the homogenized lattice based on the 16 energy groups of Hansen and Roach. The cross-section library used in the code is ENDF/B-III based and consists of 99 groups (52 fast and 47 thermal groups).

The MORET code is a Monte Carlo code that calculates the Keff of any configuration. The collisions are treated isotropically but aniostropy is taken into account by means of the transport corrections.

6.5.3 Computer Codes

The computer codes employed in C-E's analysis were KENO IV (2), NITWAL, and XSDRNPM (5). The reference microscopic cross section library was the 123 group super-XSDRN library, DLC-16 (6), which was obtained from the Radiation Shielding Information Center.

6.5.4 Cross Section Generation

The NITAWL and XSDRNPM codes (5) were used to generate 16 neutron energy group cross sections. NITAWL was used to generate self shielded 123 group cross sections from the 123 group super-XSDRN library (DLC-16). The resulting working library is then collapsed into homogenized 16 energy group library in a typical fuel pin cell environment using XSDRNPM. XSDRNPM is also used to obtain separate 16 group cross section sets for structural and external moderators.

6.5.5 KENO IV Models

Homogenized fuel pin representation was utilized in the assembly interior. The cross shaped box, the outside moderator, tank wall, lattice grid, fuel pin lower plug, bottom plate and support plate were all explicitly represented. The structural details are shown in Figure 6.11 (which were obtained from Reference 1).

Figure 6.1

KENO IV Output
Pellets
8x8x8 Array Non-Accident Geometry

Lifetime = 3.75350E-04 + or - 5.03355E-06 Generation Time = 3.25836E-04 + or - 6.84464E-06

No of Initial Generations Skipped	Average K-Effective		Deviation	67 Per Cent Confidence Interval	95 Per Cent Confidence Interval	99 Per Cent Confidence Interval	No. of Histories
3	.43569	+ or -	.00558	.43011 to .44127	.42453 to .44685	.41895 to .45242	8000
4	.43549	+ or -	.00596	.42953 to .44145	.42356 to .44741	.41760 to .45337	7500
5	.43418	+ or -	.00625	.42794 to .44043	.42169 to .44668	.41544 to .45293	7000
6	.43341	+ or -	.00670	.42671 to .44011	.42001 to .44680	.41332 to .45350	6500
7	.43469	+ or -	.00715	.42755 to .44184	.42040 to .44898	.41326 to .45613	6000
8	.43400	+ or -	.00779	.42621 to .44179	.41842 to .44958	.41063 to .45737	5500
9	.42964	+ or -	.00713	.42250 to .43677	.41537 to 44391	.40823 to .45104	5000
10	.42551	+ or -	.00651	.41900 to .43202	.41249 to .43853	.40598 to .44504	4500
11	.42364	+ or -	.00707	.41657 to .43071	.40950 to .43778	.40243 to 44484	4000
12	.42622	+ or -	.00760	.41863 to .43382	.41103 to .44142	.40343 to .44901	3500
17	.42541	+ or -	.02096	.40445 to .44637	.38349 to .46733	.36253 to .48829	1000

Figure 6.3

KENO IV Output
Pellets
6x6x6 Array Accident Geometry

Lifetime = 2.45943E-04 + or - 4.14469E-06 Generation Time = 8.13937E-05 + or - 2.04198E-06

No of Initial Generations Skipped	Average K-Effective		Deviation	67 Per Cent Confidence Interval	95 Per Cent Confidence Interval	99 Per Cent Confidence Interval	No. of Histories
3	.90781	+ or -	.00582	.90200 to .91363	.89618 to .91945	.89036 to .92527	16500
4	.90744	+ or -	.00599	.90145 to .91343	.89546 to .91942	.88947 to .92541	16000
5	.90983	+ or -	.00567	.90416 to .91551	.89849 to .92118	.89281 to .92685	15500
6	.91210	+ or -	.00538	.90673 to .91748	.90135 to .92285	.89597 to .92823	15000
7	.91268	+ or -	.00553	.90715 to .91821	.90162 to .92375	.89608 to .92928	14500
8	.91245	+ or -	.00573	.90672 to .91817	.90099 to .92390	.89526 to .92963	14000
9	.91146	+ or -	.00586	.90560 to .91731	.89975 to .92317	.89389 to .92903	13500
10	.91172	+ or -	.00608	.90564 to .91780	.89957 to .92388	.89349 to .92996	13000
11	.91037	+ or -	.00617	.90420 to .91654	.89803 to .92271	.89186 to .92888	12500
12	.90765	+ or -	.00577	.90188 to .91342	.89611 to .91919	.89033 to .92496	12000
17	.90071	+ or -	.00550	.89521 to .90620	.88971 to .91170	.88422 to .91720	9500
22	.90005	+ or -	.00697	.89308 to .90702	.88612 to .91399	.87915 to .92095	7000
27	.90714	+ or -	.00809	.89905 to .91523	.89096 to .92332	.88287 to .93141	4500
32	.89835	+ or -	.00842	.88993 to .90677	.88151 to .91520	.87308 to .92362	2000

Figure 6.5

KENO IV Output
Powder
Isolated Container Geometry

Lifetime = 8.74592E-05 + or - 1.22962E-06 Generation Time = 2.49856E-05 + or - 3.46751E-07

No of Initial Generations Skipped	Average K-Effective		Deviation	67 Per Cent Confidence Interval	95 Per Cent Confidence Interval	99 Per Cent Confidence Interval	No. of Histories
3	.88993	+ or -	.00805	.88188 to .89798	.87383 to .90603	.86578 to .91408	11500
4	.89015	+ or -	.00842	.88172 to .89857	.87330 to .90699	.86488 to .91541	11000
5	.89211	+ or -	.00859	.88352 to .90070	.87493 to .90929	.86635 to .91788	10500
6	.89510	+ or -	.00846	.88664 to .90357	.87817 to .91203	.86971 to .92050	10000
7	.89676	+ or -	.00875	.88801 to .90551	.87926 to .91426	.87051 to .92301	9500
8	.89529	+ or -	.00912	.88617 to .90441	.87706 to .91353	.86794 to .92265	9000
9	.89317	+ or -	.00940	.88376 to .90257	.87436 to .91197	.86495 to .92138	8500
10	.89464	+ or -	.00989	.88476 to .90453	.87487 to .91442	.86498 to .92431	8000
11	.89633	+ or -	.01042	.88591 to .90675	.87550 to .91716	.86508 to .92758	7500
12	.89497	+ or -	.01109	.88388 to .90606	.87278 to .91715	.86169 to .92824	7000
17	.89766	+ or -	.01435	.88331 to .91202	.86895 to .92637	.85460 to. 94072	4500
22	.88197	+ or -	.02874	.85324 to .91071	.82450 to .93945	.79576 to .96818	2000

Figure 6.7

KENO IV Output
Powder
8x8x8 Array Non-Accident Geometry

Lifetime = 2.25615E-04 + or - 2.34347E-06 Generation Time = 1.59572E-04 + or - 3.02960E-06

No of Initial Generations Skipped	Average K-Effective		Deviation	67 Per Cent Confidence Interval	95 Per Cent Confidence Interval	99 Per Cent Confidence Interval	No. of Histories
3	.56998	+ or -	.00474	.56524 to .57472	.56051 to .57946	.55577 to .58420	10500
4	.57035	+ or -	.00497	.56538 to .57531	.56041 to .58028	.55545 to .58525	10000
5	.56793	+ or -	.00457	.56336 to .57250	.55878 to .57707	.55421 to .58164	9500
6	.56653	+ or -	.00460	.56193 to .57114	.55733 to .57574	.55272 to .58034	9000
7	.56577	+ or -	.00481	.56095 to .57058	.55614 to .57539	.55132 to .58021	8500
8	.56568	+ or -	.00512	.56055 to .57080	.55543 to .57592	.55030 to .58105	8000
9	.56306	+ or -	.00471	.55835 to .56777	.55364 to .57249	.54893 to .57720	7500
10	.56316	+ or -	.00506	.55809 to .56822	.55303 to .57328	.54797 to .57834	7000
11	.56252	+ or -	.00542	.55709 to .56794	.55167 to .57336	.54625 to .57878	6500
12	.56120	+ or -	.00572	.55548 to .56692	.54976 to .57264	.54405 to .57836	6000
17	.55035	+ or -	.00550	.54486 to .55585	.53936 to .56135	.53386 to .56685	3500
22	.53907	+ or -	.00266	.53641 to .54173	.53375 to .54440	.53108 to .54706	1000

Figure 6.9

KENO IV Output
Powder
6x6x6 Array Accident Geometry

Lifetime = 2.73425E-04 + or - 2.79493E-06 Generation Time = 9.94471E-05 + or - 2.31070E-06

No of Initial Generations Skipped	Average K-Effective		Deviation	67 Per Cent Confidence Interval	95 Per Cent Confidence Interval	99 Per Cent Confidence Interval	No. of Histories
3	.58179	+ or -	.00619	.57560 to .58798	.56941 to .59417	.56323 to .60035	12000
4	.58221	+ or -	.00645	.57576 to .58866	.56931 to .59510	.56286 to .60155	11500
5	.58294	+ or -	.00670	.57624 to .58965	.56954 to .59635	.56283 to .60306	11000
6	.58078	+ or -	.00665	.57412 to .58743	.56747 to .59408	.56082 to .60074	10500
7	.58104	+ or -	.00699	.57406 to .58803	.56707 to .59502	.56008 to .60201	10000
8	.58014	+ or -	.00731	.57284 to .58745	.56553 to .59475	.55823 to .60206	9500
9	.57841	+ or -	.00750	.57091 to .58592	.56340 to .59342	.55590 to .60092	9000
10	.57849	+ or -	.00796	.57053 to .58645	.56257 to .59441	.55461 to .60236	8500
11	.57568	+ or -	.00793	.56775 to .58361	.55983 to .59154	.55190 to .59946	8000
12	.57386	+ or -	.00825	.56561 to .58210	.55736 to .59035	.54911 to .59860	7500
17	.57925	+ or -	.00976	.56950 to .58901	.55974 to .59877	.54998 to .60852	5000
22	.56323	+ or -	.01045	.55278 to .57368	.54233 to .58413	.53188 to .59458	2500

FIGURE 6-11

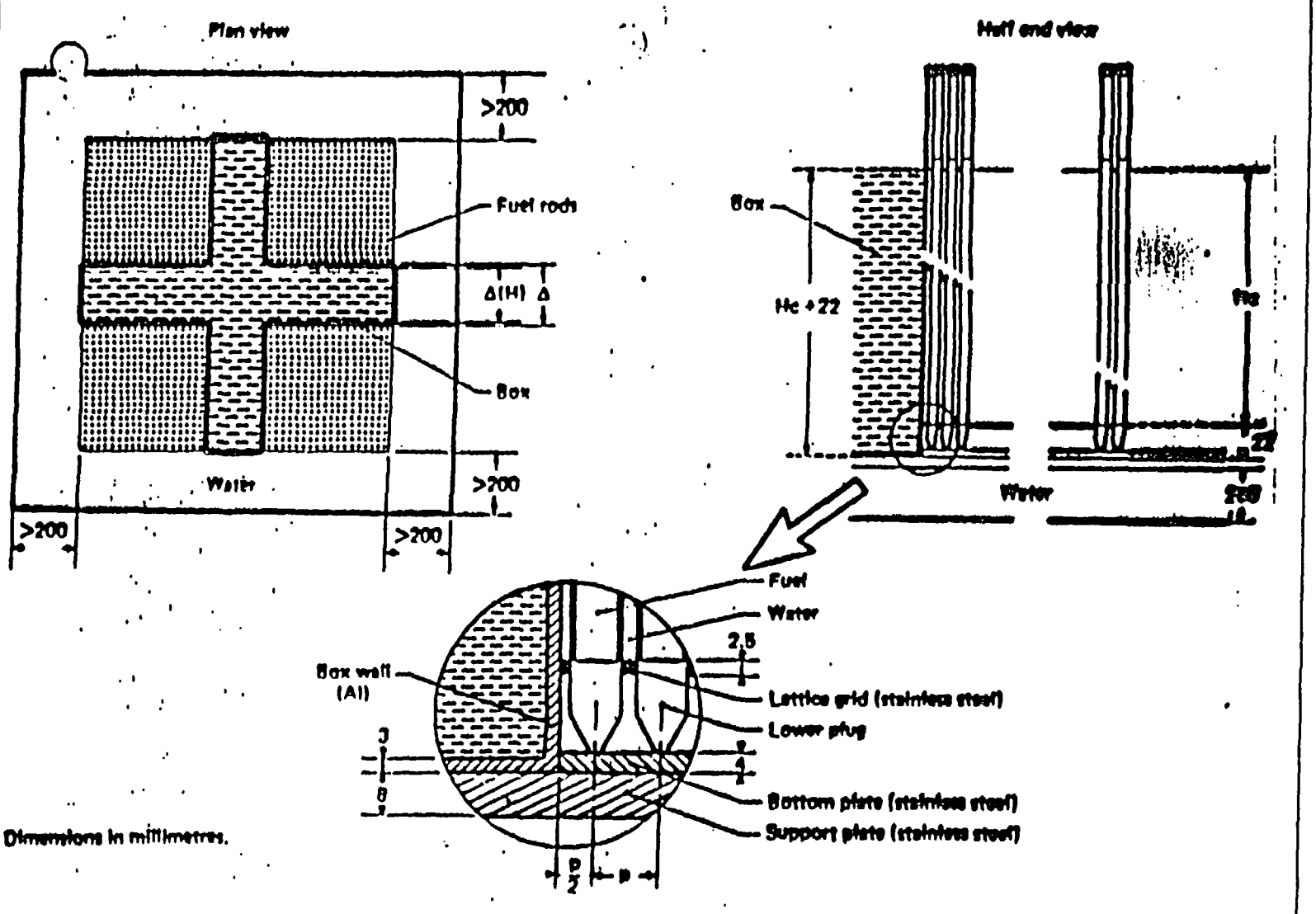
Plan view
>200
Fuel rods
Δ(H) Δ
Box
Water
>200
>200
>200
Half end view
Box
Hc + 22
Water
Fuel
Water
2,5
Box wall
(Al)
Lattice grid (stainless steel)
Lower plug
Bottom plate (stainless steel)
Support plate (stainless steel)
Dimensions in millimetres.

TABLE 6-2

Results of Experiments and Benchmark Calculations in the Case of Interposition of Hydrogeneous Compounds Between Four Assemblies of 18 X 18 (4.75%) UO_2 Rods at 13.5 mm Square Pitch

Experimental Results

Δ[a] (cm)		Compounds: Nature	Density (g/cm^3)	Concentration Hydrogen (g/cm^3)	Water Critical Height (mm)	Calculated Results: APOLLO-MORET $k_{eff} \pm 2+\sqrt{}$
0	1.	Water	1.0	0.1119	238 ± 0.6	1.010 ± 0.011
	2.	Box + air	0	0	290.3 ± 0.9	1.005 ± 0.010
	3.	Box + $(C_8H_8)n$	0.0323	0.0025	286.1 ± 0.8	0.987 ± 0.010
2.5	4.	Box + power $(CH_2)n$	0.2879	0.0414	269.8 ± 0.6	
	5.	Box + balls $(CH_2)n$	0.5540	0.0800	255.4 ± 0.6	0.995 ± 0.010
	6.	Box + water	1.0	0.1119	256.6 ± 0.7	
	7.	Water	1.0	0.1119	244.8 ± 0.6	1.006 ± 0.011
	8.	Box + air	0	0	344.8 ± 0.7	
	9.	Box + $(C_8H_8)n$	0.0262	0.0020	343.9 ± 0.8	
5.0	10.	Box + power $(CH_2)n$	0.3335	0.0480	301.6 ± 0.6	
	11.	Box + balls $(CH_2)n$	0.5796	0.0833	307.3 ± 0.8	
	12.	Box + water	1.0	0.1119	237.8 ± 0.8	
	13.	Water	1.0	0.1119	314.7 ± 0.6	1.000 ± 0.012
	14.	Box + air	0	0	460.8 ± 0.7	0.996 ± 0.010
	15.	Box + $(C_8H_8)n$	0.0288	0.0022	456.2 ± 0.8	0.987 ± 0.010
10.0	16.	Box + power $(CH_2)n$	0.3216	0.0464	420.5 ± 0.6	1.011 ± 0.012
	17.	Box + balls $(CH_2)n$	0.5680	0.0816	499.4 ± 0.6	1.010 ± 0.010
	18.	Box + water	1.0	0.1119	641.2 ± 0.9	
	19.	Water	1.0	0.1119	643.4 ± 0.8	

[a] The symbol Δ is the value of the gap width between the assemblies, thus it is the value of cross-shaped box width. the actual thickness of hydrogenous compounds is Δ (H) = Δ = 0.6 cm.

7. OPERATING PROCEDURES

Loading and unloading of the package are relatively simple, straight forward operations, however, detailed procedures and check lists are followed. Both UO_2 powder and UO_2 pellets are shipped in the UNC 2901 shipping container. The detailed procedures for loading and unloading powder and pellets will differ, but follow the same general approach. The requirements for loading and unloading the containers are described below.

7.1 Procedures for Loading the Package

Specific written operating procedures are followed. The procedures detail inspection requirements and acceptance criteria and require notification of line supervision when acceptance criteria are not met. Line supervision will notify Accountability, Health Physics, and the Plant Manager as appropriate. The procedures require the following as a minimum:

1. Detailed instructions for packaging of the specific items in the manner described in the approved drawings.

2. Inspection for damage prior to loading the container.

3. Inspection during loading and completion of a check list to assure the following internal items are properly installed:

   a. 14" square 1/2" thick steel flange.

   b. 14" square 1/8" thick full face gasket.

   c. 12 1/2-13 NC Hex Head Bolts which hold the flange and gasket in place.

   d. The one piece insert which includes a 22" diameter plywood piece, 22" diameter 1/8" thick ceramic sheet gasket, and a .032" thick aluminum cover.

4. Inspection of each inner container for:

   a. Soundness of container.
   b. Proper closure.
   c. Proper sealing.
   d. Proper net weight of uranium oxide.
   e. Other special requirements as appropriate.

8. ACCEPTANCE TESTS AND MAINTENANCE PROGRAM

Containers will be fabricated only in accordance with approved drawings and specifications. Source inspections will be performed as appropriate at the vendor's facility. Any changes in design which fall outside of the safety envelope specified in this application will be submitted to NRC for approval. Repair and maintenance will also be performed only in accordance with approved drawings and specifications.