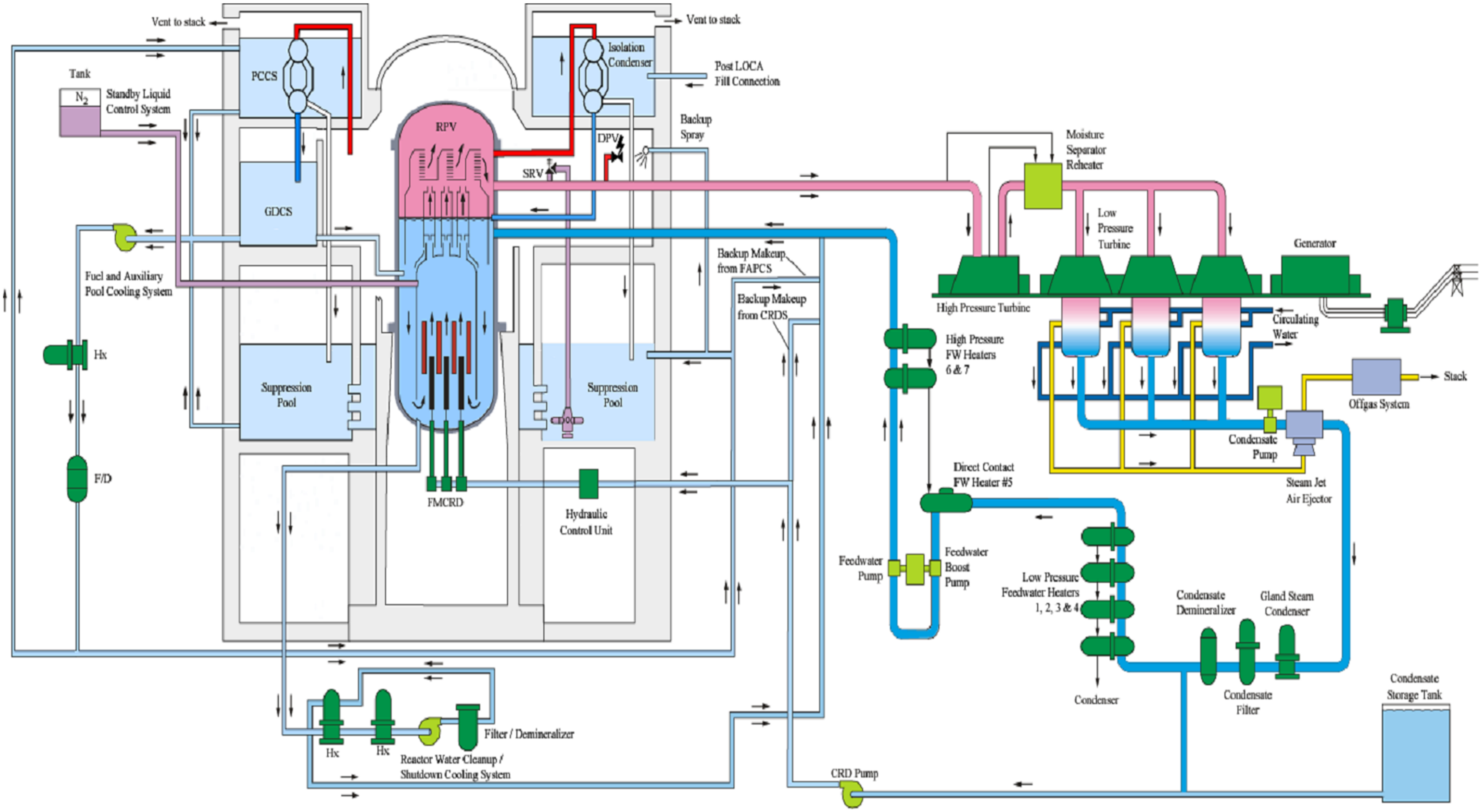
Vent to stack
Vent to stack
Tank
N_2
Standby Liquid Control System
PCCS
Isolation Condenser
Post LOCA Fill Connection
Backup Spray
RPV
DPV
SRV
GDCS
Moisture Separator Reheater
Low Pressure Turbine
Generator
Fuel and Auxiliary Pool Cooling System
Backup Makeup from FAPCS
Backup Makeup from CRDS
High Pressure Turbine
Circulating Water
Hx
High Pressure FW Heaters 6 & 7
Suppression Pool
Suppression Pool
Stack
Offgas System
Condensate Pump
F/D
Direct Contact FW Heater #5
Steam Jet Air Ejector
FMCRD
Hydraulic Control Unit
Feedwater Pump
Feedwater Boost Pump
Low Pressure Feedwater Heaters 1, 2, 3 & 4
Condensate Demineralizer
Gland Steam Condenser
Condenser
Condensate Filter
Condensate Storage Tank
Filter / Demineralizer
Hx
Hx
Reactor Water Cleanup / Shutdown Cooling System
CRD Pump