GE Nuclear Energy

26A6642BF
Revision 0
August 2005

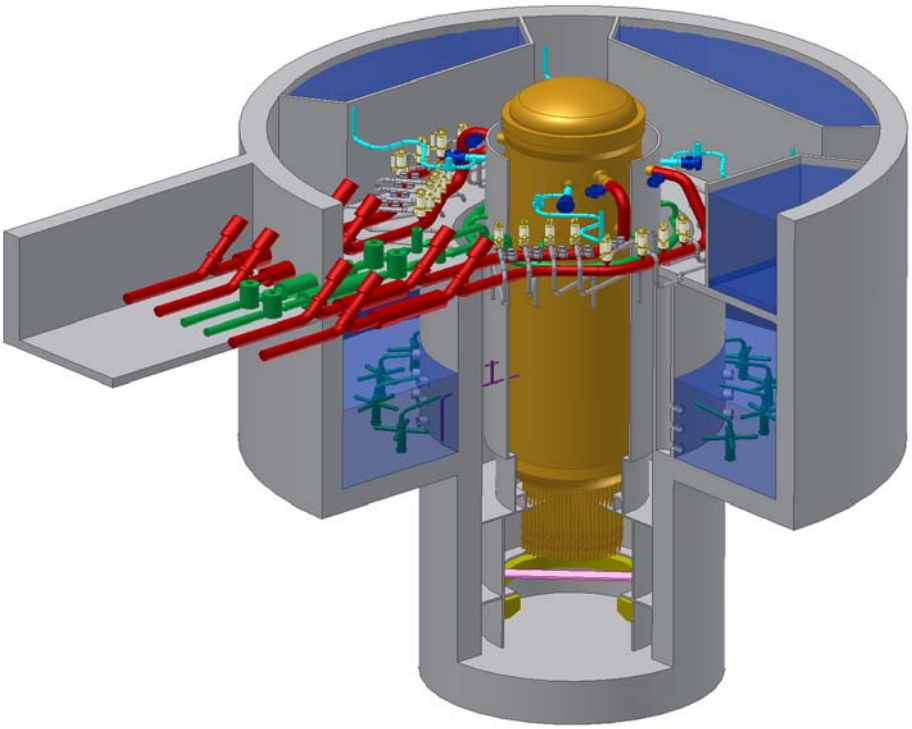

ESBWR Design Control Document

Tier 2

Chapter 10

Steam and Power Conversion System

(Conditional Release - pending closure of Design Verifications.)

Contents

10. Steam and Power Conversion System 10.1-1
10.1 Summary Description 10.1-1
10.1.1 Protective Features 10.1-2
10.1.2 COL Information 10.1-3
10.1.2.1 Design Features and Performance Characteristics of the Steam and Power Conversion System 10.1-3
10.1.3 References 10.1-3
10.2 Turbine Generator 10.2-1
10.2.1 Design Bases 10.2-1
10.2.1.1 Safety (10 CFR 50.2) Design Bases 10.2-1
10.2.1.2 Non-Safety Power Generation Design Bases 10.2-1
10.2.1.3 Functional Limitations Imposed by the Design or Operational Characteristics of the Reactor Coolant System 10.2-2
10.2.2 Description 10.2-2
10.2.2.1 General Description 10.2-2
10.2.2.2 Component Description 10.2-3
10.2.2.3 Normal Operation 10.2-6
10.2.2.4 Turbine Overspeed Protection System 10.2-6
10.2.2.5 Turbine Protection System 10.2-7
10.2.2.6 Turbine-Generator Supervisory Instruments 10.2-8
10.2.2.7 Testing 10.2-9
10.2.3 Turbine Integrity 10.2-10
10.2.3.1 Materials Selection 10.2-10
10.2.3.2 Fracture Toughness 10.2-10
10.2.3.3 High Temperature Properties 10.2-10
10.2.3.4 Pre-service Inspection 10.2-11
10.2.3.5 Inservice Inspection 10.2-11
10.2.4 Evaluation 10.2-12
10.2.5 COL Information 10.2-13
10.2.5.1 Low Pressure Turbine Disk Fracture Toughness 10.2-13
10.2.5.2 Turbine Design Overspeed 10.2-13
10.2.5.3 Turbine Inservice Test and Inspection 10.2-13
10.2.5.4 Extraction Non-return Values 10.2-13
10.2.6 References 10.2-13
10.3 Turbine Main Steam System 10.3-1
10.3.1 Design Bases 10.3-1
10.3.1.1 Safety (10 CFR 50.2) Design Bases 10.3-1
10.3.1.2 Non-Safety Power Generation Design Bases 10.3-1
10.3.2 Description 10.3-2
10.3.2.1 General Description 10.3-2
10.3.2.2 Component Description 10.3-2
10.3.2.3 System Operation 10.3-2
10.3.3 Evaluation 10.3-3

10.3.4 Inspection and Testing Requirements 10.3-3
10.3.5 Water Chemistry (PWR) 10.3-3
10.3.6 Steam and Feedwater System Materials 10.3-3
10.3.6.1 Fracture Toughness of Class 2 Components 10.3-3
10.3.6.2 Materials Selection and Fabrication 10.3-3
10.3.7 COL Information 10.3-4
10.3.7.1 Procedures to Avoid Steam Hammer and Discharge Loads 10.3-4
10.3.7.2 MSIV Leakage 10.3-4
10.3.7.3 Conformance with Regulatory Guide 1.71 ..... 10.3-4
10.3.8 References 10.3-4
10.4 Other Features of Steam and Power Conversion System 10.4-1
10.4.1 Main Condenser 10.4-1
10.4.1.1 Design Bases 10.4-1
10.4.1.2 Description 10.4-2
10.4.1.3 Evaluation 10.4-3
10.4.1.4 Tests and Inspections 10.4-4
10.4.1.5 Instrumentation Applications 10.4-4
10.4.2 Condenser Air Removal system 10.4-5
10.4.2.1 Design Bases 10.4-5
10.4.2.2 Description 10.4-6
10.4.2.3 Evaluation 10.4-6
10.4.2.4 Tests and Inspections 10.4-7
10.4.2.5 Instrumentation Applications 10.4-7
10.4.3 Turbine Gland Seal System 10.4-8
10.4.3.1 Design Bases 10.4-8
10.4.3.2 Description 10.4-8
10.4.3.3 Evaluation 10.4-9
10.4.3.4 Tests and Inspections 10.4-9
10.4.3.5 Instrumentation Application 10.4-10
10.4.4 Turbine Bypass System 10.4-11
10.4.4.1 Design Bases 10.4-11
10.4.4.2 Description 10.4-11
10.4.4.3 Evaluation 10.4-13
10.4.4.4 Inspection and Testing Requirements 10.4-13
10.4.4.5 Instrumentation Applications 10.4-13
10.4.5 Circulating Water System 10.4-13
10.4.5.1 Design Bases 10.4-13
10.4.5.2 Description 10.4-14
10.4.5.3 Evaluation 10.4-15
10.4.5.4 Tests and Inspections 10.4-15
10.4.5.5 Instrumentation Applications 10.4-15
10.4.5.6 Flood Protection 10.4-16
10.4.5.7 Portions of the CIRC Outside of Scope of ESBWR Standard Plant 10.4-17
10.4.5.8 Normal Power Heat Sink (Conceptual Design) 10.4-17
10.4.6 Condensate Purification System 10.4-17
10.4.6.1 Design Bases 10.4-17

10.4.6.2 System Description 10.4-18
10.4.6.3 Evaluation 10.4-20
10.4.6.4 Tests and Inspections 10.4-20
10.4.6.5 Instrumentation Applications 10.4-20
10.4.7 Condensate and Feedwater System 10.4-21
10.4.7.1 Design Bases 10.4-21
10.4.7.2 Description 10.4-22
10.4.7.3 Evaluation 10.4-25
10.4.7.4 Tests and Inspections 10.4-25
10.4.7.5 Instrumentation Applications 10.4-26
10.4.8 Steam Generator Blowdown System (PWR) 10.4-26
10.4.9 Auxiliary Feedwater System (PWR) 10.4-26
10.4.10 COL Information 10.4-26
10.4.10.1 Radiological Analysis of the TGSS Effluents 10.4-26
10.4.10.2 Turbine Bypass Valve Configuration 10.4-27
10.4.10.3 Applicability of Regulatory Guide 1.33 ..... 10.4-27
10.4.10.4 Circulating Water Flow 10.4-27
10A. Alternative design for Steam and Power Conversion System 1
10A.1 Abstract 1
10A.1.1 Protective Features 2
10A.1.2 COL Information 2
10A.1.3 References 2
10A.2 Turbine Generator 9
10A.2.1 Design Bases 9
10A.2.1.1 Safety (10 CFR 50.2) Design Bases 9
10A.2.1.2 Non-Safety Power Generation Design Bases 9
10A.2.1.3 Functional Limitations Imposed by the Design or Operational Characteristics of the Reactor Coolant System 9
10A.2.2 Description 9
10A.2.2.1 General Description 9
10A.2.2.2 Component Description 9
10A.2.2.3 Normal Operation 13
10A.2.2.4 Turbine Overspeed Protection System 13
10A.2.2.5 Turbine Protection System 13
10A.2.2.6 Turbine-Generator Supervisory Instruments 15
10A.2.2.7 Testing 15
10A.2.3 Turbine Integrity 15
10A.2.3.1 Materials Selection 15
10A.2.3.2 Fracture Toughness 15
10A.2.3.3 High Temperature Properties 16
10A.2.3.4 Turbine Design 16
10A.2.3.5 Pre-service Inspection 17
10A.2.3.6 Inservice Inspection 17
10A.2.4 Evaluation 23
10A.2.5 COL Information 23
10A.2.5.1 Low Pressure Turbine Disk Fracture Toughness 23

10A.2.5.2 Turbine Design Overspeed ... 23
10A.2.5.3 Turbine Inservice Test and Inspection ... 23
10A.2.5.4 Extraction Non-return Valves ... 23
10A.2.5.5 References ... 23
10A.3 Turbine Main Steam System ... 25
10A.3.1 Design Bases ... 25
10A.3.1.1 Safety (10 CFR 50.2) Design Bases ... 25
10A.3.1.2 Non-Safety Power Generation Design Bases ... 25
10A.3.2 Description ... 25
10A.3.2.1 General Description ... 25
10A.3.2.2 Component Description ... 25
10A.3.2.3 System Operation ... 25
10A.3.3 Evaluation ... 25
10A.3.4 Inspection and Testing Requirements ... 25
10A.3.5 Water Chemistry (PWR) ... 25
10A.3.6 Steam and Feedwater System Materials ... 25
10A.3.6.1 Fracture Toughness of Class 2 Components ... 26
10A.3.6.2 Materials Selection and Fabrication ... 26
10A.3.7 COL Information ... 26
10A.3.7.1 Procedures to Avoid Steam Hammer and Discharge Loads ... 26
10A.3.7.2 MSIV Leakage ... 26
10A.3.7.3 Conformance with Regulatory Guide 1.71 ... 26
10A.3.8 References ... 26
10A.4 Other Features of Steam and Power Conversion System ... 30
10A.4.1 Main Condenser ... 30
10A.4.1.1 Design Bases ... 30
10A.4.1.2 Description ... 30
10A.4.1.3 Evaluation ... 31
10A.4.1.4 Tests and Inspections ... 31
10A.4.1.5 Instrumentation Applications ... 31
10A.4.2 Condenser Air Removal system ... 31
10A.4.2.1 Design Bases ... 31
10A.4.2.2 Description ... 31
10A.4.2.3 Evaluation ... 31
10A.4.2.4 Tests and Inspections ... 31
10A.4.2.5 Instrumentation Applications ... 31
10A.4.3 Turbine Gland Seal System ... 32
10A.4.3.1 Design Bases ... 32
10A.4.3.2 Description ... 32
10A.4.3.3 Evaluation ... 32
10A.4.3.4 Tests and Inspections ... 33
10A.4.3.5 Instrumentation Application ... 33
10A.4.4 Turbine Bypass System ... 33
10A.4.4.1 Design Bases ... 33
10A.4.4.2 Description ... 33
10A.4.4.3 Evaluation ... 33

10A.4.4.4 Inspection and Testing Requirements 33
10A.4.4.5 Instrumentation Applications 33
10A.4.5 Circulating Water System 34
10A.4.5.1 Design Bases 34
10A.4.5.2 Description 34
10A.4.5.3 Evaluation 35
10A.4.5.4 Tests and Inspections 35
10A.4.5.5 Instrumentation Applications 35
10A.4.5.6 Flood Protection 35
10A.4.5.7 Portions of the CIRC Outside of Scope of ESBWR Standard Plant 35
10A.4.5.8 Normal Power Heat Sink (Conceptual Design) 35
10A.4.6 Condensate Purification System 35
10A.4.6.1 Design Bases 36
10A.4.6.2 System Description 36
10A.4.6.3 Evaluation 36
10A.4.6.4 Tests and Inspections 36
10A.4.6.5 Instrumentation Applications 36
10A.4.7 Condensate and Feedwater System 36
10A.4.7.1 Design Bases 36
10A.4.7.2 Description 36
10A.4.7.3 Evaluation 38
10A.4.7.4 Tests and Inspections 38
10A.4.7.5 Instrumentation Applications 38
10A.4.8 Steam Generator Blowdown System (PWR) 38
10A.4.9 Auxiliary Feedwater System (PWR) 38
10A.4.10 COL Information 38
10A.4.10.1 Radiological Analysis of the TGSS Effluents 38
10A.5 Turbine Building Simplified general Arrangement Drawings 58

List of Tables

Table 10.1-1 Summary of Important Design Features and Performance Characteristics of the Steam and Power Conversion System
Table 10.3-1 Turbine Main Steam System Design Data
Table 10.4-1 Main Condenser Data
Table 10.4-2 Condenser Air Removal System
Table 10.4-3 Circulating Water System
Table 10.4-4 Condensate Purification System
Table 10.4-5 Condensate and Feedwater System Data
Table 10.4-6 Condensate and Feedwater System Component Failure Analysis
Table 10A.1-1 Summary of Important Design Features and Performance Characteristics of the Steam and Power Conversion System
Table 10A.3-1 Turbine Main Steam System Design Data
Table 10A.4-1 Main Condenser Data
Table 10A.4-2 Condenser Air Removal system
Table 10A.4-3 Circulating Water System
Table 10A.4-4 Condensate Purification System
Table 10A.4-5 Condensate and Feedwater System Data
Table 10A.4-6 Condensate and Feedwater System Component Failure Analysis

List of Illustrations

Figure 10.1-1. Power Cycle Schematic
Figure 10.1-2. Rated Heat Balance (S.I. Units)
Figure 10.1-2. Rated Heat Balance (U.S. Units)
Figure 10.1-3. Valves Wide Open-Heat Balance (S.I. Units)
Figure 10.1-3. Valves Wide Open-Heat Balance (U.S. Units)
Figure 10.2-1. Turbine Stop Valve Closure Characteristic
Figure 10.2-2. Turbine Control Valve Fast Closure Characteristic
Figure 10.2-3. Acceptable Range for Control Valve Normal Closure Motion
Figure 10.2-4. Generator Hydrogen and CO_2 System
Figure 10.3-1. Turbine Main Steam System
Figure 10.3-2. Main Turbine System
Figure 10.4-1. Circulating Water System
Figure 10.4-2. Condensate and Feedwater System
Figure 10.4-3. Condenser Air Removal system
Figure 10.4-4. Turbine Gland Seal System
Figure 10.4-5. Turbine Bypass System
Figure 10.4-6. Signal Flow Chart for Turbine Bypass Control Unit
Figure 10.4-7. Condensate Purification System
Figure 10.4-8. LP Extraction Steam Drains and Vent Systems
Figure 10.4-9. HP Extraction Steam Drains and Vent Systems
Figure 10A.1-1. Power Cycle Schematic
Figure 10A.1-2. Rated Heat Balance
Figure 10A.1-3. Valves Wide Open - Heat Balance
Figure 10A.2-1. Turbine Stop Valve Closure Characteristic
Figure 10A.2-2. Turbine Control Valve Fast Closure Characteristic
Figure 10A.2-3. Acceptable Range for Control Valve Normal Closure Motion
Figure 10A.2-4. Generator Hydrogen and CO_2 System
Figure 10A.3-1. Turbine Main Steam System
Figure 10A.3-2. Main Turbine System
Figure 10A.4-1. Circulating Water System
Figure 10A.4-2 Condensate System
Figure 10A.4-3. Condenser Air Removal System
Figure 10A.4-4. Turbine Gland Seal System
Figure 10A.4-5. Not Used
Figure 10A.4-6. Signal Flow Chart for Turbine Bypass Control Unit
Figure 10A.4-7. Condensate Purification System
Figure 10A.4-8. Feedwater System
Figure 10A.4-9. LP Extraction Steam Drains and Vent Systems
Figure 10A.4-10. HP Extraction Steam Drains and Vent Systems
Figure 10A.4-11. Turbine Bypass System
Figure 10A.5-1. Turbine Building Plan View. Elevation -1400
Figure 10A.5-2. Turbine Building Plan View. Elevation - 4650
Figure 10A.5-3. Turbine Building Plan View. Elevation - 12000
Figure 10A.5-4. Turbine Building Plan View. Elevation - 22000

Figure 10A.5-5. Turbine Building Plan View. Elevation - 27000
Figure 10A.5-6. Turbine Building Longitudinal Section in front of Turbine Generator Set

Abbreviations And Acronyms

Term	Definition
10 CFR	Title 10, Code of Federal Regulations
A/D	Analog-to-Digital
AASHTO	American Association of Highway and Transportation Officials
AB	Auxiliary Boiler
ABS	Auxiliary Boiler System
ABWR	Advanced Boiling Water Reactor
ac / AC	Alternating Current
AC	Air Conditioning
ACF	Automatic Control Function
ACI	American Concrete Institute
ACS	Atmospheric Control System
AD	Administration Building
ADS	Automatic Depressurization System
AEC	Atomic Energy Commission
AFIP	Automated Fixed In-Core Probe
AGMA	American Gear Manufacturer's Association
AHS	Auxiliary Heat Sink
AISC	American Institute of Steel Construction
AISI	American Iron and Steel Institute
AL	Analytical Limit
ALARA	As Low As Reasonably Achievable
ALWR	Advanced Light Water Reactor
ANS	American Nuclear Society
ANSI	American National Standards Institute
AOO	Anticipated Operational Occurrence
AOV	Air Operated Valve
API	American Petroleum Institute
APRM	Average Power Range Monitor
APR	Automatic Power Regulator
APRS	Automatic Power Regulator System
ARI	Alternate Rod Insertion
ARMS	Area Radiation Monitoring System
ASA	American Standards Association
ASD	Adjustable Speed Drive
ASHRAE	American Society of Heating, Refrigerating, and Air Conditioning Engineers
ASME	American Society of Mechanical Engineers
AST	Alternate Source Term
ASTM	American Society of Testing Methods

Abbreviations And Acronyms

Term	Definition
AT	Unit Auxiliary Transformer
ATLM	Automated Thermal Limit Monitor
ATWS	Anticipated Transients Without Scram
AV	Allowable Value
AWS	American Welding Society
AWWA	American Water Works Association
B&PV	Boiler and Pressure Vessel
BAF	Bottom of Active Fuel
BHP	Brake Horse Power
BOP	Balance of Plant
BPU	Bypass Unit
BPWS	Banked Position Withdrawal Sequence
BRE	Battery Room Exhaust
BRL	Background Radiation Level
BTP	NRC Branch Technical Position
BTU	British Thermal Unit
BWR	Boiling Water Reactor
BWROG	Boiling Water Reactor Owners Group
CAV	Cumulative absolute velocity
C&FS	Condensate and Feedwater System
C&I	Control and Instrumentation
C/C	Cooling and Cleanup
CB	Control Building
CBGAHVS	Control Building General Area
CBHVAC	Control Building HVAC
CBHVS	Control Building Heating, Ventilation and Air Conditioning System
CCI	Core-Concrete Interaction
CDF	Core Damage Frequency
CFR	Code of Federal Regulations
CIRC	Circulating Water System
CIS	Containment Inerting System
CIV	Combined Intermediate Valve
CLAVS	Clean Area Ventilation Subsystem of Reactor Building HVAC
CM	Cold Machine Shop
CMS	Containment Monitoring System
CMU	Control Room Multiplexing Unit
COL	Combined Operating License
COLR	Core Operating Limits Report
CONAVS	Controlled Area Ventilation Subsystem of Reactor Building HVAC

Abbreviations And Acronyms

Term	Definition
CPR	Critical Power Ratio
CPS	Condensate Purification System
CPU	Central Processing Unit
CR	Control Rod
CRD	Control Rod Drive
CRDA	Control Rod Drop Accident
CRDH	Control Rod Drive Housing
CRDHS	Control Rod Drive Hydraulic System
CRGT	Control Rod Guide Tube
CRHA	Control Room Habitability Area
CRHAHVS	Control Room Habitability Area HVAC Sub-system
CRT	Cathode Ray Tube
CS&TS	Condensate Storage and Transfer System
CSDM	Cold Shutdown Margin
CS / CST	Condensate Storage Tank
CT	Main Cooling Tower
CTVCF	Constant Voltage Constant Frequency
CUF	Cumulative usage factor
CWS	Chilled Water System
D-RAP	Design Reliability Assurance Program
DAC	Design Acceptance Criteria
DAW	Dry Active Waste
DBA	Design Basis Accident
dc / DC	Direct Current
DCS	Drywell Cooling System
DCIS	Distributed Control and Information System
DEPSS	Drywell Equipment and Pipe Support Structure
DF	Decontamination Factor
D/F	Diaphragm Floor
DG	Diesel-Generator
DHR	Decay Heat Removal
DM&C	Digital Measurement and Control
DOF	Degree of freedom
DOI	Dedicated Operators Interface
DOT	Department of Transportation
dPT	Differential Pressure Transmitter
DPS	Diverse Protection System
DPV	Depressurization Valve
DR&T	Design Review and Testing

Abbreviations And Acronyms

Term	Definition
DS	Independent Spent Fuel Storage Installation
DTM	Digital Trip Module
DW	Drywell
EB	Electrical Building
EBAS	Emergency Breathing Air System
EBHV	Electrical Building HVAC
ECCS	Emergency Core Cooling System
E-DCIS	Essential DCIS (Distributed Control and Information System)
EDO	Environmental Qualification Document
EFDS	Equipment and Floor Drainage System
EFPY	Effective full power years
EFU	Emergency Filter Unit
EHC	Electrohydraulic Control (Pressure Regulator)
ENS	Emergency Notification System
EOC	Emergency Operations Center
EOC	End of Cycle
EOF	Emergency Operations Facility
EOP	Emergency Operating Procedures
EPDS	Electric Power Distribution System
EPG	Emergency Procedure Guidelines
EPRI	Electric Power Research Institute
EQ	Environmental Qualification
ERICP	Emergency Rod Insertion Control Panel
ERIP	Emergency Rod Insertion Panel
ESF	Engineered Safety Feature
ETS	Emergency Trip System
FAC	Flow-Accelerated Corrosion
FAPCS	Fuel and Auxiliary Pools Cooling System
FATT	Fracture Appearance Transition Temperature
FB	Fuel Building
FBHV	Fuel Building HVAC
FCI	Fuel-Coolant Interaction
FCM	File Control Module
FCS	Flammability Control System
FCU	Fan Cooling Unit
FDDI	Fiber Distributed Data Interface
FFT	Fast Fourier Transform
FFWTR	Final Feedwater Temperature Reduction
FHA	Fire Hazards Analysis

Abbreviations And Acronyms

Term	Definition
FIV	Flow-Induced Vibration
FMCRD	Fine Motion Control Rod Drive
FMEA	Failure Modes and Effects Analysis
FPS	Fire Protection System
FO	Diesel Fuel Oil Storage Tank
FOAKE	First-of-a-Kind Engineering
FPE	Fire Pump Enclosure
FTDC	Fault-Tolerant Digital Controller
FTS	Fuel Transfer System
FW	Feedwater
FWCS	Feedwater Control System
FWS	Fire Water Storage Tank
GCS	Generator Cooling System
GDC	General Design Criteria
GDCS	Gravity-Driven Cooling System
GE	General Electric Company
GE-NE	GE Nuclear Energy
GEN	Main Generator System
GETAB	General Electric Thermal Analysis Basis
GL	Generic Letter
GM	Geiger-Mueller Counter
GM-B	Beta-Sensitive GM Detector
GSIC	Gamma-Sensitive Ion Chamber
GSOS	Generator Sealing Oil System
GWSR	Ganged Withdrawal Sequence Restriction
HAZ	Heat-Affected Zone
HCU	Hydraulic Control Unit
HCW	High Conductivity Waste
HDVS	Heater Drain and Vent System
HEI	Heat Exchange Institute
HELB	High Energy Line Break
HEP	Human error probability
HEPA	High Efficiency Particulate Air/Absolute
HFE	Human Factors Engineering
HFF	Hollow Fiber Filter
HGCS	Hydrogen Gas Cooling System
HIC	High Integrity Container
HID	High Intensity Discharge
HIS	Hydraulic Institute Standards

Abbreviations And Acronyms

Term	Definition
HM	Hot Machine Shop & Storage
HP	High Pressure
HPNSS	High Pressure Nitrogen Supply System
HPT	High-pressure turbine
HRA	Human Reliability Assessment
HSI	Human-System Interface
HSSS	Hardware/Software System Specification
HVAC	Heating, Ventilation and Air Conditioning
HVS	High Velocity Separator
HWC	Hydrogen Water Chemistry
HWCS	Hydrogen Water Chemistry System
HWS	Hot Water System
HX	Heat Exchanger
I&C	Instrumentation and Control
I/O	Input/Output
IAS	Instrument Air System
IASCC	Irradiation Assisted Stress Corrosion Cracking
IBC	International Building Code
IC	Ion Chamber
IC	Isolation Condenser
ICD	Interface Control Diagram
ICS	Isolation Condenser System
IE	Inspection and Enforcement
IEB	Inspection and Enforcement Bulletin
IED	Instrument and Electrical Diagram
IEEE	Institute of Electrical and Electronic Engineers
IFTS	Inclined Fuel Transfer System
IGSCC	Intergranular Stress Corrosion Cracking
IIS	Iron Injection System
ILRT	Integrated Leak Rate Test
IOP	Integrated Operating Procedure
IMC	Induction Motor Controller
IMCC	Induction Motor Controller Cabinet
IRM	Intermediate Range Monitor
ISA	Instrument Society of America
ISI	In-Service Inspection
ISLT	In-Service Leak Test
ISM	Independent Support Motion
ISMA	Independent Support Motion Response Spectrum Analysis

Abbreviations And Acronyms

Term	Definition
ISO	International Standards Organization
ITA	Inspections, Tests or Analyses
ITAAC	Inspections, Tests, Analyses and Acceptance Criteria
ITA	Initial Test Program
LAPP	Loss of Alternate Preferred Power
LCO	Limiting Conditions for Operation
LCW	Low Conductivity Waste
LD	Logic Diagram
LDA	Lay down Area
LD&IS	Leak Detection and Isolation System
LERF	Large early release frequency
LFCV	Low Flow Control Valve
LHGR	Linear Heat Generation Rate
LLRT	Local Leak Rate Test
LMU	Local Multiplexer Unit
LO	Dirty/Clean Lube Oil Storage Tank
LOCA	Loss-of-Coolant-Accident
LOFW	Loss-of-feedwater
LOOP	Loss of Offsite Power
LOPP	Loss of Preferred Power
LP	Low Pressure
LPCI	Low Pressure Coolant Injection
LPCRD	Locking Piston Control Rod Drive
LPMS	Loose Parts Monitoring System
LPRM	Local Power Range Monitor
LPSP	Low Power Setpoint
LSB	Last Stage Bucket
LWMS	Liquid Waste Management System
MAAP	Modular Accident Analysis Program
MAPLHGR	Maximum Average Planar Linear Head Generation Rate
MAPRAT	Maximum Average Planar Ratio
MBB	Motor Built-In Brake
MCC	Motor Control Center
MCES	Main Condenser Evacuation System
MCPR	Minimum Critical Power Ratio
MCR	Main Control Room
MCRP	Main Control Room Panel
MELB	Moderate Energy Line Break
MLHGR	Maximum Linear Heat Generation Rate

Abbreviations And Acronyms

Term	Definition
MMI	Man-Machine Interface
MMIS	Man-Machine Interface Systems
MOV	Motor-Operated Valve
MPC	Maximum Permissible Concentration
MPI	Magnetic Particle Inspection
MPL	Master Parts List
MS	Main Steam
MSIV	Main Steam Isolation Valve
MSL	Main Steamline
MSLB	Main Steamline Break
MSLBA	Main Steamline Break Accident
MSR	Moisture Separator Reheater
MSV	Mean Square Voltage
MT	Main Transformer
MTTR	Mean Time To Repair
MWS	Makeup Water System
NBR	Nuclear Boiler Rated
NBS	Nuclear Boiler System
NCIG	Nuclear Construction Issues Group
NDE	Nondestructive Examination
NE-DCIS	Non-Essential Distributed Control and Information System
NDRC	National Defense Research Committee
NDT	Nil Ductility Temperature
NFPA	National Fire Protection Association
NIST	National Institute of Standard Technology
NICWS	Nuclear Island Chilled Water Subsystem
NMS	Neutron Monitoring System
NOV	Nitrogen Operated Valve
NPHS	Normal Power Heat Sink
NPSH	Net Positive Suction Head
NRC	Nuclear Regulatory Commission
NRHX	Non-Regenerative Heat Exchanger
NS	Non-seismic (non-seismic Category I)
NSSS	Nuclear Steam Supply System
NT	Nitrogen Storage Tank
NTSP	Nominal Trip Setpoint
O&M	Operation and Maintenance
O-RAP	Operational Reliability Assurance Program
OBCV	Overboard Control Valve

Abbreviations And Acronyms

Term	Definition
OBE	Operating Basis Earthquake
OGS	Offgas System
OHLHS	Overhead Heavy Load Handling System
OIS	Oxygen Injection System
OLMCPR	Operating Limit Minimum Critical Power Ratio
OLU	Output Logic Unit
OOS	Out-of-service
ORNL	Oak Ridge National Laboratory
OSC	Operational Support Center
OSHA	Occupational Safety and Health Administration
OSI	Open Systems Interconnect
P&ID	Piping and Instrumentation Diagram
PA/PL	Page/Party-Line
PABX	Private Automatic Branch (Telephone) Exchange
PAM	Post Accident Monitoring
PAR	Passive Autocatalytic Recombiner
PAS	Plant Automation System
PASS	Post Accident Sampling Subsystem of Containment Monitoring System
PCC	Passive Containment Cooling
PCCS	Passive Containment Cooling System
PCT	Peak cladding temperature
PCV	Primary Containment Vessel
PFD	Process Flow Diagram
PGA	Peak Ground Acceleration
PGCS	Power Generation and Control Subsystem of Plant Automation System
PH	Pump House
PL	Parking Lot
PM	Preventive Maintenance
PMCS	Performance Monitoring and Control Subsystem of NE-DCIS
PMF	Probable Maximum Flood
PMP	Probable Maximum Precipitation
PQCL	Product Quality Check List
PRA	Probabilistic Risk Assessment
PRMS	Process Radiation Monitoring System
PRNM	Power Range Neutron Monitoring
PS	Plant Stack
PSD	Power Spectra Density
PSS	Process Sampling System
PSWS	Plant Service Water System

Abbreviations And Acronyms

Term	Definition
PT	Pressure Transmitter
PWR	Pressurized Water Reactor
QA	Quality Assurance
RACS	Rod Action Control Subsystem
RAM	Reliability, Availability and Maintainability
RAPI	Rod Action and Position Information
RAT	Reserve Auxiliary Transformer
RB	Reactor Building
RBC	Rod Brake Controller
RBCC	Rod Brake Controller Cabinet
RBCWS	Reactor Building Chilled Water Subsystem
RBHV	Reactor Building HVAC
RBS	Rod Block Setpoint
RBV	Reactor Building Vibration
RC&IS	Rod Control and Information System
RCC	Remote Communication Cabinet
RCCV	Reinforced Concrete Containment Vessel
RCCWS	Reactor Component Cooling Water System
RCPB	Reactor Coolant Pressure Boundary
RCS	Reactor Coolant System
RDA	Rod Drop Accident
RDC	Resolver-to-Digital Converter
REPAVS	Refueling and Pool Area Ventilation Subsystem of Fuel Building HVAC
RFP	Reactor Feed Pump
RG	Regulatory Guide
RHR	Residual heat removal (function)
RHX	Regenerative Heat Exchanger
RMS	Root Mean Square
RMS	Radiation Monitoring Subsystem
RMU	Remote Multiplexer Unit
RO	Reverse Osmosis
ROM	Read-only Memory
RPS	Reactor Protection System
RPV	Reactor Pressure Vessel
RRPS	Reference Rod Pull Sequence
RSM	Rod Server Module
RSPC	Rod Server Processing Channel
RSS	Remote Shutdown System
RSSM	Reed Switch Sensor Module

Abbreviations And Acronyms

Term	Definition
RSW	Reactor Shield Wall
RTIF	Reactor Trip and Isolation Function(s)
RT_{NDT}	Reference Temperature of Nil-Ductility Transition
RTP	Reactor Thermal Power
RW	Radwaste Building
RWBCR	Radwaste Building Control Room
RWBGA	Radwaste Building General Area
RWBHVAC	Radwaste Building HVAC
RWCU/SDC	Reactor Water Cleanup/Shutdown Cooling
RWE	Rod Withdrawal Error
RWM	Rod Worth Minimizer
SA	Severe Accident
SAR	Safety Analysis Report
SB	Service Building
S/C	Digital Gamma-Sensitive GM Detector
SC	Suppression Chamber
S/D	Scintillation Detector
S/DRSRO	Single/Dual Rod Sequence Restriction Override
S/N	Signal-to-Noise
S/P	Suppression Pool
SAS	Service Air System
SB&PC	Steam Bypass and Pressure Control System
SBO	Station Blackout
SBWR	Simplified Boiling Water Reactor
SCEW	System Component Evaluation Work
SCRRI	Selected Control Rod Run-in
SDC	Shutdown Cooling
SDM	Shutdown Margin
SDS	System Design Specification
SEOA	Sealed Emergency Operating Area
SER	Safety Evaluation Report
SF	Service Water Building
SFP	Spent fuel pool
SIL	Service Information Letter
SIT	Structural Integrity Test
SIU	Signal Interface Unit
SJAE	Steam Jet Air Ejector
SLC	Standby Liquid Control
SLCS	Standby Liquid Control System

Abbreviations And Acronyms

Term	Definition
SLMCPR	Safety Limit Minimum Critical Power Ratio
SMU	SSLC Multiplexing Unit
SOV	Solenoid Operated Valve
SP	Setpoint
SPC	Suppression Pool Cooling
SPDS	Safety Parameter Display System
SPTMS	Suppression Pool Temperature Monitoring Subsystem of Containment Monitoring System
SR	Surveillance Requirement
SRM	Source Range Monitor
SRNM	Startup Range Neutron Monitor
SRO	Senior Reactor Operator
SRP	Standard Review Plan
SRS	Software Requirements Specification
SRSRO	Single Rod Sequence Restriction Override
SRSS	Sum of the squares
SRV	Safety Relief Valve
SRVDL	Safety relief valve discharge line
SSAR	Standard Safety Analysis Report
SSC(s)	Structure, System and Component(s)
SSE	Safe Shutdown Earthquake
SSLC	Safety System Logic and Control
SSPC	Steel Structures Painting Council
ST	Spare Transformer
STP	Sewage Treatment Plant
STRAP	Scram Time Recording and Analysis Panel
STRP	Scram Time Recording Panel
SV	Safety Valve
SWH	Static water head
SWMS	Solid Waste Management System
SY	Switch Yard
TAF	Top of Active Fuel
TASS	Turbine Auxiliary Steam System
TB	Turbine Building
TBCE	Turbine Building Compartment Exhaust
TEAS	Turbine Building Air Supply
TBE	Turbine Building Exhaust
TBLOE	Turbine Building Lube Oil Area Exhaust
TBS	Turbine Bypass System
TBHV	Turbine Building HVAC

Abbreviations And Acronyms

Term	Definition
TBV	Turbine Bypass Valve
TC	Training Center
TCCWS	Turbine Component Cooling Water System
TCS	Turbine Control System
TCV	Turbine Control Valve
TDH	Total Developed Head
TEMA	Tubular Exchanger Manufacturers' Association
TFSP	Turbine first stage pressure
TG	Turbine Generator
TGSS	Turbine Gland Seal System
THA	Time-history accelerograph
TLOS	Turbine Lubricating Oil System
TLU	Trip Logic Unit
TMI	Three Mile Island
TMSS	Turbine Main Steam System
TRM	Technical Requirements Manual
TS	Technical Specification(s)
TSC	Technical Support Center
TSI	Turbine Supervisory Instrument
TSV	Turbine Stop Valve
UBC	Uniform Building Code
UHS	Ultimate heat sink
UL	Underwriter's Laboratories Inc.
UPS	Uninterruptible Power Supply
USE	Upper Shelf Energy
USM	Uniform Support Motion
USMA	Uniform support motion response spectrum analysis
USNRC	United States Nuclear Regulatory Commission
USS	United States Standard
UV	Ultraviolet
V&V	Verification and Validation
Vac / VAC	Volts Alternating Current
Vdc / VDC	Volts Direct Current
VDU	Video Display Unit
VW	Vent Wall
VWO	Valves Wide Open
WD	Wash Down Bays
WS	Water Storage

10. STEAM AND POWER CONVERSION SYSTEM

10.1 SUMMARY DESCRIPTION

The steam and power conversion system has no primary safety-related function. The components of the steam and power conversion system are designed to produce electrical power utilizing the steam generated by the reactor, condense the steam into water, and return the water to the reactor as heated feedwater, with a major portion of its gaseous, dissolved and particulate impurities removed in order to satisfy the reactor water quality requirements.

The steam and power conversion system includes the turbine main steam system, the main turbine generator, main condenser, main condenser air removal system, turbine gland seal system, turbine bypass system, extraction steam system, condensate purification system, and the condensate and feedwater pumping and heating system. The heat rejected to the main condenser is removed by a circulating water system and discharged to the normal power heat sink.

Steam, generated in the reactor, is supplied to the high-pressure turbine and the second stage reheater of the steam moisture separators/reheaters. Steam leaving the high-pressure turbine passes through a combined moisture separator/reheater prior to entering the low-pressure turbines. The moisture separator drains, steam reheater drains, and the drains from the two high-pressure feedwater heaters are drained to the direct contact feedwater heater which is combined with a feedwater storage tank. The reactor feedwater pumps take suction from the direct contact feedwater heater storage tank. The low-pressure feedwater heater drains are cascaded to the condenser.

Steam exhausted from the low-pressure turbines is condensed and deaerated in the condenser. The condensate pumps take suction from the condenser hotwell and deliver the condensate through filters and demineralizers, gland steam condenser, steam jet air ejector condenser, off-gas recombiner condensers, and through the low-pressure feedwater heaters to the direct contact feedwater heater storage tank. The reactor feed pumps discharge through the high-pressure feedwater heaters to the reactor.

The important steam and power conversion system design features are summarized in Table 10.1-1. The main conceptual features are illustrated on Figure 10.1-1, assuming a triple pressure condenser. This type of condenser and other site dependent ESBWR plant features and parameters are reported herein based on typical central U.S. site conditions. They are given here to more completely define the ESBWR Turbine Island standard design and to be used as references in reviewing future ESBWR plant-specific licensing submittals, and confirming that such submittals are indeed consistent with the standard design. Nothing in the ESBWR Standard Plant design is meant to preclude the use of a once through cooling system and a single pressure condenser nor do such changes affect the Nuclear Island.

Normally, the turbine power heat cycle utilizes all the steam being generated by the reactor; however, an automatic pressure-controlled turbine bypass system designed for 110% of the rated steam flow is provided to discharge excess steam directly to the condenser.

Individual components of the steam and power conversion system are based on proven conventional designs suitable for use in large, central station power plants.

All auxiliary equipment is sized for the maximum calculated unit capability with turbine valves wide open.

Table 10-1 show the as-designed steam and power conversion system heat input available from the Nuclear Steam Supply System (NSSS) when the reactor core is generating its rated output. The steam and power conversion system is designed to operate at 105% of rated turbine throttle flow (assumed to correspond to turbine valves wide open).

The inlet pressure at the turbine main steam valves reflect reactor power, steam line flow and pressure regulator programming but never exceed the pressure for which the turbine components and steam lines are designed.

The necessary biological shielding for personnel protection is provided for all radiation producing components of the steam and power conversion system including the main turbines, moisture separators, feedwater heaters, condenser and steam jet air ejector.

The rated and valves-wide open flow quantities and fluid energy levels are shown on the turbine cycle heat balances, Figures 10.1-2 and 10.1-3, respectively. These heat balances are based on conservative circulating water temperature conditions for the reference design. The actual electrical outputs for rated generator power can therefore vary depending on site specific conditions existing at any given time (See Subsection 10.1.2.1 for COL Information).

The majority of the steam and power conversion system is located in the turbine building, which is a Seismic Category II, nonsafety-related building.

Nonsafety-related instrumentation is provided to measure flow, pressure, differential pressure, temperature, and level throughout the steam feedwater and condensate system. The instrumentation provides input signals to the plant computer, recorders and control systems that maintain the normal operation of the plant.

Safety-related instrumentation is provided to measure pressure in the turbine main steam header and pressure in the main condenser, the main turbine stop valve positions, hydraulic pressure of the turbine control valves, and the bypass valve positions. There are four Class 1E position limit switches at each bypass valve. These signals go to each division of Reactor Protection System (RPS) for the purpose of verifying that the bypass valves are opening after a full load rejection or turbine trip.

10.1.1 Protective Features

Loss of External Electrical Load and/or Turbine Trip

Load rejection capabilities of the steam and power conversion systems are discussed in Subsection 10.4.4.

Overpressure Protection

The following components are provided with overpressure protection in accordance with the ASME Boiler and Pressure Vessel Code, Section VIII:

- Moisture separator/reheater vessels and drain tanks;
- Selected low-pressure feedwater heaters;
- The high-pressure feedwater heaters; and

- Direct contact feedwater heater storage tank

Turbine Overspeed Protection

Turbine overspeed protection is discussed in Subsection 10.2.2.4.

Turbine Integrity

Turbine integrity is discussed in Subsections 3.5.1 and 10.2.3.

10.1.2 COL Information

10.1.2.1 Design Features and Performance Characteristics of the Steam and Power Conversion System

Potential variation in parameters such as feedwater temperature, alternate last-stage bucket (LSB), condenser vacuum, alternate condenser design and the resulting generator output, may be considered in COL phase based on site data and Utility specific needs.

10.1.3 References

None.

Table 10.1-1

Summary of Important Design Features and Performance Characteristics of the Steam and Power Conversion System

Parameter	**Value ****
Nuclear Steam Supply, Full Power Operation:	
Rated reactor core power, (MWt)	4500
Design NSSS power, (MWt)	4492.3
Reactor steam outlet pressure, MPa (psia)	7.17 (1,040)
Reactor rated steam flow, kg/s (lb/hr)	2432.6 (19.3×10^6)
Reactor nominal outlet steam moisture, %	0.1
Reactor inlet feedwater temp, °C (°F)	≥ 215.6 (420)
Turbine-Generator:	
Nominal Rating, (MWe)	Estimated 1550 – 1650
Turbine type	Tandem compound, six flow, 132-cm (52-in) last-stage bucket (LSB)
Operating speed, (rpm)	1800
Turbine throttle steam pressure, MPa (psia)	6.63 (961)
Throttle steam nominal moisture, (%)	0.5
Moisture Separator/Reheaters (MSRs):	
Number of MSRs per unit	2
Stages of moisture separation	1
Stages of reheater	2
Main Condenser:	
Type	Multiple pressure
Design duty, MW (Btu/hr)	~ 2941 (10^{10})
Circulating water flow rate, m^3/s (gpm)	~ 42.5 (67.4×10^4)
Circulating water temperature rise, °C (°F)	~ 16.5 (29.7)
Condensate Pumps:	
Number of pumps	4
Pump type	Fixed speed, centrifugal, vertical can type
Driver type	Motor driven

Table 10.1-1

Summary of Important Design Features and Performance Characteristics of the Steam and Power Conversion System

Parameter	Value **
Normal flow, m^3/s (gpm)	~ 0.6 (9300)
Total head m (ft.)	~ 381 (1250)
Required motor power, MW (hp)	~ 4.3 (5780)
Feedwater Heaters *:	
Low Pressure Heaters	
a. No. 1:	
Number per stage	3
Stage pressure, kPa (psia)	24.13 (3.5)
Duty per shell, MW (MBtu/hr)	33 (11.3×10^4)
b. No. Drain Cooler:	
Number per stage	3
Duty per shell, MW (MBtu/hr)	7.2 (24.5×10^3)
c. No. 2:	
Number per stage	3
Stage pressure, kPa (psia)	57.4 (8.32)
Duty per shell, MW (MBtu/hr)	52 (17.8×10^4)
d. No. 3:	
Number per stage	3
Stage pressure, kPa (psia)	228.6 (33.2)
Duty per shell, MW (MBtu/hr)	101.2 (34.5×10^4)
e. No. 4:	
Number per stage	3
Stage pressure, kPa (psia)	482 (69.9)
Duty per shell, MW (MBtu/hr)	67.1 (22.9×10^4)
f. No. 5 (Direct contact type. Feedwater Tank)	
Number per stage	1
Stage pressure, kPa (psia)	859 (124.5)

Table 10.1-1

Summary of Important Design Features and Performance Characteristics of the Steam and Power Conversion System

Parameter	Value **
Net feedwater volume, $m^3(ft^3)$	680 ($24x10^3$)
Duty per shell, MW (MBtu/hr)	201.3 ($68.7x10^4$)
High Pressure Heaters	
e. No. 6:	
Number per stage	2
Stage pressure, kPa (psia)	1711 (248.1)
Duty per shell, MW (MBtu/hr)	152 ($51.8x10^4$)
f. No. 7:	
Number per stage	2
Stage pressure, kPa (psia)	2377 (344.8)
Duty per shell, MW (MBtu/hr)	92.7 ($31.6x10^4$)
Reactor Feedwater Pump:	
Number of pumps	4 (booster and main pump)
Pump type	Variable speed, centrifugal, horizontal
Driver type	Motor driven
Normal flow, m^3/s (gpm)	0.9 ($14.3x10^3$)
Total head at runout, m (ft.)	1028 (337)
Required motor power, MW (hp)	12.77 ($17.1x10^3$)

* Feedwater heater performance is shown for 100% valve wide open (VWO) operation.

** Potential variation in parameters such as feedwater temperature, alternate last-stage bucket (LSB), condenser vacuum, alternate condenser design and the resulting generator output, may be considered in COL phase based on site data and Utility specific needs.

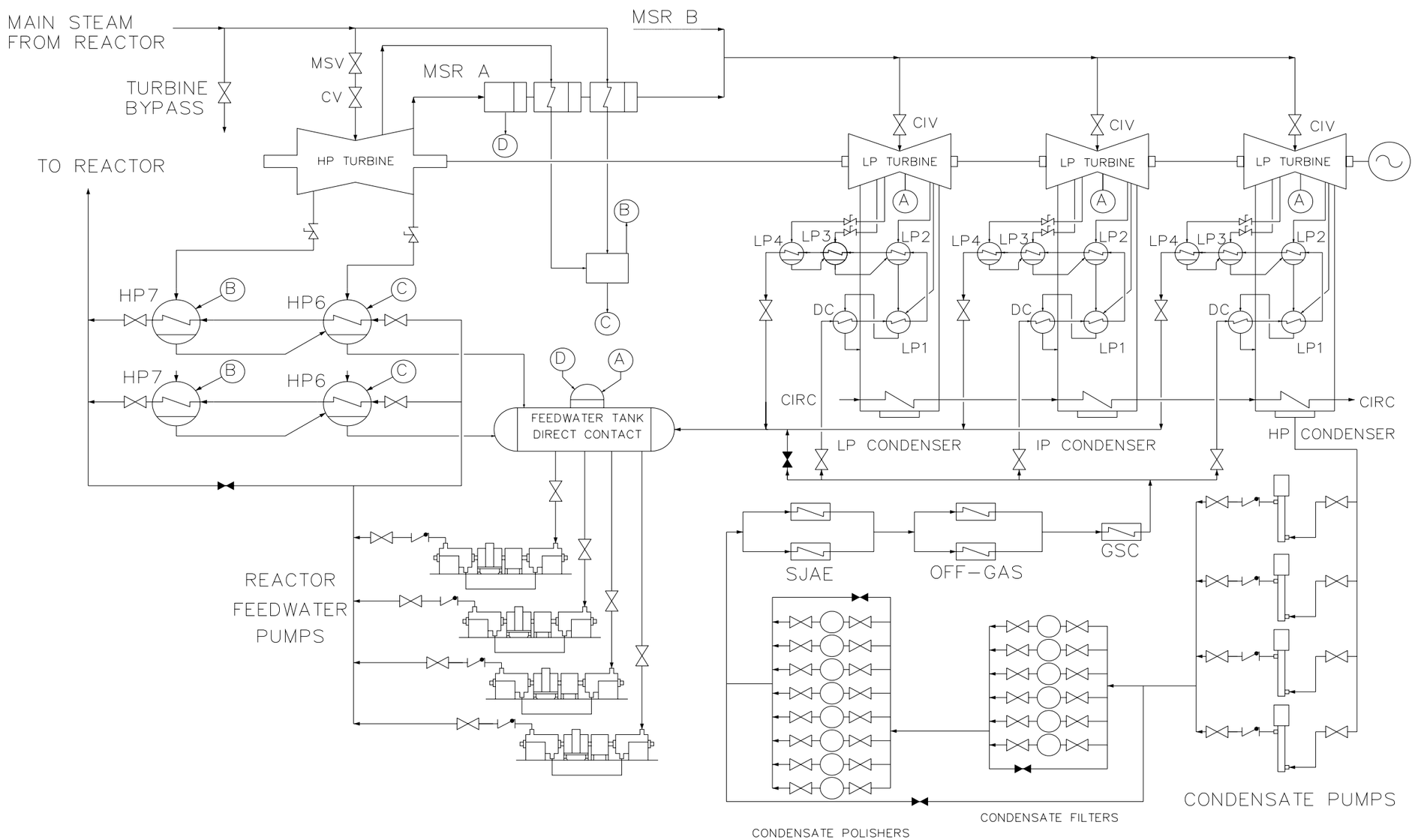

Figure 10.1-1. Power Cycle Schematic

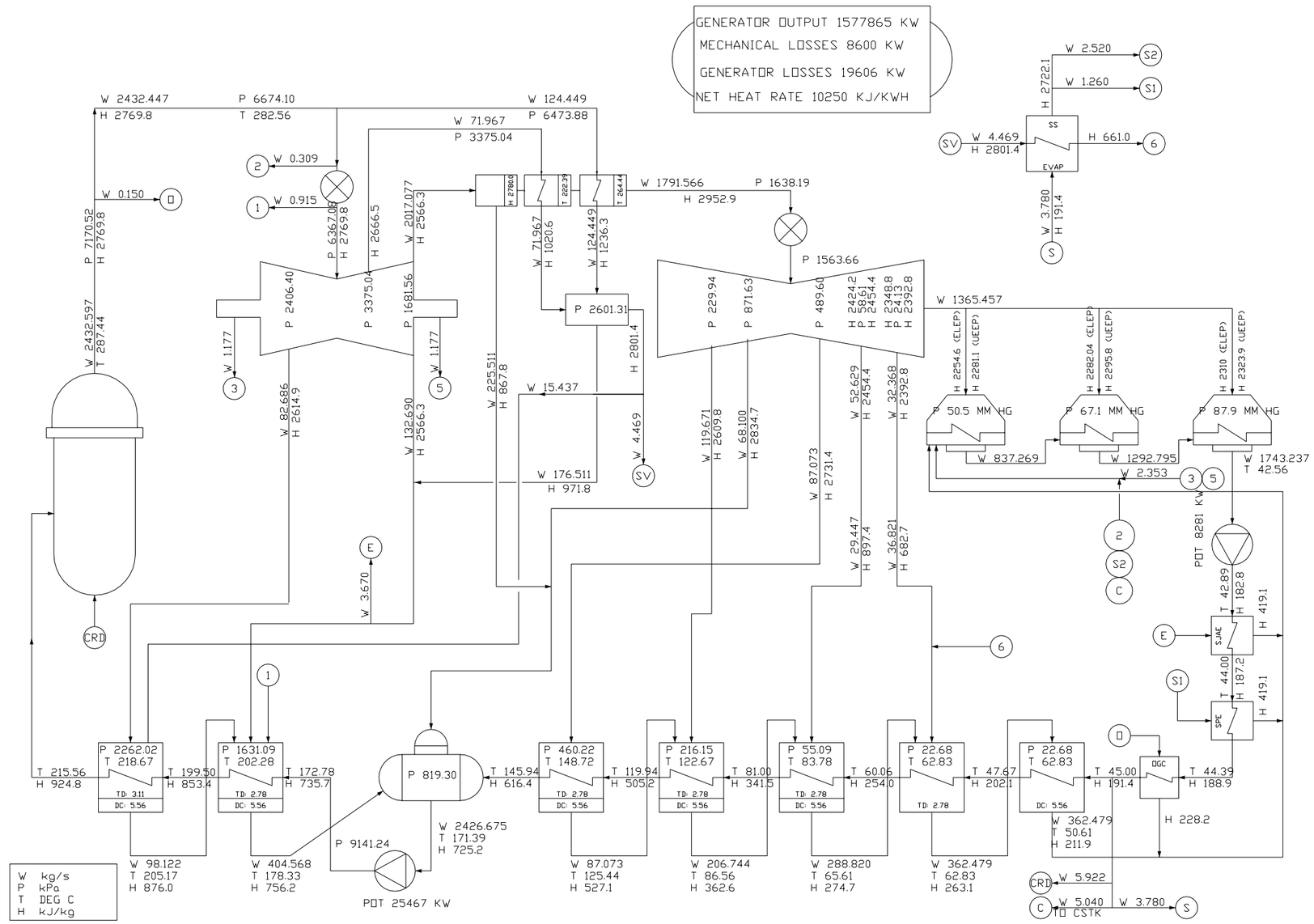

Figure 10.1-2. Rated Heat Balance (S.I. Units)
Sh 1 of 2

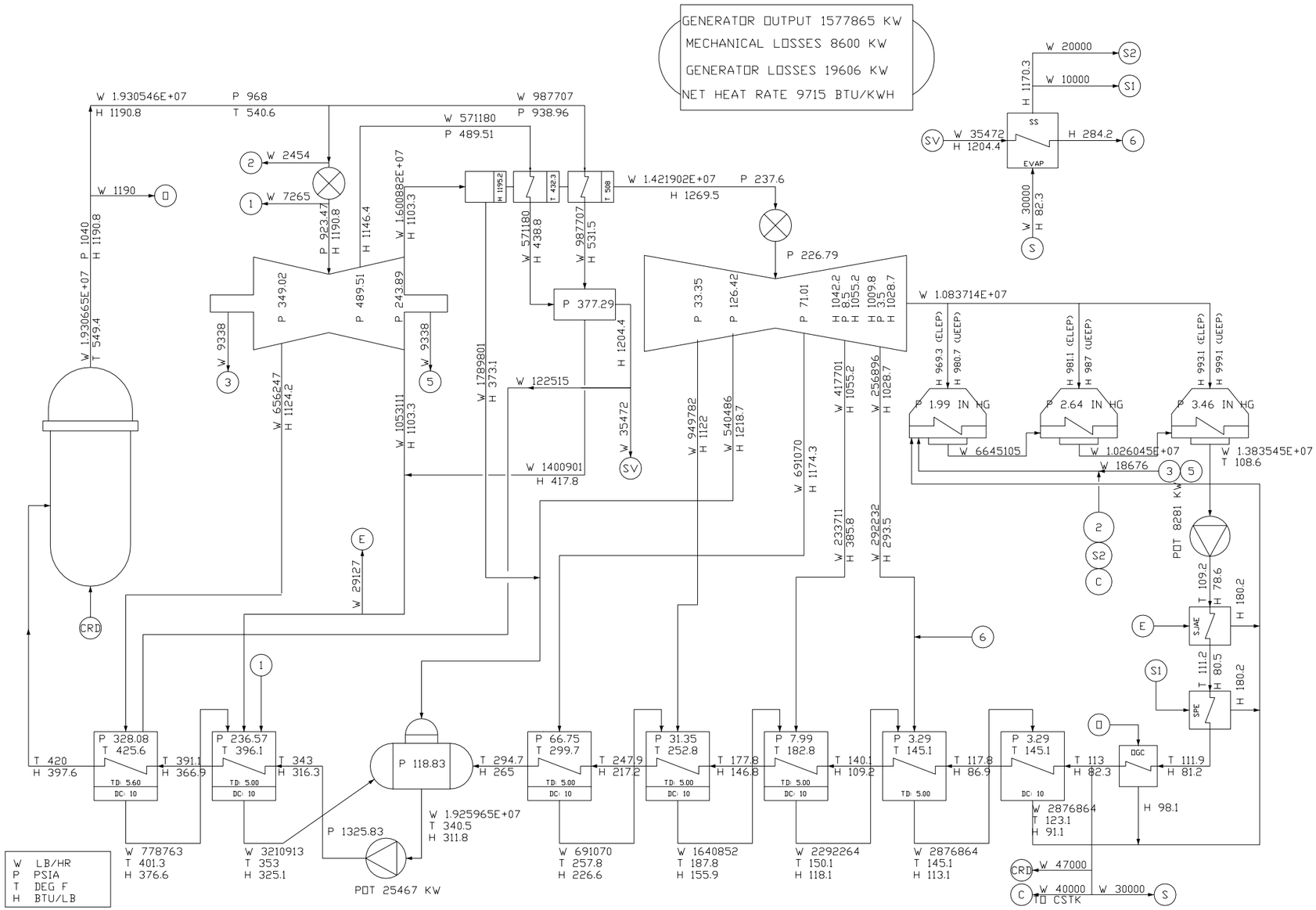

Figure 10.1-2. Rated Heat Balance (U.S. Units)
Sh 2 of 2

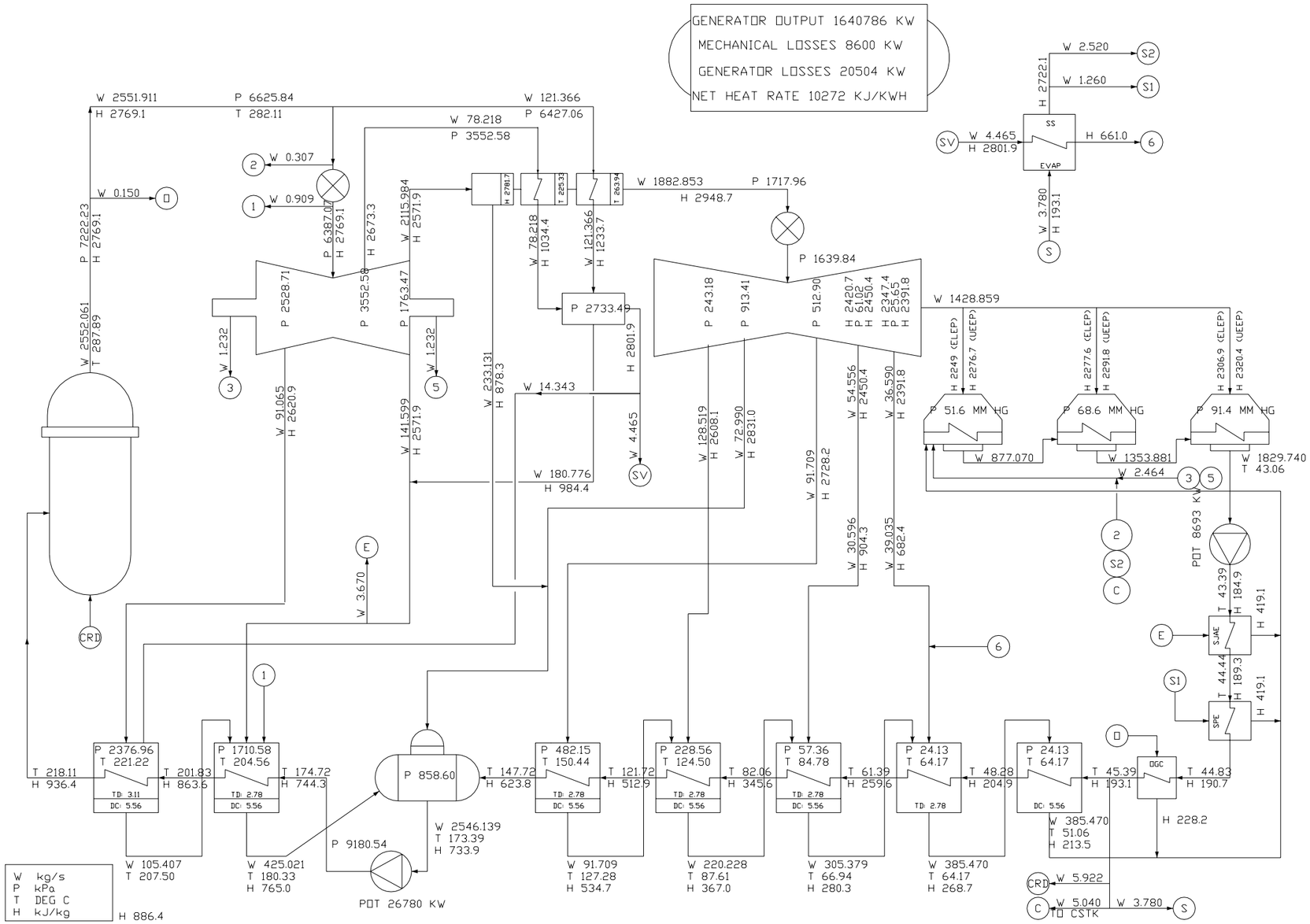

Figure 10.1-3. Valves Wide Open-Heat Balance (S.I. Units)
Sh 1 of 2

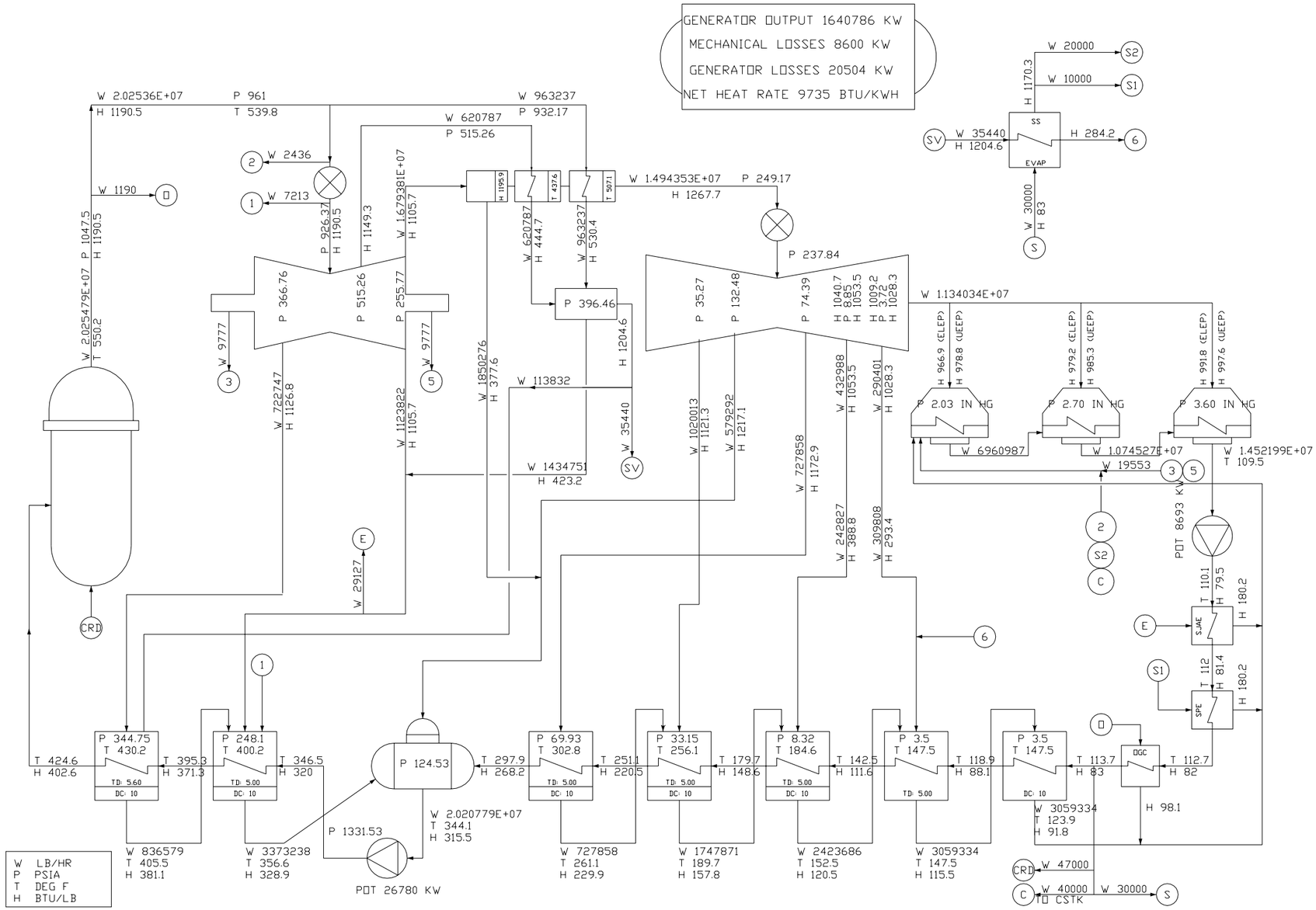

Figure 10.1-3. Valves Wide Open-Heat Balance (U.S. Units)
Sh 2 of 2

10.2 TURBINE GENERATOR

10.2.1 Design Bases

The design of the turbine generator (TG) system meets the requirement of General Design Criterion 4 as related to the protection of safety-related structures, systems and components from the effects of turbine missiles by providing a redundant turbine overspeed protection system to minimize the probability of generation of turbine missiles and locating and orienting them so as to avoid any potential impact on safety-related structures and equipment.

10.2.1.1 Safety (10 CFR 50.2) Design Bases

The TG does not perform nor support any safety-related function, and thus, has no safety design basis. The turbine generator is, however, a potential source of high energy missiles that could damage safety-related equipment or structures. The turbine is designed to minimize the possibility of failure of a turbine blade or rotor. Turbine integrity is discussed in Subsection 10.2.3. The effects of potential high energy missiles are discussed in Section 3.5. In addition, the main steam turbine stop valves are analyzed to demonstrate structural integrity under safe shutdown earthquake (SSE) loading conditions.

10.2.1.2 Non-Safety Power Generation Design Bases

(1) The TG is intended for either base load or load following operation. The gross generator outputs at reference reactor rated thermal power and valves-wide open (VWO) operation are given on the heat balances shown on Figures 10.1-2 and 10.1-3, respectively. Potential variation in parameters such as final feedwater temperature, alternate Last-Stage Bucket (LSB), condenser vacuum, alternate condenser design may be considered in COL phase based on site data and Utility specific needs.

(2) The TG load change characteristics are compatible with the instrumentation and control system, which coordinates T G and reactor operation.

(3) The TG is designed to accept a sudden loss of full load with sufficient margin to the overspeed trip and to be able to power the house load.

(4) The TG is designed to permit periodic under load testing of steam valves important to overspeed protection, emergency overspeed trip circuits, and several other trip circuits.

(5) The failure of any single component does not cause the rotor speed to exceed the design speed.

(6) The TG is designed to support the plant availability goals. All turbine control functions, which are required for power generation, use at least dual redundant controllers and triply redundant control inputs.

(7) The TG auxiliary systems (stator cooling, lube oil cooling, etc.) are designed either with enough redundancy to support full power operation with a single failure or to provide a signal to the reactor power control system to automatically reduce power to within the capability of the remaining on-line capacity.

10.2.1.3 Functional Limitations Imposed by the Design or Operational Characteristics of the Reactor Coolant System

Turbine main steam stop and control valves and reheat steam stop and intermediate valves protect the turbine from exceeding set speeds and protect the reactor system from abnormal pressure surges. The reheat stop and intermediate valves are capable of closure concurrent with the main steam stop valves and control valves, or of sequential closure within an appropriate time limit, to ensure that turbine overspeed is controlled within acceptable limits. The valve arrangements and valve closure times are such that a failure of any single valve to operate does not result in excessive turbine overspeed in the event of a TG trip signal.

Turbine Stop Valve

During an event resulting in turbine stop valve fast closure, turbine inlet steam flow is not reduced faster than that shown in Figure 10.2-1.

Turbine Control Valve

During any event resulting in turbine control valve fast closure, turbine inlet steam flow is not reduced faster than that shown in Figure 10.2-2.

The turbine control valve steam flow shutoff rate, upon a step reduction to zero in pressure regulation flow demand (no resulting bypass steam flow demand), is within the region shown in Figure 10.2-3. Any single control system failure or TG event does not cause a faster steam flow reduction than that shown in Figure 10.2-3 without generating fast control valve closure signals to the RPS.

The turbine control valves are capable of full stroke opening and closing times not greater than 7 seconds for adequate pressure control performance.

Load Maneuvering Capability

The plant is capable of accommodating load demand changes up to ±5% at a minimum rate of 1%/minute throughout the daily load following range.

The plant is capable of daily load following with control rod drive operation between 100% and 50% of rated power on a 14-1-8-1 hour cycle and with ramp rates up to ±1%/minute. The plant design accommodates a minimum of 17200 equivalent daily load following cycles.

Power maneuvers within the capabilities above do not result in isolation or bypass of condensate/feedwater equipment such as feedwater heaters.

The plant is capable of 20% of rated power step demand increase or decrease within 10 minutes.

10.2.2 Description

10.2.2.1 General Description

The turbine-generator consists of an 1800 rpm turbine, moisture separator/reheaters, generator, exciter, controls, and associated subsystems.

The turbine for the ESBWR reference plant consists of a double-flow, high-pressure unit, and three double flow low-pressure units in tandem. The high-pressure turbine has two stages of steam extraction.

Moisture separation and reheating of the high-pressure turbine exhaust steam is performed by two moisture separator/reheaters (MSRs). The MSRs are located on each side of the TG centerline. The steam passes through the low-pressure turbines, each with five extraction points for the five low-pressure stages of feedwater heating, and exhausts into the main condenser. In addition to the external MSRs, the turbines are designed to separate water from the steam and drain it to the next lowest extraction point feedwater heater.

The generator is a direct driven, three-phase, 60 Hz, 1800 rpm synchronous generator with a water-cooled stator and hydrogen cooled rotor.

The turbine-generator uses a digital monitoring and control system, which, in coordination with the turbine Steam Bypass and Pressure Control System, controls the turbine speed, load, and flow for startup and normal operations. The control system operates the turbine stop valves, control valves, and combined intermediate valves (CIVs). TG supervisory instrumentation is provided for operational analysis and malfunction diagnosis.

TG accessories include the bearing lubrication oil system, turbine control system (TCS) , turning gear, hydrogen and CO2 system, seal oil system, stator cooling water system, exhaust hood spray system, turbine gland sealing system, and turbine supervisory instrument system.

The TG unit and associated piping, valves, and controls are located completely within the Turbine Building. Any local failure associated with the TG unit will not affect any safety-related equipment. Failure of TG equipment cannot preclude safe shutdown of the reactor system.

10.2.2.2 Component Description

The MSRs, MSR drain tanks, stator water coolers, and stator water demineralizer are designed to ASME Code Section VIII requirements. The balance of the TG is designed to Turbine Manufacturer's Standards.

Main Stop and Control Valves - Four high-pressure main stop and control valves admit steam to the high-pressure (HP) turbine. The primary function of the main stop valves is to quickly shut off the steam flow to the turbine under abnormal conditions. The primary function of the control valves is to control steam flow to the turbine in response to the turbine control system.

The main stop valves are operated in an open-closed mode either by the emergency trip, fast acting valve for tripping, or by a small solenoid valve for testing. The disks are totally unbalanced and cannot open against full differential pressure. A bypass is provided to pressurize the below seat areas of the four valves. Springs in the valves are designed to close the main stop valve in approximately 0.20 second under the abnormal conditions listed in Subsection 10.2.2.5.

Each stop valve contains a permanent steam strainer to prevent foreign matter from entering the control valves and turbine.

The control valves are designed to ensure tight shutoff. The valves are of sufficient size, relative to their cracking pressure, to require a partial balancing. Each control valve is operated by a single acting, spring-closed servomotor opened by a high-pressure fire-resistant fluid supplied through a servo valve. The control valve is designed to close in approximately 0.20 second.

Extraction Steam Valves - (provided at extraction connections) are capable of closing within an appropriate time limit to maintain stable turbine speeds in the event of a TG trip signal.

High-Pressure Turbine - The HP turbine receives steam through four steam leads, one from each control valve outlet. The steam is expanded axially across several stages of stationary and moving blades. Extraction steam from the turbine supplies the last stage (7th stage) of feedwater heating. HP turbine exhaust steam is collected in eight cold reheat pipes, four at each end of the turbine. Most of the exhaust steam is routed to the MSR inlet, but part of it is diverted and supplies the next to last stage (6th stage) of feedwater heating.

Moisture Separator Reheaters - Two two-stage horizontal cylindrical shell, combined moisture separator/reheaters (MSRs) are installed in the steam path between the high and low-pressure turbines. The MSRs serve to dry and reheat the HP turbine steam exhaust (crossaround steam), before it enters the low-pressure turbines. This improves cycle efficiency and reduces moisture-related erosion and corrosion in the low-pressure turbines. Cold reheat steam is piped into the bottom of the MSR. Moisture is removed in chevron-type moisture separators, and is drained to the moisture separator drain tanks and from there to the fifth stage of feedwater heating . The dry crossaround steam next passes upward across the two reheater stages. Heating steam to the first reheater stage is supplied with HP Turbine extraction steam and heating steam to the second reheater stage is supplied with main steam. Finally, the crossaround steam is routed to the combined intermediate valves (CIVs), which are located just upstream of the low-pressure turbines inlet nozzles.

The reheaters drain to high-pressure 6th stage feed water heaters and also provide the heating steam source of gland seal evaporator. Safety valves are provided on the MSR for overpressure protection.

Combined Intermediate Valves - Two hydraulically operated combined intermediate valves (CIVs) are provided for each LP turbine, one in each steam supply line, called the hot reheat line. The CIV consists of the intercept valve and the intermediate stop valve, which share a common casing. Although they utilize a common casing, these valves have entirely separate operating mechanisms and controls. The function of the CIVs is to protect the turbine against overspeed from steam and water energy stored between the main stop and control valves and the CIVs. One CIV is located on each side of each LP turbine.

Steam from the MSRs enters the single inlet of each valve casing, passes the intercept valve and stop valve disks and enters the LP turbine through a single inlet. The CIVs are located as close to the LP turbine as possible to limit the amount of uncontrolled steam available for overspeeding the turbine. Upon loss of load, the intercept valve first closes then throttles steam to the LP turbine, as required to control speed and maintain synchronization. It is capable of opening against full system pressure. The intermediate stop valves close only if the intercept valves fail to operate properly. These valves are capable of opening against a pressure differential of approximately 15% of the maximum expected system pressure. The intermediate stop valve and intercept valve are designed to close in approximately 0.2 second.

Low-Pressure Turbines - Each LP turbine receives steam from two CIVs. The steam is expanded axially across several stages of stationary and moving buckets. Turbine stages are numbered consecutively, starting with the first HP turbine stage.

Extraction steam from the LP turbines supplies the first five stages of feedwater heating.

Extraction Non-return Valves - Upon loss of load, the steam contained downstream of the turbine extractions could flow back into the turbine, across the remaining turbine stages, and into

the condenser. Associated condensate could flash to steam under this condition and contribute to the backflow of steam or could be entrained with the steam flow and damage the turbines. Non-return valves will be employed in selected extraction lines to minimize potential for over speeding and also for preventing water entrainment if found necessary (see subsection 10.2.5.4 for COL information).

Generator - The generator is a direct-driven, three-phase, 60 Hz, 1800 rpm, four-pole synchronous generator with water-cooled stator and hydrogen cooled rotor.

The rotor is manufactured from a one-piece forging and includes layers of field windings embedded in milled slots. The windings are held radially by steel slot wedges, at the rotor outside diameter. The wedge material maintains its mechanical properties at elevated temperature. The magnetic field is generated by DC power, which is fed to the windings through collector rings located outboard of the main generator bearings.

The rotor body and shaft is machined from a single, solid steel forging. Detailed examinations include:

(1) material property checks on test specimens taken from the forging;

(2) photomicrographs for examination of microstructure;

(3) magnetic particle and ultrasonic examination; and

(4) surface finish tests of slots for indication of a stress riser.

Bulk Hydrogen System - The bulk hydrogen and CO_2 system is illustrated on Figure 10.2-4. The hydrogen system is designed to provide the necessary flow and pressure at the main generator for purging carbon dioxide during startup and supply makeup hydrogen for generator leakage during normal operation.

The system consists of hydrogen supply piping with all the necessary valves, instrumentation, gas purity measuring equipment, hydrogen gas dryers, and bulk hydrogen storage unit.

Fires and explosions during filling and/or purging of the generator are prevented by inerting the generator with CO_2 so that a flammable mixture of hydrogen and oxygen cannot be produced. Unneeded hydrogen is vented outside through a flame arrestor.

The bulk hydrogen system utilizes the guidelines given in EPRI report NP-5283-SR-A with respect to these portions of the guidelines involving hydrogen that do not deal specifically with the optional Hydrogen Water Chemistry (HWC) system . Specifically, the bulk hydrogen system piping and components are located to reduce risk from their failures. The bulk hydrogen storage is located outside but near the Turbine Building. The hydrogen lines are provided with a pressure reducing station that limits the maximum flow to less than 100 standard cubic meters per minute before entering the Turbine Building. Equipment and controls used to mitigate the consequences of a hydrogen fire/explosion are designed to be accessible and remain functional during the postulated post-accident condition. The design features and/or administrative controls shall be provided to ensure that the hydrogen supply is isolated when normal building ventilation is lost.

The arrangement of buildings at the facility and location of building doors and the bulk hydrogen storage tanks are designed to ensure that damage to buildings containing safety-related equipment due to combustion of hydrogen or an explosion is unlikely.

Additionally, the bulk hydrogen system piping in the Turbine Building is designed in accordance with the industry practice.

10.2.2.3 Normal Operation

During normal operation, the main stop valves and CIVs are wide open. Operation of the TG is under the control of the Turbine Control System (TCS). The Steam Bypass and Pressure Control System (SB&PC) controls the turbine control valves through the TCS to regulate reactor pressure. The normal function of the TCS is to generate the position signals for the four main stop valves, four main control valves, and six CIVs.

10.2.2.4 Turbine Overspeed Protection System

The turbine control and overspeed protection system controls turbine action under all normal or abnormal operating conditions, and ensures that a full load turbine trip does not cause the turbine to overspeed beyond acceptable limits. Under these conditions, the control and protection system permits an orderly power reduction using the turbine bypass system and the Select Control Rod Run-In (SCRRI) function. The overspeed protection system meets the single failure criterion and is testable when the turbine is in operation.

In addition to the normal speed control function provided by the turbine control system, a separate turbine overspeed protection system is included. The turbine overspeed protection system is a highly reliable and redundant system, which is classified as non-safety-related.

Protection against turbine overspeed is provided by the Primary Electrical overspeed system and the Emergency overspeed trip system. Redundancy is achieved by using three (3) separate speed signals for the Primary Trip and speed control systems, and three (3) additional speed signals for the Emergency trip system.

The overspeed sensing devices – tooth wheel and speed pickup probes - are located in the Turbine front standard and, therefore, are protected from the effects of missiles or pipe break. The hydraulic lines are fail-safe; that is, if one were to be broken, loss of hydraulic pressure would result in a turbine trip. The electric trip signals are redundant. One circuit could be disabled by damage to the wiring, but the other system is fail-safe (i.e., loss of signal results in a turbine trip). These features provide inherent protection against failure of the overspeed system caused by missiles or pipe whipping.

The Primary and Emergency electrical trip overspeed modules each consist of three (3) independent circuits. Each circuit monitors a separate speed signal and activates trip logic at various speed levels. The output of these circuits is used in tripping and monitoring of the turbine, as well as speed control within the Primary trip module. The turbine trip is initiated upon failure of two of the three channels. Either trip module can de-energize the electro-hydraulic 2-out-of-3 Emergency Trip Device (ETD), thereby dumping the emergency trip fluid to all steam valve actuators, resulting in a turbine trip. The ETD is configured with a 2-out-of-3 trip logic, and includes three (3) electrical trip solenoid valves, all de-energized to trip. Any two (2) trip solenoid valves shifting to the trip position will cause the emergency trip fluid to be de-pressurized. The ETD is to be testable on-line, such that each individual trip solenoid valve can be tested one at a time.

Two air relay dump valves are provided which actuate on turbine trip. The valves control air to the extraction non-return valves, which limit contributions to turbine overspeed from steam and water in the extraction lines and feedwater heaters. The closing time of the extraction non-return valves is less than 2 seconds.

Upon loss of generator load from any initial load conditions, the TCS acts to prevent rotor speed from exceeding the overspeed trip, and controls the speed of the turbine to run the house load. Failure of any single component does not result in rotor speed exceeding design overspeed. The following component redundancies are employed to guard against overspeed:

(1) Main stop valves/Control valves;

(2) Intermediate stop valves/Intercept valves;

(3) Primary Speed Control/Power-load Unbalance Circuits/Emergency Trip Device solenoid valves

(4) Fast acting solenoid valves/Emergency trip fluid system; and

(5) Speed Control/Primary Overspeed trip/Emergency Overspeed trip.

The main stop valves and control valves provide full redundancy in that these valves are in series and have completely independent operating controls and operating mechanisms. Closure of either all four stop valves or all four control valves shuts off all main steam flow to the HP turbine. The combined intermediate stop and intercept valves are also in series and have completely independent operating controls and operating mechanisms. Closure of either valve or both valves in each of the six sets of combined intermediate stop and intercept valves shuts off all MSR outlet steam flow to the three LP turbines.

The speed control unit utilizes at least three speed signals, configured in a 2-out-of-3 control scheme. An increase in turbine speed tends to close the control valves. Loss of two speed signals initiates a turbine trip via the Emergency Trip System (ETS).

Fast acting valves initiate fast closure of control and intercept valves under load rejection conditions that might otherwise lead to rapid rotor acceleration. At loads exceeding 40%, the Power-load Unbalance (PLU) circuits are armed to provide these signals to the fast-acting valves on the control and intercept valve actuators. A rapid dump of the ETS fluid system due to de-energization of the ETS trip solenoid valves initiates fast closure of these steam valves whether the fast-acting solenoid valves work or not.

If speed control should fail, the overspeed trip devices must close the steam admission valves to prevent turbine overspeed. Component redundancy and fail-safe design of the ETS hydraulic system and trip circuitry provide turbine overspeed protection. Three speed signals independent of the speed control unit provide input to the backup, overspeed trip. For reliability, two-out-of-three logic is employed in both Primary and Emergency overspeed trip circuitry. Single component failure does not compromise trip protection. Loss of power trips the turbine through fail-safe circuitry.

10.2.2.5 Turbine Protection System

In addition to the overspeed trip signals discussed, the ETS closes the main stop and control valves and the CIVs to shut down the turbine on the following signals.

(1) Emergency trip pushbutton in control room

(2) Moisture separator high level

(3) High condenser pressure

(4) Low lube oil pressure

(5) LP turbine exhaust hood high temperature

(6) High reactor water level

(7) Thrust bearing wear

(8) Overspeed (Primary and Emergency trip systems)

(9) Manual Push-button on front standard

(10) Loss of stator coolant

(11) Low hydraulic fluid pressure

(12) Any generator trip.

(13) Loss of TCS electrical power

(14) Excessive turbine shaft vibration

(15) Loss of two speed signals – either Primary or Emergency

(16) Loss of two pressure control channels

All of the above trip signals except generator trips, loss of power, vibration and manual trips use 2/3 coincident trip logic.

When the ETS is activated, it overrides all operating signals and trips the main stop and control valves, and combined intermediate valves by way of their disk/dump valves.

10.2.2.6 Turbine-Generator Supervisory Instruments

Although the turbine is not readily accessible during operation, the turbine supervisory instrumentation is sufficient to detect most malfunctions. The turbine supervisory instrumentation includes monitoring of the following:

(1) Vibration and eccentricity

(2) Thrust bearing wear

(3) Exhaust hood temperature and spray pressure

(4) Oil system pressures, levels and temperatures

(5) Bearing metal and oil drain temperatures

(6) Shell temperature

(7) Valve positions

(8) Shell and rotor differential expansion

(9) Shaft speed, electrical load, and control valve inlet pressure indication

(10) Hydrogen temperature, pressure and purity

(11) Stator coolant temperature and conductivity

(12) Stator-winding temperature

(13) Exciter air temperatures

(14) Turbine gland sealing pressure

(15) Gland steam condenser vacuum

(16) Steam chest pressure

(17) Seal oil pressure

10.2.2.7 Testing

The Primary and Emergency overspeed trip circuits and devices can be tested remotely at rated speed, under load, by means of controls on the TCS operator interface panel. Operation of the overspeed protection devices under controlled, overspeed condition is checked at startup and after each refueling or major maintenance outage.

During refueling or maintenance shutdowns coinciding with the inservice inspection schedule required by Section XI of the ASME Code for reactor components, at least one main steam stop valve, one turbine control valve, one reheat stop valve, one CIV valve, and one reheat intermediate valve is dismantled and visual and surface examinations conducted of valve seats, disks and stems. If unacceptable flaws or excessive corrosion is found in a valve, all other valves of that type would be dismantled and inspected. Valve bushings will be inspected and cleaned, and bore diameters should be checked for proper clearance.

Main steam stop and control valves are exercised at least once a month by closing each valve and observing by the valve position indicator that it moves smoothly to a fully closed position. At least once a month, this examination should be made by observation of the valve motion.

Unlimited access to required areas around the turbine under operating conditions is provided. Radiation shielding is provided as necessary to permit access.

Provisions for testing each of the following devices while the unit is operating are included:

(1) Main stop and control valves

(2) Low pressure turbine combined intermediate valves (CIVs)

(3) Emergency trip devices

(4) Turbine extraction non-return valves

(5) Remote trip solenoids

(6) Lubricating oil pumps

(7) Control fluid pumps

(8) Primary and Emergency trip device

(9) Power-load Unbalance circuits

10.2.3 Turbine Integrity

10.2.3.1 Materials Selection

Turbine rotors and parts are made from vacuum melted or vacuum degassed Ni-Cr-Mo-V alloy steel by processes, which minimize flaw occurrence and provide adequate fracture toughness. Tramp elements are controlled to the lowest practical concentrations consistent with good scrap selection and melting practice, and consistent with obtaining adequate initial and long-life fracture toughness for the environment in which the parts operate. The turbine materials have the lowest fracture appearance transition temperatures (FATT) and highest Charpy V-notch energies obtainable, on a consistent basis, from water quenched Ni-Cr-Mo-V material at the sizes and strength levels used. The processing is controlled to maintain the FATT below-1ºC (30ºF) and to maintain the room temperature Charpy energy above 61J (45 ft-lbs) in all areas of the rotor.

10.2.3.2 Fracture Toughness

Suitable material toughness is obtained through the use of selected materials as described in Subsection 10.2.3.1, to produce a balance of material strength and toughness to ensure safety while simultaneously providing high reliability, availability and efficiency during operation.

Stress calculations include components due to centrifugal loads interference fit and thermal gradients where applicable. The ratio of material fracture toughness, K_{IC} (as derived from material tests on each major part or rotor), to the maximum tangential stress at speeds from normal to 115% of rated speed, is at least 10 $mm^{1/2}$. Adequate material fracture toughness needed to maintain this ratio is assured by a large historical database of tests.

Turbine operating procedures are employed to preclude brittle fracture at startup by ensuring that metal temperatures are (a) adequately above the FATT, and (b) as defined above, sufficient to maintain the fracture toughness to tangential stress ratio at or above 10 $mm^{1/2}$. Sufficient warmup time is specified in the turbine operating instruction to ensure that toughness is adequate to prevent brittle fracture during startup. (See COL information, Subsection 10.2.5.1.)

10.2.3.3 High Temperature Properties

The operating temperatures of the high-pressure rotors are below the stress rupture range. Therefore, creep-rupture is not a significant failure mechanism.

Turbine Design

The turbine assembly is designed to withstand normal conditions and anticipated transients, including those resulting in turbine trip, without loss of structural integrity. The design of the turbine assembly meets the following criteria:

(1) Turbine shaft bearings are designed to retain their structural integrity under normal operating loads and anticipated transients, including those leading to turbine trips.

(2) The multitude of natural critical frequencies of the turbine shaft assemblies existing between zero speed and 20% overspeed are controlled in the design and operation so as to cause no distress to the unit during operation.

(3) The maximum turbine disk tangential stress resulting from centrifugal forces, interference fit, and thermal gradients does not exceed 0.75 of the yield strength of the materials at 115% of rated speed.

(4) Turbine components are designed for an overspeed far above the 8% higher than normal overspeed resulting from a loss of load. The basis for the assumed overspeed will be submitted to the NRC staff for review. (See Subsection 10.2.5.2 for COL information.)

(5) The turbine disk design facilitates inservice inspection of all high stress regions.

10.2.3.4 Pre-service Inspection

The pre-service procedures and acceptance criteria are as follows:

(1) Forgings are rough machined with minimum stock allowance prior to heat treatment.

(2) Each finished machined rotor is subjected to 100% volumetric (ultrasonic), and surface visual examinations, using established acceptance criteria. These criteria are more restrictive than those specified for Class 1 components in the ASME Boiler and Pressure Vessel Code, Sections III and V, and include the requirement that subsurface sonic indications are either removed or evaluated to ensure that they do not grow to a size which would compromise the integrity of the unit during its service life.

(3) All finished machined surfaces are subjected to a magnetic particle test with no flaw indications permissible.

(4) Each fully bucketed turbine rotor assembly is spin tested at the highest anticipated speed resulting from a loss of load.

Additional pre-service inspections include air leakage tests performed to determine that the hydrogen cooling system is leak-tight before hydrogen is introduced into the generator casing. The hydrogen purity is tested in the generator after hydrogen has been introduced. The generator windings and all motors are megger tested. Vibration tests are performed on all motor-driven equipment. Hydrostatic tests are performed on all coolers. All piping is pressure tested for leaks. Motor-operated valves are factory leak tested and in-place tested once installed.

10.2.3.5 Inservice Inspection

The inservice inspection program for the turbine assembly includes the complete inspection of all normally inaccessible parts, such as couplings, coupling bolts, turbine shafts, low-pressure turbine buckets, low-pressure and high-pressure rotors. During plant shutdown coinciding with the inservice inspection schedule for ASME Section III components, turbine inspections, as required by the ASME Boiler and Pressure Vessel Code, Section XI, are performed in sections during the refueling outages so that a total inspection has been completed at least once within the time period recommended by the manufacturer.

This inspection consists of visual and surface examinations as indicated below:

(1) Visual examination of all accessible surfaces of rotors.

(2) Visual and surface examination of all low-pressure buckets.

(3) 100% visual examination of couplings and coupling bolts.

The inservice inspection of valves important to overspeed protection includes the following:

(1) All main stop valves, control valves, extraction non-return valves, and CIVs will be tested under load. Test controls installed on the main control room turbine panel permit full stroking of the stop valve, control valves, and CIVs. Valve position indication is provided on the main control room panel. Some load reduction is necessary before testing main stop and control valves, and CIVs. Extraction non-return valves are tested, by equalizing air pressure across the air cylinder. Movement of the valve arm is observed upon action of the spring closure mechanism.

(2) Main stop valves, control valves, extraction non-return valves, and CIVs will be tested by the COL licensee in accordance with the BWROG turbine surveillance test program, by closing each valve and observing by the valve position indication that the valve moves smoothly to a fully closed position. Closure of each main stop valve, control valve and CIV during test will be verified by observation of the valve motion.

(3) Tightness tests of the main stop and control valves are performed at least once per maintenance cycle by checking the coastdown characteristics of the turbine from no load with each set of four valves closed alternately.

(4) All main stop valves, main control valves, and CIVs will be inspected once during the first three refueling or extended maintenance shutdowns. Subsequent inspections will be scheduled by the COL licensee, in accordance with the BWROG turbine surveillance test program. The inspections will be conducted for:

   a. Wear of linkages and stem packings;

   b. Erosion of valve seats and stems;

   c. Deposits on stems and other valve parts, which could interfere with valve operation; and

   d. Distortions, misalignment.

Inspection of all valves of one type will be conducted if any unusual condition is discovered.

10.2.4 Evaluation

The turbine-generator is non safety-related, and is not needed to effect or support a safe shutdown of the reactor.

The turbine is designed, constructed, and inspected to minimize the possibility of any major component failure.

The turbine has a redundant, testable overspeed trip system to minimize the possibility of a turbine overspeed event.

Unrestrained stored energy in the extraction steam system has been reduced to an acceptable minimum by the addition of non-return valves in selected extraction lines.

The TG equipment shielding requirements and the methods of access control for all areas of the Turbine Building ensure that the dose criteria specified in 10 CFR 20 for operating personnel are not exceeded.

All areas in proximity to TG equipment are zoned according to expected occupancy times and radiation levels anticipated under normal operating conditions.

Specification of the various radiation zones in accordance with expected occupancy is listed in Chapter 12.

If deemed necessary during unusual occurrences, the occupancy times for certain areas will be reduced by administrative controls enacted by health physics personnel.

The design basis operating concentrations of N^{16} in the turbine cycle are indicated in Section 12.2.

The connection between the low-pressure turbine exhaust hood and the condenser is made by means of a rubber or stainless steel expansion joint.

Because there is no safety-related mechanical equipment in the turbine area, and because the condenser is at sub-atmospheric pressure during all modes of turbine operation, failure of the joint would have no adverse effects on safety-related equipment.

The TG trip logic and control schemes respectively use coincident logic and redundant controllers and input signals to assure that the plant availability goals are achieved and spurious trips are avoided.

10.2.5 COL Information

10.2.5.1 Low Pressure Turbine Disk Fracture Toughness

The COL applicant will provide turbine material property data and assure sufficient turbine warmup time as required by Subsection 10.2.3.2.

10.2.5.2 Turbine Design Overspeed

The COL applicant will provide the basis for the turbine overspeed as required by Subsections 10.2.3.3(4) and 10.2.3.4(4).

10.2.5.3 Turbine Inservice Test and Inspection

The COL applicant will provide the turbine inservice test and inspection requirements as noted in Subsection 10.2.3.5(2) & (4).

10.2.5.4 Extraction Non-return Values

The extraction lines where the non-return valves are used will be defined in the COL phase.

10.2.6 References

10.2-1 J. A. Begley and W.A. Logsdon, Westinghouse Scientific Paper 71-1E7 MSLRF-P1.

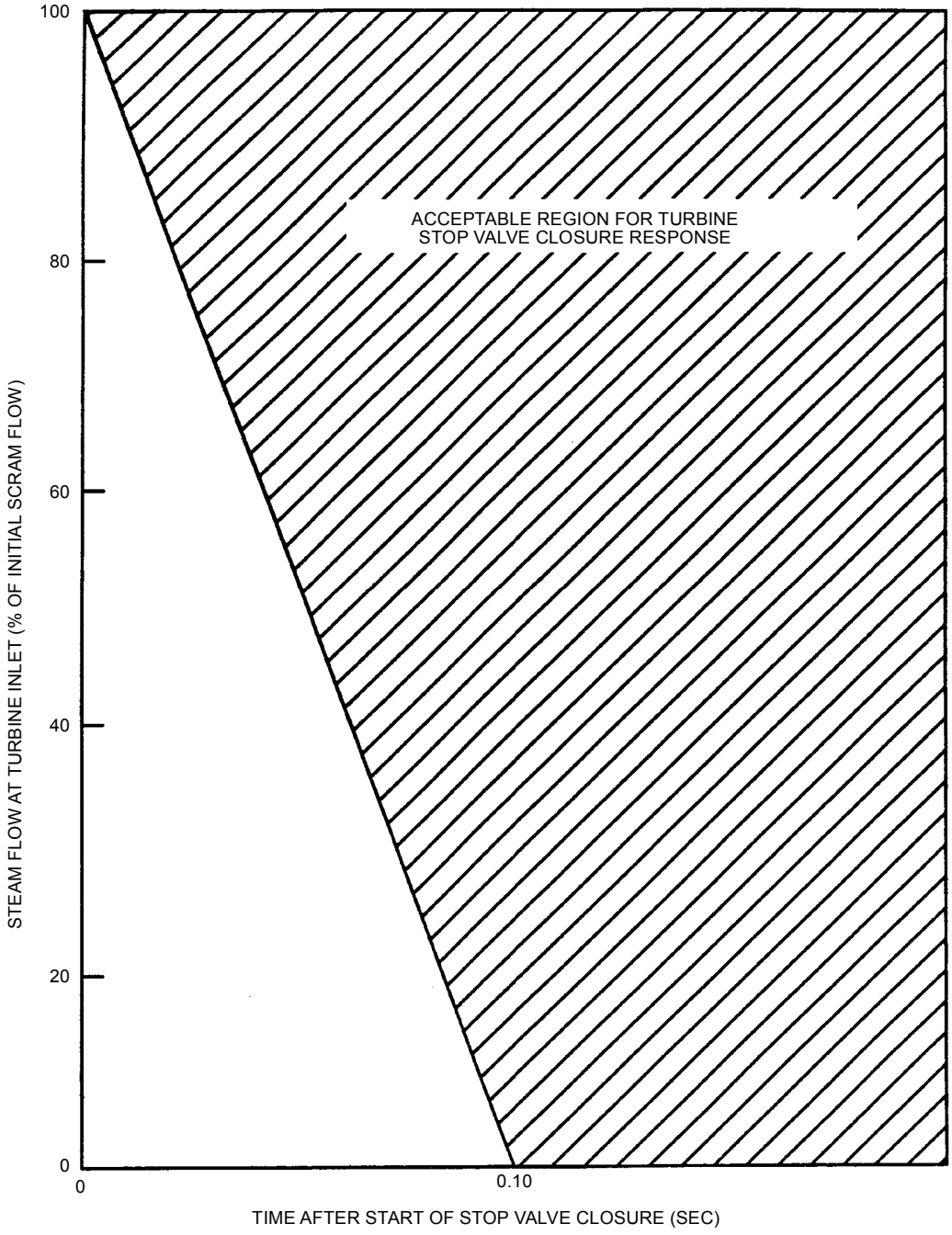

Figure 10.2-1. Turbine Stop Valve Closure Characteristic

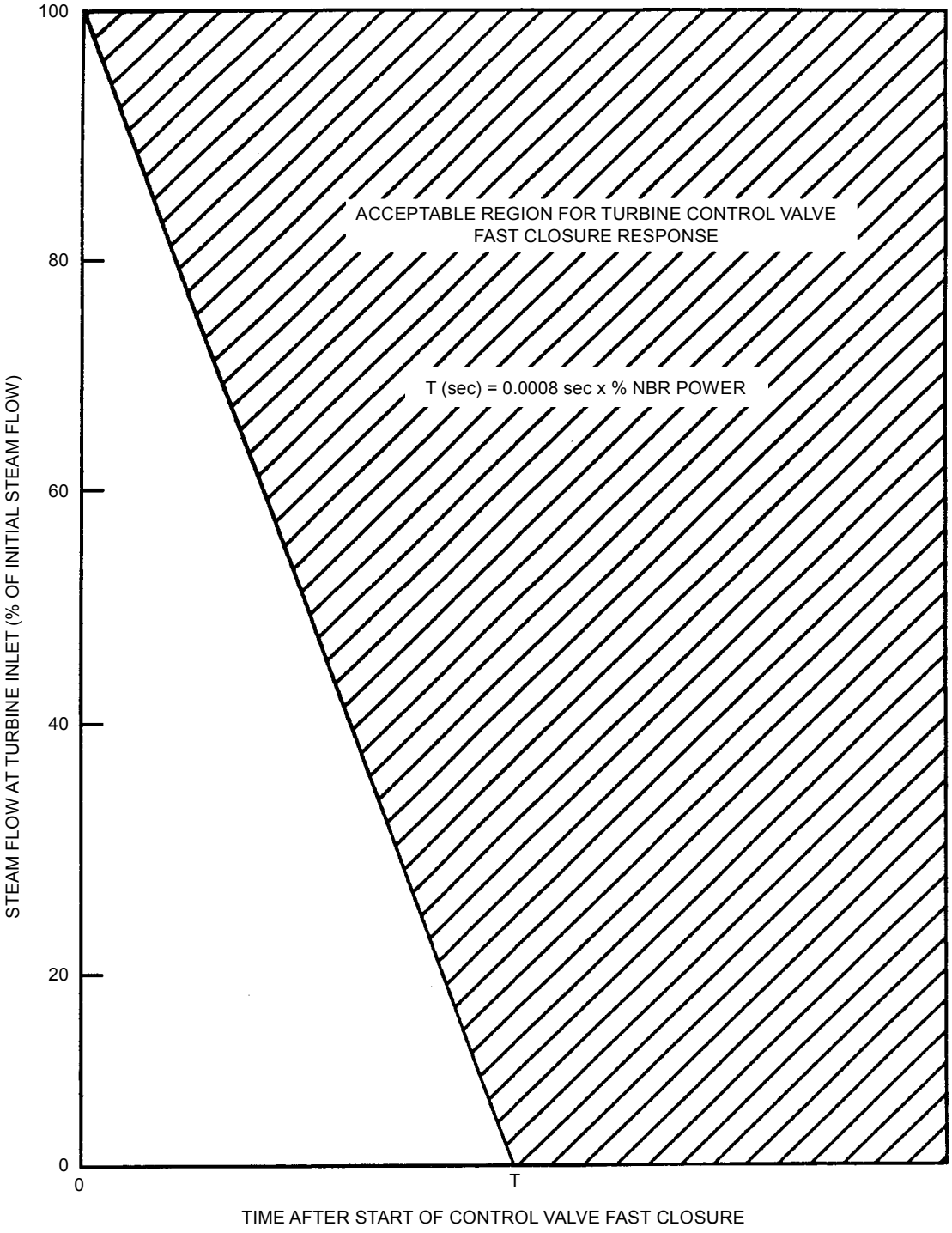

Figure 10.2-2. Turbine Control Valve Fast Closure Characteristic

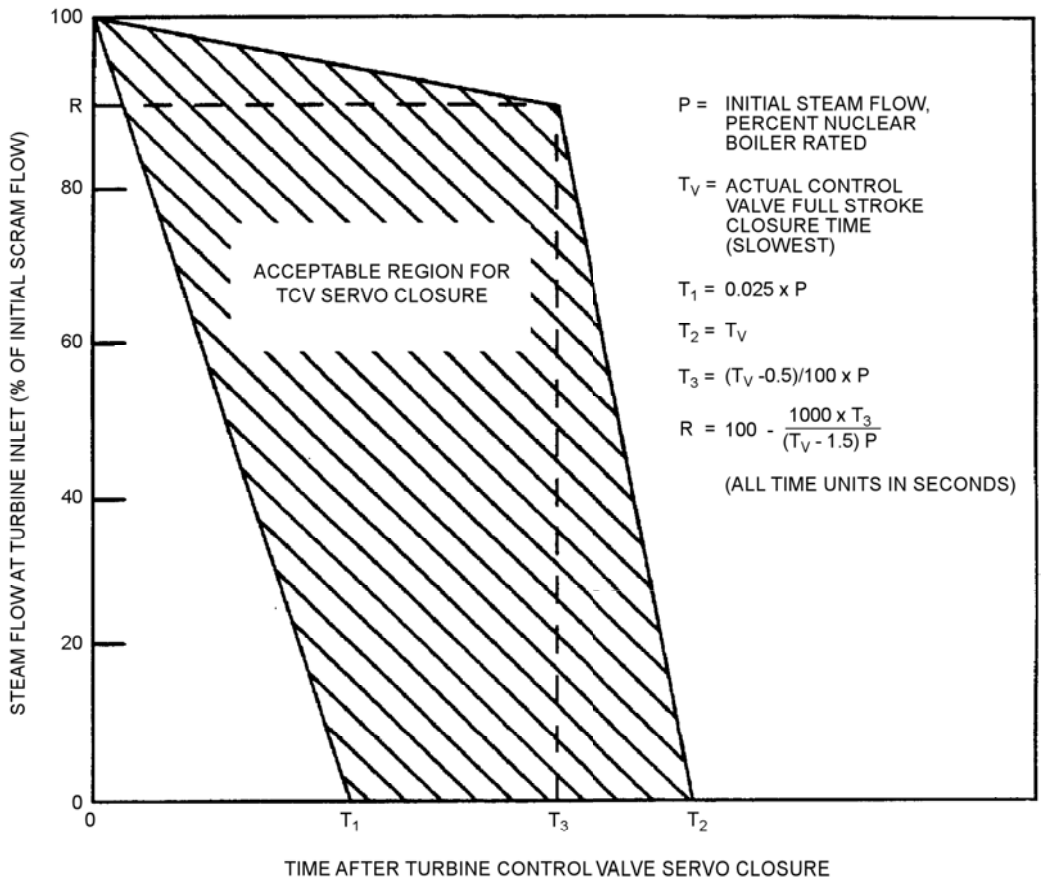

Figure 10.2-3. Acceptable Range for Control Valve Normal Closure Motion

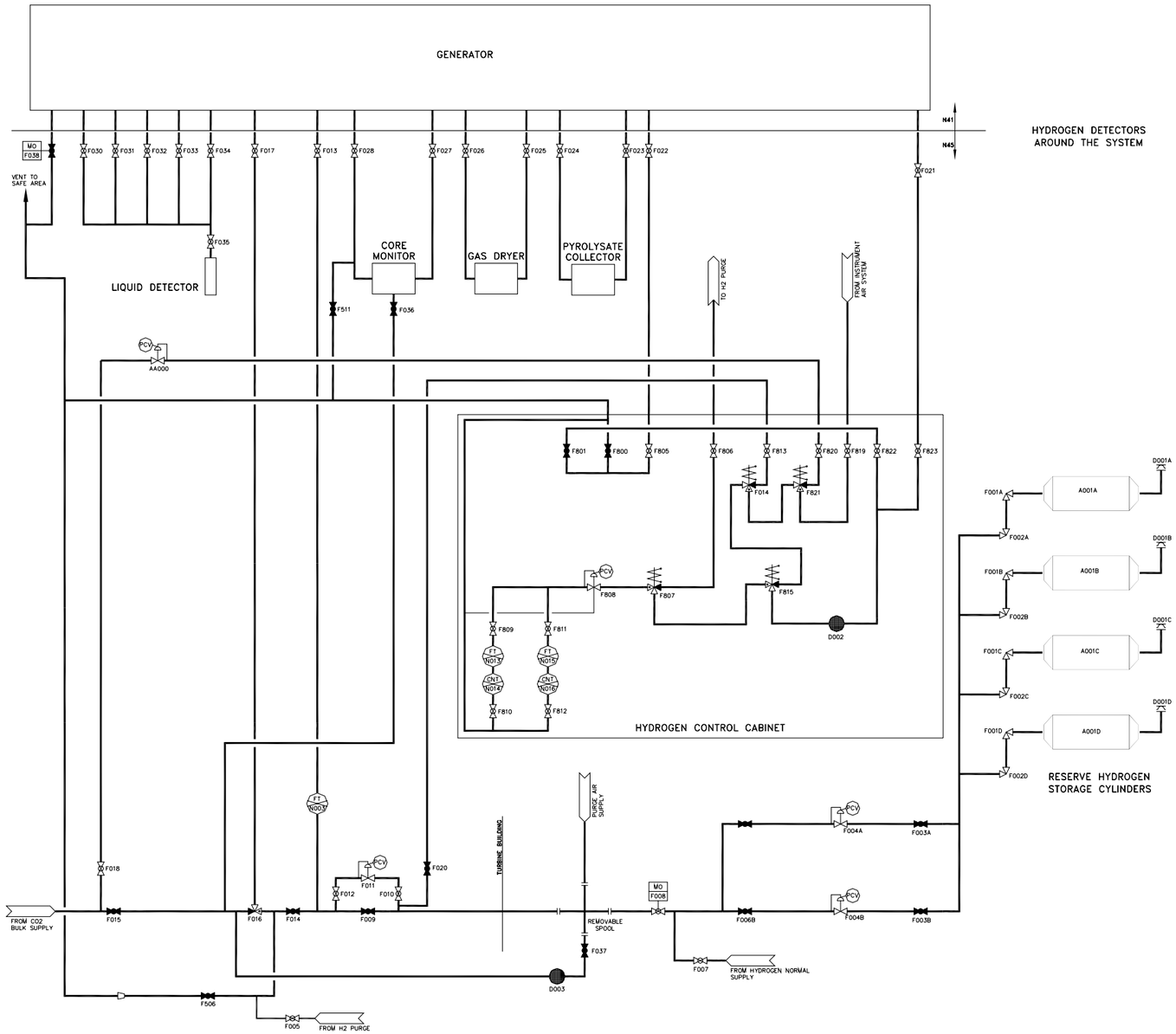

Figure 10.2-4. Generator Hydrogen and CO_2 System
Sh 1 of 2

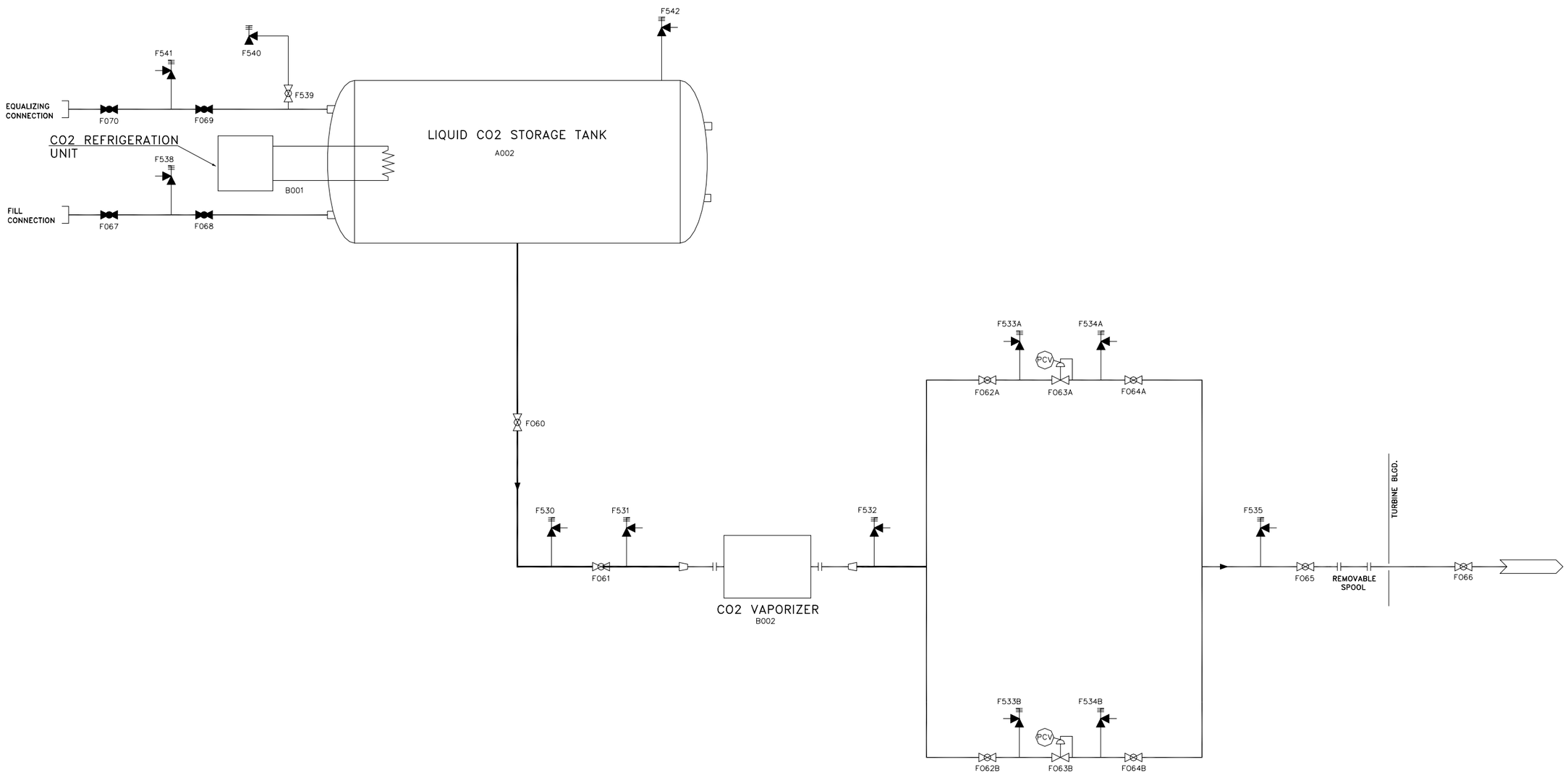

Figure 10.2-4. Generator Hydrogen and CO_2 System
Sh 2 of 2

10.3 TURBINE MAIN STEAM SYSTEM

The function of the Turbine Main Steam System (TMSS) is to convey steam generated in the reactor to the turbine plant. The TMSS is bounded by, but does not include, the seismic interface restraint, turbine stop valves and turbine bypass valves. Steam supply lines to other services, up to and including their isolation valves are also part of the TMSS.

The main steamline pressure relief system, main steamline flow restrictors, main steamline isolation valves (MSIVs), and main steam piping from the reactor nozzles through the outboard MSIVs to the seismic interface restraint are described in Subsections 5.2.2, 5.4.4, 5.4.5 and 5.4.9, respectively.

10.3.1 Design Bases

10.3.1.1 Safety (10 CFR 50.2) Design Bases

The TMSS is not required to perform or support any safety-related function. However, the supply system is designed:

(1) To accommodate operational stresses such as internal pressure and dynamic loads without failures.

(2) To provide a seismically analyzed fission product leakage path to the main condenser.

(3) With suitable accesses to permit inservice testing and inspections.

(4) To close the steam auxiliary valve(s) on an MSIV isolation signal. These valves fail closed on loss of electrical power to the valve actuating solenoid or on loss of pneumatic pressure.

The main steam system piping consists of four lines from the seismic interface restraint to the main turbine stop valves. The header arrangement upstream of the turbine stop valves allows them to be tested online, and supplies steam to the power cycle auxiliaries, as required.

The main steam system is analyzed, fabricated and examined to ASME Code Class 2 requirements, classified as Seismic Category II, and subject to pertinent QA requirements of Appendix B, 10 CFR 50. Inservice inspection shall be performed in accordance with ASME Section XI requirements for Code Class 2 piping. ASME authorized nuclear inspector and ASME Code stamping is not required.

Main steam piping from the seismic interface restraint to the main stop valves, main turbine bypass valves (including the steam auxiliary valves) is analyzed to demonstrate structural integrity under safe shutdown earthquake (SSE) loading conditions.

10.3.1.2 Non-Safety Power Generation Design Bases

The system is designed to deliver steam from the reactor to the turbine-generator system for a range of flows and pressures varying from warmup to rated conditions. It also provides steam to the reheaters, the steam jet air ejectors, the turbine gland seal system, the offgas system and the deaerating section of the main condenser and the turbine bypass system.

10.3.2 Description

10.3.2.1 General Description

The TMSS is illustrated in Figure 10.3-1. The system design data is provided in Table 10.3-1. The main steam piping consists of four lines from the seismic interface restrain to the main turbine stop valves. The four main steamlines are connected to a header upstream of the turbine stop valves to permit testing of the MSIVs during plant operation with a minimum load reduction. This header arrangement is also provided to ensure that the turbine bypass and other main steam supplies are connected to operating steamlines and not to idle lines. The main steam process downstream of the turbine stop valves is illustrated in Figure 10.3-2.

The design pressure and temperature of the main steam piping are provided in Table 10.3-1. The main steam-lines are classified as discussed in Section 3.2.

A drain line is connected to the low points of each main steamline, both inside and outside the containment. Both sets of drains are headered and connected with isolation valves to allow drainage to the main condenser. To permit intermittent draining of the steamline low points at low loads, orificed lines are provided around the final valve to the main condenser. The steamline drains, maintain a continuous downward slope from the steam system low points to the orifice located near the condenser. The drain line from the orifice to the condenser also slopes downward. To permit emptying the drain lines for maintenance, drains are provided from the line low points going to the radwaste system.

The drains from the steamlines inside containment are connected to the steamlines outside the containment to permit equalizing pressure across the MSIVs during startup and following a steamline isolation.

See Subsection 10.3.7.2 for COL information pertaining to allowable MSIV leakage.

10.3.2.2 Component Description

The TMSS lines are made of carbon steel and are sized for a normal steady-state velocity shown in Table 10.3-1. The lines are designed to permit hydrotesting following construction and major repairs without addition of temporary pipe supports.

10.3.2.3 System Operation

At low plant power levels, the TMSS may be used to supply steam to the turbine gland steam seal system. At high plant power levels, turbine gland sealing steam is normally supplied from the gland steam evaporator. Condensate from downstream of the Condensate Purification System (CPS) is evaporated in the Gland Steam Evaporator by cycle steam to produce non-radioactive sealing steam (see subsection 10.4.3) .

Steam is supplied to the crossaround steam reheaters in the Main Turbine system, when the turbine load exceeds approximately 15%. Supply steam pressure is controlled by regulating valves in the 15%, to approximately 60% load range.

If a large, rapid reduction load occurs, steam is bypassed directly to the condenser via the turbine bypass system (see Subsection 10.4.4 for a description of the turbine bypass system).

10.3.3 Evaluation

All components and piping for the TMSS are designed in accordance with the codes and standards listed in Section 3.2. This ensures that the TMSS accommodates operational stresses resulting from static and dynamic loads, including steam hammer and normal and abnormal environmental conditions. The COL applicant shall provide operating and maintenance procedures that include adequate precautions to avoid steam hammer and relief valve discharge loads (see Subsection 10.3.7.1 for COL license information requirements).

The break of a main steamline or any branch line does not result in radiation exposures in excess of the limits of 10 CFR 100 to persons located offsite, because of the safety features designed into the system. The main steamline pipe break accident is addressed in Chapter 15, and high energy pipe failure is discussed in Section 3.6.

10.3.4 Inspection and Testing Requirements

Inspection and testing will be in accordance with the requirements of Section 6.6. The main steamline will be hydrostatically tested to confirm leaktightness.

10.3.5 Water Chemistry (PWR)

This section applies to a pressurized water reactor (PWR), and is therefore not applicable.

10.3.6 Steam and Feedwater System Materials

Steam and feedwater component materials are identified within Section 5.2.

10.3.6.1 Fracture Toughness of Class 2 Components

The fracture toughness properties of the ferritic materials of these components meet the requirements of NC-2300, "Fracture Toughness Requirements for Materials" (Class 2) of ASME Code Section III, as invoked by Regulatory Guide 1.26, "Quality Group Classification and Standards for Water-, Steam-, and Radioactive-Waste-Containing Components of Nuclear Power Plants." This also includes the portion of the TMSS.

10.3.6.2 Materials Selection and Fabrication

The materials specified for use in Class 2 components conform to Appendix I to ASME Code Section III, and to Parts A, B, and C of Section II of the Code.

Regulatory Guide 1.84, "Design and Fabrication and Material, Code Case Acceptability, ASME Section III," describes acceptable code cases that are used in conjunction with the above specifications.

The following criteria are applicable to all components:

(1) Regulatory Guide 1.71, "Welder Qualification for Areas of Limited Accessibility," provides the following criteria for assuring the integrity of welds in locations of restricted direct physical and visual accessibility:

   a. The performance qualification should require testing of the welds when conditions of accessibility to production welds are less than 30 to 35 cm in any direction from the joint.

b. Requalification is required for different accessibility conditions or when other essential variables listed in the Code, Section IX, are changed.

c. The qualification and requalification tests required by (a) and (b) above may be waived, provided that the joint is to be 100% radiographed or ultrasonically examined after completion of the weldment. Examination procedures and acceptance standards should meet the requirements of ASME Code Section III. Records of the examination reports and radiographs should be retained and made part of the Quality Assurance documentation of the completed weld.

As alternative method, positions documented in Table 2-1 of NEDO–11209-04a Revision 8 (Reference 1) could be used.

(2) Regulatory Guide 1.37, "Quality Assurance Requirements for Cleaning of Fluid Systems and Associated Components of Water-Cooled Nuclear Power Plants" describes acceptable procedures for cleaning and handling Class 2 components of the steam and feedwater systems. Vented tanks with deionized or demineralized water are an acceptable source of water for final cleaning or flushing of finished surfaces. The oxygen content of the water in these vented tanks need not be controlled.

(3) Acceptance criteria for nondestructive examination of tubular products are given in ASME Code Section III, Paragraphs NC 2550 through 2570.

10.3.7 COL Information

10.3.7.1 Procedures to Avoid Steam Hammer and Discharge Loads

The COL applicant will provide operating and maintenance procedures that include adequate precautions to avoid steam hammer and discharge loads (Subsection 10.3.3).

10.3.7.2 MSIV Leakage

The COL applicant will provide the amount of allowable MSIV leakage (Subsection 10.3.2).

10.3.7.3 Conformance with Regulatory Guide 1.71

The COL applicant will provide the integrity of welds in locations of restricted direct physical and visual accessibility.

10.3.8 References

10.3-1 NEDO 11209-04a, "GE Nuclear Energy Quality Assurance Program Description," Revision 8

Table 10.3-1

Turbine Main Steam System Design Data

Main Steam Piping	
Design flow rate at 6.67 MPaA and 0.50% moisture kg/s (Mlbm/hr)	2432.61 (19.307)
Normal steady-state velocity, m/s (ft/s)	< 45.7 (150)
Number of lines	4
Nominal diameter, cm (in)	80 (32)
Minimum wall thickness, mm (in)	42.7 (1.68)
Design pressure, MPaG (psig)	8.62 (1250)
Design temperature, °C (°F)	302 (575)
Design code	ASME III, Class 2
Seismic design	Analyzed for SSE design loads

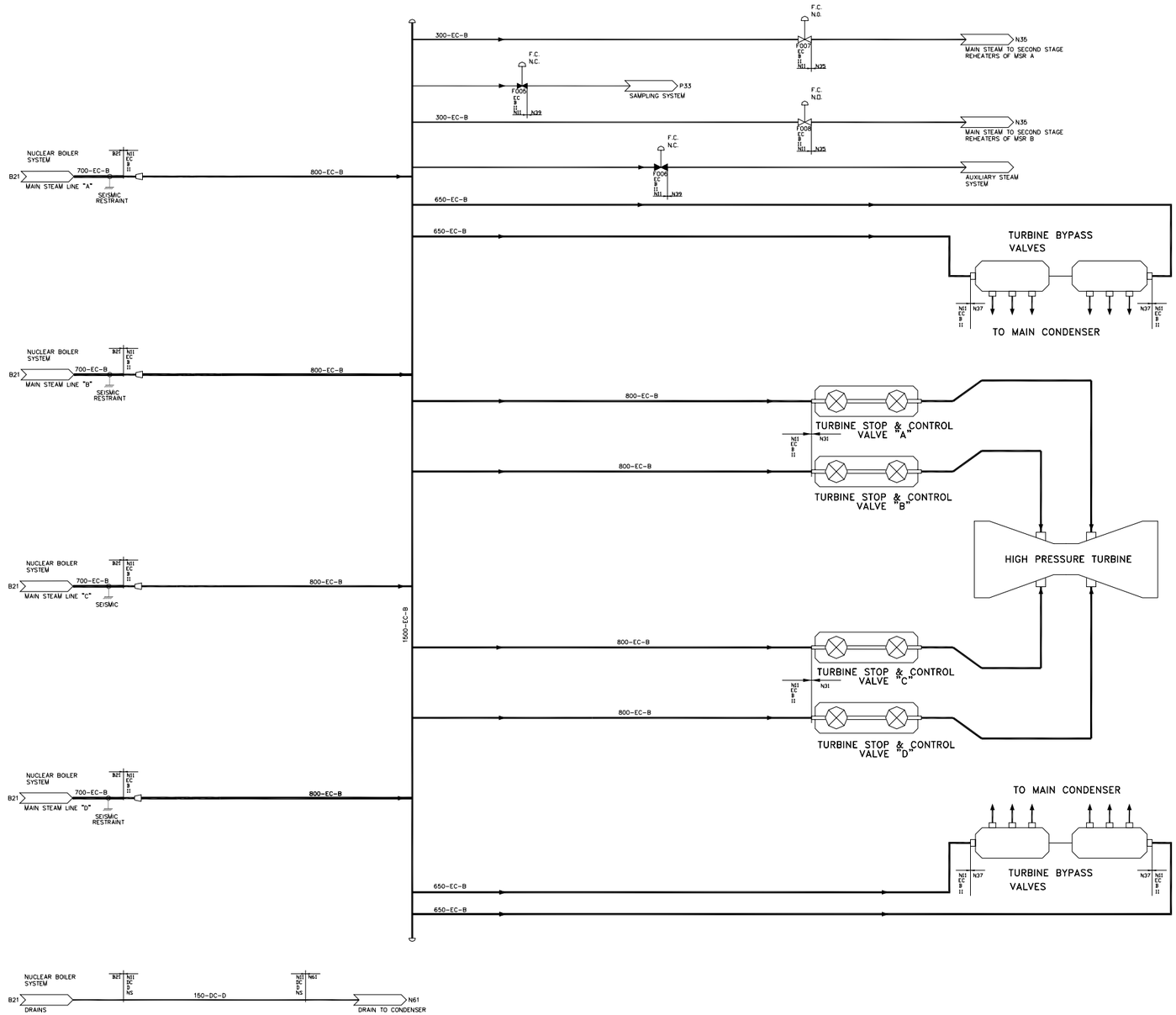

Figure 10.3-1. Turbine Main Steam System

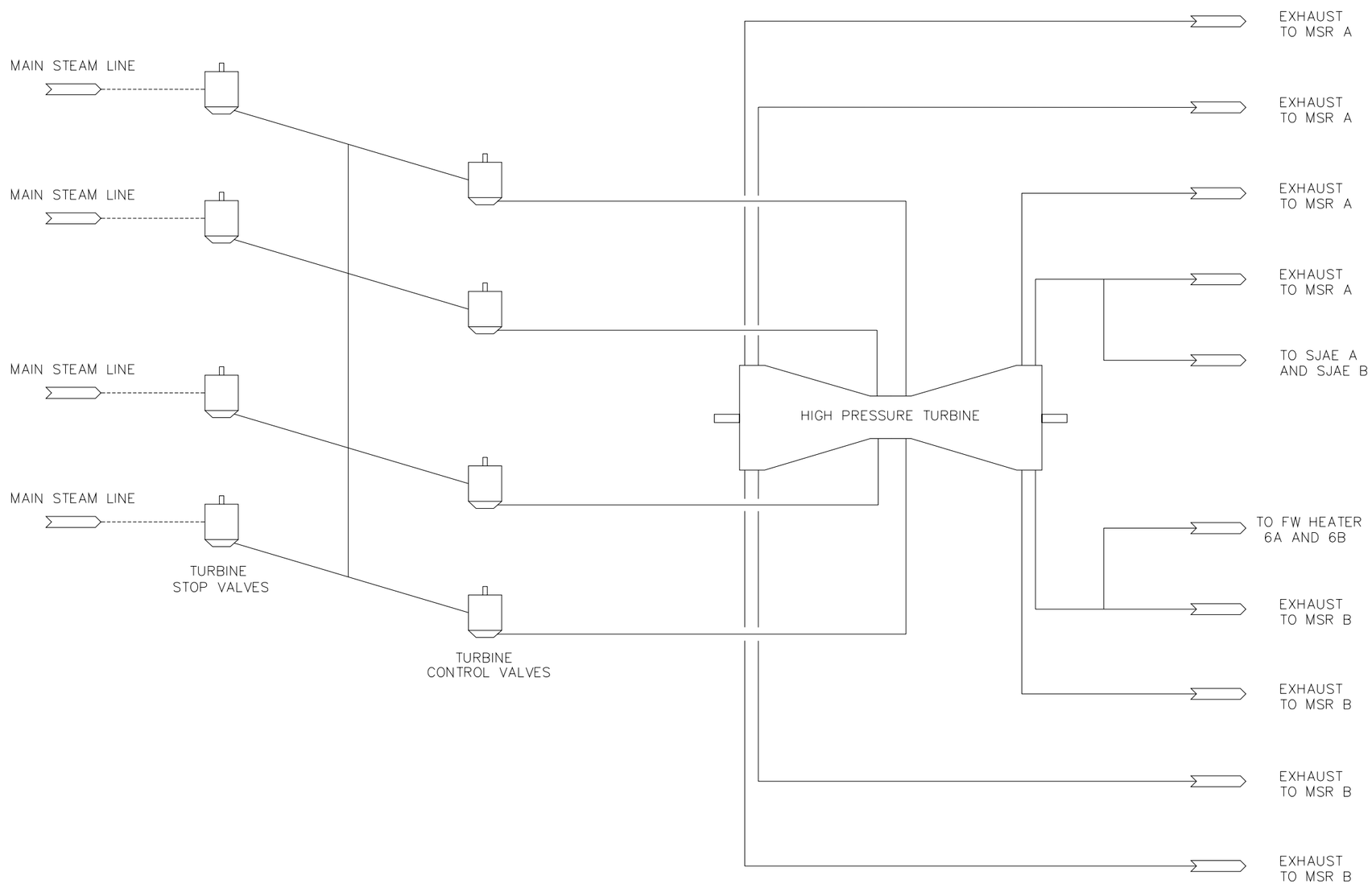

Figure 10.3-2. Main Turbine System
Sh 1 of 2

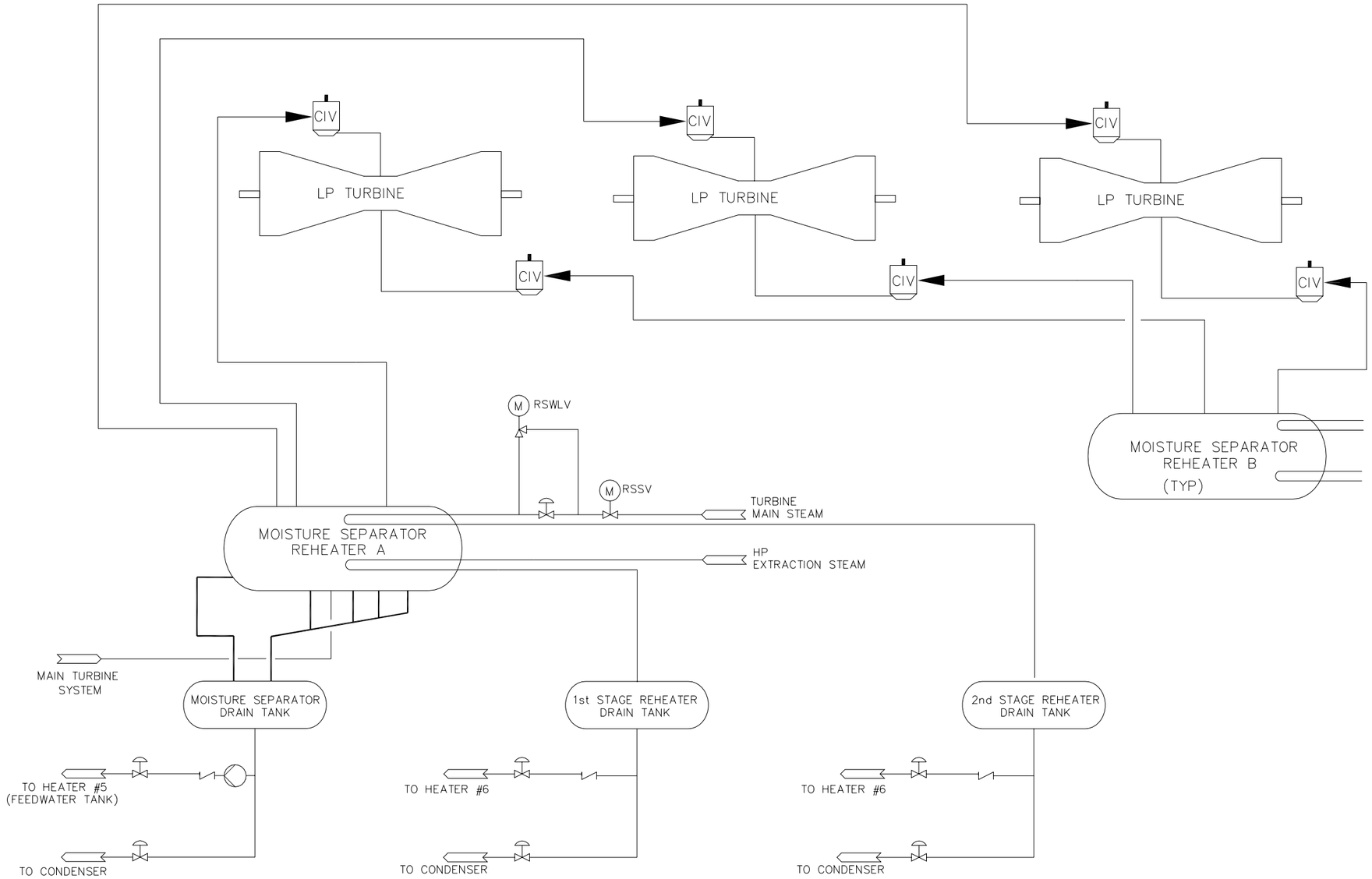

Figure 10.3-2. Main Turbine System

Sh 2 of 2

10.4 OTHER FEATURES OF STEAM AND POWER CONVERSION SYSTEM

This section provides discussions of each of the principal design features of the Steam and Power Conversion System.

10.4.1 Main Condenser

The main condenser is the steam cycle heat sink. During normal operation, it receives, condenses, deaerates and holds up for N^{16} decay the main turbine exhaust steam, and turbine bypass steam whenever the turbine bypass system is operated. The main condenser is also a collection point for other steam cycle miscellaneous drains and vents.

The main condenser is utilized as a heat sink in the initial phase of reactor cooldown during a normal plant shutdown.

10.4.1.1 Design Bases

Safety (10 CFR 50.2) Design Bases

The main condenser does not perform, support or ensure any safety-related function, and thus has no safety design basis. It is, however, designed with necessary shielding and controlled access to protect plant personnel from radiation. In addition, the main condenser hotwell provides a hold-up volume for MSIV fission product leakage. The supports and anchors are designed to withstand a safe shutdown earthquake.

Non-Safety Power Generation Design Bases

(1) The main condenser is designed to function as the steam cycle heat sink and miscellaneous drains and vents collection point.

(2) The main condenser is designed to accommodate the turbine bypass steam flow following a full load rejection, while allowing the turbine to operate in island operation mode. The main condenser is also designed to accommodate the turbine bypass steam flow following a turbine trip, while maintaining condenser pressure below the value that will inhibit bypass valve opening and below the value that will isolate the reactor.

(3) The main condenser is designed to minimize air inleakage and provides for the separation of noncondensable gases from the condensing steam and their removal by the main condenser air removal system (Subsection 10.4.2).

(4) At minimum normal operating hotwell water level, and normal full load condensate flow rate, the condenser provides a two-minute minimum condensate holdup time for N^{16} decay.

(5) The main condenser provides for deaeration of the condensate, such that condensate dissolved oxygen content does not exceed 10 ppb during normal operation above 50% load.

(6) The condenser is designed in accordance with requirements of the Heat Exchange Institute "Standards for Steam Surface Condensers."

10.4.1.2 Description

10.4.1.2.1 General Description

The main condenser for the ESBWR reference plant design is a multi-pressure, three-shell, reheating/deaerating unit. Each shell is located beneath its respective low-pressure turbine.

The three condenser shells are designated as the low-pressure shell, the intermediate-pressure shell, and the high-pressure shell. Each shell has at least two tube bundles. Circulating water flows in series through the three single-pass shells (Figure 10.4-1).

Each condenser shell hotwell is divided longitudinally by a vertical partition plate. The hotwells of the three shells are interconnected by condensate channels. The condensate pumps take suction from high-pressure condenser hotwell (Figure 10.4-2).

The condenser shells are located below the Turbine Building operating floor and are supported on the Turbine Building basemat. Failure of or leakage from a condenser hotwell during plant shutdown only results in a minimum water level in the Turbine Building condenser area. Expansion joints are provided between each turbine exhaust opening and the steam inlet connections of the condenser shell. Water seals and its level indication, if required, are provided around the entire outside periphery to prevent leakage through the expansion joints. Level indication provides detection of leakage through the expansion joint. Two low-pressure feedwater heaters are located in the steam dome of each shell. Piping is installed for hotwell level control and condensate sampling.

10.4.1.2.2 Component Description

Table 10.4-1 provides general condenser design data and reference data that is typical of condensers operating with closed loop circulating water systems. Nothing in this section precludes the use of a single pressure condenser and parallel (instead of series) circulating water system because these have no effect on the Nuclear Island.

10.4.1.2.3 System Operation

During plant operation, steam expanding through the low-pressure turbine is directed downward into the condenser through the exhaust openings in the bottom of the turbine casings and is condensed. The condenser also serves as a heat sink for several other flows, such as cascading heater drains, and miscellaneous turbine cycle drains and vents.

Other flows occurring periodically or continuously originate from

(1) the minimum recirculation flows of the condensate pumps,

(2) feedwater line startup flushing,

(3) turbine equipment clean drains,

(4) low-point drains,

(5) deaerating steam,

(6) makeup, etc.

During Anticipated Operational Occurrences (AOOs) conditions, the condenser is designed to receive turbine bypass steam and high level dump from the feedwater heaters, moisture separator

and reheater drain tanks. The condenser is also designed to receive relief valve discharges and any necessary venting from moisture separator/reheater vessels, feedwater heater shells, the gland seal steam header, steam seal regulator, and various other steam supply lines. Spray pipes and baffles are designed to provide protection of the condenser tubes and components from high energy inputs to the condenser. At startup, steam is admitted to the condenser shell to assist in condensate deaeration. The condensate is pumped from the condenser hotwell by the condensate pumps described in Subsection 10.4.7.

Because the main condenser operates at a vacuum, any leakage is into the shell side of the main condenser. Provision is made for detection of circulating water leakage into the shell side of the main condenser. Water leakage is detected by measuring the conductivity of sample water extracted at selected locations in the condenser. Sampling methods are described in Subsection 9.3.2. Radioactive leakage to the atmosphere via circulating water cannot occur.

Air inleakage and noncondensable gases, including hydrogen and oxygen gases contained in the turbine exhaust steam due to dissociation of water in the reactor, are collected in the condenser from which they are removed by the main condenser air removal system described in Subsection 10.4.2.

The condenser and water boxes are all welded carbon steel or low alloy ferritic steel. The tubes are stainless steel or titanium with compatible stainless steel or titanium carbon steel clad tube sheets depending on circulating water quality. The condenser is cooled by the circulating water system, as described in Subsection 10.4.5. Valves are provided in the circulating water system to permit any portion of the condenser to be isolated and removed from service.

Condensate is retained in the main condenser for a minimum of two minutes to permit radioactive decay before the condensate enters the condensate system. Before leaving the condenser, the condensate is deaerated to reduce the level of dissolved oxygen to the required concentration.

Hotwell level controls provide automatic makeup or rejection of condensate to maintain a normal level in the condenser hotwells. On low hotwell water level, the makeup control valves open and admit condensate to the hotwell from the condensate storage tank. When the hotwell is brought to within normal operating range, the valves close. On high water level in the hotwell, the condensate reject control valve opens to divert condensate from the condensate pump discharge (downstream of the polishers and Gland Steam, Steam Jet Air Ejector and Off-gas condensers) to the condensate storage tank; rejection is stopped when the hotwell level falls to within normal operating range. The hotwell level signals and controller are respectively at least triple and dual redundant to ensure the availability of the condensate pumps.

During the initial cooling period after plant shutdown, the main condenser removes residual heat from the reactor coolant system via the turbine bypass system. However, if the condenser is not available to receive steam via the turbine bypass system, the reactor coolant system can still be safely cooled down using only Nuclear Island systems.

10.4.1.3 Evaluation

During operation, radioactive steam, gases and condensate are present in the shells of the main condenser. The anticipated inventory of radioactive contaminants during operation and shutdown is discussed in Sections 11.1 and 11.3.

Necessary shielding and controlled access for the main condenser are provided (Sections 12.1 and 12.3).

Hydrogen buildup during operation is not expected to occur due to provisions for continuous evacuation of the main condenser. During shutdown, significant hydrogen buildup in the main condenser does not occur because main condenser is not receiving enough steam flow to cause significant hydrogen buildup.

Main condenser tubeside circulating water is treated to limit algae growth and prevent long-term corrosion of the tubes and other components. Corrosion of the outside of the condenser tubing is limited by maintaining strict water quality using the condensate cleanup system described in Subsection 10.4.6. The construction materials used for the main condenser are selected such that the potential for corrosion by galvanic and other effects is minimized.

The potential flooding which would result from failure of the condenser is discussed in Section 3.4, which shows that failure of the condenser does not adversely affect any equipment required for safe shutdown of the reactor.

The loss of main condenser vacuum causes a turbine trip, reactor scram, bypass valve closure, and closure of the MSIVs. The effects of a turbine trip are discussed in Chapter 15. Should the turbine stop, control or bypass valves fail to close on loss of condenser vacuum, two rupture diaphragms on each turbine exhaust hood protect the condenser and turbine exhaust hoods against overpressure.

10.4.1.4 Tests and Inspections

Each condenser shell is to receive a field hydrostatic test before initial operation. This test consists of filling the condenser shell with water and, at the resulting static head, inspecting all tube joints, accessible welds, and surfaces for visible leakage and/or excessive deflection. Each condenser water box is to receive a field hydrostatic test with all joints and external surfaces inspected for leakage.

10.4.1.5 Instrumentation Applications

10.4.1.5.1 Hotwell Water Level

The condenser hotwell water level is measured by at least three level transmitters. These transmitters provide signals to an indicator, annunciator trip units, the plant computer, and the hotwell level control system. Level is controlled by two sets of modulating control valves. Each set consists of a normal and an emergency valve.

One set of valves allows water to flow from the condensate storage tank to the condenser hotwell as the level drops below the setpoint. If the level increases above another setpoint, the second set of valves located on the discharge of the condensate pumps opens to allow condensate to be pumped back to the storage tank.

10.4.1.5.2 Pressure

Condenser pressure is measured by gauges, pressure switches, and electronic pressure transducers. These instruments provide signals to annunciators, trip units, the Turbine Control System, and to the Steam Bypass and Pressure Control System. In addition, four independent

and redundant safety-related condenser pressure transmitters are included in the Nuclear Boiler System to provide signals for reactor scram and MSIV closure.

As condenser pressure increases above normal levels, an annunciator is activated. A further increase in pressure results in a turbine trip and reactor scram.. As pressure increases toward a complete loss of vacuum, the main steam isolation valves and the turbine bypass valves are closed to prevent overpressurization of the condenser shell.

The approximate setpoints for these functions are provided in Table 10.4-1.

10.4.1.5.3 Temperature

Temperature is measured in each LP turbine exhaust hood by temperature controllers. The controllers modulate a control valve in the water spray line protecting the exhaust hoods from overheating.

Circulating water temperatures are monitored upstream and downstream of each condenser tube bundle and are fed to the plant computer and the main control room instrumentation for use during periodic condenser performance evaluations.

10.4.1.5.4 Leakage

Leakage of circulating water into the condenser shell is monitored by the online instrumentation and the process sampling system described in Subsection 9.3.2.

Conductivity of the condensate is continuously monitored at selected locations in the condenser. Conductivity and sodium are continuously monitored at the discharge of the condensate pumps. High condensate conductivity and sodium content, which indicate a condenser tube leak, are individually alarmed in the main control room.

10.4.2 Condenser Air Removal system

Noncondensable gases are removed from the power cycle by the Condenser Air Removal system. The Condenser Air Removal system removes the hydrogen and oxygen produced by radiolysis of water in the reactor, and other power cycle noncondensable gases, and exhausts them to the offgas system during plant power operation, and to the Turbine Building Compartment Exhaust (TBCE) system (The Turbine Building HVAC system is described in Subsection 9.4.4) at the beginning of each startup.

10.4.2.1 Design Bases

Safety (10 CFR 50.2) Design Bases

The Condenser Air Removal system does not perform, ensure or support any safety-related function, and thus, has no safety design basis.

Non-Safety Power Generation Design Bases

(1) The Condenser Air Removal system is designed to remove air and other power cycle non-condensable gases from the condenser during plant startup, cooldown, and power operation and exhaust them to the Offgas System or TBCE system.

(2) The Condenser Air Removal system establishes and maintains a vacuum in the condenser during power operation by the use of steam jet air ejectors, and by the mechanical vacuum pumps during early startup.

10.4.2.2 Description

For the Condenser Air Removal system components that may contain radioactive materials, Regulatory Guides 1.33 and 1.28, as they relate to the quality assurance programs, are applied. The applicability of Regulatory Guide 1.33 will be analyzed in the COL phase (see subsection 10.4.10.3).

The components of the Condenser Air Removal system are designed to Quality Group D as defined in Regulatory Guide 1.26, and are not designed to safe shutdown earthquake seismic standards. The quality standards meet the requirements of 10 CFR 50.55a for water- and steam-containing components that may contain radioactive materials but are not part of the reactor coolant pressure boundary.

The Condenser Air Removal system (Table 10.4-2 and Figure 10.4-3) consists of two 100%-capacity, double stage, steam jet air ejector (SJAE) units (complete with intercondenser) for power plant operation, and two 50%-capacity mechanical vacuum pumps for use during startup. The last stage of the SJAE is a noncondensing stage. One SJAE unit is normally in operation and the other is on standby.

During the initial phase of startup, when the desired rate of air and gas removal exceeds the capacity of the steam jet air ejectors, the mechanical vacuum pumps establish a vacuum in the main condenser and other parts of the power cycle. The discharge from the vacuum pumps is then routed to the TBCE system, because there is then little or no effluent radioactivity present. Radiation detectors in the TBCE system and plant vent stack alarm in the main control room if abnormal radioactivity is detected (Section 7.5). Radiation monitors are provided on the main steam lines, which trip the vacuum pump if abnormal radioactivity is detected in the steam being supplied to the condenser.

The SJAEs are placed in service to remove the gases from the main condenser after vacuum is established in the main condenser by the mechanical vacuum pumps and when sufficient nuclear steam pressure is available.

During normal power operations, the SJAEs are normally driven by cross-around steam, with the main steam supply on automatic standby. The main steam supply, however, is normally used during startup and low load operation, and auxiliary steam is available for normal use of the SJAEs during early startup, as an alternative to the main steam or if the mechanical vacuum pumps prove to be unavailable.

10.4.2.3 Evaluation

The offgas from the main condenser is one source of radioactive gas in the station. Normally, it includes the activation gases nitrogen-16, oxygen-19, and nitrogen-13, plus the radioactive noble-gas parents of strontium-89, strontium-90, and cesium-137. An inventory of radioactive contaminants in the effluent from the SJAEs is evaluated in Section 11.3.

Steam supply to the second-stage ejector is maintained at a minimum specified flow to ensure adequate dilution of hydrogen and prevent the offgas from reaching the flammability limit of

hydrogen. In addition, maximum power limits are placed on operation of the mechanical vacuum pumps to ensure the flammability limit of hydrogen is not reached.

The Condenser Air Removal system, which is part of the Main Condenser and Auxiliaries system, has no safety-related function (Section 3.2) and does not interface with any safety-related structure, system or component, and thus, failure of the system would not compromise any safety-related system or component, and would not prevent safe reactor shutdown.

Should the system fail completely, a gradual reduction in condenser vacuum would result from the buildup of noncondensable gases. This reduction in vacuum would first cause a lowering of turbine cycle efficiency due to the increase in turbine exhaust pressure. If the Condenser Air Removal system remained inoperable, condenser pressure would then reach the turbine trip setpoint and a turbine trip would result. The loss of condenser vacuum incident is discussed in Section 15.2.

10.4.2.4 Tests and Inspections

Testing and inspection of the system is performed prior to plant operation in accordance with applicable codes and standards.

Components of the system are continuously monitored during operation to ensure satisfactory performance. Periodic in-service tests and inspections of the condenser air removal system are performed in conjunction with the scheduled maintenance outages.

10.4.2.5 Instrumentation Applications

Local and remote indicating devices for parameters such as pressure, temperature, and flow are provided as required for monitoring the system operation. Dilution steam flow and vacuum pump and SJAE suction valve status is monitored in the main control room.

10.4.2.5.1 Steam Jet Air Ejectors

Steam pressure and flow is continuously monitored and controlled in the ejector steam supply lines. Redundant pressure controllers sense steam pressure at the second-stage inlet and modulate the steam supply control valves upstream of the air ejectors. The steam flow transmitters provide inputs to logic devices. These logic devices provide for isolating the main condenser offgas flow to the air ejector unit on a two-out-of-three logic, should the steam flow drop below acceptable limits for offgas steam dilution.

10.4.2.5.2 Mechanical Vacuum Pump

Pressure is measured on the suction line, of the mechanical vacuum pumps by a pressure transmitter. Upon reaching a preset vacuum, the pressure energizes a solenoid valve, which allows additional seal water to be pumped to the vacuum pumps. Seal pump discharge pressures are locally monitored. Seal water cooler discharge temperature is measured by a temperature indicating transmitter. On high temperature, the measured temperature activates an alarm in the main control room. The vacuum pump exhaust streams are discharged to the TBCE system, which provides for radiation monitoring of the system effluents prior to their release through the monitored vent stack to the atmosphere.

Each vacuum pump is tripped and its discharge valve is closed upon receiving a main steam high-high radiation signal.

10.4.3 Turbine Gland Seal System

The Turbine Gland Seal System (TGSS) prevents the escape of radioactive steam from the turbine shaft/casing penetrations and valve stems and prevents air inleakage through sub-atmospheric turbine glands.

10.4.3.1 Design Bases

Safety (10 CFR 50.2) Design Bases

The TGSS does not perform, ensure or support any safety-related function, and thus, has no safety design basis.

Non-Safety Power Generation Design Bases

(1) The TGSS is designed to prevent atmospheric air leakage into the turbine casings and to prevent radioactive steam leakage out of the casings of the turbine-generator.

(2) The TGSS returns the condensed steam to the condenser and exhausts the non-condensable gases, via the Turbine Building compartment exhaust system, to the plant vent.

(3) The TGSS has enough capacity to handle steam and air flows resulting from twice the normal packing clearances.

10.4.3.2 Description

10.4.3.2.1 General Description

For the TGSS components that may contain radioactive materials, Regulatory Guides 1.33 and 1.28, as they relate to the quality assurance programs, are applied. The applicability of Regulatory Guide 1.33 will be analyzed in the COL phase (see subsection 10.4.10.3).

The TGSS provides for the collection and condensation of sealing steam and the venting and treatment of non-condensable gases. The components are designed to Quality Group D as defined in Regulatory Guide 1.26, and are not designed to safe shutdown earthquake seismic standards.

The turbine gland seal system is illustrated in Figure 10.4-4. The turbine gland seal system consists of a gland steam evaporator, sealing steam pressure regulator, sealing steam header, a gland steam condenser, with two full-capacity exhauster blowers, and the associated piping, valves and instrumentation.

10.4.3.2.2 System Operation

The annular space through which the turbine shaft penetrates the casing is sealed by steam supplied to the shaft seals. Where the gland seals operate against positive pressure, the sealing steam flows either inwards for collection at an intermediate leak-off point or, outwards and into the vent annulus. Where the gland seals operate against vacuum, the sealing steam either is drawn into the casing or leaks outward to a vent annulus. At all gland seals, the vent annulus is

maintained at a slight vacuum, and receives air in-leakage from the outside. From each vent annulus, the air-steam mixture is drawn to the gland steam condenser.

The seal steam header pressure is regulated automatically by a pressure controller. During startup and low load operation, the seal steam is supplied from the Auxiliary Boiler. Above a certain plant load, seal steam is evaporated by the Gland Steam Evaporator. The source of steam for the evaporator is plant heat cycle (MSR). By employing the evaporator, the plant power operation can be maintained without appreciable radioactivity releases even if highly abnormal levels of radioactive contaminants are present in the process steam. At all loads, gland sealing can be achieved using clean steam directly from the Auxiliary Boiler or the evaporator. In low load and normal operation, main steam is a backup supply to the seal steam.

The outer portion of all glands of the turbine and main steam valves is connected to the gland steam condenser, which is maintained at a slight vacuum by the exhauster blower. During plant operation, the gland steam condenser and one of the two installed 100% capacity motor-driven blowers are in operation. The exhauster blower to the TBCE system effluent stream is continuously monitored prior to being discharged. The gland steam condenser is cooled by main condensate flow.

10.4.3.3 Evaluation

The TGSS is designed to prevent leakage of radioactive steam from the main turbine shaft glands and the valve stems. The high-pressure turbine shaft seals must accommodate a range of turbine shell pressure from full vacuum to approximately 30 kPaG (4.35 psig). The low-pressure turbine shaft seals operate against a vacuum at all times. The gland seal outer portion steam/air mixture is exhausted to the gland steam condenser via the seal vent annulus (i.e., end glands), which is maintained at a slight vacuum. Because clean steam from the gland steam evaporator is normally used as seal steam during normal operation, the radioactive content of the seal steam, which eventually exhausts to the plant vent and the atmosphere (Section 12.2), makes a negligible contribution to overall plant radiation release. In addition, the auxiliary steam system is designed to provide a 100% backup to the normal gland seal process steam supply. A full capacity gland steam condenser is provided and equipped with two 100% capacity blowers.

Relief valves on the seal steam header prevent excessive seal steam pressure. The valves discharge to the condenser shell.

10.4.3.4 Tests and Inspections

Testing and inspection of the TGSS will be performed prior to plant operation. Components of the system are continuously monitored during operation to ensure that they are functioning satisfactorily. Periodic tests and inspections may be performed in conjunction with maintenance outages.

10.4.3.5 Instrumentation Application

10.4.3.5.1 Gland Steam Condenser Exhausters

Pressure

Gland steam condenser exhauster suction pressure is continuously monitored and reported to the main control room and plant computer. A low vacuum signal actuates a main control room annunciator.

Level

Water levels in the gland steam condenser drain leg are monitored and makeup is added as required to maintain loop seal integrity. Abnormal levels are alarmed in the main control room.

Effluent Monitoring

The TGSS effluents are first monitored by a system-dedicated, continuous, radiation monitor installed on the gland steam condenser exhauster blower discharge. High monitor readings are alarmed in the main control room. The system effluents are then discharged to the Turbine Building compartment exhaust system and the plant vent stack, where further effluent radiation monitoring is performed. (See Subsection 10.4.10.1 for COL information pertaining to the radiological analysis of the TGSS effluents.)

10.4.3.5.2 Sealing Steam Header

Sealing steam header pressure is monitored and reported to the main control room and plant computer. Header steam temperature is also measured and recorded.

10.4.3.5.3 Gland Steam Evaporator

Level

Levels in the gland steam evaporator are monitored and reported to the main control room and plant computer. Abnormal levels are alarmed in the main control room.

Pressure

Pressure of the gland steam evaporator discharge line is continuously monitored and reported to the main control room and plant computer. Abnormal values are alarmed in the main control room.

10.4.4 Turbine Bypass System

The Turbine Bypass System (TBS) provides the capability to discharge main steam from the reactor directly to the condenser to minimize step load reduction transient effects on the Nuclear Boiler System (NBS). The TBS is also used to discharge main steam during reactor hot standby and cool-down operations. Operation of the TBS eliminates the need to rely solely on safety-related systems for shutting down the plant during normal operations.

The TBS satisfies General Design Criterion 4 in that failure of the TBS due to a pipe break or malfunction of the TBS would not adversely affect any safety-related system or component (i.e., those necessary for safe shutdown or accident prevention or mitigation).

10.4.4.1 Design Bases

Safety (10 CFR 50.2) Design Bases

The TBS does not perform, ensure or support any safety-related function, however it does mitigate the effects of AOOs (which are defined as part of normal operation in 10 CFR 50 Appendix A and General Design Criterion 10) and Anticipated Transients Without Scram events, if some of the MSIVs remain open and the turbine stop/control valves are closed. The TBS is analyzed to demonstrate structural integrity under safe shutdown earthquake (SSE) loading conditions.

Non-Safety Power Generation Design Bases

(1) The TBS has a capacity of 110% of the rated main steam flow.

(2) The TBS is designed to bypass steam to the main condenser during plant startup and to permit a normal cooldown of the reactor from a hot shutdown condition to a point consistent with initiation of shutdown cooling operation.

(3) The TBS is designed, in conjunction with other reactor systems, to provide for a full load rejection or turbine trip without reactor trip and without lifting of the reactor SRVs.

(4) No single failure can disable more than 50% of the installed bypass capacity.

10.4.4.2 Description

10.4.4.2.1 General Description

The TBS in the ESBWR Reference Plant design comprises twelve Turbine Bypass Valves (TBV) mounted on four chests (three valves per chest) connected to the TMSS Main Steam Line equalizer. The outlets of TBVs are connected to the Main Condenser via pressure reducers. The system and its components are shown in Figures 10.4-5 and 10.4-6.

Other possible design and configurations of the TBV could be proposed in the COL phase (see subsection 10.4.10.2 for COL information).

The TBS, in combination with the reactor systems, provides the capability to shed 100% of the TG rated load without reactor trip and without the operation of safety-relief valves (SRVs).

The TBS system is provided with an uninterruptible redundant power source. The worst case of an AOO with a single failure would result in a loss of no more than 50% of bypass capacity.

10.4.4.2.2 Component Description

In the ESBWR Reference Plant design each valve chest is provided and houses three individual bypass valves. Each bypass valve is an angle body type valve operated by hydraulic fluid pressure with spring action to close. The valve chest assembly includes hydraulic supply and drain piping, three hydraulic accumulators (one for each bypass valve), servo valves, fast acting servo valves, and valve position transmitters.

Other possible design and configurations of the TBV could be proposed in the COL phase (see subsection 10.4.10.2 for COL information).

The turbine bypass valves are operated by the turbine hydraulic fluid power unit, being possible to isolate the high-pressure fluid to the turbine valves while supplying hydraulic fluid to the bypass valves. High-pressure hydraulic fluid is provided at the bottom valve actuator and drained back to the fluid reservoir. Sparger piping distributes the TBV discharge steam within the condenser.

10.4.4.2.3 System Operation

The turbine bypass valves are opened by redundant signals received from the Steam Bypass and Pressure Control System whenever the actual steam pressure exceeds the preset steam pressure by a small margin. This occurs when the amount of steam generated by the reactor cannot be entirely used by the turbine. This bypass demand signal causes fluid pressure to be applied to the operating cylinder, which opens the first of the individual valves. As the bypass demand increases, additional bypass valves are opened, dumping the steam to the condenser. The bypass valves are equipped with fast acting servo valves to allow rapid opening of bypass valves upon turbine trip or generator load rejection.

The bypass valves automatically trip closed whenever the condenser pressure increases to a preset value. Individual bypass valves close on loss of electrical power or hydraulic system pressure to their operator. Individual bypass valve hydraulic accumulators have capability to stroke the valves at least three times with hydraulic power unit failure.

When the reactor is operating in the automatic load-following mode, a small load reduction can be accommodated without opening the bypass valves, and a larger load reduction can be accommodated with momentary opening of the bypass valves.

When the plant is at zero power, hot standby or initial cool-down, the system is operated manually by the control room operator or by the plant automation system. The measured reactor pressure is then compared against, and regulated to, the pressure set by the operator or automation system.

The turbine bypass control system can malfunction in either the open or closed mode, but requires multiple failures to do so. The effects of these potential failure modes on the NSSS and turbine system are addressed in Chapter 15. If the bypass valves fail open, additional heat load is placed on the condenser. If this load is great enough, the turbine is tripped on high-high condenser pressure. Ultimate overpressure protection for the condenser is provided by rupture discs. If the bypass valves fail closed, the NBS relief valves permit controlled cool-down of the reactor.

The turbine bypass system valves and piping conform to the applicable codes as referenced in Chapter 3.

10.4.4.3 Evaluation

The TBS does not perform or support any safety-related function. There is no safety-related equipment in the vicinity of the TBS, except four Class 1E position sensors at each bypass valve that provide valve status to the RPS logic. These Class 1E bypass valve position sensors are fail-safe such that they cannot prevent actuation of the reactor protection function. All high energy lines of the TBS are located in the Turbine Building.

The effects of a malfunction of the turbine bypass system valves and the effects of such a failure on other systems and components are evaluated in Chapter 15.

10.4.4.4 Inspection and Testing Requirements

Before the TBS is placed in service, all turbine bypass valves are tested for operability. The steam lines are hydrostatically tested to confirm leak-tightness. Pipe weld joints are inspected by radiography per ASME III, Class 2 requirements upstream and ASME B31.1 downstream of the valve chest. The bypass valves are tested while the unit is in operation. Periodic inspections are performed on a rotating basis within a preventive maintenance program in accordance with manufacturer's recommendations.

10.4.4.5 Instrumentation Applications

Main steam pressure is redundantly measured in the reactor dome by at least six electronic pressure transmitters. Under normal conditions a validated narrow range pressure signal is used by the Steam Bypass and Pressure Control (SB&PC) System. If one of the signals fails, an alarm activates, but the bypass control and/or reactor pressure regulation is unaffected.

Input to the system also includes load demand and load reference signals from the turbine speed load control system. The SB&PC System uses these three signals to position the turbine control valves and the bypass valves. A complete description of the control system is included within Chapter 7.

10.4.5 Circulating Water System

The Circulating Water System (CIRC) provides cooling water for removal of the power cycle waste heat from the main condensers and transfers this heat to the Normal Power Heat Sink (NPHS).

The CIRC does not interface with any safety-related structure, system or component, and no CIRC failure could adversely affect any safety-related structure, system or component. (See Subsection 10.4.5.3.)

10.4.5.1 Design Bases

Safety (10 CFR 50.2) Design Bases

The CIRC does not perform, ensure or support any safety function, and thus, has no safety design basis.

Non-Safety Power Generation Design Bases

(1) The CIRC supplies cooling water at a sufficient flow rate to condense the steam in the condenser, as required for optimum heat cycle efficiency.

(2) The CIRC is automatically isolated by a two out of three coincident logic in the event of gross leakage into the Turbine Building (TB) condenser area to prevent flooding of the Turbine Building.

10.4.5.2 Description

10.4.5.2.1 General Description

The Circulating Water System (Figure 10.4-1) consists of the following components:

(1) screen house and intake screens;

(2) pumps and pump discharge valves;

(3) condenser water boxes and piping and valves;

(4) condenser tube cleaning equipment;

(5) water box drain subsystem; and

(6) related support facilities for inventory makeup and blowdown;

Table 10.4-3 includes the NPHS temperature range for water entering the CIRC , and the CIRC delivered water to the main condenser temperature range.

The cooling water is circulated by four, fixed speed, motor-driven pumps.

The pumps are arranged in parallel and discharge lines combine into two parallel circulating water supply lines to the main condenser. Each circulating water supply line connects to a low-pressure condenser shell inlet water box. An interconnecting line fitted with a butterfly valve is provided to connect both circulating water supply lines. The discharge of each pump is fitted with a fast actuated motor-operated or electro-hydraulically operated butterfly valve. This arrangement permits isolation and maintenance of any one pump while the others remain in operation and minimize the backward flow through a tripped pump.

The CIRC and condenser are designed to permit isolation of each set of the three series connected tube bundles to permit repair of leaks and cleaning of water boxes while operating at reduced power.

The CIRC includes water box vents to help fill the condenser water boxes during startup and removes accumulated air and other gases from the water boxes during normal operation.

A chemical additive subsystem is also provided to prevent the accumulation of biological growth and chemical deposits within the wetted surfaces of the system.

10.4.5.2.2 Component Description

Codes and standards applicable to the CIRC are listed in Section 3.2. The system is designed and constructed in accordance with quality Group D specifications.

Table 10.4-3 provides reference parameters for the major components of the CIRC .

10.4.5.2.3 System Operation

The CIRC operates continuously during power generation, including startup and shutdown. Pumps and condenser isolation valve actuation is controlled by locally mounted hand switches or by remote manual switches located in the main control room.

The circulating water pumps are tripped and the pump and condenser isolation valves as well as circulating lines interconnecting valve are closed in the event of a system isolation signal from the TB condenser area high-high water level switches. Three level switches are provided in the TB condenser area and the water level trip is initiated upon high-high level detection in two of the three level switches. A TB condenser area high level alarm is provided in the control room. The water level trip is set high enough to prevent inadvertent plant trips from unrelated failures, such as a sump overflow.

Draining of any set of series connected condenser water boxes is initiated by closing the associated condenser isolation valves and opening the drain connection and water box vent valve. When the suction standpipe of the condenser drain pump is filled, the pump is manually started. A low level switch is provided in the standpipe, on the suction side of the drain pump. This switch automatically stops the pump in the event of low water level in the standpipe to protect the pump.

10.4.5.3 Evaluation

The CIRC is not a safety-related system; however, a flooding analysis of the Turbine Building is performed on the CIRC, postulating a complete rupture of a single expansion joint. The analysis assumes that the flow into the Turbine Building comes from both the upstream and downstream side of the break and also conservatively assumes that one system isolation valve does not fully close.

Based on the above conservative assumptions, the CIRC and related facilities are designed such that the selected combination of plant physical arrangement and system protective features ensures that all credible potential circulating water spills inside the Turbine Building remain confined inside the Turbine Building condenser area. Further, plant safety is ensured in case of multiple CIRC failures or other negligible probability CIRC related events by plant safety-related general flooding protection provisions (Section 3.4).

10.4.5.4 Tests and Inspections

The CIRC and related systems and facilities are tested and checked for leakage integrity prior to initial plant startup and, as may be appropriate, following major maintenance and inspection.

All active and selected passive components of the CIRC are accessible for inspection and maintenance/testing during normal power station operation.

10.4.5.5 Instrumentation Applications

Temperature monitors are provided upstream and downstream of each condenser shell section.

Indication is provided in the control room to identify open and closed positions of mechanically-operated butterfly valves in the CIRC piping.

All major CIRC valves, which control the flow path, can be operated by local controls or by remote controls located at the main control room. The pump discharge isolation valves are interlocked with the circulating water pumps so that when a pump is started, its discharge valve is opening while the pump is coming up to speed, thus assuring that there is water flow through the pump. When a pump is stopped or trips, the discharge valve closes automatically to prevent or minimize backward rotation of the pump and motor.

Level switches or transmitters monitor water level in the condenser discharge water boxes and provide a permissive for starting the circulating water pumps. These level switches ensure that the supply piping and the condenser water boxes are full of water prior to circulating water pump startup, thus preventing water pressure surges from damaging the supply piping or the condenser.

Monitoring the performance of the Circulating Water System is accomplished by differential pressure transducers across each half of the condenser with remote differential pressure indicators located in the main control room. Temperature signals from the supply and discharge sides of the condenser are transmitted to the plant computer for recording, display and condenser performance calculations.

A permanent flowmeter installation shall be analyzed in the COL phase (see subsection 10.4.10.4 for COL information).

To prevent icing and freeze-up, if the NPHS does not have the capability to control the minimum temperature when the ambient temperature drops below 0°C, warm water from the discharge side of the condenser would be recirculated back to the screen house intake. Temperature elements, located in each condenser supply line and monitored in the main control room, would be utilized in throttling the warm water recirculation valve, to maintain the minimum inlet temperature of approximately 5ºC.

10.4.5.6 Flood Protection

Three level switches are provided in the Turbine Building to trip the pumps and close the valves of the CIRC in case of a system component failure. The flooding signal initiates from a high-high water level detection in two of the three switches. In the hypothetical situation of a circulating water system pipe, waterbox, or expansion joint failure, if not detected and isolated, the water discharged would cause internal Turbine Building flooding up to slightly above grade level, with excess water potentially spilling over on site. If a failure occurred within a condensate system (condenser shell side), the resulting flood level would be below grade level due to the relatively small hotwell inventory relative to the Turbine Building capacity.

Failure of other systems that have piping or components inside the Turbine Building, such as the Turbine Component Cooling Water System, Reactor Component Cooling Water System and Plant Service Water System, would also produce less flooding in the Turbine Building than what is considered in multiple CIRC failures. In either event, the flooding of the Turbine Building would not affect the limited safety-related equipment in that building, because such equipment located inside the Turbine Building and all plant safety-related facilities are protected against site surface water intrusion and plant safety-related facility flooding through Turbine Building interconnecting tunnels is avoided.

10.4.5.7 Portions of the CIRC Outside of Scope of ESBWR Standard Plant

The portion outside the ESBWR Standard Plant includes:

(1) screen house and intake screens;

(2) pumps and pump discharge valves; and

(3) related support facilities such as makeup water, system water treatment, inventory blowdown, and general maintenance.

10.4.5.7.1 Safety (10 CFR 50.2) Design Basis (Interface Requirements)

None

10.4.5.7.2 Non-Safety Power Generation Design Bases (Interface Requirements)

The COL applicant shall provide the following system design features and additional information, which are site dependent:

(1) Compatible design as described in Subsection 10.4.5.2;

(2) Evaluation per Subsection 10.4.5.3;

(3) Tests and inspections per Subsection 10.4.5.4;

(4) Instrument applications per Subsection 10.4.5.5; and

(5) Flood protection per Subsection 10.4.5.6.

10.4.5.8 Normal Power Heat Sink (Conceptual Design)

The Normal Power Heat Sink is outside the ESBWR Standard Plant scope.

The reference design for the ESBWR Normal Power Heat Sink utilizes two natural draft cooling towers. Water circulation, chemical control, and inventory blowdown are all part of the Circulating Water System. Nothing in this section precludes the use of mechanical draft cooling towers or once-through cooling systems because these have no effect on the Nuclear Island.

10.4.6 Condensate Purification System

The Condensate Purification System (CPS) purifies and treats the condensate as required to maintain reactor feedwater purity, using filtration to remove suspended solids, including corrosion products, and ion exchange to remove dissolved solids from condenser leakage and other impurities.

10.4.6.1 Design Bases

Safety (10 CFR 50.2) Design Bases

The CPS does not perform, ensure or support any safety-related function, and thus, has no safety design bases.

Non-Safety Power Generation Design Bases

(1) The CPS continuously removes dissolved and suspended solids from the condensate to maintain reactor feedwater quality.

(2) The CPS removes corrosion products from the condensate and from drains returned to the condenser hotwell, to limit any accumulation of corrosion products in the cycle.

(3) The CPS removes impurities entering the power cycle due to condenser circulating water leaks as required to permit continued power operation within specified water quality limits as long as such condenser leaks are too small to be readily located and repaired.

(4) The CPS limits the entry of dissolved solids into the feedwater system in the event of large condenser leaks, such as a tube break, to permit a reasonable amount of time for orderly plant shutdown.

(5) The CPS maintains the condensate storage tank water quality as required for condensate makeup and miscellaneous condensate supply services.

(6) The CPS flow controllers and sequencers are at least dual redundant and the vessel flow signals and bypass arranged such that the condensate system flow is uninterrupted even in the presence of a single failure.

10.4.6.2 System Description

10.4.6.2.1 General Description

The Condensate Purification System (CPS) (shown in Figure 10.4-7) consists of high efficiency filters arranged in parallel and operated in conjunction with a normally closed filter bypass. The CPS also includes bead resin, mixed bed ion exchange demineralizer vessels arranged in parallel with, normally one in standby. The number of filters and demineralizers is indicated in Table 10.4-4. A resin trap is installed downstream of each demineralizer vessel to preclude gross resin leakage into the power cycle in case of vessel underdrain failure, and to catch resin fine leakage as much as possible. The CPS system achieves the water quality effluent conditions required for reactor power operation defined in the water quality specification. The CPS components are located in the Turbine Building.

Provisions are included to permit cleaning and replacement of the ion exchange resin. Each of the demineralizer vessels has fail-open inlet and outlet isolation valves which are remotely controlled from the local CPS control panel.

A demineralizer system bypass valve is also provided which is manually or automatically controlled from the main control room. Pressure downstream of the demineralizer or high demineralizer differential pressure is indicated and is alarmed in the main control room to alert the operator. The bypass is used only in emergency and for short periods of time until the CPS flow is returned to normal or the plant is brought to an orderly shutdown. To prevent unpolished condensate through the bypass, the bypass valve control scheme is redundant.

10.4.6.2.2 Component Description

Codes and standards applicable to the CPS are listed in Section 3.2. The system is designed and constructed in accordance with quality Group D requirements. Design data for major components of the CPS are listed in Table 10.4-4.

Condensate Filters - The CPS includes backwashable high efficiency filters.

Condensate Demineralizers - demineralizer vessels (one on standby) are constructed of carbon steel and lined with stainless steel.

10.4.6.2.3 System Operation

The CPS is continuously operated to maintain feedwater purity levels.

Full condensate flow is passed through the filters and demineralizers (one in standby), which are piped in parallel. The last demineralizer is on standby or is in the process of being cleaned, emptied or refilled. The service run of each demineralizer is terminated by: either high differential pressure across the vessel, high effluent conductivity, high sodium content, or high volumetric throughput. Alarms for each of these parameters are provided on the local control panel and the main control room.

The local control panel is equipped with the appropriate instruments and controls to allow the operators to perform the following operations:

(1) Remove a saturated filter from service, temporarily allowing some condensate filter bypass. Clean up the isolated filter by backwashing and place it back in operation;

(2) Remove an exhausted demineralizer from service and replace it with a standby unit;

(3) Transfer the resin inventory of the isolated demineralizer vessel into the resin receiver tank for mechanical cleaning or disposal.

(4) After cleaning, transfer the received resin bed from the receiver tank to the storage tank. Alternately, load the storage tank with fresh new resin.

(5) Transfer the resin storage tank resins to any isolated demineralizer vessel.

(6) Transfer exhausted resin from the receiver tank to the radwaste system.

On termination of a demineralizer service run, the exhausted vessel is taken out of service and isolated, and the standby unit is placed in service by remote manual operation from the local control panel. The resin from the exhausted vessel is transferred to the resin receiver tank and replaced by a clean resin bed that is transferred from the resin storage tank. A final rinse of the new bed is performed in the isolated vessel by condensate recycle before it is placed on standby or returned to service. The rinse is monitored by conductivity analyzers; and the process is terminated when the required minimum rinse has been completed and normal clean bed conductivity is obtained.

A filter with high differential pressure is removed from service and the filter system bypass valve is throttled open to maintain condensate flow. The filter is backwashed, and returned to service. The filter system bypass valve is then closed. It is possible to remove a filter or demineralizer on line from the main control room and to place a standby filter or demineralizer on line from the main control room.

To support automation the CPS is designed to either operated with a constant number of on line demineralizers and filters from 25 to 100% power or to automatically sequence the filters and demineralizers as necessary to support any power level between 25 – 100%.

Through normal condensate makeup and reject, the condensate storage tank water inventory is processed through the CPS, and tank water quality is maintained as required for condensate makeup to the cycle and miscellaneous condensate supply services.

The condensate purification and related support system wastes are processed by the radwaste system, as described in Chapter 11.

10.4.6.3 Evaluation

The CPS does not perform, ensure or support any safety-related function.

The CPS removes condensate system corrosion products, and impurities from condenser leakage in addition to some radioactive material, activated corrosion products and fission products that are carried-over from the reactor. While these radioactive sources do not affect the capacity of the resin, the concentration of such radioactive material requires shielding (Chapter 12). Wastes from the condensate purification system are collected in controlled areas and sent to the radwaste system for treatment and/or disposal. Chapter 11 describes the activity level and removal of radioactive material from the condensate system.

CPS complies with Regulatory Guide 1.56.

The CPS and related support facilities are located in nonsafety-related buildings. As a result, potential equipment or piping failures cannot affect plant safety.

10.4.6.4 Tests and Inspections

Preoperational tests are performed on the CPS to ensure operability, reliability, and integrity of the system. Each filter vessel, polisher vessel and system support equipment can be isolated during normal plant operation to permit testing and maintenance.

10.4.6.5 Instrumentation Applications

Conductivity elements are provided for the system influent and for each demineralizer vessel effluent and monitored in the main control room. System influent conductivity detects condenser leakage; whereas, demineralizer effluent conductivities provide indication of resin exhaustion. The demineralizer effluent conductivity elements also monitor the quality of the condensate that is recycled through a standby vessel before it is returned to service. Differential pressure is monitored across each filter vessel, demineralizer vessel and each vessel discharge resin strainer to detect blockage of flow. The flow through each demineralizer is monitored and used as control input to assure even distribution of condensate flow through all operating vessels and by correlation with the vessel pressure drop, to permit evaluation of the vessel throughput capacity. Individual demineralizer vessel effluent conductivity, differential pressure, and flow measurements are recorded at the system local control panel. Individual filter vessel pressure drop and flow data are provided at the system local control panel. A multipoint indicator is included in the local panel to alarm abnormal conditions within the system. The local panel is connected to the main control room where local alarms are indicated by a global system alarm but can also be displayed individually if requested by the operators.

The Turbine Building Sampling System monitors other water quality parameters as necessary for proper operation of the filters, demineralizers, and miscellaneous support services. Other system instrumentation includes programmable controllers for automatic supervision of the resin transfer

and cleaning cycles. The control system prevents the initiation of any operation or sequence of operations that would conflict with any operation or sequence already in progress whether such operation is under automatic or manual control.

10.4.7 Condensate and Feedwater System

The Condensate and Feedwater System (C&FS) receives condensate from the condenser hotwells, supplies condensate to the condensate purification system, and delivers high purity feedwater (FW) to the reactor, at the required flow rate, pressure and temperature.

10.4.7.1 Design Bases

Safety (10 CFR 50.2) Design Bases

The C&FS does not perform, ensure or support any safety-related function, and thus, has no safety design basis.

Non-Safety Power Generation Design Bases

(1) The C&FS is designed to provide a continuous and dependable feedwater (FW) supply to the reactor at the required flow rate, pressure, and temperature under all anticipated steady-state and transient conditions.

(2) The C&FS is designed to supply up to 135% of the rated FW flow demand during steady-state power operation and other plant operation modes.

(3) The C&FS is designed to permit continuous long-term full power plant operation with the following equipment out of service: one FW pump, one condensate pump, or one high-pressure heater string with a slightly reduced final FW temperature.

(4) The C&FS is designed to permit continuous long-term operation with one LP heater string out of service at the maximum load permitted by the turbine manufacturer (approximately 85%). This value is set by steam flow limitation on the affected LP turbine.

(5) The C&FS is designed to heat up the reactor FW to at least 215.6ºC (420ºF) during full power operation and to lower temperatures during part load operation.

(6) The C&FS is designed so that no single operator error or equipment failure shall cause more than 55.6ºC (100ºF) decrease in temperature.

(7) The C&FS, in conjunction with the Condensate Purification System, is designed to maintain water quality suitable for all plant conditions, including power operation, startup, shutdown and extended outages. The Condensate Purification System is discussed in Subsection 10.4.6.

(8) The C&FS is designed to allow for final feedwater temperature reduction (FFWTR) operation.

(9) During plant startups the C&FS is designed to pump preheated FW from the feedwater tank to the RPV for the purpose of RPV initial heating if sufficient core decay heat is not available.

(10) All C&FS functions needed to support power operation use at least dual redundant controllers and triply redundant signals; a single control system failure does not cause an inadvertent pump trip or valve operation.

10.4.7.2 Description

10.4.7.2.1 General Description

The C&FS (Table 10.4-5 and Figure 10.4-2) consists of the piping, valves, pumps, heat exchangers, controls and instrumentation, and the associated equipment and subsystems that supply the reactor with heated FW in a closed steam cycle utilizing regenerative FW heating. The system described in this subsection extends from the main condenser outlet to (but not including) the seismic interface restraint outside of containment. The remainder of the system, extending from the restraint to the reactor, is described in Chapter 5. Turbine cycle steam is utilized for a total of seven stages of FW heating, six stages of closed FW heaters and one direct-contact FW heaters (feedwater tank). The drains from each stage of the closed low-pressure FW heaters are cascaded through successively lower pressure FW heaters to the main condenser. The high-pressure heater drains are routed to the feedwater tank. The cycle extraction steam, drains and vents systems are illustrated in Figures 10.4-8 and 10.4-9.

The C&FS consists of four 33-37% capacity condensate pumps (three normally operating and one on automatic standby), four 33-45% capacity reactor FW pumps (three normally in operation and one on automatic standby), four stages of low-pressure closed FW heaters, a direct contact FW heater (feedwater tank) and two stages of high-pressure FW heaters, piping, valves, and instrumentation. The condensate pumps take suction from the condenser hotwell and discharge the deaerated condensate into one common header, which feeds the Condensate Purification System (CPS). Downstream of the CPS, the condensate is taken by a single header, through the auxiliary condenser/coolers, (one gland steam exhauster condenser and two sets of SJAE condensers and offgas recombiner condenser (coolers). The condensate then branches into three parallel strings of low-pressure FW heaters. Each string contains four stages of low-pressure FW heaters. The strings join together at a common header which is routed to the feedwater tank, which shall supply heated feedwater to the suction of the reactor FW pumps.

Another input to the feedwater tank consists of the drains, which originate from the crossaround steam moisture separators and reheaters and from the two sets of high-pressure FW heaters .

The reactor FW pumps discharge the FW into two parallel high-pressure FW heater strings, each with two stages of high-pressure FW heaters. Downstream of the high-pressure FW heaters, the two strings are then joined into a common header, which divides into two FW lines that connect to the reactor.

A bypass is provided around the FW tank and reactor FW pumps to permit supplying FW to the reactor during early startup without operating the FW pumps, using only the condensate pumps. During startups, a low flow control valve with flow supplied by either the condensate pumps or via preselected (two out of four) FW pumps operating at their minimum fixed speed control the RPV level.

One more bypass, equipped with a flow control valve, is provided around the high-pressure heaters for isolating them during power operation for heater maintenance or for reducing final FW temperature to extend the end of fuel cycle.

During power operation, the condensate is well deaerated in the condenser and continuous oxygen injection is used to maintain the level of oxygen content in the final FW as shown on Figure 10.4-2.

To minimize corrosion product input to the reactor during startup, recirculation lines to the condenser are provided from the high-pressure FW heater outlet header.

Prior to plant startup, cleanup is accomplished by allowing the system to recirculate through the condensate polishers for treatment prior to feeding any water to the reactor during startup.

10.4.7.2.2 Component Description

All components of the condensate and FW system that contain the system pressure are designed and constructed in accordance with applicable codes as referenced in Section 3.2.

Condensate Pumps - The four condensate pumps are identical, fixed speed motor-driven pumps, three are normally operated, and the fourth is on automatic standby. Valving is provided to allow individual pumps to be removed from service.

A minimum flow recirculation line is provided downstream of the auxiliary condensers for condensate pump protection and for auxiliary condenser minimum flow requirements.

Low-pressure Feedwater Heaters - Three parallel and independent strings of four closed FW heaters are provided. The heaters have integral drain coolers, and their drains are cascaded to the next lower stage heaters of the same string except for the lowest pressure heater. Heater drains from the lowest pressure FW heater flows to the external drain cooler. The drain from the external drain cooler is routed to the main condenser. The heater shells are either carbon steel or low alloy ferritic steel, and the tubes are stainless steel. Each low-pressure FW heater string has an upstream and downstream isolation valve which closes on detection of high level in any one of the low-pressure heaters in the string.

High-pressure Feedwater Heaters - Two parallel and independent strings of two high-pressure FW heaters are located in the high-pressure end of the Turbine Building. The high-pressure heaters have integral drain coolers. The No. 7 heater drains to the No. 6 heater of the same string that drains to the feedwater tank. The heater shells are carbon steel, and the tubes are stainless steel.

Heater string isolation and bypass valves are provided to allow each string of high-pressure heaters to be removed from service, thus slightly reducing final FW temperature but requiring no reduction in plant power. The heater string isolation and bypass valves are actuated on detection of high level in either of the two high-pressure heaters in the string.

The startup and operating vents from the steam side of the FW heaters are piped to the main condenser. Discharge from the shell relief valves on the steam side of the FW heaters is piped to the main condenser.

Each heater shell is provided with an alternate drain line to the main condenser for automatic dumping upon detection of high level. The alternate drain line is also used during startup and shutdown when it is desirable to dump the drains for FW quality purposes.

MSR Drain Tanks – A drain tank is provided on each moisture separator and each reheater drain circuit. Moisture separator drain tank level is maintained by the control valve in the drain pump

discharge and recirculation lines. Reheater drain tank level is maintained by the control valve on the drain tank discharge line.

The drain tanks are provided with an alternate drain line to the main condenser for automatic dumping upon detection of high level. The alternate drain line is also used during startup and shutdown when it is desirable to dump the drains for FW quality purposes.

Direct contact FW heater – Low pressure heater stage No. 5 is combined with a large horizontal storage tank (feedwater tank). The direct contact FW heater receives the condensate from the outlet of the low-pressure close contact heatup strings. Heating steam flows to the direct contact FW heater to raise the temperature of the condensate to saturation level. Non-condensables are vented through an orifice and valve assembly to the main condenser.

Auxiliary steam from the auxiliary boilers is supplied to the direct contact FW heater above and during the RPV heating up process.

The shell of the direct contact FW heater and feedwater tank is made in carbon steel.

A high level dump line provides overflow protection to the feedwater tank. During high level conditions, water from the feedwater tank is drained to the main condenser. After a turbine trip or full load rejection, the main steam is supplied to the direct contact FW heater to maintain NPSH for feedwater booster pumps.

Reactor Feedwater Pumps - Four identical and independent 33–45% capacity reactor FW pumps are provided. Each reactor FW pump consists of main feedwater pump and its booster pump. The feedwater booster pumps take suction from the direct contact feedwater tank and provide flow to the main feedwater pumps. The main feedwater pump provides flow to the high-pressure FW heaters. Each reactor FW pump is driven by an adjustable speed electrical motor.

Three of the four reactor FW pumps operate normally in parallel while the other remains on standby. If one of the pumps in operation trips, the pump on standby starts up automatically.

Isolation valves are provided which allow each reactor feed pump to be individually removed from service for maintenance, while the plant continues operation at or near full power with the three remaining pumps.

Controlled FW recirculation is provided from the discharge side of each reactor feed pump to the direct contact feedwater heater. This provision ensures that the minimum safe flow through each reactor feed pump is maintained during operation.

10.4.7.2.3 System Operation

Normal Operation—Under normal operating conditions, system operation is automatic. Automatic and redundant level control systems control the levels in all FW heaters, Moisture Separator Reheater (MSR) drain tanks, direct contact feedwater heater and the condenser hotwells. Feedwater heater levels are controlled by modulating drain valves. Control valves at the discharge of the gland steam condenser and after the condensate system minimum flow control valve control the level in the feedwater tank. Valves in the makeup line to the condenser from the condensate storage tank and in the return line to the condensate storage tank control the level in the condenser hotwells.

During power operation, FW flow is automatically controlled by the reactor FW pump speed that is set by the feed pump speed control system. The control system utilizes measurements of steam flow, FW flow, and reactor level to regulate the FW pump speed. During startup, FW flow is automatically regulated by the low flow control valve.

Ten-percent step load and 5%/min ramp changes can be accommodated without a major effect on the C&FS. In conjunction with the Turbine Bypass System, the system is capable of accepting a full generator load rejection without reactor trip and without the operation of safety/relief valves.

10.4.7.3 Evaluation

The C&FS does not serve or support any safety function. Systems analyses show that failure of this system cannot compromise any safety-related system/function or prevent safe shutdown. C&FS component failure analysis results are provided in Table 10.4-6.

During operation, radioactive steam and condensate are present in the FW heating portion of the system, which includes the extraction steam piping, FW heater shells, heater drain piping, and heater vent piping. Shielding and access control are provided as necessary (Chapter 12). The C&FS is designed to minimize leakage with welded construction utilized where practicable. Relief discharges and operating vents are channeled through closed systems.

If it is necessary to remove a component from service such as a FW heater, pump, or control valve, continued operation of the system is possible by use of the multistring arrangement and the provisions for isolating and bypassing equipment and sections of the system.

The majority of the condensate and FW piping considered in this section is located within the nonsafety-related Turbine Building. The portion that connects to the seismic interface restraint outside the containment is located in the steam tunnel between the Turbine and Reactor Buildings. This portion of the piping is analyzed for dynamic effects from postulated seismic events. The FW control system is designed to ensure that there could not be large sudden changes in FW flow that could induce water hammer.

The C&FS trip logic and control schemes respectively use coincident logic and redundant controllers and input signals to assure that plant availability goals are achieved and spurious trips are avoided. This specifically includes all FW heater level controllers, all C&FS flow and minimum flow controllers, and pump suction pressure trips, FW heater string isolation/high level trips and C&FS bypass system(s) operation.

10.4.7.4 Tests and Inspections

10.4.1.1.1 Preservice Testing

Each FW heater and condensate pump receives a shop hydrostatic test, which is performed in accordance with applicable codes. All tube joints of FW heaters are shop leak tested. Prior to initial operation, the completed C&FS receives a field hydrostatic and performance test and inspection in accordance with the applicable code. Periodic tests and inspections of the system are performed in conjunction with scheduled maintenance outages.

10.4.1.1.2 Inservice Inspections

The performance status, leak-tightness, and structural leak-tight integrity of all system components are demonstrated by continuous operation.

10.4.7.5 Instrumentation Applications

Feedwater flow-control instrumentation measures the FW discharge and minimum flow rates from each reactor feed pump and the low flow control valve. These FW system flow measurements are used by the Feedwater Control System (Section 7.7) to regulate the FW flow to the reactor to meet system demands.

Pump flow is measured on the pump discharge line and the pump minimum flow line, and flow controls provide automatic pump recirculation flow for each reactor FW pump. Automatic and redundant controls also regulate the condensate flow through the auxiliary condensers (offgas recombiner condenser/coolers, gland steam condenser, and SJAE condensers) and maintain condensate pump minimum flow. Measurements of pump suction and discharge pressures are provided for all pumps in the system. Reactor FW pump suction pressure, discharge pressure and flow are indicated in the main control room.

Both the high-pressure and low-pressure FW heater string isolation valves, their extraction non-return valves and the heater string bypass valve are interlocked.

Sampling means are provided for monitoring the quality of the condensate and final FW, as described in Subsection 9.3.2. Temperature measurements are provided for each stage of FW heating. Steam pressure measurements are provided at each FW heater. Redundant level instrumentation and controls are provided for automatically regulating the heater drain flow rate to maintain the proper level in each FW heater shell. High-level control valves provide automatic dump-to-condenser of heater drains on detection of high level in the heater shell.

The total water volume in the C&FS is maintained through automatic makeup and rejection of condensate to the condensate storage tank. The system makeup and rejection are controlled by the redundant condenser hotwell level controllers.

10.4.8 Steam Generator Blowdown System (PWR)

Not applicable to the ESBWR.

10.4.9 Auxiliary Feedwater System (PWR)

Not applicable to the ESBWR.

10.4.10 COL Information

10.4.10.1 Radiological Analysis of the TGSS Effluents

The COL applicant shall perform a radiological analysis of the TGSS effluents based on conservative site-specific parameters. From this analysis, the applicant shall determine the various actions to be taken if and when the TGSS effluent radiation monitor detects preset levels of effluent contaminations, including the level at which the main steam is not used to supply seal steam to the TGSS (Subsection 10.4.3.5.1).

10.4.10.2 Turbine Bypass Valve Configuration

Other possible design and configurations of the TBV could be proposed in the COL phase.

10.4.10.3 Applicability of Regulatory Guide 1.33

The applicability of Regulatory Guide 1.33 will be analyzed in the COL phase (See Subsection 10.4.2.2).

10.4.10.4 Circulating Water Flow

A permanent flow meter installation shall be analyzed in the COL phase (See Subsection 10.4.5.5).

Table 10.4-1

Main Condenser Data

*

Parameter	Value
Condenser Type	Transversal, 3 shells, multipressure Reheating/Deaerating
Design duty, kW-total 3 shells	2941
Shell pressures 30°C Circ. water, MPaA (psia)	0.0065 (0.94), 0.0087 (1.26), 0.012 (1.73)
Circulating water flow rate, m^3/hr (ft^3/hr)	152,000 ($5.38 \cdot 10^6$)
Tubeside temperature rise-total 3 shells, °C (°F)	16.5 (29.7)
Shell design pressure range, MPaA (psia)	0 to 0.35(0 to 50.76)
Hotwell storage capacity-total 3 shells, m^3 (ft^3)	316 ($11.2 \cdot 10^3$)
Channel design pressure range, MPaA (psia)	0 to 0.38 (0 to 55.1)
Surface Area, cm^2 (in^2)	$1.5 \cdot 10^{10}$ ($2.32 \cdot 10^9$)
Number of tube passes per shell	1
Applicable codes and standards	ASME Sect. VIII, Div. I, ANSI Standards, HEI Standards for Steam Surface Condensers
Alarms and Trips:	
High condenser pressure turbine alarm, MPaA (psia).	COL applicant to supply
High condenser pressure turbine trip, MPaA (psia).	COL applicant to supply
Bypass valve closure, MPaA (psia).	COL applicant to supply
Main steam isolation valve closure, MPaA (psia).	COL applicant to supply
High condenser pressure reactor trip, MPaA (psia)	COL applicant to supply

* Condenser surface and performance parameters are site dependent. Values quoted above are for reference purposes only.

Table 10.4-2

Condenser Air Removal System

Parameter	Value
Steam Jet Air Ejector System:	
Number of ejector stages	2
Number of intercondensers	2
Number of ejector sets and capacity	2 x 100%
Required supply steam pressure, MPaA (psia)	0.827 (120)
Normal steam supply source	Cross-around
Start-up Vacuum Pump System:	
Number of pumps and capacity	2 x 50%

Table 10.4-3

Circulating Water System

Parameter	Value
Circulating Water Pumps:	
Number of pumps	4*
Pump type	Vertical, wet pit
Unit flow capacity, m^3/hr (gpm)	Approx. 38300 (170000)*
Driver Type	Electric motor
Other System Components:	
Pump discharge valve & actuator	Butterfly, fast actuated
Condenser isolation valve & actuator	Butterfly, motor
Number of water box drain pump	1
Operating Temperatures:	
Normal Power Heat Sink temperature range for water entering the CIRC, ºC (ºF)	0** to 37.8 (32 to 100)
Temperature range of water delivered to the main condenser, ºC (ºF)	5** to 37.8 (41 to 100)

* Number of pumps and pump flow are site dependent. Values quoted above are for reference purposes only.

** If the Normal Power Heat Sink does not have the capability to control the minimum temperature, the minimum temperature would be maintained by warm water recirculation

Table 10.4-4

Condensate Purification System

Parameter	Value
Condensate Filters:	
Filter type	High efficiency (hollow fiber or equivalent)
Number of vessels *	6
Total design flow rate, m^3/hr (gpm) *	6480 (28530)
Condensate Polishers:	
Polisher type	Mixed bed ion exchanger
Number of vessels *	8
Total design flow rate, m^3/hr (gpm) *	6480 (28530)
Specific flow rate, ℓ/s/m^2 (gal/s/ft^2)	< 27.2 (<0.67)
Other System Features:	
Filter backwash tank	1
Resin receiver tank	1
Resin storage tank	2

* The number of condensate filters, demineralizers, design flow and specific design flow rate are site dependent, values quoted above are for reference purposes only.

Table 10.4-5

Condensate and Feedwater System Data

Parameter	Value
Condensate Piping:	
Normal flow rate*, kg/hr (lbm/hr)	6.59×10^6 (14.5×10^6)
Number of lines	1
Nominal pipe size*(mm/inch)	1000/40
Fluid velocity*, m/s (ft/s	2.56 (8.4)
Fluid temperature*, °C (°F)	148(298)
Design code	ASME B31.1
Seismic design	Non Seismic
Main Feedwater Piping *:	
Design (VWO) flow rate, kg/hr (lbm/hr)	9.17×10^6 (20.21×10^6)
Number of lines	2
Nominal pipe size (mm/inch)	650/26
Fluid velocity, m/s (ft/s)	4.1(13.4)
Fluid temperature, °C (°F)	218.1(424.6)
Design code	ASME B31.1
Seismic design	Non Seismic

*Based on VWO FW flow.

Table 10.4-6
Condensate and Feedwater System Component Failure Analysis

Component	Failure Effect on Train	Failure Effect on System	Failure Effect on RCS
Condensate pump	None. Condenser hotwells and condensate pumps are interconnected.	None. Operation continues at full capacity, by automatic start up of the standby pump. The feedwater tank absorbs the flow transient.	None
No.1, 2, 3 or 4 FW heater	One train of No. 1, 2, 3 and 4 heaters is shut down. Remaining trains continue to operate.	Operation continues at reduced capacity, using parallel FW heaters. Load must not exceed turbine vendor's requirements to protect the LP turbines from excessive steam flow.	Reactor control system reduces reactor power to a level compatible to the safe LP turbine operation.
MSR drain tanks	Drains from affected drain subsystem are dumped to condenser.	100% of the corresponding drains are dumped to condenser.	None. The drain systems are designed to permit operation with normal full reactor power, FW temperature, and flow rate
Reactor FW pump	None. Feedwater pumps are interconnected.	None. Operations may continue at full capacity by automatic start up of the standby pump	None.
FW direct contact heater No.5	Direct contact heater overflow caused by condensate control valve failure.	None. There is an evacuation line to Main Condenser.	None
No. 6 or 7 FW heater.	One train is shut down.	C&FS operation continues at capacity, using parallel train and bypass line.	Reactor control system adjusts the reactor to permit continued operation with the reduced FW temperature.

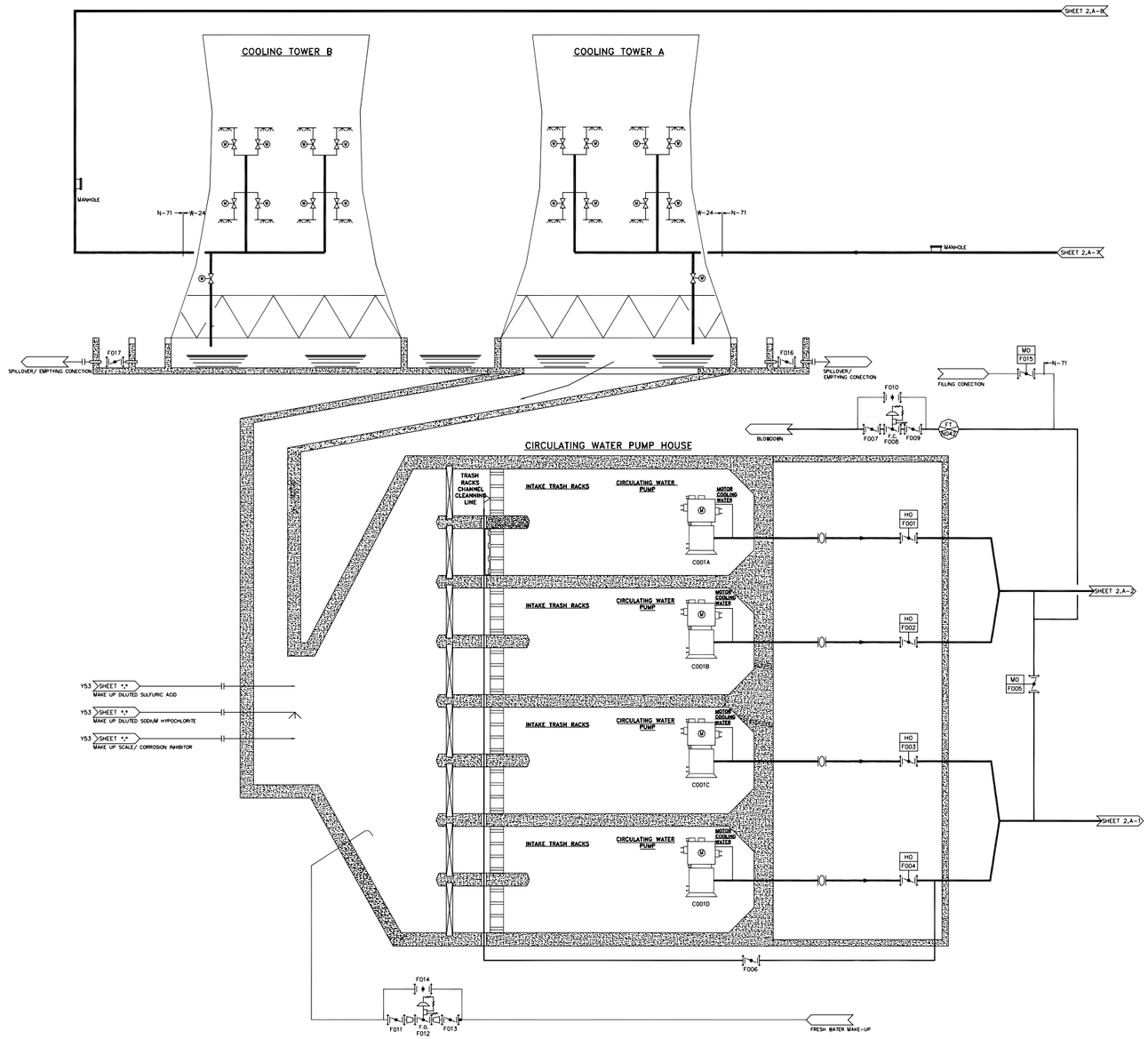

Figure 10.4-1. Circulating Water System
Sh 1 of 2

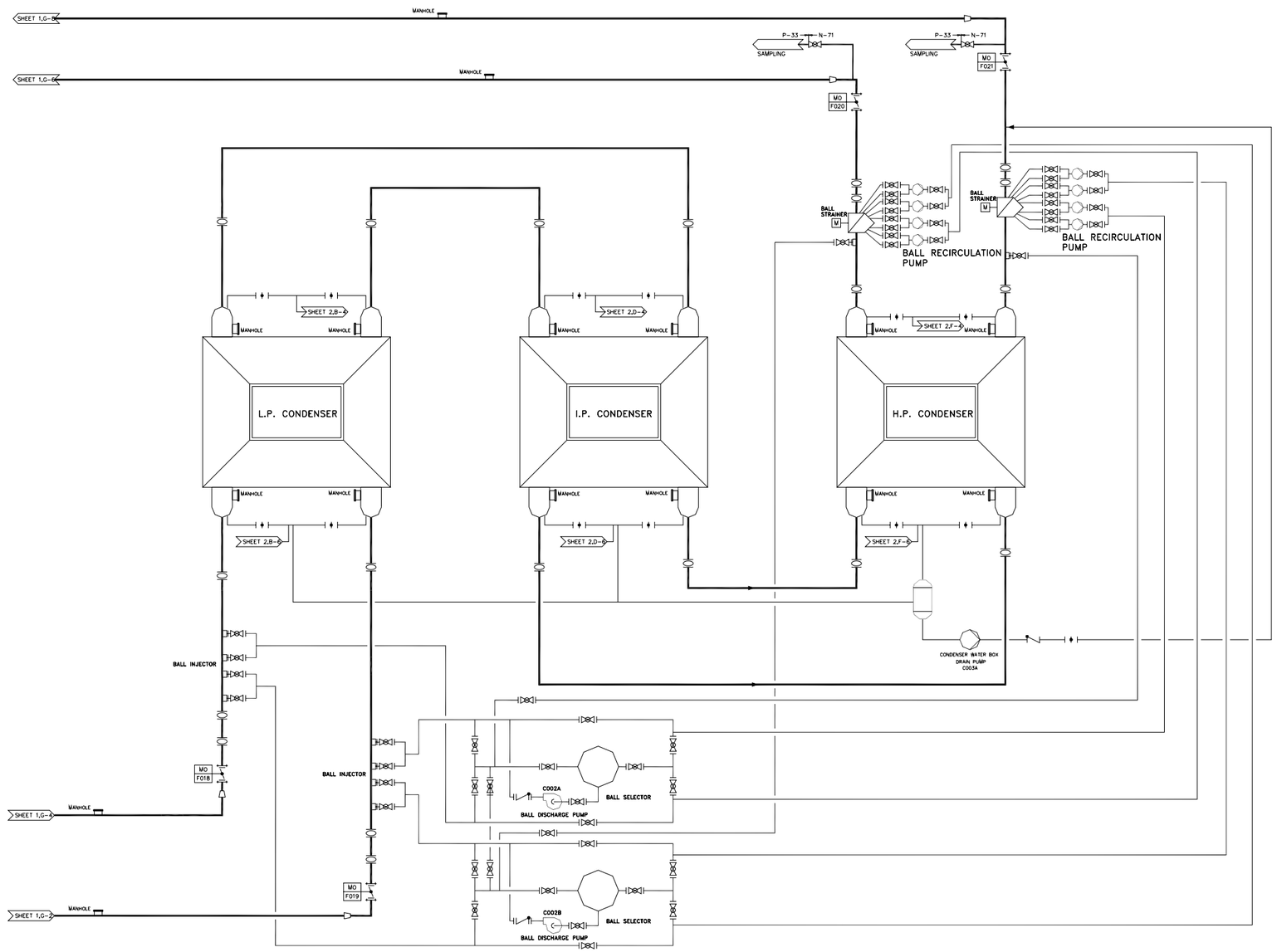

Figure 10.4-1. Circulating Water System
Sh 2 of 2

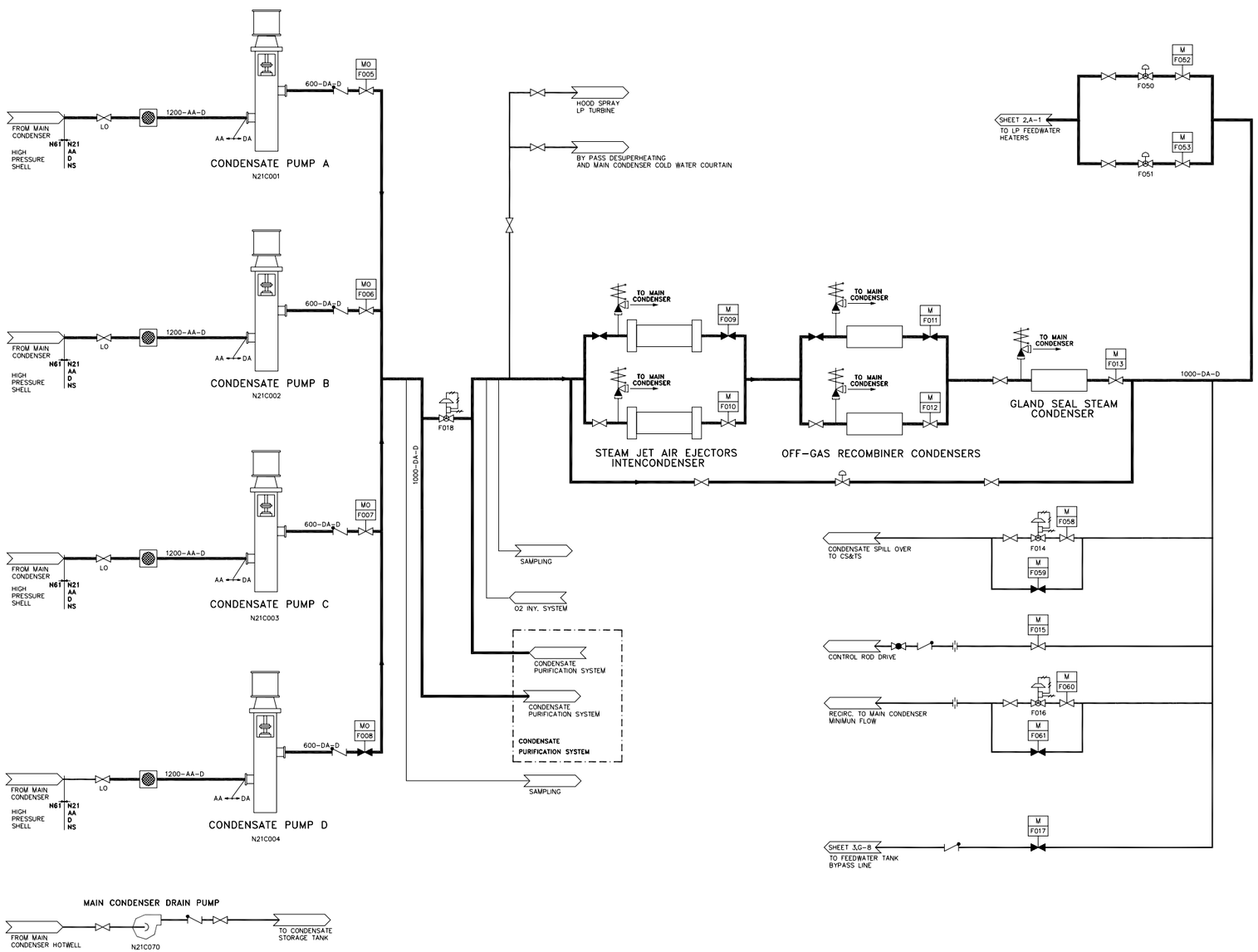

Figure 10.4-2. Condensate and Feedwater System
Sh 1 of 4

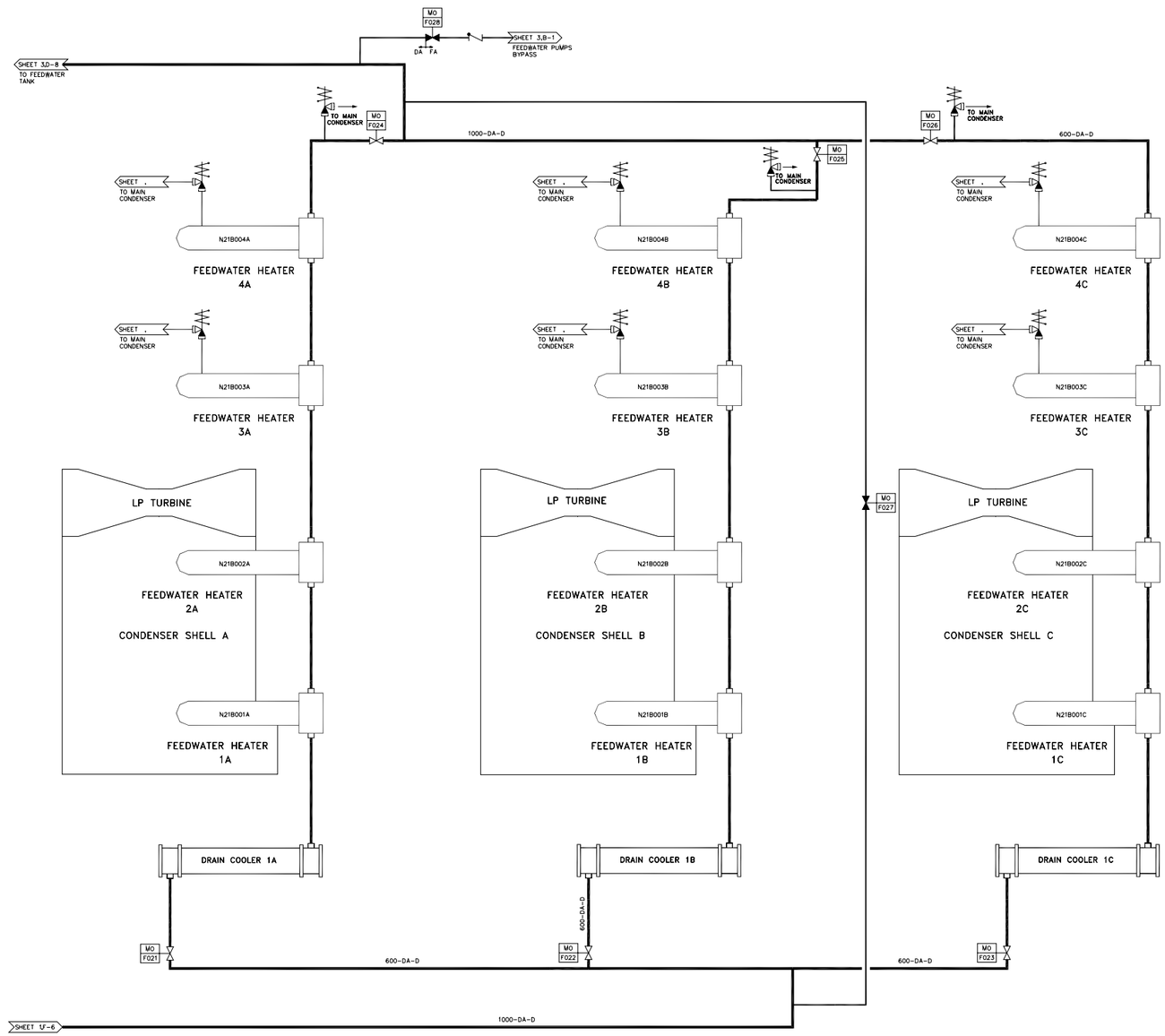

Figure 10.4-2. Condensate and Feedwater System
Sh 2 of 4

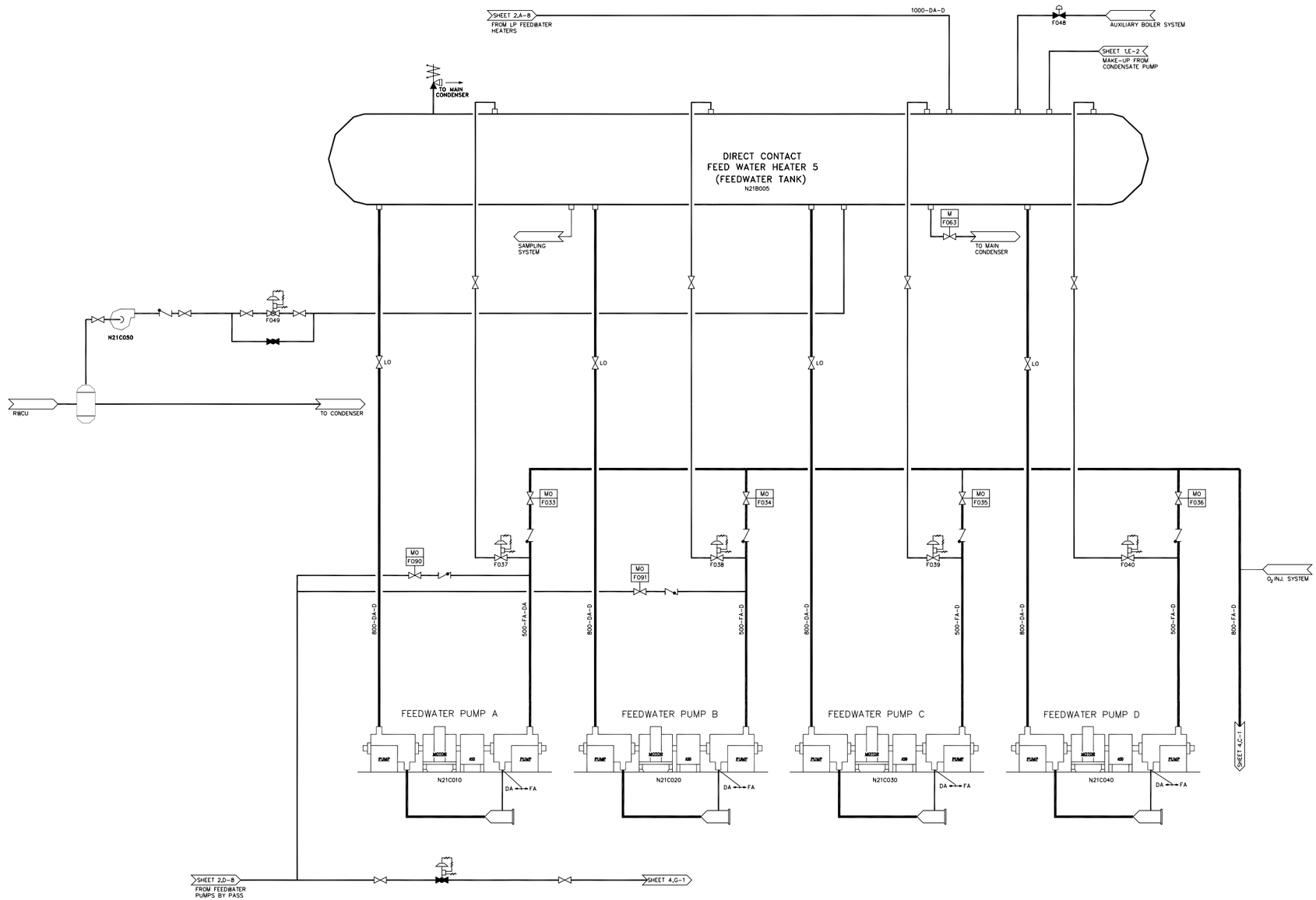

Figure 10.4-2. Condensate and Feedwater System
Sh 3 of 4

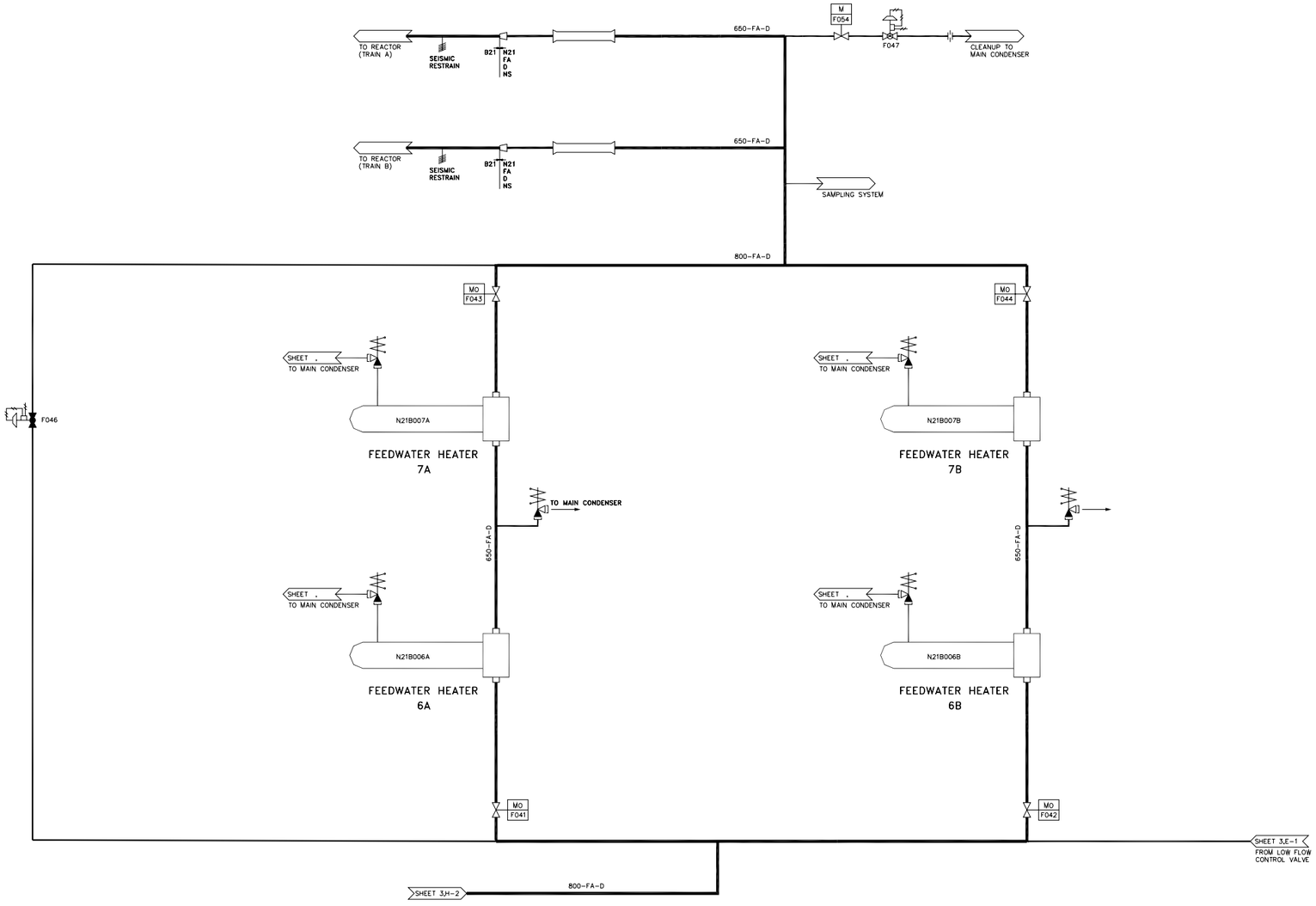

Figure 10.4-2. Condensate and Feedwater System
Sh 4 of 4

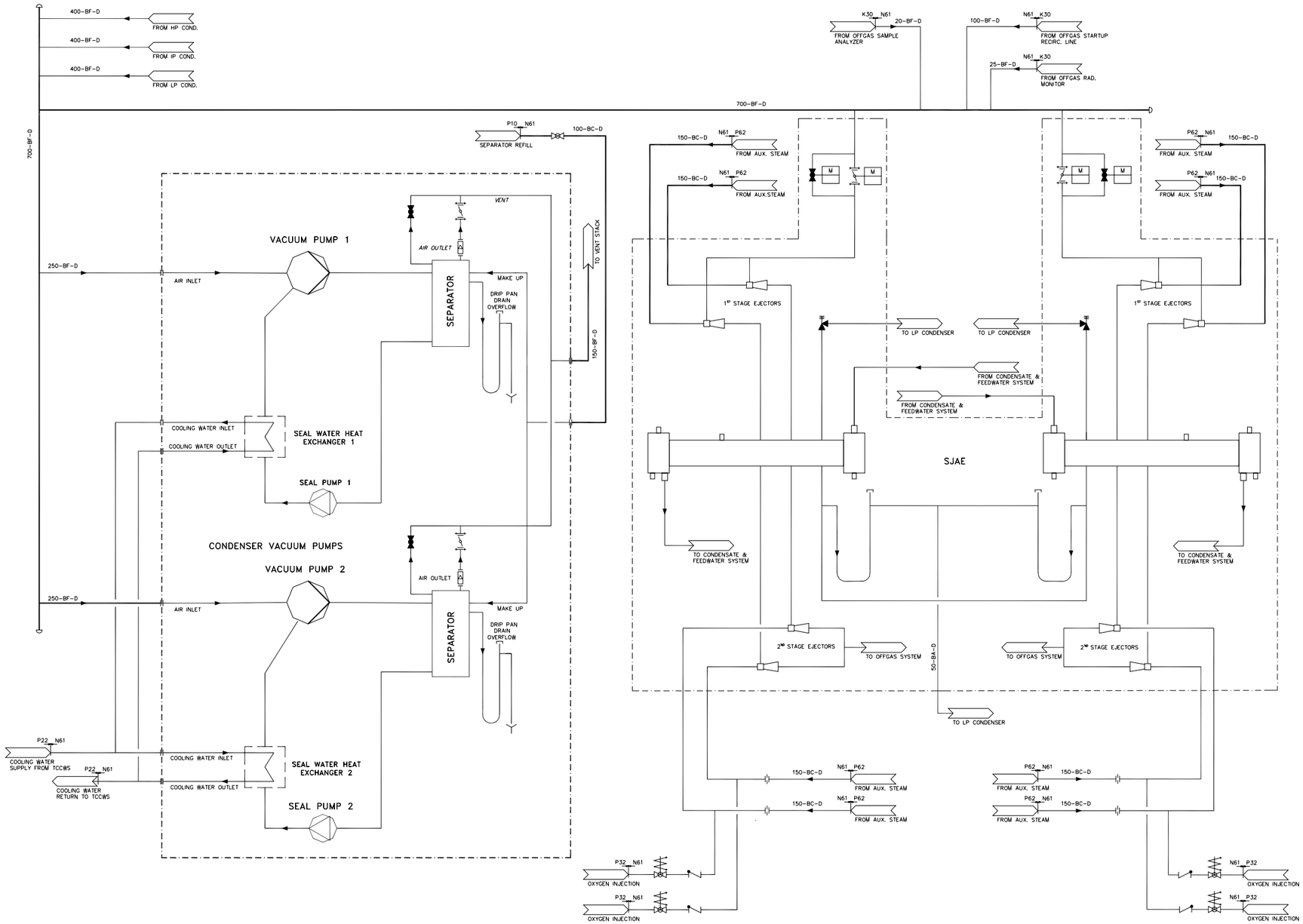

Figure 10.4-3. Condenser Air Removal system

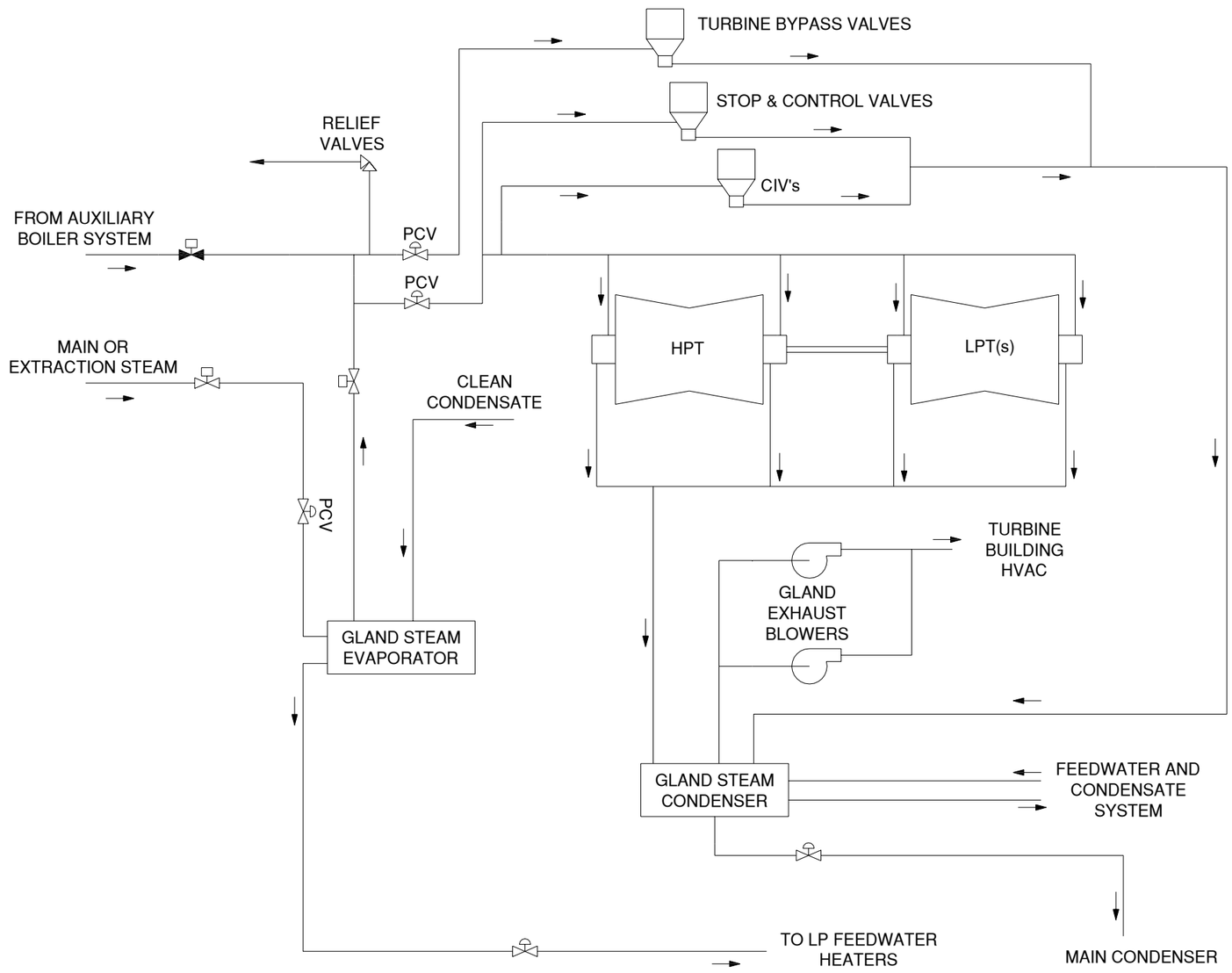

Figure 10.4-4. Turbine Gland Seal System

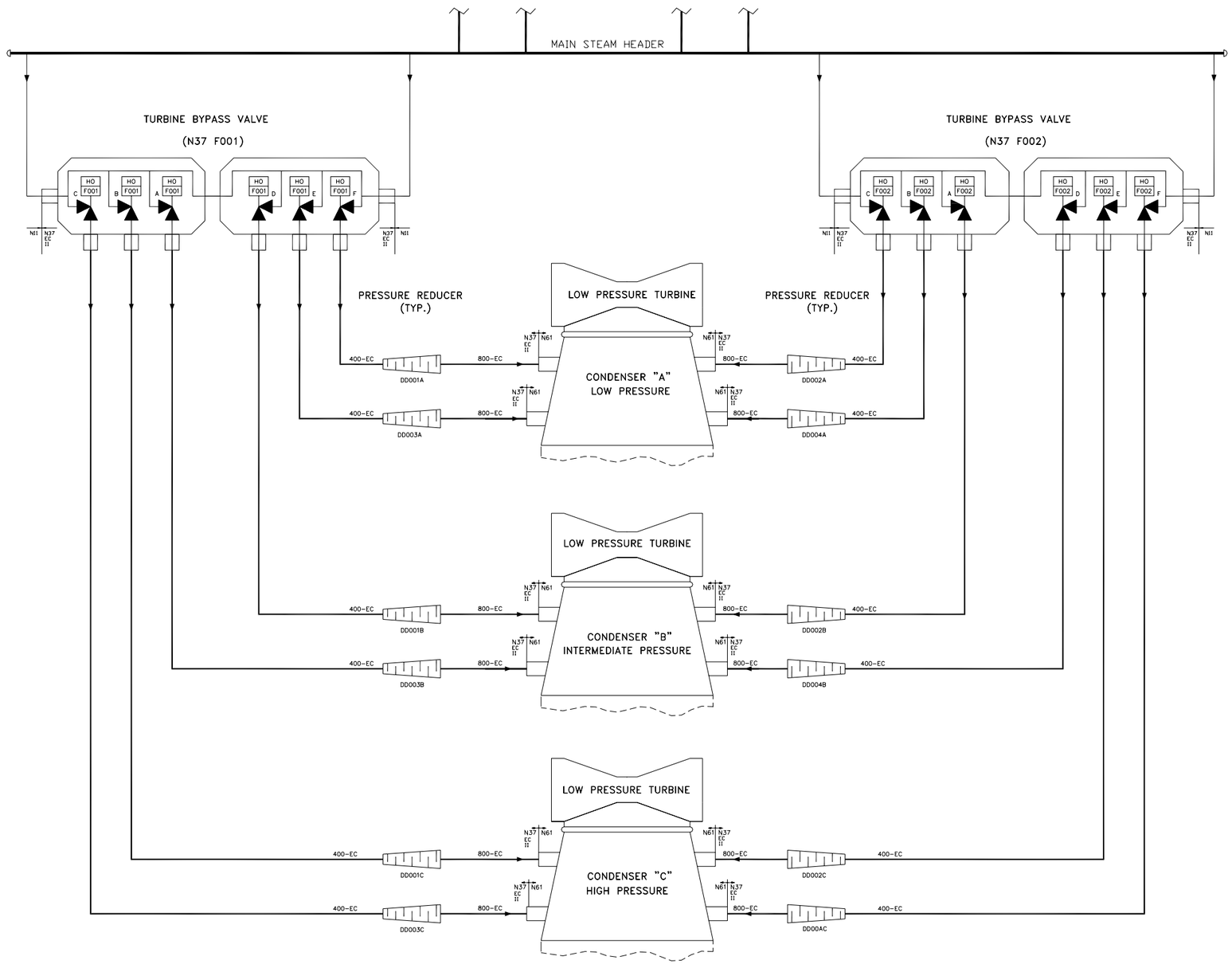

Figure 10.4-5. Turbine Bypass System

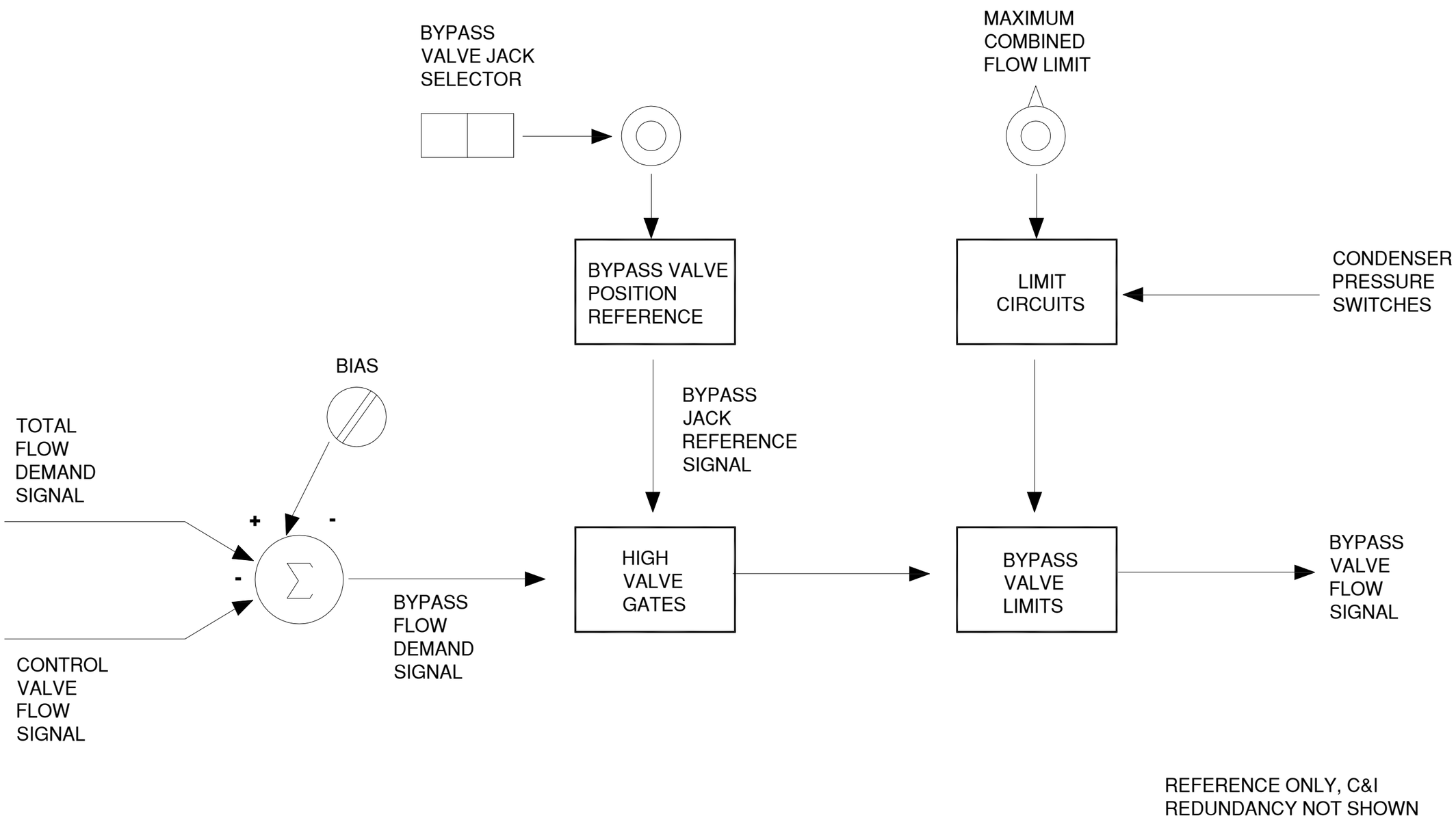

Figure 10.4-6. Signal Flow Chart for Turbine Bypass Control Unit

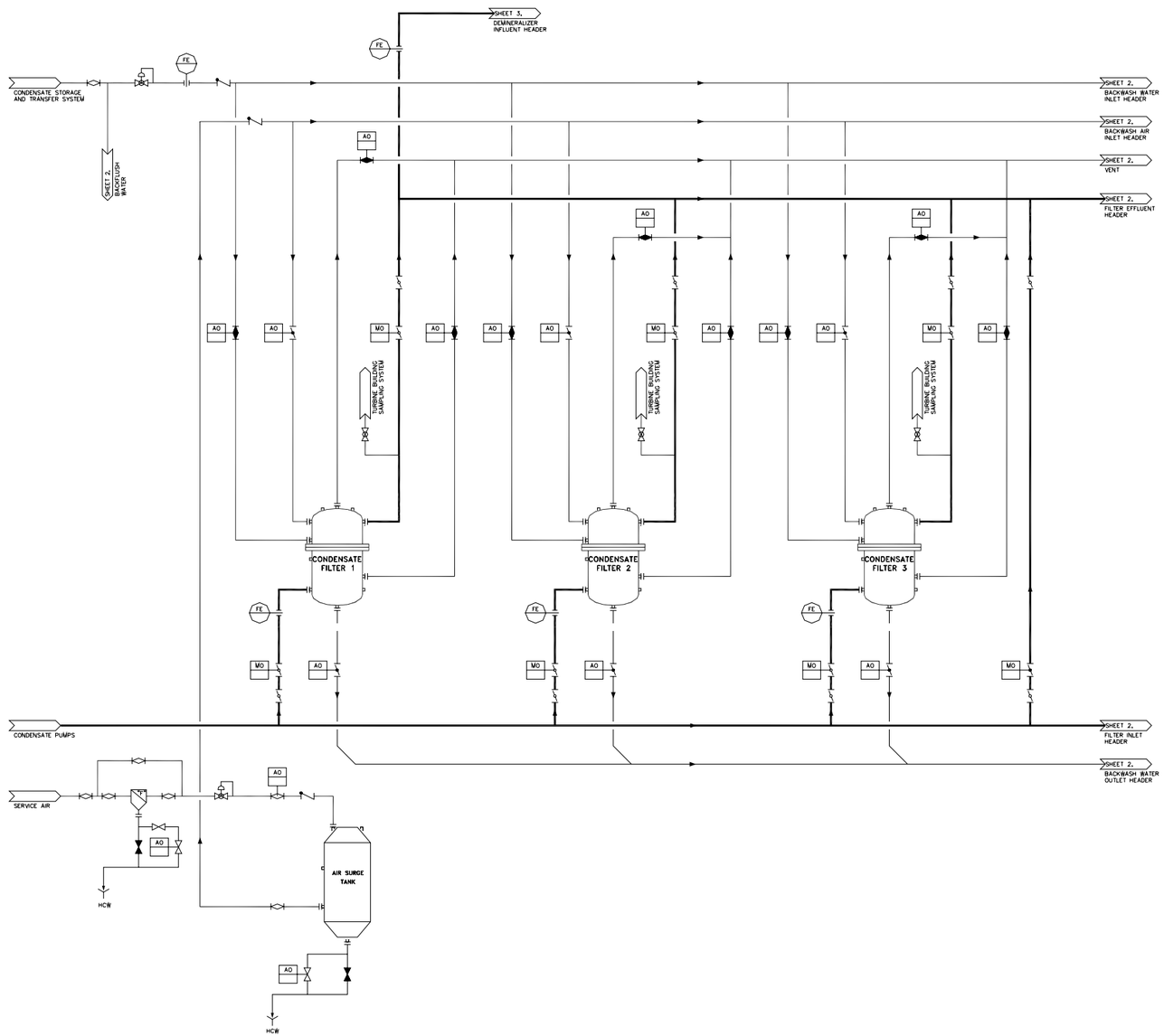

Figure 10.4-7. Condensate Purification System
Sh 1 of 5

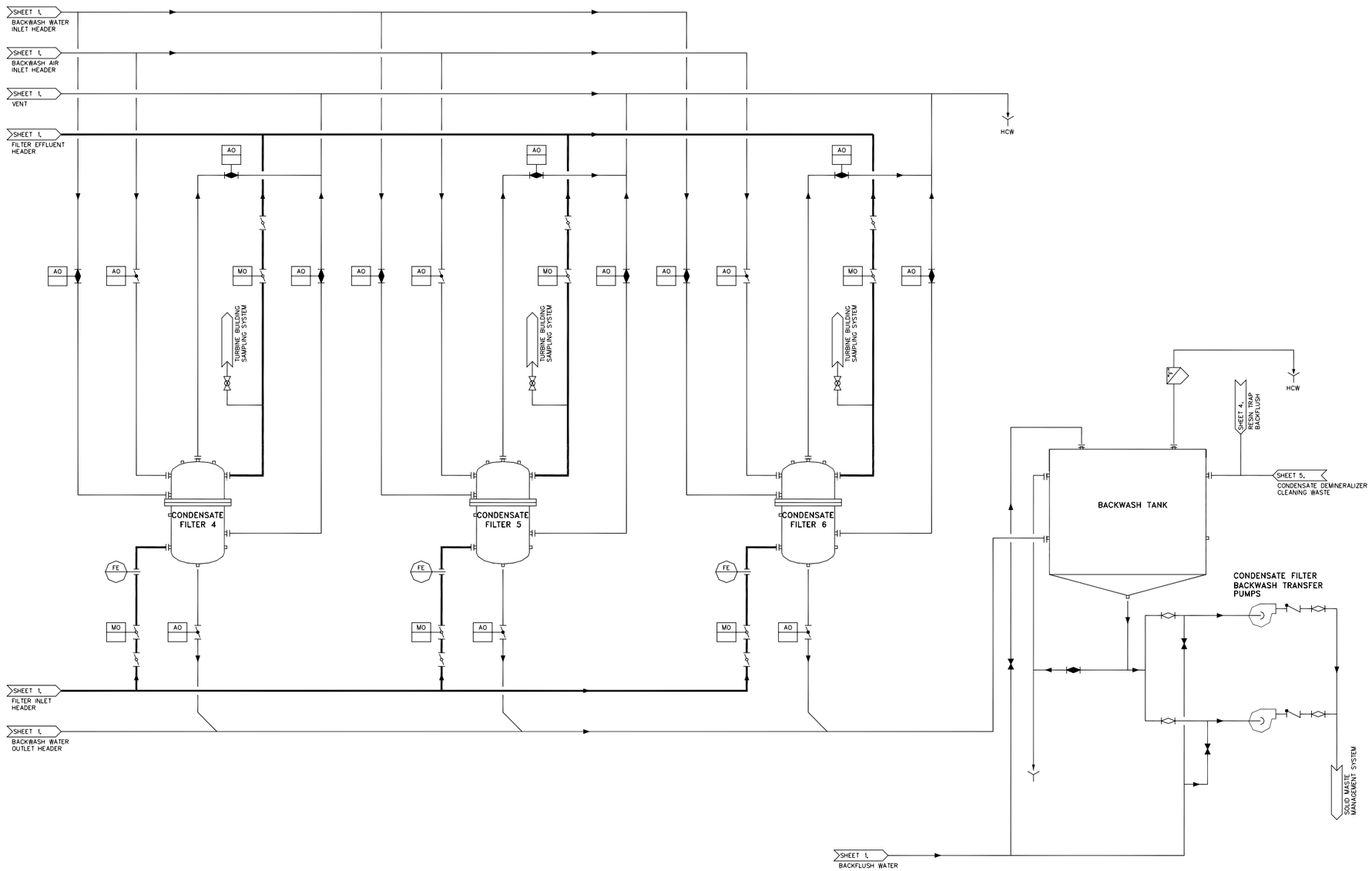

Figure 10.4-7. Condensate Purification System
Sh 2 of 5

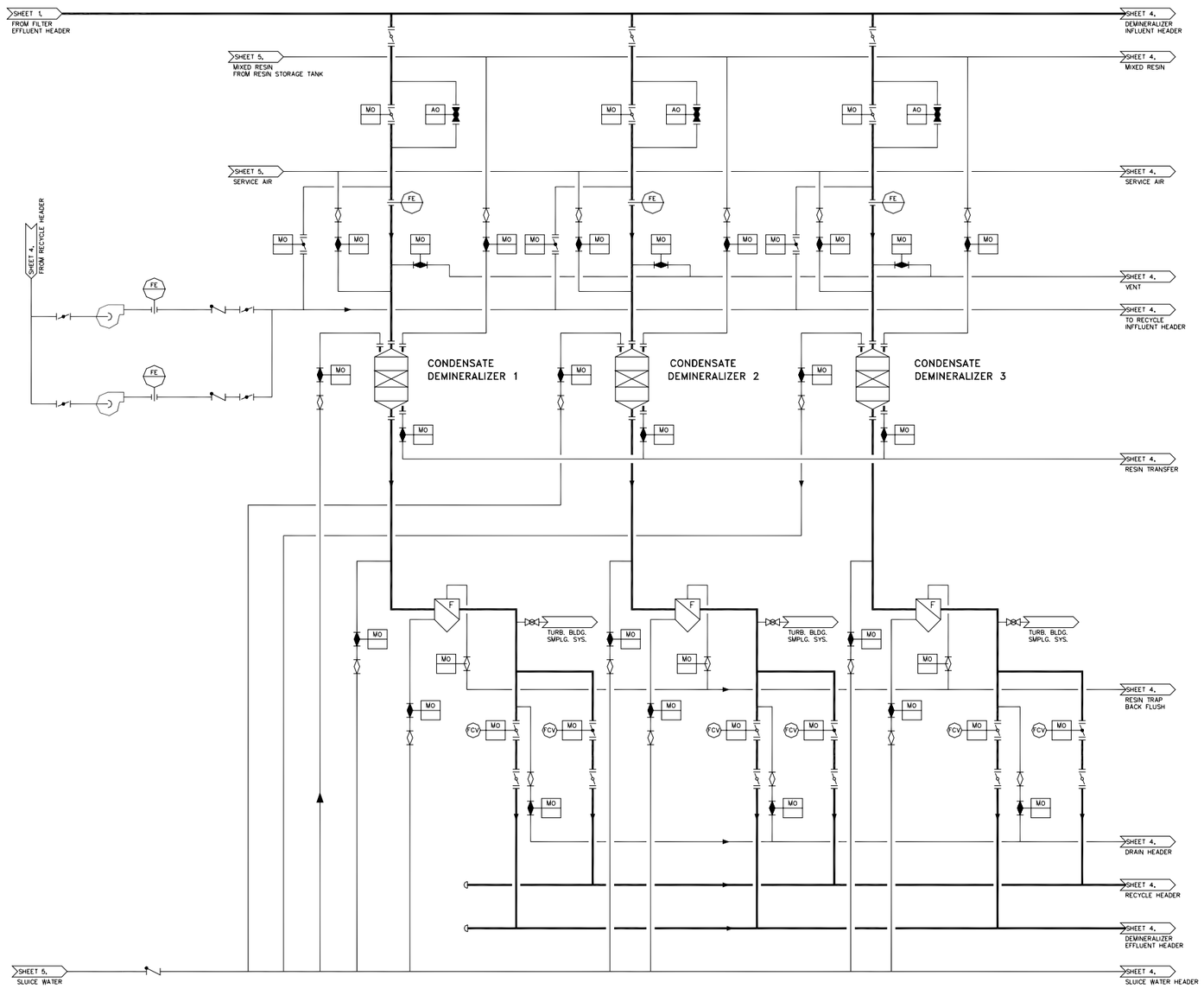

Figure 10.4-7. Condensate Purification System
Sh 3 of 5

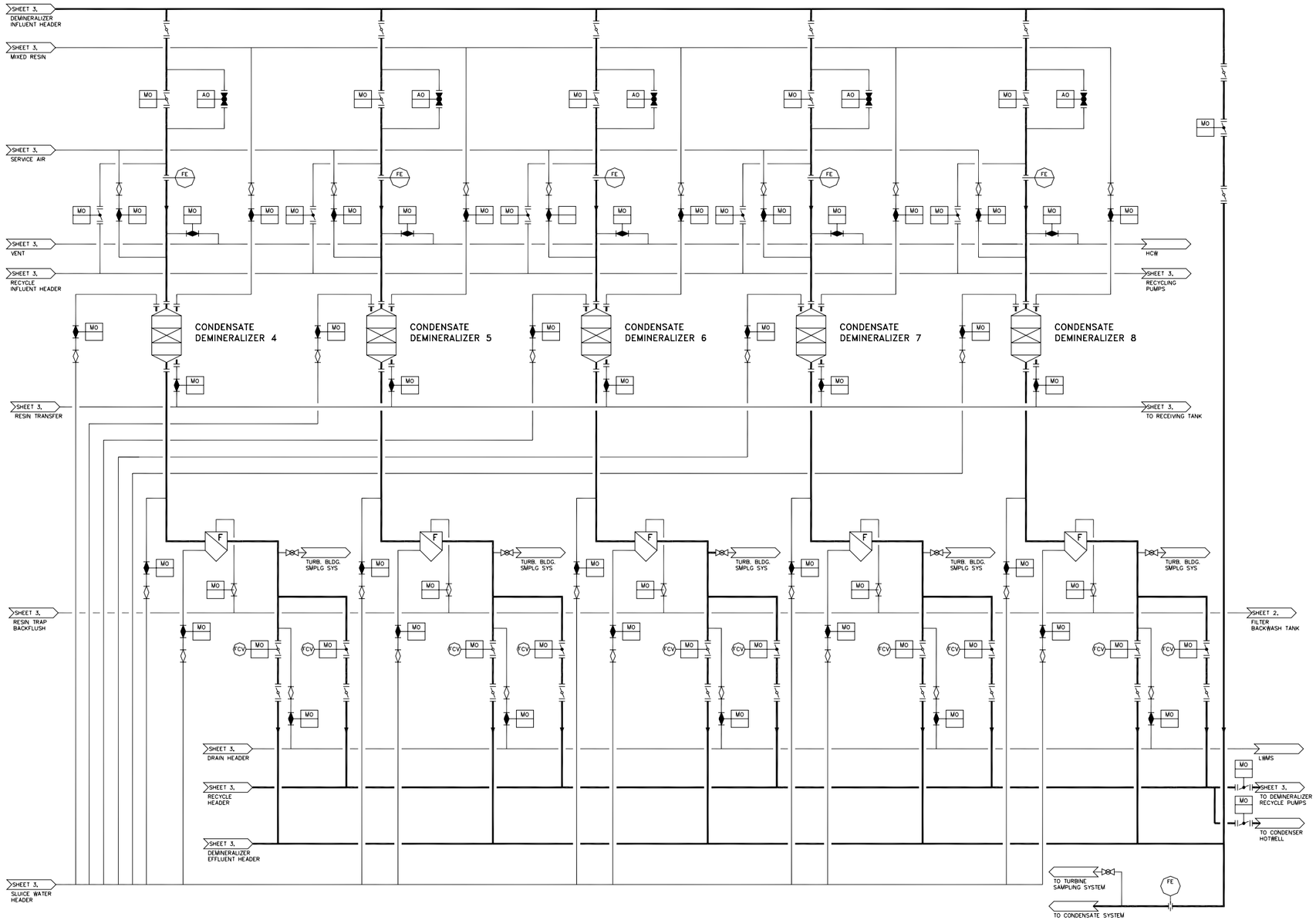

Figure 10.4-7. Condensate Purification System
Sh 4 of 5

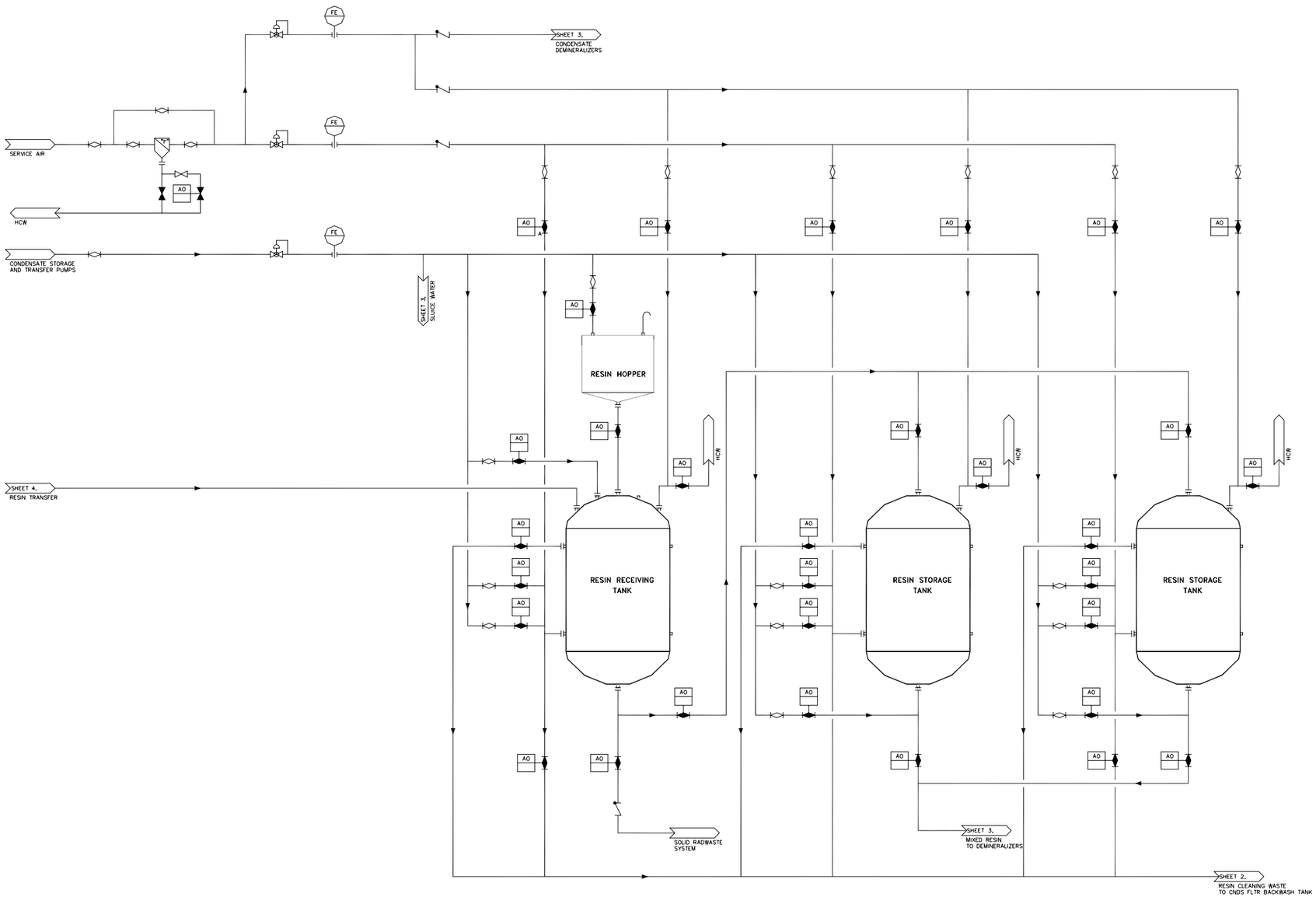

Figure 10.4-7. Condensate Purification System
Sh 5 of 5

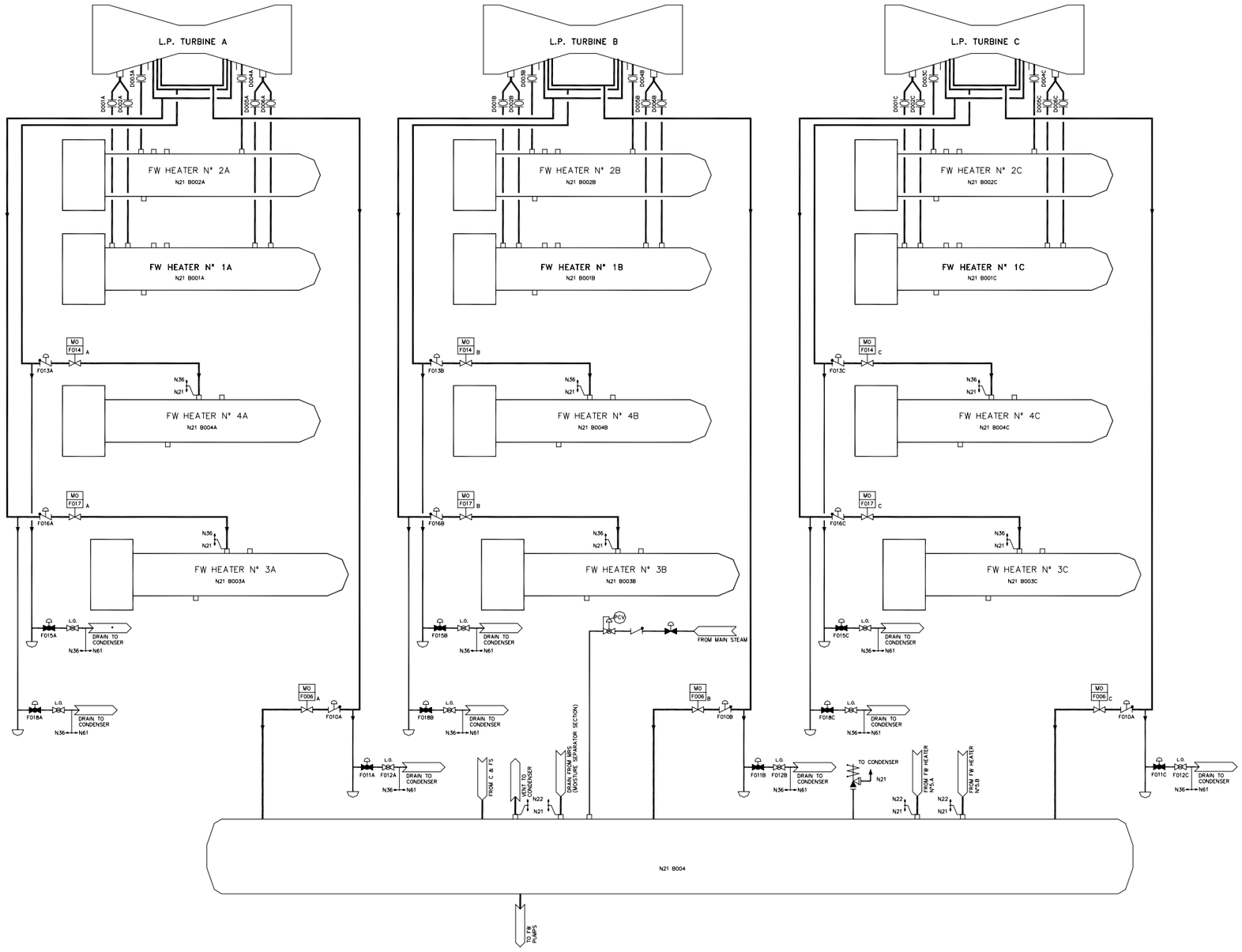

Figure 10.4-8. LP Extraction Steam Drains and Vent Systems
Sh 1 of 2

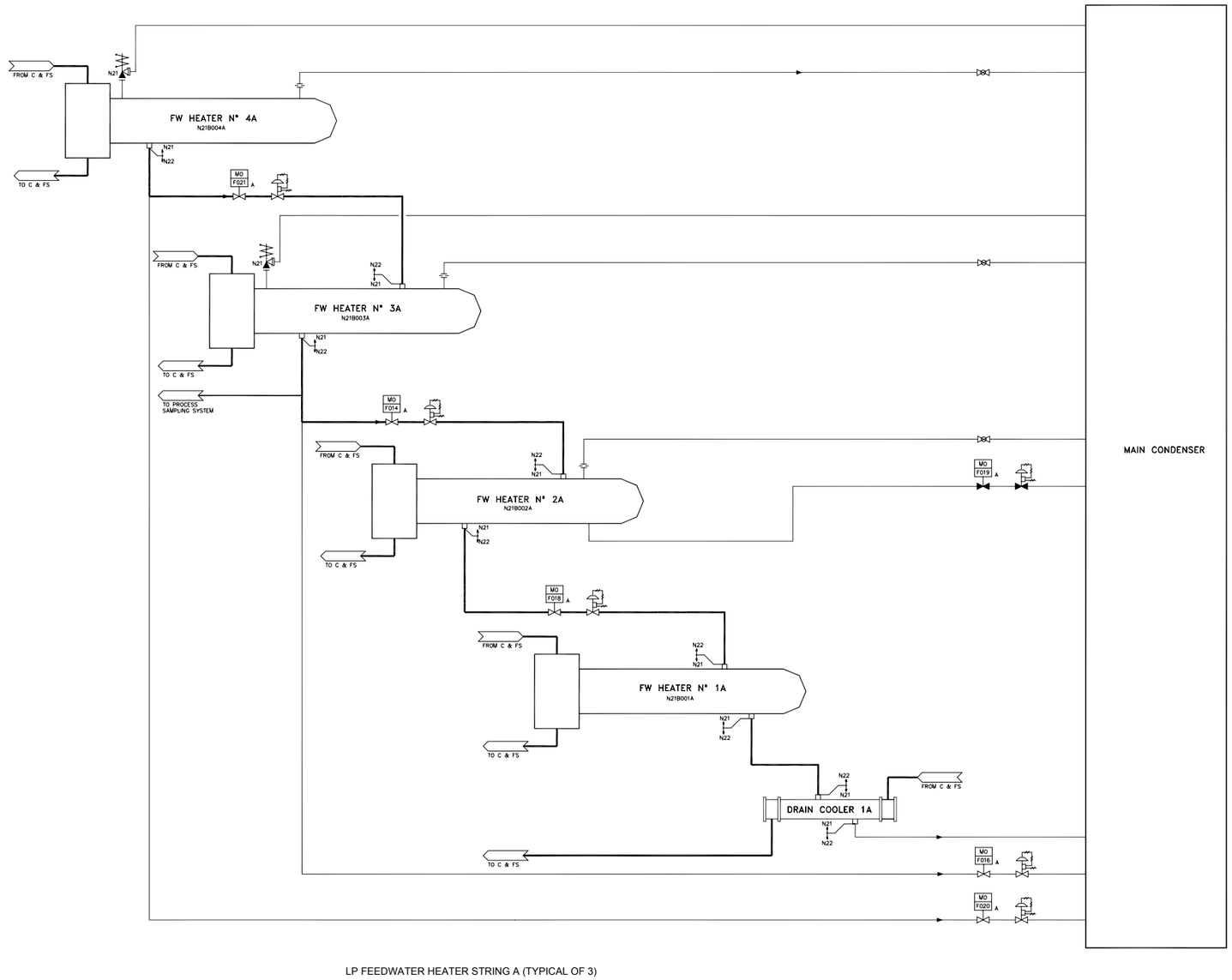

Figure 10.4-8. LP Extraction Steam Drains and Vent Systems

Sh 2 of 2

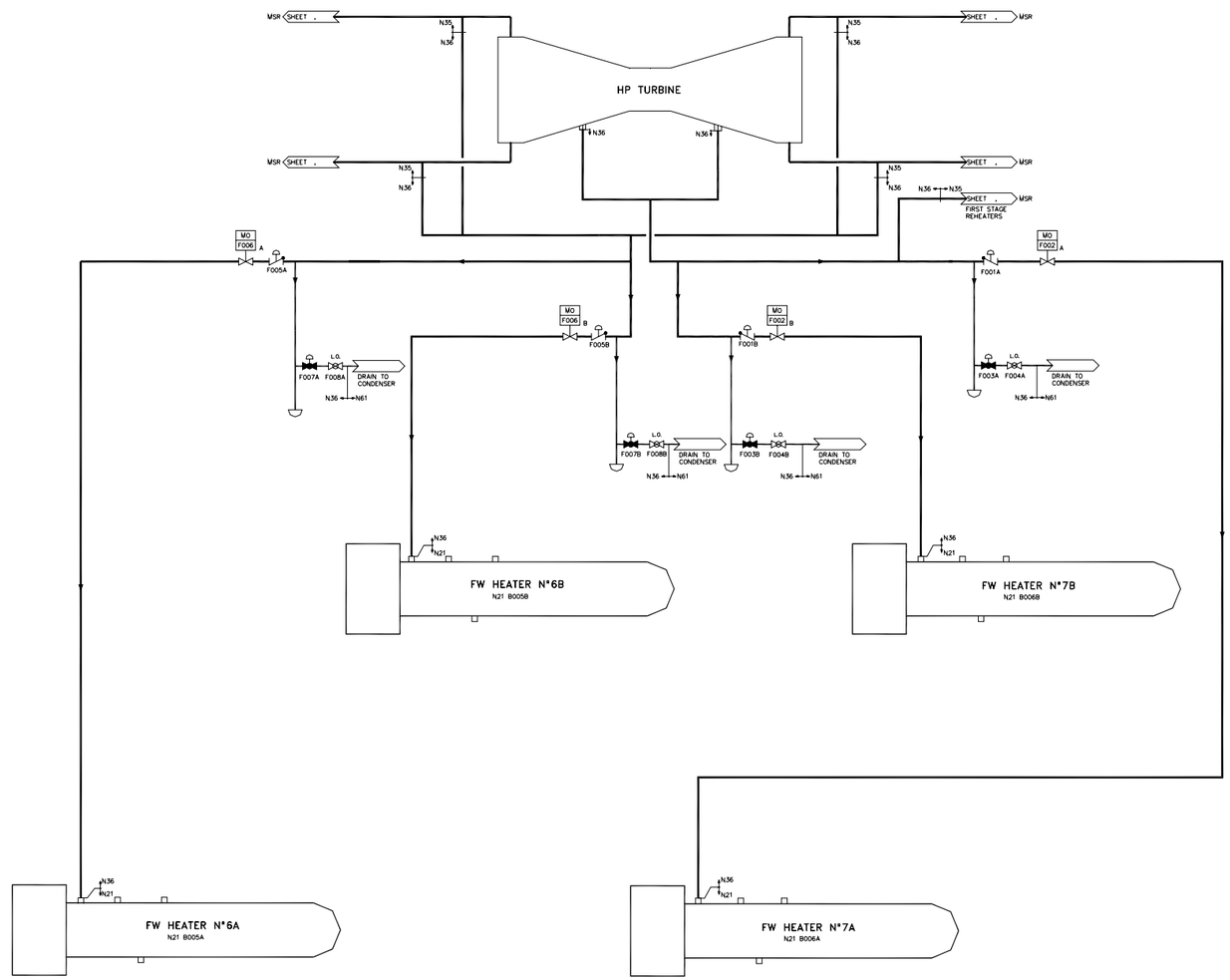

Figure 10.4-9. HP Extraction Steam Drains and Vent Systems
Sh 1 of 2

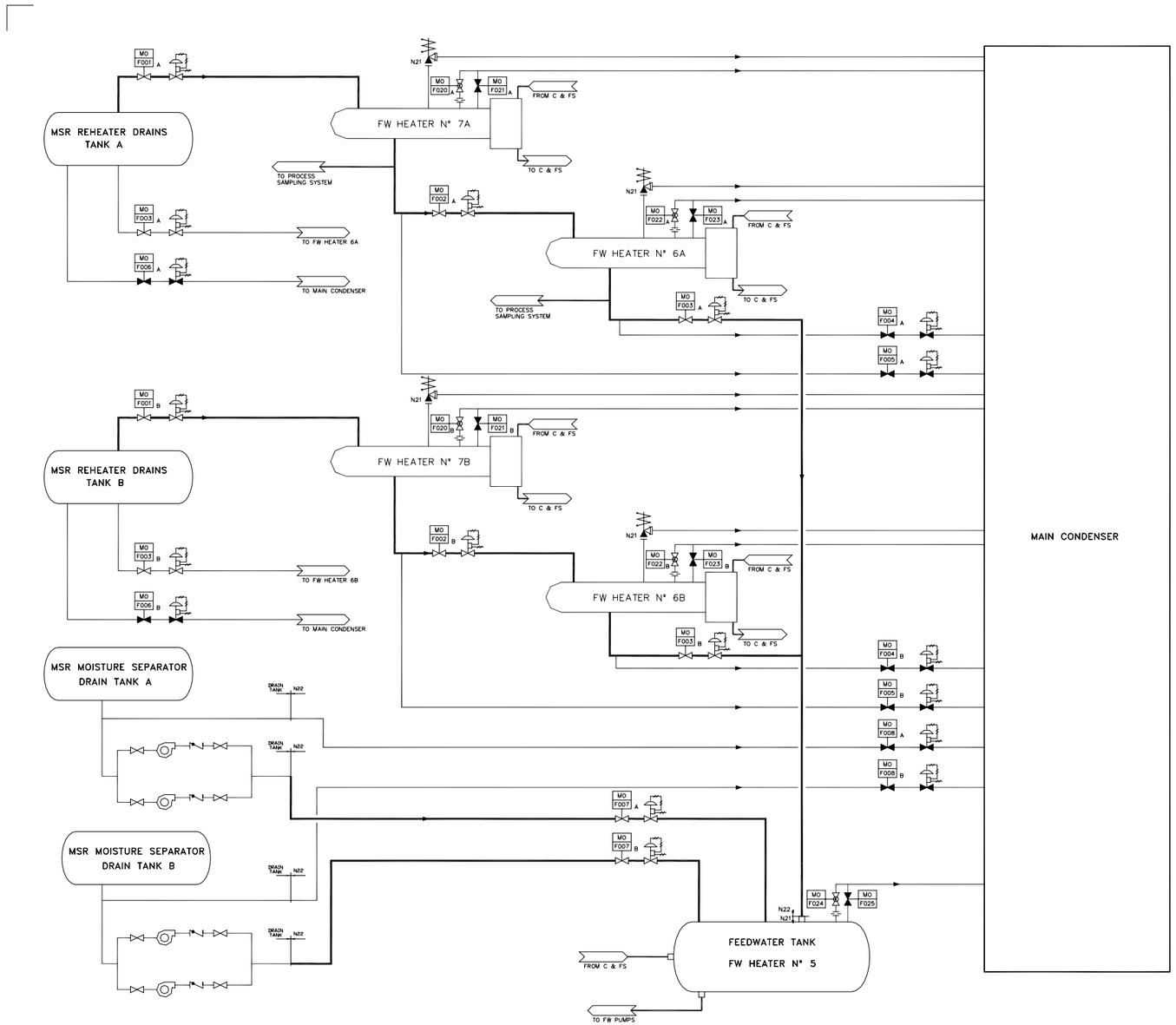

Figure 10.4-9. HP Extraction Steam Drains and Vent Systems
Sh 2 of 2

10A. ALTERNATIVE DESIGN FOR STEAM AND POWER CONVERSION SYSTEM

10A.1 ABSTRACT

Chapter 10 describes the ESBWR Steam and Power Conversion System Reference Design; this notwithstanding, alternative designs may have to be considered depending on site specific data and eventual Utility requirements.

Although the site environmental temperatures and the normal power heat sink used (the sea, a lake or cooling towers) have a significant impact on the plant's performance and plot plan, other power cycle characteristics such as final feedwater temperature, low-pressure turbine last stage size and even the designs of the turbine and other power cycle main equipment determine the plant electrical power and equipment arrangement in the Turbine Building.

A Steam and Power Conversion System Alternative Design is described in this Appendix 10A, as an example of possible significant changes in major systems configuration. In it, the most important aspects of the Steam and Power Conversion System Design have been modified as follows:

- The power cycle heat sink is a lake instead of the natural draft cooling towers foreseen in the Reference Design. This signifies the following changes with respect to the Reference Design:
  - The Circulating Water System is open circuit instead of closed circuit.
  - The Main Condenser is single pressure instead of multi-pressure, and therefore all of the low-pressure turbines have the same exhaust pressure.
  - The Main Condenser pressure is lower than in the reference design.
- The final feedwater temperature is 220ºC (428ºF), instead of the 215.6ºC (420ºF) contemplated in the Reference Design.
- The LP turbine last stage blade is 57" instead of the 52" of the Reference Design.
- The designs of the turbine, condenser and some feedwater heaters are different than what is considered in the Reference Design.

There is no difference between the power cycle Reference and Alternative design from a nuclear safety point of view and both comply with the reactor interface requirements; therefore, they have no effect on the Nuclear Island.

To facilitate understanding of the Steam and Power Conversion System Alternative Design, only the paragraphs with relevant differences, with respect to the Reference Design, are included in this Appendix 10A. Section 10 text references to Tables and Figures have a corresponding Table and Figure in Section 10A. Similar Section 10A text differences also may reference Tables and Figures in Section 10A.

Turbine Building general arrangement drawings for the cycle Alternative Design aforementioned are included on Section 10A.5.

SUMMARY DESCRIPTION

Same as the Reference Design except in the following paragraphs:

5th paragraph

The steam and power conversion system important design features are summarized in Table 10.1-1. The main conceptual features are illustrated on Figure 10A.1-1, assuming a single pressure condenser, using a once-through, fresh water cooling system. This type of condenser and other site dependent ESBWR plant features and parameters are given here to more completely define the ESBWR Turbine Island direct-cooling standard design and to be used as references in reviewing future ESBWR plant-specific licensing submittals, and confirming that such submittals are indeed consistent with the standard design. Nothing in the ESBWR Standard Plant design is meant to preclude the use of a closed cooling system and a triple pressure condenser nor do such changes affect the Nuclear Island.

8th paragraph

Table 10-1 show the as-designed steam and power conversion system heat input available from the Nuclear Steam Supply System (NSSS) when the reactor core is generating its rated output. The steam and power conversion system is designed to operate at 103% of rated turbine throttle flow (assumed to correspond to turbine valves wide open).

10th paragraph

The necessary biological shielding for personnel protection is provided for all radiation producing components of the steam and power conversion system including the main turbines, high velocity separators, feedwater deaerator storage tank and feed heaters, condenser and steam jet air ejector.

12th paragraph

The majority of the steam and power conversion system is located in the turbine building, which is a non-seismic, non safety-related building

10A.1.1 Protective Features

Same as Reference Design

10A.1.2 COL Information

Same as Reference Design

10A.1.3 References

Same as Reference Design

Table 10A.1-1

Summary of Important Design Features and Performance Characteristics of the Steam and Power Conversion System

Same as the Reference Design except in the following values

Parameter	Value
Nuclear Steam Supply, Full Power Operation:	
Rated reactor core power, (MWt)	
Design NSSS power, (MWt)	
Reactor steam outlet pressure, MPa (psia)	
Reactor rated steam flow, kg/s (lb/hr)	
Reactor nominal outlet steam moisture, %	
Reactor inlet feedwater temp, C° (°F)	220 (428)
Turbine-Generator:	
Nominal Rating (MWe)	1636
Turbine type	Tandem compound, six flow, 144.6 cm (57”)last stage bucket
Operating speed (rpm)	
Turbine throttle steam pressure, MPa (psia)	6.6767 (967.4)
Throttle steam nominal moisture, (%)	0.4
Moisture Separator/Reheaters (MSRs) :	
Number of MSRs per unit	
Stages of moisture separation	
Stages of reheat	
Main condenser:	
Type	Single pressure
Design duty, MW (Btu/h)	~ 2,895 (9.88*10$^{9)}$
Circulating water flow rate, m^3/s (gpm)	~ 721.8 (1,14038,000)
Circulating water temperature rise, °C (°F)	~ 9.7 (17.546)
Condensate pumps:	
Number of pumps	
Pump type	

Table 10A.1-1

Summary of Important Design Features and Performance Characteristics of the Steam and Power Conversion System

Same as the Reference Design except in the following values

Parameter	Value
Driver type	
Normal flow, m^3/s (gpm)	0.56 (8877)
Total head m (ft.)	260 (853)
Rated motor power, MW (hp)	1.9 ($2.55*10^{6)}$
Feedwater heaters:	
Low Pressure Heaters	
a. No. 1:	
Number per stage	3 (duplex LP1/LP2)
Stage pressure, kPa (psia)	25.3 (3.767)
Duty per shell, MW (Mbtu/h)	31.546 ($12.8*10^4$)7.8)
b. No. 2:	
Number per stage	3 (duplex LP1/LP2)
Stage pressure, kPa (psia)	120.2 (17.43)
Duty per shell, MW (Mbtu/h)	91.93 ($31.4*10^4$)3.7)
c. No. 3:	
Number per stage	2
Stage pressure, kPa (psia)	326.0 (47.328)
Duty per shell, MW (Mbtu/h)	111.00 ($37.9*10^4$)8.8)
d. No. 4:	
Number per stage	2
Stage pressure, kPa (psia)	523.0 (75.85)
Duty per shell, MW (Mbtu/h)	61.02 ($20.8*10^4$).2)
High Pressure Heaters	
e. No. 5:	
Number per stage	1 (Feedwater deaerator storage tank)
Stage pressure, kPa (psia)	988.1 (143.31)
Duty per shell, MW (Mbtu/h)	295.879 ($100.9*10^4$).3)

Table 10A.1-1

Summary of Important Design Features and Performance Characteristics of the Steam and Power Conversion System

Same as the Reference Design except in the following values

Parameter	Value
f. No. 6:	
Number per stage	2
Stage pressure, kPa (psia)	15954.5 (231.326)
Duty per shell, MW (Mbtu/h)	95.108 (32.4*10^4).4)
g. No. 7:	
Number per stage	2
Stage pressure, kPa (psia)	2456.2 (356.24)
Duty per shell, MW (Mbtu/h)	120.657 (41.1*10^4)1.4)
Reactor Feedwater Pump:	
Number of pumps	
Pump type	
Driver type	
Normal flow, m3/s (gpm)	0.92 (14.6*10^3,605)
Total head at runout, m (ft.)	
Rated motor power, MW (hp)	

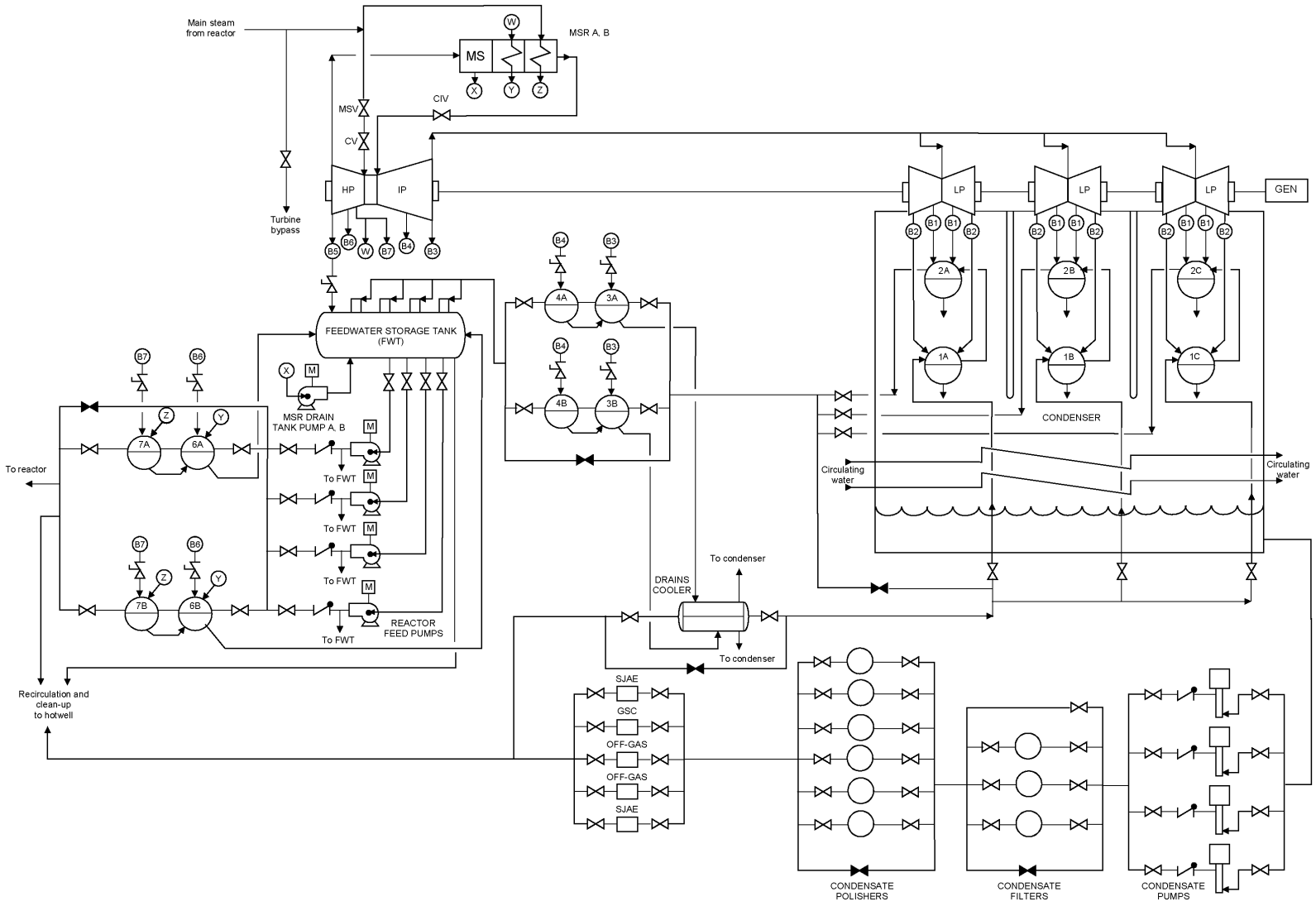

Figure 10A.1-1. Power Cycle Schematic

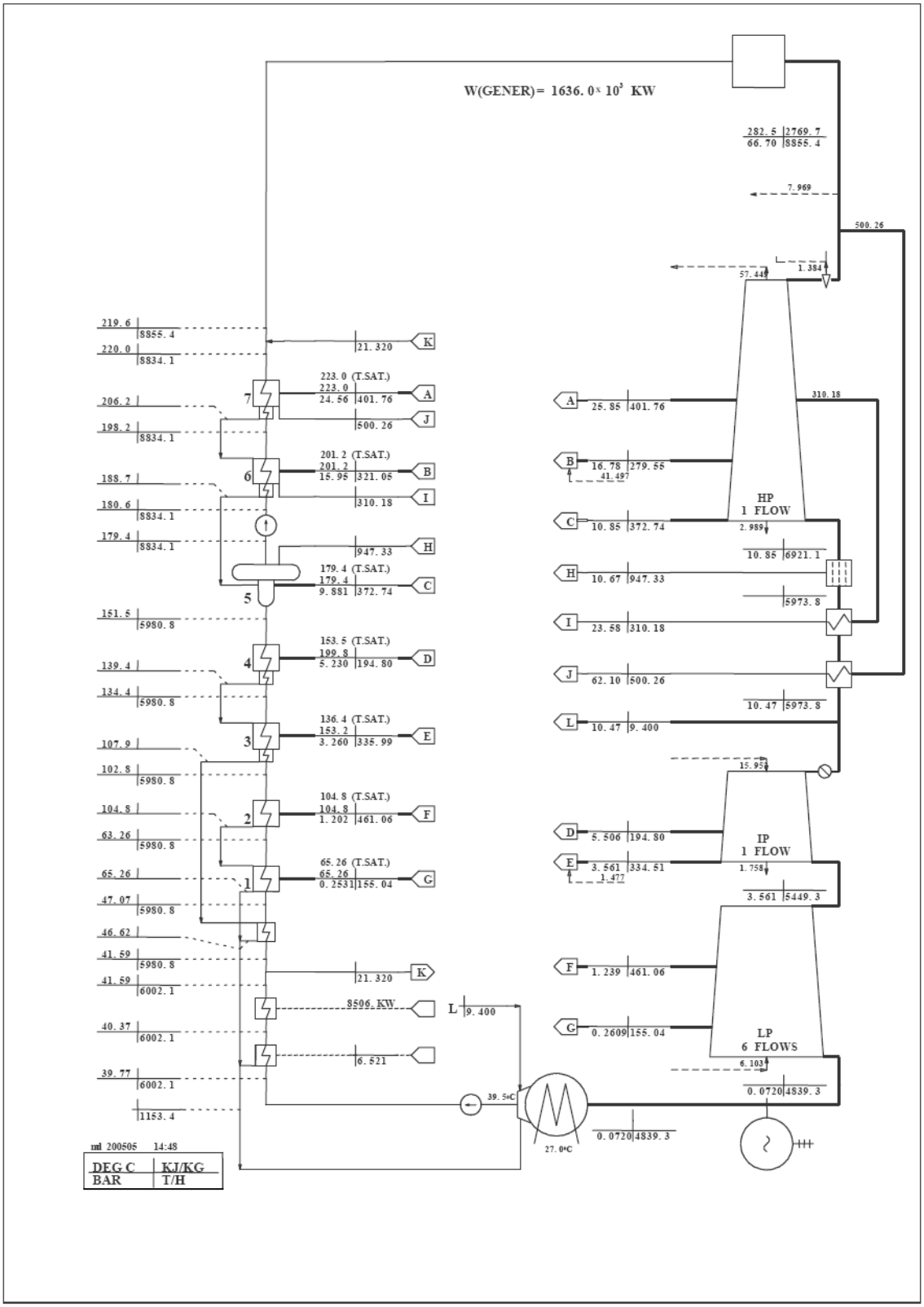

Figure 10A.1-2. Rated Heat Balance

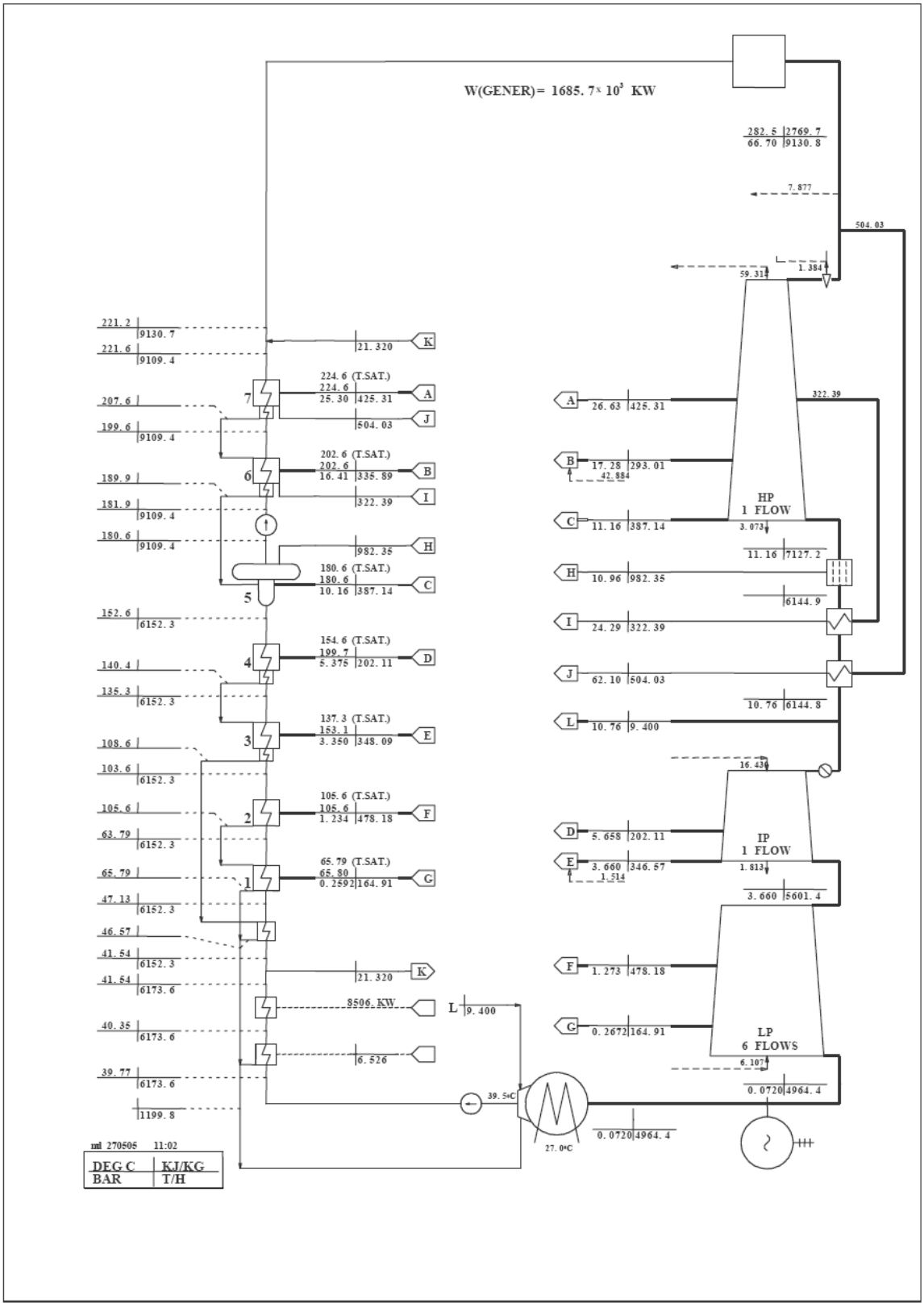

Figure 10A.1-3. Valves Wide Open - Heat Balance

10A.2 TURBINE GENERATOR

10A.2.1 Design Bases

Same as the Reference Design

10A.2.1.1 Safety (10 CFR 50.2) Design Bases

Same as Reference Design

10A.2.1.2 Non-Safety Power Generation Design Bases

Same as the Reference Design except in the following paragraphs:

(6) The TG is designed to support the plant availability goals by utilizing 2/3 or 2/4 coincident trip logic for all but the vibration trips (which are at least 2/2 per bearing). Similarly, all turbine control functions, which are required for power generation, use at least dual redundant controllers and triply redundant control inputs

10A.2.1.3 Functional Limitations Imposed by the Design or Operational Characteristics of the Reactor Coolant System

Same as in Reference Design

10A.2.2 Description

10A.2.2.1 General Description

Same as the Reference Design except in the following paragraphs:

The Turbine-Generator consists of a 1800 rpm turbine, moisture separator/reheaters, generator, exciter, controls, and associated subsystems. The turbine is a 4 cylinder machine, composed of one combined HP/IP module and three identical double flow LP modules, with moisture separation and intermediate reheating. It drives a 4 pole synchronous generator TA 1700-83. This generator is a direct driven, three-phase, 60 Hz, 1800 rpm synchronous generator.

The TG unit and associated piping, valves, and mechanical controls are located completely within the Turbine Building. There are no safety-related systems or components located within the Turbine Building with the exception of the Reactor Protection System (RPS) sensors on the TG unit, condenser, steam lines and turbine bypass valves. The safety-related switches or transducers used to detect fast closure of the turbine main stop and control valves and high-high condenser back pressure are fail safe, hence any local failure associated with the TG unit does not adversely affect any safety-related equipment. Failure of TG equipment cannot preclude safe shutdown of the reactor.

10A.2.2.2 Component Description

Same as the Reference Design except in the following paragraphs:

Steam admission valves - The admission valves are arranged between the reactor after the MSIV's and the HP admission, and between the MSRs and the IP admission. As the MSRs

provide a significant steam capacity and energy storage, it is necessary to be able to control the IP steam flow to prevent in particular any risk of overspeed.

The steam admission is controlled by sets of two series-mounted individual valves, each of which has an essential and independent function. One valve fulfills a protection function (stop valve) and the other a control and protection function (control valve). This independence improves the system's reliability.

The two types of valves are fitted into two separate chests which are welded together. The shape of the components has been designed and experimentally tested to obtain good flow stability and reduce pressure drops.

Each HP stop valve contains a permanent steam strainer to prevent foreign matter from entering the control valves and turbine.

HP Steam Admission - The HP steam admission is provided with four assemblies, each composed of one main steam stop valve and one control valve.

The two valves are of the "pull-to-open" type, i.e. their plug is built on a rod which is pulled by a servomotor against the continuous force of a spring for opening.

IP Steam Admission - The IP steam admission is provided with four sets of valves, each of which is composed of one reheat steam stop valve and one intercept control valve.

The large steam flows admitted to the IP casing has led to the adoption of butterfly-type valves. The disc of each valve can rotate by 90° (from closed to open position) by a pull of the servomotor.

HP/IP module - The design features a combined HP/IP cylinder module, which contains the HP and IP steam paths in opposite flows, in a single-shell casing. The HP and IP steam admissions, which constitute hot areas, are located at the center of the module and the exhausts at its two extremities. This layout, which is favorable to the overall thermal equilibrium of the section, also facilitates the arrangement of connection piping.

HP Section - The HP turbine receives steam through four steam leads, one from each main steam control valve outlet. The steam is expanded axially across 8 stages of stationary and rotating blades. Extraction steam from the turbine at 2 locations supplies the 6th and 7th stages of feedwater heating and the heating steam to the first stage reheaters. HP turbine exhaust steam is collected in four cold reheat pipes. Most of the exhaust steam is routed to the MSR inlet, but part of it is diverted and supplies the 5th stage of feedwater heating.

IP Section - After removal of the water content and reheating in the MSRs, the steam is directed through four steam inlet pipes in the IP part of the HP/IP module, where it expands again in 3 stages of stationary and rotating blades. This feature enables a longer single flow expansion compared to traditional designs, which is an advantage in terms of efficiency. Extraction steam from the IP section of the HP/IP module supplies the 3rd and 4th stages of feedwater heating.

Moisture Separator Reheaters - Two horizontal cylindrical-shell, combined moisture separator/reheaters (MSRs) are installed in the steam path between the high and intermediate pressure turbine. The MSRs serve to dry and reheat the HP turbine steam exhaust (crossaround steam), before it enters the intermediate-pressure turbines. This improves cycle efficiency and reduces moisture related erosion and corrosion in the intermediate-pressure turbines.

Crossaround steam is piped into the bottom of the MSR. Moisture is removed in chevron-type moisture separators, and is drained to the moisture separator drain tanks and, from there, is pumped back to the feedwater deaerator storage tank. The dry crossaround steam next passes upward across two stages of reheaters, which are supplied with turbine extraction steam (1st reheating stage) and main steam (2nd reheating stage). Finally, the crossaround steam is routed to the combined intermediate valves (CIVs), which are located just upstream of the intermediate-pressure turbine inlet nozzles.

The reheaters drain, via drain tanks, to the high-pressure heaters. Safety valves are provided on the MSR for overpressure protection.

LP modules - Each of the 3 LP turbines receives steam from the IP outlet, through cross-under pipes fitted with expansion bellows.

Design data - LP module	
Number of stages	2x5
Length of the LSB	1446 mm (57”)
Exhaust area (2 flows)	35.8 m²

The LP modules are each composed of an inner structure and an exhaust hood. The inner structure supports the LP blade carriers and the LP bearings. It rests directly on the foundation by means of supports in the same manner as the HP/IP casing. The outer casing collects the steam exhausted from the last LP stages. Installed independently of the inner casing, the exhaust hood is welded onto the condenser which is itself directly anchored to the foundation slab. The exhaust hood can freely move in all directions. A flexible sealing ring provided at each extremity ensures vacuum tightness between this exhaust hood and the inner LP structure. This arrangement characterizes the “independent structure.”

The inner LP casing is provided with internal headers allowing water to be injected in the exhaust structures and preventing any excessive temperature rise in no-load operation or at low loads.

Extraction steam from the LP turbines supplies the 1st and 2nd stages of feedwater heating.

Extraction Non-return Valves - Upon loss of load, the steam contained downstream of the turbine extractions could flow back into the turbine, across the remaining turbine stages, and into the condenser. Associated condensate could flash to steam under this condition and contribute to the backflow of steam or could be entrained with the steam flow and damage the turbines. Extraction non-return valves are installed in the extraction lines to the third, forth, fifth, sixth and seventh stage of turbine extractions to guard against this backflow and the resulting potential damage due to water entrainment or overspeed condition.

Generator - The generator is directly driven by the turbine and supplies the step-up transformer with medium voltage. It is a 4-pole machine and is cooled by internal hydrogen circulation. The field winding is directly cooled by gas. The stator winding is directly cooled by an internal circulation of deionized water. The generator is designed according to IEC recommendations.

The auxiliaries include cooling system, gas supply and shaft sealing circuits. The generator brushless excitation system is controlled by an automatic voltage regulator.

The frame, which constitutes the outer envelope, is made of an assembly of heavy welded steel plates, forming a cylindrical shell. As the machine is gas tight, the hydrogen coolers are located in the frame itself. They are mounted vertically.

The magnetic core is composed of a stacking of thin silicon sheet steel laminations with low specific losses. It is divided into packets separated by radial vents, which are cooled by hydrogen.

The stator winding is of a lapped type with two bars per slot type. Deionized water circulates in hollow stainless tubes, which alternate with solid copper strands, thus ensuring the direct cooling of conductors. Each bar is insulated over its whole length, straight portions and the involutes.

The 12 terminals are arranged on two removable casings, made of welded non-magnetic steel sheets. These terminals and their connecting leads are also directly cooled by water circulation.

The generator rotor is constituted of solid, alloyed steel forging with high tensile strength, elaborated in an electric furnace and cast under vacuum. The slots for the field coils are milled in the central body of the rotor. The coils are made of silver alloyed copper strips, which improve their mechanical behavior.

The field winding is directly cooled by hydrogen derived from axial ducts arranged under the slots. The system of cooling with radial vents provides a uniform distribution and thus avoids any risk of thermal unbalance. An axial type fan is mounted on each rotor end. The rotor terminates with the rotating diodes exciter (armature) mounted inside a cylindrical retaining ring.

The auxiliary systems ensure:

(1) Filling, make-up and control of hydrogen cooling circuit;

(2) Seal oil circulation, control and purification; and

(3) Circulation, treatment and cooling of deionized water for stator cooling.

Excitation regulation equipment - The rotor of the generator is energized by a rotating diodes excitation system. An excitation transformer, directly connected to the generator terminals feeds the excitation cubicle, including the thyristor rectifier bridges, circuit breaker and digital automatic voltage regulator. The excitation and voltage regulation system ensures:

(1) The D.C. supply of the generator field winding;

(2) The automatic control of the stator terminal voltage either in separate network operation or in parallel operation with other units connected to the network;

(3) Short time overexcitation, in case of short-circuit on the network;

(4) Fast restoring of stator terminal voltage after a fault on the high voltage side;

(5) Supply or absorption of reactive power by the generator within the limits of the generator load diagram; and

(6) The generator contribution to the general stability of the system.

The generator is protected against electrical faults by the electrical protection relays, which are part of the protection & monitoring system and/or excitation system. The information is treated in both Chapters 7 and 8, Electrical and DCIS of this document the DCIS. Main protections are differential, stator ground fault, rotor ground fault, current unbalance and overvoltage.

Control and safety system - The TG uses a digital monitoring and control system, which, in coordination with the Turbine Generator and Pressure Control System, controls the turbine speed, and load for startup and normal operations. The TG control system operates the turbine main stop valves, governing valves, reheat stop valves, and intercept valves. TG supervisory instrumentation is provided for operational analysis and malfunction diagnosis.

The base controllers are triply redundant, the fundamental protection controller is independent and in 2/3 logic. It controls the turbine stop valves through a hydraulic tripping unit. Additionally, dual redundant automatic controllers fulfill the communication functions with the plant DCIS.

A more detailed description of the control system, including architecture and redundancy is described in the System Design Description of Turbine Governing System.

Auxiliary systems - TG accessories include the bearing lubrication oil system, electrohydraulic control system, turning gear, turbine gland sealing system, LP exhaust hood spray system, hydrogen and CO2 system, seal oil system, stator cooling water system, and turbine-generator supervisory instrument (TSI) system.

10A.2.2.3 Normal Operation

Same as the Reference Design except in the following paragraphs:

Operation of the TG is under the control of the Turbine controller. During normal operation, HP stop valves, IP stop and control valves are fully opened. HP control valves are throttling to control the reactor pressure.

During turbine start-ups and transients, the controller and control valves perform the speed control and the load control of the turbine, while the bypass valves control reactor pressure .

In normal operation the turbine control system receives a pressure regulation (flow demand) signal such that reactor pressure is controlled by the turbine control valves.

10A.2.2.4 Turbine Overspeed Protection System

Included in Turbine Protection System (subsection 10A.2.2.5 below)

10A.2.2.5 Turbine Protection System

Same as the Reference Design with the following additional paragraphs:

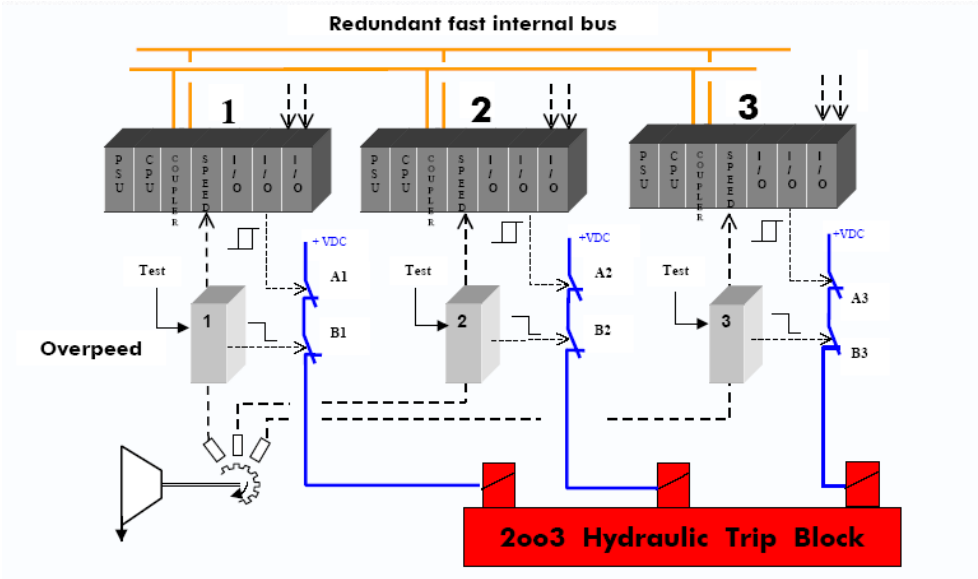

In addition to the normal speed control function provided by the turbine control system, a separate turbine protection system is included. This system is a highly reliable and triply redundant system, which is classified as non-safety-related.

The protection system utilizes three redundant signals with a hydraulic two-out-of-three voting logic built in the hydraulic trip block. Loss of one signal will neither cause nor prevent a trip.

The hydraulic lines are fail-safe; that is, if one were to be broken, loss of hydraulic pressure would result in a turbine trip

The turbine will be tripped on the following signals:

(1) Overspeed

(2) Remote trip pushbutton in control room

(3) Manual trip pushbutton (local)

(4) High condenser pressure

(5) Low lube oil pressure

(6) High exhaust hood temperature

(7) Shaft axial position

(8) Low level of oil tank

(9) High bearing metal temperature

(10) Generator trip

(11) Turbine controller fault

(12) Excessive turbine rotor vibration

(13) NSSS trip signals (reactor high level and, MSIV closure and Loss of two pressure control channels)

(14) High moisture separator reheater shell side pressure

When a trip signal is activated, it overrides all operating signals and trips all stop and control valves.

10A.2.2.6 Turbine-Generator Supervisory Instruments

Included in Turbine Protection System (subsection 10A.2.2.5 above)

10A.2.2.7 Testing

Same as the Reference Design except in the following paragraphs:

The trip devices can be tested remotely at rated speed, under load.

Provisions for testing each of the following devices while the unit is operating are included:

(1) Main stop and control valves

(2) Reheat stop valves and intercept control valves

(3) Electro-hydraulic tripping device (solenoid trip valves)

(4) Overspeed protection control

(5) Condenser vacuum trip

(6) Lubricating oil trip

(7) MSR shell over pressure trip

(8) Turbine extraction non-return valves

(9) Lubricating oil pumps

10A.2.3 Turbine Integrity

10A.2.3.1 Materials Selection

Same as the Reference Design except in the following paragraphs:

Turbine rotors and parts are made from vacuum melted or vacuum degassed Ni-Cr-Mo-V alloy steel by processes, which minimize flaw occurrence and provide adequate fracture toughness. Tramp elements are controlled to the lowest practical concentrations consistent with good scrap selection and melting practice, and consistent with obtaining adequate initial and long-life fracture toughness for the environment in which the parts operate. The turbine materials have the lowest fracture appearance transition temperatures (FATT) and highest Charpy V-notch energies obtainable, on a consistent basis, from water quenched Ni-Cr-Mo-V material at the sizes and strength levels used. Because actual levels of FATT and Charpy V-notch energy vary depending upon the size of the part, and the location within the part, etc., these variations are taken into account in accepting specific forgings for use in turbines for nuclear application.

Actual material properties of turbine rotors, as mentioned above, are obtained through precise destructive tests of actual samples from each turbine rotor. These tests are COL applicant scope.

10A.2.3.2 Fracture Toughness

Same as the Reference Design except in the following paragraphs:

Suitable material toughness is obtained through the use of selected materials as described in Subsection 10.2.3.1, to produce a balance of adequate material strength and toughness to ensure safety while simultaneously providing high reliability, availability, efficiency, etc. during operation.

Stress calculations include components due to centrifugal loads and thermal gradients. Fracture mechanics calculations are performed on the rotors taking into account the maximum size defect acceptable after US controls. 2 types of cycles are applied to the defect: high cycle fatigue (HCF) for alternate bending stresses, and low cycle fatigue (LCF) for start-up. Calculations verify that the initial defect, after increasing due to LCF during the equipment lifetime will not propagate under HCF and will remain not critical as regards brittle fracture with a large margin. Adequate material fracture toughness is assured by destructive tests on material samples using correlation methods which are as conservative, or more so, than those presented in Reference 10.2-1. The COL applicant will provide the test data and the calculated toughness curve to the NRC staff for review. (See Subsection 10.2.5.1 for COL information.)

10A.2.3.3 High Temperature Properties

Same as the Reference Design except in the following paragraphs:

The operating temperatures of the high/intermediate-pressure rotors are below the creep stress rupture range.

Therefore, creep-rupture is not a significant failure mechanism.

10A.2.3.4 Turbine Design

Same as the Reference Design except in the following paragraphs:

The turbine assembly is designed to withstand normal conditions and anticipated transients, including those resulting in turbine trip, without loss of structural integrity. The design of the turbine assembly meets the following criteria:

(1) Turbine shaft bearings are designed to retain their structural integrity under normal operating loads and anticipated transients, including those leading to turbine trips.

(2) The multitude of natural critical frequencies of the turbine shaft assemblies existing between zero speed and 20% overspeed are controlled in the design and operation so as to cause no distress to the unit during operation.

(3) The maximum tangential stress resulting from centrifugal forces, interference fit, and thermal gradients does not exceed 0.75 of the yield strength of the materials at 115% of rated speed.

(4) (4) The design overspeed of the turbine is more than 10 % above the highest anticipated speed resulting from a loss of load. The basis for the assumed design overspeed will be submitted to the NRC staff for review. (See Subsection 10.2.5.2 for COL information.)

(5) The turbine disk design facilitates in service inspection of all high stress regions. The turbine rotor design is based on using welded rotor technology rather than shrunk-on disks

10A.2.3.5 Pre-service Inspection

Same as the Reference Design except in the following paragraphs:

The Quality Assurance document includes the following tests performed in the supplier's factories, of which the Customer will at least receive a report.

Rotors

(1) Chemical analysis (cast)

(2) Preliminary ultrasonic examination before gashing

(3) Mechanical tests

(4) FATT curves

(5) Final ultrasonic examination

(6) Balancing test of the bladed rotor

(7) Overspeed test of bladed rotor

Blades

(1) Chemical analysis

(2) Hardness test

(3) Mechanical tests

(4) Ultrasonic examination

10A.2.3.6 Inservice Inspection

Same as the Reference Design except in the following paragraphs:

In general the design of each main turbine cylinder is such that each HP/IP or LP cylinder need not be inspected by opening it's casing more often than every 10 years.

The list below describes the most important inspection tasks performed during maintenance outages. The tasks for HP/IP and LP modules are within the COL licensee scope and can differ, depending on whether the casing is opened or not.

General

Prior to Shutdown

- Recording of vibration levels at steady load.
- General recording of main operation parameters at full load
- (live steam, bearing metal & lube oil).
- Tests at no load (tripping, steam valves closure, and etc.).
- Governing system tests.
- Cold Turbine
  - Check of expansion values (return to position 0).

  - Opening of Pedestals
  - Recording of rotor/bearing position.
  - Check of thrust bearing clearances.
  - Opening of Cylinders
  - Measurement of clearances and displacements.
  - Concentricity check.
  - Measurement of radial clearances with coupled rotors.
  - Measurement of the rotor displacements.
- Re-assembly
  - Measurement of clearances.
  - Recording of bearing/rotor positions.

HP/IP Cylinder (closed casing)

- Check of rotor radial centering.
- Check of HP/IP/LP coupling co-axiality.
- Check of shaft/coupling guard relative positions.
- Check of clearance at fixed point key (rear).
- Check of thrust bearing clearance.
- Check of casing load distribution.
- Check of instrumentation fastening.

HP/IP Cylinder (open casing)

- Casing
  - Visual inspections (joint plane, welds, and etc.).
  - Check of casing load distribution.
  - Check of casing bolts (magnetic particle and dimensional inspections).
- Diaphragms
  - Inspection of spring-loaded sealing segments.
  - Inspection of suspension and vertical centering keys.
- Fixed blades
  - Liquid penetrant inspection/Magnetic Particle Inspection (MPI)
- Gland Seal Boxes
  - Inspection of spring-loaded sealing segments.

  - Inspection of suspension and vertical centering keys.
- Rotors
  - Visual inspections
    (surface condition, coupling flange, thrust bearing collar and etc.).
  - Check of balancing weights.
  - Demagnetizing.
- Moving blades
  - Visual inspection + MPI.
  - Ultrasonic inspection of blade roots.
- Pipes
  - Visual inspection of flange mating surfaces.
  - Inspection of inlet and exhaust flange bolts
    (MPI + bolt elongation measurement).
  - Inspection of joints.

LP Cylinders (closed casing)

- Check of radial centering of gland seal boxes at location of first segment.
- Check of coupling flange co-axiality.
- Check of relative shaft/cylinder axial positioning.
- Check of relative shaft/coupling guard axial positioning.
- Visual inspection of inner casing support stop blocks.
- Visual inspection of inner casing support anchor bolts.
- Inspection inner cylinder support points.
- Inspection of inner cylinder axial fixed points.
- Check of rupture disc sealing.
- Check of balancing door correct operation.

LP Cylinders (open casing)

- Exhaust hood
  - Visual inspections
  - (flexible seal ring, joint plane, spray water header, and etc.).
  - Check of rupture disc sealing.
  - Check of balancing door correct operation.

- Inner Casing
  - Visual inspections (joint plane, heat screens).
  - Inspection of drain points.
  - Check of casing load distribution.
- Fixed blades
  - Visual inspection + Liquid penetrant inspection / MPI
  - Inspection of spring-loaded sealing segments
- Gland Seal Boxes
  - Centering check.
  - Inspection of spring-loaded sealing segments.
  - Inspection of stop pins and screws.
- Pipes
  - Inspection of steam pipe elbow vanes.
  - Inspection of steam extraction pipes.
- Rotors
  - Visual inspections (journals, gland seals, coupling flanges).
  - Inspection of balancing weights.
- Moving blades
  - Visual inspection + MPI.
  - Check for erosion of last stage blades.
  - Ultrasonic inspection of blade roots.

Shaftline

- Alignment check in cold state.
- Demagnetization check.
- Protection of coupling flanges.

Pedestals

- Pedestals
  - Visual inspections
    (pedestals & bearings, lube oil inlets & outlets, etc.).
  - Bearing tightening check.
- Bearings

  - Visual inspections.
  - Dimensional check.
- Jacking oil system
  - Inspection of pipes.
  - Jacking oil system check.
- Thrust bearing
  - Full visit.

Steam admission Valves

- HP Control Valves
  - Visual inspections.
  - Inspection of bolts (MPI and bolt elongation measurement).
  - Tightness check.
  - Check of full stroke.
  - Liquid penetrant inspection of stem leakoff flow pipes.
- HP Stop Valves
  - Visual inspections.
  - Inspection of bolts (MPI and bolt elongation measurement).
  - Tightness check.
  - Check of full stroke and pilot valve stroke.
  - Inspection of strainer.
- IP Stop + Control Valves
  - Check of correct operation before disassembly.
  - Inspection of dampers.
  - Disassembly of bearings.
  - Tightness check.
  - Visual inspection of gland boxes.
  - Inspection of bolts (MPI and bolt elongation measurement).

Auxiliaries

- Governing / Safety System
  - Overhaul of HP servomotors.
  - Overhaul of IP servomotors.

- Turning Gears
  - Inspection of main turning gear & SSS Clutch.
  - Inspection of auxiliary turning gear.
- Lube oil system
  - Oil tank draining.
  - Visual inspection of return strainer.
  - Overhaul of shaft-driven main oil pump.
  - Tightness check of tank top.
- Control Fluid System
  - Control fluid analysis.
  - Fluid tank draining.
  - Overhaul of pumps.
  - Inspection of filters.

Prior to re-assembly

- Fill in the equipment data sheets.
- Check points raised in Inspection Reports.
- Perform relevant control system tests.
- Perform re-balancing if required.
- Re-condition turbine heat insulation.

Functional Tests of Auxiliary Systems to be Performed During Overhaul Maintenance

- TG Controller
  - Check of connections.
  - Check of power supplies.
  - I/O checks.
- Check of position loop cards.
- Check of Turbine Supervisory Instrumentation.
- Lube oil - Jacking oil systems tests.
- Safety system tests.
- Control system tests.
- Check of control circuit
  - Static tests.

- Dynamic tests.
- Check of the correct operation of the auxiliary systems

10A.2.4 Evaluation

Same as the Reference Design except in the following paragraph:

8th paragraph

The exhaust hoods of the LP turbines and the condenser form a unique box that collects the steam exhausting from the LP turbines. The connection with the LP turbines inner casings is made by circular expansion joints.

10A.2.5 COL Information

10A.2.5.1 Low Pressure Turbine Disk Fracture Toughness

Same as the Reference Design .

10A.2.5.2 Turbine Design Overspeed

Same as Reference Design.

10A.2.5.3 Turbine Inservice Test and Inspection

Same as Reference Design.

10A.2.5.4 Extraction Non-return Valves

Not required

10A.2.5.5 References

None

Figure 10A.2-1. Turbine Stop Valve Closure Characteristic

Same as Reference Design.

Figure 10A.2-2. Turbine Control Valve Fast Closure Characteristic

Same as Reference Design.

Figure 10A.2-3. Acceptable Range for Control Valve Normal Closure Motion

Same as Reference Design.

Figure 10A.2-4. Generator Hydrogen and CO_2 System

To be provided in COL phase

10A.3 TURBINE MAIN STEAM SYSTEM

Same as Reference Design.

10A.3.1 Design Bases

10A.3.1.1 Safety (10 CFR 50.2) Design Bases

Same as Reference Design.

10A.3.1.2 Non-Safety Power Generation Design Bases

Same as Reference Design.

10A.3.2 Description

10A.3.2.1 General Description

Same as Reference Design.

10A.3.2.2 Component Description

Same as Reference Design.

10A.3.2.3 System Operation

Same as the Reference Design except in the following paragraphs:

1st paragraph

At low plant power levels, the Main Steam Supply System may be used to supply steam to the turbine gland steam seal system. At high plant power levels, turbine gland sealing steam is normally supplied from the related turbine extraction.

2nd paragraph

Steam is supplied to both stages of the crossaround steam reheaters in the TG system from the TG speed-up. Between 0% and 30% the regulating valve on stage 2 regulates the steam supply pressure; above 30% it is wide open.

10A.3.3 Evaluation

Same as Reference Design.

10A.3.4 Inspection and Testing Requirements

Same as Reference Design.

10A.3.5 Water Chemistry (PWR)

Same as Reference Design.

10A.3.6 Steam and Feedwater System Materials

Same as Reference Design.

10A.3.6.1 Fracture Toughness of Class 2 Components

Same as Reference Design.

10A.3.6.2 Materials Selection and Fabrication

Same as Reference Design.

10A.3.7 COL Information

10A.3.7.1 Procedures to Avoid Steam Hammer and Discharge Loads

Same as Reference Design.

10A.3.7.2 MSIV Leakage

Same as Reference Design.

10A.3.7.3 Conformance with Regulatory Guide 1.71

Same as Reference Design.

10A.3.8 References

Same as Reference Design.

Table 10A.3-1

Turbine Main Steam System Design Data

Same as the Reference Design except in the following values

Main Steam Piping	
Design flow rate at 6.67 MPaA and 0.40% moisture kg/s (Mlbm/hr)	2459.8 (19.52)
Normal steady-state velocity, m/s (ft/s)	42.1 (138)
Number of lines	
Nominal diameter, cm (in)	
Minimum wall thickness, mm (in)	
Design pressure, MPaG (psig)	
Design temperature, °C (°F)	
Design code	
Seismic design	

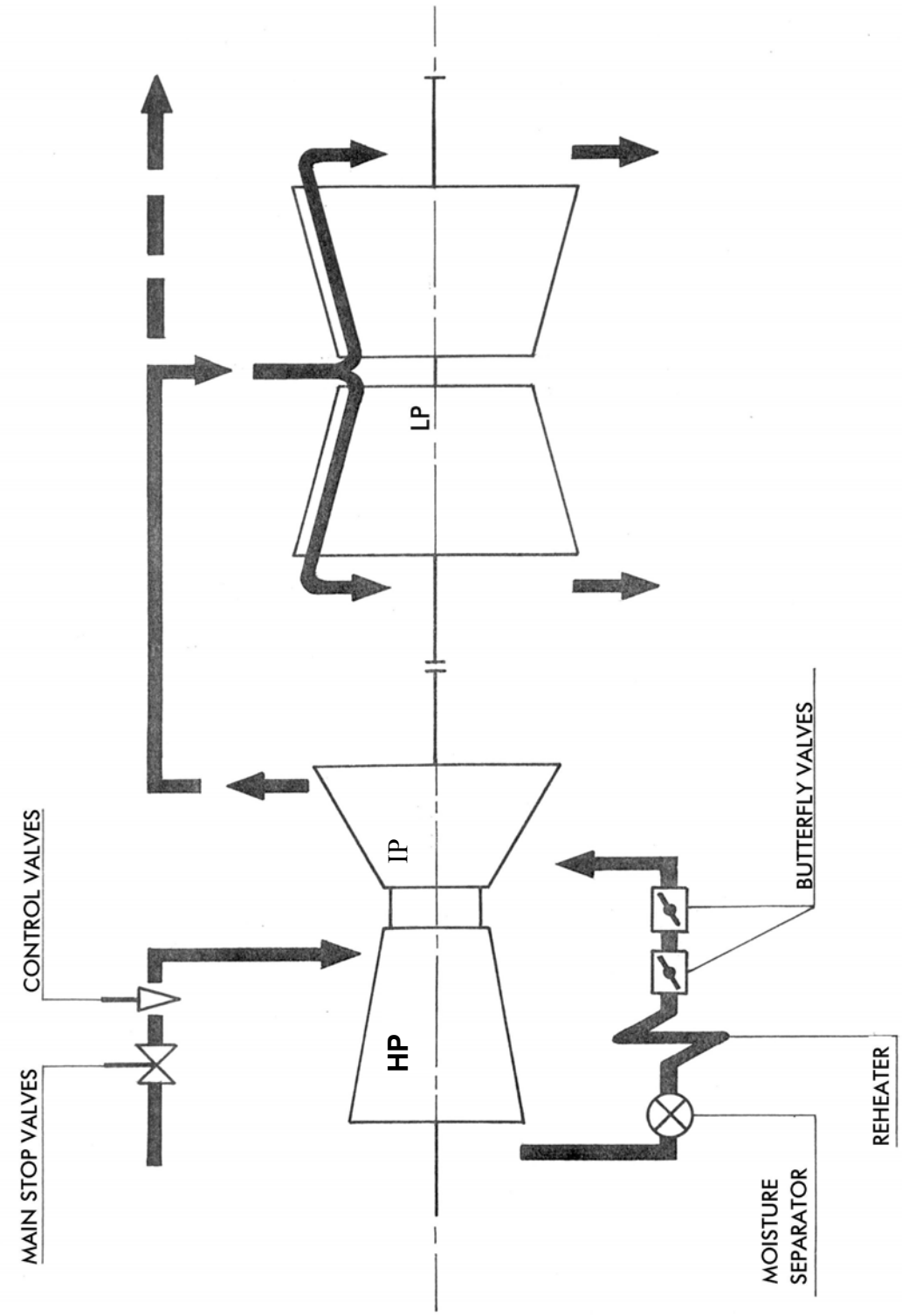

Figure 10A.3-1. Turbine Main Steam System

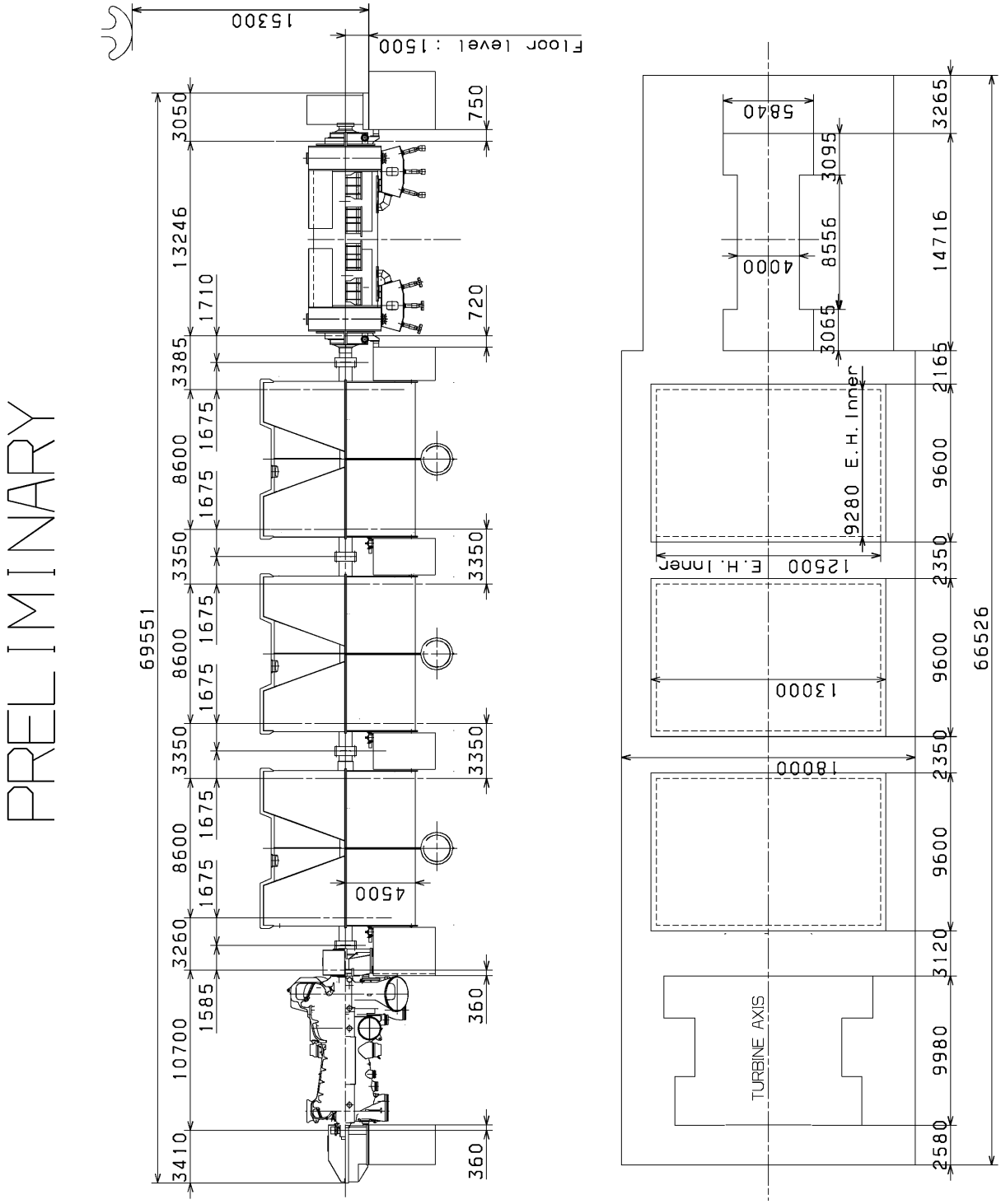

Figure 10A.3-2. Main Turbine System

10A.4 OTHER FEATURES OF STEAM AND POWER CONVERSION SYSTEM

Same as Reference Design.

10A.4.1 Main Condenser

Same as Reference Design.

10A.4.1.1 Design Bases

Same as Reference Design.

10A.4.1.2 Description

10A.4.1.2.1 General Description

The main condenser is a single-pressure, single shell, deaerating unit. The monobloc condenser is located beneath the low-pressure turbine.

The condenser includes six tube bundles (two transversely arranged beneath each turbine LP casing), each fitted with a separate water box on the cooling water inlet and outlet sides. (Figure 10A.4-1).

The condenser well is fitted with a water channel extending to the bottom of the condenser well and conveying the condensate to the condensate pumps. (Figure 10A.4-2).

The condenser is located in a pit below the Turbine Building operating floor and is supported on the Turbine Building basemat. Failure of or leakage from a condenser hotwell during plant shutdown only results in a minimum water level in the condenser pit. The exhaust hoods of the LP turbines and the condenser form a unique box that collects the steam exhausting from the LP turbines. The connection with the LP turbines inner casings is made by circular expansion joints. Two low-pressure feedwater heaters are located in the condenser neck below each turbine LP casing. Piping is installed for hotwell level control and condensate sampling.

10A.4.1.2.2 Component Description

Table 10.4-1 provides general condenser design data and reference data that is typical of condensers operating with once-through circulating water systems. Nothing in this section precludes the use of a multiple pressure condenser and series (instead of parallel) circulating water system because these have no effect on the Nuclear Island.

10A.4.1.2.3 System Operation

Same as the Reference Design except in the following paragraph:

2nd paragraph

Other flows occurring periodically or continuously originate from:

(1) the minimum recirculation flows of the condensate pumps;

(2) feedwater line startup flushing;

(3) turbine equipment clean drains;

(4) low-point drains; and

(5) makeup, etc.

10A.4.1.3 Evaluation

Same as Reference Design.

10A.4.1.4 Tests and Inspections

Same as Reference Design.

10A.4.1.5 Instrumentation Applications

10A.4.1.5.1 Hotwell Water Level

Same as Reference Design.

10A.4.1.5.2 Pressure

Same as Reference Design.

10A.4.1.5.3 Temperature

Same as Reference Design.

10A.4.1.5.4 Leakage

Same as Reference Design.

10A.4.2 Condenser Air Removal system

Same as Reference Design.

10A.4.2.1 Design Bases

Same as Reference Design.

10A.4.2.2 Description

Same as Reference Design.

10A.4.2.3 Evaluation

Same as Reference Design.

10A.4.2.4 Tests and Inspections

Same as Reference Design.

10A.4.2.5 Instrumentation Applications

Same as Reference Design.

10A.4.2.5.1 Steam Jet Air Ejectors

Same as Reference Design.

10A.4.2.5.2 Mechanical Vacuum Pump

Same as Reference Design.

10A.4.3 Turbine Gland Seal System

Same as Reference Design.

10A.4.3.1 Design Bases

Same as Reference Design.

10A.4.3.2 Description

10A.4.3.2.1 General Description

Same as the Reference Design except in the following paragraph:

3rd paragraph

The turbine gland seal system is illustrated in Figure 10A.4-4. The turbine gland seal system consists of a sealing steam pressure regulator, sealing steam header, a gland steam condenser, with two full-capacity exhauster blowers, and the associated piping, valves and instrumentation.

10A.4.3.2.2 System Operation

Same as the Reference Design except in the following paragraph:

2nd paragraph

The seal steam header pressure is regulated automatically by a pressure controller. During startup and low load operation, the seal steam is supplied from the main steam line or auxiliary steam header. At all loads, gland sealing can be achieved using auxiliary steam so that plant power operation can be maintained without appreciable radioactivity releases even if highly abnormal levels of radioactive contaminants are present in the process steam, due to unanticipated fuel failure in the reactor.

10A.4.3.3 Evaluation

Same as the Reference Design except in the following paragraph:

1st paragraph

The TGSS is designed to prevent leakage of radioactive steam from the main turbine shaft glands and the valve stems. The high-pressure turbine shaft seals must accommodate a range of turbine shell pressure from full vacuum to approximately 1.2 MPaA (174 psia). The intermediate pressure turbine shaft seals must accommodate a range of turbine shell pressure from full vacuum to approximately 0.5 MPaA (72.52 psia). The low-pressure turbine shaft seals operate against a vacuum at all times. The gland seal outer portion steam/air mixture is exhausted to the gland steam condenser via the seal vent annulus (i.e., end glands), which is maintained at a slight vacuum. The radioactive content of the sealing steam, which eventually exhausts to the plant vent and the atmosphere (Section 11.3), makes a negligible contribution to overall plant radiation release. In addition, the auxiliary steam system is designed to provide a 100% backup to the

normal gland seal process steam supply. A full capacity gland steam condenser is provided and equipped with two 100% capacity blowers.

10A.4.3.4 Tests and Inspections

Same as Reference Design.

10A.4.3.5 Instrumentation Application

10A.4.3.5.1 Gland Steam Condenser Exhausters

Same as Reference Design.

10A.4.3.5.2 Sealing Steam Header

Same as Reference Design.

10A.4.3.5.3 Gland Steam Evaporator

A Gland Steam Evaporator is not considered in the Alternative Design.

10A.4.4 Turbine Bypass System

Same as Reference Design.

10A.4.4.1 Design Bases

Same as Reference Design.

10A.4.4.2 Description

10A.4.4.2.1 General Description

To be clarified in COL phase.

10A.4.4.2.2 Component Description

To be clarified in COL phase.

10A.4.4.2.3 System Operation

To be clarified in COL phase.

10A.4.4.3 Evaluation

Same as Reference Design.

10A.4.4.4 Inspection and Testing Requirements

Same as Reference Design.

10A.4.4.5 Instrumentation Applications

Same as Reference Design.

10A.4.5 Circulating Water System

Same as the Reference Design except in the following paragraph:

1st paragraph

The Circulating Water System (CIRC) provides cooling water for removal of the power cycle waste heat from the main condenser and transfers this heat to the Normal Power Heat Sink.

10A.4.5.1 Design Bases

Same as Reference Design.

10A.4.5.2 Description

10A.4.5.2.1 General Description

Same as the Reference Design except in the following paragraphs:

4th paragraph

The pumps are arranged in parallel and discharge into a common header. The discharge of each pump is fitted with a butterfly valve. This arrangement permits isolation and maintenance of any one pump while the others remain in operation.

5th paragraph

The CIRC and condenser is designed to permit isolation of each tube bundle to permit repair of leaks and cleaning of water boxes while operating at reduced power.

7th paragraph

The CIRC flow is measured and available to the plant computer system for performance monitoring.

10A.4.5.2.2 Component Description

Same as Reference Design.

10A.4.5.2.3 System Operation

Same as the Reference Design except in the following paragraphs:

2nd paragraph

The circulating water pumps are tripped and the pump and condenser isolation valves are closed in the event of a system isolation signal from the condenser pit high-high level switches. A condenser pit high level alarm is provided in the control room. The pit water level trip is set high enough to prevent inadvertent plant trips from unrelated failures, such as a sump overflow.

1st sentence of 3rd paragraph

Draining of any condenser water box is initiated by closing the associated condenser isolation valves and opening the drain connection and water box vent valve.

10A.4.5.3 Evaluation

Same as Reference Design.

10A.4.5.4 Tests and Inspections

Same as Reference Design.

10A.4.5.5 Instrumentation Applications

Same as the Reference Design except in the following paragraphs:

5th paragraph

Monitoring the performance of the Circulating Water System is accomplished by differential pressure transducers across each half of the condenser with remote differential pressure indicators located in the main control room. Temperature signals from the supply and discharge sides of the condenser and total CIRC flow are transmitted to the plant computer for recording, display and condenser performance calculations.

10A.4.5.6 Flood Protection

A circulating water system pipe, waterbox, or expansion joint failure, if not detected and isolated, would cause internal Turbine Building flooding up to slightly over grade level, with excess flood waters potentially spilling over on site. If a failure occurred within the condensate system (condenser shell side), the resulting flood level would be less than grade level due to the relatively small hotwell water inventory relative to the condenser pit capacity. In either event, the flooding of the Turbine Building would not affect the limited safety-related equipment in that building, because such equipment located inside the Turbine Building and all plant safety-related facilities are protected against site surface water intrusion.

10A.4.5.7 Portions of the CIRC Outside of Scope of ESBWR Standard Plant

Same as Reference Design.

10A.4.5.7.1 Safety (10 CFR 50.2) Design Bases (Interface Requirements)

Same as Reference Design.

10A.4.5.7.2 Non-Safety Power Generation Design Bases (Interface Requirements)

Same as Reference Design.

10A.4.5.8 Normal Power Heat Sink (Conceptual Design)

The power Cycle Heat Sink is outside the ESBWR Standard Plant scope.

One of the conceptual designs for the ESBWR Power Cycle Heat Sink utilizes a direct once-through cooling system. Water filtration and circulation, and chemical control are all part of the Circulating Water System.

10A.4.6 Condensate Purification System

Same as Reference Design.

10A.4.6.1 Design Bases

Same as Reference Design.

10A.4.6.2 System Description

10A.4.6.2.1 General Description

Same as Reference Design.

10A.4.6.2.2 Component Description

Same as Reference Design.

10A.4.6.2.3 System Operation

Same as Reference Design.

10A.4.6.3 Evaluation

Same as Reference Design.

10A.4.6.4 Tests and Inspections

Same as Reference Design.

10A.4.6.5 Instrumentation Applications

Same as Reference Design.

10A.4.7 Condensate and Feedwater System

Same as Reference Design.

10A.4.7.1 Design Bases

Same as the Reference Design except in following paragraphs:

(1) The CFS is designed to supply up to 115% of the rated FW flow demand during steady state power operation and for at least 10 seconds after generator step load reduction or turbine trip, and up to 75% of the rated flow demand thereafter.

(2) The CFS is designed to supply at least 135% of rated FW flow for reactor transients.

(3) The CFS is designed to heat up the reactor FW to 220°C during power operation and to lower temperatures during part load operation.

10A.4.7.2 Description

10A.4.7.2.1 General Description

Same as the Reference Design except in following paragraph:

2nd paragraph

The CFS consists of four 33-50% capacity condensate pumps (three normally operating and one on automatic standby), four normally operated 45% capacity reactor FW pumps, four stages of

low-pressure FW heaters, one FW deaerator storage tank and two stages of high-pressure FW heaters, piping, valves, and instrumentation. The condensate pumps take suction from the condenser hotwell and discharge the deaerated condensate into one common header, which feeds the condensate filter/demineralizers. Downstream of the condensate demineralizers, the condensate is taken by a single header and flows in parallel through five auxiliary condenser/coolers, (one gland steam exhauster condenser and two sets of SJAE condensers and offgas recombiner condenser (coolers). The condensate then flows through the condensate flow regulating station and branches into three parallel strings of low-pressure No. 1 & 2 FW heaters followed by two strings of low pressure No. 3 & 4 FW heaters with separate drain coolers. The strings join together at a common header, which is routed to the FW deaerator storage tank.

The following paragraph of the Reference Design is not included in the Alternative Design (5th paragraph):

A bypass is provided around the FW tank and reactor FW pumps to permit supplying FW to the reactor during early startup without operating the FW pumps, using only the condensate pumps. During startups, a low flow control valve with flow supplied by either the condensate pumps or via pre-selected (two out of four) FW pumps operating at their minimum fixed speed control the RPV level.

10A.4.7.2.2 Component Description

Same as the Reference Design except in following paragraphs:

4th paragraph

Low-pressure closed Feedwater Heaters – Three duplex heaters are provided in each condenser neck. The heaters have condensing zones only and have short extraction steam lines without any extraction steam non-return valve. The heaters drain to the main condenser. Two parallel and independent strings of the two highest pressure FW heaters are provided on the condensate circuit. These heaters have integral drain coolers, and the drains are cascaded to the lower stage heaters of the same string and then drain heat is recovered in a drain cooler in the same string. The heater shells are either carbon steel or low alloy ferritic steel, and the tubes are stainless steel. Each low-pressure FW heater string has an upstream and downstream isolation valve which closes on detection of high level in any one of the low-pressure heaters in the string.

5th paragraph

The deaerator is of a simple and compact, direct-contact type in which heating of the reactor FW and deaeration are achieved by spray devices located within the storage tank.

7th paragraph

The startup and operating vents from the steam side of the FW heaters are piped to the main condenser except for the highest pressure heater operating vents which discharge to the FW deaerator storage tank which, in turn, vents to the condenser. Discharges from shell relief valves on the steam side of the FW heaters are piped to the main condenser.

10A.4.7.2.3 System Operation

Same as Reference Design.

10A.4.7.3 Evaluation

Same as Reference Design

10A.4.7.4 Tests and Inspections

10A.4.7.4.1 Preservice Testing

Same as Reference Design

10A.4.7.4.2 Inservice Inspections

Same as Reference Design

10A.4.7.5 Instrumentation Applications

Same as the Reference Design except in following paragraphs:

2nd paragraph

Pump flow is measured on the pump inlet line and the pump minimum flow lines, and flow controls provide automatic pump recirculation flow for each reactor FW pump. Automatic and redundant controls also regulate the condensate flow through the auxiliary condensers (offgas recombiner condenser/coolers, gland steam condenser, and SJAE condensers) and maintains condensate pump minimum flow. Measurements of pump suction and discharge pressures are provided for all pumps in the system. Main FW pump suction pressure, discharge pressure and flow are indicated in the main control room.

3rd paragraph

The high-pressure FW heater isolation valves are interlocked such that, if a string of heaters were to be removed from service, the extraction non-return valves and isolation valves for those heaters would automatically close and the heater string bypass valve open. The low-pressure FW heater isolation valves are interlocked such that, if a string of heaters were removed from service, the extractions to the affected heaters which are equipped with non-return valves would automatically close.

10A.4.8 Steam Generator Blowdown System (PWR)

Same as Reference Design

10A.4.9 Auxiliary Feedwater System (PWR)

Same as Reference Design

10A.4.10 COL Information

10A.4.10.1 Radiological Analysis of the TGSS Effluents

The COL applicant shall perform a radiological analysis of the TGSS effluents based on conservative site-specific parameters. From this analysis, the applicant shall determine the various actions to be taken if and when the TGSS effluent radiation monitor detects preset levels of effluent contaminations, including the level at which the TGSS steam supply is switched over to auxiliary steam (Subsection 10.4.3.5.1.3).

Table 10A.4-1

Main Condenser Data

Same as the Reference Design except in the following values

Parameter	Value
Condenser Type	Transversal, single shell, Deaerating
Design duty, kW-total	2,895,000
Shell pressures w / 27 °C Circ. Water, MPaA (psia)	7.2×10^{-3} (1.044272)
Circulating water flow rate, m^3/h (gpm)	258,480 (1,138,000)
Tube side temperature rise-total, °C (°F)	9.7 (49.46)
Shell design pressure range, MPaA (psia)	
Hotwell storage capacity-total, L (gal)	
Channel design pressure range, MPaA (psia)	
Surface Area, cm^2 (in^2)	116.62×10^7 (180.761×10^6)
Number of tube passes per shell	1
Applicable codes and standards	
Alarms and Trips:	
High condenser pressure turbine alarm, MPaA (psia).	0.019 (2.76)
High condenser pressure turbine trip, MPaA (psia).	0.0245 (3.55)
Bypass valve closure, MPaA (psia).	
Main steam isolation valve closure, MPaA (psia).	

Table 10A.4-2

Condenser Air Removal system

Same as Reference Design

Table 10A.4-3
Circulating Water System

To be provided in COL phase.

Table 10A.4-4

Condensate Purification System

Same as Reference Design

Table 10A.4-5

Condensate and Feedwater System Data

To be provided in COL phase.

Table 10A.4-6

Condensate and Feedwater System Component Failure Analysis

Same as the Reference Design except in the following values

Component	Failure Effect on Train	Failure Effect on System	Failure Effect on RCS
Condensate pump	None. Condensate pumps are interconnected	Operation continues at full capacity, using parallel pumps (condensate pump capacity is 33-50%).	None

Figure 10A.4-1. Circulating Water System

To be provided in COL phase.

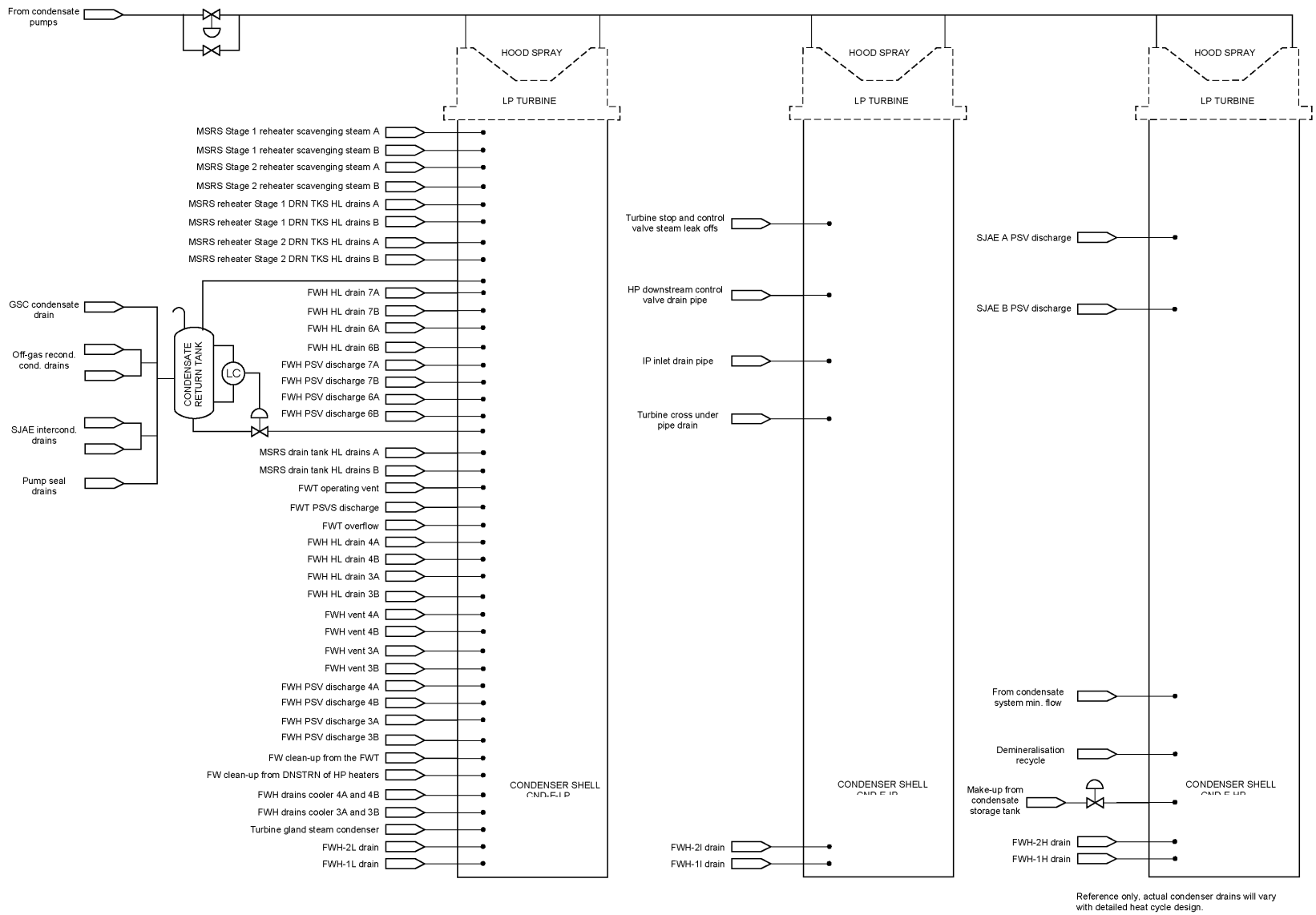

Figure 10A.4-2 Condensate System
Page 1 of 2

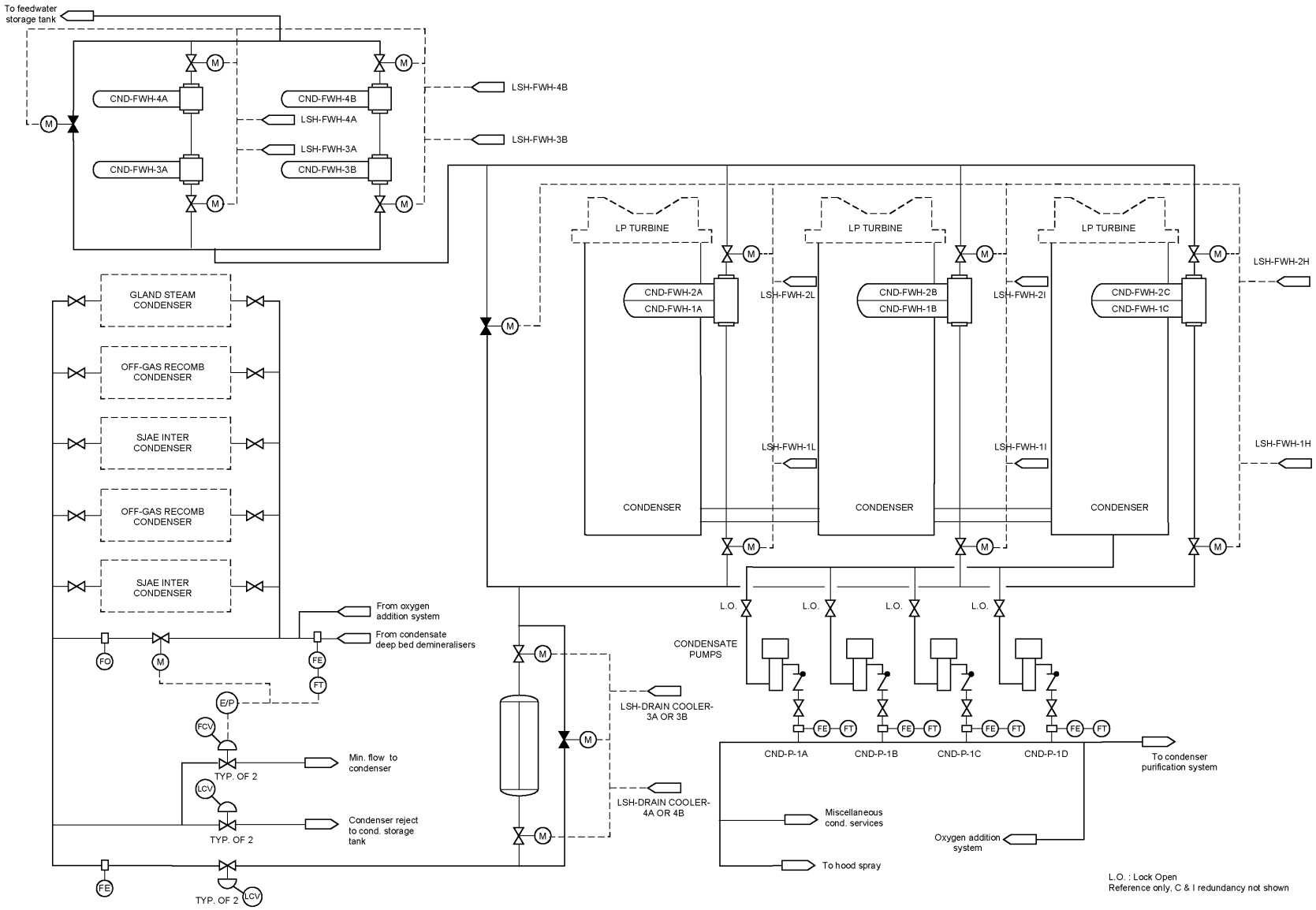

Figure 10A.4-2. Condensate System (Continued) Page 2 of 2

Figure 10A.4-3. Condenser Air Removal System

Same as Reference Design

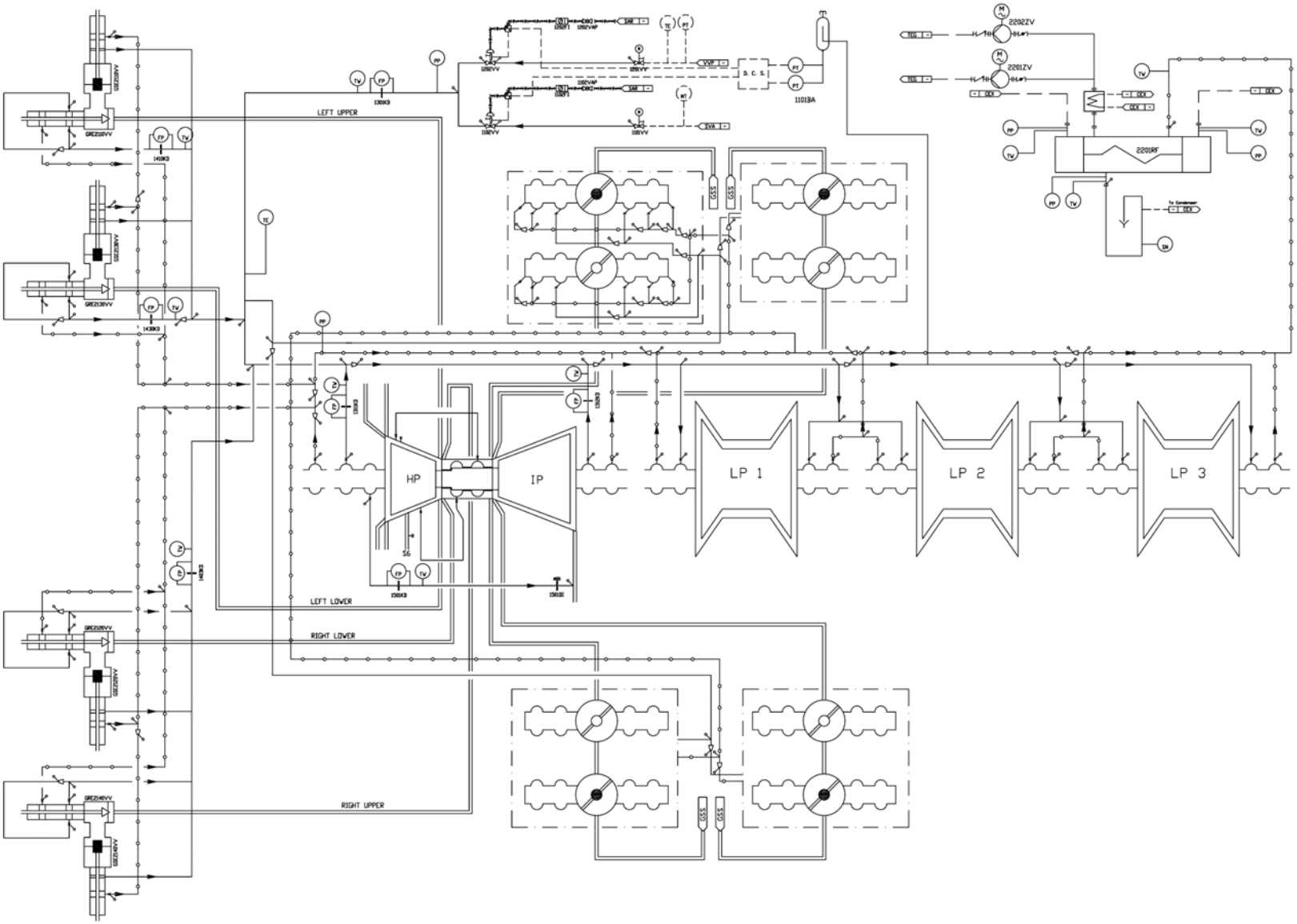

Figure 10A.4-4. Turbine Gland Seal System

Figure 10A.4-5. Not Used

Figure 10A.4-6. Signal Flow Chart for Turbine Bypass Control Unit

To be provided in COL phase.

Figure 10A.4-7. Condensate Purification System

Same as Reference Design

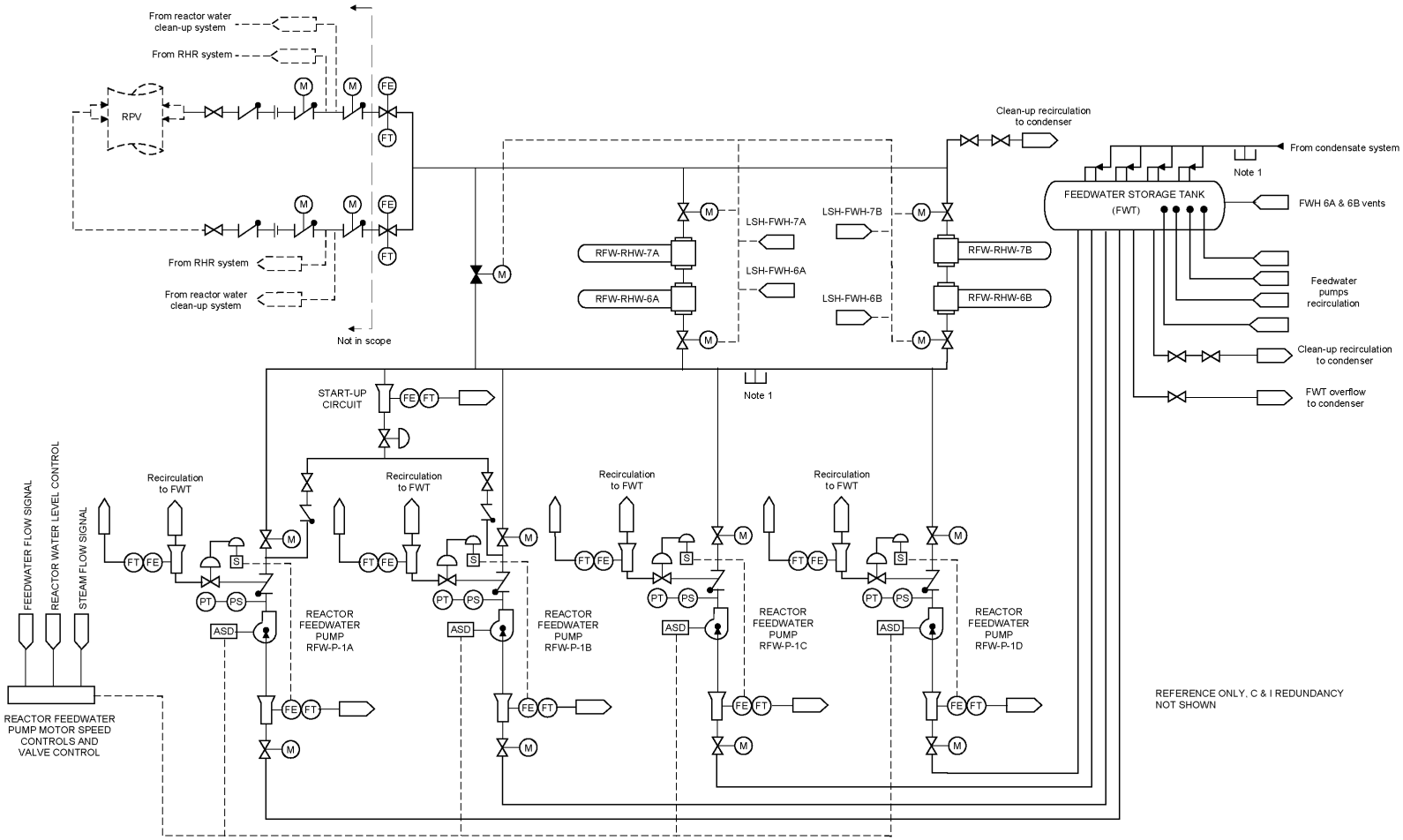

Note 1 : These connections are provided for installation of a zinc injection system (subsection 9.3-11).

Figure 10A.4-8. Feedwater System

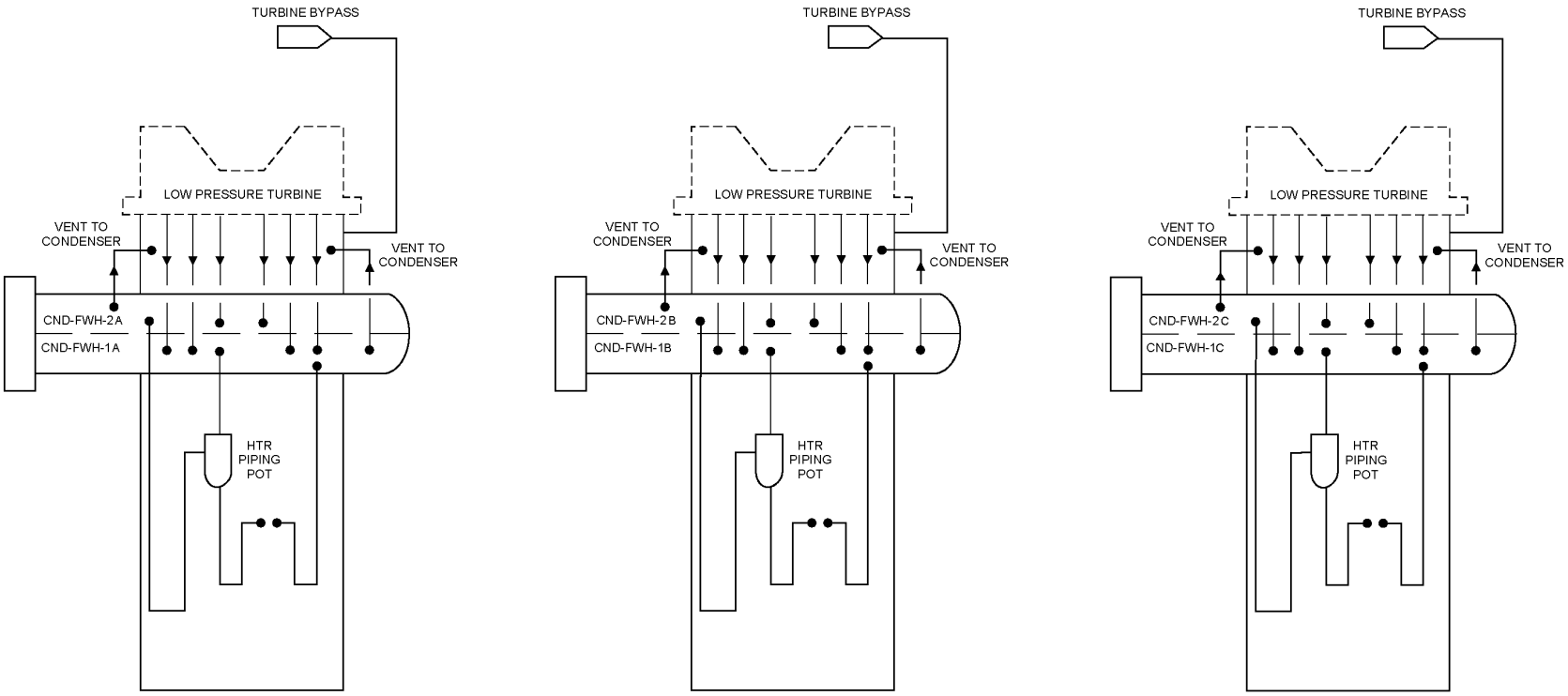

Figure 10A.4-9. LP Extraction Steam Drains and Vent Systems

Page 1 of 2

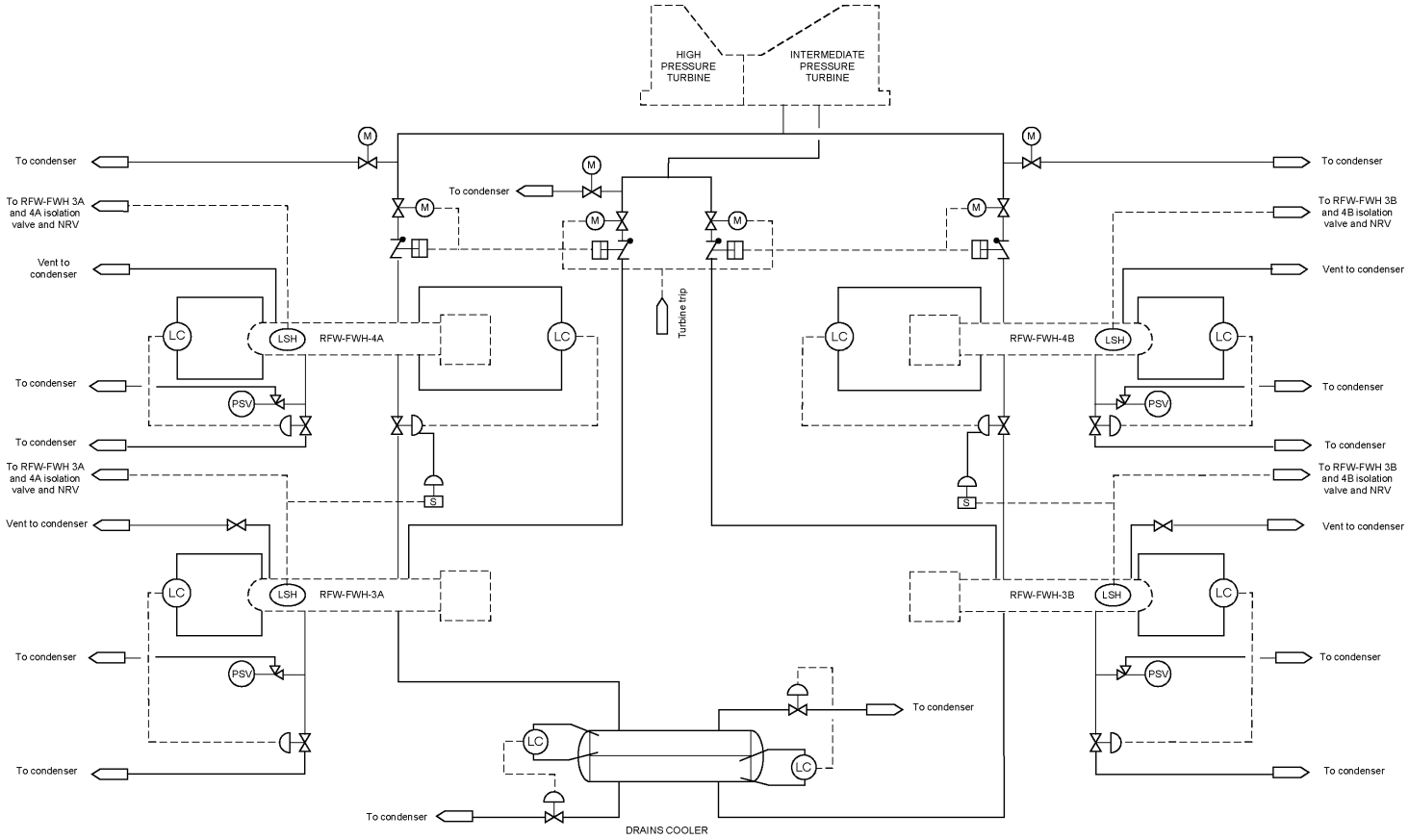

Figure 10A.4-9. LP Extraction Steam Drains and Vent Systems (Continued)

Page 2 of 2

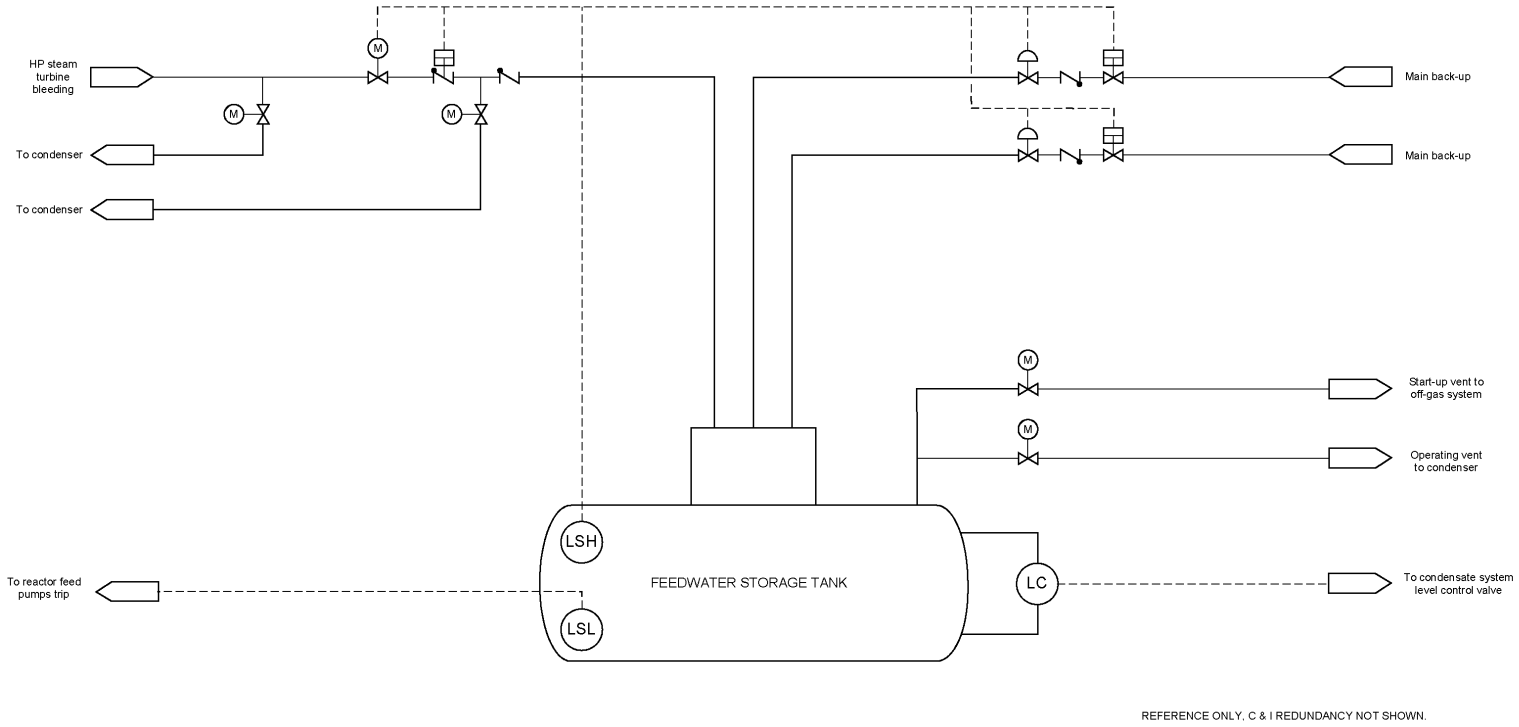

Figure 10A.4-10. HP Extraction Steam Drains and Vent Systems

Page 1 of 2

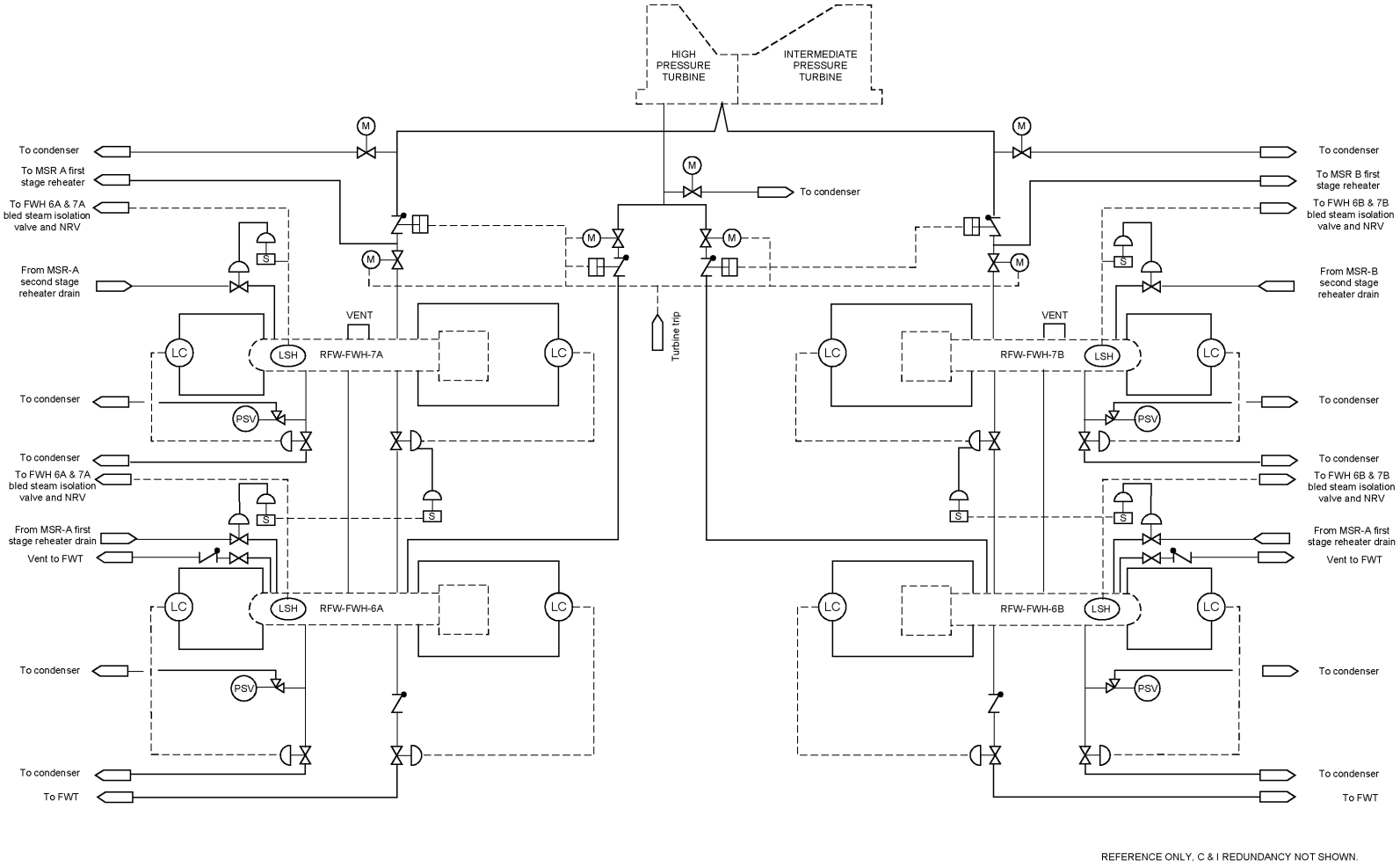

Figure 10A.4-10. HP Extraction Steam Drains and Vent Systems (Continued)

Page 2 of 2

Figure 10A.4-11. Turbine Bypass System

To be provided in COL phase.

10A.5 TURBINE BUILDING SIMPLIFIED GENERAL ARRANGEMENT DRAWINGS

Figure 10A.5-1. Turbine Building Plan View, Elevation - 1400

Figure 10A.5-2. Turbine Building Plan View, Elevation - 4650

Figure 10A.5-3. Turbine Building Plan View, Elevation - 12000

Figure 10A.5-4. Turbine Building Plan View, Elevation - 22000

Figure 10A.5-5. Turbine Building Plan View, Elevation - 27000

Figure 10A.5-6. Turbine Building Longitudinal Section in front of Turbine Generator Set