Draft Submittal

VOGTLE MAY 2005 EXAM
50-424, 425/2005-301

MAY 17 - 25, 2005
MAY 27, 2005 (WRITTEN)

1. Reactor Operator Operator Written Exam

VOGTLE

INITIAL LICENSE EXAM

2005-301

REACTOR OPERATOR QUESTIONS

Exam Date: May 2005

Draft

QUESTIONS REPORT
for Voglte 2005-301 Draft

1. 001K2.01 001

Which ONE of the following correctly states the order of components through which 480 VAC to 260 VAC power flows to the Control Rod Drive Mechanisms?

A. Motor Starting Breakers, then Motor Generator Sets, then Power Cabinets, then Reactor Trip Breakers

B. Power Cabinets, then Motor Starting Breakers, then Motor Generator Sets, then Reactor Trip Breakers

C. Motor Starting Breakers, then Motor Generator Sets, then Reactor Trip Breakers, then Power Cabinets

D. Motor Generator Sets, then Motor Starting Breakers, then Reactor Trip Breakers, then Power Cabinets

K/A
001 Control Rod Drive
K2.01 Knowledge of bus power supplies to the following: One-line diagram of power supply to M/G sets.

K/A MATCH ANALYSIS
Question tests knowledge of the power supplies to the M/G Sets at the memory level.

ANSWER / DISTRACTOR ANALYSIS
A. Incorrect. Plausible because all parts of the correct answer are listed, but in an incorrect order.
B. Incorrect. Plausible because all parts of the correct answer are listed, but in an incorrect order.
C. Correct. See Reference 1, Page 9.
D. Incorrect. Plausible because all parts of the correct answer are listed, but in an incorrect order. This choice would be correct if "Motor Breakers" were replaced with "Generator Breakers".

REFERENCES
1. Vogtle Lesson Plan, LO-LP-27101, Rod Control System.
2. Vogtle Exam Bank Question, LO-LP-27101-03-02

MCS Time: 1 Points: 1.00 Version: 0 1 2 3 4 5 6 7 8 9
Answer: C D B C B D C C A B Scramble Range: A - D

Tier:	2	Group:	2
Key Word:	CONTROL ROD DRIVE	Cog Level:	MEM 3.5
Source:	M	Exam:	VG05301
Test:	R	Author/Reviewer:	MAB/RSB

QUESTIONS REPORT
for Voglte 2005-301 Draft

1. 001K2.01 001

Which ONE of the following correctly states the order of components through which 480 VAC to 260 VAC power flows to the Control Rod Drive Mechanisms?

A. Motor Starting Breakers, then Motor Generator Sets, then Power Cabinets, then Reactor Trip Breakers

B. Power Cabinets, then Motor Starting Breakers, then Motor Generator Sets, then Reactor Trip Breakers

C. Motor Starting Breakers, then Motor Generator Sets, then Reactor Trip Breakers, then Power Cabinets

D. Motor Generator Sets, then Motor Starting Breakers, then Reactor Trip Breakers, then Power Cabinets

K/A
001 Control Rod Drive
K2.01 Knowledge of bus power supplies to the following: One-line diagram of power supply to M/G sets.

K/A MATCH ANALYSIS
Question tests knowledge of the power supplies to the M/G Sets at the memory level.

ANSWER / DISTRACTOR ANALYSIS
A. Incorrect. Plausible because all parts of the correct answer are listed, but in an incorrect order.
B. Incorrect. Plausible because all parts of the correct answer are listed, but in an incorrect order.
C. Correct. See Reference 1, Page 9.
D. Incorrect. Plausible because all parts of the correct answer are listed, but in an incorrect order. This choice would be correct if "Motor Breakers" were replaced with "Generator Breakers".

REFERENCES
1. Vogtle Lesson Plan, LO-LP-27101, Rod Control System.
2. Vogtle Exam Bank Question, LO-LP-27101-03-02

MCS	Time:	1	Points:	1.00	Version:	0 1 2 3 4 5 6 7 8 9	
					Answer:	C D B C B D C C A B	Scramble Range: A - D
Tier:		2			Group:	2	
Key Word:		CONTROL ROD DRIVE			Cog Level:	MEM 3.5	
Source:		M			Exam:	VG05301	
Test:		R			Author/Reviewer:	MAB/RSB	

QUESTIONS REPORT
for Voglte 2005-301 Draft

1. 001K2.01 001

Which ONE of the following correctly states the order of components through which 480 VAC to 260 VAC power flows to the Control Rod Drive Mechanisms?

A. Motor Breakers, then Motor Generator Sets, then Power Cabinets, then Reactor Trip Breakers

B. Power Cabinets, then Motor Breakers, then Motor Generator Sets, then Reactor Trip Breakers

C. Motor Breakers, then Motor Generator Sets, then Reactor Trip Breakers, then Power Cabinets

D. Motor Generator Sets, then Motor Breakers, then Reactor Trip Breakers, then Power Cabinets

K/A
001 Control Rod Drive
K2.01 Knowledge of bus power supplies to the following: One-line diagram of power supply to M/G sets.

K/A MATCH ANALYSIS
Question tests knowledge of the power supplies to the M/G Sets at the memory level.

ANSWER / DISTRACTOR ANALYSIS
A. Incorrect. Plausible because all parts of the correct answer are listed, but in an incorrect order.
B. Incorrect. Plausible because all parts of the correct answer are listed, but in an incorrect order.
C. Correct. See Reference 1, Page 9.
D. Incorrect. Plausible because all parts of the correct answer are listed, but in an incorrect order. This choice would be correct if "Motor Breakers" were replaced with "Generator Breakers".

REFERENCES
1. Vogtle Lesson Plan, LO-LP-27101, Rod Control System.
2. Vogtle Exam Bank Question, LO-LP-27101-03-02

MCS	Time:	1	Points:	1.00	Version:	0 1 2 3 4 5 6 7 8 9	
					Answer:	C D B C B D C C A B	Scramble Range: A - D

Tier:	2	Group:	2
Key Word:	CONTROL ROD DRIVE	Cog Level:	MEM 3.5
Source:	M	Exam:	VG05301
Test:	R	Author/Reviewer:	MAB/RSB

The following diagram shows the power and control signals pass between the components:

Basic Power and Signal Block Diagram

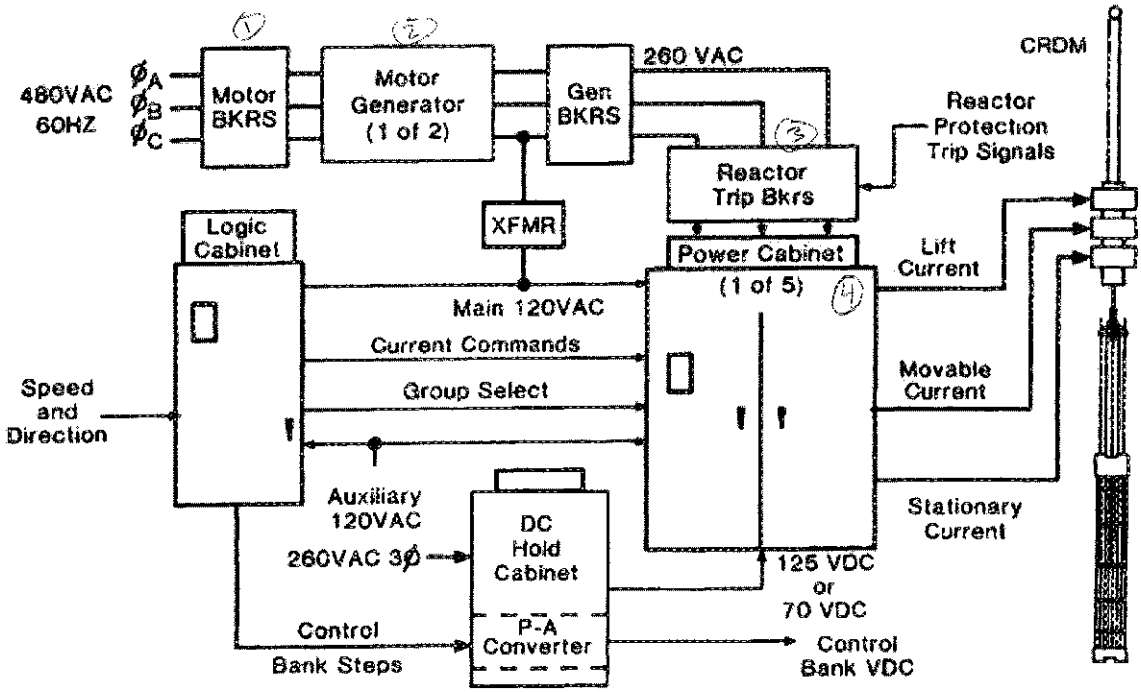

The major components of the Rod Control System are as follows.

a. Control Panel

b. T-avg Control Unit

c. Rod Conrol Cabinets
- Logic Cabinet
- Power Cabinets
- DC Hold Supply Cabinet and Pulse to Analog converter

d. L-106A Control Rod Drive Mechanisms

e. Motor-Generator Sets and Reactor Trip Breakers

T2/G2 001 K2.01

LO-LP-27101-03-02

Select the following that correctly lists the order of components through which 260 VAC power flows to the Control Rod Drive Mechanisms.

A. Motor Generator (MG) sets, power cabinets, Reactor Trip Beakers (RTB)

B. Power cabinets, MG sets, RTB's

C. MG sets, RTB's, power cabinets

D. Solid State Protection System (SSPS) Undervoltage driver output card, RTB's, power cabinets

LO-LP-27101-03
Draw and label a one-line diagram of the rod drive power supply from the power supply to the MG sets to the power cabinets including all major components and breakers.

001 K2.01 Control Rod Drive

Knowledge of the bus power supplies to the following: One-line diagram of power supply to M/G sets.

2. 002G2.4.31 001

ALB08-F03, RCP FRAME HI VIBRATION, is in alarm with both RCP #1 frame vibration channels reading 10 mils.

Which ONE of the following correctly describes the required actions?

A. The alarm is valid, secure RCP #1.

B. Continue operation of RCP #1 and frequently monitor vibrations.

C. The alarm is invalid; therefore, RCP #1 may continue to run without any increased monitoring of vibrations.

D. Secure RCP #1 ONLY if vibration rate of increase exceeds 0.2 mils per hour.

K/A
002 Reactor Coolant
G2.4.31 Knowledge of annunciators, alarms, and indications, and use of the response instructions.

K/A MATCH ANALYSIS
Question tests a memory item wrt the vibration level at which an RCP must be secured. The guidance exists in the ARPs.

ANSWER / DISTRACTOR ANALYSIS
A. Correct. ALB08-F03 states that RCP must be secured when 5 mils Frame Vibe is exceeded. The subsequent actions has the operator attempt a reset of the alarm, but this is not required knowledge to answer the question. The question requires only one memory item in order to get the correct answer - RCP trip criteria.
B. Incorrect. RCP must be tripped. Plausible because this would be the correct answer if a RCP FRAME VIBRATION ALERT alarm was in.
C. Incorrect. Alarm is valid as evidenced by both channels indicating the alarm. Plausible because the Shaft Vibration alarms are 15 and 20 mils, therefore the applicant may get them confused.
D. Incorrect. RCP must be secured even if there is no rate of increase and the question clearly states ONLY if there is a rate of increase. Plausible because this is the guidance given in RCP FRAME VIBRATION ALERT alarm.

REFERENCES
1. ALB08-E03, RCP FRAME VIBRATION ALERT, Rev. 13.1, 01/01/2004.
2. ALB08-E04, RCP SHAFT VIBRATION ALERT, Rev. 13.1, 01/01/2004.
3. ALB08-F03, RCP FRAME HI VIBRATION, Rev. 13.1, 01/01/2004.
4. ALB08-F04, RCP SHAFT HI VIBRATION, Rev. 13.1, 01/01/2004.

QUESTIONS REPORT

for Voglte 2005-301 Draft

MCS Time: 1 Points: 1.00 Version: 0 1 2 3 4 5 6 7 8 9

Answer: A C B C A C B D A C Scramble Range: A - D

Tier:	2	Group:	2
Key Word:	RCP VIBRATIONS	Cog Level:	MEM 3.3
Source:	N	Exam:	VG05301
Test:	R	Author/Reviewer:	MAB/RSB

2. 002G2.4.31 001

ALB08-F03, RCP FRAME HI VIBRATION, is in alarm with both RCP #1 frame vibration channels reading 10 mils.

Which ONE of the following correctly describes the required actions?

A✓ The alarm is valid, secure RCP #1.

B. Continue operation of RCP #1 and frequently monitor vibrations.

C. The alarm is invalid; therefore, RCP #1 may continue to run without any increased monitoring of vibrations.

D. Secure RCP #1 ONLY if vibration rate of increase exceeds 0.2 mils per hour.

K/A
002 Reactor Coolant
G2.4.31 Knowledge of annunciators, alarms, and indications, and use of the response instructions.

K/A MATCH ANALYSIS
Question tests a memory item wrt the vibration level at which an RCP must be secured. The guidance exists in the ARPs.

ANSWER / DISTRACTOR ANALYSIS
A. Correct. ALB08-F03 states that RCP must be secured when 5 mils Frame Vibe is exceeded. The subsequent actions has the operator attempt a reset of the alarm, but this is not required knowledge to answer the question. The question requires only one memory item in order to get the correct answer - RCP trip criteria.
B. Incorrect. RCP must be tripped. Plausible because this would be the correct answer if a RCP FRAME VIBRATION ALERT alarm was in.
C. Incorrect. Alarm is valid as evidenced by both channels indicating the alarm. Plausible because the Shaft Vibration alarms are 15 and 20 mils, therefore the applicant may get them confused.
D. Incorrect. RCP must be secured even if there is no rate of increase and the question clearly states ONLY if there is a rate of increase. Plausible because this is the guidance given in RCP FRAME VIBRATION ALERT alarm.

REFERENCES
1. ALB08-E03, RCP FRAME VIBRATION ALERT, Rev. 13.1, 01/01/2004.
2. ALB08-E04, RCP SHAFT VIBRATION ALERT, Rev. 13.1, 01/01/2004.
3. ALB08-F03, RCP FRAME HI VIBRATION, Rev. 13.1, 01/01/2004.
4. ALB08-F04, RCP SHAFT HI VIBRATION, Rev. 13.1, 01/01/2004.

QUESTIONS REPORT

for Vogite 2005-301 Draft

MCS Time: 1 Points: 1.00 Version: 0 1 2 3 4 5 6 7 8 9

Answer: A C B C A C B D A C Scramble Range: A - D

Tier:	2	Group:	2
Key Word:	RCP VIBRATIONS	Cog Level:	MEM 3.3
Source:	N	Exam:	VG05301
Test:	R	Author/Reviewer:	MAB/RSB

2. 002G2.4.31 001

ALB08-F03, RCP FRAME HI VIBRATION, is in alarm with both ~~1A~~ RCP #1 frame vibration channels reading 10 mils.

Which ONE of the following correctly describes the required actions?

A. Attempt to reset the alarm using the COMMON RESET toggle and secure the 1A RCP if the alarm will not clear.

B. Continue operation of the 1A RCP and frequently monitor vibrations.

C. The alarm is invalid; therefore, the 1A RCP may continue to run without any increased monitoring of vibrations.

D. Secure the RCP ONLY if vibration rate of increase exceeds 0.2 mils per hour.

K/A
002 Reactor Coolant
G2.4.31 Knowledge of annunciators, alarms, and indications, and use of the response instructions.

K/A MATCH ANALYSIS
Question tests a memory item wrt the vibration level at which an RCP must be secured. The guidance exists in the ARPs.

ANSWER / DISTRACTOR ANALYSIS
A. Correct. ALB08-F03 states that RCP must be secured when 5 mils Frame Vibe is exceeded. The subsequent actions has the operator attempt a reset of the alarm, but this is not required knowledge to answer the question. The question requires only one memory item in order to get the correct answer - RCP trip criteria.
B. Incorrect. RCP must be tripped. Plausible because this would be the correct answer if a RCP FRAME VIBRATION ALERT alarm was in.
C. Incorrect. Alarm is valid as evidenced by both channels indicating the alarm. Plausible because the Shaft Vibration alarms are 15 and 20 mils, therefore the applicant may get them confused.
D. Incorrect. RCP must be secured even if there is no rate of increase and the question clearly states ONLY if there is a rate of increase. Plausible because this is the guidance given in RCP FRAME VIBRATION ALERT alarm.

REFERENCES
1. ALB08-E03, RCP FRAME VIBRATION ALERT, Rev. 13.1, 01/01/2004.
2. ALB08-E04, RCP SHAFT VIBRATION ALERT, Rev. 13.1, 01/01/2004.
3. ALB08-F03, RCP FRAME HI VIBRATION, Rev. 13.1, 01/01/2004.
4. ALB08-F04, RCP SHAFT HI VIBRATION, Rev. 13.1, 01/01/2004.

MCS	Time:	1	Points:	1.00	Version:	0 1 2 3 4 5 6 7 8 9	
					Answer:	A C B C A C B D A C	Scramble Range: A - D

Tier:	2	Group:	2
Key Word:	RCP VIBRATIONS	Cog Level:	MEM 3.3
Source:	N	Exam:	VG05301
Test:	R	Author/Reviewer:	MAB/RSB

WINDOW E03

ORIGIN	SETPOINT	
1-XE-0471A,B 1-XE-0472A,B 1-XE-0473A,B 1-XE-0474A,B	3 MILS	RCP FRAME VIBRATION ALERT

Deleted: C,D,E
Deleted: C,D,E
Deleted: C,D,E
Deleted: C,D,E

1.0 PROBABLE CAUSE

1. Pump Bearing failure.
2. Pump Impeller - shaft assembly out-of-balance.
3. Misalignment between Pump Shaft and Motor Shaft.
4. Loose connections or disconnected vibration probes.
5. Vibration Monitoring Panel power failure.
6. Local COMMON RESET not cleared.

2.0 AUTOMATIC ACTIONS

NONE

3.0 INITIAL OPERATOR ACTIONS

NONE

WINDOW E03
(Continued)

NOTE

The Vibration Monitoring Panel displays auctioneered high vibration levels.

4.0 SUBSEQUENT OPERATOR ACTIONS

1. DISPATCH an operator to the Vibration Monitoring Panel 1-1201-P5-VMP to:

   a. IDENTIFY the Reactor Coolant Pump (RCP) causing the alarm.

   b. CHECK both vibration channels and alarm setpoints for shaft and frame of each RCP (32 points in all) to verify no obvious vibration monitoring equipment problems exist.

   c. ATTEMPT to reset alarm using COMMON RESET toggle switch.

2. CONTINUE operation of affected RCP and frequently MONITOR vibration.

3. REFER to 13003-1, "Reactor Coolant Pump Operation" and SHUT DOWN the affected RCP if rate of increase in vibration exceeds .2 MILS/hour.

Supports Distractor "C"

Supports Distractor "D"

5.0 COMPENSATORY OPERATOR ACTIONS

NONE

END OF SUB-PROCEDURE

REFERENCES: 1X4DB113, 1X6AB09-119, 1X3D-RD-M01A, 1X3D-CD-M10A, 1X6AB09-88, CX5DT101-176A, CX5DT101-176B

WINDOW E04

ORIGIN	SETPOINT	RCP SHAFT VIBRATION ALERT
1-XE-0471C,D	15 MILS	
1-XE-0472C,D		
1-XE-0473C,D		
1-XE-0474C,D		

Deleted: A,B
Deleted: A,B
Deleted: A,B
Deleted: A,B

1.0 PROBABLE CAUSE

1. RCS operating temperature below 500°F.
2. Pump Bearing failure.
3. Pump Impeller - shaft assembly out-of-balance.
4. Misalignment between Pump Shaft and Motor Shaft.
5. Loose connections or disconnected vibration probes.
6. Vibration Monitoring Panel power failure.
7. Local COMMON RESET not cleared.

2.0 AUTOMATIC ACTIONS

NONE

3.0 INITIAL OPERATOR ACTIONS

NONE

WINDOW F03

ORIGIN	SETPOINT	RCP FRAME HI VIBRATION
1-XE-0471A,B	5 MILS	
1-XE-0472A,B		
1-XE-0473A,B		
1-XE-0474A,B		

Deleted: C,D,E
Deleted: C,D,E
Deleted: C,D,E
Deleted: C,D,E

1.0 PROBABLE CAUSE

1. Pump Bearing failure.
2. Pump Impeller - shaft assembly out-of-balance.
3. Misalignment between Pump Shaft and Motor Shaft.
4. Loose connections or disconnected vibration probes.
5. Vibration Monitoring Panel power failure.
6. Local COMMON RESET not cleared.

2.0 AUTOMATIC ACTIONS

NONE

WINDOW F03
(Continued)

NOTES

a. Prompt action is required to confirm alarm validity and shut down affected RCP if required.

b. The Vibration Monitoring Panel displays auctioneered high vibration levels.

3.0 INITIAL OPERATOR ACTIONS

1. ATTEMPT to confirm validity of annunciator through related plant parameters.

2. DISPATCH an operator to the Vibration Monitoring Panel 1-1201-P5-VMP to:

   a. IDENTIFY the Reactor Coolant Pump (RCP) causing the alarm.

   b. CHECK both vibration channels and alarm setpoints for shaft and frame of each RCP (32 points in all) to verify no obvious vibration monitoring equipment problems exist.

   c. ATTEMPT to reset alarm using COMMON RESET toggle switch.

3. REFER to 13003-1, "Reactor Coolant Pump Operation" and SHUT DOWN the affected RCP.

4.0 SUBSEQUENT OPERATOR ACTIONS

NONE

5.0 COMPENSATORY OPERATOR ACTIONS

NONE

END OF SUB-PROCEDURE

REFERENCES: 1X4DB113, 1X6AB09-119, 1X3D-BD-M01A, 1X3D-CD-M10A, 1X6AB09-88

WINDOW F04

ORIGIN	SETPOINT	RCP SHAFT HI VIBRATION
1-XE-0471C,D 1-XE-0472C,D 1-XE-0473C,D 1-XE-0474C,D	20 MILS	

Deleted: A,B
Deleted: A,B
Deleted: A,B
Deleted: A,B

1.0 PROBABLE CAUSE

1. RCS operating temperature below 500°F.
2. Pump Bearing failure.
3. Pump Impeller - shaft assembly out-of-balance.
4. Misalignment between Pump Shaft and Motor Shaft.
5. Loose connections or disconnected vibration probes.
6. Vibration Monitoring Panel power failure.
7. Local COMMON RESET not cleared.

2.0 AUTOMATIC ACTIONS

NONE

WINDOW F04
(Continued)

NOTES

a. Prompt action is required to confirm alarm validity and shut down affected RCP if required.

b. The Vibration Monitoring Panel displays auctioneered high vibration levels.

3.0 INITIAL OPERATOR ACTIONS

1. ATTEMPT to confirm validity of annunciator through related plant parameters.

2. DISPATCH an operator to the Vibration Monitoring Panel 1-1201-P5-VMP to:

   a. IDENTIFY the Reactor Coolant Pump (RCP) causing the alarm.

   b. CHECK both vibration channels and alarm setpoints for shaft and frame of each RCP (32 points in all) to verify no obvious vibration monitoring equipment problems exist.

   c. ATTEMPT to reset alarm using COMMON RESET toggle switch.

3. REFER to 13003-1, "Reactor Coolant Pump Operation" and SHUT DOWN the affected RCP.

SUBSEQUENT OPERATOR ACTIONS

NONE

5.0 COMPENSATORY OPERATOR ACTIONS

NONE

END OF SUB-PROCEDURE

REFERENCES: 1X4DB113, 1X6AB09-119, 1X3D-BD-M01A, 1X3D-CD-M10A, 1X6AB09-88

3. 003K5.03 001

Unit 1 reactor power is 6% Rated Thermal Power with all four RCPs running. The following Loop 2 and 3 RCP indications are noted by the Control Room Staff.

Loop 2 RCP: Motor Bearing Temperature = 195 °F
Motor Stator Winding Temperature = 312 °F
Seal Water Inlet Temperature = 224 °F
RCP Shaft Vibration = 14 mils
RCP Frame Vibration = 3 mils

Loop 3 RCP: Motor Bearing Temperature = 175 °F
Motor Stator Winding Temperature = 310 °F
Seal Water Inlet Temperature = 226 °F
RCP Shaft Vibration = 16 mils
RCP Frame Vibration = 4 mils

Based on the above indications, assuming the required operator actions are taken, which ONE of the following describes the response of the affected loop Tave and the reason for the affect on Tave?

A. Loop 2 Tave will initially decrease due to securing Loop 2 RCP.

B. Loop 2 Tave will initially increase due to securing Loop 2 RCP.

C. Loop 3 Tave will initially decrease due to securing Loop 3 RCP.

D. Loop 3 Tave will initially increase due to securing Loop 3 RCP.

K/A
003 Reactor Coolant Pump
K5.03 Knowledge of the operational implications of the following concepts as they apply to the RCPS: Effects of RCP shutdown on Tave, including the reason for the unreliability of Tave in the shutdown loop.

K/A MATCH ANALYSIS
The K/A is matched for the following reasons:
- Knowledge of operational implications of an RCP being tripped is matched by testing the directional trend in Tave when the RCP is initially tripped. The operational implication of tripping an RCP is that Tave initially trends down.
- The reason for the unreliability of Tave is matched because Loop 2 Tave becomes unrepresentative due to the Loop 2 RCP being tripped. Therefore, the Loop 2 Tave indication is unreliable due to the Loop 2 RCP being tripped.

ANSWER / DISTRACTOR ANALYSIS
A. Correct because Loop 2 Tave is required to be tripped (Ref. 2) due to high motor stator winding temperature (> 311°F) and Tave will initially decrease due to reverse flow, which occurs when the Loop 2 RCP is tripped.
B. Incorrect because Loop 2 Tave will not increase due to a reduction in hot leg temperature due to the reverse flow, which occurs when Loop 2 RCP is tripped. Plausible because a misconception could exist where the applicant may believe that the coolant may have a longer transit time through the core in the forward direction, which would cause Thot to increase, thus increasing Tave.
C. Incorrect because Loop 3 RCP is not required to be tripped. Plausible because motor stator winding temperature is close to the value that requires the RCP to be tripped. Also, RCP Shaft vibration is at a level that creates an alarm in the control room, but below the value that requires the pump to be tripped (20 mils).
D. Incorrect because Loop 3 RCP is not required to be tripped. Plausible because motor stator winding temperature is close to the value that requires the RCP to be tripped. Also, RCP Shaft vibration is at a level that creates an alarm in the control room, but below the value that requires the pump to be tripped (20 mils).

REFERENCES
1. V-LO-TX-16001 Reactor Coolant System.doc, Chpt. 16, Sect. B, Pg. 39, Rev. 3.
2. System Operating Procedure 13003-1, Rev. 31, 02/17/2004, Step 2.2.10
3. Vogtle Initial Exam VG02301, Question 003A2.02.

MCS	Time:	1	Points:	1.00	Version:	0 1 2 3 4 5 6 7 8 9	
					Answer:	A A D C D C B C A C	Scramble Range: A - D

Tier:	2	Group:	1
Key Word:	RCP TAVE TAVG	Cog Level:	C/A 3.1
Source:	M	Exam:	VG05301
Test:	R	Author/Reviewer:	MAB/RSB

3. 003K5.03 001

Unit 1 reactor power is 6% Rated Thermal Power with all four RCPs running. The following Loop 2 and 3 RCP indications are noted by the Control Room Staff.

Loop 2 RCP: Motor Bearing Temperature = 195 °F
Motor Stator Winding Temperature = 312 °F
Seal Water Inlet Temperature = 224 °F
RCP Shaft Vibration = 14 mils
RCP Frame Vibration = 3 mils

Loop 3 RCP: Motor Bearing Temperature = 175 °F
Motor Stator Winding Temperature = 310 °F
Seal Water Inlet Temperature = 226 °F
RCP Shaft Vibration = 16 mils
RCP Frame Vibration = 4 mils

Based on the above indications, assuming the required operator actions are taken, which ONE of the following describes the response of the affected loop Tave and the reason for the affect on Tave?

A. Loop 2 Tave will initially decrease due to securing Loop 2 RCP.

B. Loop 2 Tave will initially increase due to securing Loop 2 RCP.

C. Loop 3 Tave will initially decrease due to securing Loop 3 RCP.

D. Loop 3 Tave will initially increase due to securing Loop 3 RCP.

K/A

003 Reactor Coolant Pump

K5.03 Knowledge of the operational implications of the following concepts as they apply to the RCPS: Effects of RCP shutdown on Tave, including the reason for the unreliability of Tave in the shutdown loop.

K/A MATCH ANALYSIS

The K/A is matched for the following reasons:

- Knowledge of operational implications of an RCP being tripped is matched by testing the directional trend in Tave when the RCP is initially tripped. The operational implication of tripping an RCP is that Tave initially trends down.
- The reason for the unreliability of Tave is matched because Loop 2 Tave becomes unrepresentative due to the Loop 2 RCP being tripped. Therefore, the Loop 2 Tave indication is unreliable due to the Loop 2 RCP being tripped.

ANSWER / DISTRACTOR ANALYSIS

A. Correct because Loop 2 Tave is required to be tripped (Ref. 2) due to high motor stator winding temperature (> 311°F) and Tave will initially decrease due to reverse flow, which occurs when the Loop 2 RCP is tripped.

B. Incorrect because Loop 2 Tave will not increase due to a reduction in hot leg temperature due to the reverse flow, which occurs when Loop 2 RCP is tripped. Plausible because a misconception could exist where the applicant may believe that the coolant may have a longer transit time through the core in the forward direction, which would cause Thot to increase, thus increasing Tave.

C. Incorrect because Loop 3 RCP is not required to be tripped. Plausible because motor stator winding temperature is close to the value that requires the RCP to be tripped. Also, RCP Shaft vibration is at a level that creates an alarm in the control room, but below the value that requires the pump to be tripped (20 mils).

D. Incorrect because Loop 3 RCP is not required to be tripped. Plausible because motor stator winding temperature is close to the value that requires the RCP to be tripped. Also, RCP Shaft vibration is at a level that creates an alarm in the control room, but below the value that requires the pump to be tripped (20 mils).

REFERENCES

1. V-LO-TX-16001 Reactor Coolant System.doc, Chpt. 16, Sect. B, Pg. 39, Rev. 3.
2. System Operating Procedure 13003-1, Rev. 31, 02/17/2004, Step 2.2.10
3. Vogtle Initial Exam VG02301, Question 003A2.02.

MCS	Time:	1	Points:	1.00	Version:	0 1 2 3 4 5 6 7 8 9	
					Answer:	A A D C D C B C A C	Scramble Range: A - D

Tier:	2	Group:	1
Key Word:	RCP TAVE TAVG	Cog Level:	C/A 3.1
Source:	M	Exam:	VG05301
Test:	R	Author/Reviewer:	MAB/RSB

3. 003K5.03 001

Unit 1 reactor power is 6% Rated Thermal Power with all four RCPs running. The following Loop 2 and 3 RCP indications are noted by the Control Room Staff.

Loop 2 RCP: Motor Bearing Temperature = 195 °F
Motor Stator Winding Temperature = 312 °F
Seal Water Inlet Temperature = 224 °F
RCP Shaft Vibration = 14 mils
RCP Frame Vibration = 3 mils

Loop 3 RCP: Motor Bearing Temperature = 175 °F
Motor Stator Winding Temperature = 310 °F
Seal Water Inlet Temperature = 226 °F
RCP Shaft Vibration = 16 mils
RCP Frame Vibration = 4 mils

Based on the above indications, assuming the required operator actions are taken, which ONE of the following describes the affect on Tave and the reason for the affect on Tave. response of the affected loop Tave and the reason . . .

A. Loop 2 Tave will initially decrease due to securing Loop 2 RCP.

B. Loop 2 Tave will initially increase due to securing Loop 2 RCP.

C. Loop 3 Tave will initially decrease due to securing Loop 3 RCP.

D. Loop 3 Tave will initially increase due to securing Loop 3 RCP.

K/A

003 Reactor Coolant Pump

K5.03 Knowledge of the operational implications of the following concepts as they apply to the RCPS: Effects of RCP shutdown on Tave, including the reason for the unreliability of Tave in the shutdown loop.

K/A MATCH ANALYSIS

The K/A is matched for the following reasons:

- Knowledge of operational implications of an RCP being tripped is matched by testing the directional trend in Tave when the RCP is initially tripped. The operational implication of tripping an RCP is that Tave initially trends down.
- The reason for the unreliability of Tave is matched because Loop 2 Tave becomes unrepresentative due to the Loop 2 RCP being tripped. Therefore, the Loop 2 Tave indication is unreliable due to the Loop 2 RCP being tripped.

ANSWER / DISTRACTOR ANALYSIS

A. Correct because Loop 2 Tave is required to be tripped (Ref. 2) due to high motor stator winding temperature (> 311°F) and Tave will initially decrease due to reverse flow, which occurs when the Loop 2 RCP is tripped.

B. Incorrect because Loop 2 Tave will not increase due to a reduction in hot leg temperature due to the reverse flow, which occurs when Loop 2 RCP is tripped. Plausible because a misconception could exist where the applicant may believe that the coolant may have a longer transit time through the core in the forward direction, which would cause Thot to increase, thus increasing Tave.

C. Incorrect because Loop 3 RCP is not required to be tripped. Plausible because motor stator winding temperature is close to the value that requires the RCP to be tripped. Also, RCP Shaft vibration is at a level that creates an alarm in the control room, but below the value that requires the pump to be tripped (20 mils).

D. Incorrect because Loop 3 RCP is not required to be tripped. Plausible because motor stator winding temperature is close to the value that requires the RCP to be tripped. Also, RCP Shaft vibration is at a level that creates an alarm in the control room, but below the value that requires the pump to be tripped (20 mils).

REFERENCES

1. V-LO-TX-16001 Reactor Coolant System.doc, Chpt. 16, Sect. B, Pg. 39, Rev. 3.
2. System Operating Procedure 13003-1, Rev. 31, 02/17/2004, Step 2.2.10
3. Vogtle Initial Exam VG02301, Question 003A2.02.

MCS	Time:	1	Points:	1.00	Version:	0 1 2 3 4 5 6 7 8 9	
					Answer:	A A D C D C B C A C	Scramble Range: A - D

Tier:	2	Group:	1
Key Word:	RCP TAVE TAVG	Cog Level:	C/A 3.1
Source:	M	Exam:	VG05301
Test:	R	Author/Reviewer:	MAB/RSB

2.9 During RCS filling and venting, RCS pressure must be greater than 325 psig prior to starting an RCP to ensure adequate seal D/P is maintained throughout RCS fill and vent. If necessary, the RCP should be stopped prior to seal D/P dropping less than 200 psid. If the seal D/P goes below 200 psid during pump operation or coast down, the RCP should be evaluated before restarting the RCP.

2.2.10 An RCP shall be stopped if any of the following conditions exist.

a. Motor bearing temperature exceeds 195°F.

b. Motor stator winding temperature exceeds 311°F.

c. Seal water inlet temperature exceeds 230°F

d. Total loss of ACCW for a duration of 10 minutes.

e. RCP shaft vibration of 20 mils or greater.

f. RCP frame vibration of 5 mils or greater.

g. Differential pressure across the number 1 seal of less than 200 psid.

2.2.11 If a loss of RCP seal cooling (Seal Injection and/or ACCW to Thermal barrier) occurs, resulting in RCP shutdown due to exceeding operating limits, then the unit should be cooled down to Mode 5 to facilitate recovery. Upon reaching Mode 5, ACCW to the Thermal barrier should be restored. Seal injection should then be returned to service. This sequence should prevent seal damage, RCP shaft bowing, ACCW System damage, etc. due to excessive thermal stresses.

3.0 PREREQUISITES AND INITIAL CONDITIONS

3.1 The Reactor Coolant Drain Tank is in service.

3.2 The Chemical and Volume Control System is available to supply seal flow to the RCPs.

3.3 The Volume Control Tank is in service.

REACTOR COOLANT PUMP OPERATION

PROCEDURE USAGE REQUIREMENTS		SECTIONS
Continuous Use:	Procedure must be open and readily available at the work location. Follow procedure step by step unless otherwise directed.	ALL
Reference Use:	Procedure or applicable section(s) available at the work location for ready reference by person performing steps.	NONE
Information Use:	Available on plant site for reference as needed.	NONE

REQUIREMENTS FOR REACTOR COOLANT PUMP STARTUP

1) Shutdown Margin Satisfied

2) UOP conditions satisfied

3) No alarms

   a) RCP Oil levels (allowed only in special circumstances)
   b) RCP cooler flows (ACCW)
   c) RCP Standpipe level

2) Number 1 seal leak off per 13003-1 figure 2(RCP SOP)

3) Number 1 seal Delta P Greater than 200 psid. Points used to measure the delta p are seal injection pressure and seal return pressure. This differential pressure is required to ensure that a film of exist between the two sealing surfaces of the number 1 seal.

4) 8-13 GPM Seal injection flow

5) A minimum VCT pressure of ≥18 psig (amount of backpressure required to force some number seal leak off to inject into the number 2 seal).

6) Oil lift pump in service for a minimum of 2 minutes.

RCP STARTING DUTIES

1) Only one RCP shall be started at any one time.

2) Two successful starts are permitted, provided the motor is permitted to coast to a stop between starts.

3) A third start may be made when the winding and core have cooled by running for a period of 20 minutes, or by standing idle for a period of 45 minutes. (Both times are from the second start).

CONDITIONS THAT REQUIRE IMMEDIATE RCP TRIP

(See Figure IPC screen of RCP parameters monitored)

1) Any motor bearing temperature exceeds 195°F.

1) Motor stator winding temperature exceeds 311°F.

2) Seal water inlet temperature exceeds 230°F.

3) Total loss of ACCW for 10 minutes (except thermal barrier heat exchanger when seal injection is in service).

4) RCP shaft vibration ≥ 20 mils (alarms at 15 mils and 20 mils)

5) Frame vibration ≥ 5 mils (alarms at 3 and 5 mils)

6) Differential pressure across the number 1 seal < 200 psid.

T2/G1 003 K5.03

VG02301

QUESTIONS REPORT
for Westinghouse 4-Loop Questions

1. 003A2.02S 002

Unit 1 Reactor power has been reduced to remove Loop 3 RCP due to excessive vibrations.

Which ONE of the following describes the plant response at the time the RCP is tripped and any follow-up action required?

A. Tave in loop 3 increases to T_{hot} of the other 3 loops and MFW flow to loop 3 must be reduced.

B. Tave in loop 3 decreases below T_{cold} of the other 3 loops and MFW flow to loop 3 must be reduced.

C. Delta T in loop 3 increases above Delta T of the other 3 loops and MFW flow to the other 3 loops must be reduced.

D. Delta T in loop 3 decreases below Delta T of the other 3 loops and MFW flow to the other 3 loops must be increased.

Ref: VG Ann Response 17021-1 window A01

A & C are incorrect because loop 3 Tavg decreases
D is incorrect because loop 3 has no spray valve
B is correct because when a RCP is removed from service, a reverse flow occurs in the affected loop. The result is a significant reduction in the RCS hot leg temperature and reduction in steam generation from the affected SG. Previous experience in losing an RCP "at power" showed that Tavg in the affected loop went below Tcold in the active loops until feedwater was isolated and a thermal equilibrium was reached. In this instance, Tavg for the affected loop could go below the minimum temperature for criticality. Tavg will return to greater than 551°F in <10 minutes following isolation of
feedwater to the idle S/G.

RO Tier:	T2G1	SRO Tier:	T2G1
K/A Value:	RCP	Cog. Level:	C/A 3.7/3.9
Source:	M	Exam:	VG02301
Test:	S	Misc:	KFOCFV

Test Name	Test Date	rpb	p(Diff)	Time	Equ	User Values	
<Cumulative>		0.000	0.000	0	N	1: 0	2: 0
						3: 0	4: 0

--- A ---			--- B ---			--- C ---			--- D ---					
Resp	%	Avg	Resp	%	Avg	Resp	%	Avg	Resp	%	Avg	Resp	%	Avg
<Cumulative>					Total:	0	100				Omits:	0	0	
0	0	0.00	0	0	0.00	0	0	0.00	0	0	0.00			

Matches K/A because ΔT and thus Tave becomes nonrepresentative in loop 3.
(This may be a stretch, but it is worth pondering)

4. 004A2.07 001

The following Unit 1 conditions exist:

- Reactor is at 100% Rated Thermal Power
- PRZR LVL CNTL SELECT Switch is selected to CH 459 / 460
- PRZR LVL REC SEL Switch is selected to L-459
- LI-459 (Pressurizer Level Indicator) fails low
- Operators enter 18001-C, Primary Systems Instrumentation Malfunctions

Which ONE of the following correctly states the plant's expected response and correct operator actions?

A. LV-459 (Letdown Isolation Valve) fully closes then HV-8149A, B, and C (Letdown Orifice Isolation Valves) fully close. After de-selecting the failed channel and ensuring letdown valves closed, restore letdown by opening HV-8149B, then opening LV-459 and LV-460.

B. HV-8149A, B, and C (Letdown Orifice Isolation Valves) fully close then LV-459 (Letdown Isolation Valve) fully closes. After de-selecting the failed channel and ensuring letdown valves closed, restore letdown by opening HV-8149B, then opening LV-459 and LV-460.

C. LV-459 (Letdown Isolation Valve) fully closes then HV-8149A, B, and C (Letdown Orifice Isolation Valves) fully close. After de-selecting the failed channel and ensuring letdown valves closed, restore letdown by opening LV-459 and LV-460, then opening HV-8149B.

D. HV-8149A, B, and C (Letdown Orifice Isolation Valves) fully close then LV-459 (Letdown Isolation Valve) fully closes. After de-selecting the failed channel and ensuring letdown valves closed, restore letdown by opening LV-459 and LV-460, then opening HV-8149B.

K/A
004 Chemical and Volume Control
A2.07 Ability to (a) predict the impacts of the following malfunctions or operations on the CVCS; and (b) based on those predictions, use procedures to correct, control, or mitigate the consequences of those malfunctions or operations: Isolation of letdown / makeup.

K/A MATCH ANALYSIS
The pressurizer level channel failure causes a letdown isolation valve to close. The impact of the letdown isolation valve closing is that the orifice isolation valves also close. Procedures then provide steps to restore letdown in a specific sequence caused by the automatic isolation of letdown. Therefore, the question addresses the impacts of letdown isolation as well as the procedural steps to mitigate the consequences. Even though the actions to restore are provided in procedure steps, only system knowledge is needed to answer the question, thus no references should be provided.

ANSWER / DISTRACTOR ANALYSIS

A. Incorrect. As stated below the orifice isolation valves will close prior to the letdown isolation valves. Also incorrect because upon restoration of letdown, LV-459 & 460 must be opened prior to HV-8149B being opened due to an interlock. Plausible because applicant may not be aware of the actuator design that allows for the quicker air bleed.
B. Incorrect. Upon restoration of letdown, LV-459 & 460 must be opened prior to HV-8149B being opened due to an interlock. Plausible because applicant may not be aware of the interlock which will dictate the restoration sequence.
C. Incorrect. As stated below the orifice isolation valves will close prior to the letdown isolation valves. Plausible because applicant may not be aware of the actuator design that allows for the quicker air bleed.
D. Correct. CVCS System Description, Page 9, states that in the case of an automatic isolation, the actuators of the orifice isolation valves are designed to bleed air quicker so that they close before the letdown isolation valves (to avoid flashing). An auto close signal originates from the failed level transmitter (CVCS System Description, Page 8).

UTILITY NEEDS TO VERIFY THAT ORIFICE ISOLATION VALVES GET A CLOSED SIGNAL. OTHERWISE, "C" WOULD BE THE CORRECT ANSWER.

REFERENCES

1. Abnormal Operating Procedure 18001-C, Primary Systems Instrumentation Malfunctions, Rev. 23.2, 11/03/2003.
2. Abnormal Operating Procedure 18007-C, Chemical and Volume Control Malfunction, Rev. 17, 02/25/2004.
3. System Operating Procedure 13006-1, Chemical and Volume Control System, Rev. 62, 07/14/2004, Section 4.1.1.18.
4. Lesson Plan V-LO-TX-09101, Chemical and Volume Control System Lesson Plan, Rev. 3

MCS	Time:	1	Points:	1.00	Version:	0 1 2 3 4 5 6 7 8 9	
					Answer:	D A A A D C C C B A	Scramble Range: A - D

Tier:	2	Group:	1
Key Word:	LETDOWN ISOLATION	Cog Level:	C/A 3.4
Source:	N	Exam:	VG05301
Test:	R	Author/Reviewer:	MAB/RSB

4. 004A2.07 001

The following Unit 1 conditions exist:

- Reactor is at 100% Rated Thermal Power
- PRZR LVL CNTL SELECT Switch is selected to CH 459 / 460
- PRZR LVL REC SEL Switch is selected to L-459
- LI-459 (Pressurizer Level Indicator) fails low
- Operators enter 18001-C, Primary Systems Instrumentation Malfunctions~~, and 18007-C, Chemical and Volume Control Malfunction~~

Which ONE of the following correctly states the plant's expected response and correct operator actions?

A. LV-459 (Letdown Isolation Valve) fully closes then HV-8149A, B, and C (Letdown Orifice Isolation Valves) fully close. After de-selecting the failed channel and ensuring letdown valves closed, restore letdown by opening HV-8149B, then opening LV-459 and LV-460.

B. HV-8149A, B, and C (Letdown Orifice Isolation Valves) fully close then LV-459 (Letdown Isolation Valve) fully closes. After de-selecting the failed channel and ensuring letdown valves closed, restore letdown by opening HV-8149B, then opening LV-459 and LV-460.

C. LV-459 (Letdown Isolation Valve) fully closes then HV-8149A, B, and C (Letdown Orifice Isolation Valves) fully close. After de-selecting the failed channel and ensuring letdown valves closed, restore letdown by opening LV-459 and LV-460, then opening HV-8149B.

D. HV-8149A, B, and C (Letdown Orifice Isolation Valves) fully close then LV-459 (Letdown Isolation Valve) fully closes. After de-selecting the failed channel and ensuring letdown valves closed, restore letdown by opening LV-459 and LV-460, then opening HV-8149B.

K/A
004 Chemical and Volume Control
A2.07 Ability to (a) predict the impacts of the following malfunctions or operations on the CVCS; and (b) based on those predictions, use procedures to correct, control, or mitigate the consequences of those malfunctions or operations: Isolation of letdown / makeup.

K/A MATCH ANALYSIS
The pressurizer level channel failure causes a letdown isolation valve to close. The impact of the letdown isolation valve closing is that the orifice isolation valves also close. Procedures then provide steps to restore letdown in a specific sequence caused by the automatic isolation of letdown. Therefore, the question addresses the impacts of letdown isolation as well as the procedural steps to mitigate the consequences. Even though the actions to restore are provided in procedure steps, only system

knowledge is needed to answer the question, thus no references should be provided.

ANSWER / DISTRACTOR ANALYSIS

A. Incorrect. As stated below the orifice isolation valves will close prior to the letdown isolation valves. Also incorrect because upon restoration of letdown, LV-459 & 460 must be opened prior to HV-8149B being opened due to an interlock. Plausible because applicant may not be aware of the actuator design that allows for the quicker air bleed.
B. Incorrect. Upon restoration of letdown, LV-459 & 460 must be opened prior to HV-8149B being opened due to an interlock. Plausible because applicant may not be aware of the interlock which will dictate the restoration sequence.
C. Incorrect. As stated below the orifice isolation valves will close prior to the letdown isolation valves. Plausible because applicant may not be aware of the actuator design that allows for the quicker air bleed.
D. Correct. CVCS System Description, Page 9, states that in the case of an automatic isolation, the actuators of the orifice isolation valves are designed to bleed air quicker so that they close before the letdown isolation valves (to avoid flashing). An auto close signal originates from the failed level transmitter (CVCS System Description, Page 8).

UTILITY NEEDS TO VERIFY THAT ORIFICE ISOLATION VALVES GET A CLOSED SIGNAL. OTHERWISE, "C" WOULD BE THE CORRECT ANSWER.

REFERENCES

1. Abnormal Operating Procedure 18001-C, Primary Systems Instrumentation Malfunctions, Rev. 23.2, 11/03/2003.
2. Abnormal Operating Procedure 18007-C, Chemical and Volume Control Malfunction, Rev. 17, 02/25/2004.
3. System Operating Procedure 13006-1, Chemical and Volume Control System, Rev. 62, 07/14/2004, Section 4.1.1.18.
4. Lesson Plan V-LO-TX-09101, Chemical and Volume Control System Lesson Plan, Rev. 3

MCS	Time:	1	Points:	1.00	Version:	0 1 2 3 4 5 6 7 8 9	
					Answer:	D A A A D C C C B A	Scramble Range: A - D

Tier:	2	Group:	1
Key Word:	LETDOWN ISOLATION	Cog Level:	C/A 3.4
Source:	N	Exam:	VG05301
Test:	R	Author/Reviewer:	MAB/RSB

4. 004A2.07 001

The following Unit 1 conditions exist:

- Reactor is at 100% Rated Thermal Power
- PRZR LVL CNTL SELECT Switch is selected to CH 459 / 460
- PRZR LVL REC SEL Switch is selected to L~~460~~ 459 ← consider rewording
- LI-459 (Pressurizer Level Indicator) fails low
- Operators enter 18001-C, Primary Systems Instrumentation Malfunctions, and 18007-C, Chemical and Volume Control Malfunction

Which ONE of the following correctly states the plant's expected response and correct operator actions?

A. ok. ~~L~~V-459 (Letdown Isolation Valve) fully closes then ~~F~~V-8149A, B, and C (Letdown Orifice Isolation Valves) fully close. After de-selecting the failed channel and ensuring letdown valves closed, restore letdown by opening FC-8149B, then opening LV-459 and LV-460.

B. H ~~F~~V-8149A, B, and C (Letdown Orifice Isolation Valves) fully close then LV-459 (Letdown Isolation Valve) fully closes. After de-selecting the failed channel and ensuring letdown valves closed, restore letdown by opening FC-8149B, then opening LV-459 and LV-460.

C. LV-459 (Letdown Isolation Valve) fully closes then H ~~F~~V-8149A, B, and C (Letdown Orifice Isolation Valves) fully close. After de-selecting the failed channel and ensuring letdown valves closed, restore letdown by opening LV-459 and LV-460, then opening ~~F~~C-8149B. HV-

D. H ~~F~~V-8149A, B, and C (Letdown Orifice Isolation Valves) fully close then LV-459 (Letdown Isolation Valve) fully closes. After de-selecting the failed channel and ensuring letdown valves closed, restore letdown by opening LV-459 and LV-460, then opening ~~F~~C-8149B. HV-

K/A
004 Chemical and Volume Control
A2.07 Ability to (a) predict the impacts of the following malfunctions or operations on the CVCS; and (b) based on those predictions, use procedures to correct, control, or mitigate the consequences of those malfunctions or operations: Isolation of letdown / makeup.

K/A MATCH ANALYSIS
The pressurizer level channel failure causes a letdown isolation valve to close. The impact of the letdown isolation valve closing is that the orifice isolation valves also close. Procedures then provide steps to restore letdown in a specific sequence caused by the automatic isolation of letdown. Therefore, the question addresses the impacts of letdown isolation as well as the procedural steps to mitigate the consequences. Even though the actions to restore are provided in procedure steps, only system

knowledge is needed to answer the question, thus no references should be provided.

ANSWER / DISTRACTOR ANALYSIS

A. Incorrect. As stated below the orifice isolation valves will close prior to the letdown isolation valves. Also incorrect because upon restoration of letdown, LV-459 & 460 must be opened prior to FC-8149B being opened due to an interlock. Plausible because applicant may not be aware of the actuator design that allows for the quicker air bleed.
B. Incorrect. Upon restoration of letdown, LV-459 & 460 must be opened prior to FC-8149B being opened due to an interlock. Plausible because applicant may not be aware of the interlock which will dictate the restoration sequence.
C. Incorrect. As stated below the orifice isolation valves will close prior to the letdown isolation valves. Plausible because applicant may not be aware of the actuator design that allows for the quicker air bleed.
D. Correct. CVCS System Description, Page 9, states that in the case of an automatic isolation, the actuators of the orifice isolation valves are designed to bleed air quicker so that they close before the letdown isolation valves (to avoid flashing). An auto close signal originates from the failed level transmitter (CVCS System Description, Page 8).

UTILITY NEEDS TO VERIFY THAT ORIFICE ISOLATION VALVES GET A CLOSED SIGNAL. OTHERWISE, "C" WOULD BE THE CORRECT ANSWER.

REFERENCES

1. Abnormal Operating Procedure 18001-C, Primary Systems Instrumentation Malfunctions, Rev. 23.2, 11/03/2003.
2. Abnormal Operating Procedure 18007-C, Chemical and Volume Control Malfunction, Rev. 17, 02/25/2004.
3. System Operating Procedure 13006-1, Chemical and Volume Control System, Rev. 62, 07/14/2004, Section 4.1.1.18.
4. Lesson Plan V-LO-TX-09101, Chemical and Volume Control System Lesson Plan, Rev. 3

MCS	Time:	1	Points:	1.00	Version:	0 1 2 3 4 5 6 7 8 9	
					Answer:	D A A A D C C C B A	Scramble Range: A - D

Tier:	2	Group:	1
Key Word:	LETDOWN ISOLATION	Cog Level:	C/A 3.4
Source:	N	Exam:	VG05301
Test:	R	Author/Reviewer:	MAB/RSB

See below a simplified drawing depicting the normal charging and letdown, and seal injection flow paths.

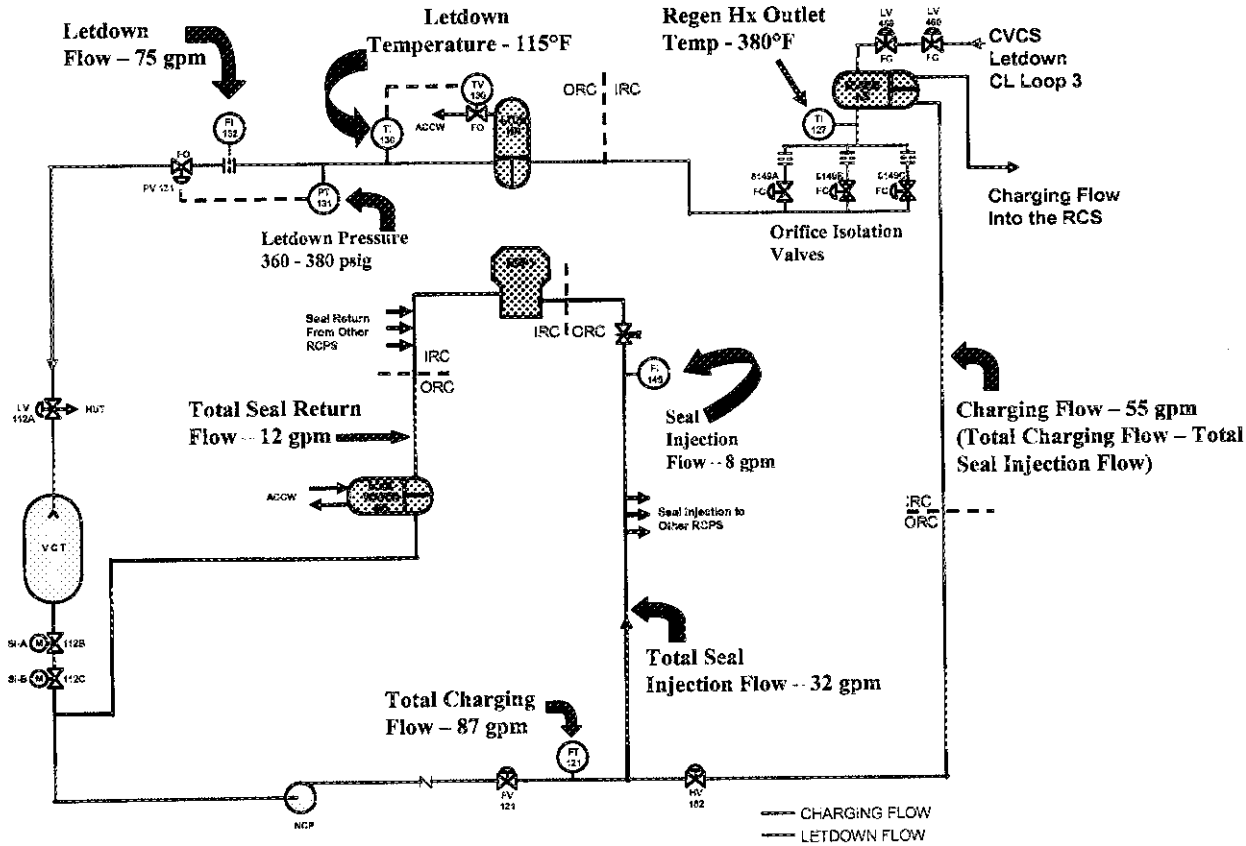

SIMPLIFIED CVCS SYSTEM

If you lose control of letdown temperature for any reason (including equipment failures) the best course of action is to isolate letdown by shutting the orifice isolation valve and prevent flashing in the letdown line.

Raising charging flow to raise pressurizer level is not limited by the regenerative heat exchanger temperatures. As charging flow is raised, letdown temperature will lower. What does limit you in this case is the capability of automatic makeup to the VCT (100 gpm).

To familiarize yourself with these basic CVCS manipulations you should practice raising and lowering charging line flow in the simulator with the unit at power. Your goal is to control RCP seal injection 8-13 gpm per pump and not cause any CVCS temperature, pressure, or flow alarms while maximizing and minimizing charging line flow. This skill will be useful in all basic CVCS manipulations to control pressurizer level at a desired value and is a prerequisite to other CVCS manipulations such as changing letdown flows, restoring and isolating charging & letdown, and swapping charging pumps.

SECTION A

CVCS LETDOWN SYSTEM

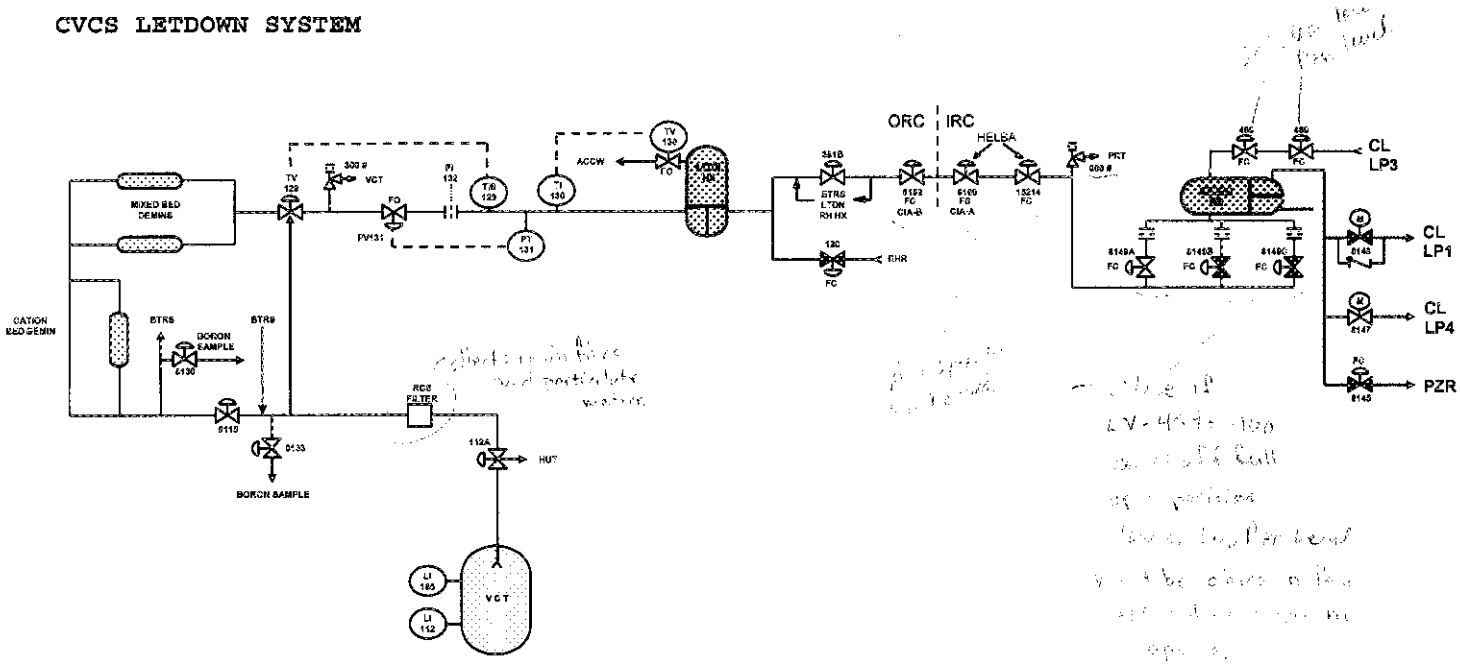

9.1 GENERAL LETDOWN SYSTEM FLOW PATH

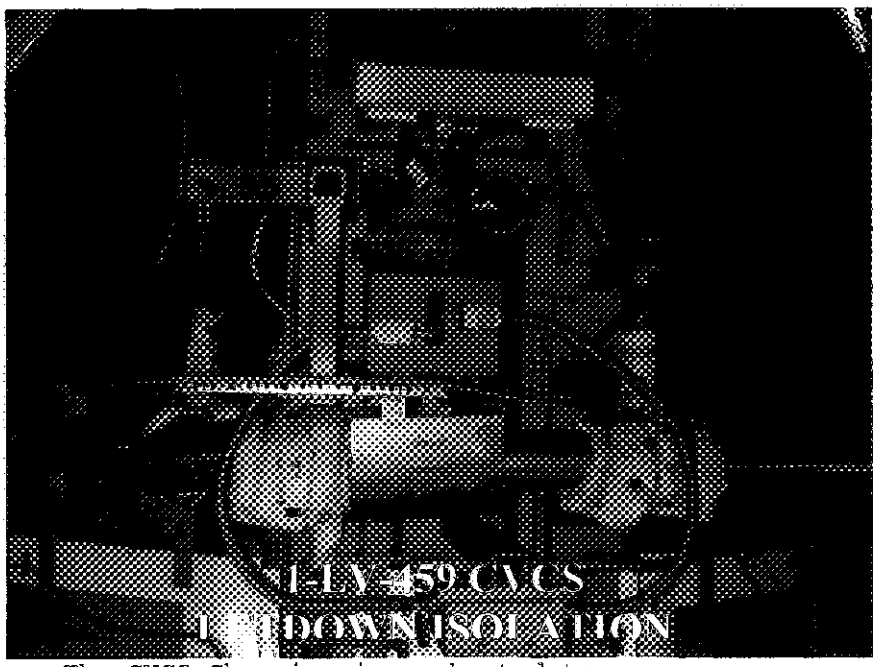

The Letdown system provides a means of bleeding the Reactor Coolant system for purification, chemical, gas, and volume control. The Letdown system begins at the RCS loop # 3 Cold leg penetration and ends at the **V**olume **C**ontrol **T**ank (VCT). Use the diagram above to follow along as the different component are discussed. Starting at the beginning the system is two Letdown Isolation valves (LV-459 and LV-460) both are in series will automatically isolate to protect the primary by automatically isolating on low Pressurizer level. Next in line from the Letdown Isolation valves is the Regenerative Heat Exchanger. The Regen Heat Exchanger which it is commonly called, serves a dual purpose. It conserves heat energy by using CVCS Charging for its cooling medium. The CVCS Charging is preheated to approximately 520°F as it cools the CVCS Letdown from 557°F to approximately 260°F. The CVCS Charging is preheated to protect the RCS charging penetration from thermal stress and the CVCS Letdown flow is cooled to provide subcooling. This subcooling

through the seal leak off isolation valves (HV-8141A, B, C, and D), through a motor-operated isolation valve (HV-8112), and then exits the containment building. The seal return flow immediately passes through a second motor-operated isolation valve (HV-8100) upon exiting the containment. Both of these motor-operated isolation valves serve to isolate the containment upon receiving a Containment Isolation Actuation(CIA) signal. Seal water return flow next passes through the seal water return filter which removes any insoluble material picked up as the seal water passed through the reactor coolant pump seals. It is then reduced in temperature from approximately 175°F to 130°F as it passes through the tube side of the seal water heat exchanger before returning through an isolation valve to the suction header of the charging pumps.

FIGURE 9-3
CVCS CHARGING
and SEAL INJECTION

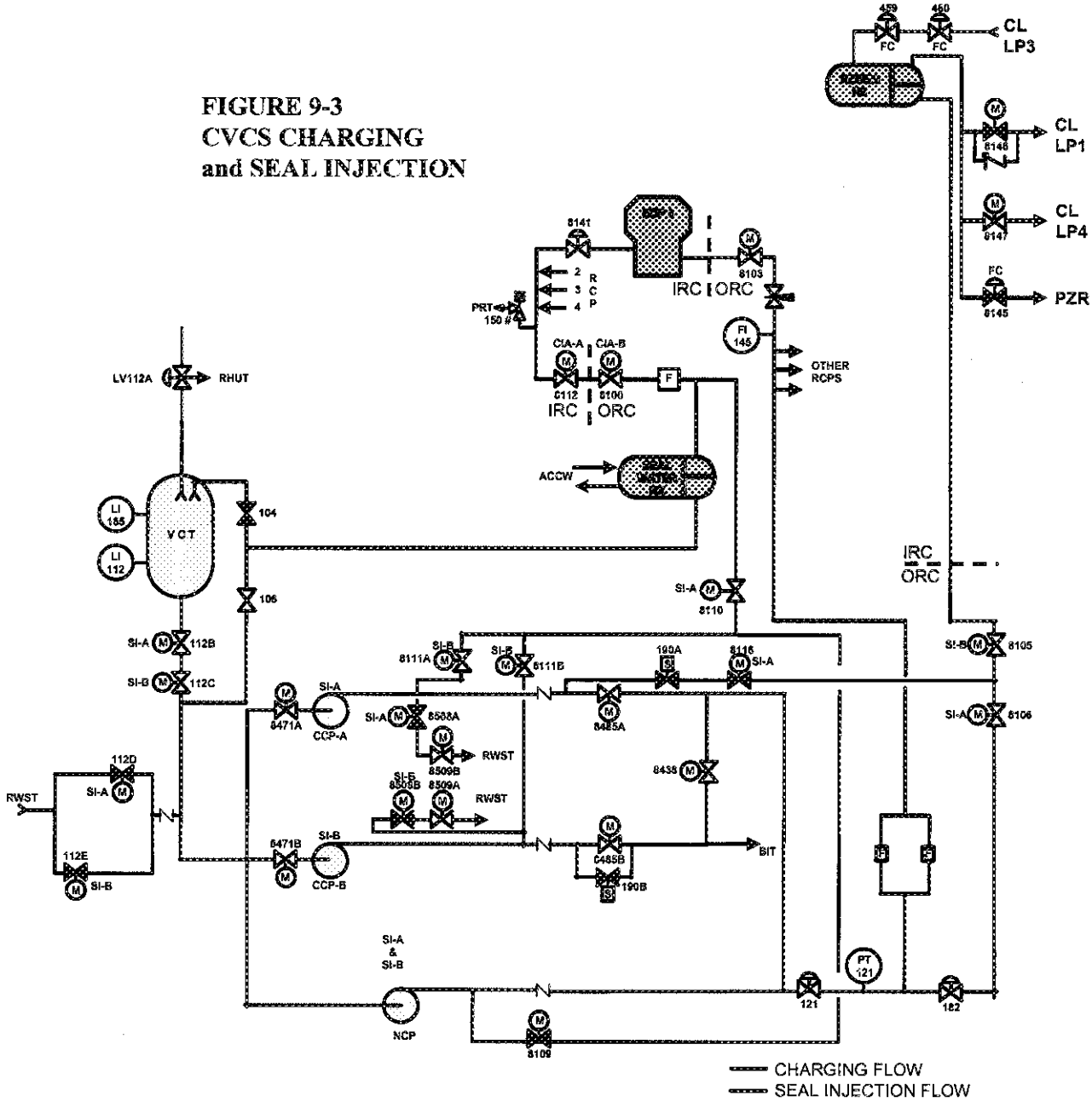

9.2 COMPONENT DESCRIPTIONS

The major components of the CVCS Letdown flow path are as follows.

Letdown Isolation Valves

These air-operated globe valves, normally open, (fail close) valves (LV-459 and LV-460) have three position hand switches with Open, Auto, and Close Positions. The hand switches spring return from Open to Auto. The valves have the following automatic features/interlocks:

a. An open valve will shut on low level in the pressurizer to prevent loss of RCS inventory. This signal comes from the respective channel selected on the pressurizer level control selector switch. As shown in the picture below, channels LI-459 and LI-460 are selected. If LI-459 was to fail below 17%, then letdown isolation valve LV-459 would fail shut. However, LV-460 would remain open.

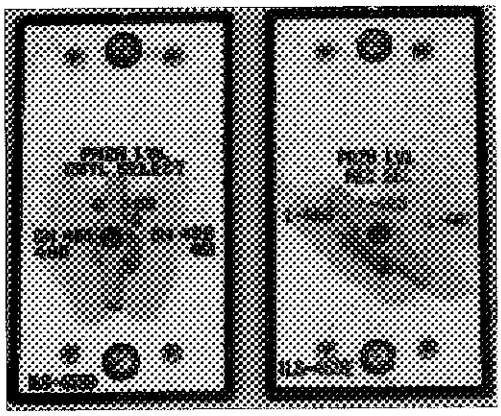

b. Valves cannot be opened or closed unless all orifice isolation valves are shut.

c. Both valves must be open to open an orifice isolation valve.

d. If either valve comes off of its full open limit switch, all orifice isolation valves close.

Regenerative Heat Exchanger

The regenerative heat exchanger is designed to use the heat given up by the letdown flow to heat charging flow. This minimizes the thermal stress on the charging line penetration and improves the system thermal efficiency. The letdown flow must be cooled to prevent flashing of the reactor coolant when its pressure is reduced as it passes through the letdown orifices. Pressure control valve PV-131 normally maintains letdown pressure at approximately 370 psig.

TE-127 measures the temperature of the regenerative heat exchanger outlet letdown flow and provides control room indication. Normal letdown temperature is approximately 260°F. Per SOP 13006, temperature should not be allowed to exceed 380°F. If letdown temperature reaches 400°F, a high temperature annunciator alarm is activated in the control room. The unit is fabricated from austenitic stainless steel of all-welded construction. The heat exchanger is located inside the containment.

Letdown Orifices

The letdown orifices (two 75 gpm, one 45 gpm) reduce coolant pressure from reactor conditions and limit the flow of reactor coolant leaving the Reactor Coolant System. The orifices are placed into or out of service by remote operation of their respective isolation valves. One 75 gpm orifice is designed for normal operating flow, with the other 75 gpm serving as a standby. The 45 gpm orifice may be used in parallel with the normally operating orifice for flow control when the Reactor Coolant System pressure is less than normal, or when greater letdown flow is required such as during plant heat up or when maximum purification is desired.

The letdown orifices are interlocked with the letdown isolation valves LV-459 and LV-460. The letdown isolation valves must be open before an orifice isolation valve can be opened. The orifice isolation valves must be shut before the letdown isolation valves can be shut. In the case for an automatic isolation signal in which both letdown and orifice isolation valves receive a close signal, the AOV's for the orifices are designed to bleed air from their actuators faster so that they close first before the letdown isolation valves. This prevents depressurization of the letdown line between the orifices and PV-131, which would result in flashing.

The pressure relief valve(PSV-8117) downstream of the letdown orifices protects the low pressure piping and the letdown heat exchanger from overpressure when the low pressure piping is isolated. The discharge point is to the Pressurizer Relief Tank(PRT) located inside containment. The capacity of the relief valve is equal to the maximum flow rate through all letdown orifices. The valve set pressure of 600 psig is equal to the design pressure of the letdown heat exchanger tube side. TE-125 measures the discharge temperature of relief valve PSV-8117 in the letdown line. Temperature indication and high alarm are provided on the main control board. An alarm would indicate the relief valve is either leaking or has lifted due to a high pressure condition.

High Energy Line Break Protection and Containment Isolation Valves

Downstream of the regenerative heat exchanger are two high energy line break protection isolation valves, HV-15214 and HV-8160. By design, the letdown piping installed from the hot leg penetration to the containment wall is of sufficient length to allow decay of N-16 caused by the neutron activation of oxygen ($O^{16} + n \rightarrow N^{16} + \gamma$). If a letdown line break occurs in the Aux Building, high temperature conditions would be present. At a temperature of 135°F, an automatic isolation of normal letdown would occur, called a high energy line break actuation(HELBA). In the Aux Building three areas have two temperature sensors, one of each providing input to either HV-15214 or HV 8160. Therefore, each valve has three temperature inputs with each one sensing temperature in only one of the three rooms. These rooms are the letdown heat exchanger, the valve gallery outside the letdown heat exchanger, and the containment-auxiliary building penetration room.

Outside of containment is letdown isolation valve HV-8152. Additionally, HV-8160 serves as the inside containment isolation valve. These valves automatically shut on a Containment Isolation Phase A Actuation Signal(CIA).

Letdown Heat Exchanger

The letdown heat exchanger cools the letdown flow to the operating temperature of the mixed-bed demineralizers (≈115°F). The letdown flow goes through the tube side of the heat exchanger while auxiliary component cooling water flows through the shell side. A temperature control valve TV-130 is automatically set to control the ACCW flow exiting the shell side of the letdown heat exchanger. Letdown flow outlet temperature TI-130 provides a signal into the TV-130 valve controller and it provides indication of the main control board. The desired temperature is adjusted on the controller potentiometer. The tube side of the unit is fabricated from austenitic stainless steel, and the shell side is carbon steel. The letdown

Abnormal Operating Procedures

CHEMICAL AND VOLUME CONTROL SYSTEM MALFUNCTION

PURPOSE

PRB REVIEW REQUIRED

This procedure specifies the actions to be taken in the event of a malfunction in the Chemical and Volume Control System. Specific actions are provided for the following abnormal conditions:

A. Total Loss of Letdown Flow.

B. Loss of Charging Flow.

C. Loss of VCT Makeup.

SYMPTOMS

Specific symptoms are provided for each type of malfunction under the appropriate section heading.

A. TOTAL LOSS OF LETDOWN FLOW

SYMPTOMS

- LTDN HX OUT HI PRESS Annunciator. E-3 17007-1
- LP LTD RELIEF HI TEMP Annunciator.
- Charging return temperature TI-0126 indicating less than 120°F.
- PRZR level rising with no change in Tavg.

A. TOTAL LOSS OF LETDOWN FLOW

ACTION/EXPECTED RESPONSE	RESPONSE NOT OBTAINED
A1. Check CVCS letdown flowpath:	
a. Check CVCS Letdown Valves - OPEN: • LV-0459 CVCS LTDN ISO closed → • LV-0460 CVCS LTDN ISO • CVCS LTDN ORIFICE ISO VALVES (ANY OPEN): • HV-8149A • HV-8149B • HV-8149C • PV-0131 LOW PRESSURE LTDN CONTROL • HV-15214 CVCS LTDN PIPE BREAK PROT ISO • HV-8160 CVCS RCS LETDOWN LINE ISO VLV • HV-8152 CVCS RCS LETDOWN LINE ISO VLV	a. IF CVCS Letdown Valve(s) NOT open, THEN close the following valves: • LV-0459 auto close • LV-0460 manual close • HV-8149A, B & C auto close Verify PV-0131 operating properly. IF HV-15214 or HV-8160 closed, THEN check affected unit room temperatures: UNIT 1: • R-A07 • R-A08 • R-A09 UNIT 2: • R-A100 • R-A101 • R-A103 IF affected room temperatures are greater than 135°F, THEN investigate reason for high temperature in rooms before opening affected valves and restoring letdown. Verify that instrument air to containment is established. IF letdown can be restored, THEN restore letdown by initiating 13006, CHEMICAL AND VOLUME CONTROL SYSTEM.

A. TOTAL LOSS OF LETDOWN FLOW

ACTION/EXPECTED RESPONSE	RESPONSE NOT OBTAINED
(Step 1 continued from previous page)	
b. Check TV-0381B CVCS LTDN BTRS DEMIN INLET TEMP CNTRL - OPEN by verifying the DILUTE or OFF light on HS-10351 is illuminated.	b. OPEN TV-0381B REHEAT HEAT EXCHANGER RETURN by failing open and venting its air supply, TY-0381D-EAI. LOCATIONS; UNIT 1: Aux Bldg R-A08 UNIT 2: Aux Bldg R-A102
c. Check HV-8115 CVCS LETDOWN DIVERT TO BTRS - OPEN.	c. IF BTRS is in service, THEN ensure alignment for letdown flow by verifying white light illuminated on HS-10351 or by initiating 13010, BORON THERMAL REGENERATION SYSTEM.
A2. Check letdown flow - 0 GPM.	A2. Go to Step A7.
A3. Adjust HV-0182 as necessary to maintain seal injection 8 to 13 gpm per RCP.	
A4. Maintain charging flow approximately 10 gpm greater than TOTAL seal injection flow to prevent an additional thermal cycle on the charging nozzle and to limit PRZR level rise.	

A. TOTAL LOSS OF LETDOWN FLOW

ACTION/EXPECTED RESPONSE	RESPONSE NOT OBTAINED
NOTE: Operation of the excess letdown flowpath will bypass the CVCS demineralizers. This may impact RCS chemistry control.	
A5. Initiate 13008, CHEMICAL AND VOLUME CONTROL SYSTEM EXCESS LETDOWN to maintain PRZR level within program band.	
A6. Verify PRZR level - TRENDING TO PROGRAM.	A6. IF PRZR level cannot be maintained, THEN isolate charging by performing the following; a. Slowly close FV-121 while opening HV-182 to maintain seal injection between 8 gpm and 13 gpm, b. Close HV-8106, c. Notify Engineering about the temperature cycle of the charging nozzle.
A7. Restore normal letdown and charging flow within 1 hour.	A7. Evaluate the impact of continued power operation with normal letdown and normal charging out of service.
* A8. Check normal letdown flow - ESTABLISHED.	* A8. When normal letdown capability is restored, initiate 13006, CHEMICAL AND VOLUME CONTROL SYSTEM.

END OF SUB-PROCEDURE TEXT

B. LOSS OF CHARGING FLOW

SYMPTOMS

- CHARGING LINE HI/LO FLOW Annunciator. B-6 17007-1
- RCP SEAL WATER INJECTION LO FLOW Annunciator.
- REGEN HX LTDN HI TEMP Annunciator. A-5 17007-1
- CHARGING PUMP OVERLOAD TRIP Annunciator. C-6 17007-1

ACTION/EXPECTED RESPONSE	RESPONSE NOT OBTAINED
B1. Check charging and letdown: a. Check one or more charging pumps - RUNNING. b. Check letdown flow not flashing - FI-132C READING STEADY.	B1. Isolate letdown.
B2. Check ACCW system - IN SERVICE	B2. Initiate 18022-C, LOSS OF AUXILIARY COMPONENT COOLING WATER.

CAUTION: If an operating charging pump fails due to suspected gas binding (fluctuating discharge pressure and flow,) the standby pump shall not be started until the cause of the gas binding is understood and all affected piping and components have been vented. (CO0039640)

B3. Start standby charging pump, if required by initiating 13006, CHEMICAL AND VOLUME CONTROL SYSTEM.	B3. Initiate the following Technical Specifications and/or Technical Requirements as necessary: • LCO 3.5.2 • LCO 3.5.3 • LCO 3.5.5 • TR 13.1.2 • TR 13.1.3 • TR 13.1.4 • TR 13.1.5

B. LOSS OF CHARGING FLOW

ACTION/EXPECTED RESPONSE	RESPONSE NOT OBTAINED
B4. Check RCP seal injection flow - 8 TO 13 GPM PER PUMP.	B4. Adjust seal flow to maintain 8 to 13 gpm per pump. IF unable to establish seal injection flow to RCPs, THEN perform the following: a. Verify ACCW cooling to RCP Thermal Barriers. b. Refer to 13003, REACTOR COOLANT PUMP OPERATION. IF HV-0182 inoperable, THEN locally perform the following: UNIT 1 (AB-C112) a. Throttle 1-1208-U6-136 CVCS CHG HDR HV-0182 BYPASS ISO. b. Shut 1-1208-U6-134 CVCS CHG HDR HV-0182 INLET ISO. c. Shut 1-1208-U6-135 CVCS CHG HDR HV-0182 OUTLET ISO. UNIT 2 (AB-C09) a. Throttle 2-1208-U6-136 CVCS CHG HDR HV-0182 BYPASS ISO. b. Shut 2-1208-U6-134 CVCS CHG HDR HV-0182 INLET ISO. c. Shut 2-1208-U6-135 CVCS CHG HDR HV-0182 OUTLET ISO.

B. LOSS OF CHARGING FLOW

ACTION/EXPECTED RESPONSE	RESPONSE NOT OBTAINED
B5. Check the normal charging valves - OPEN: • HV-8105 • HV-8106 • HV-8146 or HV-8147 • HV-8485A and B • FV-0121	B5. Attempt to open any valve that is closed. IF charging NOT available, THEN initiate 13006, CHEMICAL AND VOLUME CONTROL SYSTEM to establish safety grade charging.

NOTE: Operation of the excess letdown flowpath will bypass the CVCS demineralizers. This may impact RCS chemistry control.

* B6. Control PRZR level - IN PROGRAM BAND.	* B6. IF PRZR level high, THEN establish letdown by initiating 13006, CHEMICAL AND VOLUME CONTROL SYSTEM. IF normal letdown cannot be established, THEN initiate 13008, CHEMICAL AND VOLUME CONTROL SYSTEM EXCESS LETDOWN.
B7. Locate and Isolate any charging system leakage.	
* B8. Maintain PRZR level and seal flow until normal charging is restored.	* B8. Commence unit shutdown by initiating appropriate UOPs.

CAUTION: Letdown should be established as soon as possible after initiation of charging through the charging nozzle.

* B9. Check normal charging flow - ESTABLISHED.	* B9. WHEN normal charging flowpath can be established, THEN place normal charging and letdown in service by initiating 13006, CHEMICAL AND VOLUME CONTROL SYSTEM.

END OF SUB-PROCEDURE TEXT

C. LOSS OF VCT MAKEUP

SYMPTOMS

- VCT HI/LO LEVEL Annunciator. E-5 17007-1
- AUTO MAKE-UP START SIGNAL BLOCKED Annunciator. D-5 17007-1
- TOTAL MAKEUP FLOW DEVIATION Annunciator.
- BA FLOW DEVIATION Annunciator. F-1 17007-1
- Indicate low VCT level.

ACTION/EXPECTED RESPONSE	RESPONSE NOT OBTAINED
* C1. Operate PRZR heaters and sprays as required to stabilize RCS pressure and temperature.	

NOTE: Charging pump suction shifts to RWST when VCT level lowers to less than 6%.

C2. Verify the following:	
a. At least one boric acid transfer pump - RUNNING.	a. Start standby boric acid transfer pump.
b. At least one reactor makeup pump - RUNNING.	b. Start standby reactor makeup pump.
c. VCT makeup valve alignment - CORRECT FOR SELECTED MODE.	c. Align valves to establish VCT makeup per 13009, CVCS REACTOR MAKEUP CONTROL SYSTEM.
d. Letdown divert valve LV-0112A - ALIGNED TO VCT.	d. Align LV-0112A to VCT.
* C3. Check that VCT makeup flow is restored.	* C3. Initiate repairs. WHEN VCT makeup is restored, THEN return to procedure in effect.

C. LOSS OF VCT MAKEUP

ACTION/EXPECTED RESPONSE | RESPONSE NOT OBTAINED

NOTE: RCP seal injection flow should be maintained.

C4. Lower charging flow to maintain PRZR level - GREATER THAN 21%.

C5. Raise letdown flow to maintain VCT level.

C. LOSS OF VCT MAKEUP

ACTION/EXPECTED RESPONSE	RESPONSE NOT OBTAINED
CAUTION: There should be careful consideration when performing step C6a. Opening these manual dilution valves should be performed only as a last resort and should be well planned and coordinated.	
C6. Perform the following as necessary: a. Dilution 1) Dispatch an operator to open: UNIT 1 (AB-A47) 1-1208-U4-183 UNIT 2 (AB-A82) 2-1208-U4-183 2) Start one Reactor Makeup Water Pump. -OR-	C6. IF VCT makeup NOT adequately controlling boron concentration, THEN borate or dilute as necessary by initiating 13010, BORON THERMAL REGENERATION SYSTEM.

C. LOSS OF VCT MAKEUP

ACTION/EXPECTED RESPONSE	RESPONSE NOT OBTAINED
(Step 6 continued from previous page) b. Boration Emergency borate. -OR- 1) Dispatch an operator to open: UNIT 1 (AB-A47) 1-1208-U4-188 UNIT 2 (AB-A82) 2-1208-U4-188 2) Ensure Train B CCP is running. 3) Open FV-110A using HS-110A or by failing its air supply as follows: UNIT 1 (AB-A47) • Shut 1-2420-U4-339. • Open 1-2420-U4-340. UNIT 2 (AB-A89) • Shut 2-2420-U4-339. • Open 2-2420-U4-340. 4) Start one boric acid transfer pump.	
C7. Check VCT level - GREATER THAN 6%.	C7. Verify charging pump suction shifts to RWST. Commence unit shutdown.

C. LOSS OF VCT MAKEUP

ACTION/EXPECTED RESPONSE	RESPONSE NOT OBTAINED
* C8. Check VCT makeup - RESTORED TO NORMAL.	* C8. WHEN VCT makeup is restored to normal, THEN return to procedure in effect.

END OF PROCEDURE TEXT

Abnormal Operating Procedures

PRIMARY SYSTEMS INSTRUMENTATION MALFUNCTION

PURPOSE

PRB REVIEW REQUIRED

This procedure provides instructions for mitigation of the following primary plant instrument failures:

A. Failure of RCS Loop Flow Instrumentation.

B. Failure of RCS Loop Narrow Range Temperature Instrumentation.

C. Failure of PRZR Pressure Instrumentation.

D. Failure of PRZR Level Instrumentation.

E. Failure of Steam Generator Level Instrumentation.

F. Failure of Steam Generator Pressure Instrumentation.

G. Failure of Steam Generator Flow Instrumentation.

H. Failure of Turbine Impulse Pressure Instrumentation.

SYMPTOMS

Specific symptoms for each instrumentation failure are located under the appropriate section.

D. FAILURE OF PRZR LEVEL INSTRUMENTATION

SYMPTOMS

- PRZR CONTROL HI LEVEL DEV AND HEATERS ON Annunciator.
- PRZR HI LEVEL ALARM.
- PRZR HI LEVEL CHANNEL ALERT Annunciator.
- PRZR LO LEVEL DEVIATION Annunciator.
- PRZR LO LEVEL HTR CNTL OFF LTDN SECURED Annunciator.

ACTION/EXPECTED RESPONSE	RESPONSE NOT OBTAINED
NOTE: If letdown has isolated it should be restored as expeditiously as possible to minimize pressurizer level transient.	
* D1. Check PRZR level - TRENDING TO PROGRAM LEVEL.	* D1. Maintain charging flow approximately 10 gpm greater than TOTAL seal injection flow to prevent an additional thermal cycle on the charging nozzle and to limit PRZR level rise.
* D2. Maintain RCP seal injection flow 8 to 13 gpm.	
D3. Select an unaffected channel on PRZR LEVEL CONTROL SELECTOR switch LS-459D.	
D4. Select the same channel on PRZR LEVEL RECORDER SELECTOR switch LS-459E.	

D. FAILURE OF PRZR LEVEL INSTRUMENTATION

ACTION/EXPECTED RESPONSE	RESPONSE NOT OBTAINED
* D5. Restore letdown flow by initiating 13006, CHEMICAL AND VOLUME CONTROL SYSTEM, if required.	* D5. Control PRZR level: a. Initiate 13008, CHEMICAL AND VOLUME CONTROL SYSTEM EXCESS LETDOWN. b. Refer to 18007-C, CHEMICAL AND VOLUME CONTROL SYSTEM MALFUNCTION if letdown cannot be restored in a timely manner. c. Control charging to maintain PRZR level.
D6. Restore PRZR heaters to service, if instrument failure has caused them to trip off.	
D7. Return PRZR level control to AUTO.	
* D8. Verify PRZR level is maintained by auto control.	* D8. Maintain manual PRZR level control.
D9. Initiate maintenance for repairs.	
D10. Bypass the affected instrument channel per 13509-C, BYPASS TEST INSTRUMENTATION (BTI) PANEL OPERATION, if desired.	
D11. Within 72 hours, trip the affected channel bistables and place the associated MASTER TEST switch to TEST per TABLE D1.	D11. Place the reactor in hot standby within 78 hours.

D. FAILURE OF PRZR LEVEL INSTRUMENTATION

ACTION/EXPECTED RESPONSE	RESPONSE NOT OBTAINED
*D12. When repairs and surveillances are complete, THEN perform the following: a. Return tripped bistables to NORMAL position, b. Return MASTER TEST switch to the NORMAL position. c. Return PRZR LEVEL CONTROL SELECTOR SWITCH LS-459D to the desired position. (Channel 459/460 is the normal position.) d. Select LS-459E PRZR LEVEL RECORDER SELECTOR SWITCH to the controlling channel (per LS-459D position).	

END OF SUB-PROCEDURE TEXT

Sheet 1 of 1

TABLE D1

CAUTIONS:

- Only one channel should be tripped.
- The bistable input is placed in the tripped state by positioning the selector switch on the specified test card to TEST.
- The bistable input identified by the switch number should agree with the location specified by CAB, CARD, and B/S before tripping a bistable input. If a discrepancy exists, CAB-CAR-B/S should be used, not switch number.
- The inoperable channel must be placed in the tripped condition within 72 hours of when it was declared inoperable.
- Bypassing another channel for Surveillance Testing with a channel inoperable is permitted provided the inoperable channel is in the tripped condition and the channel being tested in not bypassed for more than 12 hours.

SSPS INPUT	CAB	FRAME /CARD	B/S	SWITCH	
LT-459 Failure (Channel 1) High Level Reactor Trip **MASTER TEST SWITCH**	1	8/47 8/73	1	LS-459A 7	(___) (___)
LT-460 Failure (Channel 2) High Level Reactor Trip **MASTER TEST SWITCH**	2	8/47 8/73	1	LS-460A 7	(___) (___)
LT-461 Failure (Channel 3) High Level Reactor Trip **MASTER TEST SWITCH**	3	8/44 8/73	1	LS-461A 7	(___) (___)

1.1.18 When plant conditions permit, PLACE letdown in-service as follows:

NOTE

Establish Letdown, as soon as possible after initiating flow through a charging nozzle.

a. ENSURE the following:

(1) CLOSE LETDOWN ORIFICE ISOLATIONS

- 1-HV-8149A,
- 1-HV-8149B,
- 1-HV-8149C,

(2) CLOSE LETDOWN ISOLATION VLV UPSTREAM and DOWNSTREAM

- 1-LV-0460
- 1-LV-0459,

(3) CLOSE PZR AUX SPRAY VALVE 1-HV-8145.

b. OPEN CVCS LETDOWN PIPE BREAK PROT ISOLATION 1-HV-15214,

c. OPEN RCS LETDOWN LINE ISO VLV IRC 1-HV-8160,

d. OPEN RCS LETDOWN LINE ISO VLV ORC 1-HV-8152,

e. PLACE LETDOWN PRESS 1-PIC-0131 in MANUAL and output adjusted to approximately 60%,

f. PLACE LETDOWN HX OUTLET TEMP 1-TIC-0130 in MANUAL and adjust to approximately 50%,

Formatted: Bullets and Numbering

Formatted: Bullets and Numbering

Deleted: and

Formatted: Bullets and Numbering

Formatted: 1., Bulleted + Level: 1 + Aligned at: 2.25" + Tab after: 2.5" + Indent at: 2.5"

Deleted: and

Formatted: 1., Bulleted + Level: 1 + Aligned at: 2.25" + Tab after: 2.5" + Indent at: 2.5"

g. ENSURE PRESSURIZER LEVEL 1-LR-0459 greater than 17% and trending to program,

h. OPEN LETDOWN ISOLATION VLV UPSTREAM and DOWNSTREAM 1-LV-0460 and 1-LV-0459 by holding 1-HS-0460 and 1-HS-0459 in OPEN until the valves are fully OPEN.

i. Simultaneously, PERFORM the following:

- ADJUST Charging Flow Control 1-FIC-0121 to obtain between 80 and 90 gpm.

- ADJUST Seal Flow Control 1-HC-0182 to obtain between 8 and 13 gpm to each RCP.

Deleted: (1)
Formatted: Bullets and Numbering

Deleted: (2)
Formatted: Bullets and Numbering

j. ESTABLISH Letdown flow by simultaneously performing the following:

NOTE

The 75 gpm letdown orifices should be alternated over plant life to equalize erosion. Letdown orifice FO-201 (HV-8149B) should be in-service during odd-numbered fuel cycles, FO 202 (HV-8149C) should be in-service during even numbered fuel cycles.

(1) HOLD in the OPEN position until fully OPEN one Letdown 75 gpm Orifice:

- 1-HS-8149B for 1-HV-8149B,

- OR -

- 1-HS-8149C for 1-HV-8149C.

(2) ADJUST 1-PIC-0131 to maintain LETDOWN PRESS 1-PI-0131A between 360 and 380 psig.

(3) RECORD the letdown orifice that was placed in-service, in the Unit Control Log.

k. When LETDOWN PRESS 1-PI-0131A stabilizes between 360 and 380 psig, PLACE 1-PIC-0131 in AUTO.

l. PLACE LETDOWN HX OUTLET TEMP 1-TIC-0130 in AUTO and ENSURE it maintains temperature less than or equal to 115°F.

m. ENSURE REGEN HEAT EXCH LETDWN 1-TI-0127 indicates less than 380°F.

n. MONITOR 1-LR-0459 pressurizer level and pressurizer level setpoint.

o. MAINTAIN pressurizer level within 1% of setpoint using 1-FIC-0121 output.

p. If desired, PLACE pressurizer level control in automatic:

(1) ENSURE PRZR LEVEL CONT 1-LIC-0459 in AUTO,

(2) PLACE 1-FIC-0121 in AUTO.

Deleted: (a)
Formatted: Bullets and Numbering
Deleted: or
Formatted: Font: Bold
Deleted: (b)
Formatted: Bullets and Numbering

5. 004K6.13 001

Unit 1 was at 100% Rated Thermal Power (RTP) for two weeks following a refueling outage when the following sequence of events occurred:

Time	Actions / Condition
13:00:00	Plant at 100% RTP
13:05:00	Plant at 85% RTP (Ramp down due to feedwater problems)
14:00:00	- VCT level = 30% - VCT auto make-up begins - The air line supplying FV-0110A (Boric Acid to Blender Valve) completely severes
14:01:00	Current time.

Assuming no operator action, which ONE of the following correctly states control room indications that the operator will receive?

A. TOTAL MAKEUP FLOW DEVIATION Annunciator will NOT alarm. RCS temperature will rise.

B. TOTAL MAKEUP FLOW DEVIATION Annunciator will alarm. RCS temperature will rise.

C. TOTAL MAKEUP FLOW DEVIATION Annunciator will NOT alarm. RCS temperature will lower.

D. TOTAL MAKEUP FLOW DEVIATION Annunciator will alarm. RCS temperature will lower.

K/A
004 Chemical and Volume Control
K6.13 Knowledge of the effect of a loss or malfunction on the following CVCS components: Purpose and function of the boration / dilution batch controller.

K/A MATCH ANALYSIS
Knowledge of the effect of a malfunction of the boration part of the VCT auto make-up is being tested. The effect is that the failure will halt both water and boron flow to the VCT, which has a subsequent effect on RCS average temperature. Also, the annunciators alarming as a result of the failure would be an effect of the malfunction. The K/A also states purpose and function of the batch controller. The purpose and function are elementary knowledge that must be understood in order to comprehend the question; therefore, they are being tested, although not explicitly.

ANSWER / DISTRACTOR ANALYSIS
A. Incorrect. As stated below both alarms will annunciate. Plausible because the applicant may not be aware of the auto close feature of FV-0111B.
B. Incorrect. Xe is building in due to the power reduction (less of a removal term due to lower neutron flux). FV-0110A fails open on loss of air. When FV-0110A fails open, FT-0110 senses a flow mismatch which causes BA FLOW DEVIATION to alarm and FV-0110B and FV-0111B to close. This stops all VCT makeup flow from both boron and water sources. When FV-0111B closes, TOTAL MAKEUP FLOW DEVIATION also alarms. With Xe concentration rising, the RCS temp will lower.
C. Incorrect. TOTAL MAKEUP FLOW DEVIATION will alarm. Plausible because RCS temp will lower.
D. Correct. RCS temperature will lower due to Xe buildin and potentially from some BA injection (20 second time delay?).

REFERENCES
1. VEGP 18007-C, Rev. 17, Page 12 of 13: Step 3 provides info to support that FV-110A will open upon loss of air.
2. VEGP 18007-C, Rev. 17, Page 9 of 13: SYMPTOMS provide annunciator choices for distractors and answer.
3. TOTAL MAKEUP FLOW DEVIATION, 17007-1, Rev. 21, Page 18 of 38, Window C02.
4. BA FLOW DEVIATION, 17007-1, Rev. 21, Page 33 of 38, Window F01.
5. LO-LP-60307-08, Rev. 08, 02/28/2002, Page 10: Provides Annunciator setpoints.
6. V-LO-TX-09101, Chemical and Volume Control System: Lesson Plan provides information on the VCT Makeup System.

MCS	Time:	1	Points:	1.00	Version:	0 1 2 3 4 5 6 7 8 9	
					Answer:	D A C D B D C D C D	Scramble Range: A - D

Tier:	2	Group:	1
Key Word:	VCT MAKE-UP BORATE	Cog Level:	C/A 3.1
Source:	N	Exam:	VG05301
Test:	R	Author/Reviewer:	MAB/RSB

5. 004K6.13 001

Unit 1 was at 100% Rated Thermal Power (RTP) for two weeks following a refueling outage when the following sequence of events occurred:

Time	Actions / Condition
13:00:00	Plant at 100% RTP
13:05:00	Plant at 85% RTP (Ramp down due to feedwater problems)
14:00:00	- VCT level = 30% - VCT auto make-up begins - The air line supplying FV-0110A (Boric Acid to Blender Valve) completely severes
14:01:00	Current time.

Assuming no operator action, which ONE of the following correctly states control room indications that the operator will receive?

A. TOTAL MAKEUP FLOW DEVIATION Annunciator will NOT alarm. RCS temperature will rise.

B. TOTAL MAKEUP FLOW DEVIATION Annunciator will alarm. RCS temperature will rise.

C. TOTAL MAKEUP FLOW DEVIATION Annunciator will NOT alarm. RCS temperature will lower.

D. TOTAL MAKEUP FLOW DEVIATION Annunciator will alarm. RCS temperature will lower.

K/A
004 Chemical and Volume Control
K6.13 Knowledge of the effect of a loss or malfunction on the following CVCS components: Purpose and function of the boration / dilution batch controller.

K/A MATCH ANALYSIS
Knowledge of the effect of a malfunction of the boration part of the VCT auto make-up is being tested. The effect is that the failure will halt both water and boron flow to the VCT, which has a subsequent effect on RCS average temperature. Also, the annunciators alarming as a result of the failure would be an effect of the malfunction. The K/A also states purpose and function of the batch controller. The purpose and function are elementary knowledge that must be understood in order to comprehend the question; therefore, they are being tested, although not explicitly.

ANSWER / DISTRACTOR ANALYSIS
A. Incorrect. As stated below both alarms will annunciate. Plausible because the applicant may not be aware of the auto close feature of FV-0111B.
B. Incorrect. Xe is building in due to the power reduction (less of a removal term due to lower neutron flux). FV-0110A fails open on loss of air. When FV-0110A fails open, FT-0110 senses a flow mismatch which causes BA FLOW DEVIATION to alarm and FV-0110B and FV-0111B to close. This stops all VCT makeup flow from both boron and water sources. When FV-0111B closes, TOTAL MAKEUP FLOW DEVIATION also alarms. With Xe concentration rising, the RCS temp will lower.
C. Incorrect. TOTAL MAKEUP FLOW DEVIATION will alarm. Plausible because RCS temp will lower.
D. Correct. RCS temperature will lower due to Xe buildin and potentially from some BA injection (20 second time delay?).

REFERENCES
1. VEGP 18007-C, Rev. 17, Page 12 of 13: Step 3 provides info to support that FV-110A will open upon loss of air.
2. VEGP 18007-C, Rev. 17, Page 9 of 13: SYMPTOMS provide annunciator choices for distractors and answer.
3. TOTAL MAKEUP FLOW DEVIATION, 17007-1, Rev. 21, Page 18 of 38, Window C02.
4. BA FLOW DEVIATION, 17007-1, Rev. 21, Page 33 of 38, Window F01.
5. LO-LP-60307-08, Rev. 08, 02/28/2002, Page 10: Provides Annunciator setpoints.
6. V-LO-TX-09101, Chemical and Volume Control System: Lesson Plan provides information on the VCT Makeup System.

MCS Time: 1 Points: 1.00 Version: 0 1 2 3 4 5 6 7 8 9
Answer: D A C D B D C D C D Scramble Range: A - D

Tier:	2	Group:	1
Key Word:	VCT MAKE-UP BORATE	Cog Level:	C/A 3.1
Source:	N	Exam:	VG05301
Test:	R	Author/Reviewer:	MAB/RSB

5. 004K6.13 001

Unit 1 was at 100% Rated Thermal Power for two weeks following a refueling outage. One hour ago a rapid power reduction was completed to lower power to 85% within five minutes due to feedwater problems. VCT level is 30% and an auto make-up has just started when the air line supplying FV-0110A (Boric Acid to Blender Valve) completely severs.

Assuming no operator action, which ONE of the following correctly states the control room indications that the operator will receive?

A. RCS temperature will rise. BA FLOW DEVIATION Annunciator will alarm. TOTAL MAKEUP FLOW DEVIATION Annunciator will NOT alarm.

B. RCS temperature will rise. BA FLOW DEVIATION Annunciator and TOTAL MAKEUP FLOW DEVIATION Annunciator will alarm.

C. RCS temperature will lower. BA FLOW DEVIATION Annunciator will alarm. TOTAL MAKEUP FLOW DEVIATION Annunciator will NOT alarm.

D. RCS temperature will lower. BA FLOW DEVIATION Annunciator and TOTAL MAKEUP FLOW DEVIATION Annunciator will alarm.

FV-0110A fail open

BA Flow Dev

0110B
111B } close

K/A
004 Chemical and Volume Control
K6.13 Knowledge of the effect of a loss or malfunction on the following CVCS components: Purpose and function of the boration / dilution batch controller.

K/A MATCH ANALYSIS
Knowledge of the effect of a malfunction of the boration part of the VCT auto make-up is being tested. The effect is that the failure will halt both water and boron flow to the VCT, which has a subsequent effect on RCS average temperature. Also, the annunciators alarming as a result of the failure would be an effect of the malfunction. The K/A also states purpose and function of the batch controller. The purpose and function are elementary knowledge that must be understood in order to comprehend the question; therefore, they are being tested, although not explicitly.

ANSWER / DISTRACTOR ANALYSIS
A. Incorrect. As stated below both alarms will annunciate. Plausible because the applicant may not be aware of the auto close feature of FV-0111B. Building In
B. Correct. Xe is burning out due to the power reduction. FV-0110A fails open on loss of air. When FV-0110A fails open, FT-0110 senses a flow mismatch which causes BA FLOW DEVIATION to alarm and FV-0110B and FV-0111B to close. This stops all VCT makeup flow from both boron and water sources. When FV-0111B closes, TOTAL MAKEUP FLOW DEVIATION also alarms. With Xe concentration lowering, the RCS temp will rise.
C. Incorrect. RCS temp will rise due to all makeup flow being halted and Xe burning out. Plausible because the applicant may not be aware of the auto close feature of FV-0111B when a flow deviation is sensed. Also, the applicant may not understand that Xe is burning out, rather than building in.
D. Incorrect. RCS temp will rise due to all makeup flow being halted and Xe burning out. Plausible because the applicant may not be aware of the auto close feature of FV-0111B, but may think that the BA flow may be enough of a perterbation to cause the alarm. Also, the applicant may not understand that Xe is burning out, rather than building in.

REFERENCES
1. VEGP 18007-C, Rev. 17, Page 12 of 13: Step 3 provides info to support that FV-110A will open upon loss of air.
2. VEGP 18007-C, Rev. 17, Page 9 of 13: SYMPTOMS provide annunciator choices for distractors and answer.
3. TOTAL MAKEUP FLOW DEVIATION, 17007-1, Rev. 21, Page 18 of 38, Window C02.
4. BA FLOW DEVIATION, 17007-1, Rev. 21, Page 33 of 38, Window F01.
5. LO-LP-60307-08, Rev. 08, 02/28/2002, Page 10: Provides Annunciator setpoints.
6. V-LO-TX-09101, Chemical and Volume Control System: Lesson Plan provides information on the VCT Makeup System.

MCS Time: 1 Points: 1.00 Version: 0 1 2 3 4 5 6 7 8 9
Answer: B C A D C B D A B B Scramble Range: A - D

QUESTIONS REPORT
for Vogtle 2005-301 Draft

Tier:	2	Group:	1
Key Word:	VCT MAKE-UP BORATE	Cog Level:	C/A 3.1
Source:	N	Exam:	VG05301
Test:	R	Author/Reviewer:	MAB/RSB

Alternate version of Question

QUESTIONS REPORT
for VOGLTE 2005-301 REV 0

1. 004K6.13 001

Unit 1 was at 85% power for two weeks following a refueling outage. Two hours ago a power ascention was completed to raise power to 100% at the maximum allowable rate. VCT level is 30% and an auto make-up has just started when the air line supplying FV-0110A (Boric Acid to Blender Valve) completely severes. Assuming no operator action, which ONE of the following correctly states the control room indications that the operator will receive?

A. RCS temperature will rise. BA FLOW DEVIATION Annunciator will alarm. TOTAL MAKEUP FLOW DEVIATION Annunciator will NOT alarm.

B. RCS temperature will rise. BA FLOW DEVIATION Annunciator and TOTAL MAKEUP FLOW DEVIATION Annunciator will alarm.

C. RCS temperature will lower. BA FLOW DEVIATION Annunciator will alarm. TOTAL MAKEUP FLOW DEVIATION Annunciator will NOT alarm.

D. RCS temperature will lower. BA FLOW DEVIATION Annunciator and TOTAL MAKEUP FLOW DEVIATION Annunciator will alarm.

K/A
004 Chemical and Volume Control
K6.13 Knowledge of the effect of a loss or malfunction on the following CVCS components: Purpose and function of the boration / dilution batch controller.

K/A MATCH ANALYSIS
Knowledge of the effect of a malfunction of the boration part of the VCT auto make-up is being tested. The effect is that the failure will halt both water and boron flow to the VCT, which has a subsequent effect on RCS average temperature. Also, the annunciators alarming as a result of the failure would be an effect of the malfunction. The K/A also states purpose and function of the batch controller. The purpose and function are elementary knowledge that must be understood in order to comprehend the question; therefore, they are being tested, although not explicitly.

ANSWER / DISTRACTOR ANALYSIS
A. Incorrect. As stated in the correct answer below, RCS temp will lower due to Xe. Plausible because the applicant may not know that the dilution portion of the makeup has also stopped. If the applicant does is not aware of the interlock with FV-0111B, then the dilution would still be occurring, which would add enough water to more than compensate for the Xe buildin, thus causing RCS temp to rise. Also, if the interlock did not exist, then the TOTAL MAKEUP FLOW DEVIATION would not alarm.
B. Incorrect. As stated in the correct answer below, RCS temp will lower due to Xe. Also, the TOTAL MAKEUP FLOW DEVIATION Annunciator will alarm. Plausible because the applicant may not know that the dilution portion of the makeup has also stopped. If the applicant does is not aware of the interlock with FV-0111B, then the dilution would still be occurring, which would add enough water to more than compensate for the Xe buildin, thus causing RCS temp to rise. The applicant may also have a misconception with believing that simply having the boration part of the

makeup halted will cause enough perterbation to cause the TOTAL MAKEUP FLOW DEVIATION to alarm.

C. Incorrect. As stated in the correct answer below, the TOTAL MAKEUP FLOW DEVIATION Annunciator will alarm. Plausible because the applicant may not be aware of the interlock with FV-0111B, which will stop the makeup in its entirety.

D. Correct. Xenon is building in following the ramp to 100%. Air is lost to the actuator of FV-0110A, which is a fail open valve; therefore FV-0110A fails open. The resultant FT-110 flow deviation will create the BA FLOW DEVIATION alarm, which will auto close FV-0110B and FV-0111B, thus halting both water and boron flow to the VCT (makeup has stopped). The lack of VCT makeup flow will also cause the TOTAL MAKEUP FLOW DEVIATION alarm to annunciate. Due to the Xe build-in, RCS temperature will go down.

REFERENCES

1. VEGP 18007-C, Rev. 17, Page 12 of 13: Step 3 provides info to support that FV-110A will open upon loss of air.
2. VEGP 18007-C, Rev. 17, Page 9 of 13: SYMPTOMS provide annunciator choices for distractors and answer.
3. TOTAL MAKEUP FLOW DEVIATION, 17007-1, Rev. 21, Page 18 of 38, Window C02.
4. BA FLOW DEVIATION, 17007-1, Rev. 21, Page 33 of 38, Window F01.
5. LO-LP-60307-08, Rev. 08, 02/28/2002, Page 10: Provides Annunciator setpoints.
6. V-LO-TX-09101, Chemical and Volume Control System: Lesson Plan provides information on the VCT Makeup System.

Tier:	2	Group:	1
Key Word:	VCT MAKE-UP BORATE	Cog Level:	3.1
Source:		Exam:	VG05301
Test:	R	Author/Reviewer:	MAB/RSB

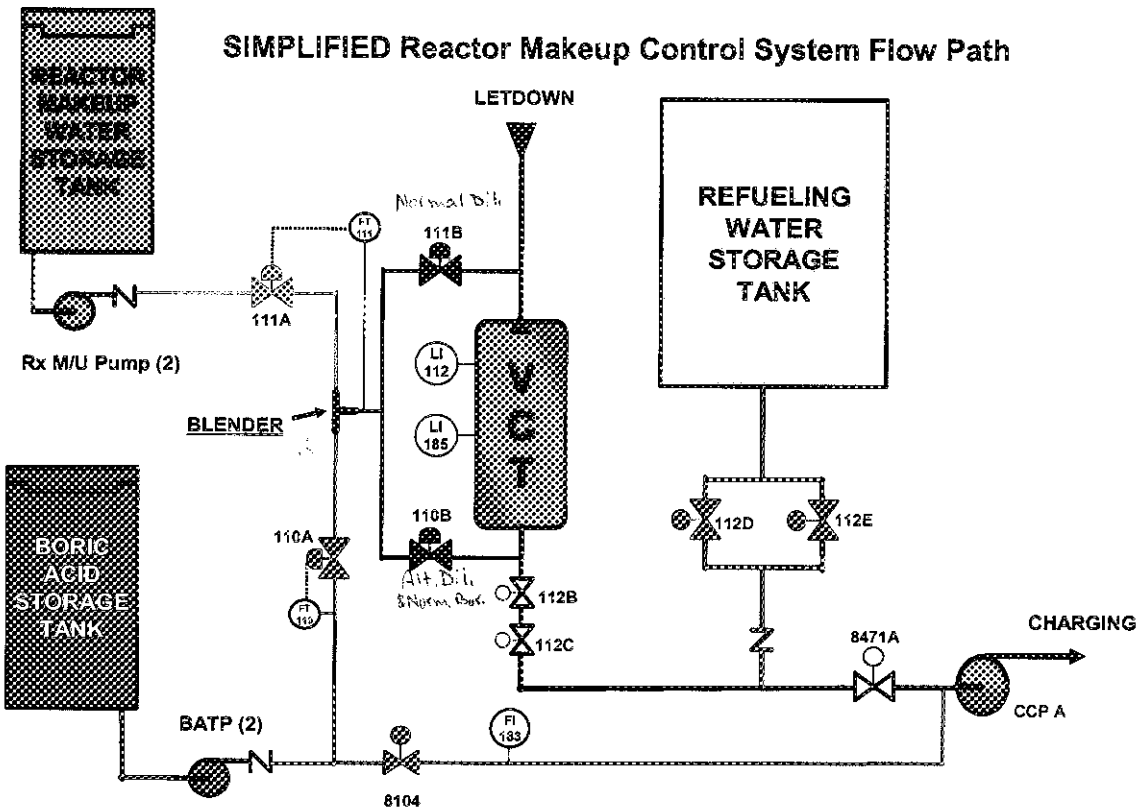

9.15 REACTOR MAKEUP CONTROL SYSTEM OPERATION

Dilution of the RCS Using RMCS

The RMCS is normally aligned for automatic makeup to the VCT. This occurs when VCT level transmitter LI-112 reaches 30%. However there are situations where the RO must dilute the RCS to maintain RCS Tavg on program due to daily fuel burn up, fission product poisons building in, or dilution to overcome the power defect during a ramp to 100%. For maintaining Tavg on program, this may involve a very small volume, 10 to 15 gallons at BOL, and a very large volume, 100 gallons per dilution several times per shift at EOL conditions. The amount of dilution needed is something that the RO gets a feel for based on how much Tavg lowers below Tref at RTP conditions. Typically, the previous shift's log entries will provide the oncoming RO with an idea of how much and the frequency of dilution to maintain Tavg on program.

A dilution requires positioning the following RMCS hand switches (see below) to the correct positions, DIL or ALT DIL, and STOP respectively.

ORIGIN	SETPOINT	WINDOW F01
1-FT-0110	± 0.8 gpm deviation from setpoint	BA FLOW DEVIATION

1.0 PROBABLE CAUSE

1. Boric Acid Transfer System malfunction

2. Malfunction of 1-FV-0110A.

2.0 AUTOMATIC ACTIONS

Closes 1-FV-0110B and 1-FV-0111B.

3.0 INITIAL OPERATOR ACTIONS

NONE

4.0 SUBSEQUENT OPERATOR ACTIONS

1. CHECK Volume Control Tank (VCT) level and pressure.

2. REFER to 13009-1, "CVCS Reactor Makeup Control System", and VERIFY correct system alignment and operation and RE-ESTABLISH makeup as required.

3. If makeup is lost, INITIATE 18007-C, "Chemical And Volume Control System Malfunction".

4. If equipment failure is indicated, INITIATE maintenance as required.

5.0 COMPENSATORY OPERATOR ACTIONS

NONE

END OF SUB-PROCEDURE

REFERENCES: 1X4DB116-1, 1X6AU01-185, 1X6AH01-10, PLS

WINDOW C02

ORIGIN	SETPOINT	TOTAL MAKEUP FLOW DEVIATION
1-FT-0111	±8 gpm deviation from setpoint	

1.0 PROBABLE CAUSE

1. Malfunction of 1-FV-0111A or 1-FV-0110A.

2. Reactor Makeup Water System malfunction.

2.0 AUTOMATIC ACTIONS

Closes 1-FV-0110B and 1-FV-0111B.

3.0 INITIAL OPERATOR ACTIONS

NONE

4.0 SUBSEQUENT OPERATOR ACTIONS

1. CHECK Volume Control Tank (VCT) level and pressure.

2. REFER to 13009-1, "CVCS Reactor Makeup Control System", and VERIFY correct system alignment and operation and RE-ESTABLISH makeup as required.

3. If makeup is lost, INITIATE 18007-C, "Chemical And Volume Control System Malfunction".

4. If equipment failure is indicated, INITIATE maintenance as required.

5.0 COMPENSATORY OPERATOR ACTIONS

NONE

END OF SUB-PROCEDURE

REFERENCES: 1X4DB116-1, 1X6AU01-185, 1X6AH01-10, PLS

III. LESSON OUTLINE: NOTES

III. Loss of VCT Makeup

A. Symptoms — Objective 5

1. VCT HI/LO level annunciator

   a. low level - (no makeup)

   b. High Level - VCT isolated or chg less than M/U and letdown

2. AUTO MAKE-UP START SIGNAL BLOCKED alarm

   Select switch not in AUTO and AUTO makeup being called for

3. TOTAL MAKEUP FLOW DEVIATION alarm

   +/- 8 GPM from setpoint over 20 sec TD due to bad lineup/makeup pump problem/control valve problem

4. BA FLOW DEVIATION alarm

   + 0.8 gpm from setpoint over a 20 sec TD due to same problem as above.

5. Indicated low VCT level

   a. Should rule out possibility of failed instrumentation

   b. Check both LT-185 and LT-112

B. Procedural Actions — Objective 2

1. Operate pressurizer heaters and sprays as required to stabilize RCS Pressure and Temperature.

   a. This action is there to stop changes in VCT level due to changes in RCS volume.

   b. Operator should not be confused about using pressure control devices to maintain RCS Temperature.

   c. Use Rods and turbine load to stabilize temperature,

III. LESSON OUTLINE: NOTES

2. NOTE: Charging pump suction shifts to RWST when VCT level lowers to less than 6%.

   a. **BOTH** LT-112 and LT-185 must be <6%.

   b. Operator must ensure swap to RWST occurs at 6% or Manual action is needed.

   c. If not, possible to swap to RWST or hold level >6% in VCT, STOP charging pumps!!!

3. Verify capability of makeup to the VCT by checking the following:

   a. Boric Acid Pump running.

      If not running start one.

   b. Reactor Makeup Water Pump running.

      Start if not running

   c. Makeup System correct for selected Mode.

      1) This is trouble shooting step.

NOTE: Students should be able to discuss what valves open/close/modulate in AUTO for every position on make up switch.

NOTE: Review Deviation alarms and when they stop blender, include adjustment of Potentiometers and integrator settings and when they stop blender.

      2) If blender is not working in selected mode, the RNO tells the operator to use 13009 to establish VCT makeup.

         This essentially allows the operator to select manual on blender, and any other device in the blender system that is not responding to an AUTO signal, even for MANUAL Makeup.

   d. Level control valve, LV-112A, into the VCT must be aligned to the VCT.

      1) Manually align if needed.

      2) This stops loss of CVCS letdown to the HUT.

III. LESSON OUTLINE: NOTES

4. Verify VCT Makeup restored.

   a. If not then get appropriate maintenance group working on problem.

   b. If System swaps to RWST it will not be possible to maintain 100% load.

5. While trying to restore makeup flow:

   a. Reduce charging flow to that required to maintain pressurizer level above 21%.

      This prevents letdown isolation

   b. Raise letdown flow to maintain VCT level

      1) This prevents Charging Pump Suction Swap over to VCT which will force a reactor shutdown or,

      2) in the worst case, loss of pump suction and possible pump damage.

6. Boration & Dilution (as required)

   a. Dilution is through the 183 valve and a RMW pump directly to charging pump suction.

   b. Boration is through 188 valve to suction of "B" charging pump or emergency boration path.

   c. Boration also through FV-110A by using Handswitch or failing air to valve and starting One Boric Acid Transfer Pump.

   d. If VCT makeup not adequately controlling RCS boron concentration, then borate or dilute as necessary using BTRS.

7. Maintain VCT level >6%

   a. to prevent swap over to RWST.

   b. If VCT level can not be maintained > 6%, then verify pump suction swaps to RWST, and commence Unit shutdown.

III. LESSON OUTLINE: NOTES

8. When VCT Makeup restored to normal return to procedure and step in effect.

C. Loss of VCT Makeup Concerns

1. Maintain Seal injection flow

   a. When reducing charging flow, seal injection must not be stopped.

   b. Even if CCP's shift to RWST, seal flow should always be maintained >8 gpm/RCP.

2. Effects on plant operation:

   a. Use care when dealing with problems with CVCS Makeup System. This situation could easily lead to a Reactivity Event due to incorrect makeup concentration.

   b. With system leakage, eventually the problem must be fixed or the unit shutdown and RWST used for Makeup.

3. Boron Control

   a. Consider BTRS to control boron concentration.

   b. Doesn't require inventory change.

III. LESSON OUTLINE: NOTES

III. SUMMARY

A. Review Objectives

1. **DESCRIBE WHY IT IS UNDESIRABLE TO OPERATE THE EXCESS LETDOWN FLOWPATH FOR EXTENDED PERIODS.**

   There is no demin RCS cleanup when excess letdown is on service

2. **GIVEN THE ENTIRE AOP, DESCRIBE:**

   a. **PURPOSE OF SELECTED STEPS**
   b. **HOW AND WHY THE STEP IS BEING PERFORMED**
   c. **EXPECTED RESPONSE OF THE PLANT/PARAMETER(S) FOR THE STEP**

   Refer to Action Sections of Lesson Plan and the procedure.

3. **DESCRIBE WHY LETDOWN FLOW MUST BE ISOLATED IF CHARGING FLOW IS LOST.**

   Prevent flashing in letdown line

4. **DESCRIBE HOW AND WHY THE RCP SEALS WILL BE AFFECTED BY A LOSS OF CHARGING FLOW.**

   With no seal injection flow to the RCP seals, RCS water will flow through the thermal barrier and to the seal. Seal damage can occur due to overheating.

5. **GIVEN CONDITIONS AND/OR INDICATIONS, DETERMINE THE REQUIRED AOP TO ENTER (INCLUDING SUBSECTIONS, AS APPLICABLE).**

   Refer to Symptoms Sections of Lesson Plan

6. **DESCRIBE THE REQUIRED OPERATOR ACTIONS IF DURING THE RECOVERY FROM A LOSS OF CHARGING FLOW, "AOP 18007-C", PRESSURIZER LEVEL AND SEAL FLOW CANNOT BE MAINTAINED.**

   Pressurizer level and seal flow must be maintained normal while normal charging is not available. If not possible a unit shutdown must be commenced.

7. **STATE THE TEMPERATURE RESTRICTIONS ASSOCIATED WITH RCP SEAL INJECTION RECOVERY FOLLOWING A LOSS OF CHARGING.**

   RCP seals must remain <230°F or actions to immediately stop the pump will be required. This guidance is found in Figure 1 of 13003 (RCP Seal Abnormalities Decision Tree). In either case, with elevated RCP seal temperatures, Westinghouse should be consulted for required actions.

C. LOSS OF VCT MAKEUP

SYMPTOMS

- VCT HI/LO LEVEL Annunciator. E-5 17007-2.doc
- AUTO MAKE-UP START SIGNAL BLOCKED Annunciator. D-5 17007-2.doc
- TOTAL MAKEUP FLOW DEVIATION Annunciator. C-2 17007-2.doc 17007-1.doc
- BA FLOW DEVIATION Annunciator. F1 17007-1.doc
- Indicate low VCT level.

ACTION/EXPECTED RESPONSE	RESPONSE NOT OBTAINED
* C1. Operate PRZR heaters and sprays as required to stabilize RCS pressure and temperature.	

NOTE: Charging pump suction shifts to RWST when VCT level lowers to less than 6%.

C2. Verify the following:

a. At least one boric acid transfer pump - RUNNING.	a. Start standby boric acid transfer pump.
b. At least one reactor makeup pump - RUNNING.	b. Start standby reactor makeup pump.
c. VCT makeup valve alignment - CORRECT FOR SELECTED MODE.	c. Align valves to establish VCT makeup per 13009, CVCS REACTOR MAKEUP CONTROL SYSTEM.
d. Letdown divert valve LV-0112A - ALIGNED TO VCT.	d. Align LV-0112A to VCT.
* C3. Check that VCT makeup flow is restored.	* C3. Initiate repairs. WHEN VCT makeup is restored, THEN return to procedure in effect.

C. LOSS OF VCT MAKEUP

ACTION/EXPECTED RESPONSE | RESPONSE NOT OBTAINED

NOTE: RCP seal injection flow should be maintained.

C4. Lower charging flow to maintain PRZR level - GREATER THAN 21%.

C5. Raise letdown flow to maintain VCT level.

C. LOSS OF VCT MAKEUP

ACTION/EXPECTED RESPONSE	RESPONSE NOT OBTAINED
CAUTION: There should be careful consideration when performing step C6a. Opening these manual dilution valves should be performed only as a last resort and should be well planned and coordinated.	
C6. Perform the following as necessary: a. Dilution 1) Dispatch an operator to open: UNIT 1 (AB-A47) 1-1208-U4-183 UNIT 2 (AB-A82) 2-1208-U4-183 2) Start one Reactor Makeup Water Pump. -OR-	C6. IF VCT makeup NOT adequately controlling boron concentration, THEN borate or dilute as necessary by initiating 13010, BORON THERMAL REGENERATION SYSTEM.

C. LOSS OF VCT MAKEUP

ACTION/EXPECTED RESPONSE	RESPONSE NOT OBTAINED
(Step 6 continued from previous page) b. Boration Emergency borate. -OR- 1) Dispatch an operator to open: UNIT 1 (AB-A47) 1-1208-U4-188 UNIT 2 (AB-A82) 2-1208-U4-188 2) Ensure Train B CCP is running. 3) Open FV-110A using HS-110A or by failing its air supply as follows: UNIT 1 (AB-A47) • Shut 1-2420-U4-339. • Open 1-2420-U4-340. UNIT 2 (AB-A89) • Shut 2-2420-U4-339. • Open 2-2420-U4-340. 4) Start one boric acid transfer pump.	
C7. Check VCT level - GREATER THAN 6%.	C7. Verify charging pump suction shifts to RWST. Commence unit shutdown.

C. LOSS OF VCT MAKEUP

ACTION/EXPECTED RESPONSE	RESPONSE NOT OBTAINED
* C8. Check VCT makeup - RESTORED TO NORMAL.	* C8. WHEN VCT makeup is restored to normal, THEN return to procedure in effect.

END OF PROCEDURE TEXT

6. 005A1.01 001

Unit 1 has just completed a cooldown via the RHR system. The following data was collected:

Today is May 27.

Time (hrs)	RCS Temperature (°F)	RCS Pressure (psig)
0100	300	350
0115	275	350
0130	250	350
0145	228	350
0200	200	350
0215	182	350
0230	147	350
0245	130	350
0300	100	350

Which ONE of the following correctly states the actions required by Technical Specifications? (Reference provided)

A. No Technical Specification REQUIRED ACTION covers the plant conditions. Enter LCO 3.0.3.

B. Perform Technical Specification required actions to restore parameters to within limits within 30 minutes. The RCS must be determined to be acceptable for continued operation by May 30 at 0230 hours.

C. Perform Technical Specification required actions to restore parameters to within limits within 30 minutes. The RCS must be determined to be acceptable for continued operation by May 30 at 0300 hours.

D. Perform Technical Specification required actions to immediately begin restoring parameters to within limits AND determine the RCS is acceptable for continued operation prior to entering Mode 4.

K/A
005 Residual Heat Removal
A1.07 Ability to predict and / or monitor changes in parameters (to prevent exceeding design limits) associated with operating the RHRS controls including: Heatup/cooldown rates.

K/A MATCH ANALYSIS
The cooldown is being accomplished via RHRS controls. The question tests the applicants ability to calculate the cooldown rate which is a skill needed to monitor the cooldown rate and prevent exceeding the cooldown rate limit. The cooldown rate is a design limit with brittle failure as its basis. In this question, the design limit is not violated; however, the knowledge of the design limit is tested by calculating the rate, comparing it to Tech Specs, and making the determination that design limits were not violated. LCO 3.4.3 action statement is a less than 1 hour TS, thus it is required closed book knowledge.

ANSWER / DISTRACTOR ANALYSIS
A. Incorrect. Plausible because applicant may note that the LCO is applicable "at all times", but then realize that there is no LCO Condition and Required Action that covers Mode 5. LCO 3.0.3 is not a required action for this condition, but the applicant could potentially make that assumption given the wording of Tech Specs.
B. Incorrect. The LCO action is only for Modes 1 -4. Plausible because this would be correct if applicant thought the cooldown rate was violated at 0230 hrs when it had changed by 103 F over the previous hour.
C. Incorrect. The LCO action is only for Modes 1 -4. Plausible because this would be correct if the plant was still in Mode 4 due to the P being too high for 100 F.
D. Correct. Action C applies during Mode 5, which is where the plant is when the C/D rate is violated.

REFERENCES TO BE PROVIDED: Tech Spec Section 3.4.3, Tech Spec Basis Section 3.4.3, PTRM Section 2.0.

REFERENCES
1. Tech Spec 3.4.3, RCS Pressure and Temperature (P/T) Limits
2. Tech Spec Basis 3.4.3
3. Pressure Temperature Limits Report

MCS	Time:	1	Points:	1.00	Version:	0 1 2 3 4 5 6 7 8 9	
					Answer:	D C A C D D B A B A	Scramble Range: A - D
Tier:		2			Group:	1	
Key Word:		COOLDOWN RHR			Cog Level:	C/A 3.5	
Source:		N			Exam:	VG05301	
Test:		R			Author/Reviewer:	MAB/RSB	

6. 005A1.01 001

Unit 1 has just completed a cooldown via the RHR system. The following data was collected:

Today is May 27.

Time (hrs)	RCS Temperature (°F)	RCS Pressure (psig)
0100	300	350
0115	275	350
0130	250	350
0145	228	350
0200	200	350
0215	182	350
0230	147	350
0245	130	350
0300	100	350

Which ONE of the following correctly states the actions required by Technical Specifications? (Reference provided)

A. No Technical Specification REQUIRED ACTION covers the plant conditions. Enter LCO 3.0.3.

B. Perform Technical Specification required actions to restore parameters to within limits within 30 minutes. The RCS must be determined to be acceptable for continued operation by May 30 at 0230 hours.

C. Perform Technical Specification required actions to restore parameters to within limits within 30 minutes. The RCS must be determined to be acceptable for continued operation by May 30 at 0300 hours.

D. Perform Technical Specification required actions to immediately begin restoring parameters to within limits.

K/A
005 Residual Heat Removal
A1.07 Ability to predict and / or monitor changes in parameters (to prevent exceeding design limits) associated with operating the RHRS controls including: Heatup/cooldown rates.

K/A MATCH ANALYSIS
The cooldown is being accomplished via RHRS controls. The question tests the applicants ability to calculate the cooldown rate which is a skill needed to monitor the cooldown rate and prevent exceeding the cooldown rate limit. The cooldown rate is a design limit with brittle failure as its basis. In this question, the design limit is not violated; however, the knowledge of the design limit is tested by calculating the rate, comparing it to Tech Specs, and making the determination that design limits were not violated. LCO 3.4.3 action statement is a less than 1 hour TS, thus it is required closed book knowledge.

ANSWER / DISTRACTOR ANALYSIS
A. Incorrect. Plausible because applicant may note that the LCO is applicable "at all times", but then realize that there is no LCO Condition and Required Action that covers Mode 5. LCO 3.0.3 is not a required action for this condition, but the applicant could potentially make that assumption given the wording of Tech Specs.
B. Incorrect. The LCO action is only for Modes 1 -4. Plausible because this would be correct if applicant thought the cooldown rate was violated at 0230 hrs when it had changed by 103 F over the previous hour.
C. Incorrect. The LCO action is only for Modes 1 -4. Plausible because this would be correct if the plant was still in Mode 4 due to the P being too high for 100 F.
D. Correct. Action C applies during Mode 5, which is where the plant is when the C/D rate is violated.

REFERENCES TO BE PROVIDED: Tech Spec Section 3.4.3, Tech Spec Basis Section 3.4.3, PTRM Section 2.0.

REFERENCES
1. Tech Spec 3.4.3, RCS Pressure and Temperature (P/T) Limits
2. Tech Spec Basis 3.4.3
3. Pressure Temperature Limits Report

MCS	Time:	1	Points:	1.00	Version:	0 1 2 3 4 5 6 7 8 9	
					Answer:	D C A C D D B A B A	Scramble Range: A - D
Tier:		2			Group:	1	
Key Word:		COOLDOWN RHR			Cog Level:	C/A 3.5	
Source:		N			Exam:	VG05301	
Test:		R			Author/Reviewer:	MAB/RSB	

1. 005A1.01 001

Unit 1 has just ~~commenced~~ completed a cooldown via the RHR system. ~~RCS pressure is constant at 350 psig throughout the cooldown~~. The following data was collected:

Today is May 27.

Time (hrs)	Temperature (°F)	P
0100	300	350 psig
0115	275	
0130	250	
0145	228	
0200	200	
0215	182	
0230	147	
0245	130	
0300	100	

Which ONE of the following correctly states the actions, ~~if any~~, required by Technical Specifications? (Reference provided)

A. No Technical Specification REQUIRED ACTION covers the plant conditions. Enter LCO 3.0.3.

B. Perform Technical Specification required actions to restore parameters to within limits within 30 minutes. The RCS must be determined to be acceptable for continued operation by May 30 at 0230 hours.

C. Perform Technical Specification required actions to restore parameters to within limits within 30 minutes. The RCS must be determined to be acceptable for continued operation by May 30 at 0300 hours.

D. Perform Technical Specification required actions to immediately begin restoring parameters to within limits.

K/A
005 Residual Heat Removal
A1.07 Ability to predict and / or monitor changes in parameters (to prevent exceeding design limits) associated with operating the RHRS controls including: Heatup/cooldown rates.

K/A MATCH ANALYSIS
The cooldown is being accomplished via RHRS controls. The question tests the applicants ability to calculate the cooldown rate which is a skill needed to monitor the cooldown rate and prevent exceeding the cooldown rate limit. The cooldown rate is a design limit with brittle failure as its basis. In this question, the design limit is not violated; however, the knowledge of the design limit is tested by calculating the rate, comparing it to Tech Specs, and making the determination that design limits were not violated. LCO 3.4.3 action statement is a less than 1 hour TS, thus it is required closed book knowledge.

ANSWER / DISTRACTOR ANALYSIS
A. Incorrect. Plausible because applicant may note that the LCO is applicable "at all times", but then realize that there is no LCO Condition and Required Action that covers Mode 5. LCO 3.0.3 is not a required action for this condition, but the applicant could potentially make that assumption given the wording of Tech Specs.
B. Incorrect. The LCO action is only for Modes 1 -4. Plausible because this would be correct if applicant thought the cooldown rate was violated at 0230 hrs when it had changed by 103 F over the previous hour.
C. Incorrect. The LCO action is only for Modes 1 -4. Plausible because this would be correct if the plant was still in Mode 4 due to the P being too high for 100 F.
D. Correct. Action C applies during Mode 5, which is where the plant is when the C/D rate is violated.

REFERENCES TO BE PROVIDED: Tech Spec Section 3.4.3, Tech Spec Basis Section 3.4.3, PTRM Section 2.0.

REFERENCES
1. Tech Spec 3.4.3, RCS Pressure and Temperature (P/T) Limits
2. Tech Spec Basis 3.4.3
3. Pressure Temperature Limits Report

MCS	Time:	1	Points:	1.00	Version:	0 1 2 3 4 5 6 7 8 9	
					Answer:	D C A C D D B A B A	Scramble Range: A - D
Tier:		2			Group:	1	
Key Word:		COOLDOWN RHR			Cog Level:	C/A 3.5	
Source:		N			Exam:	VG05301	
Test:		R			Author/Reviewer:	MAB/RSB	

1. 005A1.01 001

Unit 1 has just commenced a cooldown via the RHR system. RCS pressure is constant at 350 psig throughout the cooldown. The following data has been collected:

Today is May 27.

Time (hrs)	Temperature (°F)
0100	300
0115	275
0130	250
0145	228
0200	200
0215	182
0230	147
0245	130
0300	100

Which ONE of the following correctly states the actions, if any, required by Technical Specifications? (Reference provided)

A. LCO 3.4.3 is not met, yet no REQUIRED ACTION covers the plant conditions. Enter LCO 3.0.3.

B. Condition A of LCO 3.4.3 is not met. Perform REQUIRED ACTIONs A.1 and A.2. The RCS must be determined to be acceptable for continued operation by May 30 at 0230 hours.

C. Condition A of LCO 3.4.3 is not met. Perform REQUIRED ACTIONs A.1 and A.2. The RCS must be determined to be acceptable for continued operation by May 30 at 0300 hours.

D. There are no LCO REQUIRED ACTIONs as a result of the cooldown.

K/A
005 Residual Heat Removal
A1.07 Ability to predict and / or monitor changes in parameters (to prevent exceeding design limits) associated with operating the RHRS controls including: Heatup/cooldown rates.

K/A MATCH ANALYSIS
The cooldown is being accomplished via RHRS controls. The question tests the applicants ability to calculate the cooldown rate which is a skill needed to monitor the cooldown rate and prevent exceeding the cooldown rate limit. The cooldown rate is a design limit with brittle failure as its basis. In this question, the design limit is not violated; however, the knowledge of the design limit is tested by calculating the rate, comparing it to Tech Specs, and making the determination that design limits were not violated.

ANSWER / DISTRACTOR ANALYSIS
A. Incorrect. Plausible because applicant may note that the LCO is applicable "at all times", but then realize that there is not LCO Condition and Required Action that covers Mode 5. LCO 3.0.3 is not a required action for this condition, but the applicant could potentially make that assumption given the wording of Tech Specs.
B. Incorrect. The LCO action is only for Modes 1 -4. Plausible because this would be correct if applicant thought the cooldown rate was violated at 0230 hrs when it had changed by 103 F over the previous hour.
C. Incorrect. The LCO action is only for Modes 1 -4. Plausible because this would be correct if the plant was still in Mode 4 due to the P being too high for 100 F.
D. Correct. The LCO action is only for Modes 1 -4.

REFERENCES TO BE PROVIDED: Tech Spec Section 3.4.3, Tech Spec Basis Section 3.4.3, PTRM Section 2.0.

REFERENCES
1. Tech Spec 3.4.3, RCS Pressure and Temperature (P/T) Limits
2. Tech Spec Basis 3.4.3
3. Pressure Temperature Limits Report

MCS	Time:	1	Points:	1.00	Version:	0 1 2 3 4 5 6 7 8 9	
					Answer:	D C A C D D B A B A	Scramble Range: A - D
Tier:		2			Group:	1	
Key Word:		COOLDOWN RHR			Cog Level:	C/A 3.5	
Source:		N			Exam:	VG05301	
Test:		R			Author/Reviewer:	MAB/RSB	

Table 1.1-1 (page 1 of 1)
MODES

MODE	TITLE	REACTIVITY CONDITION (k_{eff})	% RATED THERMAL POWER[a]	AVERAGE REACTOR COOLANT TEMPERATURE (°F)
1	Power Operation	≥ 0.99	> 5	NA
2	Startup	≥ 0.99	≤ 5	NA
3	Hot Standby	< 0.99	NA	≥ 350
4	Hot Shutdown[b]	< 0.99	NA	350 > T_{avg} > 200
5	Cold Shutdown[b]	< 0.99	NA	≤ 200
6	Refueling[c]	NA	NA	NA

(a) Excluding decay heat.

(b) All reactor vessel head closure bolts fully tensioned.

(c) One or more reactor vessel head closure bolts less than fully tensioned.

VOGTLE ELECTRIC GENERATING PLANT (VEGP) - UNIT 1
PRESSURE AND TEMPERATURE LIMITS REPORT

1.0 Reactor Coolant System (RCS) Pressure and Temperature Limits Report (PTLR) - Unit 1

This PTLR for VEGP Unit 1 has been prepared in accordance with the requirements of Technical Specification (TS) 5.6.6. The TS addressed in this report are listed below:

LCO 3.4.3 RCS Pressure and Temperature (P/T) Limits

LCO 3.4.12 Cold Overpressure Protection Systems (COPS)

2.0 Operating Limits

The parameter limits for the specifications listed in section 1.0 are presented in the following subsections. The current limits were developed using a methodology that is in accordance with the NRC-approved methodology specified in Specification 5.6.6 (Ref. 1) with two exceptions. The two exceptions are the fluence methodology used to calculate the heatup and cooldown limits and the incorporation of random pressure uncertainty in the cold overpressure protection system setpoints. Future changes to these limits will be made in full compliance with the NRC-approved methodology, and the first revision to the limits after initial implementation of this PTLR will be submitted to the NRC for prior approval. Subsequent revisions will be made in accordance with the NRC-approved methodology without prior approval. It should be noted that the heatup and cooldown limit curves and the cold overpressure protection system setpoints were approved by the NRC staff by Amendment 87 dated June 8, 1995.

2.1 RCS Pressure and Temperature (P/T) Limits (LCO 3.4.3)

2.1.1 The RCS temperature rate-of-change limits are (Ref. 2):

a. A maximum heatup of 100 °F in any 1-hour period.

b. A maximum cooldown of 100 °F in any 1-hour period.

c. A maximum temperature change of less than or equal to 10 °F in any 1-hour period during inservice hydrostatic and leak testing operations above the heatup and cooldown limit curves.

2.1.2 The RCS P/T limits for heatup and cooldown are specified by Figures 2.1-1 and 2.1-2, respectively.

VOGTLE ELECTRIC GENERATING PLANT (VEGP) - UNIT 1
PRESSURE AND TEMPERATURE LIMITS REPORT

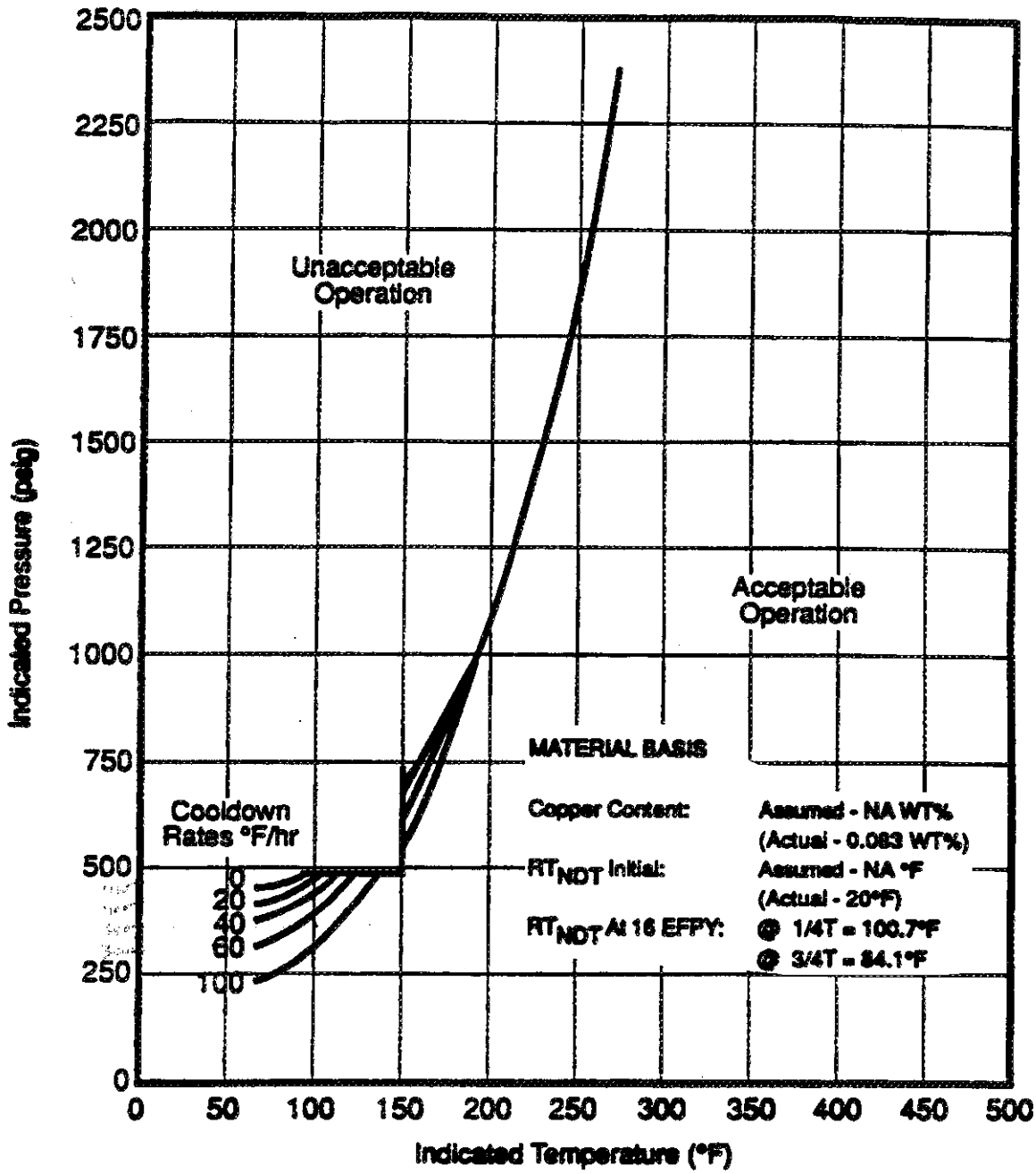

Figure 2.1-2

Unit 1 Reactor Coolant System Cooldown Limitations (Cooldown Rates up to 100°F/hr)
Applicable for the First 16 EFPY
(With Margins of 10°F and 60 psig for Instrumentation Errors and Margin of 74 psig for Pressure Difference Between Pressure Instrumentation and Reactor Vessel Beltline Region)

Table 2.1-2
Data Points for Unit 1 Reactor Coolant System Cooldown Limitations

Steady State		20 CD		40 CD		60 CD		100 CD	
T	P	T	P	T	P	T	P	T	P
70	441.06	70	401.75	70	361.89	70	321.34	70	238.56
75	449.91	75	410.96	75	371.60	75	331.70	75	250.28
80	459.29	80	420.95	80	382.15	80	342.88	80	262.93
85	469.52	85	431.74	85	393.56	85	354.98	85	276.69
90	480.51	90	443.33	90	405.83	90	367.93	90	291.47
95	487.00	95	455.84	95	418.98	95	382.03	95	307.58
100	487.00	100	469.15	100	433.25	100	397.22	100	324.90
105	487.00	105	483.64	105	448.66	105	413.54	105	343.74
110	487.00	110	487.00	110	465.11	110	431.24	110	364.07
115	487.00	115	487.00	115	483.00	115	450.35	115	385.99
120	487.00	120	487.00	120	487.00	120	470.81	120	409.73
125	487.00	125	487.00	125	487.00	125	487.00	125	435.30
130	487.00	130	487.00	130	487.00	130	487.00	130	462.87
135	487.00	135	487.00	135	487.00	135	487.00	135	487.00
140	487.00	140	487.00	140	487.00	140	487.00	140	487.00
145	487.00	145	487.00	145	487.00	145	487.00	145	487.00
150	487.00	150	487.00	150	487.00	150	487.00	150	487.00
150	697.52	150	674.44	150	652.71	150	632.35	150	597.16
155	725.51	155	704.35	155	684.91	155	666.93	155	637.55
160	755.50	160	736.74	160	719.47	160	704.15	160	681.03
165	787.98	165	771.39	165	756.69	165	744.45	165	727.95
170	822.71	170	808.59	170	796.90	170	787.66	170	778.47
175	859.97	175	848.62	175	840.01	175	834.17	175	832.90
180	900.00	180	891.83	180	886.37	180	884.17	180	891.46
185	943.02	185	938.13	185	936.26	185	937.98		
190	989.43	190	987.88						
195	1038.93								
200	1092.31								
205	1149.67								
210	1211.10								
215	1276.80								
220	1347.74								
225	1423.41								
230	1504.91								
235	1591.99								
240	1685.30								
245	1785.26								
250	1892.15								
255	2006.55								
260	2128.76								
265	2259.41								
270	2398.54								

3.4 REACTOR COOLANT SYSTEM (RCS)

3.4.3 RCS Pressure and Temperature (P/T) Limits

LCO 3.4.3 RCS pressure, RCS temperature, and RCS heatup and cooldown rates shall be maintained within the limits specified in the PTLR.

APPLICABILITY: At all times.

ACTIONS

CONDITION	REQUIRED ACTION		COMPLETION TIME
A. ----------NOTE---------- Required Action A.2 shall be completed whenever this Condition is entered. ---------- Requirements of LCO not met in MODE 1, 2, 3, or 4.	A.1	Restore parameter(s) to within limits.	30 minutes
	AND		
	A.2	Determine RCS is acceptable for continued operation.	72 hours
B. Required Action and associated Completion Time of Condition A not met.	B.1	Be in MODE 3.	6 hours
	AND		
	B.2	Be in MODE 5 with RCS pressure < 500 psig.	36 hours

(continued)

ACTIONS (continued)

CONDITION	REQUIRED ACTION	COMPLETION TIME
C. ----------NOTE---------- Required Action C.2 shall be completed whenever this Condition is entered. ---------- Requirements of LCO not met any time in other than MODE 1, 2, 3, or 4.	C.1 Initiate action to restore parameter(s) to within limits.	Immediately
	AND	
	C.2 Determine RCS is acceptable for continued operation.	Prior to entering MODE 4

SURVEILLANCE REQUIREMENTS

SURVEILLANCE		FREQUENCY
SR 3.4.3.1	----------NOTE---------- Only required to be performed during RCS heatup and cooldown operations and RCS inservice leak and hydrostatic testing. ---------- Verify RCS pressure, RCS temperature, and RCS heatup and cooldown rates are within the limits specified in the PTLR.	30 minutes

B 3.4 REACTOR COOLANT SYSTEM (RCS)

B 3.4.3 RCS Pressure and Temperature (P/T) Limits

BASES

BACKGROUND

All components of the RCS are designed to withstand effects of cyclic loads due to system pressure and temperature changes. These loads are introduced by startup (heatup) and shutdown (cooldown) operations, power transients, and reactor trips. This LCO limits the pressure and temperature changes during RCS heatup and cooldown, within the design assumptions and the stress limits for cyclic operation.

The PTLR contains P/T limit curves for heatup, cooldown, inservice leak and hydrostatic (ISLH) testing, and data for the maximum rate of change of reactor coolant temperature.

Each P/T limit curve defines an acceptable region for normal operation. The usual use of the curves is operational guidance during heatup or cooldown maneuvering, when pressure and temperature indications are monitored and compared to the applicable curve to determine that operation is within the allowable region.

The LCO establishes operating limits that provide a margin to brittle failure of the reactor vessel and piping of the reactor coolant pressure boundary (RCPB). The vessel is the component most subject to brittle failure, and the LCO limits apply mainly to the vessel. The limits do not apply to the pressurizer, which has different design characteristics and operating functions.

10 CFR 50, Appendix G (Ref. 1), requires the establishment of P/T limits for specific material fracture toughness requirements of the RCPB materials. Reference 1 requires an adequate margin to brittle failure during normal operation, anticipated operational occurrences, and system hydrostatic tests. It mandates the use of the American Society of Mechanical Engineers (ASME) Code, Section III, Appendix G (Ref. 2).

The neutron embrittlement effect on the material toughness is reflected by increasing the nil ductility reference temperature (RT_{NDT}) as exposure to neutron fluence increases.

(continued)

BASES

BACKGROUND (continued)

The actual shift in the RT_{NDT} of the vessel material will be established periodically by removing and evaluating the irradiated reactor vessel material specimens, in accordance with ASTM E 185 (Ref. 3) and Appendix H of 10 CFR 50 (Ref. 4). The operating P/T limit curves will be adjusted, as necessary, based on the evaluation findings and the recommendations of Regulatory Guide 1.99 (Ref. 5).

The P/T limit curves are composite curves established by superimposing limits derived from stress analyses of those portions of the reactor vessel and head that are the most restrictive. At any specific pressure, temperature, and temperature rate of change, one location within the reactor vessel will dictate the most restrictive limit. Across the span of the P/T limit curves, different locations are more restrictive, and, thus, the curves are composites of the most restrictive regions.

The heatup curve represents a different set of restrictions than the cooldown curve because the directions of the thermal gradients through the vessel wall are reversed. The thermal gradient reversal alters the location of the tensile stress between the outer and inner walls.

The criticality limit curve includes the Reference 1 requirement that it be ≥ 40°F above the heatup curve or the cooldown curve, and not less than the minimum permissible temperature for ISLH testing. However, the criticality curve is not operationally limiting; a more restrictive limit exists in LCO 3.4.2, "RCS Minimum Temperature for Criticality."

The consequence of violating the LCO limits is that the RCS has been operated under conditions that can result in brittle failure of the RCPB, possibly leading to a nonisolable leak or loss of coolant accident. In the event these limits are exceeded, an evaluation must be performed to determine the effect on the structural integrity of the RCPB components. The ASME Code, Section XI, Appendix E (Ref. 6), provides a recommended methodology for evaluating an operating event that causes an excursion outside the limits.

(continued)

BASES (continued)

APPLICABLE SAFETY ANALYSES

The P/T limits are not derived from Design Basis Accident (DBA) analyses. They are prescribed during normal operation to avoid encountering pressure, temperature, and temperature rate of change conditions that might cause undetected flaws to propagate and cause nonductile failure of the RCPB, an unanalyzed condition. Reference 7 establishes the methodology for determining the P/T limits. Although the P/T limits are not derived from any DBA, the P/T limits are acceptance limits since they preclude operation in an unanalyzed condition.

RCS P/T limits satisfy Criterion 2 of 10 CFR 50.36 (c)(2)(ii).

LCO

The two elements of this LCO are:

a. The limit curves for heatup, cooldown, and ISLH testing; and

b. Limits on the rate of change of temperature.

The LCO limits apply to all components of the RCS, except the pressurizer. These limits define allowable operating regions and permit a large number of operating cycles while providing a wide margin to nonductile failure.

The limits for the rate of change of temperature control the thermal gradient through the vessel wall and are used as inputs for calculating the heatup, cooldown, and ISLH testing P/T limit curves. Thus, the LCO for the rate of change of temperature restricts stresses caused by thermal gradients and also ensures the validity of the P/T limit curves.

Violating the LCO limits places the reactor vessel outside of the bounds of the stress analyses and can increase stresses in other RCPB components. The consequences depend on several factors, as follow:

a. The severity of the departure from the allowable operating P/T regime or the severity of the rate of change of temperature;

(continued)

BASES

LCO (continued)

b. The length of time the limits were violated (longer violations allow the temperature gradient in the thick vessel walls to become more pronounced); and

c. The existences, sizes, and orientations of flaws in the vessel material.

APPLICABILITY

The RCS P/T limits LCO provides a definition of acceptable operation for prevention of nonductile failure in accordance with 10 CFR 50, Appendix G (Ref. 1). Although the P/T limits were developed to provide guidance for operation during heatup or cooldown (MODES 3, 4, and 5) or ISLH testing, their Applicability is at all times in keeping with the concern for nonductile failure. The limits do not apply to the pressurizer.

During MODES 1 and 2, other Technical Specifications provide limits for operation that can be more restrictive than or can supplement these P/T limits. LCO 3.4.1, "RCS Pressure, Temperature, and Flow Departure from Nucleate Boiling (DNB) Limits"; LCO 3.4.2, "RCS Minimum Temperature for Criticality"; and Safety Limit 2.1, "Safety Limits," also provide operational restrictions for pressure and temperature and maximum pressure. Furthermore, MODES 1 and 2 are above the temperature range of concern for nonductile failure, and stress analyses have been performed for normal maneuvering profiles, such as power ascension or descent.

ACTIONS

A.1 and A.2

Operation outside the P/T limits during MODE 1, 2, 3, or 4 must be corrected so that the RCPB is returned to a condition that has been verified by stress analyses.

The 30 minute Completion Time reflects the urgency of restoring the parameters to within the analyzed range. Most violations will not be severe, and the activity can be accomplished in this time in a controlled manner.

Besides restoring operation within limits, an evaluation is required to determine if RCS operation can continue. The

(continued)

BASES

ACTIONS

A.1 and A.2 (continued)

evaluation must verify the RCPB integrity remains acceptable and must be completed before continuing operation. Several methods may be used, including comparison with pre-analyzed transients in the stress analyses, new analyses, or inspection of the components.

ASME Code, Section XI, Appendix E (Ref. 6), may be used to support the evaluation. However, its use is restricted to evaluation of the vessel beltline.

The 72 hour Completion Time is reasonable to accomplish the evaluation. The evaluation for a mild violation is possible within this time, but more severe violations may require special, event specific stress analyses or inspections. A favorable evaluation must be completed before continuing to operate.

Condition A is modified by a Note requiring Required Action A.2 to be completed whenever the Condition is entered. The Note emphasizes the need to perform the evaluation of the effects of the excursion outside the allowable limits. Restoration alone per Required Action A.1 is insufficient because higher than analyzed stresses may have occurred and may have affected the RCPB integrity.

B.1 and B.2

If a Required Action and associated Completion Time of Condition A are not met, the plant must be placed in a lower MODE because either the RCS remained in an unacceptable P/T region for an extended period of increased stress or a sufficiently severe event caused entry into an unacceptable region. Either possibility indicates a need for more careful examination of the event, best accomplished with the RCS at reduced pressure and temperature. In reduced pressure and temperature conditions, the possibility of propagation with undetected flaws is decreased.

If the required restoration activity cannot be accomplished within 30 minutes, Required Action B.1 and Required Action B.2 must be implemented to reduce pressure and temperature.

(continued)

BASES

ACTIONS

B.1 and B.2 (continued)

If the required evaluation for continued operation cannot be accomplished within 72 hours or the results are indeterminate or unfavorable, action must proceed to reduce pressure and temperature as specified in Required Action B.1 and Required Action B.2. A favorable evaluation must be completed and documented before returning to operating pressure and temperature conditions.

Pressure and temperature are reduced by bringing the plant to MODE 3 within 6 hours and to MODE 5 with RCS pressure < 500 psig within 36 hours.

The allowed Completion Times are reasonable, based on operating experience, to reach the required plant conditions from full power conditions in an orderly manner and without challenging plant systems.

C.1 and C.2

Actions must be initiated immediately to correct operation outside of the P/T limits at times other than when in MODE 1, 2, 3, or 4, so that the RCPB is returned to a condition that has been verified by stress analysis.

The immediate Completion Time reflects the urgency of initiating action to restore the parameters to within the analyzed range. Most violations will not be severe, and the activity can be accomplished in this time in a controlled manner.

Besides restoring operation within limits, an evaluation is required to determine if RCS operation can continue. The evaluation must verify that the RCPB integrity remains acceptable and must be completed prior to entry into MODE 4. Several methods may be used, including comparison with pre-analyzed transients in the stress analyses, or inspection of the components.

ASME Code, Section XI, Appendix E (Ref. 6), may be used to support the evaluation. However, its use is restricted to evaluation of the vessel beltline.

(continued)

BASES

ACTIONS

C.1 and C.2 (continued)

Condition C is modified by a Note requiring Required Action C.2 to be completed whenever the Condition is entered. The Note emphasizes the need to perform the evaluation of the effects of the excursion outside the allowable limits. Restoration alone per Required Action C.1 is insufficient because higher than analyzed stresses may have occurred and may have affected the RCPB integrity.

SURVEILLANCE REQUIREMENTS

SR 3.4.3.1

Verification that operation is within the PTLR limits is required every 30 minutes when RCS pressure and temperature conditions are undergoing planned changes. This Frequency is considered reasonable in view of the control room indication available to monitor RCS status. Also, since temperature rate of change limits are specified in hourly increments, 30 minutes permits assessment and correction for minor deviations within a reasonable time.

Surveillance for heatup, cooldown, or ISLH testing may be discontinued when the definition given in the relevant plant procedure for ending the activity is satisfied.

This SR is modified by a Note that only requires this SR to be performed during system heatup, cooldown, and ISLH testing. No SR is given for criticality operations because LCO 3.4.2 contains a more restrictive requirement.

REFERENCES

1. 10 CFR 50, Appendix G.
2. ASME, Boiler and Pressure Vessel Code, Section III, Appendix G.
3. ASTM E 185-82, July 1982.
4. 10 CFR 50, Appendix H.
5. Regulatory Guide 1.99, Revision 2, May 1988.

(continued)

BASES

REFERENCES (continued)

6. ASME, Boiler and Pressure Vessel Code, Section XI, Appendix E.

7. WCAP-14040, Revision 2, January 1996.

INITIALS

b. UNIT 2:

(1) Train A: 2HS-6506A in DISABLE (Aux Relay Panel 2ACPAR6) ____/____ IV

(2) Train B: 2HS-6506B in DISABLE (Aux Relay Panel 2BCPAR7) ____/____ IV

(3) Train C: OPEN Breaker 2CD1M05 (Steam Admission Valve, 2HV-5106) ____/____ IV

(4) Train C: OPEN 2CD1M05-K2 Link ____/____ IV

c. PLACE standby MDAFW Pumps hand switch in PULL-TO-LOCK: _____

(1) MDAFW pumps can be used to feed SGs as required by either starting the applicable pump or by opening the pump discharge cross connect valve.

(2) If pump(s) and/or the cross connect valve are used as described above, document status with CAUTION TAG.

d. If the TDAFW Pump is not in use, CLOSE HV-5122, 5125, 5127 and 5120. _____

CAUTION

If only one train of RHR is available, the only available RHR train should remain aligned for ECCS injection and the cool down to 250°F continued using the steam generators.

C4.2.12 If desired, when the RCS pressure is less than 365 psig (PI-0403 and/or PI-0405), and RCS temperature is less than 340°F, PLACE only one RHR Loop in operation per 13011, "Residual Heat Removal System". (CO 147, CO 1407, CO 1716, CO 3209, CO 3301, CO 3314, CO 44125) _____

RHR loops may be placed 1/4 when < 365 psig.

a. OPERATE RHR HX Outlet Valve, HV-0606(0607), and Bypass Valve, FV-0618(0619), to control RCS temperature as necessary and RHR flow at a minimum total flow of 3000 gpm, _____

7. 006A2.11 001

The following Unit 1 conditions exist:

- Operators have initiated 19221-C, FR-C.1, "Response to Inadequate Core Cooling"
- The 'A' Safety Injection Pump (Intermediate Head Safety Injection) is not available
- The 'B' Safety Injection Pump (Intermediate Head Safety Injection) flow rate is 800 gpm.
- RVLIS Full Range Level is 28% and slowly lowering
- Core Exit Thermocouples are 720°F and slowly rising
- RCS pressure is 1800 psig
- NR Steam Generator levels are 35% and slowly rising
- Reactor Coolant Pumps have been secured

Which ONE of the following would be the next major action to mitigating the core cooling challenge?

A. Depressurize all intact steam generators using steam dumps or ARVs to depressurize RCS down to the SI accumulator and SI injection pressures.

B. Depressurize the RCS down to the SI accumulator and SI injection pressures by opening available pressurizer PORVs.

C. Restart one RCP in a loop with an intact steam generator to provide forced two-phase flow for initiating RCS depressuization.

D. Allow Intermediate Head Safety Injection to continue adding inventory, which will cool the RCS.

K/A
006 Emergency Core Cooling
A2.11 Ability to (a) predict the impacts of the following malfunctions or operations on the ECCS; and (b) based on those predictions, use procedures to correct, control, or mitigate the consequences of those malfunctions or operations: Rupture of ECCS header.

K/A MATCH ANALYSIS
SI Pump flow indicating high when RCS pressure is above their shutoff head provides positive indication of an ECCS rupture. The procedural strategy to mitigate the above conditions is to depress the RCS via the SGs. Therefore, at a minimum, part (b) of the K/A is met by testing the procedural strategy of mitigating the ECCS break.

ANSWER / DISTRACTOR ANALYSIS
A. Correct. 19221-C, Step 11, Page 10, provides direction to depress all intact SGs to 200 psig using either dumps (preferred) or ARVs. Parameters for the stem were chosen to reflect a Red Path leading to Inadequate Core Cooling. Safety Injection Pump flow and amps are indicative of runout conditions, yet the RCS pressure is above where injection would occur. SG parameters were chosen to allow for dump and/or ARV use.
B. Incorrect. Use of PORVs would result in more RCS inventory loss and is therefore a less desireable option. (LO-LP-37061-10, Page 5) Opening PORVs and starting RCPs would only be attempted if depressing SGs was unsuccessful. Plausible because this is actually an option if depressing SGs is ineffective.
C. Incorrect. See B above.
D. Incorrect. As stated above, indications of an ECCS rupture are present, which preclude injection via Intermediate Head SI. Plausible because flow is indicated.

NOTE: This is considered an RO question because it does not test procedural transition or detailed knowledge of procedural steps. The question may be successfully answered by only knowing strategic knowledge of what to do in an inadequate core cooling situation.

REFERENCES
1. VG01301 Exam, Question 074EK1.03: Question modified for this exam.
2. 19221-C, FR-C.1 Response to Inadequate Core Cooling, Rev. 17.1, 08/27/2003.
3. ECCS Lesson Plan, Chapter 13, Rev. 2.0.
4. Lesson Plan LO-LP-37061-10, Rev. 10, 01/21/2002.
5. 19200-C, F-0 Critical Safey Function Status Trees, Rev. 19, 02/25/2004.

MCS	Time:	1	Points:	1.00	Version:	0 1 2 3 4 5 6 7 8 9	
					Answer:	A B B C C C D A A B	Scramble Range: A - D
Tier:		2			Group:	1	
Key Word:		HPSI CORE COOLING			Cog Level:	C/A 4.0	
Source:		B			Exam:	VG05301	
Test:		R			Author/Reviewer:	MAB/RSB	

7. 006A2.11 001

The following Unit 1 conditions exist:

- Operators have initiated 19221-C, FR-C.1, "Response to Inadequate Core Cooling"
- The 'A' Safety Injection Pump (Intermediate Head Safety Injection) is not available
- The 'B' Safety Injection Pump (Intermediate Head Safety Injection) flow rate is 800 gpm.
- RVLIS Full Range Level is 28% and slowly lowering
- Core Exit Thermocouples are 720°F and slowly rising
- RCS pressure is 1800 psig
- NR Steam Generator levels are 35% and slowly rising
- Reactor Coolant Pumps have been secured

Which ONE of the following would be the next major action to mitigating the core cooling challenge?

A.✓ Depressurize all intact steam generators using steam dumps or ARVs to depressurize RCS down to the SI accumulator and SI injection pressures.

B. Depressurize the RCS down to the SI accumulator and SI injection pressures by opening available pressurizer PORVs.

C. Restart one RCP in a loop with an intact steam generator to provide forced two-phase flow for initiating RCS depressuization.

D. Allow Intermediate Head Safety Injection to continue adding inventory, which will cool the RCS.

K/A
006 Emergency Core Cooling
A2.11 Ability to (a) predict the impacts of the following malfunctions or operations on the ECCS; and (b) based on those predictions, use procedures to correct, control, or mitigate the consequences of those malfunctions or operations: Rupture of ECCS header.

K/A MATCH ANALYSIS
SI Pump flow indicating high when RCS pressure is above their shutoff head provides positive indication of an ECCS rupture. The procedural strategy to mitigate the above conditions is to depress the RCS via the SGs. Therefore, at a minimum, part (b) of the K/A is met by testing the procedural strategy of mitigating the ECCS break.

ANSWER / DISTRACTOR ANALYSIS
A. Correct. 19221-C, Step 11, Page 10, provides direction to depress all intact SGs to 200 psig using either dumps (preferred) or ARVs. Parameters for the stem were chosen to reflect a Red Path leading to Inadequate Core Cooling. Safety Injection Pump flow and amps are indicative of runout conditions, yet the RCS pressure is above where injection would occur. SG parameters were chosen to allow for dump and/or ARV use.
B. Incorrect. Use of PORVs would result in more RCS inventory loss and is therefore a less desireable option. (LO-LP-37061-10, Page 5) Opening PORVs and starting RCPs would only be attempted if depressing SGs was unsuccessful. Plausible because this is actually an option if depressing SGs is ineffective.
C. Incorrect. See B above.
D. Incorrect. As stated above, indications of an ECCS rupture are present, which preclude injection via Intermediate Head SI. Plausible because flow is indicated.

NOTE: This is considered an RO question because it does not test procedural transition or detailed knowledge of procedural steps. The question may be successfully answered by only knowing strategic knowledge of what to do in an inadequate core cooling situation.

REFERENCES
1. VG01301 Exam, Question 074EK1.03: Question modified for this exam.
2. 19221-C, FR-C.1 Response to Inadequate Core Cooling, Rev. 17.1, 08/27/2003.
3. ECCS Lesson Plan, Chapter 13, Rev. 2.0.
4. Lesson Plan LO-LP-37061-10, Rev. 10, 01/21/2002.
5. 19200-C, F-0 Critical Safey Function Status Trees, Rev. 19, 02/25/2004.

MCS	Time:	1	Points:	1.00	Version:	0 1 2 3 4 5 6 7 8 9	
					Answer:	A B B C C C D A A B	Scramble Range: A - D
Tier:		2			Group:	1	
Key Word:		HPSI CORE COOLING			Cog Level:	C/A 4.0	
Source:		B			Exam:	VG05301	
Test:		R			Author/Reviewer:	MAB/RSB	

2. 006A2.11 001

The following Unit 1 conditions exist:

- Operators have ~~just started implementing~~ initiated 19221-C, FR-C.1, "Response to Inadequate Core Cooling"
- The 'A' Safety Injection Pump (Intermediate Head Safety Injection) is not available
- The 'B' Safety Injection Pump (Intermediate Head Safety Injection) flow rate is 800 gpm.
- RVLIS Full Range Level is 28% and slowly lowering
- Core Exit Thermocouples are 720°F and slowly rising
- RCS pressure is 1800 psig
- NR Steam Generator levels are 35% and slowly rising
- Reactor Coolant Pumps have been secured

Which ONE of the following would be the next ~~step~~ major action to mitigating the core cooling challenge?

A. Depressurize all intact steam generators using steam dumps or ARVs to depressurize RCS down to the SI accumulator and SI injection pressures.

B. Depressurize the RCS down to the SI accumulator and SI injection pressures by opening available pressurizer PORVs.

C. Restart one RCP in a loop with an intact steam generator to provide forced two-phase flow for initiating RCS depressuization.

D. Allow Intermediate Head Safety Injection to continue adding inventory, which will cool the RCS.

K/A
006 Emergency Core Cooling
A2.11 Ability to (a) predict the impacts of the following malfunctions or operations on the ECCS; and (b) based on those predictions, use procedures to correct, control, or mitigate the consequences of those malfunctions or operations: Rupture of ECCS header.

K/A MATCH ANALYSIS
SI Pump flow indicating high when RCS pressure is above their shutoff head provides positive indication of an ECCS rupture. The procedural strategy to mitigate the above conditions is to depress the RCS via the SGs. Therefore, at a minimum, part (b) of the K/A is met by testing the procedural strategy of mitigating the ECCS break.

ANSWER / DISTRACTOR ANALYSIS
A. Correct. 19221-C, Step 11, Page 10, provides direction to depress all intact SGs to 200 psig using either dumps (preferred) or ARVs. Parameters for the stem were chosen to reflect a Red Path leading to Inadequate Core Cooling. Safety Injection Pump flow and amps are indicative of runout conditions, yet the RCS pressure is above where injection would occur. SG parameters were chosen to allow for dump and/or ARV use.
B. Incorrect. Use of PORVs would result in more RCS inventory loss and is therefore a less desireable option. (LO-LP-37061-10, Page 5) Opening PORVs and starting RCPs would only be attempted if depressing SGs was unsuccessful. Plausible because this is actually an option if depressing SGs is ineffective.
C. Incorrect. See B above.
D. Incorrect. As stated above, indications of an ECCS rupture are present, which preclude injection via Intermediate Head SI. Plausible because flow is indicated.

NOTE: This is considered an RO question because it does not test procedural transition or detailed knowledge of procedural steps. The question may be successfully answered by only knowing strategic knowledge of what to do in an inadequate core cooling situation.

REFERENCES
1. VG01301 Exam, Question 074EK1.03: Question modified for this exam.
2. 19221-C, FR-C.1 Response to Inadequate Core Cooling, Rev. 17.1, 08/27/2003.
3. ECCS Lesson Plan, Chapter 13, Rev. 2.0.
4. Lesson Plan LO-LP-37061-10, Rev. 10, 01/21/2002.
5. 19200-C, F-0 Critical Safey Function Status Trees, Rev. 19, 02/25/2004.

MCS	Time:	1	Points:	1.00	Version:	0 1 2 3 4 5 6 7 8 9	
					Answer:	A B B C C C D A A B	Scramble Range: A - D
Tier:		2			Group:	1	
Key Word:		HPSI CORE COOLING			Cog Level:	C/A 4.0	
Source:		B			Exam:	VG05301	
Test:		R			Author/Reviewer:	MAB/RSB	

Sheet 1 of 1

F- 0.2
CORE COOLING

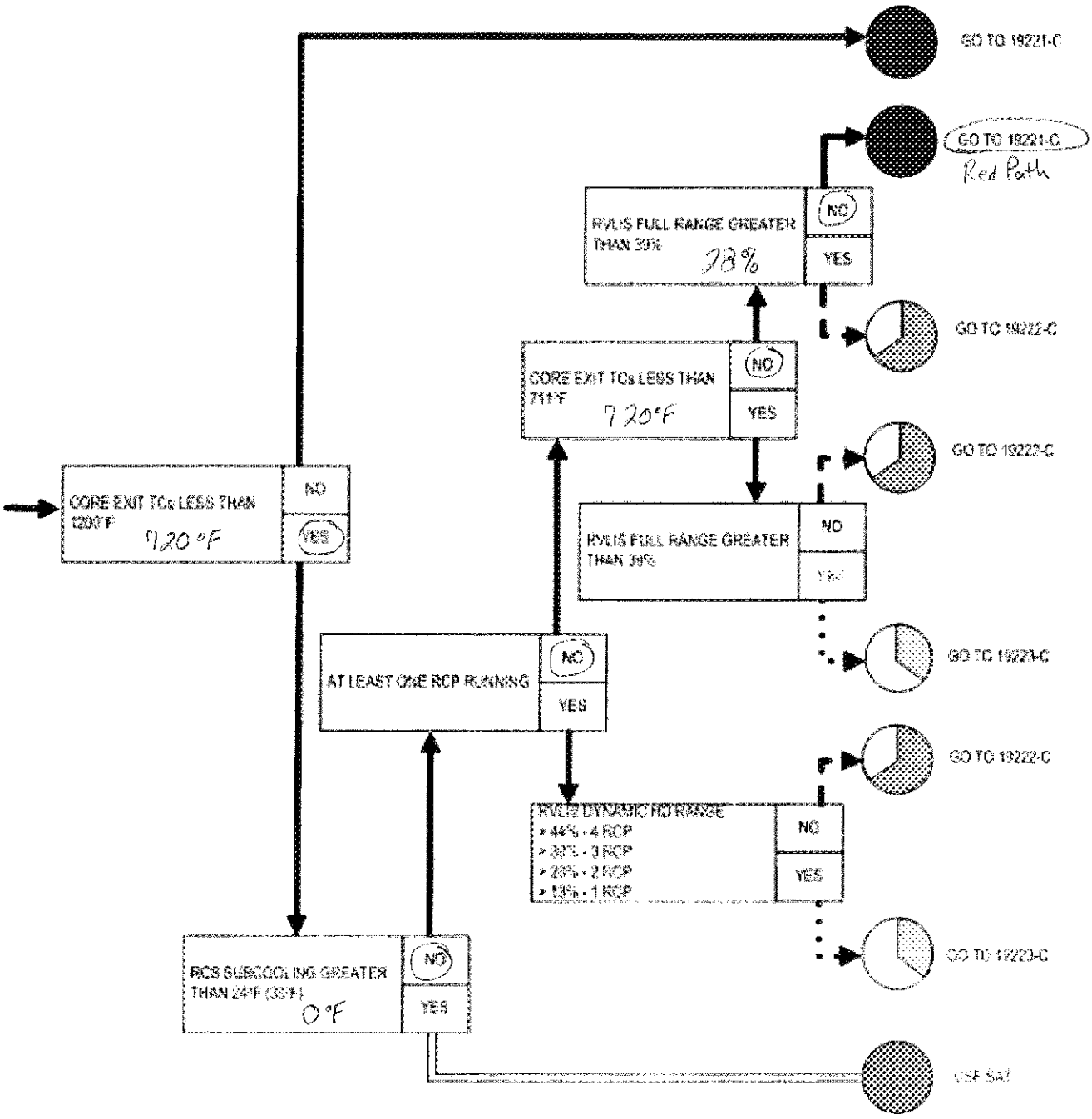

EMERGENCY OPERATING PROCEDURE

FR-C.1 RESPONSE TO INADEQUATE CORE COOLING

PURPOSE

PRB REVIEW REQUIRED

This procedure provides actions to restore core cooling. (Applicable in Modes 1, 2, and 3.)

MAJOR ACTIONS

- Establish Safety Injection Flow To the RCS
- Rapidly Depressurize SGs to Depressurize RCS
- Start RCPs and Open All RCS Vent Paths to Containment

ENTRY CONDITIONS

- 19200-C, F-0.2 CORE COOLING CSFST on either RED condition.

ACTION/EXPECTED RESPONSE	RESPONSE NOT OBTAINED

CAUTION:

- If RWST level lowers to less than 39%, ECCS should be aligned for cold leg recirculation by initiating 19013-C, ES-1.3 TRANSFER TO COLD LEG RECIRCULATION.
- RHR pumps should not be run longer than 30 minutes without CCW to the RHR Pump seal coolers and heat exchangers.

NOTE:

91001-C EMERGENCY CLASSIFICATION AND IMPLEMENTING INSTRUCTIONS should be implemented at this time.

* 1. Verify ECCS valve alignment - PROPER INJECTION LINEUP INDICATED ON MLBs.	* 1. Align valves as necessary using ATTACHMENTS A, B, and C.

ACTION/EXPECTED RESPONSE	RESPONSE NOT OBTAINED

CAUTION: If offsite power is lost after SI reset, action is required to restart the following ESF equipment if plant conditions require their operation:

- RHR pumps
- SI Pumps
- Post-LOCA cavity purge units
- Containment coolers in low speed (started in high speed on a UV signal)
- ESF chilled water pumps (if CRI has been reset)

2. Verify ECCS flow:

a. CCP flow indicators - CHECK FOR BIT FLOW.

a. Start pumps and align valves as necessary using ATTACHMENT A.

IF CCP flow NOT verified, THEN:

1) Reset SI

2) Start the NCP

b. SI flow indicators - CHECK FOR FLOW.

Offscale High 300 gpm

b. Start pumps and align valves as necessary using ATTACHMENT B.

c. RHR flow indicators - CHECK FOR FLOW.

None

c. Start pumps and align valves as necessary using ATTACHMENT C.

3. Check RCP support conditions using ATTACHMENT D - AVAILABLE.

3. Attempt to establish support conditions using ATTACHMENT D.

4. Check SI accumulator isolation valve status:

a. ACCUM ISO VLVS - OPEN:

- HV-8808A
- HV-8808B
- HV-8808C
- HV-8808D

a. IF not shut due to accumulator discharge, THEN open accumulator valves.

ACTION/EXPECTED RESPONSE	RESPONSE NOT OBTAINED
5. Check core exit TCs - LESS THAN 1200°F. 820°F	5. Go to Step 8. OBSERVE NOTES PRIOR TO STEP 8.
6. Check RVLIS full range indication:	
a. RCPs - NONE RUNNING	a. Return to procedure and step in effect.
b. Full range indication - GREATER THAN 39%. 28% No and lowering	b. IF indication rising, THEN return to Step 1. OBSERVE CAUTIONS AND NOTE PRIOR TO STEP 1. IF indication NOT rising, THEN go to Step 7.
c. Return to procedure and step in effect.	
7. Check core exit TCs:	
a. Temperature - LESS THAN 711°F. 820°F 720 and rising No	a. IF indication lowering, THEN return to Step 1. OBSERV CAUTIONS AND NOTE PRIOR TO STEP 1. IF indication NOT lowering, THEN go to Step 8. OBSERVE NOTES PRIOR TO STEP 8.
b. Return to procedure and step in effect.	

ACTION/EXPECTED RESPONSE	RESPONSE NOT OBTAINED

NOTE:

- This procedure should be continued while obtaining the hydrogen sample in Step 8.
- Operation of Hydrogen Recombiners may cause a rise in containment pressure.

*8. Check containment hydrogen concentration:	
a. Place the containment hydrogen analyzers in service by initiating 13130, POST ACCIDENT HYDROGEN CONTROL.	a. WHEN hydrogen concentration measurement available, THEN go to Step 8b.
b. Check hydrogen concentration - LESS THAN 6.0%.	b. Consult TSC on methods to reduce hydrogen concentration inside containment. WHEN hydrogen concentration less than 6.0%, THEN go to Step 8c. Go to Step 9. OBSERVE CAUTIONS PRIOR TO STEP 9.
c. Check hydrogen concentration - LESS THAN 0.5%.	c. Place hydrogen recombiners in service by initiating 13130, POST ACCIDENT HYDROGEN CONTROL.

ACTION/EXPECTED RESPONSE | RESPONSE NOT OBTAINED

CAUTION:
- Switching to alternate CST by initiating 13610, AUXILIARY FEEDWATER SYSTEM will be necessary when CST level lowers to less than 15%.
- A faulted or ruptured SG should not be used in subsequent steps unless no intact SG is available.

*9 Check intact SG(s) levels:

a. Check NR level - GREATER THAN 10% [32% ADVERSE].

35% and slowly rising.

b. Control feed flow to maintain NR level between 10% [32% ADVERSE] and 65%.

a. IF all SG NR levels less than 10% [32% ADVERSE], THEN maintain total feed flow greater than 570 gpm.

IF total feed flow greater than 570 gpm can NOT be established, THEN continue attempts to establish a heat sink in at least one SG using AFW, MFW, Condensate, or a low pressure water source and go to Step 18. OBSERVE NOTE PRIOR TO STEP 18.

ACTION/EXPECTED RESPONSE	RESPONSE NOT OBTAINED
*10. Check RCS vent paths:	
a. Power to PRZR PORV block valves - AVAILABLE.	a. Restore power to block valves.
b. PRZR PORVs - SHUT.	b. IF PRZR pressure less than 2315 psig, THEN shut PRZR PORVs. IF any PRZR PORV can NOT be shut, THEN shut its block valve.

NOTE: COPS may be disarmed when temperature rises above 350°F and has remained above 290°F (green integrity CSFST.)

c. PRZR PORV Block valves - AT LEAST ONE OPEN.	c. IF NOT shut to isolate an excessively leaking or open PRZR PORV, AND WHEN PRZR pressure is greater than 2185 psig, THEN open at least one PRZR PORV block valve. WHEN RCS WR CL temperatures less than 350°F, THEN arm COPS.

ACTION/EXPECTED RESPONSE	RESPONSE NOT OBTAINED
(Step 10 continued from previous page)	
d. Other RCS vent paths - SHUT:	d. Shut any open RCS vent paths.

- RX HEAD VENT TO LETDOWN ISOLATION VLVs:
  - HV-8095A
  - HV-8095B
  - HV-8096A
  - HV-8096B
- CVCS letdown isolation valves:
  - HV-8149A - LETDOWN ORIFICE 45 GPM
  - HV-8149B - LETDOWN ORIFICE 75 GPM
  - HV-8149C - LETDOWN ORIFICE 75 GPM
  - LV-0459 - LETDOWN ISOLATION VLV DOWNSTREAM
  - LV-0460 - LETDOWN ISOLATION VLV UPSTREAM
- EXCESS LETDOWN LINE ISO VLVs:
  - HV-8153
  - HV-8154

ACTION/EXPECTED RESPONSE RESPONSE NOT OBTAINED

(Step 10 continued from previous page)

- RCS sample valves:
  - HV-3548 - RC HOT LEG - 1&3 SAMPLE - IRC
  - HV-3502 - RC HOT LEG - 1&3 SAMPLE - ORC
  - HV-3513 - PRZR STM SAMPLE - IRC
  - HV-3514 - PRZR STM SAMPLE - ORC
  - HV-3507 - PRZR LIQUID SAMPLE - IRC
  - HV-3508 - PRZR LIQUID SAMPLE - ORC

ACTION/EXPECTED RESPONSE	RESPONSE NOT OBTAINED
NOTE: • Partial uncovering of SG tubes is acceptable in the following steps. • When the low steamline pressure SI signal is blocked, main steamline isolation will occur if the high steam pressure rate setpoint is exceeded.	
*11. Depressurize all intact SG(s) to 200 psig:	
a. Dump steam to condenser from intact SG(s) at maximum rate using steam dumps.	a. Dump steam at maximum rate from the intact SG(s) using SG ARV(s).
b. Check if low steamline pressure SI/SLI should be blocked:	
1) PRZR pressure - LESS THAN 2000 PSIG.	1) WHEN PRZR pressure is less than 2000 PSIG and the high steam pressure rate alarms are clear, THEN block low steamline pressure SI/SLI by performing step 11.b.3).
2) High steam pressure rate alarms - CLEAR	
3) Block low steamline pressure SI/SLI by performing the following: • Momentarily place HS-40068 in the BLOCK position, • Momentarily place HS-40069 in the BLOCK position.	

ACTION/EXPECTED RESPONSE	RESPONSE NOT OBTAINED
(Step 11 continued from previous page)	
c. Check SG pressures - LESS THAN 200 PSIG.	c. IF SG pressures lowering, THEN return to Step 9. IF SG pressures NOT lowering, THEN go to Step 18. OBSERVE NOTE PRIOR TO STEP 18.
d. Check RCS WR hot leg temperatures - AT LEAST TWO LESS THAN 380°F.	d. IF RCS WR hot leg temperatures lowering, THEN return to Step 9. IF RCS WR hot leg temperatures NOT lowering, THEN go to Step 18. OBSERVE NOTE PRIOR TO STEP 18.
e. Stop SG depressurization.	

QUESTIONS REPORT
for Westinghouse 4-Loop Questions

1. 074EK1.03 001

The operating crew entered procedure 19221-C, FR-C.1, "Response to Inadequate Core Cooling." All attempts to establish high pressure safety injection flow were unsuccessful. RVLIS full range level is 28% and decreasing slowly, core exit thermocouples are reading 820 deg F and slowly increasing. Reactor coolant pumps are secured.

Which of the following would be the next step to mitigating the core cooling challenge?

A. Enter the severe accident management guidelines (SAMGs) for guidance on RCP restart to initiate RCS depressurization.

B. Open available Pzr PORVs to depressurize RCS down to the SI accumulator and SI injection pressures.

C. Depressurize all intact steam generators using steam dumps or ARVs to depressurize RCS down to the SI accumulator and SI injection pressures.

D. Restart one RCP in a loop with an intact steam generator to provide forced two-phase flow for initiating RCS depressurization.

C
ref: 19221-C FR-C.1, Response to Inadequate Core Cooling, LO-LP-37061-09,
a. incorrect - does not meet the 1200 deg F transition criteria
b. incorrect - action results in a loss of RCS inventory to accomplish depressurization
c. correct
d. incorrect - RCP is eventually started but it is not next step after high pressure SI is not successful
vogtle 1999 exam

RO Tier:	T1G1	SRO Tier:	T1G1
K/A Value:	3.7/3.9	Cog. Level:	MEMORY
Source:	BANK	Exam:	VG01301
Test:	BOTH	Misc:	KFO27

ALB05 below contains the Group 1 through 5 "MONITOR LIGHT COMP OFF NORM" for the system components that are monitored **for their proper alignment.**

Normally both trains of ECCS are expected to respond to a safety injection signal(SIS), which will result in the status lights providing the proper indication for each group. However, if one train fails to automatically align, as evidenced by the status lights not changing indication, then the reactor operator is expected to manually actuate SI.

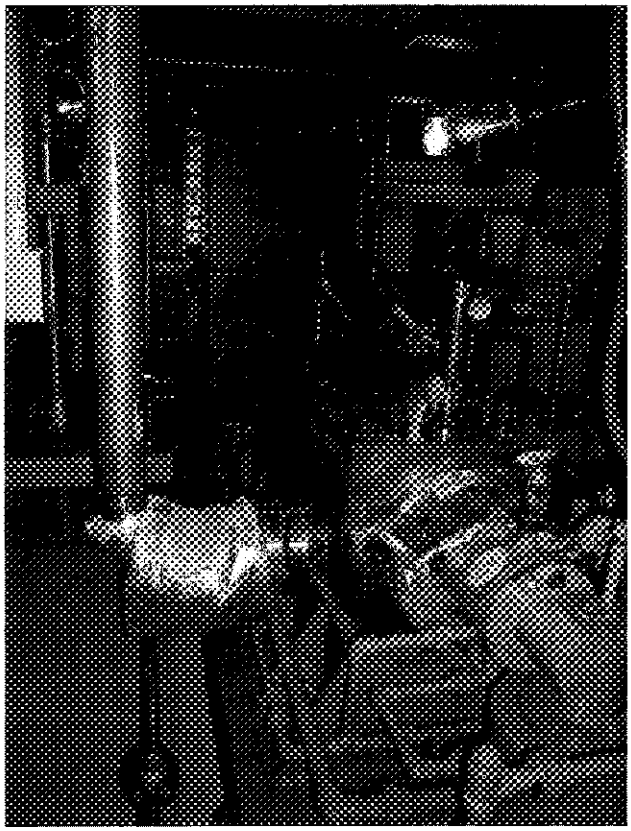

13.4 INTERMEDIATE HEAD SAFTEY INJECTION

The Safety Injection System is the next ECCS subsystem that would provide injection flow into the RCS as RCS pressure continued to lower. The SI system consists of two independent 100% capacity pumps powered from 4160 volt 1E electrical busses, AA02 and BA03 respectively. These pumps are located on level B of the Auxiliary Building. NSCW provides cooling to the two motor and pump bearing coolers. Control is from the main control room normally, with local control available at the shutdown panel.

The Safety Injection System pump flow path is designed to supply borated water to either the cold or hot leg connections on all four loops of the RCS. During the injection phase following a LOCA, the SI pumps take borated water from the RWST and pump it through a common header and four branch lines. Each one of these branch lines then joins a single penetration into a RCS cold leg which is also shared with an accumulator discharge line and the RHR pump discharge branch line. Injection begins when the RCS pressure has decreased below the shutoff head of the SI pumps, which approximately 1625 psig. Rated flow is approximately 440 gpm at TDH of 1160 psid. SI pump flow and discharge pressure indications are on the QMCB and the IPC.

For Each ECCS branch line contains manual adjusted throttle valves which are set during testing for three reasons:

* To prevent ECCS pump runout
* To equalize flow through the branch lines
* To minimize the quantity of coolant lost if one of the injection lines ruptures and spills into the containment

Below is a simplified drawing of the SI system in standby alignment.

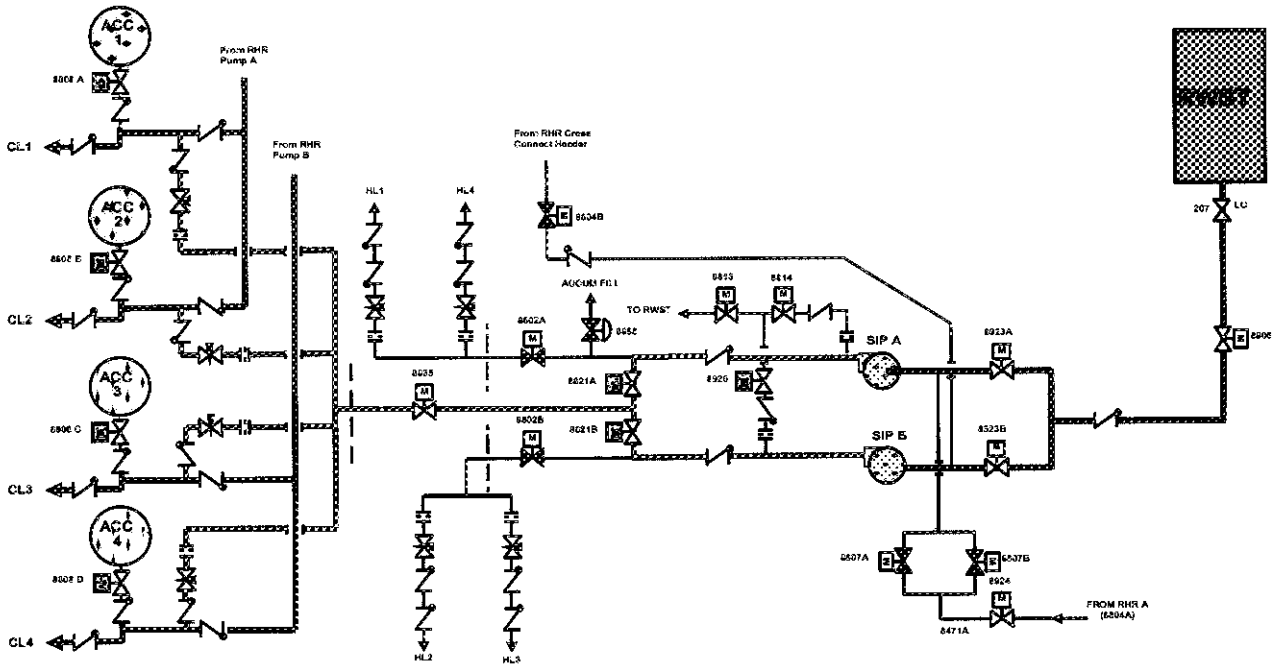

From the above simplified drawing, one can see that both trains share a common suction isolation valve HV-8806. Each pump has a suction isolation valve (HV-8823A/B). The valve alignment shows a flow path that directs flow to the RCS cold legs through HV-8821A/B and a common cold leg isolation valve HV-8835. However if a small break LOCA occurs such that RCS pressure was greater than the shutoff head of the SIPs, the pumps are protected by a mini flow path return line to the RWST through individual pump isolation valves HV-8814 and HV-8920, which combine into a single header which has a common isolation valve, HV-8813. The individual mini flow valve is powered from train "A" 1E 480 VAC while the common isolation valve is supplied from train "B" 1E 480 VAC. As we will discuss later, this arrangement of having isolation valves supplied by 1E power in a series arrangement means that isolation of the flow path can be accomplished with a loss of one train of 1E electrical power. The simplified drawing below shows these valve arrangements.

2) With CETCs above 711°F superheat at the core exit is indicated

3) At this coolant level and with CETCs greater than 711°F an inadequate core cooling condition has been reached

3. If either core cooling red path conditions exist, the operators are directed to Procedure 19221, "Response to Inadequate Core Cooling". The use of these actions is intended to be minimized since they are extraordinary and beyond the original design basis of the equipment or could lead to jeopardizing other Critical Safety Functions.

B. Vogtle Procedure 19221 was developed from Westinghouse Function Guideline (FRG) FR-C.1, "Response to Inadequate Core Cooling"

1. The purpose of this procedure is to provide actions to restore core cooling — Objective 1

2. The major action steps to be performed in 19221 are: — LO-TP-37061-005

a. Reinitiate high pressure SI

b. Rapid depressurization of the secondary

c. Restart RCPs and/or open PORVs and vents

3. These actions are done in order and the effectiveness of each is evaluated prior to performing the next

4. The preferred means of establishing core cooling is with high head safety injection.

a. If this is ineffective or unavailable, the secondary side of the plant is rapidly depressurized.

1. These actions will cool and depressurize the RCS, allowing the accumulators to dump and low head SI to inject.

2. Considered more effective in reducing RCS pressure than opening PORVs if the RCS is highly voided, and also does not result in additional RCS inventory losses.

b. The third action, starting RCPs and opening PORVs, is done only if the first two are ineffective in restoring core cooling.

1. Starting RCPs will provide temporary core

cooling while the operators proceed with measures to restore SI or a heat sink.

2. Opening PORVs and vents will allow the RCS to be depressurized.

c. The procedure is exited when core cooling has been restored.

C. Major Action Steps (have students follow in 19221) — Objective 2

1. Reinitiate high pressure SI — Steps 1 - 7

a. Injection of subcooled RWST causes steam in cold legs to condense. Steam flow throughout the RCS will increase as a result of this condensation effect. — Ensure students know how to each step of procedure

b. Superheated steam forced out of the core may initially cause CETCs to increase.

c. As the vessel begins to refill heat transfer from the fuel will cause the fluid entering the core to boil vigorously. This will create a two phase frothy mixture which will eventually recover the entire core and cause CETCs to decrease to saturation temperature of the RCS.

d. Effectiveness of SI to restore RCS inventory is determined by RVLIS <u>trending</u> up (Note: RVLIS level may fluctuate as the core refloods)

e. Effectiveness of SI to cool core is measured by CETC

f. If level and temp are satisfactory procedure can be exited

2. Rapid depressurization of secondary side — Steps 8 - 17

a. Rapid depressurization will increase primary to secondary heat transfer

1) Causes steam in tubes to condense

b. When condensation rate exceeds steam generator rate (in core) RCS pressure will drop

c. When pressure drops any water left in lower plenum of vessel will flash to steam

1) Partially recovers core with frothy two phase mixture

d. Continued RCS depressurization will cause SI accumulator injection and temporary core recovery. Accumulators are isolated after injection to prevent nitrogen injection which would reduce effectiveness of secondary heat sink.

e. Check the RCS hot leg temperature trends to determine effectiveness of SG depressurization in reducing RCS pressure.

f. CETC and hot leg temperatures may initially increase as superheated steam is forced out of core by the advancing froth but should quickly decrease to saturation and continue to decrease as RCS depressurizes.

g. Continued SG depressurization to atmospheric conditions will enhance low-head SI injection flow

h. If temperature and inventory are satisfied, exit procedure

3. RCP restart and/or opening pressurizer PORVs

Steps 18-24

a. Starting RCPs will provide forced two-phase flow through core and temporarily improve core cooling. CETCs should rapidly decrease and RVLIS dynamic range should rapidly increase as a steam-water mixture is forced through the core by the RCPs.

Normal conditions not required for starting RCPs

b. RCPs are only started in this step if there is sufficient water level in their associated SG to protect the steam generator tubes from creep rupture failure

SAMG Phenomena

c. RCPs will maintain core cooling as long as they continue to run with a secondary heat sink available. However, degraded core cooling conditions still exist.

d. RCPs will not run indefinitely under highly voided RCS conditions. Therefore, still required to:

1) Reduce RCS pressure

2) Inject SI accumulators

3) Increase SI flow - low head SI pumps

e. If unable to reduce RCS pressure via S/G's only option is to enlarge hole in RCS to reduce pressure

1) Open PORVs

2) Open reactor lead vents

3) Establish letdown flow through relief valves

f. This causes inventory loss and is not as effective as using S/G depressurization

4. SAMG Transition — Step 20

a. If core exit temperatures are greater than 1200 degrees F and rising when the operator reaches this step and all actions to reduce core exit temperatures have not been successful, this indicates that core damage cannot be prevented and a transition to the SAMGs is warranted. — SACRG-1

D. Caution Statements (not previously covered) — Objective 3

1. If RWST level lowers to less than 39%, the SI system should be aligned for cold leg recirculation by initiating 19013-C, ES-1.3 "Transfer to Cold Leg Recirculation"

a. This will maintain sufficient cooling flow to the core and remainder of RWST available for spray pump usage

2. RHR pumps should not be run longer than 30 minutes without CCW to the RHR heat exchangers

a. RCS pressure may be above RHR shutoff head and without injection flow or CCW cooling they may be damaged due to excessive heatup

3. A faulted or ruptured SG should not be used in subsequent steps unless no intact SG is available

a. To minimize potential radioactive releases to the atmosphere during the subsequent RCS cooldown. Depressurizing a ruptured SG may create a path to the atmosphere for release of radioactive materials. In addition, a faulted SG has probably already depressurized. Therefore, to obtain the most effective RCS depressurization, intact SGs should be used if available. If no intact SGs are available, this permits the operator to feed a faulted S/G or steam a ruptured S/G.

4. Switching to alternate CST by initiating 13610, AUXILIARY FEEDWATER SYSTEM will be necessary when CST level lowers to less than 15%.

a. To alert you that CST level should be monitored,

III. LESSON OUTLINE:	NOTES
I. INTRODUCTION	
A. The Critical Safety Function Status Tree (CSFST) forcore Cooling monitors the state of fuel cladding heat removal based on RCS subcooling, pressure, temperature, RVLIS level, and RCP status. An extreme challenge to the fuel matrix and fuel cladding exists when the conditions for a core cooling CSFST red path are met. In this case, immediate operator action is necessary to minimize fuel damage.	
B. Present Lesson Objectives	LO-TP-37001-001
II. PRESENTATION	
A. The CSFST for core cooling is one of the critical safety functions used to protect the fuel matrix and fuel cladding. A core cooling red path is an indication of an inadequate core cooling condition. This condition is most likely the result of a LOCA in conjunction with multiple equipment failures or events.	LO-TP-37061-004
1. An inadequate core cooling condition is defined as a high temperature state in the core which has exceeded design basis accident acceptance criteria and where operator action is required to prevent core damage from occurring	Objective 4
2. The core cooling red path can be reached in two ways:	
a. Core exit TCs greater than 1200°F	Objective 5
1) Analysis by Westinghouse shows that CETCs greater than 1200°F is satisfactory criteria for extreme operator action	
2) At least 5 CETCs should be reading greater than 1200°F to allow for thermocouples failed high	See Reference 2
3) This temperature shows that most core inventory is removed from the RCS and decay heat is superheating steam in the core	
28% b. The second red path condition is RVLIS less than 39% with CETCs greater than 711°F and no RCPs running 720°F	
1) RVLIS at 39% corresponds with a coolant level of 3-1/2 feet above the bottom of the active fuel in the core	See Reference 2

8. 007A3.01 001

Unit 1 conditions are as follows:

- PRZR PRESS CNTL SELECT Switch is selected to 457 / 456
- Reactor is at 100% Rated Thermal Power
- PT-456 (Pressurizer Pressure Transmitter) has failed off scale high
- No operator actions have been taken
- At a later time Pressurizer Relief Tank (PRT) Parameters indicate:
  - Pressure = 1 psig
  - Temperature = 216 °F
  - Level = 90%

Which ONE of the following correctly states the current status of the Reactor and the PRT?

A. Reactor trips on low pressurizer pressure. PRT rupture disks have blown.

B. Reactor does not trip. PRT rupture disks have blown.

C. Reactor trips on low pressurizer pressure. PRT rupture disks have not blown.

D. Reactor does not trip. PRT rupture disks have not blown.

K/A
007 Pressurizer Relief/Quench Tank
A3.01 Ability to monitor automatic operation of the PRTS, including: Components which discharge to the PRT.

K/A MATCH ANALYSIS
An automatic function of the PRT is to have rupture disks blow at 100 psig. This is being tested because the PRT parameters, namely 2 psig, are evidence that the PRT has had rupture disks blown. Components that discharge to the PRT are being tested because the high failure of the PT causes a PORV to lift and cycle around the setpoint.

ANSWER / DISTRACTOR ANALYSIS
A. Incorrect. Rx does not trip. Plausible because the applicant may think that the PORV will fail open and stay open, thus leading to a low pzr press rx trip.
B. Correct. PRT temp and press are high and pressure is low, which is indicative of a disk rupture. Also the failure will cause the PV-456A to open until pzr press drops to 2185 psig at which time it closes due to the interlock. The PORV will then cycle around the interlock setpt of 2185 psig. Therefore, with no operator action, the PORV will eventually fill the PRT and cause the rupture disk to blow, but the interlock will prevent a reactor trip on low pzr pressure.
C. Incorrect. Rx does not trip and parameters are indicative of disk being blown. Plausible because the applicant may think that the PORV will fail open and stay open and may not realize that the low PRT press in conjunction with high temp and level is indication of disk rupture.
D. Incorrect. Parameters are indicative of disk being blown. Plausible because the applicant may not realize that the low PRT press in conjunction with high temp and level is indication of disk rupture.

REFERENCES
1. System Operating Procedure 13004-1, Pressurizer Relief Tank Operation, Rev. 9, 09/18/2003.
2. Lesson Plan V-LO-TX-16001, Primary Systems Lesson Plan, Chapter 16, Rev. 3, Page 99.

NOTES:
Question was classified as modified because of its similarity to the lesson plan question and the fact that there is likely a question in a bank for Vogtle or some other Westinghouse plant that has this PT failure.

MCS Time: 1 Points: 1.00 Version: 0 1 2 3 4 5 6 7 8 9
Answer: B C C C A C A C D A Scramble Range: A - D

Tier:	2	Group:	1
Key Word:	PRT PRESSURIZER	Cog Level:	C/A 2.7
Source:	M	Exam:	VG05301
Test:	R	Author/Reviewer:	MAB/RSB

8. 007A3.01 001

Unit 1 conditions are as follows:

- PRZR PRESS CNTL SELECT Switch is selected to 457 / 456
- Reactor is at 100% Rated Thermal Power
- PT-456 (Pressurizer Pressure Transmitter) has failed off scale high
- No operator actions have been taken
- At a later time Pressurizer Relief Tank (PRT) Parameters indicate:
  - Pressure = 1 psig
  - Temperature = 216 °F
  - Level = 90%

Which ONE of the following correctly states the current status of the Reactor and the PRT?

A. Reactor trips on low pressurizer pressure. PRT rupture disks have blown.

B. Reactor does not trip. PRT rupture disks have blown.

C. Reactor trips on low pressurizer pressure. PRT rupture disks have not blown.

D. Reactor does not trip. PRT rupture disks have not blown.

K/A
007 Pressurizer Relief/Quench Tank
A3.01 Ability to monitor automatic operation of the PRTS, including: Components which discharge to the PRT.

K/A MATCH ANALYSIS
An automatic function of the PRT is to have rupture disks blow at 100 psig. This is being tested because the PRT parameters, namely 2 psig, are evidence that the PRT has had rupture disks blown. Components that discharge to the PRT are being tested because the high failure of the PT causes a PORV to lift and cycle around the setpoint.

ANSWER / DISTRACTOR ANALYSIS
A. Incorrect. Rx does not trip. Plausible because the applicant may think that the PORV will fail open and stay open, thus leading to a low pzr press rx trip.
B. Correct. PRT temp and press are high and pressure is low, which is indicative of a disk rupture. Also the failure will cause the PV-456A to open until pzr press drops to 2185 psig at which time it closes due to the interlock. The PORV will then cycle around the interlock setpt of 2185 psig. Therefore, with no operator action, the PORV will eventually fill the PRT and cause the rupture disk to blow, but the interlock will prevent a reactor trip on low pzr pressure.
C. Incorrect. Rx does not trip and parameters are indicative of disk being blown. Plausible because the applicant may think that the PORV will fail open and stay open and may not realize that the low PRT press in conjunction with high temp and level is indication of disk rupture.
D. Incorrect. Parameters are indicative of disk being blown. Plausible because the applicant may not realize that the low PRT press in conjunction with high temp and level is indication of disk rupture.

REFERENCES
1. System Operating Procedure 13004-1, Pressurizer Relief Tank Operation, Rev. 9, 09/18/2003.
2. Lesson Plan V-LO-TX-16001, Primary Systems Lesson Plan, Chapter 16, Rev. 3, Page 99.

NOTES:
Question was classified as modified because of its similarity to the lesson plan question and the fact that there is likely a question in a bank for Vogtle or some other Westinghouse plant that has this PT failure.

MCS Time: 1 Points: 1.00 Version: 0 1 2 3 4 5 6 7 8 9
Answer: B C C C A C A C D A Scramble Range: A - D

Tier:	2	Group:	1
Key Word:	PRT PRESSURIZER	Cog Level:	C/A 2.7
Source:	M	Exam:	VG05301
Test:	R	Author/Reviewer:	MAB/RSB

3. 007A3.01 001

Unit 1 conditions are as follows:

- PRZR PRESS CNTL SELECT Switch is selected to 457 / 456
- Reactor is at 100% Rated Thermal Power
- PT-456 (Pressurizer Pressure Transmitter) ~~fails high~~ has failed off scale high.
- Pressurizer Relief Tank (PRT) Parameters are:
  - Pressure = 1 psig
  - Temperature = 240 °F → 216°F
  - Level = 90%

At a later time,

~~Assuming no operator action,~~ Which ONE of the following correctly states the status of the Reactor and the PRT?

A. Reactor trips on low pressurizer pressure. PRT rupture disks have blown.

B. Reactor does not trip. PRT rupture disks have blown.

C. Reactor trips on low pressurizer pressure. PRT rupture disks have not blown.

D. Reactor does not trip. PRT rupture disks have not blown.

No Operator Actions have been taken.

K/A
007 Pressurizer Relief/Quench Tank
A3.01 Ability to monitor automatic operation of the PRTS, including: Components which discharge to the PRT.

K/A MATCH ANALYSIS
An automatic function of the PRT is to have rupture disks blow at 100 psig. This is being tested because the PRT parameters, namely 2 psig, are evidence that the PRT has had rupture disks blown. Components that discharge to the PRT are being tested because the high failure of the PT causes a PORV to lift and cycle around the setpoint.

ANSWER / DISTRACTOR ANALYSIS
A. Incorrect. Rx does not trip. Plausible because the applicant may think that the PORV will fail open and stay open, thus leading to a low pzr press rx trip.
B. Correct. PRT temp and press are high and pressure is low, which is indicative of a disk rupture. Also the failure will cause the PV-456A to open until pzr press drops to 2185 psig at which time it closes due to the interlock. The PORV will then cycle around the interlock setpt of 2185 psig. Therefore, with no operator action, the PORV will eventually fill the PRT and cause the rupture disk to blow, but the interlock will prevent a reactor trip on low pzr pressure.
C. Incorrect. Rx does not trip and parameters are indicative of disk being blown. Plausible because the applicant may think that the PORV will fail open and stay open and may not realize that the low PRT press in conjunction with high temp and level is indication of disk rupture.
D. Incorrect. Parameters are indicative of disk being blown. Plausible because the applicant may not realize that the low PRT press in conjunction with high temp and level is indication of disk rupture.

REFERENCES
1. System Operating Procedure 13004-1, Pressurizer Relief Tank Operation, Rev. 9, 09/18/2003.
2. Lesson Plan V-LO-TX-16001, Primary Systems Lesson Plan, Chapter 16, Rev. 3, Page 99.

NOTES:
Question was classified as modified because of its similarity to the lesson plan question and the fact that there is likely a question in a bank for Vogtle or some other Westinghouse plant that has this PT failure.

MCS Time: 1 Points: 1.00 Version: 0 1 2 3 4 5 6 7 8 9
Answer: B C C C A C A C D A Scramble Range: A - D

Tier:	2	Group:	1
Key Word:	PRT PRESSURIZER	Cog Level:	C/A 2.7
Source:	M	Exam:	VG05301
Test:	R	Author/Reviewer:	MAB/RSB

specified in the system operating procedures. The purpose of maintaining the steam bubble in the pressurizer is so that reactor coolant system pressure is not allowed to fall below the reactor coolant pumps' minimum operating pressure. When the reactor coolant system cool down is completed, the steam bubble in the pressurizer can be collapsed. This is accomplished by spraying the steam bubble with cool water from the Chemical and Volume Control System (Auxiliary Spray) while increasing charging flow. The spray flow is continued after the pressurizer vessel is full of water and the pressurizer internal temperature equals the reactor coolant system temperature.

ABNORMAL OPERATION

Pressurizer Pressure Control responses:

Example #1

With the Pressurizer Pressure Control Selector Switch selected to 457/456 position, PT-456 fails high.

Response:

- PORV PV-456A opens. This reduces pressurizer pressure
- Pressurizer pressure master controller responses by closing the pressurizer spray valves and signals for maximum heater power all 4 banks.
- Pressurizer heaters are not able to maintain pressure under this condition, so when pressurizer pressure drops to 2185 psig both PORVs and the block valve receive a close signal from the Solid State Protection System (SSPS).
- Pressurizer pressure will remain approximately 2185 psig as the PORV PV-456A cycles on the PORV interlock since no operator action is taken.

Alarms received during this instrument failure:

- ALB11-C03 "PRZR HI PRESS CHANNEL ALERT"
- ALB12-F04 "PV-0456A OPEN SIGNAL"
- ALB12-D03 "PRZR PRESS LO PORV BLOCK" INTERMITTENTLY
- ALB12-E01 "PRZR RELIEF DISCH HI TEMP" OVER TIME

Example #2

Unit 2 is 100% power with all control systems in automatic. Pressurizer Pressure Control Selector Switch is selected to 457/456 position. If PT-457 fails high this is what the plant response will be if no operator actions are performed.

Response:

- PORV 2-PV-455A opens. This reduces pressurizer pressure.

- Pressurizer Spray valves fully open, Pressurizer heaters cut back to minimum.

1.0 **PURPOSE**

This procedure provides the necessary instructions for operation of the Pressure Relief Tank (PRT) and supporting equipment. Procedure instructions include the following:

4.1.2 Placing The PRT In Service

4.2.1 Pressure Control Of The PRT

4.2.2 Level Control Of The PRT

4.4.1 Purging The PRT To Containment And Filling The PRT

4.4.2 Purging The PRT To The WGS And Filling The PRT

4.4.3 PRT Cooldown Using Spray And Drain (One Hour Cooldown)

4.4.4 PRT Cooldown Using RCDT Heat Exchanger (Eight Hour Cooldown)

4.4.5 Draining The PRT

NOTE

Operations that involve a continuous supply of N2 to the PRT, such as RCS draining, will require PRT N2 Supply Isolation Valves 1-HV-8033 and 1-HV-8047 to remain open for the duration of the operation.

4.1.2.5 ESTABLISH a nitrogen atmosphere in the PRT by aligning N2 and verifying proper pressure regulator function:

a. OPEN PRT N2 SPLY ISO VALVES 1-HV-8033 and 1-HV-8047,

b. ENSURE RCS NITROGEN SUPPLY TO PRT 1-PCV-8034 maintains 3-5 psig as indicated by PRESSURIZER RELIEF TANK 1-PI-0469,

c. CLOSE 1-HV-8033 and 1-HV-8047, if not required for continuous supply.

4.1.2.6 ESTABLISH 60-80% water level in the PRT by filling or draining as follows:

a. Filling:

(1) OPEN PRT FILL ISO VLV 1-HV-8030 to establish a level of 60-80% as indicated by PRESSURIZER RELIEF TANK 1-LI-0470,

(2) During filling, MAINTAIN PRT N2 pressure at 3-5 psig as indicated by PRESSURIZER RELIEF TANK 1-PI-0469,

b. Draining:

(1) If necessary, DRAIN the PRT per Section 4.4.5 of this procedure to establish a PRT level of 60-80% as indicated by 1-LI-0470.

4.2 **SYSTEM OPERATION**

4.2.1 **Pressure Control Of The PRT**

NOTES

a. Pressure increases in the PRT may be the result of a temperature increase or level increase.

b. Pressure of the PRT may be reduced by:

(1) Filling the PRT which will spray down the gas space of the tank,

(2) Draining the PRT which will increase the volume of gas space,

(3) Venting the PRT to the Gaseous Waste Processing System.

4.2.1.1 High PRT Pressure

a. MONITOR PRESSURIZER RELIEF TANK 1-LI-0470 and 1-TI-0468 to determine the cause of the pressure increase,

b. If pressure increase is due to increasing temperature, COOL by spray as follows:

(1) At an increasing pressure of 8 psig as indicated on 1-PI-0469, OPEN PRT FILL ISO VLV 1-HV-8030,

(2) At 5 psig, CLOSE 1-HV-8030,

(3) If necessary, DRAIN the PRT per Section 4.4.5 of this procedure to maintain 60-80% level.

c. If pressure increase is due to increasing level, DRAIN the PRT per Section 4.4.5 of this procedure to restore the PRT pressure to 3-5 psig,

d. If venting of the PRT to the Gaseous Waste Processing System is desired, VENT the PRT per 13201-1, "Gaseous Waste Processing System".

4.2.1.2 Low PRT Pressure

a. At a lowering pressure of 2 psig as indicated by 1-PI-0469, REPRESSURIZE with N2 as follows:

(1) OPEN PRT N2 SPLY ISO VALVES 1-HV-8047 and 1-HV-8033,

(2) ENSURE RCS NITROGEN SUPPLY TO PRT 1-PCV-8034 increases the pressure to 3-5 psig,

(3) At a pressure of 3-5 psig, CLOSE 1-HV-8033 and 1-HV-8047.

4.2.2 **Level Control Of The PRT**

4.2.2.1 OPEN the PRT Fill Isolation 1-HV-8030 as necessary to maintain 60-80% level in the PRT.

4.2.2.2 If necessary, DRAIN the PRT per Section 4.4.5 of this procedure to maintain 60-80% level in the PRT.

4.3 **SHUTDOWN**

NONE

1.4 **NON-PERIODIC OPERATION**

4.4.1 **Purging The PRT To Containment And Filling The PRT**

NOTES

a. This section can be used if (1) the PRT is to be filled with water, or (2) the PRT Pressure Boundary has to be breached and the PRT atmosphere can be vented to containment.

b. The PRT gas space contents may be purged from the PRT Vent through a hose to the Containment Preaccess Purge Exhaust Unit 1-1506-N7-001 at the Mini-Purge Exhaust Test Connection 1-1506-U4-012 if the Mini-Purge Exhaust Fan is running or the Preaccess Purge Exhaust Test Connection 1-1506-U4-011 if the Normal purge Fan is running.

9. 008A4.01 001

The following conditions exist on Unit 1:

- Reactor is at 30% Rated Thermal Power
- NSCW Pumps 1 and 3 are running
- CCW Pumps 3 and 5 are running
- ACCW Pump 1 is running

CCW Pump 3 trips.

Which ONE of the following annunciators will provide adequate indication of the reason for the pump trip?

A. CCW TRAIN A SURGE TANK LO-LO LEVEL

B. CCW TRAIN A LO FLOW

C. CCW TRAIN A SURGE TK MAKE UP LVL

D. CCW TRAIN A LO HDR PRESS

K/A
008 Component Cooling Water
A4.01 Ability to manually operate and / or monitor in the control room: CCW indications and controls.

K/A MATCH ANALYSIS
Annunciators are being tested as an indication of the reason the CCW pump tripped. The K/A is met by testing knowledge needed to adequately monitor indications that cause the CCW pump to trip.

ANSWER / DISTRACTOR ANALYSIS
A. Correct. LO-LO LEVEL will trip CCW pumps. See 17002-1 Window A05.
B. Incorrect. See 17002-1 Window B06. Plausible because applicant may assume a minimum flow requirement for pump protection.
C. Incorrect. See 17002-1 Window C05. Plausible because applicant may assume loss of suction would be a concern, hence auto pump trip.
D. Incorrect. See 17002-1 Window A06. Plausible because there is an auto action (pump start) associated with the alarm.

REFERENCES
1. Alarm Response Procedure, 17002-1, ALB 02 on Panel 1A1.
2. Vogtle Exam Question LO-LP-10101-06-03.

MCS Time: 1 Points: 1.00 Version: 0 1 2 3 4 5 6 7 8 9
Answer: A D A C B A B A A B Scramble Range: A - D

QUESTIONS REPORT
for VogIte 2005-301 Draft

Tier:	2	Group:	1
Key Word:	CCW PUMP ALARM START	Cog Level:	MEM 3.0
Source:	B	Exam:	VG05301
Test:	R	Author/Reviewer:	MAB/RSB

9. 008A4.01 001

The following conditions exist on Unit 1:

- Reactor is at 30% Rated Thermal Power
- NSCW Pumps 1 and 3 are running
- CCW Pumps 3 and 5 are running
- ACCW Pump 1 is running

CCW Pump 3 trips.

Which ONE of the following annunciators will provide adequate indication of the reason for the pump trip?

A. CCW TRAIN A SURGE TANK LO-LO LEVEL

B. CCW TRAIN A LO FLOW

C. CCW TRAIN A SURGE TK MAKE UP LVL

D. CCW TRAIN A LO HDR PRESS

K/A
008 Component Cooling Water
A4.01 Ability to manually operate and / or monitor in the control room: CCW indications and controls.

K/A MATCH ANALYSIS
Annunciators are being tested as an indication of the reason the CCW pump tripped. The K/A is met by testing knowledge needed to adequately monitor indications that cause the CCW pump to trip.

ANSWER / DISTRACTOR ANALYSIS
A. Correct. LO-LO LEVEL will trip CCW pumps. See 17002-1 Window A05.
B. Incorrect. See 17002-1 Window B06. Plausible because applicant may assume a minimum flow requirement for pump protection.
C. Incorrect. See 17002-1 Window C05. Plausible because applicant may assume loss of suction would be a concern, hence auto pump trip.
D. Incorrect. See 17002-1 Window A06. Plausible because there is an auto action (pump start) associated with the alarm.

REFERENCES
1. Alarm Response Procedure, 17002-1, ALB 02 on Panel 1A1.
2. Vogtle Exam Question LO-LP-10101-06-03.

MCS Time: 1 Points: 1.00 Version: 0 1 2 3 4 5 6 7 8 9
Answer: A D A C B A B A A B Scramble Range: A - D

QUESTIONS REPORT
for Voglte 2005-301 Draft

Tier:	2	Group:	1
Key Word:	CCW PUMP ALARM START	Cog Level:	MEM 3.0
Source:	B	Exam:	VG05301
Test:	R	Author/Reviewer:	MAB/RSB

4. 008A4.01 001

The following conditions exist on Unit 1:

- Reactor is at 30% Rated Thermal Power
- NSCW Pumps 1 and 3 are running
- CCW Pumps 3 and 5 are running
- ACCW Pump 1 is running

CCW Pump 3 trips.

Which ONE of the following annunciators, ~~if in alarm,~~ will provide adequate indication of the reason for the pump trip?

A. CCW TRAIN A SURGE TANK LO-LO LEVEL

B. CCW TRAIN A LO FLOW

C. CCW TRAIN A SURGE TK MAKE UP LVL

D. CCW TRAIN A LO HDR PRESS

K/A
008 Component Cooling Water
A4.01 Ability to manually operate and / or monitor in the control room: CCW indications and controls.

K/A MATCH ANALYSIS
Annunciators are being tested as an indication of the reason the CCW pump tripped. The K/A is met by testing knowledge needed to adequately monitor indications that cause the CCW pump to trip.

ANSWER / DISTRACTOR ANALYSIS
A. Correct. LO-LO LEVEL will trip CCW pumps. See 17002-1 Window A05.
B. Incorrect. See 17002-1 Window B06. Plausible because applicant may assume a minimum flow requirement for pump protection.
C. Incorrect. See 17002-1 Window C05. Plausible because applicant may assume loss of suction would be a concern, hence auto pump trip.
D. Incorrect. See 17002-1 Window A06. Plausible because there is an auto action (pump start) associated with the alarm.

REFERENCES
1. Alarm Response Procedure, 17002-1, ALB 02 on Panel 1A1.
2. Vogtle Exam Question LO-LP-10101-06-03.

MCS Time: 1 Points: 1.00 Version: 0 1 2 3 4 5 6 7 8 9
Answer: A D A C B A B A A B Scramble Range: A - D

QUESTIONS REPORT

for Voglte 2005-301 Draft

Tier:	2	Group:	1
Key Word:	CCW PUMP ALARM START	Cog Level:	MEM 3.0
Source:	B	Exam:	VG05301
Test:	R	Author/Reviewer:	MAB/RSB

ANNUNCIATOR RESPONSE PROCEDURES FOR ALB 02 ON PANEL 1A1 ON MCB

PROCEDURE USAGE REQUIREMENTS-		SECTIONS
Continuous Use:	Procedure must be open and readily available at the work location. Follow procedure step by step unless otherwise directed.	**ALL**
Reference Use:	Procedure or applicable section(s) available at the work location for ready reference by person performing steps.	**NONE**
Information Use:	Available on plant site for reference as needed.	**NONE**

WINDOW A05

ORIGIN	SETPOINT	CCW TRAIN A SURGE TK LO-LO LVL
1-LSLL-1852 1-LSLL-1854 1-LSLL-1856	4.75 in. below CL (equal to 42%)	

1.0 PROBABLE CAUSE

1. Failure of automatic make-up from Demineralized Water System.

2. Failure of manual make-up from Reactor Makeup Water System.

3. Leak in Component Cooling Water System.

2.0 AUTOMATIC ACTIONS

LO-LO level will trip Component Cooling Water Pumps.

3.0 INITIAL OPERATOR ACTIONS

GO to 18020-1, "Loss Of Component Cooling Water".

4.0 SUBSEQUENT OPERATOR ACTIONS

NONE

5.0 COMPENSATORY OPERATOR ACTIONS

NONE

END OF SUB-PROCEDURE

REFERENCES: 1X4DB136, 1X3D-BD-L01A, 1X3D-BD-L01C, 1X3D-BD-L01E, 1X5DN091-1, -2, -3, 1X5DT0022, CX5DT101-96

WINDOW A06

ORIGIN	SETPOINT	CCW TRAIN A LO HDR PRESS
1-PSL-1852B 1-PSL-1854B 1-PSL-1856B	65 psig	

1.0 PROBABLE CAUSE

1. Running pumps have tripped.

2. Leak in Component Cooling Water System.

2.0 AUTOMATIC ACTIONS

Standby pump starts on low header pressure.

3.0 INITIAL OPERATOR ACTIONS

GO to 18020-1, "Loss Of Component Cooling Water".

4.0 SUBSEQUENT OPERATOR ACTIONS

NONE

5.0 COMPENSATORY OPERATOR ACTIONS

NONE

END OF SUB-PROCEDURE

REFERENCES: 1X4DB136, 1X3D-BD-L01A, 1X3D-BD-L01C, 1X3D-BD-L01E, 1X5DN091-1, -2, CX5DT101-128

WINDOW B06

ORIGIN	SETPOINT	CCW TRAIN A LO FLOW
1-FSL-1876	8500 gpm	

1.0 PROBABLE CAUSE

Pump trip.

2.0 AUTOMATIC ACTIONS

If a pump trip has occurred, the standby component Cooling Water Pump starts on low header pressure.

3.0 INITIAL OPERATOR ACTIONS

GO to 18020-1, "Loss Of Component Cooling Water".

4.0 SUBSEQUENT OPERATOR ACTIONS

NONE

5.0 COMPENSATORY OPERATOR ACTIONS

NONE

END OF SUB-PROCEDURE

REFERENCES: 1X4DB136, 1X5DV026, 1X3D-BD-L01A, 1X3D-BD-L01C, 1X3D-BD-L01E, CX5DT101-129

WINDOW C05

ORIGIN	SETPOINT	CCW TRAIN A SURGE TK MAKE UP LVL
1-LSL-1850	1.25 in. above CL (equal to 52%)	

1.0 PROBABLE CAUSE

Component Cooling Water (CCW) System leakage.

2.0 AUTOMATIC ACTIONS

Makeup Valve 1-LV-1850 opens.

3.0 INITIAL OPERATOR ACTIONS

NONE

4.0 SUBSEQUENT OPERATOR ACTIONS

1. MONITOR level using 1-LIT-1846 or computer point L2671.

2. If 1-LV-1850 fails to open:

   a. OPEN the valve using 1-HS-1850 on QMCB,
   b. CONTINUE to monitor level,
   c. OPEN 1-LV-1848 using 1-HS-1848 if level continues to fall.

3. If equipment failure is indicated, INITIATE maintenance as required.

5.0 COMPENSATORY OPERATOR ACTIONS

NONE

END OF SUB-PROCEDURE

REFERENCES: 1X4DB136, 1X3D-BD-L01G, 1X5DT0022, CX5DT101-95

008A4.01
Replaces 008A4.11

LO-LP-10101-06-03
Based on the following conditions:

* Unit 1 is at 30% power
* NSCW Pumps 1 & 3 are running
* CCW Pumps 3 & 5 are running
* ACCW Pump 1 is running

CCW Pump #3 Trips. The RO responds to the trip. Looking at the annunciators, how can he quickly tell what caused the pump to trip?

Correct → A. CCW TRAIN A SURGE TK LO-LO-LVL

B. CCW TRAIN A LO FLOW

C. CCW TRAIN A SURGE TK MAKE UP LVL

D. CCW TRAIN A LO HDR PRESS

LO-LP-10101-06
Describe the CCW pump trip signals.

10. 008AK3.05 001

The following conditions exist on Unit 2:

- A reactor trip and safety injection have occurred.
- No reactor coolant pumps are running.
- RCS pressure is 1335 psig and lowering.
- Pressurizer level is 100% and stable.
- RCS hot leg temperatures indicate 578 °F.
- Average of the five highest CETs on the IPC indicate 585 °F.
- Containment pressure is 4.5 psig.
- All steam generator narrow range levels indicate 8%.
- 200 gpm auxiliary feedwater flow is being supplied to each steam generator.

Which ONE of the following describes the correct course of action with respect to Safety Injection and the reason for that course of action?

A. ✓ Do not terminate safety injection because of inadequate subcooling and inadequate RCS inventory.

B. Do not terminate safety injection because of inadequate RCS inventory and inadequate secondary heat removal capability.

C. Do not terminate safety injection because of inadequate subcooling and inadequate secondary heat removal capability.

D. Safety injection may be terminated because all termination criteria are met.

K/A
008 Pressurizer Vapor Space Accident
AK3.05 Knowledge of the reasons for the following responses as they apply to the Pressurizer Vapor Space Accident: ECCS termination or throttling criteria.

K/A MATCH ANALYSIS
The question tests the reason for not terminating SI, which is the same as the reason for having the termination criteria in the first place. Conditions of a steam space LOCA are given to complete the K/A match.

ANSWER / DISTRACTOR ANALYSIS
A. Correct. Subcooling is zero (Core is saturated) and RCS P supports inventory being inadequate.
B. Incorrect. Secondary heat removal is adequate. Plausible because SG levels are low, but AFW flows are adequate.
C. Incorrect. Secondary heat removal is adequate. Plausible because SG levels are low, but AFW flows are adequate.
D. Incorrect. Subcooling and RCS pressure are not met.

REFERENCES
1. ASME Steam Tables: http://www.connel.com/freeware/steam.shtml.
2. LO-LP-37022-16, SI Termination, Rev. 16, 08/29/2000.
3. Vogtle Exam Bank Question LO-LP-37022-04-02.
4. 19010-C, E-1 Loss of Reactor or Secondary Coolant, Rev. 28.2, 09/27/2002.
5. 19200-C, F-0 Critical Safety Function Status Trees, Rev. 19, 02/25/2004.

MCS	Time:	1	Points:	1.00	Version:	0 1 2 3 4 5 6 7 8 9	
					Answer:	A B A A B C D D C D	Scramble Range: A - D

Tier:	1	Group:	1
Key Word:	SI ECCS TERMINATION	Cog Level:	C/A 4.0
Source:	M	Exam:	VG05301
Test:	R	Author/Reviewer:	MAB/RSB

10. 008AK3.05 001

The following conditions exist on Unit 2:

- A reactor trip and safety injection have occurred.
- No reactor coolant pumps are running.
- RCS pressure is 1335 psig and lowering.
- Pressurizer level is 100% and stable.
- RCS hot leg temperatures indicate 578 °F.
- Average of the five highest CETs on the IPC indicate 585 °F.
- Containment pressure is 4.5 psig.
- All steam generator narrow range levels indicate 8%.
- 200 gpm auxiliary feedwater flow is being supplied to each steam generator.

Which ONE of the following describes the correct course of action with respect to Safety Injection and the reason for that course of action?

A. ✓ Do not terminate safety injection because of inadequate subcooling and inadequate RCS inventory.

B. Do not terminate safety injection because of inadequate RCS inventory and inadequate secondary heat removal capability.

C. Do not terminate safety injection because of inadequate subcooling and inadequate secondary heat removal capability.

D. Safety injection may be terminated because all termination criteria are met.

K/A
008 Pressurizer Vapor Space Accident
AK3.05 Knowledge of the reasons for the following responses as they apply to the Pressurizer Vapor Space Accident: ECCS termination or throttling criteria.

K/A MATCH ANALYSIS
The question tests the reason for not terminating SI, which is the same as the reason for having the termination criteria in the first place. Conditions of a steam space LOCA are given to complete the K/A match.

ANSWER / DISTRACTOR ANALYSIS
A. Correct. Subcooling is zero (Core is saturated) and RCS P supports inventory being inadequate.
B. Incorrect. Secondary heat removal is adequate. Plausible because SG levels are low, but AFW flows are adequate.
C. Incorrect. Secondary heat removal is adequate. Plausible because SG levels are low, but AFW flows are adequate.
D. Incorrect. Subcooling and RCS pressure are not met.

REFERENCES
1. ASME Steam Tables: http://www.connel.com/freeware/steam.shtml.
2. LO-LP-37022-16, SI Termination, Rev. 16, 08/29/2000.
3. Vogtle Exam Bank Question LO-LP-37022-04-02.
4. 19010-C, E-1 Loss of Reactor or Secondary Coolant, Rev. 28.2, 09/27/2002.
5. 19200-C, F-0 Critical Safety Function Status Trees, Rev. 19, 02/25/2004.

MCS	Time:	1	Points:	1.00	Version:	0 1 2 3 4 5 6 7 8 9	
					Answer:	A B A A B C D D C D	Scramble Range: A - D

Tier:	1	Group:	1
Key Word:	SI ECCS TERMINATION	Cog Level:	C/A 4.0
Source:	M	Exam:	VG05301
Test:	R	Author/Reviewer:	MAB/RSB

1. 008AK3.05 001

The following conditions exist on Unit 2:

- A reactor trip and safety injection have occurred.
- No reactor coolant pumps are running.
- RCS pressure is 1335 psig and lowering.
- Pressurizer level is 100% and stable.
- RCS hot leg temperatures indicate 578 °F.
- Average of the five highest CETs on the IPC indicate 585 °F.
- Containment pressure is 4.5 psig.
- All steam generator narrow range levels indicate 8%.
- 200 gpm auxiliary feedwater flow is being supplied to each steam generator.

Which ONE of the following describes the correct course of action with respect to Safety Injection and the reason for that course of action?

A. Do not terminate safety injection because of inadequate subcooling and inadequate RCS inventory.

B. Do not terminate safety injection because of inadequate RCS inventory and inadequate secondary heat removal capability.

C. Do not terminate safety injection because of inadequate subcooling and inadequate secondary heat removal capability.

D. Safety injection may be terminated because all termination criteria are met.

K/A
008 Pressurizer Vapor Space Accident
AK3.05 Knowledge of the reasons for the following responses as they apply to the Pressurizer Vapor Space Accident: ECCS termination or throttling criteria.

K/A MATCH ANALYSIS
The question tests the reason for not terminating SI, which is the same as the reason for having the termination criteria in the first place. Conditions of a steam space LOCA are given to complete the K/A match.

ANSWER / DISTRACTOR ANALYSIS
A. Correct. Subcooling is zero (Core is saturated) and RCS P supports inventory being inadequate.
B. Incorrect. Secondary heat removal is adequate. Plausible because SG levels are low, but AFW flows are adequate.
C. Incorrect. Secondary heat removal is adequate. Plausible because SG levels are low, but AFW flows are adequate.
D. Incorrect. Subcooling and RCS pressure are not met.

REFERENCES
1. ASME Steam Tables: http://www.connel.com/freeware/steam.shtml.
2. LO-LP-37022-16, SI Termination, Rev. 16, 08/29/2000.
3. Vogtle Exam Bank Question LO-LP-37022-04-02.
4. 19010-C, E-1 Loss of Reactor or Secondary Coolant, Rev. 28.2, 09/27/2002.
5. 19200-C, F-0 Critical Safety Function Status Trees, Rev. 19, 02/25/2004.

MCS	Time: 1	Points: 1.00	Version:	0 1 2 3 4 5 6 7 8 9			
			Answer:	A B A A B C D D C D		Scramble Range: A - D	
Tier:	1			Group:	1		
Key Word:	SI ECCS TERMINATION			Cog Level:	C/A 4.0		
Source:	M			Exam:	VG05301		
Test:	R			Author/Reviewer:	MAB/RSB		

III. LESSON OUTLINE	NOTES
I. INTRODUCTION	
A. This lesson will give the student a general knowledge of ES 1.1 SI termination	LO-TP-37002-001
B. Present Lesson Objectives	
II. PRESENTATION	
A. Description	
1. Basis of ES 1.1	Objective 3
a. To provide the necessary instruction to terminate SI and stabilize plant conditions	
2. Entry into SI termination from:	
a. 19000 - reactor trip or safety injection	
b. 19010 - loss of reactor or secondary coolant	
c. 19231 - response to loss of secondary heat sink	
3. Entry occurs when following criteria is met	ECCS Termination Criteria
a. The RCS is subcooled	
b. An adequate secondary heat sink exists	
c. RCS pressure is either stable or increasing, and	
d. Pressurizer level is indicating on span	
B. Special Considerations	
1. "Reset" vs "Terminate" SI	Objective 2
a. Reset - to take action to block automatic SI actuation or to remove pre-existing SI signal for the purpose of realigning safeguards equipment	
b. Terminate - action taken to actually fully stop or reduce ECCS injection flow into the core	
SI may be reset at anytime after the SI timer times out, but termination of SI flow should be delayed until SI termination criteria has been procedurally verified	
2. SI termination criteria (continuous action step)	Objective 1
a. Subcooling greater than or equal to 24°F indicates	LO-TP-37022-003

1) Adequate core cooling

2) Ensures maintaining minimum subcooling

b. Secondary heat sink

1) Ensure secondary heat removal capability

2) Ensures adequate secondary heat sink

c. Stables or rising RCS pressure

1) Ensures subcooling will be stable or increasing

2) Ensures SI flow is effective in increasing RCS inventory

3) Stable is defined as pressure not changing significantly, or if pressure is lowering, it is lowering as a result of operator action (Example: Cooldown induced due to feeding SGs)

d. Pressure level greater than or equal to 9%

1) Ensures adequate RCS inventory

2) Cannot be relied on alone since level can rise with pressure decreasing as in the case of a pressurizer steam space break

3. Reinitiation criteria — Objective 5

a. Reinitiate SI if:

1) Subcooling is lost (less than or equal to 24oF) or

2) Pressurizer level is lost (less than 9%)

b. It is mandatory to manually re-establish SI. Operators should manually start ECCS pumps as necessary using Attachment D if these 2 parameters cannot be met.

c. This is a continuous action step — Objective 8

C. Major Action Steps (use 19011-C and discuss each step) — Objective 4 LO-TP-37022-002

1. Sequentially reduce SI flow

Note: Ensure students know how to perform each step of procedure

a. Reset SI and CIA

b. Verify that only one charging pump is running

1) After stopping a charging pump, RCS pressure should be checked

ACTION/EXPECTED RESPONSE	RESPONSE NOT OBTAINED
* 8. Check if ECCS flow should be reduced:	
a. RCS subcooling - GREATER THAN 24°F [38°F ADVERSE].	a. Go to Step 9. OBSERVE NOTE PRIOR TO STEP 9.
b. Secondary heat sink: • Total feed flow to intact SG(s) - GREATER THAN 570 GPM. -OR- • NR level in at least one intact SG - GREATER THAN 10% [32% ADVERSE].	b. IF neither condition satisfied, THEN go to Step 9. OBSERVE NOTE PRIOR TO STEP 9.
c. RCS pressure - STABLE OR RISING.	c. Go to Step 9. OBSERVE NOTE PRIOR TO STEP 9.
d. PRZR level - GREATER THAN 9% [37% ADVERSE].	d. Try to stabilize RCS pressure: • Use normal spray if instrument air to containment not isolated. • Do NOT use the PORVs to stabilize RCS pressure. Go to Step 9. OBSERVE NOTE PRIOR TO STEP 9.
e. Go to 19011-C, ES-1.1 SI TERMINATION.	

Sheet 1 of 1

F-0.2
CORE COOLING

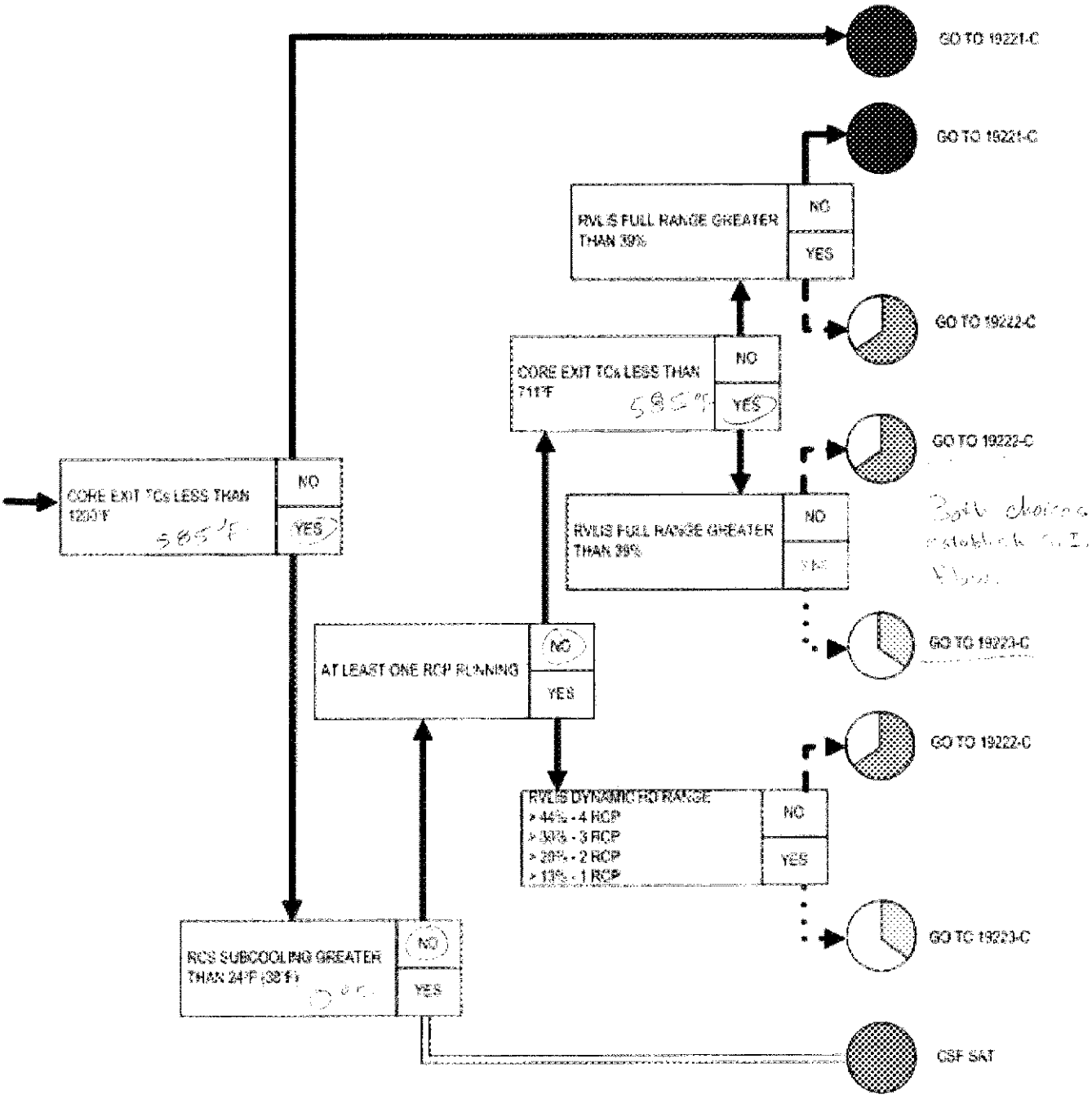

Sheet 1 of 1

F-0.6
INVENTORY

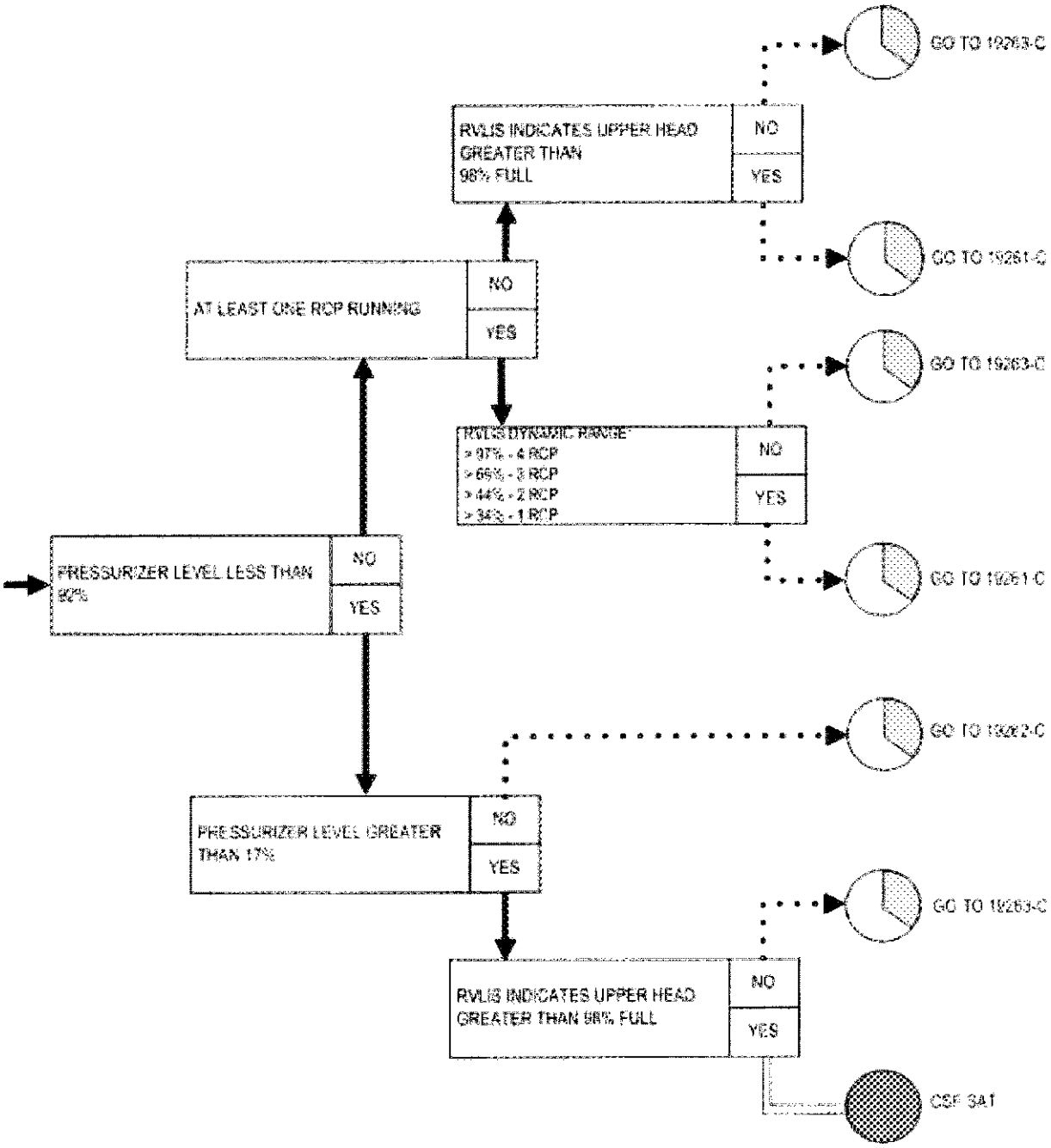

LO-LP-37022-04-02

Based on the following plant indications:

* A loss of coolant accident is in progress
* A Rx trip and Safety Injection have occurred
* RCS pressure is at 1335 psig and stable
* PZR level is at 38% and stable
* RCS WR hot leg temperatures indicate 545 F
* Average of the 5 highest core exit TCs on IPC indicate 542 F
* Containment pressure is 4.5 psig
* All SG NR levels presently indicate < 10%, but 200 gpm AFW flow is being supplied to each SG.

Determine whether or not ECCS flow can be reduced.

A. **Yes, ECCS flow can be reduced because ALL termination criteria have been satisfied.**
B. No, ECCS flow can NOT be reduced because Pressurizer level and RCS subcooling values do not meet termination criteria.
C. No, ECCS flow can NOT be reduced because termination criteria are not met on subcooling, Pressurizer level, and secondary heat sink.
D. No, ECCS flow can NOT be reduced. Subcooling is the only termination criteria not met.

LO-LP-37022-04

Using EOP 19011, briefly describe how each step is accomplished.

The Fluid Flow Calculator

The Engineering Units Conversion Calculator

The Engineering Economics Calculator

The Psychrometric Calculator

The Saturated Steam Tables

The Air Duct Calculator

The Free Engineering Software Website
CGI PERL Scripts
by Michael J Rocchetti PE

Home Scripts Download Advertise Contact Links

These are your results

This is what you input
The absolute pressure is: 1350.0000 PSI

These are the results
The temperature is: 582.36 degrees F
Specific volume of saturated liquid is: 0.022878 ft^3/lbm
specific volume evap is: 0.292150 ft^3/lbm
specific volume of saturated vapor is: 0.315028 ft^3/lbm
enthalpy of saturated liquid is: 592.3 BTU/lbm
enthalpy evap is: 585.6 BTU/lbm
enthalpy of saturated vapor is: 1177.9 BTU/lbm
entropy of saturated liquid is: 0.7906 BTU/lbm F
entropy evap is: 0.5618 BTU/lbm F
entropy of saturated vapor is: 1.3525 BTU/lbm F

Back to the Steam Tables

11. 009EA1.15 001

Unit 1 is operating at 100% rated thermal power with pressurizer level at 60% and both pressurizer spray valves in manual and shut while I&C investigates erratic responses.

A main turbine control failure results in a rapid load reduction. The RO stabilizes RCS pressure at 2300 psig by manually cracking open one spray valve. Pressure is held constant at 2300 psig for several minutes. The RO then observes that pressurizer level is 68%, PORV 455 is open, PORV 456 is shut, and the backup heaters are on.

Which ONE of the following correctly describes the status of the pressurizer pressure control system and required operator actions?

A. The pressurizer pressure control system is functioning properly. Continue to lower pressure with pressurizer sprays.

B. ✓ The pressurizer pressure control system is malfunctioning. Shut PORV Block Valve HV8000A.

C. The pressurizer pressure control system is malfunctioning. Open PORV 456.

D. The pressurizer pressure control system is malfunctioning. De-energize the backup heaters.

Have utility verify that there is no controller windup. If this were the case, could "A" also be correct?

K/A
009 Small Break LOCA
EA1.15 Ability to operate and monitor the following as they apply to a small break LOCA: PORV and PORV Block Valve.

K/A MATCH ANALYSIS
A breach in the RCS has occurred due to the PORV malfunctioning and being in the open position when it should be in the close position. The question tests the applicant's knowledge of the expected position of the valve given the plant conditions that are provided in the stem. The question also tests the required operator action based on the monitoring of the PORVs. The question tests the knowledge that the applicant must have in order to have the skills of monitoring and operating the PORV and PORV Block Valves.

ANSWER / DISTRACTOR ANALYSIS
A. Incorrect. Pzr pressure is below both PORV setpts and both PORVs should be closed, therefore the system is malfunctioning. Plausible because applicant may not know PORV setpoints.
B. Correct. PORV 455 setpt is 2345 psig, therefore it should be closed.
C. Incorrect. PORV 456 setpt is 2335 psig, therefore it should be closed. Plausible because applicant may not know the PORV setpts and opening the other PORV would be a correct response if the applicant were to think that the PORV setpt was violated.
D. Incorrect. De-energizing backup heaters is an incorrect action. The B/U Htrs are energized because of high level in the pressurizer (insurge). Plausible because pressure is higher than nominal and de-energizing backup heaters would appear to help to reduce pressure.

REFERENCES
1. Vogtle Exam Bank Question LO-LP-16303-03-19.
2. Lesson Plan V-LO-TX-16001, Reactor Coolant System, Rev. 3.

MCS Time: 1 Points: 1.00 Version: 0 1 2 3 4 5 6 7 8 9
Answer: B D C C C B C C D C Scramble Range: A - D

Tier:	1	Group:	1
Key Word:	PORV BLOCK VALVE	Cog Level:	C/A 3.9
Source:	B	Exam:	VG05301
Test:	R	Author/Reviewer:	MAB/RSB

11. 009EA1.15 001

Unit 1 is operating at 100% rated thermal power with pressurizer level at 60% and both pressurizer spray valves in manual and shut while I&C investigates erratic responses.

A main turbine control failure results in a rapid load reduction. The RO stabilizes RCS pressure at 2300 psig by manually cracking open one spray valve. Pressure is held constant at 2300 psig for several minutes. The RO then observes that pressurizer level is 68%, PORV 455 is open, PORV 456 is shut, and the backup heaters are on.

Which ONE of the following correctly describes the status of the pressurizer pressure control system and required operator actions?

A. The pressurizer pressure control system is functioning properly. Continue to lower pressure with pressurizer sprays.

B. ✓ The pressurizer pressure control system is malfunctioning. Shut PORV Block Valve HV8000A.

C. The pressurizer pressure control system is malfunctioning. Open PORV 456.

D. The pressurizer pressure control system is malfunctioning. De-energize the backup heaters.

Have utility verify that there is no controller windup. If this were the case, could "A" also be correct?

K/A
009 Small Break LOCA
EA1.15 Ability to operate and monitor the following as they apply to a small break LOCA: PORV and PORV Block Valve.

K/A MATCH ANALYSIS
A breach in the RCS has occurred due to the PORV malfunctioning and being in the open position when it should be in the close position. The question tests the applicant's knowledge of the expected position of the valve given the plant conditions that are provided in the stem. The question also tests the required operator action based on the monitoring of the PORVs. The question tests the knowledge that the applicant must have in order to have the skills of monitoring and operating the PORV and PORV Block Valves.

ANSWER / DISTRACTOR ANALYSIS
A. Incorrect. Pzr pressure is below both PORV setpts and both PORVs should be closed, therefore the system is malfunctioning. Plausible because applicant may not know PORV setpoints.
B. Correct. PORV 455 setpt is 2345 psig, therefore it should be closed.
C. Incorrect. PORV 456 setpt is 2335 psig, therefore it should be closed. Plausible because applicant may not know the PORV setpts and opening the other PORV would be a correct response if the applicant were to think that the PORV setpt was violated.
D. Incorrect. De-energizing backup heaters is an incorrect action. The B/U Htrs are energized because of high level in the pressurizer (insurge). Plausible because pressure is higher than nominal and de-energizing backup heaters would appear to help to reduce pressure.

REFERENCES
1. Vogtle Exam Bank Question LO-LP-16303-03-19.
2. Lesson Plan V-LO-TX-16001, Reactor Coolant System, Rev. 3.

MCS Time: 1 Points: 1.00 Version: 0 1 2 3 4 5 6 7 8 9
Answer: B D C C C B C C D C Scramble Range: A - D

Tier:	1	Group:	1
Key Word:	PORV BLOCK VALVE	Cog Level:	C/A 3.9
Source:	B	Exam:	VG05301
Test:	R	Author/Reviewer:	MAB/RSB

2. 009EA1.15 001

Unit 1 is operating at 100% rated thermal power with pressurizer level at 60% and both pressurizer spray valves in manual and shut while I&C investigates erratic responses.

A main turbine control failure results in a rapid load reduction. The RO stabilizes RCS pressure at 2300 psig by manually cracking open one spray valve. Pressure is held constant at 2300 psig for several minutes. The RO then observes that pressurizer level is 68%, PORV 455 is open, PORV 456 is shut, and the backup heaters are on.

Which ONE of the following correctly describes the status of the pressurizer pressure control system and required operator actions?

A. The pressurizer pressure control system is functioning properly. Continue to lower pressure with pressurizer sprays.

B. ✓ The pressurizer pressure control system is malfunctioning. Shut PORV Block Valve HV8000A.

C. The pressurizer pressure control system is malfunctioning. Open PORV 456.

D. The pressurizer pressure control system is malfunctioning. De-energize the backup heaters.

Have utility verify that there is no controller windup. If this were the case, could "A" also be correct?

K/A
009 Small Break LOCA
EA1.15 Ability to operate and monitor the following as they apply to a small break LOCA: PORV and PORV Block Valve.

K/A MATCH ANALYSIS
A breach in the RCS has occurred due to the PORV malfunctioning and being in the open position when it should be in the close position. The question tests the applicant's knowledge of the expected position of the valve given the plant conditions that are provided in the stem. The question also tests the required operator action based on the monitoring of the PORVs. The question tests the knowledge that the applicant must have in order to have the skills of monitoring and operating the PORV and PORV Block Valves.

ANSWER / DISTRACTOR ANALYSIS
A. Incorrect. Pzr pressure is below both PORV setpts and both PORVs should be closed, therefore the system is malfunctioning. Plausible because applicant may not know PORV setpoints.
B. Correct. PORV 455 setpt is 2345 psig, therefore it should be closed.
C. Incorrect. PORV 456 setpt is 2335 psig, therefore it should be closed. Plausible because applicant may not know the PORV setpts and opening the other PORV would be a correct response if the applicant were to think that the PORV setpt was violated.
D. Incorrect. De-energizing backup heaters is an incorrect action. The B/U Htrs are energized because of high level in the pressurizer (insurge). Plausible because pressure is higher than nominal and de-energizing backup heaters would appear to help to reduce pressure.

REFERENCES
1. Vogtle Exam Bank Question LO-LP-16303-03-19.
2. Lesson Plan V-LO-TX-16001, Reactor Coolant System, Rev. 3.

MCS Time: 1 Points: 1.00 Version: 0 1 2 3 4 5 6 7 8 9
Answer: B D C C C B C C D C Scramble Range: A - D

Tier:	1	Group:	1
Key Word:	PORV BLOCK VALVE	Cog Level:	C/A 3.9
Source:	B	Exam:	VG05301
Test:	R	Author/Reviewer:	MAB/RSB

16-32 POWER OPERATED RELIEF AND ISOLATION VALVES

A 6-inch relief line is attached to the upper head of the pressurizer. The line divides into two parallel 3-inch lines, each containing a power operated relief (PORV) and motor operated isolation valve. The two PORVs are solenoid operated steam ported valves controlled from the QMCB and remote shutdown panels. PORV PV-455 relief set point is 2345 psig and PORV PV-456 relief set point is set at 2335 psig. Each valve has a capacity of 210,000 lbs/hr. Actuation pressure is set to prevent operation of the pressurizer safety valves. A normally open motor operated isolation valve called "block valves" are located upstream of each relief valve. It is closed when necessary to isolate a PORV because of leakage. Isolation of the relief valves is allowed because the pressurizer safety valves provide the RCS with sufficient protection in the event of an accident. The PORV's were not taken credit for in the accident analysis.

Downstream of the power-operated relief valves, the two 3-inch lines combine into a common discharge line from the safety valves and dumps to the pressurizer relief tank.

In addition to the function of providing overpressure protection for the pressurizer and RCS when operating, the PORVs also protect the RCS when the plant is shut down and water solid. This is accomplished by varying the relief opening set point of the PORVs to open. Based on certain conditions, the set point will change. This is accomplished by the Cold Overpressure Protection System.

SECTION H

PRESSURIZER LEVEL CONTROL

16-56 CONTROL FUNCTIONS AND INTERLOCKS

The function of the Pressurizer Level Control System is to maintain a constant mass in the RCS for all operating conditions (Tavg 557°F to 586.4°F). Since the volume of coolant increases as Tavg increases, the programmed level set point rises from 25% at no load Tavg of 557°F, to 60% for Tavg of 588.4°F. Since program level is based on Auctioneer high Tavg, at 100% power, program level is set to 57.8%, due to full load Tavg being 586.4°F. The Pressurizer Level Protection System protects the pressurizer from becoming water solid or from completely draining during plant operation.

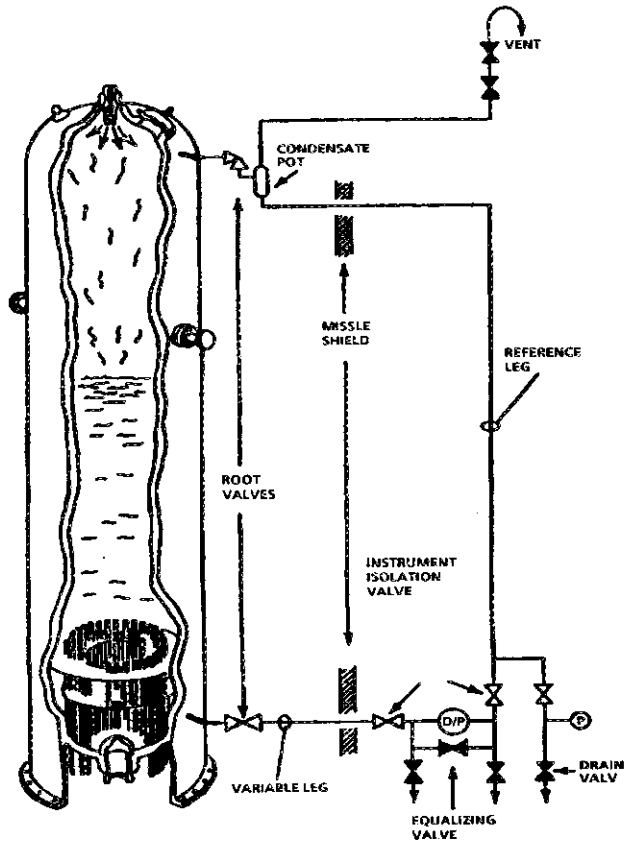

16-57 Pressurizer Level Instrumentation

The Pressurizer System uses four differential pressure (ΔP) transmitters to sense water level in the pressurizer. The transmitters send a level signal to control room indicators, alarms, and protection and control circuits. All four pressurizer level detectors use the same principle of operation.

Each level instrument is made up of a closed reference leg, a differential pressure (ΔP) transmitter, and a condensing pot. The ΔP transmitter compares water level pressure of the reference leg to the water level pressure in the pressurizer. The condensing pot is located on top of the reference leg and acts as a collection point for condensation. The condensing pot, which is located on the top of the reference leg, ensures that under normal steady state conditions the reference leg remains full of water in order to correctly indicate pressurizer level. The steam from the pressurizer enters the reference leg condensing pot. The condensing pot is not insulated which causes the steam to condense when cooled by containment ambient temperature. The condensate pot also seals the reference leg from the hydrogen gas in the pressurizer vapor space which might give erroneous level indications if allowed to mix with the water in the reference leg. To minimize the penetrations made in the pressurizer, the reference legs are shared by other instruments. Unwanted actuations could occur if proper

c. Step load reduction of 50% with both auto rod control and steam dump control.

Level control selector switch LS-459D

To further explain its operation the following example is given:

Level transmitter 459/460 is selected on LS-459D

LT-459 is selected as the primary channel for the master level control. If the level sensed by LT-459 drops to ≤ 17% it will cause the following to occur:

a. CVCS Charging Flow increases by opening FCV-121

b. All pressurizer heaters will automatically trip.

c. CVCS Letdown Isolation valve LV-459 will automatically close.

d. All three CVCS Letdown Orifice Isolation valves will automatically close.

LT-460 is selected for the secondary channel. If level sensed by LT-460 drops to ≤ 17% it will cause the following to occur:

a. All Pressurizer heaters will automatically trip.

b. CVCS Letdown Isolation valve LV-460 will automatically close.

c. All three CVCS Letdown Orifice Isolation valves will automatically close.

If the primary level control channel sense pressurizer level ≥ 5% above program pressurizer level, a signal is generated that energizes the pressurizer backup heaters. Alarm ALB11-C01 "Przr Hi Level Dev and heaters on" annunciates. The purpose for this design is to heat the in surge of water to saturation in anticipation of a possible sudden out surge to maintain pressurizer pressure. Typical pressurizer temperatures are as follows:

- Pressurizer Surge Line Temperature ~ 645°F
- Pressurizer Liquid Temperature ~ 650°F
- Pressurizer Steam Space Temperature ~ 650-655°F

This example applies to all possible selections on LS-459D.

16-59 Pressurizer Level Protection System

The Pressurizer Level Protection System also utilizes the same level transmitters as the Control System. The level indications provide the information to the Reactor Protection System (RPS). The Reactor Protection System will automatically trip the reactor if the pressurizer level reaches a high level set point of 92% when the reactor is above 10% power. This function however looks at all three level channels and is not based on the switch position of LS-459D. Reactor trip will occur if two out of the three level transmitters are indicating ≥92%. This Reactor trip function protects the RCS

A decrease in RCS average temperature will result in an out surge from the pressurizer. As the water volume decreases the steam bubble expands to maintain pressure. The control heater current will increase as pressure decreases to add energy to the water and halt the pressure decrease. If pressure continues to decrease, the larger capacity backup heater banks will energize to add additional energy to the pressurizer water. This increase in energy to a saturated water volume will convert some of the water at the water-steam interface to steam. Remember, the specific volume of saturated steam is greater than that of the same temperature water. Since the steam volume expands faster than the water volume decreases, the net effect is to stop the pressure decrease. The heaters will continue to add energy to the water to return pressurizer pressure to normal conditions. As pressure rises, the backup heaters will turn off. As pressure continues to increase, control heater current will decrease to stabilize pressure at 2235 psig.

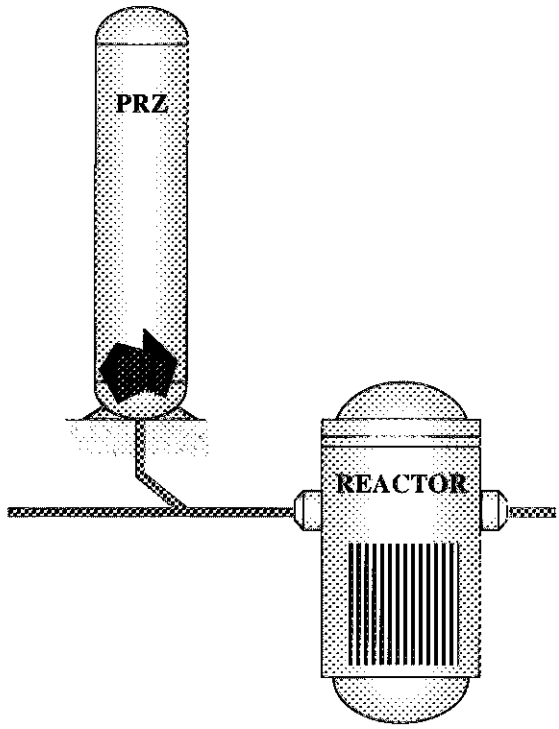

In surges into the pressurizer are more complex. An increase in RCS average temperature will cause an insurge into the pressurizer. This insurge will increase the pressure by compressing the steam bubble. This compression will cause some of the steam to condense. Since water has smaller specific volume than steam the pressure increase should be arrested. In addition, as pressure rises above 2235 psig, control group heater current decreases to reduce heat input into the pressurizer water. If the pressure increase continues, spray valves will open to spray cold leg water into the steam volume. This water, almost 100°F cooler than the pressurizer steam space temperature, will quench more of the steam bubble causing its volume to decrease rapidly. Since the steam volume decreases faster than the water volume increases from the insurge, pressurizer pressure will decrease. As pressure decreases, the spray valve will close and control group heater current will increase to stabilize pressure at 2235 psig. On large insurges, the relatively cooler water from the hot leg will decrease the pressurizer water temperature. This will tend to cool the water volume causing it to contract retarding the pressure increase. As the sprays respond to the increase in pressure caused by the insurge, the decrease in steam temperature coupled with the decrease in water temperature can result in pressure decreasing faster than the control and backup heaters can respond to arrest the decrease (there is a significant delay in the heat input from the heaters after they energize). To prevent large pressure decreases from an insurge, the backup heaters will energize if pressurizer level rises significantly. This action, in anticipation of the cool down expected from

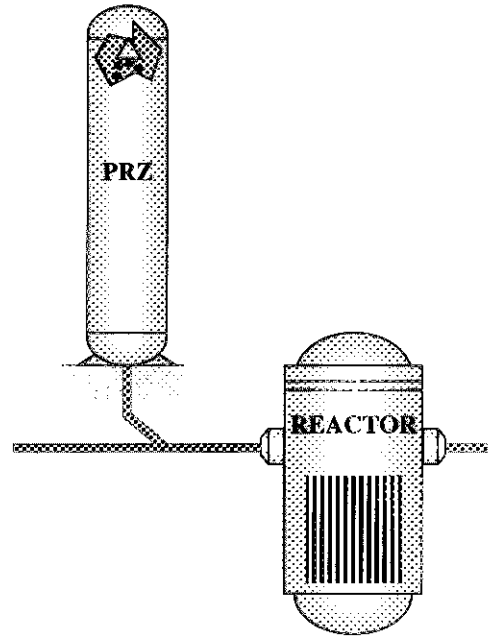

the insurge, reduces the time to feel the impact of the heaters in effect limiting the size of the pressure reduction.

If the pressure transients exceed the capability of the pressurizer sprays, two power-operated relief valve (PORVs) will open. The PORVs are solenoid piloted steam operated valves that relieve to the PRT.

The pressurizer pressure control uses a master controller that compares actual pressurizer pressure from one of the selected pressure channels to the reference pressure of 2235 psig. If there is a difference, the controller will energize the heaters or open the pressurizer spray. The master controller is a proportional plus integral controller. Because of this, its output is dependent on the magnitude of the difference and the integrated time that the difference is present.

Normally, the master controller has an output of approximately 25%, controlling pressure at 2235 psig. At 25% controller output, the proportional heaters are approximately 50% (200 kW) energized. This is necessary to account for the depressurizing effects from pressurizer bypass spray and ambient heat losses. As pressurizer pressure increases to 2250 psig, control heater power gradually decreases turning the proportional heaters off. As the error increases to 2260 psig, a controller output of 40.6%, pressurizer spray valves begin to open. If pressurizer pressure continues to increase, the spray valves will be fully open at 2310 psig with a controller output of 71.9%. Pressurizer pressure can be lowered manually by depressing the up arrow on PIC-455A (Pressurizer Master Pressure Controller) which will increase the controller output. This produces the same responses as the automatic control.

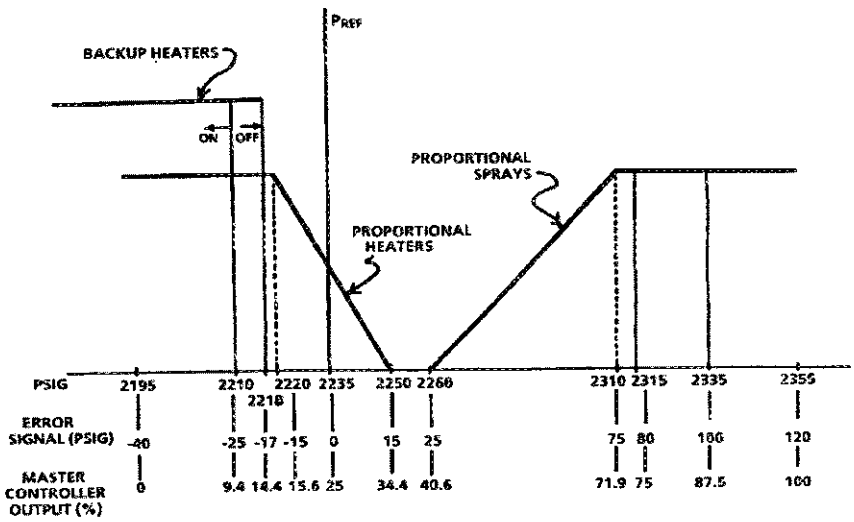

The controller output will decrease as pressurizer pressure decreases. As pressure decreases below 2235 psig, the controller output decreases below 25%. More power is supplied to the proportional heaters until they are fully energized at 2220 psig (controller output at 15.6%). If pressure continues to decrease, the backup heaters will energize at 2210 psig (9.4% output). When pressure returns to 2218 psig (14.4%percent output), the backup heaters de-energize. Pressurizer pressure can be raised manually by depressing the down arrow on 1-PIC-455A (Pressurizer Pressure Controller) to lower the controller output.

It is important to remember that the pressure set points discussed above may not be the exact set points that the respective pressurizer pressure control component will actuate. The integral portion of the master controller will modify the output signal for as the pressure error signal integrates (builds up). As the difference between the set point and actual pressure persists, the output of the controller continues to increase. In anticipation of the possible pressure transient that may occur, the pressurizer pressure controller actuates heaters and sprays before the pressure set points are reached.

LO-LP-16303-03-19
The unit is operating at 100% power with PZR level at 60% and both PZR spray valves in manual and shut while I&C is investigating erratic responses.

A main turbine control failure results in a rapid load reduction, causing RCS temperature, PZR level, and PZR pressure to go up rapidly. The RO stabilizes RCS pressure at 2300 psig by manually cracking open one spray valve. Pressure is held constant at 2300 psig for several minutes. The RO then observes that PZR level is 68%, PORV 455 is open, PORV 456 is shut, and the backup heaters are on.

The Pressurizer Pressure Control system is:

A. Functioning properly.

B. Malfunctioning, because PORV 455 should be shut.

C. Malfunctioning, because PORV 456 should be open.

D. Malfunctioning, because the backup heaters should be de-energized.

LO-LP-16303-03
Describe the response of the pressurizer pressure control system to variations in pressurizer pressure.

12. 010K1.06 001

The following Unit 1 conditions exist:

- Reactor is at 85% Rated Thermal Power
- PRZR PRESS CNTL SELECT Switch is selected to CH 455 / 456
- Pressurizer Auxiliary Pressurizer Spray Valve (HV-8145) has started leaking
- ALB12, Window D03, PRZR PRESS LO PORV BLOCK, annunciates

Which ONE of the following correctly describes the affect on charging flow and the pressurizer pressure control system?

A. Charging flow rate initially increases. The demand on the Pressurizer Pressure Master Controller increases.

B. Charging flow rate initially decreases. The demand on the Pressurizer Pressure Master Controller increases.

C. Charging flow rate initially increases. The demand on the Pressurizer Pressure Master Controller decreases.

D. Charging flow rate initially decreases. The demand on the Pressurizer Pressure Master Controller decreases.

K/A
010 Pressurizer Pressure Control
K1.06 Knowledge of the physical connections and / or cause-effect relationships between the PRZ PCS and the following systems: CVCS.

K/A MATCH ANALYSIS
The aux spray is part of the pzr pcs. This question tests the applicants knowledge of how a malfunction in the pzr pcs will impact the CVCS, namely charging flow rate. Therefore, the cause-effect relationship knowedge is required to correctly answer the question.

ANSWER / DISTRACTOR ANALYSIS
A. Incorrect. Demand on the controller will decrease. Plausible because applicant may not have an indepth understanding of how the master controller will respond.
B. Incorrect. Charging flow will increase. Plausible because applicant may not have an indepth understanding of how the master controller will respond and applicant may have a misconception of how charging flow will initially react to the leaking aux spray valve.
C. Correct. There will be an initial pressure drop causing charging flow to intially go up. As pressure drops, the pcs will want more heaters to turn on, thus the demand on the master controller must lower.
D. Incorrect. Charging flow will increase. Plausible because applicant may have a misconception of how charging flow will initially react to the leaking aux spray valve.

REFERENCES
1. Surry 2004-301, 004A2.17: Original question that was modified for this exam.
2. Lesson Plan V-LO-TX-16001, Primary Systems Lesson Plan, Chapter 16, Rev. 3, Page 99.
3. 1C1, Window D03, PRZR PRESS LO PORV BLOCK, 08/01/2003, Page 23 of 40.

MCS	Time:	1	Points:	1.00	Version:	0 1 2 3 4 5 6 7 8 9	
					Answer:	C B C A C A C B D A	Scramble Range: A - D

Tier:	2	Group:	1
Key Word:	PRESSURIZER PRESSURE	Cog Level:	C/A 2.9
Source:	M	Exam:	VG05301
Test:	R	Author/Reviewer:	MAB/RSB

12. 010K1.06 001

The following Unit 1 conditions exist:

(HV-8145)

- Reactor is at 85% Rated Thermal Power
- PRZR PRESS CNTL SELECT Switch is selected to CH 455 / 456
- A Pressurizer Auxiliary Pressurizer Spray valve has started leaking
- ALB12, Window D03, PRZR PRESS LO PORV BLOCK annunciates

Which ONE of the following correctly describes the affect on charging flow and the pressurizer pressure control system?

A. Charging flow rate initially increases. Ensure the demand on the Pressurizer Pressure Master Controller increases.

B. Charging flow rate initially decreases. Ensure the demand on the Pressurizer Pressure Master Controller increases.

C. Charging flow rate initially increases. Ensure the demand on the Pressurizer Pressure Master Controller decreases.

D. Charging flow rate initially decreases. Ensure the demand on the Pressurizer Pressure Master Controller decreases.

K/A
010 Pressurizer Pressure Control
K1.06 Knowledge of the physical connections and / or cause-effect relationships between the PRZ PCS and the following systems: CVCS.

K/A MATCH ANALYSIS
The aux spray is part of the pzr pcs. This question tests the applicants knowledge of how a malfunction in the pzr pcs will impact the CVCS, namely charging flow rate. Therefore, the cause-effect relationship knowedge is required to correctly answer the question.

ANSWER / DISTRACTOR ANALYSIS
A. Incorrect. Demand on the controller will decrease. Plausible because applicant may not have an indepth understanding of how the master controller will respond.
B. Incorrect. Charging flow will increase. Plausible because applicant may not have an indepth understanding of how the master controller will respond and applicant may have a misconception of how charging flow will initially react to the leaking aux spray valve.
C. Correct. There will be an initial pressure drop causing charging flow to intially go up. As pressure drops, the pcs will want more heaters to turn on, thus the demand on the master controller must lower.
D. Incorrect. Charging flow will increase. Plausible because applicant may have a misconception of how charging flow will initially react to the leaking aux spray valve.

REFERENCES
1. Surry 2004-301, 004A2.17: Original question that was modified for this exam.
2. Lesson Plan V-LO-TX-16001, Primary Systems Lesson Plan, Chapter 16, Rev. 3, Page 99.
3. 1C1, Window D03, PRZR PRESS LO PORV BLOCK, 08/01/2003, Page 23 of 40.

MCS	Time:	1	Points:	1.00	Version:	0 1 2 3 4 5 6 7 8 9	
					Answer:	C B C A C A C B D A	Scramble Range: A - D
Tier:		2			Group:	1	
Key Word:		PRESSURIZER PRESSURE			Cog Level:	C/A 2.9	
Source:		M			Exam:	VG05301	
Test:		R			Author/Reviewer:	MAB/RSB	

3. 010K1.06 001

The following Unit 1 conditions exist:

- Reactor is at 85% Rated Thermal Power
- PRZR PRESS CNTL SELECT Switch is selected to CH 455 / 456
- An Auxiliary Pressurizer Spray valve is leaking
- ~~1C1~~, Window D03, PRZR PRESS LO PORV BLOCK annunciates
  ALB012

Which ONE of the following correctly describes the affect on charging flow and the pressurizer pressure control system?

A. Charging flow rate initially increases. Ensure the demand on the Pressurizer Pressure Master Controller increases.

B. Charging flow rate initially decreases. Ensure the demand on the Pressurizer Pressure Master Controller increases.

C. Charging flow rate initially increases. Ensure the demand on the Pressurizer Pressure Master Controller decreases.

D. Charging flow rate initially decreases. Ensure the demand on the Pressurizer Pressure Master Controller decreases.

The pzr aux spray valve has started leaking

K/A
010 Pressurizer Pressure Control
K1.06 Knowledge of the physical connections and / or cause-effect relationships between the PRZ PCS and the following systems: CVCS.

K/A MATCH ANALYSIS
The aux spray is part of the pzr pcs. This question tests the applicants knowledge of how a malfunction in the pzr pcs will impact the CVCS, namely charging flow rate. Therefore, the cause-effect relationship knowedge is required to correctly answer the question.

ANSWER / DISTRACTOR ANALYSIS
A. Incorrect. Demand on the controller will decrease. Plausible because applicant may not have an indepth understanding of how the master controller will respond.
B. Incorrect. Charging flow will increase. Plausible because applicant may not have an indepth understanding of how the master controller will respond and applicant may have a misconception of how charging flow will initially react to the leaking aux spray valve.
C. Correct. There will be an initial pressure drop causing charging flow to intially go up. As pressure drops, the pcs will want more heaters to turn on, thus the demand on the master controller must lower.
D. Incorrect. Charging flow will increase. Plausible because applicant may have a misconception of how charging flow will initially react to the leaking aux spray valve.

REFERENCES
1. Surry 2004-301, 004A2.17: Original question that was modified for this exam.
2. Lesson Plan V-LO-TX-16001, Primary Systems Lesson Plan, Chapter 16, Rev. 3, Page 99.
3. 1C1, Window D03, PRZR PRESS LO PORV BLOCK, 08/01/2003, Page 23 of 40.

MCS	Time:	1	Points:	1.00	Version:	0 1 2 3 4 5 6 7 8 9	
					Answer:	C B C A C A C B D A	Scramble Range: A - D
Tier:		2			Group:	1	
Key Word:		PRESSURIZER PRESSURE			Cog Level:	C/A 2.9	
Source:		M			Exam:	VG05301	
Test:		R			Author/Reviewer:	MAB/RSB	

the insurge, reduces the time to feel the impact of the heaters in effect limiting the size of the pressure reduction.

If the pressure transients exceed the capability of the pressurizer sprays, two power-operated relief valve (PORVs) will open. The PORVs are solenoid piloted steam operated valves that relieve to the PRT.

The pressurizer pressure control uses a master controller that compares actual pressurizer pressure from one of the selected pressure channels to the reference pressure of 2235 psig. If there is a difference, the controller will energize the heaters or open the pressurizer spray. The master controller is a proportional plus integral controller. Because of this, its output is dependent on the magnitude of the difference and the integrated time that the difference is present.

Normally, the master controller has an output of approximately 25%, controlling pressure at 2235 psig. At 25% controller output, the proportional heaters are approximately 50% (200 kW) energized. This is necessary to account for the depressurizing effects from pressurizer bypass spray and ambient heat losses. As pressurizer pressure increases to 2250 psig, control heater power gradually decreases turning the proportional heaters off. As the error increases to 2260 psig, a controller output of 40.6%, pressurizer spray valves begin to open. If pressurizer pressure continues to increase, the spray valves will be fully open at 2310 psig with a controller output of 71.9%. Pressurizer pressure can be lowered manually by depressing the up arrow on PIC-455A (Pressurizer Master Pressure Controller) which will increase the controller output. This produces the same responses as the automatic control.

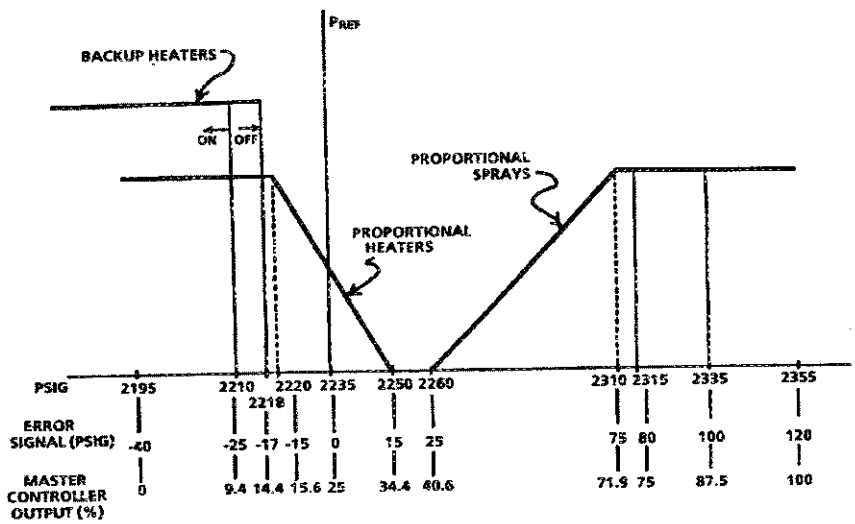

The controller output will decrease as pressurizer pressure decreases. As pressure decreases below 2235 psig, the controller output decreases below 25%. More power is supplied to the proportional heaters until they are fully energized at 2220 psig (controller output at 15.6%). If pressure continues to decrease, the backup heaters will energize at 2210 psig (9.4% output). When pressure returns to 2218 psig (14.4%percent output), the backup heaters de-energize. Pressurizer pressure can be raised manually by depressing the down arrow on 1-PIC-455A (Pressurizer Pressure Controller) to lower the controller output.

It is important to remember that the pressure set points discussed above may not be the exact set points that the respective pressurizer pressure control component will actuate. The integral portion of the master controller will modify the output signal for as the pressure error signal integrates (builds up). As the difference between the set point and actual pressure persists, the output of the controller continues to increase. In anticipation of the possible pressure transient that may occur, the pressurizer pressure controller actuates heaters and sprays before the pressure set points are reached.

WINDOW D03

ORIGIN	SETPOINT	PRZR PRESS LO PORV BLOCK
Any 2 of the following: 1-PT-0455 1-PT-0456 1-PT-0457 1-PT-0458	2185 psig	

1.0 PROBABLE CAUSE

1. RCS pressure transient during plant startup or shutdown.

2. RCS Pressure Control malfunction.

2.0 AUTOMATIC ACTIONS

PRZR PORV 455A and 456A BLOCK VALVES 1-HV-8000A and 1-HV-8000B are blocked from opening, and will close if open with their handswitches in the auto position.

3.0 INITIAL OPERATOR ACTIONS

NONE

4.0 SUBSEQUENT OPERATOR ACTIONS

1. ENSURE Block Valves are closed.

2. ENSURE Pressurizer Pressure Control System is responding to restore pressure.

3. If a failure has occurred in the Pressurizer Pressure Control System, REFER to 18001-C, "Primary Systems Instrumentation Malfunction".

4. If RCS pressure decrease is due to excessive steam demand, CHECK Steam Dumps and Atmospheric Relief Valves closed.

5. If equipment failure is indicated, INITIATE maintenance as required.

5.0 COMPENSATORY OPERATOR ACTIONS

NONE

END OF SUB-PROCEDURE

REFERENCES: 1X4DB112, 1X6AA02-230, 1X6AU01-168; PLS

QUESTIONS REPORT
for 2-9 SURRY 2004-301 FINAL

1. 004A2.17 001

The following Unit 1 conditions exist:
- Operating at 85% power
- Pressurizer pressure control is in its normal configuration
- A Pressurizer Safety Valve is leaking
- 1C-B8, PRZR LO PRESS, annunciates
- 1-AP-31.00, Increasing or Decreasing RCS Pressure, has been entered

Which ONE of the following correctly describes the affect on charging flow and an appropriate mitigating action in accordance with 1-AP-31.00?

A. Charging flow initially increases. Place the PRZR PRESS MASTER CNTRL in MANUAL and increase the demand to try to stop the pressure decrease.

B. Charging flow initially decreases. Place the PRZR PRESS MASTER CNTRL in MANUAL and increase the demand to try to stop the pressure decrease.

C. Charging flow initially increases. Place the PRZR PRESS MASTER CNTRL in MANUAL and decrease the demand to try to stop the pressure decrease.

D. Charging flow initially decreases. Place the PRZR PRESS MASTER CNTRL in MANUAL and decrease the demand to try to stop the pressure decrease.

Surry

References:
ND-93.3-LP-5, Pressurizer Pressure Control, Rev. 9
ND-88.3-LP-2, Charging and Letdown, Rev. 10
1-AP-31.00, Increasing or Decreasing RCS Pressure, Rev. 4

Distractor Analysis:
A. Incorrect because increasing the demand will lower pressure, not increase it.
B. Incorrect because charging flow will not initially decrease and increasing the demand will lower pressure, not increase it.
C. Correct because charging flow will initially increase due to the sudden pressure drop in the RCS. Also, decreasing the demand on the controller while in manual will act to try to raise pressure.
D. Incorrect because charging flow will not initially decrease.

004 Chemical and Volume Control
A2.17: Ability to (a) predict the impacts of the following malfunctions or operations on the CVCS; and (b) based on those predictions use procedures to correct, control, or mitigate the consequences of those malfunctions or operations: Low PZR pressure.

QUESTIONS REPORT
for 2-9 SURRY 2004-301 FINAL

Tier:	2	Group:	1
Key Word:	CVCS	Cog Level:	C/A 3.4/3.7
Source:	N	Exam:	SR04301
Test:	R	Author / Reviewer:	MAB/SDR

13. 011EA2.07 001

The following Unit 1 conditions exist:

- A Large Break LOCA and Loss of Offsite Power has occurred.
- The 'A' Diesel Generator failed to start.
- The crew has completed Cold Leg Recirc per 19013-C, Transfer to Cold Leg Recirculation, with the 'B' RHR Pump in operation.
- RCS temperature is 145 °F and stable.
- The CCW supply to the 'B' RHR Pump seal package has ruptured.

Which ONE of the following correctly states the actions required to mitigate the above conditions?

A. The 'B' RHR pump must be secured to avoid seal damage. Use a steam generator to remove RCS heat.

B. The 'B' RHR pump must be secured to avoid seal damage. Use safety injection pumps to remove RCS heat.

C. The 'B' RHR pump must be secured to avoid seal damage. Use charging pumps to remove RCS heat.

D. Continue to operate the 'B' RHR pump to remove RCS heat.

K/A
011 Large Break LOCA
EA2.07 Ability to determine or interpret the following as they apply to a Large Break LOCA: That equipment necessary for functioning or critical pump water seals is operable.

K/A MATCH ANALYSIS
The question tests knowledge of whether CCW is needed to support operation of the RHR pumps following a post-LOCA cooldown. CCW is relied upon to cool the seal packages (seal provides boundary for RCS water) of the RHR pumps when RCS temp is above a certain value.

ANSWER / DISTRACTOR ANALYSIS
A. Incorrect. The RHR pump can continue to run with RCS temp < 150 F. Plausible because an applicant may think that the seal could be damaged with no CCW flow.
B. Incorrect. The RHR pump can continue to run with RCS temp < 150 F. Plausible because an applicant may think that the seal could be damaged with no CCW flow.
C. Incorrect. The RHR pump can continue to run with RCS temp < 150 F. Plausible because an applicant may think that the seal could be damaged with no CCW flow.
D. Correct. The RHR pump can continue to run with RCS temp < 150 F.

The word "must" is used in the distractors to try to make it clear that the pump, if allowed to run, will have seal damage.

REFERENCES
1. V-LO-TX-12101, Residual Heat Removal System, Rev. 1.0.
2. 19013-C, ES-1.3 Transfer to Cold Leg Recirc, Rev. 24, 04/08/2004.

MCS	Time:	1	Points:	1.00	Version:	0 1 2 3 4 5 6 7 8 9	
					Answer:	D D A C A D C D A B	Scramble Range: A - D
Tier:		1			Group:	1	
Key Word:		RHR PUMP SEAL COOL			Cog Level:	C/A 3.2	
Source:		N			Exam:	VG05301	
Test:		R			Author/Reviewer:	MAB/RSB	

13. 011EA2.07 001

The following Unit 1 conditions exist:

- A Large Break LOCA and Loss of Offsite Power has occurred.
- The 'A' Diesel Generator failed to start.
- The crew has completed Cold Leg Recirc per 19013-C, Transfer to Cold Leg Recirculation, with the 'B' RHR Pump in operation.
- RCS temperature is 145 °F and stable.
- The CCW supply to the 'B' RHR Pump seal package has ruptured.

Which ONE of the following correctly states the actions required to mitigate the above conditions?

A. The 'B' RHR pump must be secured to avoid seal damage. Use a steam generator to remove RCS heat.

B. The 'B' RHR pump must be secured to avoid seal damage. Use safety injection pumps to remove RCS heat.

C. The 'B' RHR pump must be secured to avoid seal damage. Use charging pumps to remove RCS heat.

D. Continue to operate the 'B' RHR pump to remove RCS heat.

K/A
011 Large Break LOCA
EA2.07 Ability to determine or interpret the following as they apply to a Large Break LOCA: That equipment necessary for functioning or critical pump water seals is operable.

K/A MATCH ANALYSIS
The question tests knowledge of whether CCW is needed to support operation of the RHR pumps following a post-LOCA cooldown. CCW is relied upon to cool the seal packages (seal provides boundary for RCS water) of the RHR pumps when RCS temp is above a certain value.

ANSWER / DISTRACTOR ANALYSIS
A. Incorrect. The RHR pump can continue to run with RCS temp < 150 F. Plausible because an applicant may think that the seal could be damaged with no CCW flow.
B. Incorrect. The RHR pump can continue to run with RCS temp < 150 F. Plausible because an applicant may think that the seal could be damaged with no CCW flow.
C. Incorrect. The RHR pump can continue to run with RCS temp < 150 F. Plausible because an applicant may think that the seal could be damaged with no CCW flow.
D. Correct. The RHR pump can continue to run with RCS temp < 150 F.

The word "must" is used in the distractors to try to make it clear that the pump, if allowed to run, will have seal damage.

REFERENCES
1. V-LO-TX-12101, Residual Heat Removal System, Rev. 1.0.
2. 19013-C, ES-1.3 Transfer to Cold Leg Recirc, Rev. 24, 04/08/2004.

MCS	Time: 1	Points: 1.00	Version:	0 1 2 3 4 5 6 7 8 9		
			Answer:	D D A C A D C D A B	Scramble Range: A - D	
Tier:	1			Group:	1	
Key Word:	RHR PUMP SEAL COOL			Cog Level:	C/A 3.2	
Source:	N			Exam:	VG05301	
Test:	R			Author/Reviewer:	MAB/RSB	

4. 011EA2.07 001

The following Unit 1 conditions exist:

- A Large Break LOCA and Loss of Offsite Power has occurred.
- The 'A' Diesel Generator failed to start.
- The plant is on Cold Leg Recirc with the 'B' RHR Pump in operation.
- RCS temperature is 145 °F and stable.
- The CCW supply to the 'B' RHR Pump seal package has ruptured.

Which ONE of the following correctly states the actions required to mitigate the above conditions?

A. The 'B' RHR pump must be secured to avoid seal damage. Use a steam generator to remove RCS heat.

B. The 'B' RHR pump must be secured to avoid seal damage. Use safety injection pumps to remove RCS heat.

C. The 'B' RHR pump must be secured to avoid seal damage. Use charging pumps to remove RCS heat.

D. Continue to operate the 'B' RHR pump to remove RCS heat.

The crew has completed Cold leg Recirc per 19013-C, Transfer to Cold leg Recirculation, with the 'B' RHR pump in operation.

K/A
011 Large Break LOCA
EA2.07 Ability to determine or interpret the following as they apply to a Large Break LOCA: That equipment necessary for functioning or critical pump water seals is operable.

K/A MATCH ANALYSIS
The question tests knowledge of whether CCW is needed to support operation of the RHR pumps following a post-LOCA cooldown. CCW is relied upon to cool the seal packages (seal provides boundary for RCS water) of the RHR pumps when RCS temp is above a certain value.

ANSWER / DISTRACTOR ANALYSIS
A. Incorrect. The RHR pump can continue to run with RCS temp < 150 F. Plausible because an applicant may think that the seal could be damaged with no CCW flow.
B. Incorrect. The RHR pump can continue to run with RCS temp < 150 F. Plausible because an applicant may think that the seal could be damaged with no CCW flow.
C. Incorrect. The RHR pump can continue to run with RCS temp < 150 F. Plausible because an applicant may think that the seal could be damaged with no CCW flow.
D. Correct. The RHR pump can continue to run with RCS temp < 150 F.

The word "must" is used in the distractors to try to make it clear that the pump, if allowed to run, will have seal damage.

REFERENCES
1. V-LO-TX-12101, Residual Heat Removal System, Rev. 1.0.
2. 19013-C, ES-1.3 Transfer to Cold Leg Recirc, Rev. 24, 04/08/2004.

MCS	Time:	1	Points:	1.00	Version:	0 1 2 3 4 5 6 7 8 9	
					Answer:	D D A C A D C D A B	Scramble Range: A - D
Tier:		1			Group:	1	
Key Word:		RHR PUMP SEAL COOL			Cog Level:	C/A 3.2	
Source:		N			Exam:	VG05301	
Test:		R			Author/Reviewer:	MAB/RSB	

QUESTIONS REPORT
for Vogtle 2005-301 Draft

1. 011EA2.07 001

The following Unit 1 conditions exist:

- A Large Break LOCA and Loss of Offsite Power has occurred.
- The 'A' Diesel Generator failed to start.
- The plant is on RHR cooling (prior approval from TSC was obtained) with the 'B' RHR Pump in operation.
- RCS temperature is 145 °F and stable.
- The CCW supply to the 'B' RHR Pump seal package has ruptured.

Which ONE of the following correctly states the actions required to mitigate the above conditions?

A. The 'B' RHR pump must be secured to avoid seal damage. Use a steam generator to remove RCS heat.

B. The 'B' RHR pump must be secured to avoid seal damage. Use safety injection pumps to remove RCS heat.

C. The 'B' RHR pump must be secured to avoid seal damage. Use charging pumps to remove RCS heat.

D. Continue to operate the 'B' RHR pump to remove RCS heat.

Add proc.

Look @

Consider Rx Sump Recirc.

K/A
011 Large Break LOCA
EA2.07 Ability to determine or interpret the following as they apply to a Large Break LOCA: That equipment necessary for functioning or critical pump water seals is operable.

K/A MATCH ANALYSIS
The question tests knowledge of whether CCW is needed to support operation of the RHR pumps following a post-LOCA cooldown. CCW is relied upon to cool the seal packages (seal provides boundary for RCS water) of the RHR pumps when RCS temp is above a certain value.

ANSWER / DISTRACTOR ANALYSIS
A. Incorrect. The RHR pump can continue to run with RCS temp < 150 F. Plausible because an applicant may think that the seal could be damaged with no CCW flow.
B. Incorrect. The RHR pump can continue to run with RCS temp < 150 F. Plausible because an applicant may think that the seal could be damaged with no CCW flow.
C. Incorrect. The RHR pump can continue to run with RCS temp < 150 F. Plausible because an applicant may think that the seal could be damaged with no CCW flow.
D. Correct. The RHR pump can continue to run with RCS temp < 150 F.

The word "must" is used in the distractors to try to make it clear that the pump, if allowed to run, will have seal damage.

REFERENCES
1. V-LO-TX-12101, Residual Heat Removal System, Rev. 1.0.
2. 19012-C, ES-1.2 Post -LOCA Cooldown and Depressuization, Rev. 26.1, 02/18/2004.

MCS	Time:	1	Points:	1.00	Version:	0 1 2 3 4 5 6 7 8 9	
					Answer:	D D A C A D C D A B	Scramble Range: A - D

Tier:	1	Group:	1
Key Word:	RHR PUMP SEAL COOL	Cog Level:	C/A 3.2
Source:	N	Exam:	VG05301
Test:	R	Author/Reviewer:	MAB/RSB

A number of RHR valves have a vent hole drilled in one side of the disk to prevent pressure locking. Operations MUST consider the sealing limitations of these valves when preparing equipment clearances.

6.4 SYSTEM INTERFACES

RCS - Hot legs 1, 4 Cold Legs 1,2,3,4

RWST - Normal ECCS suction source during initial Cold Leg Injection phase of ECCS. RWST also provides a water volume for cavity fill and cavity/RCS draining to support refueling and outage activities.

CNMT - Emergency Sumps in containment are aligned to RHR pump suctions during cold and hot leg recirculation modes of operation

CVCS - RHR letdown to the CVCS for RCS pressure control and purification

PRESSURIZER RELIEF TANK (PRT) - RHR pump suction relief valves discharge to the PRT inside containment

RECYCLE HOLDUP TANK (RHUT) - RHRS discharge relief valves relieve to the RHUT

NSCW - Removes heat from the CCW system via the tube side of the CCW heat exchangers and thus the "Ultimate" heat sink for RHR. Also cools the RHR pump motors (Air -to-water motor coolers)

CCW - Shell side cooling source for the RHRS heat exchangers. Also cools the seal packages on the RHR pumps.

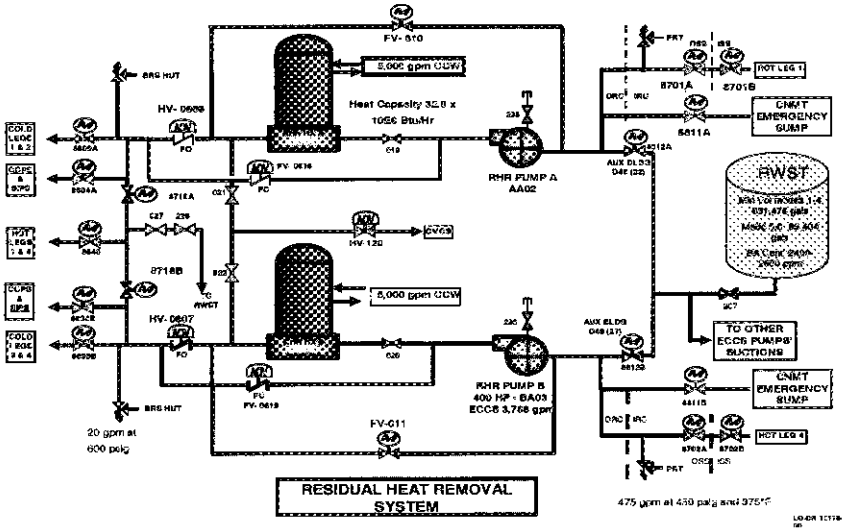

Each inlet line to the RHRS is equipped with a pressure relief valve which relieves to the PRT (**450psig at 375 Deg F**). These relief valves protect the system from inadvertent over- pressurization during plant startup, shutdown, and cold shutdown decay heat-removal operations. Also each pump suction line is fitted with a high point vent valve which the operator can open from the main control board.

Each discharge line from the RHRS to the RCS is equipped with a **600 psig/20 gpm pressure relief valve designed to relieve the maximum possible back-leakage through the check valves isolating the RHRS from the RCS**. These relief valves discharge to the Recycle Holdup Tank (RHUT).

The RHR pumps are Westinghouse 400HP, single stage centrifugal. Design pressure is 600 psig and 400 DEG F. The design flow rates are 3000 gpm for shutdown cooling nd 3788 gpm for ECCS flow. Pumps will auto start on an SI signal (Train related) if hand switches are in Auto. Power supplies are ESF bus AA02 and BA03 for train A and B respectively. Pumps can be controlled from the QMCB or from the respective train shutdown panels. Pump motors are cooled by NSCW and pump seals are cooled by CCW. CCW seal cooling is not required to run pumps if RCS temperature is <150 Deg F.

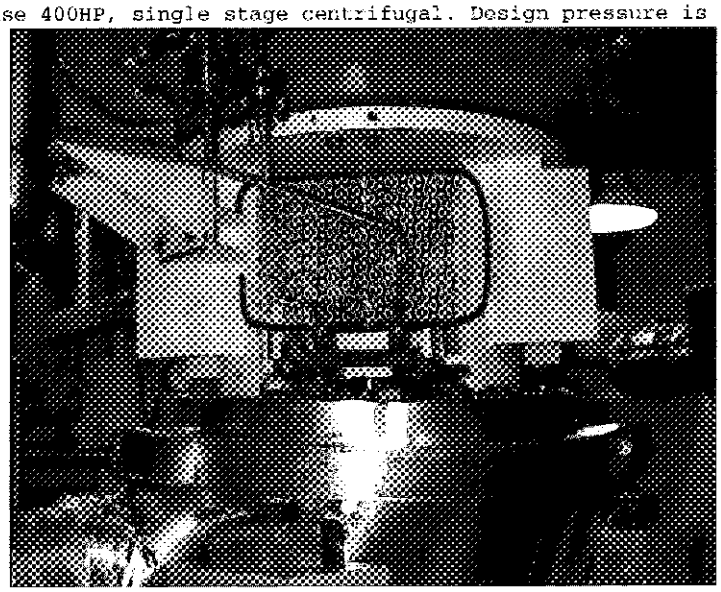

Pumps are physically located on "D" level of the Aux Building (124' Elev)

ACTION/EXPECTED RESPONSE	RESPONSE NOT OBTAINED
NOTE: COPS should be armed when RCS WR cold leg temperature is less than 350°F.	
*31. Check if RHR system can be placed in service:	
a. Check RCS WR hot leg temperatures - LESS THAN 350°F.	a. Go to Step 32.
b. Check RCS pressure - LESS THAN 350 PSIG.	b. Go to Step 32.
c. Consult TSC to determine if RHR system should be placed in service. If approved to place RHR in service, initiate 13011, RESIDUAL HEAT REMOVAL SYSTEM.	
*32. Check hydrogen concentration:	
a. Current hydrogen concentration measurement - AVAILABLE.	a. Obtain a hydrogen concentration measurement by initiating 13130, POST ACCIDENT HYDROGEN CONTROL WHEN hydrogen concentration measurement available, THEN perform Step 32b.
b. Hydrogen concentration - LESS THAN 6.0%.	b. Consult TSC on methods to reduce hydrogen concentration inside containment. WHEN hydrogen concentration less than 6.0%, THEN perform Step 32c.
c. Hydrogen concentration - LESS THAN 0.5%.	c. Start one hydrogen recombiner system by initiating 13130, POST ACCIDENT HYDROGEN CONTROL.

14. 012K1.07 001

The following Unit 1 conditions exist:

- Initial Reactor power was 51% Rated Thermal Power
- An Anticipated Transient Without Trip (ATWT) occurred (Turbine Trip without Reactor Trip)
- Tavg-Tref deviation is 20°F
- Crew has not yet manipulated any Steam Dump controls.
- The Balance of Plant operator reports that Steam Dump Banks 1, 2, 3 and 4 are fully open.

Which ONE of the following correctly describes the responses of the Steam Dump System with the current plant conditions?

A.✓ The steam dump system is operating properly.

B. Banks 1, 2, and 3 should be full open. Bank 4 should be closed.

C. Banks 1 and 2 should be full open. Bank 3 should be in a throttled position. Bank 4 should be closed.

D. All 4 banks should be closed.

K/A
012 Reactor Protection
K1.07 Knowledge of the physical connections and / or cause effect relationships between the RPS and the following systems: SDS.

K/A MATCH ANALYSIS
The RPS interfaces with the steam dumps via the position of the rx trip bkrs and rx trip bypass bkrs. The ATWS provides information on the rx trip bkr position that will dictate which controller the SDS utilizes.

ANSWER / DISTRACTOR ANALYSIS
A. Correct. Rx Trip Bkrs and Bypass Bkrs are still closed. This causes the Load Rejection Controller to be utilized as opposed to the Rx Trip Controller. At 20°F temp deviation all 4 banks of dumps will be fully open. Therefore, the SDS is operating properly.
B. Incorrect. See explanation in correct answer. Plausible because Bank 4 would not be open if on Plant Trip Controller.
C. Incorrect. See explanation in correct answer. Plausible because Bank 4 would not be fully open and Bank 3 would likely be throttled if Plant Trip Controller were being utilized.
D. Incorrect. See explanation in correct answer. Plausible because applicant may overlook the fact that there is an arming signal, C-7, associated with the load rejection.

REFERENCES
1. Lesson Plan V-LO-TX-21201, Steam Dumps, Rev. 1.
2. Lesson Plan V-LO-TX-28101, RPS-SSPS--AMSAC, Rev. 3.
3. Lesson Plan V-LO-TX-21101, Main Steam, Rev. 4.
4. VCSummer Exam Question 029EK2.06, SM04301.

MCS	Time:	1	Points:	1.00	Version:	0 1 2 3 4 5 6 7 8 9	
					Answer:	A D D D A A D A C C	Scramble Range: A - D
Tier:		2			Group:	1	
Key Word:		STEAM DUMP RPS PORV			Cog Level:	C/A 3.2	
Source:		M			Exam:	VG05301	
Test:		R			Author/Reviewer:	MAB/RSB	

14. 012K1.07 001

The following Unit 1 conditions exist:

- Initial Reactor power was 47% Rated Thermal Power
- An Anticipated Transient Without Trip (ATWT) occurred (Turbine Trip without Reactor Trip)
- Tavg-Tref deviation is 20°F
- Crew has not yet manipulated any Steam Dump controls.
- The Balance of Plant operator reports that Steam Dump Banks 1, 2, 3 and 4 are fully open.

Which ONE of the following correctly describes the responses of the Steam Dump System with the current plant conditions?

A. The steam dump system is operating properly.

B. Banks 1, 2, and 3 should be full open. Bank 4 should be closed.

C. Banks 1 and 2 should be full open. Bank 3 should be in a throttled position. Bank 4 should be closed.

D. All 4 banks should be closed.

K/A
012 Reactor Protection
K1.07 Knowledge of the physical connections and / or cause effect relationships between the RPS and the following systems: SDS.

K/A MATCH ANALYSIS
The RPS interfaces with the steam dumps via the position of the rx trip bkrs and rx trip bypass bkrs. The ATWS provides information on the rx trip bkr position that will dictate which controller the SDS utilizes.

ANSWER / DISTRACTOR ANALYSIS
A. Correct. Rx Trip Bkrs and Bypass Bkrs are still closed. This causes the Load Rejection Controller to be utilized as opposed to the Rx Trip Controller. At 20°F temp deviation all 4 banks of dumps will be fully open. Therefore, the SDS is operating properly.
B. Incorrect. See explanation in correct answer. Plausible because Bank 4 would not be open if on Plant Trip Controller.
C. Incorrect. See explanation in correct answer. Plausible because Bank 4 would not be fully open and Bank 3 would likely be throttled if Plant Trip Controller were being utilized.
D. Incorrect. See explanation in correct answer. Plausible because applicant may overlook the fact that there is an arming signal, C-7, associated with the load rejection.

REFERENCES
1. Lesson Plan V-LO-TX-21201, Steam Dumps, Rev. 1.
2. Lesson Plan V-LO-TX-28101, RPS-SSPS--AMSAC, Rev. 3.
3. Lesson Plan V-LO-TX-21101, Main Steam, Rev. 4.
4. VCSummer Exam Question 029EK2.06, SM04301.

MCS	Time:	1	Points:	1.00	Version:	0 1 2 3 4 5 6 7 8 9	
					Answer:	A D D D A A D A C C	Scramble Range: A - D
Tier:		2			Group:	1	
Key Word:		STEAM DUMP RPS PORV			Cog Level:	C/A 3.2	
Source:		M			Exam:	VG05301	
Test:		R			Author/Reviewer:	MAB/RSB	

5. 012K1.07 001

The following Unit 1 conditions exist:

- Initial Reactor power was 47% Rated Thermal Power
- An Anticipated Transient Without ~~Scram~~ Trip (ATW~~S~~T) occurred (Turbine Trip without Reactor Trip)
- Tavg-Tref deviation is 20°F
- Crew has not yet manipulated any Steam Dump controls.
- The Balance of Plant operator reports that Steam Dump Banks 1, 2, 3 and 4 are fully open.

Which ONE of the following correctly describes the responses of the Steam Dump System with the current plant conditions?

A. ✓ The steam dump system is operating properly.

B. Banks 1, 2, and 3 should be full open. Bank 4 should be closed.

C. Banks 1 and 2 should be full open. Bank 3 should be in a throttled position. Bank 4 should be closed.

D. All 4 banks should be closed.

K/A
012 Reactor Protection
K1.07 Knowledge of the physical connections and / or cause effect relationships between the RPS and the following systems: SDS.

K/A MATCH ANALYSIS
The RPS interfaces with the steam dumps via the position of the rx trip bkrs and rx trip bypass bkrs. The ATWS provides information on the rx trip bkr position that will dictate which controller the SDS utilizes.

ANSWER / DISTRACTOR ANALYSIS
A. Correct. Rx Trip Bkrs and Bypass Bkrs are still closed. This causes the Load Rejection Controller to be utilized as opposed to the Rx Trip Controller. At 20°F temp deviation all 4 banks of dumps will be fully open. Therefore, the SDS is operating properly.
B. Incorrect. See explanation in correct answer. Plausible because Bank 4 would not be open if on Plant Trip Controller.
C. Incorrect. See explanation in correct answer. Plausible because Bank 4 would not be fully open and Bank 3 would likely be throttled if Plant Trip Controller were being utilized.
D. Incorrect. See explanation in correct answer. Plausible because applicant may overlook the fact that there is an arming signal, C-7, associated with the load rejection.

REFERENCES
1. Lesson Plan V-LO-TX-21201, Steam Dumps, Rev. 1.
2. Lesson Plan V-LO-TX-28101, RPS-SSPS--AMSAC, Rev. 3.
3. Lesson Plan V-LO-TX-21101, Main Steam, Rev. 4.
4. VCSummer Exam Question 029EK2.06, SM04301.

MCS	Time: 1	Points: 1.00	Version:	0 1 2 3 4 5 6 7 8 9	
			Answer:	A D D D A A D A C C	Scramble Range: A - D
Tier:	2		Group:	1	
Key Word:	STEAM DUMP RPS PORV		Cog Level:	C/A 3.2	
Source:	M		Exam:	VG05301	
Test:	R		Author/Reviewer:	MAB/RSB	

STEAM DUMP CONTROL SYSTEM

TABLE OF CONTENTS

I. INTRODUCTION AND GENERAL DESCRIPTION

II. INSTRUMENTATION AND CONTROL

III. OPERATIONS

IV. TECHNICAL SPECIFICATIONS

V. Questions

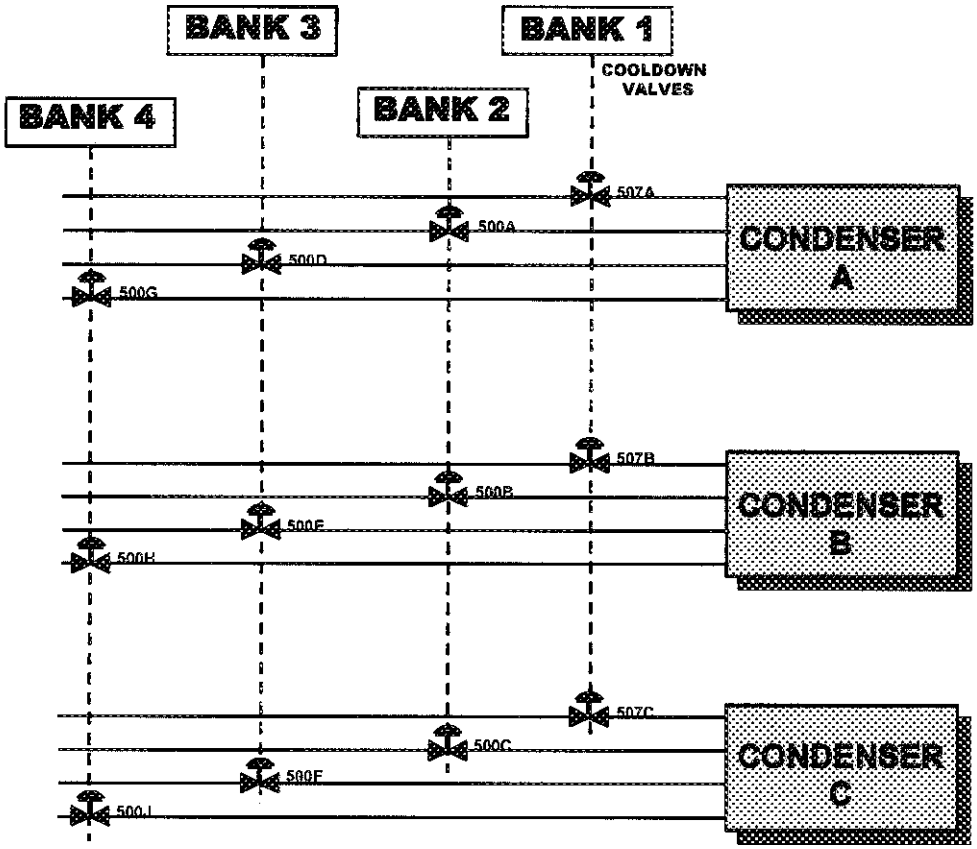

STEAM DUMP PIPING ARRANGEMENT

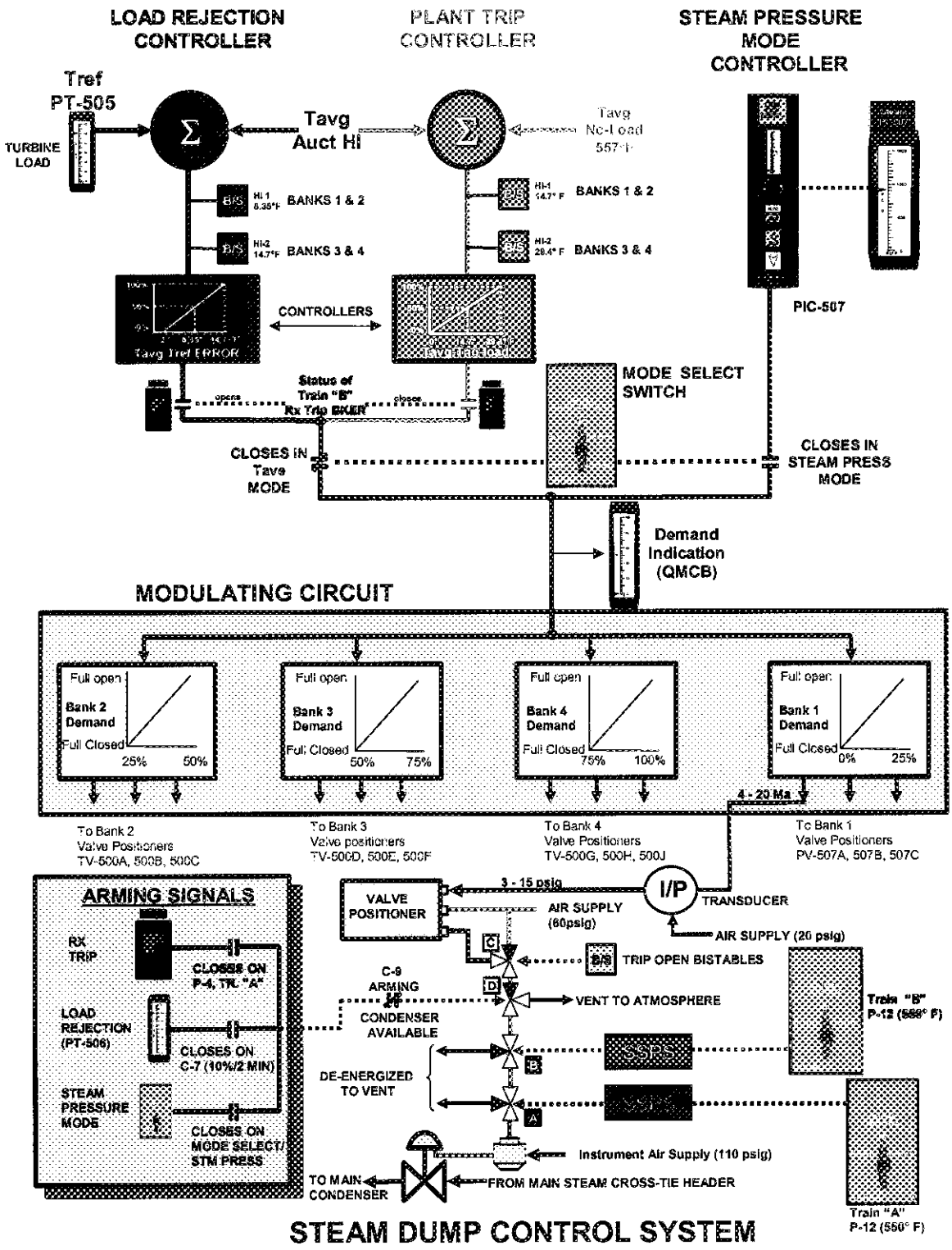

STEAM DUMP CONTROL SYSTEM

Load Rejection Controller:

The purpose of the "Load Rejection Controller" is to operate in conjunction with the "Rod Control System" quickly return auctioneered high T_{ave} to T_{ref} following a load rejection of greater than or equal to 10 percent of rated load in 2 minutes. The controller is provided continuous inputs from auctioneered high T_{avg} and T_{ref} (PT-505). The two inputs are summed and an error signal is generated. This error signal is directly proportional to the mismatch between reactor power and main turbine power. The error signal is then sent to the Load Rejection Controller and the Trip Open Bistables.

The controller is programmed such that it will not produce an output until the difference between auctioneered high T_{avg} and T_{ref} (PT-505) is greater than 2°F. This deadband allows the Rod Control System to return T_{ref} to auctioneered high T_{avg}.

When the error signal is greater than 2°F, the controller provides a continuous output signal. This output signal is provided to the modulating circuits. The steam dump mode select switch must be in the TAVG position and the reactor must not be tripped (no Train "B" P-4 signal preset) in order for this signal to be utilized. If these conditions are met, the modulating circuits will receive the output of the controller.

If the difference between auctioneered high T_{avg} and T_{ref} is more than 2°F, the load rejection controller will produce an output. This is true for all plant conditions. External circuits (steam dump mode select switch, P-4) determines if the output of the controller will be utilized by the trip open bistables and the modulating circuit.

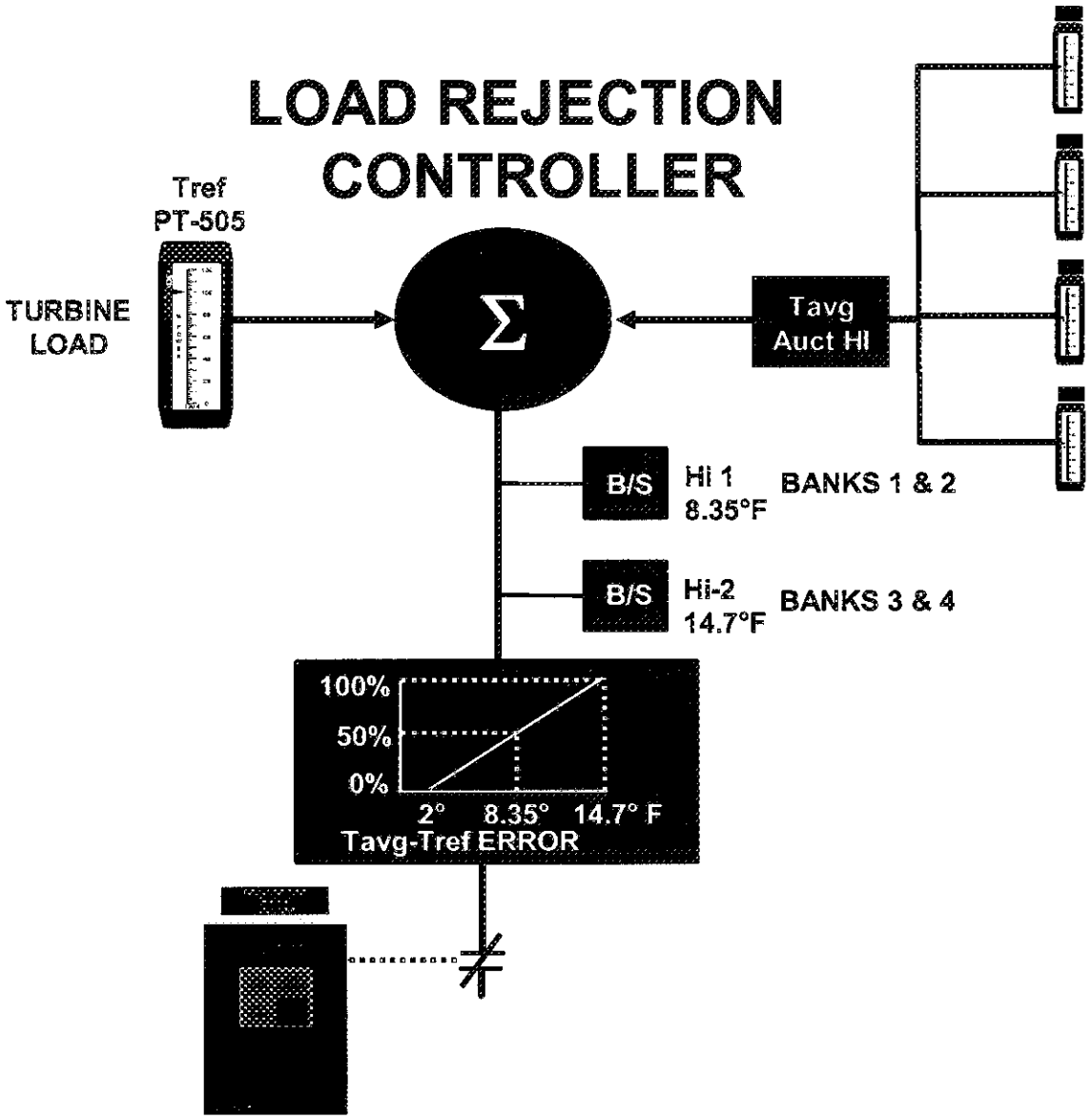

Plant Trip Controller:

The purpose of the plant trip controller is to quickly return auctioneered high Tavg to no load T_{avg} (557°F.) following a reactor trip. The controller is provided with a continuous input from auctioneered high T_{avg}. This input is summed with an internal setpoint of 557°F to produce a temperature error signal. This temperature error signal is directly proportional to the mismatch between auctioneered high T_{avg} and no load T_{avg}.

The controller is programmed to produce an output if any temperature error signal exists. A deadband is not employed since

all control rods have been tripped into the core. The error signal is provided to the trip open bistables and the modulating circuits, provided the reactor is tripped (Train A P-4) and the steam dump mode select switch is in the TAVG position.

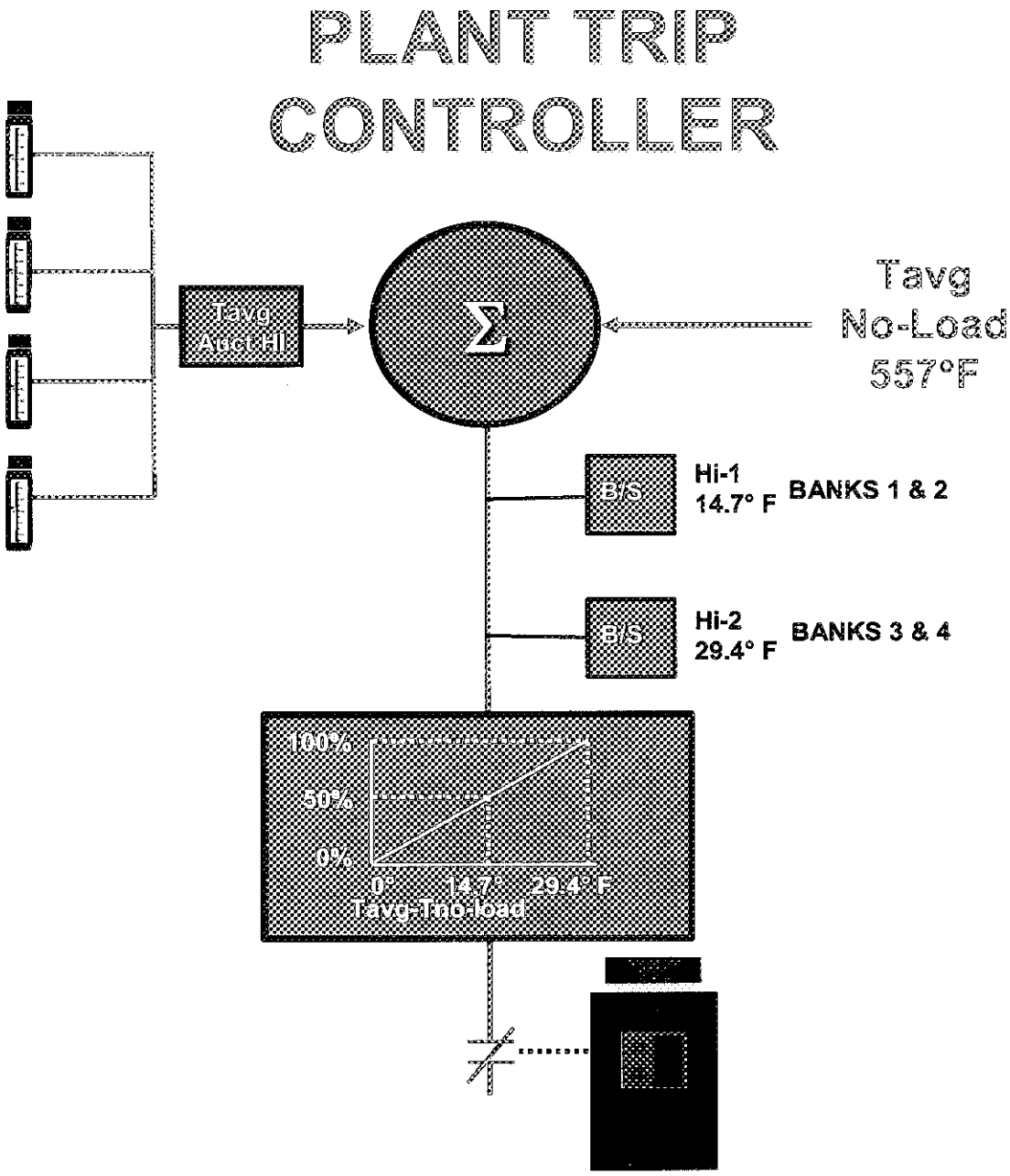

Modulating Circuit:

The purpose of the modulating circuit is to produce an output control signal in response to an input signal. Inputs are provided from either the header pressure, load rejection or plant trip controller. The response of the modulating circuit is the same for either input.

Four modulation circuits are provided, one for each bank. Each modulating circuit is programmed to begin producing an output at a different level of the input signal. This sequential operation of the modulating circuit causes the banks of steam dump valves to also open sequentially. Sequential operation of the steam dump valves is desirable. This will minimize excessive cooldown for small transients yet provide the full capacity of the steam dumps for large transients.

The modulating circuits are programmed such that when the in-service controller output is between 0 to 25 percent of the controller operating range, bank No. 1 steam dumps are modulated from full close to full open. When the in-service controller output is between 25 to 50 percent of the controller operating range, bank No. 2 is modulated from full closed to full open. Banks No. 3 and No. 4 operate identically to Banks No. 1 and No. 2, except that they modulate from the full close to the full open position between 50 to 75 percent and 75 to 100 percent of the controller's output respectfully. The banks will modulate closed in the reverse sequence (Bank 4, 3, 2, 1).

The output of each modulating circuit is three 4-20 milliamp control signals. The control signals are applied to the three I/P transducers for the three steam dump valves in that bank.

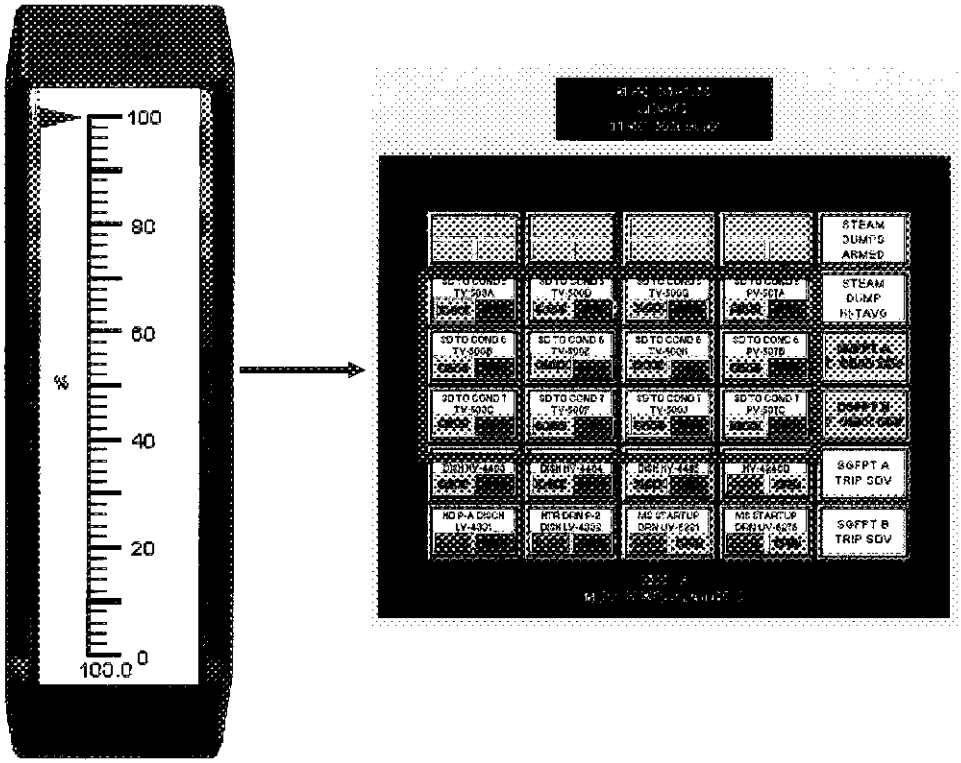
100
80
60
%
40
20
0
100.0
STEAM DUMPS ARMED
STEAM DUMP INTAVG
SGFPT A TRIP SOV
SGFPT B TRIP SOV

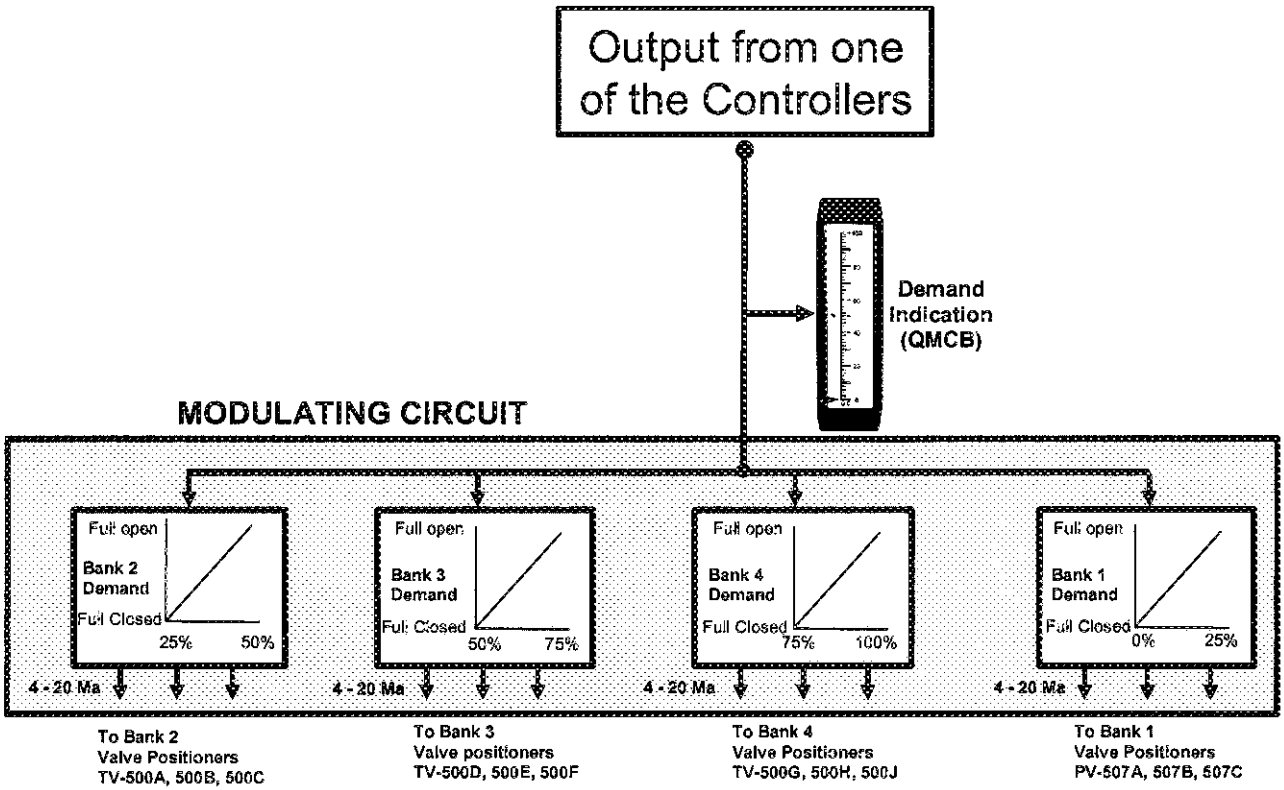
Output from one of the Controllers
Demand Indication (QMCB)
MODULATING CIRCUIT
Full open
Bank 2 Demand
Full Closed
25%
50%
Full open
Bank 3 Demand
Full Closed
50%
75%
Full open
Bank 4 Demand
Full Closed
75%
100%
Full open
Bank 1 Demand
Full Closed
0%
25%
4 - 20 Ma
4 - 20 Ma
4 - 20 Ma
4 - 20 Ma
To Bank 2 Valve Positioners TV-500A, 500B, 500C
To Bank 3 Valve positioners TV-500D, 500E, 500F
To Bank 4 Valve Positioners TV-500G, 500H, 500J
To Bank 1 Valve Positioners PV-507A, 507B, 507C

The figure two pages over is a simplified diagram of the Steam Dump Control System. As you can see, there are three controllers that can be used to position the steam dump valves. The **"STEAM PRESSURE MODE CONTROLLER"** provides an input to the modulating circuit when operating in the **"STEAM PRESSURE MODE"** normally used during plant startup, shutdown, and cooldown operations. An input from either the **"LOAD REJECTION CONTROLLER"** or the **"PLANT TRIP CONTROLLER"** is provided to the modulating circuit when in the **"TAVG MODE"** and is normally used during power operations.

The status of the **"Train "B" Reactor Trip Breaker** determines which controller will provide an input to the modulating circuit.

- Both **Train "B" Reactor Trip Breaker (RTB)and Train "B" Bypass Breaker (BYB)** **OPEN** the **"Plant Trip Controller"** controls the steam dump valves; this is often referred to as P-4.

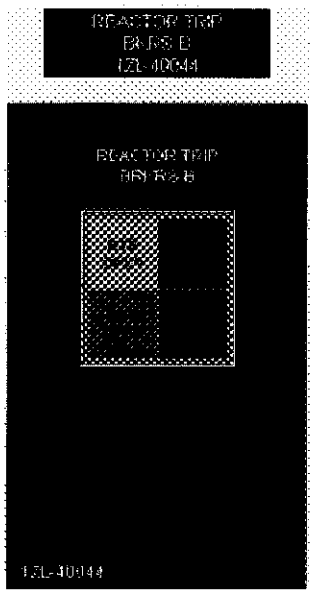

- **Train "B" Reactor Trip Breaker (RTB) or Train "B" Bypass Breaker (BYB)** **CLOSED** the **"LOAD REJECTION CONTROLLER"** controls the steam dump valves.

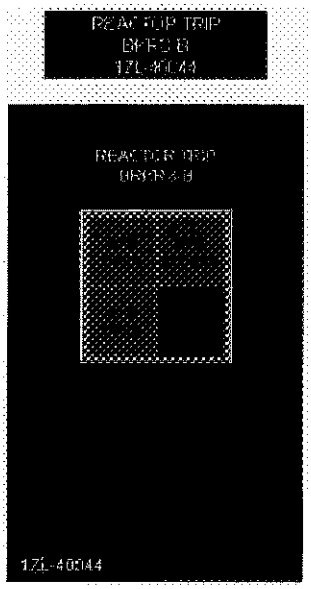

SECTION B

REACTOR TRIP AND ESFAS SIGNALS

28.11 PERMISSIVE INTERLOCKS

Permissive interlocks provide input to the protection systems to allow or prevent protective functions from occurring under certain plant conditions.

P-4 **Indicates reactor tripped**

Set point or conditions that give P-4

RTA and its bypass (BYA) both open give P-4 Train A
RTB and its bypass (BYB) both open give P-4 Train B

Function:

1) **Trips** the Main Turbine to limit the RCS cool down

   - P-4 Train A generates a "Mechanical Turbine Trip"

   - P-4 Train B generates an "Electrical Turbine Trip"

2) Steam Dumps

   - P-4 Train A generates a Steam Dump Arming signal

   - P-4 Train B transfers Steam Dump controllers from "Load reject" mode to the "Plant trip" mode

3) **F**eed **W**ater **I**solation (FWI)

   - P-4 in conjunction with Lo Tavg of 564°F

4) Seals in FWI if caused by a Safety Injection or Hi-Hi Steam Generator water level (P-14).

5) SI reset logic

   - After Safety Injection has been reset, P-4 blocks any future automatic safety injection signals.

P-6 **Source Range Block Permissive**

Set point:

2.0 x 10-5% POWER on any **1 / 2** IR NIS detector.

Function:

1) Allows the operator to manually block SR high flux trip.
   (both TRN A and TRN B switches, QMCB-C)

2) Loss of P-6 (either train no SSPS) will automatically unblock the Source Range Trip Permissive status light on BPLP (QMCB-C) Illuminates when P-6 is present.

P-6 Resets:

When 2/2 IR NIS detector drop < **7.0 X 10-6% POWER**

P-7 **Lo Power Trip Block**

Also known as the "At power trip permissive"

Set points - either of the following

1) ≥ **10%** turbine power **1 / 2** Turbine Impulse Pressure (P-13)

   or

2) ≥ **10%** power on **2 / 4** Power Range NIS (P-10)

Functions:

Unblocks at power trips

1) Pressurizer low pressure
2) Pressurizer hi level
3) RCP undervoltage
4) RCP underfrequency
5) Two loop loss of flow trip

Permissive status light on BPLP goes out when P-7 is present

P-8 **1 Loop Lo Flow Trip Block**

Set points:

2 / 4 Power Range NIS ≥ **48%** power

P-9 **Turbine Trip / Reactor Trip Blocked**

Set points:

2 / 4 Power Range NIS ≥ **50%** power

Function:

Enables reactor trip when the main turbine trips because of the steam dumps and auto rod control capacity is limited to 50%.

Permissive status light on BPLP goes out when P-9 is present

P-10 **Power Range Permissive**

Set point:

2 / 4 PR NIS ≥ 10% power (resets at 8%)

Functions:

stabilizes for about 27.8 seconds

b) Repeated until below set point

Permissive status light illuminates on BPLP when C-3 is active.

C-4 OPΔT Runback and Rod Stop

Set points:

2 / 4 ΔT channels **3%** below OP delta T trip set point for OPΔT.

Function:

This interlock stops all outward rod motion in auto or manual.

Causes Turbine runback

a) Turbine power reduced at rate of 133%/minute for approx. 2.2 seconds, then held steady for about 27.8 seconds

b) Repeated until below set point

Permissive status light illuminates on BPLP when C-4 is active.

C-5 Lo Turbine Impulse Permissive Rod Stop

Set point:

PT-505 Turbine impulse pressure channel indicates ≤ 15% turbine power.

Function:

Auto rod stop (allows outward motion in manual control)

Permissive status light on BPLP when active

C-7 Loss of Turbine Load Interlock

Set point:

≥ 10% turbine power turbine load reduction in within 120 seconds as indicated by PT-506 Turbine impulse pressure.

Function:

Arms steam dump if C-9 is present

If actuated this interlock must be reset at (QMCB-B)

Permissive status light illuminates on BPLP when C-7 is active

C-9 Condenser available

Set point:

1 / 2 Circ water pump breakers closed with no U/V relays actuated on Circ water pump feeder breaker that is closed and **1 / 2** condenser vacuum sensors in **3 of 3** condensers ≥ **24.92"** Hg vacuum

Function:

Allows steam dump operation

Permissive status light on BPLP when C-9 is active

C-11 Bank D full rod withdrawal

Set point:

220 steps on control Bank D

Function:

Rods will not Auto withdrawal. This prevents rods from continuing to step out past the full rods out position.

Annunciator/alarm when C-11 is active

C-16 Stop turbine loading

Set point:

Auctioneered low Tavg below Tref ≥ 20°F, or

Auctioneered low Tavg ≤ 553°F

This interlock can be manually bypassed from turbine control panel for testing only.

Function:

This interlock prevents turbine loading from cooling the RCS excessively.

Annunciator/alarm on main control board when C-16 is active, if it has not been bypassed.

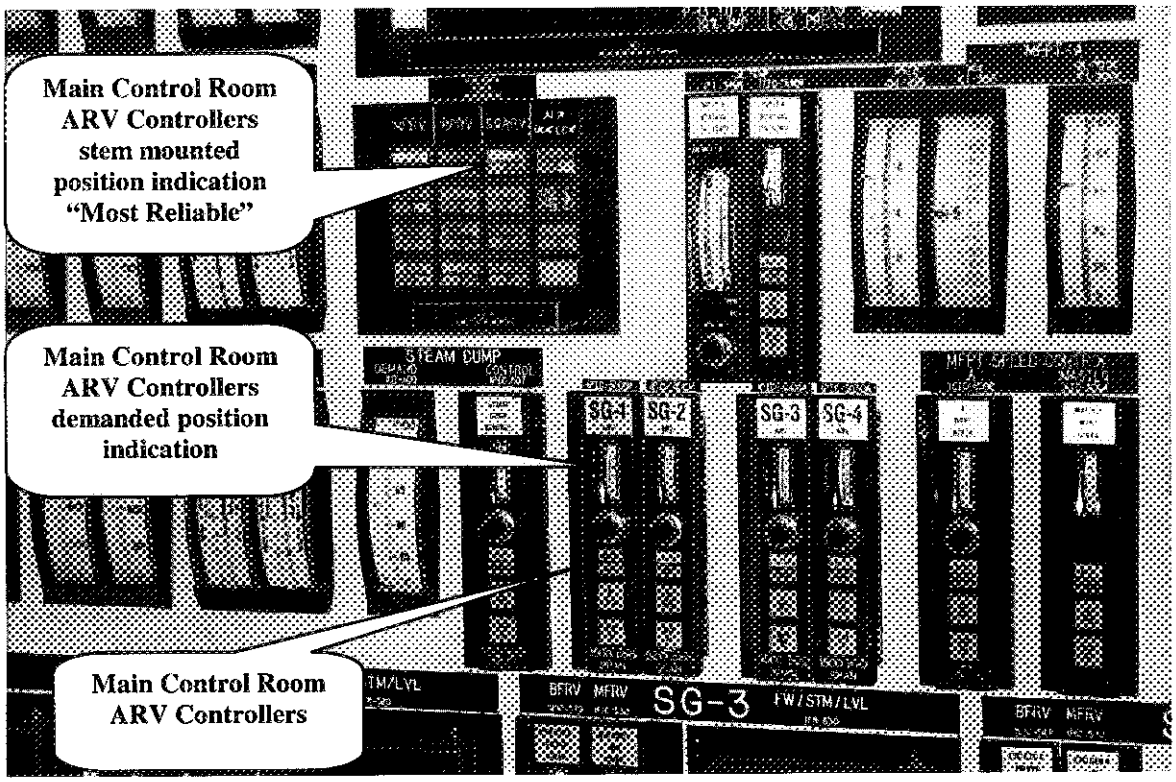

Each Atmospheric Relief Valve has its own Hagan Controller located on the "B" panel in the Main Control Room. The Controller is normally set using a 0 to 10 turn potentiometer with a scale range of 0 to 1500 psig. During normal plant operations the pot is set at 7.47 (UOP guidance) which corresponds to 1125 psig and will control Reactor Coolant temperature at 560°F.

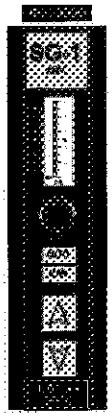

In "Automatic operation" ARV controller compares steam line pressure from a corresponding dedicated pressure transmitter to the potentiometer set-point entered by the operator. If the Main Steam line pressure exceeds the set-point the ARV will throttle open to reduce pressure. In "Manual operation" the operator depresses the "UP" arrow to open the ARV for more steam flow, and the "DOWN" arrow to close the ARV to lower steam flow. The ARV is placed in the automatic control position by depressing the "AUTO/MAN" pushbutton and is placed in manual control either by depressing the "UP" or "DOWN" arrow pushbuttons. One common error the instructors see with Hagan controllers (ARV as an example) is that the students will use the demanded position as the actual component position, which may not be the case. Good operating practice is to always use redundant indications for any operation you perform, checking for the desired results.

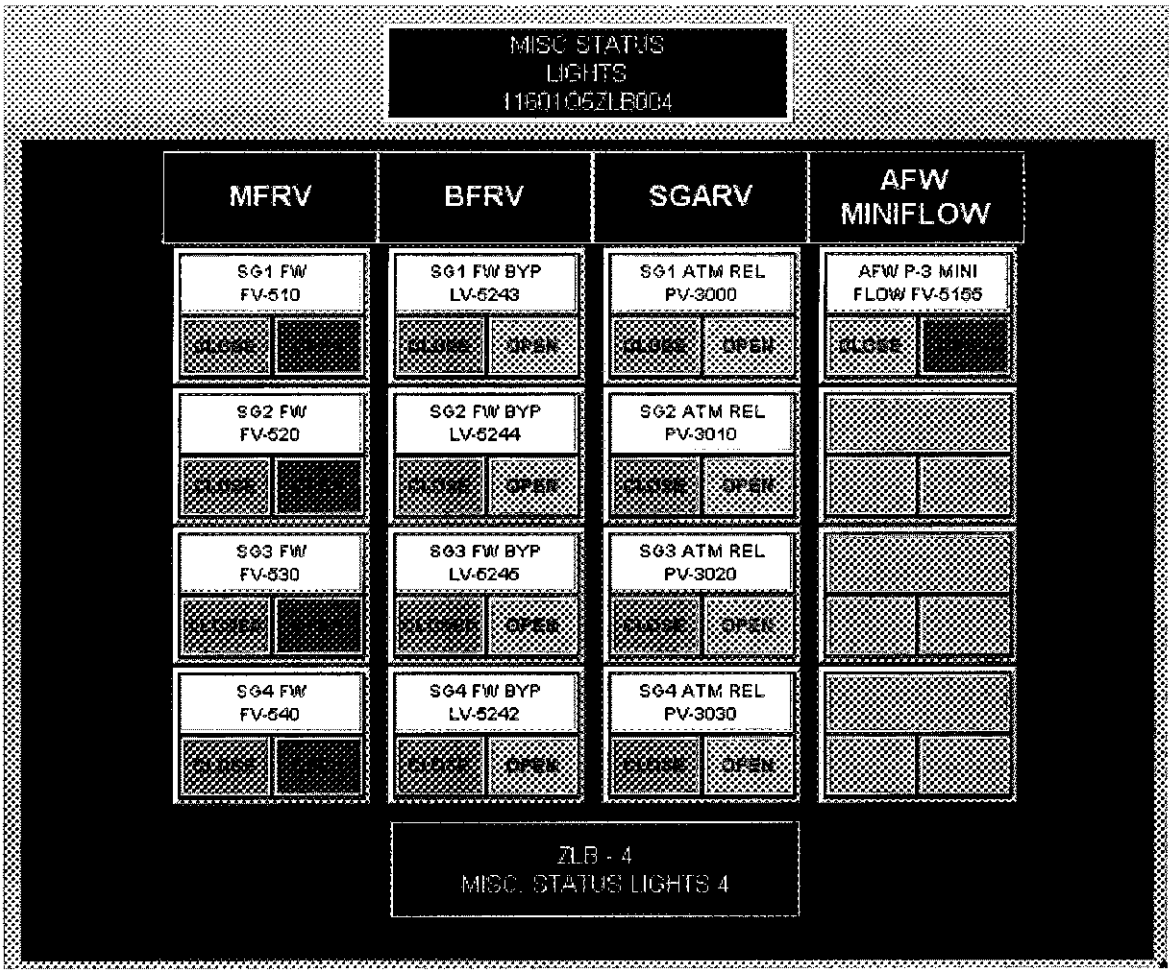

Main Control Room Panel "B" position indication for each of the ARV's. This position comes off stem mounted limit switches and will indicate to the operator the ARV is either:

- **Green** - CLOSED
- **RED** - OPEN
- **BOTH LITE** - THROTTLED AT SOME POSITION

Remember this provides the operator with the most reliable indication of ARV position, but as always should be backed up by monitoring the desired plant response (i.e. the ARV is open and Primary temperature is responding as expected).

Summary of 100% Reactor Power Plant Conditions:

Under 100% power normal operating conditions you would expect to see the following equipment status:

- All Train "A" & "B" Main Steam Isolation Valves **OPEN** (8 total valves)
- All Train "A" & "B" Main Steam Isolation Bypass Valves **OPEN** (8 total valves)
- All Main Steam Isolation Bypass Control Valves **OPEN** (4 total valves)
- Atmospheric Relief Valves **CLOSED** in automatic control

The 100% power normal operating conditions you would expect to see the following process conditions:

Parameter	**Value / Position**
SG NR level	65%
SG steam flow rate	4×10^6 lbm/hr
SG Steam pressure	960 psig
Atmospheric Relief Valve Pot Setpoint	7.47 lift at 1120.5 psig
Main Steam Code Safety Valves Lift Setpoints	1185 psig 1200 psig 1210 psig 1220 psig 1235 psig
Main Steam System supplying Steam to the following loads	1. High Pressure Turbine 2. Moisture Separator Reheaters (4 total) 3. Steam Jet Air Ejector (1)

The following automatic control systems associated with the Main Steam System would normally be in service at 100% power:

- Steam Generator water level control
- Main Feed Water Pump Control

4. 029EK2.06 001

-Initial Reactor Power was 47%.
-An Anticipated Transient Without Scram, (ATWS), occurs.
-Tavg-Tref deviation = 25°F.
-Main Steamline pressures are at 1150 psig.
-At step 4 of EOP 13.0, (with reactor trip breakers still closed), the BOP operator reports that Bank 1 and 2 of steam dumps **AND** all steamline PORVs are open.

Which ONE of the following correctly describes the response of the steam dump system with the current plant conditions?

A. The steam dump system is **NOT** operating properly. The atmospheric steam dump valves should also be open due to the C-7B circuit being energized along with the Tavg-Tref deviation of 25°F.

B. The steam dump system **IS** working properly. Banks 1 and 2 steam dump valves are open due to the C-7A circuit being energized along with the Tavg-Tref deviation of 25°F while the PORVs are responding to high steamline pressure.

C. The steam dump system is **NOT** operating properly. Only Bank 1 and 2 steam dump valves should be open due to the C-7A circuit being energized along with the Tavg-Tref deviation of 25°F.

D. The steam dump system **IS** working properly. Banks 1 and 2 steam dump valves and the steamline PORVs are open due to the C-7A circuit being energized along with the Tavg-Tref deviation of 25°F.

Bank question 3136.

A. Incorrect, Requires the operator to analyze that the C-7B circuit is not energized due to less than a 50% load rejection occurring because the plant was initially at 45% power.

B. Correct, The steam dump valves are open due to C-7A circuitry since the reactor trip breakers are still closed and the load rejection controller is in control, while the PORVs are responding to high steamline pressure of greater than 1133 psig.

C. Incorrect, requires the operator to analyze that the PORVs are open due to high steam line pressure.

D. Incorrect, Requires the operator to analyze that the PORVs do not receive an open signal from the C-7A circuitry. Signals are only received from steamline pressure greater than 1133 psig or from the M/A station when in PORV mode or from the C-7B circuitry.

QUESTIONS REPORT

for Westinghouse 3 Loop Questions

RO Tier:	1	SRO Tier:	1
K/A Value:	BRKRS RELAYS DISC	Cog. Level:	C/A 2.9/3.1
Source:	BANK	Exam:	SM04301
Test:	R	Misc:	GWL

15. 012K2.01 001

Which ONE of the following correctly describes the power supply associated with the Unit 1 NSSS Protection Cabinet 2?

A. Its normal power supply is 1NY2N and its alternate power supply is 1NYRS.

B. Its normal power supply is 1NYRS and its alternate power supply is 1NY2N.

C. Its normal power supply is 1BY1B, which supplies two 26v DC power supplies, that typically operate in a load sharing configuration for reliability purposes.

D. Its normal power supply is 1BY1B, which supplies two 26v DC power supplies, each of which must be operating in order to supply 100% of the electrical demand from the cabinet.

K/A
012 Reactor Protection
K2.01 Knowledge of bus power supplies to the following: RPS channels, components, and interconnections.

K/A MATCH ANALYSIS
Question tests knowledge of power to the RPS. This question was designated as New because I had no prior knowledge of the question existing, but there is a high likelihood that a similar question does actually exist. This question could be designated as bank or modified without impacting the minimum number of new and modified question requirement.

ANSWER / DISTRACTOR ANALYSIS
A. Incorrect. See referenced lesson plan Pages 6 and 7. Plausible because this is correct for the NSSS Control Cabinet 2.
B. Incorrect. See referenced lesson plan Pages 6 and 7. Plausible because the choices from the above distractor are reversed for the normal and alternate power supplies to the NSSS Control Cabinet 2.
C. Correct. See referenced lesson plan Pages 6 and 7.
D. Incorrect. See referenced lesson plan Pages 6 and 7. The reasoning is incorrect in that each 26v DC power supply is capable of carrying 100% of the demanded load. Plausible because most of the time both are in service in a load sharing configuration.

REFERENCES
1. LO-LP-60324-05-C, Loss of 120V AC Instrument Power, Rev. 8, 03/25/2002.

MCS Time: 1 Points: 1.00 Version: 0 1 2 3 4 5 6 7 8 9
Answer: C B C A C A D C D B Scramble Range: A - D

QUESTIONS REPORT
for Voglte 2005-301 Draft

Tier:	2	Group:	1
Key Word:	RTB REACTOR TRIP BRE	Cog Level:	MEM 3.3
Source:	N	Exam:	VG05301
Test:	R	Author/Reviewer:	MAB/RSB

15. 012K2.01 001

Which ONE of the following correctly describes the power supply associated with the Unit 1 NSSS Protection Cabinet 2?

A. Its normal power supply is 1NY2N and its alternate power supply is 1NYRS.

B. Its normal power supply is 1NYRS and its alternate power supply is 1NY2N.

C. Its normal power supply is 1BY1B, which supplies two 26v DC power supplies, that typically operate in a load sharing configuration for reliability purposes.

D. Its normal power supply is 1BY1B, which supplies two 26v DC power supplies, each of which must be operating in order to supply 100% of the electrical demand from the cabinet.

K/A
012 Reactor Protection
K2.01 Knowledge of bus power supplies to the following: RPS channels, components, and interconnections.

K/A MATCH ANALYSIS
Question tests knowledge of power to the RPS. This question was designated as New because I had no prior knowledge of the question existing, but there is a high likelihood that a similar question does actually exist. This question could be designated as bank or modified without impacting the minimum number of new and modified question requirement.

ANSWER / DISTRACTOR ANALYSIS
A. Incorrect. See referenced lesson plan Pages 6 and 7. Plausible because this is correct for the NSSS Control Cabinet 2.
B. Incorrect. See referenced lesson plan Pages 6 and 7. Plausible because the choices from the above distractor are reversed for the normal and alternate power supplies to the NSSS Control Cabinet 2.
C. Correct. See referenced lesson plan Pages 6 and 7.
D. Incorrect. See referenced lesson plan Pages 6 and 7. The reasoning is incorrect in that each 26v DC power supply is capable of carrying 100% of the demanded load. Plausible because most of the time both are in service in a load sharing configuration.

REFERENCES
1. LO-LP-60324-05-C, Loss of 120V AC Instrument Power, Rev. 8, 03/25/2002.

MCS Time: 1 Points: 1.00 Version: 0 1 2 3 4 5 6 7 8 9
Answer: C B C A C A D C D B Scramble Range: A - D

QUESTIONS REPORT
for Voglte 2005-301 Draft

Tier:	2	Group:	1
Key Word:	RTB REACTOR TRIP BRE	Cog Level:	MEM 3.3
Source:	N	Exam:	VG05301
Test:	R	Author/Reviewer:	MAB/RSB

6. 012K2.01 001

Which ONE of the following correctly describes the power supply associated with the Unit 1 NSSS Protection Cabinet 2?

A. Its normal power supply is 1NY2N and its alternate power supply is 1NYRS.

B. Its normal power supply is 1NYRS and its alternate power supply is 1NY2N.

C. Its normal power supply is 1BY1B, which supplies two 26v DC power supplies, that typically operate in a load sharing configuration for reliability purposes.

D. Its normal power supply is 1BY1B, which supplies two 26v DC power supplies, each of which must be operating in order to supply 100% of the electrical demand from the cabinet.

K/A
012 Reactor Protection
K2.01 Knowledge of bus power supplies to the following: RPS channels, components, and interconnections.

K/A MATCH ANALYSIS
Question tests knowledge of power to the RPS. This question was designated as New because I had no prior knowledge of the question existing, but there is a high likelihood that a similar question does actually exist. This question could be designated as bank or modified without impacting the minimum number of new and modified question requirement.

ANSWER / DISTRACTOR ANALYSIS
A. Incorrect. See referenced lesson plan Pages 6 and 7. Plausible because this is correct for the NSSS Control Cabinet 2.
B. Incorrect. See referenced lesson plan Pages 6 and 7. Plausible because the choices from the above distractor are reversed for the normal and alternate power supplies to the NSSS Control Cabinet 2.
C. Correct. See referenced lesson plan Pages 6 and 7.
D. Incorrect. See referenced lesson plan Pages 6 and 7. The reasoning is incorrect in that each 26v DC power supply is capable of carrying 100% of the demanded load. Plausible because most of the time both are in service in a load sharing configuration.

REFERENCES
1. LO-LP-60324-05-C, Loss of 120V AC Instrument Power, Rev. 8, 03/25/2002.

MCS Time: 1 Points: 1.00 Version: 0 1 2 3 4 5 6 7 8 9
Answer: C B C A C A D C D B Scramble Range: A - D

QUESTIONS REPORT
for Voglte 2005-301 Draft

Tier:	2	Group:	1
Key Word:	RTB REACTOR TRIP BRE	Cog Level:	MEM 3.3
Source:	N	Exam:	VG05301
Test:	R	Author/Reviewer:	MAB/RSB

SECTION A

REACTOR PROTECTION SYSTEM

28.3 DESCRIPTION AND LAYOUT

The system for reactor protection is called the 7300 process system. The 7300 process system receives inputs from plant instrumentation such as flow, temperature, and pressure. These inputs are used to provide trip and safeguards actuation signals, automatic controls for certain parameters, MCB meter and alarm indication, and input to the plant computer. The 7300 process system is made up by four different sets of cabinets; (1) NSSS Protection Cabinets, (2) NSSS Control Cabinets, (3) BOP Protection Cabinets, and (4) BOP Control Cabinets.

28.4 NSSS PROTECTION CABINETS

The NSSS Protection Cabinets located in the main control room provide the interface between the safety related instrumentation and SSPS and/or NSSS control cabinets. The signals that are received by the NSSS protection cabinets are sent to; SSPS for Reactor trip and ESFAS actuation functions, to the NSSS control cabinets for parameter control, main control board meters and alarms for indication, and the integrated plant computer for trend and critical status monitoring.

The interface between NSSS control cabinets, control board meters, alarms and plant computers are isolated. This isolation device prevents any electrical faults from interfering with the reactor protection system.

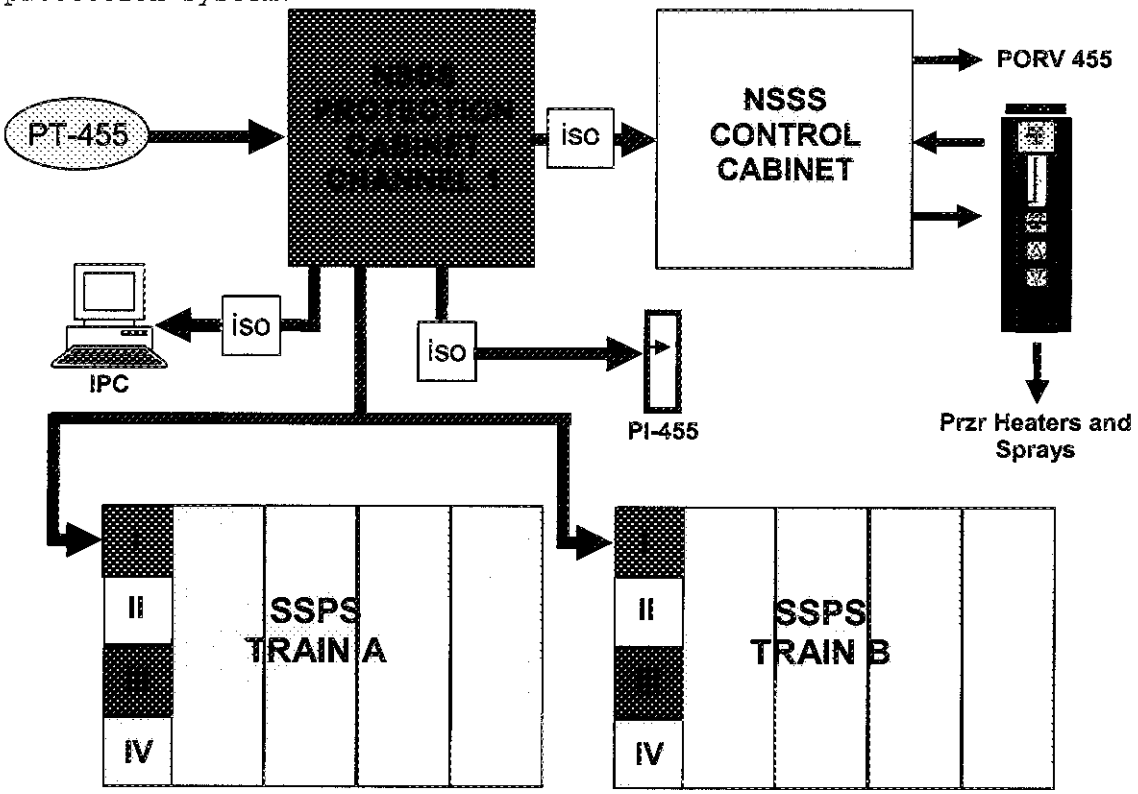

There are a total of 4 NSSS protection cabinets also known as channels. Each cabinet is powered from its associated train 120 volt Vital AC bus.

Cabinet	Power Supply
NSSS Protection Cabinet 1	1/2AY1A
NSSS Protection Cabinet 2	1/2BY1B
NSSS Protection Cabinet 3	1/2CY1A
NSSS Protection Cabinet 4	1/2DY1B

There are two 26 VDC power supplies located in each cabinet, each are capable of supplying adequate power but normally provide load sharing operation for reliability. Both 26 VDC power supplies are powered from its associated 120 VAC power source listed above.

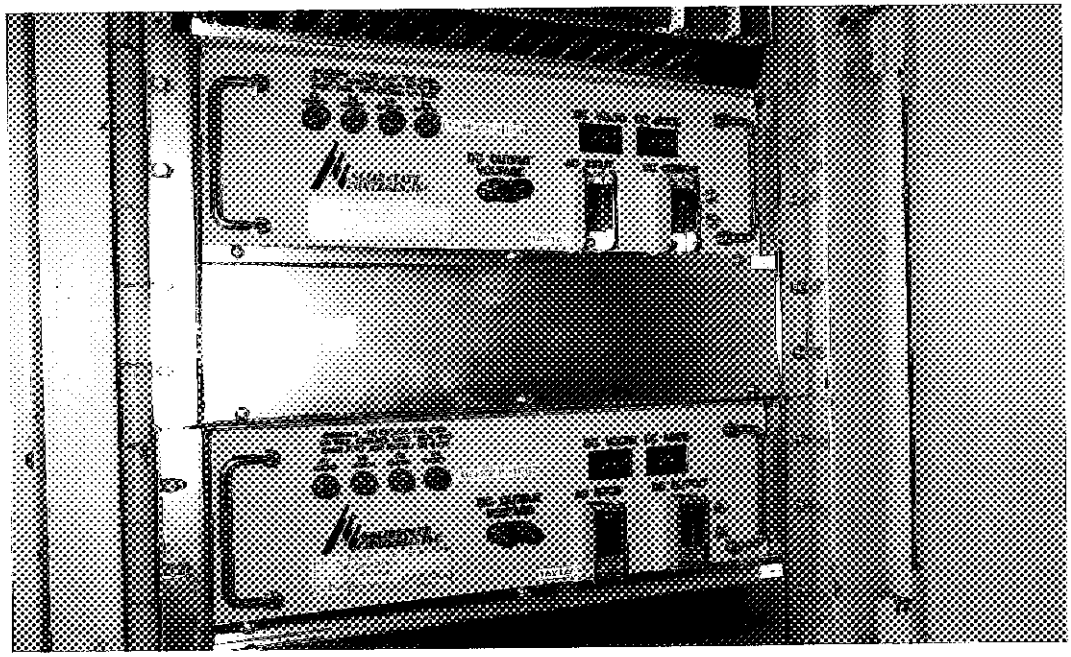

26 VDC Power Supplies

28.5 NSSS CONTROL CABINETS

The NSSS 7300 control cabinets that are located in the main control room receive signals from both non-safety related field inputs and isolated output from NSSS 7300 protection cabinets. These cabinets provide control functions for the primary systems such as Pressurizer level, Pressurizer pressure, and rod control. It also provides control functions for other systems, such as Steam Generator Water Level Control, Steam Dumps, BTRS, and VCT makeup control.

The NSSS control cabinet power supplies, unlike the protection cabinets, are powered by non safety-related essential 120 VAC. Each cabinet is powered by two different power sources; from an inverter (with battery backup) and from a regulated transformer. Listed below are the normal and alternate power supplies which should maintain uninterruptible power to the control cabinets should a loss of either the normal or alternate power source occur.

Cabinet	Normal	Alternate
NSSS Control Cabinet 1	1/2NY4N	1/2NYS
NSSS Control Cabinet 2	1/2NY2N	1/2NYRS
NSSS Control Cabinet 3	1/2NY1N	1/2NYRS
NSSS Control Cabinet 4	1/2NY2N	1/2NYR

BOP PROTECTION CABINETS

The BOP protection cabinets are located in the main control room, and are similar to the NSSS protection cabinets in that they are powered by safety-related vital 120 VAC. The difference between the two is how these cabinets are utilized. The BOP Protection cabinets receive field inputs from systems such as NSCW, CCW, ACCW, and SGBD. There is only one interface between the BOP protection cabinets and SSPS. It is the Main Turbine Low ETS pressure input which signals if the Main Turbine is tripped or not. We will review this again later on in the text. The BOP Protection cabinets are mostly used for things such as protective isolation of CVCS and SGBD pipe break protection, RCP thermal barrier return auto isolation, protective interlocks for NSCW, CCW, and ACCW, and (just like the NSSS protective cabinets) sending signals to control board meters, alarms, and the plant computer. Shown below is a drawing that illustrates one of the functions the BOP protection system. Another way that BOP protection differs from NSSS protection is that it performs some control functions. System controls for auxiliary feed water flow, essential chilled water flow, and Steam Generator atmospheric relief valve control are performed through BOP protection cabinets. These functions are safety-related, therefore they must be power from safety related buses. NSSS control cabinets are not powered from safety-related buses. Listed below are the power supplies for each cabinet.

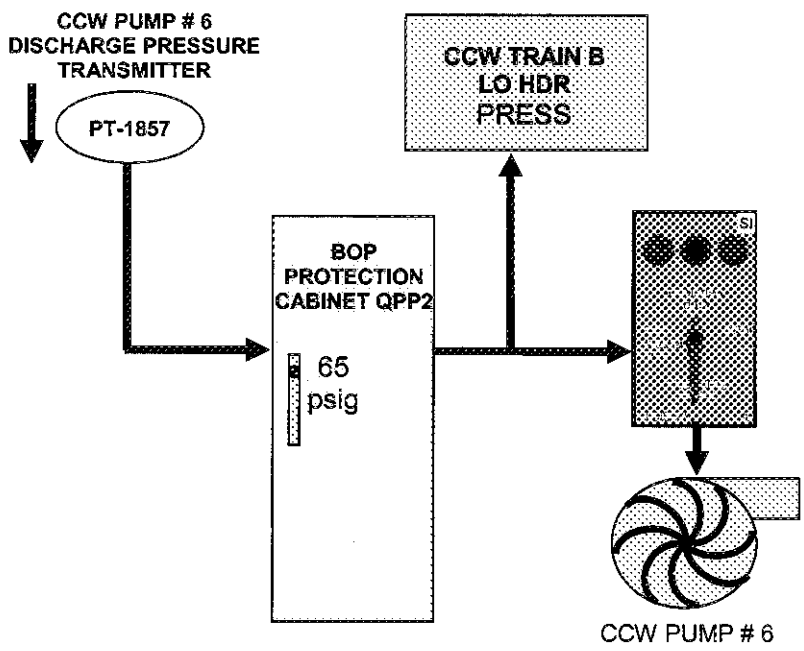

1. 012K2.01 001

Given the following Unit 2 conditions:

- Unit is at 74% Rated Thermal Power.
- All control and protection systems are in their normal alignment.
- A fault on inverter 2AD1I1 resulted in a loss of power to vital instrument bus 2AY1A.
- A steam leak on SG #3 resulted in a low steam line pressure safety injection signal.

Which ONE of the following correctly describes the effect on the reactor trip breakers (RTA and RTB) and the engineered safety features actuation (ESFAS)?

A. RTA stays closed and RTB opens. Only Train 'B' ESFAS equipment automatically aligns.

B. RTA and RTB open. Only Train 'B' ESFAS equipment automatically aligns.

C. RTA stays closed and RTB opens. Both Trains 'A' and 'B' ESFAS equipment automatically aligns.

D. RTA and RTB open. Both Trains 'A' and 'B' ESFAS equipment automatically aligns.

K/A
012 Reactor Protection
K2.01 Knowledge of bus power supplies to the following: RPS channels, components, and interconnections.

K/A MATCH ANALYSIS
Question tests knowledge of the effect of losing power to the RPS.

ANSWER / DISTRACTOR ANALYSIS
A. Incorrect. RPS is fail safe and both RTBs open. Plausible because only Train "B" equipment auto aligns.
B. Correct. The RPS receives a trip signal due to the SI. Both RTA and B will open but only "B" Train of ESFAS will actuate because it is energize to actuate.
C. Incorrect. RTA opens and only Train "B" ESFAS actuates. Plausible because applicant may assume that both RPS and ESFAS are fail safe which would yield a Rx Trip and a full ESFAS actuation.
D. Incorrect. Plausible because only Train "B" equipment auto aligns.

REFERENCES
1. LO-LP-60324-05-C, Loss of 120V AC Instrument Power, Rev. 8, 03/25/2002.
2. Vogtle Exam Bank LO-LP-28101-01-05.

MCS Time: 1 Points: 1.00 Version: 0 1 2 3 4 5 6 7 8 9
Answer: B B B A D D A C A C Scramble Range: A - D

QUESTIONS REPORT
for Voglte 2005-301 Draft

Tier:	2	Group:	1
Key Word:	RTB REACTOR TRIP BRE	Cog Level:	C/A 3.3
Source:	B	Exam:	VG05301
Test:	R	Author/Reviewer:	MAB/RSB

III. LESSON OUTLINE: NOTES

12. Loss of Regulated Instrument Panel 1NYJ

13. Loss of Regulated Instrument Panel 1NYR

14. Loss of Regulated Instrument Panel 1NYS

15. Loss of Regulated Instrument Panel 1NYRS

16. Loss of Regulated Instrument Panel 1NY01

D. Present Lesson Objectives

LO-TP-60324-001

II. PRESENTATION

A. Loss of Vital Instrument Panel 1AY1A

1. Symptoms

a. All Channel I trip status lights energized.

1) Probably the most significant and easiest method of determining the loss of 1AY1A.

b. Loss of N31, N35, N41 simultaneously.

c. 1AY1A Trouble Alarm

d. Inverter 1AD1I1 Trouble Alarm

2. Concerns and major effects of loss of 1AY1A **Objective 1**

a. SG 1 and 4 ARV will not operate from the control room or remote shutdown panel.

b. May lose letdown and have max charging if LT-459 is selected for control.

c. Tref (PT-505) will fail causing AUTO Rods to step in at 72 steps/min

d. Steam Generator levels and steam flows fail causing significant transient on all the steam generators.

e. If unable to stabilize plant conditions may require plant shutdown or trip. **Objective 3**

f. Plant will trip if below P-10 due to N35 trip signal when de-energized.

g. General Warning on Train A SSPS. **Objective 4**

Without power from 1AY1A there is no power to Train A SSPS slave relays.

Any actuation signal requiring operation of slave relays will be blocked.

If SI signal present, only Train B equipment will Auto align.

Train A equipment must be manually re-aligned in this case.

h. Plant will trip if another channel instrument bistable is tripped and/or channel is in test.

3. Actions **Objective 2**

a. Verify reactor power > P-10 otherwise verify Reactor trio and go to 19000-C.

b. Rods in MANUAL

1) Prevents rod motion due to loss of PT-505 (Tref)

2) Rods would step in to match Tref of 557°F

c. Control SG levels between 60 - 70%

1) Some or all of the controlling channels of steam flow, feed flow and SG levels will fail to zero.

2) Placing all FRV's in Manual may increase the difficulty of controlling the levels

3) Utilize the trend charts for each SG.

The selected control channels for each parameter is displayed on the chart.

If SG level, steam flow and feed flow are all above), then that FRV should be left in AUTO.

4) Place Main Feed Pump Speed controller in MANUAL since some or all selected steam flows have failed

d. Position Feed Control selector switches to unaffected channels as listed in the procedure.

1) If FRV not in MANUAL and you select a different channel it will induce a

LO-LP-28101-01-05
Given the following conditions on Unit 2:

* 74% Reactor Power.

* All control and protection systems are in normal alignment.

* A fault on inverter 2AD1I1 resulted in a loss of power to vital instrument bus 2AY1A.

* A steam leak on SG #3 results in a SI signal due to "Low Steam Line Pressure".

Which ONE of the following is true?

A. RTA stays closed, RTB open, only Train "B" ESFAS actuates.

✓B. RTA and RTB open, only Train "B" ESFAS actuates.

C. RTA stays closed, RTB open, both Train "A" and "B" ESFAS actuate.

D. RTA and RTB open, both Train "A" and "B" ESFAS actuate.

LO-LP-28101-01
State the sources (s) of power to the SSPS cabinets.

16. 013A1.04 001

The Unit 1 operating crew is performing 19231-C, FR-H.1 Response to Loss of Secondary Heat Sink, due to a loss of all feedwater.

The following conditions exist:

- All Hot leg RTDs are indicating 560 °F.
- All steam generator (SG) levels are indicating 7% WR.
- Maintenance is working on restoring auxiliary feedwater (AFW) capability and are estimating that it will be available in 15 minutes.

Which ONE of the following correctly states the mitigation strategy that is directed by 19231-C?

A. Immediately establish feed and bleed to lower RCS temperature, then attempt to establish AFW at 30 to 100 gpm to one SG until a WR SG level of greater than 9% is reached.

B. Immediately establish feed and bleed to lower RCS temperature, then attempt to establish AFW at 30 to 100 gpm to all SGs until WR SG levels of greater than 9% are reached.

C. Continue monitoring SG levels until they reach 0% WR, then establish feed and bleed to lower RCS temperature and attempt to establish AFW at 30 to 100 gpm to one SG until a WR SG level of greater than 9% is reached.

D. Continue monitoring SG levels until they reach 0% WR, then establish feed and bleed to lower RCS temperature and attempt to establish AFW at 30 to 100 gpm to all SGs until WR SG levels of greater than 9% are reached.

K/A
013 Engineered Safety Feature Actuation
A1.04 Ability to predict and / or monitor changes in parameters (to prevent exceeding design limits) associated with operating the ESFAS controls including: S/G level.

K/A MATCH ANALYSIS
The question tests knowledge of operation of AFW controls during a loss of heat sink event given that SG levels are below a certain level. Without establishing cooling to the core, the fuel will exceed design limits and overheat.

ANSWER / DISTRACTOR ANALYSIS
A. Correct. With NR Levels as low as they are, feed and bleed is required immediately (19231-C, Step 3) and one SG is to be fed at 30-100 gpm until its NR level is above 10% (19231-C, Note prior to Step 23).
B. Incorrect. Feeding all SGs is not correct. Plausible because feeding all SGs would more quickly establish a heat sink.
C. Incorrect. Feed and bleed is required immediately. Plausible because the applicant may think that there is still inventory in the SG due to 7% level.
D. Incorrect. Feed and bleed is required immediately. Plausible because the applicant may think that there is still inventory in the SG due to 7% level.

REFERENCES
1. 19231-C, FR-H.1, Response to Loss of Secondary Heat Sink, Rev. 26.5, 04/14/2003.
2. 19200-C, F-0 Critical Safety Function Status Trees, Rev. 19, 02/25/2004.

MCS	Time: 1	Points: 1.00	Version:	0 1 2 3 4 5 6 7 8 9			
			Answer:	A C D B D D A C C A		Scramble Range: A - D	
Tier:	2			Group:	1		
Key Word:	FEED AND BLEED			Cog Level:	C/A 3.4		
Source:	N			Exam:	VG05301		
Test:	R			Author/Reviewer:	MAB/RSB		

16. 013A1.04 001

The Unit 1 operating crew is performing 19231-C, FR-H.1 Response to Loss of Secondary Heat Sink, due to a loss of all feedwater.

The following conditions exist:

- All Hot leg RTDs are indicating 560 °F.
- All steam generator (SG) levels are indicating 7% WR.
- Maintenance is working on restoring auxiliary feedwater (AFW) capability and are estimating that it will be available in 15 minutes.

Which ONE of the following correctly states the mitigation strategy that is directed by 19231-C?

A. Immediately establish feed and bleed to lower RCS temperature, then attempt to establish AFW at 30 to 100 gpm to one SG until a WR SG level of greater than 9% is reached.

B. Immediately establish feed and bleed to lower RCS temperature, then attempt to establish AFW at 30 to 100 gpm to all SGs until WR SG levels of greater than 9% are reached.

C. Continue monitoring SG levels until they reach 0% WR, then establish feed and bleed to lower RCS temperature and attempt to establish AFW at 30 to 100 gpm to one SG until a WR SG level of greater than 9% is reached.

D. Continue monitoring SG levels until they reach 0% WR, then establish feed and bleed to lower RCS temperature and attempt to establish AFW at 30 to 100 gpm to all SG until WR SG levels of greater than 9% are reached.

S

Ensure noun/verb agreement is ok.

K/A
013 Engineered Safety Feature Actuation
A1.04 Ability to predict and / or monitor changes in parameters (to prevent exceeding design limits) associated with operating the ESFAS controls including: S/G level.

K/A MATCH ANALYSIS
The question tests knowledge of operation of AFW controls during a loss of heat sink event given that SG levels are below a certain level. Without establishing cooling to the core, the fuel will exceed design limits and overheat.

ANSWER / DISTRACTOR ANALYSIS
A. Correct. With NR Levels as low as they are, feed and bleed is required immediately (19231-C, Step 3) and one SG is to be fed at 30-100 gpm until its NR level is above 10% (19231-C, Note prior to Step 23).
B. Incorrect. Feeding all SGs is not correct. Plausible because feeding all SGs would more quickly establish a heat sink.
C. Incorrect. Feed and bleed is required immediately. Plausible because the applicant may think that there is still inventory in the SG due to 7% level.
D. Incorrect. Feed and bleed is required immediately. Plausible because the applicant may think that there is still inventory in the SG due to 7% level.

REFERENCES
1. 19231-C, FR-H.1, Response to Loss of Secondary Heat Sink, Rev. 26.5, 04/14/2003.
2. 19200-C, F-0 Critical Safety Function Status Trees, Rev. 19, 02/25/2004.

MCS	Time: 1	Points: 1.00	Version:	0 1 2 3 4 5 6 7 8 9			
			Answer:	A C D B D D A C C A		Scramble Range: A - D	
Tier:	2			Group:	1		
Key Word:	FEED AND BLEED			Cog Level:	C/A 3.4		
Source:	N			Exam:	VG05301		
Test:	R			Author/Reviewer:	MAB/RSB		

QUESTIONS REPORT
for Vogtle 2005-301 Draft

1. 013A1.04 001

The Unit 1 operating crew is performing 19231-C, FR-H.1 Response to Loss of Secondary Heat Sink, due to a loss of all feedwater.

The following conditions exist:

- All Hot leg RTDs are indicating 560 °F.
- All steam generator (SG) levels are indicating 7% WR.
- Maintenance is working on restoring auxiliary feedwater (AFW) capability and are estimating that it will be available in 15 minutes.

Which ONE of the following correctly states the mitigation strategy that is directed by ~~FR-H.1~~? 19231-C ?

A. Immediately establish feed and bleed to lower RCS temperature, then attempt to establish AFW at 30 to 100 gpm to one SG until a NR SG level of ~~10~~% is reached.
WR > 9%

B. Immediately establish feed and bleed to lower RCS temperature, then attempt to establish AFW at 30 to 100 gpm to all SGs until NR SG levels of ~~10~~% are reached.
WR > 9%

C. Continue monitoring SG levels until they reach 0% WR, then establish feed and bleed to lower RCS temperature and attempt to establish AFW at 30 to 100 gpm to one SG until a NR SG level of 10% is reached.

D. Continue monitoring SG levels until they reach 0% WR, then establish feed and bleed to lower RCS temperature and attempt to establish AFW at 30 to 100 gpm to all SG until NR SG levels of 10% are reached.

K/A
013 Engineered Safety Feature Actuation
A1.04 Ability to predict and / or monitor changes in parameters (to prevent exceeding design limits) associated with operating the ESFAS controls including: S/G level.

K/A MATCH ANALYSIS
The question tests knowledge of operation of AFW controls during a loss of heat sink event given that SG levels are below a certain level. Without establishing cooling to the core, the fuel will exceed design limits and overheat.

ANSWER / DISTRACTOR ANALYSIS
A. Correct. With NR Levels as low as they are, feed and bleed is required immediately (19231-C, Step 3) and one SG is to be fed at 30-100 gpm until its NR level is above 10% (19231-C, Note prior to Step 23).
B. Incorrect. Feeding all SGs is not correct. Plausible because feeding all SGs would more quickly establish a heat sink.
C. Incorrect. Feed and bleed is required immediately. Plausible because the applicant may think that there is still inventory in the SG due to 7% level.
D. Incorrect. Feed and bleed is required immediately. Plausible because the applicant may think that there is still inventory in the SG due to 7% level.

REFERENCES
1. 19231-C, FR-H.1, Response to Loss of Secondary Heat Sink, Rev. 26.5, 04/14/2003.
2. 19200-C, F-0 Critical Safety Function Status Trees, Rev. 19, 02/25/2004.

MCS	Time: 1	Points: 1.00	Version:	0 1 2 3 4 5 6 7 8 9			
			Answer:	A C D B D D A C C A		Scramble Range: A - D	
Tier:	2			Group:	1		
Key Word:	FEED AND BLEED			Cog Level:	C/A 3.4		
Source:	N			Exam:	VG05301		
Test:	R			Author/Reviewer:	MAB/RSB		

Sheet 1 of 1

F-0.3
HEAT SINK

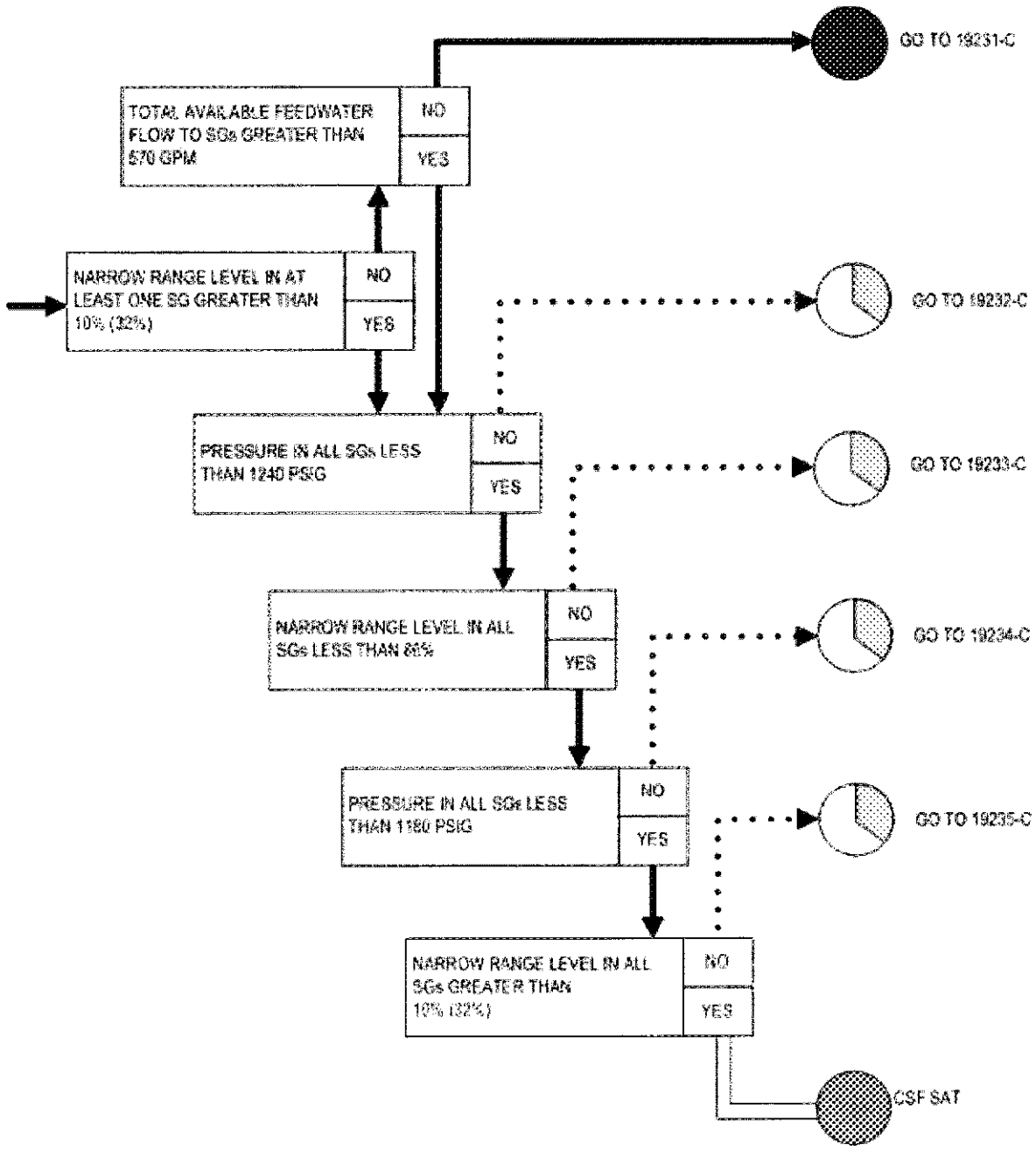

EMERGENCY OPERATING PROCEDURE

FR-H.1 RESPONSE TO LOSS OF SECONDARY HEAT SINK

PRB REVIEW REQUIRED

PURPOSE

This procedure provides actions to respond to a loss of secondary heat sink in all steam generators. (Applicable in Modes 1, 2, 3, and 4.)

MAJOR ACTIONS

- Attempt Restoration of Feed Flow To Steam Generators
- Initiation of RCS Bleed and Feed Heat Removal
- Restore and Verify Secondary Heat Sink
- Termination of RCS Bleed and Feed Heat Removal

ENTRY CONDITIONS

- 19000-C, E-0 REACTOR TRIP OR SAFETY INJECTION, Step 18.
- 19200-C, F-0.3 HEAT SINK CSFST on a RED condition.

ACTION/EXPECTED RESPONSE	RESPONSE NOT OBTAINED

CAUTION:

- If total feed flow is less than 570 gpm due to operator action, and if total feed flow capability of 570 gpm is available, this FRP should not be performed.
- Feed flow should not be re-established to any faulted SG if a non-faulted SG is available.

NOTE: 91001-C EMERGENCY CLASSIFICATION AND IMPLEMENTING INSTRUCTIONS should be implemented at this time.

1. Check if secondary heat sink is required:	
a. RCS pressure - GREATER THAN ANY NON-FAULTED SG PRESSURE.	a. Return to procedure and step in effect.
b. RCS WR temperature - GREATER THAN 350°F.	b. Try to place the RHR system in service by initiating 13011, RESIDUAL HEAT REMOVAL SYSTEM. IF adequate cooling with the RHR system is established, THEN return to procedure and step in effect.
2. Check CCP status - AT LEAST ONE AVAILABLE.	2. Stop all RCPs. Go to Step 12. OBSERVE CAUTION PRIOR TO STEP 12.

ACTION/EXPECTED RESPONSE	RESPONSE NOT OBTAINED
* 3. Check if RCS bleed and feed is required:	
a. Check the following: • WR level in any 3 SGs-LESS THAN 29% [44% ADVERSE]. -OR- • RCS pressure due to loss of secondary heat sink - GREATER THAN 2335 PSIG.	a. WHEN either of the following exists: • WR level in any 3 SGs less than 29% [44% ADVERSE], -OR- • RCS pressure due to loss of secondary heat sink - GREATER THAN 2335 PSIG. THEN trip all RCPs and go to Step 12 and perform bleed and feed actions. GO TO Step 4.
b. Trip all RCPs.	
c. Go to Step 12 and perform bleed and feed actions. OBSERVE CAUTION PRIOR TO STEP 12.	
4. Place Containment Hydrogen Monitors in service by initiating 13130, POST ACCIDENT HYDROGEN CONTROL.	

ACTION/EXPECTED RESPONSE	RESPONSE NOT OBTAINED
11. Check for loss of secondary heat sink: • WR level in any 3 SGs is less than 29% [44% ADVERSE]. -OR- • RCS pressure due to loss of secondary heat sink-GREATER THAN 2335 PSIG	11. Return to Step 1. OBSERVE NOTE AND CAUTIONS PRIOR TO STEP 1.

CAUTION: Steps 12 thru 15 should be performed quickly in order to establish RCS heat removal by RCS bleed and feed.

12. Actuate SI, if not previously actuated.	
13. Verify RCS feed path: a. Verify ECCS pump status: • CCPs - AT LEAST ONE RUNNING. -OR- • SI pumps - AT LEAST ONE RUNNING. b. Verify ECCS valve alignment - PROPER INJECTION LINEUP INDICATED ON MLBs.	13. Start pumps and align valves as necessary to establish a feed path using ATTACHMENT A or B. IF a feed path can NOT be established, THEN continue attempts to establish feed flow. Return to Step 7. OBSERVE CAUTION AND NOTES PRIOR TO STEP 7.

ACTION/EXPECTED RESPONSE | RESPONSE NOT OBTAINED

CAUTION:

- If RWST level lowers to less than 39%, ECCS should be aligned for cold leg recirculation using 19013-C, ES-1.3 TRANSFER TO COLD LEG RECIRCULATION.
- RHR pumps should not be run longer than 30 minutes without CCW to the RHR heat exchangers.

NOTE:

- Continued attempts to establish a secondary heat sink should use Steps 5, 7 and 9 as guidance.
- If bleed and feed has been initiated and RCS Core Exit temperatures are stable or lowering, feed flow to one steam generator at a time should be established at a rate of 30-100 gpm until level exceeds 9% WR [31% ADVERSE]. Feed flow rates should be controlled to prevent excessive RCS cooldown.

*23. Continue attempts to establish secondary heat sink in at least one SG:

- AFW flow.
- Main FW flow.
- Condensate flow.

24. Check for adequate secondary heat sink:

a. NR level in at least one SG - GREATER THAN 10% [32% ADVERSE].

a. Return to Step 23. (OBSERVE NOTES AND CAUTIONS PRIOR TO STEP 23.)

17. 013K3.03 001

The following Unit 1 conditions exist:

- The unit is operating at 100% Rated Thermal Power.
- Bus 1AY1A is on its regulated transformer for maintenance activities to be performed.
- An earthquake occurs and causes the following simultaneous failures:
  - a double ended guillotine main steam line break in containment
  - containment pressure is 25 psig
  - a loss of offsite power
  - ~~a fault on~~ bus 1BY1B de-energized
- Both diesel generators start and load as designed.

Which ONE of the following correctly states the status of the containment spray system several minutes after the diesel generators finish their load sequence?

A. Train "A" actuates, but Train "B" does not actuate.

B. Train "B" actuates, but Train "A" does not actuate.

C. Neither Train "A" or "B" actuate.

D. Both Train "A" and "B" actuate.

HAVE UTILITY VERIFY THAT AFTER DIESEL SEQUENCE HAS FINISHED THAT THE CONTAINMENT PRESSURE COULD BE > 21.5 PSIG.

K/A
013 Engineered Safety Features Actuation
K3.03 Knowledge of the effect that a loss or malfunction of the ESFAS will have on the following: Containment.

K/A MATCH ANALYSIS
The malfunction is the loss of 1BY1B and the effect on containment is that only one train of ESFAS equipment actuates.

ANSWER / DISTRACTOR ANALYSIS
A. Correct. The EDG will repower 1AY1A from its backup source and actuate the "A" Train spray components.
B. Incorrect. Relays are energize-to-actuate and Train "B" relays do not have power due to the fault. Plausible because most SSPS functions are de-energize to actuate.
C. Incorrect. Plausible because power supplies from both trains have issues.
D. Incorrect. Plausible because most SSPS functions are de-energize to actuate and power supplies from both trains are de-energized at one point or another during the above sequence.

REFERENCES
1. LO-LP-60324-05-C, Loss of 120VAC Inst Power, Rev. 8, 03/25/2002.
2. V-LO-TX-15101, Containment Spray, Rev. 6.

MCS	Time:	1	Points:	1.00	Version:	0	1	2	3	4	5	6	7	8	9
					Answer:	A	B	D	D	B	B	A	A	C	C

Scramble Range: A - D

Tier:	2	Group:	1
Key Word:	CONTAINMENT SPRAY	Cog Level:	C/A 4.3
Source:	N	Exam:	VG05301
Test:	R	Author/Reviewer:	MAB/RSB

17. 013K3.03 001

The following Unit 1 conditions exist:

- The unit is operating at 100% Rated Thermal Power.
- Bus 1AY1A is on its regulated transformer for maintenance activities to be performed.
- An earthquake occurs and causes the following simultaneous failures:
  - a double ended guillotine main steam line break in containment — CMT P=25 psig.
  - a loss of offsite power
  - a fault on bus 1BY1B
- Both diesel generators start and load as designed.

Which ONE of the following correctly states the status of the containment spray system several minutes after the diesel generators finish their load sequence?

A. Train "A" actuates, but Train "B" does not actuate.

B. Train "B" actuates, but Train "A" does not actuate.

C. Neither Train "A" or "B" actuate.

D. Both Train "A" and "B" actuate.

HAVE UTILITY VERIFY THAT AFTER DIESEL SEQUENCE HAS FINISHED THAT THE CONTAINMENT PRESSURE COULD BE > 21.5 PSIG.

K/A
013 Engineered Safety Features Actuation
K3.03 Knowledge of the effect that a loss or malfunction of the ESFAS will have on the following: Containment.

K/A MATCH ANALYSIS
The malfunction is the loss of 1BY1B and the effect on containment is that only one train of ESFAS equipment actuates.

ANSWER / DISTRACTOR ANALYSIS
A. Correct. The EDG will repower 1AY1A from its backup source and actuate the "A" Train spray components.
B. Incorrect. Relays are energize-to-actuate and Train "B" relays do not have power due to the fault. Plausible because most SSPS functions are de-energize to actuate.
C. Incorrect. Plausible because power supplies from both trains have issues.
D. Incorrect. Plausible because most SSPS functions are de-energize to actuate and power supplies from both trains are de-energized at one point or another during the above sequence.

REFERENCES
1. LO-LP-60324-05-C, Loss of 120VAC Inst Power, Rev. 8, 03/25/2002.
2. V-LO-TX-15101, Containment Spray, Rev. 6.

MCS	Time:	1	Points:	1.00	Version:	0 1 2 3 4 5 6 7 8 9	
					Answer:	A B D D B B A A C C	Scramble Range: A - D
Tier:		2			Group:	1	
Key Word:		CONTAINMENT SPRAY			Cog Level:	C/A 4.3	
Source:		N			Exam:	VG05301	
Test:		R			Author/Reviewer:	MAB/RSB	

2. 013K3.03 001

The following Unit 1 conditions exist:

Regulated Transformer

- The unit is operating at 100% Rated Thermal Power.
- Bus 1AY1A is on its backup power supply for maintenance activities to be performed.
- An earthquake occurs and causes a double ended guillotine main steam line break in containment, coincident with a loss of offsite power and fault on bus 1BY1B.
- Both diesel generators start and load as designed.

Which ONE of the following correctly states the status of the containment spray system several minutes after the diesel generators finish their load sequence?

A. Train "A" actuates, but Train "B" does not actuate.

B. Train "B" actuates, but Train "A" does not actuate.

C. Neither Train "A" or "B" actuate.

D. Both Train "A" and "B" actuate.

— An E.Q occurs and causes:
— Double Ended ...
— LOOP ...
— Fault ...
(remove underlining)

HAVE UTILITY VERIFY THAT AFTER DIESEL SEQUENCE HAS FINISHED THAT THE CONTAINMENT PRESSURE COULD BE > 21.5 PSIG.

K/A
013 Engineered Safety Features Actuation
K3.03 Knowledge of the effect that a loss or malfunction of the ESFAS will have on the following: Containment.

K/A MATCH ANALYSIS
The malfunction is the loss of 1BY1B and the effect on containment is that only one train of ESFAS equipment actuates.

ANSWER / DISTRACTOR ANALYSIS
A. Correct. The EDG will repower 1AY1A from its backup source and actuate the "A" Train spray components.
B. Incorrect. Relays are energize-to-actuate and Train "B" relays do not have power due to the fault. Plausible because most SSPS functions are de-energize to actuate.
C. Incorrect. Plausible because power supplies from both trains have issues.
D. Incorrect. Plausible because most SSPS functions are de-energize to actuate and power supplies from both trains are de-energized at one point or another during the above sequence.

REFERENCES
1. LO-LP-60324-05-C, Loss of 120VAC Inst Power, Rev. 8, 03/25/2002.
2. V-LO-TX-15101, Containment Spray, Rev. 6.

MCS	Time:	1	Points:	1.00	Version:	0 1 2 3 4 5 6 7 8 9	
					Answer:	A B D D B B A A C C	Scramble Range: A - D

Tier:	2	Group:	1
Key Word:	CONTAINMENT SPRAY	Cog Level:	C/A 4.3
Source:	N	Exam:	VG05301
Test:	R	Author/Reviewer:	MAB/RSB

isolation valve. The encapsulation vessel acts as an extension of the containment wall. The vessel prevents leakage of Containment sump water from Containment in the event of a leak in the sump piping.

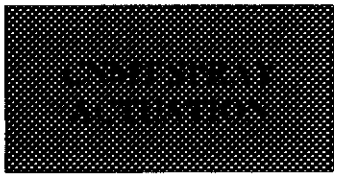

15.4 INSTRUMENTION AND CONTROLS

Containment Spray initiates automatically on high containment pressure of ≥ 21.5 psig (CNMT HI-3) sensed by 2-out-of-4 pressure channel coincidence. Instrument used are; PT-934, PT-935, PT-936, and PT-937. **T.S. (4) Containment pressure channels shall be operable in modes 1, 2, 3.** Bi-stables for containment spray actuation are "energize to actuate" to prevent actuation on a loss of instrument power. Containment Spray actuation is not desired unless absolutely needed. Cleanup from a spray actuation would be very costly and equipment damage could be irreparable. Having two separate slave relays for spray actuation gives additional protection from accidental spray initiation. Slave relay K-643 starts the Spray pumps and K-644 opens the discharge valves.

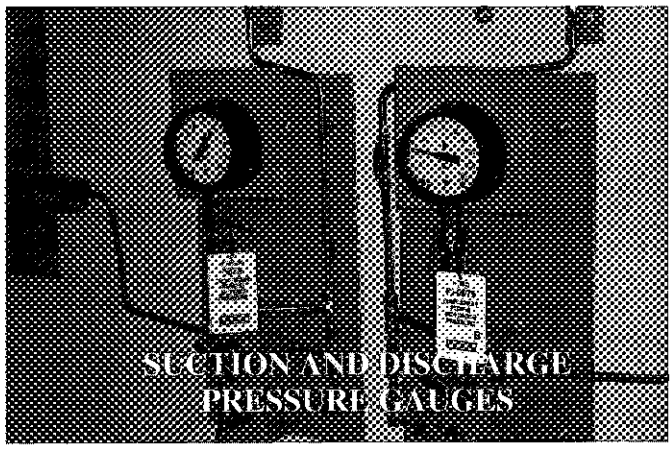

The main control room monitoring capability of the Containment Spray system is very limited at best. Containment pressure trend to verify effectiveness is the only parameter the operator can monitor. There are notes in the Emergency Operator Procedure that give direction for local monitoring, if radiation levels in the Aux Building permit.
Note:

Satisfactory CS pump operation is verified by verifying containment pressure is stable or decreasing and by local observation of CS pump suction and discharge pressure gauges, radiation levels permitting.

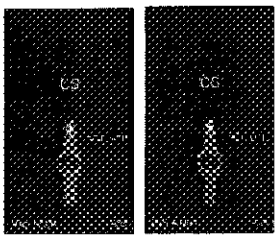

Radiation levels would be expected be above normal during accident conditions, especially during the recirculation phase.

The manual actuation function allows the operators to manually initiate Containment spray should automatic systems fail to respond. Two switches on the Main Control Board that must be turn simultaneously produces both a Containment Spray and a Containment Ventilation Isolation actuation. Simultaneous operation of the switches has been designed to prevent inadvertent spray actuation. There are two sets of Manual Containment Spray actuation hand switches located on "A" and "C" panels in the Main Control Room.

III. LESSON OUTLINE: NOTES

12. Loss of Regulated Instrument Panel 1NYJ

13. Loss of Regulated Instrument Panel 1NYR

14. Loss of Regulated Instrument Panel 1NYS

15. Loss of Regulated Instrument Panel 1NYRS

16. Loss of Regulated Instrument Panel 1NY01

D. Present Lesson Objectives

LO-TP-60324-001

II. PRESENTATION

A. Loss of Vital Instrument Panel 1AY1A

1. Symptoms

a. All Channel I trip status lights energized.

1) Probably the most significant and easiest method of determining the loss of 1AY1A.

b. Loss of N31, N35, N41 simultaneously.

c. 1AY1A Trouble Alarm

d. Inverter 1AD1I1 Trouble Alarm

2. Concerns and major effects of loss of 1AY1A **Objective 1**

a. SG 1 and 4 ARV will not operate from the control room or remote shutdown panel.

b. May lose letdown and have max charging if LT-459 is selected for control.

c. Tref (PT-505) will fail causing AUTO Rods to step in at 72 steps/min

d. Steam Generator levels and steam flows fail causing significant transient on all the steam generators.

e. If unable to stabilize plant conditions may require plant shutdown or trip. **Objective 3**

f. Plant will trip if below P-10 due to N35 trip signal when de-energized.

g. General Warning on Train A SSPS. **Objective 4**

Without power from 1AY1A there is no power to Train A SSPS slave relays.

Any actuation signal requiring operation of slave relays will be blocked.

If SI signal present, only Train B equipment will Auto align.

Train A equipment must be manually re-aligned in this case.

h. Plant will trip if another channel instrument bistable is tripped and/or channel is in test.

3. Actions **Objective 2**

a. Verify reactor power > P-10 otherwise verify Reactor trio and go to 19000-C.

b. Rods in MANUAL

1) Prevents rod motion due to loss of PT-505 (Tref)

2) Rods would step in to match Tref of 557°F

c. Control SG levels between 60 - 70%

1) Some or all of the controlling channels of steam flow, feed flow and SG levels will fail to zero.

2) Placing all FRV's in Manual may increase the difficulty of controlling the levels

3) Utilize the trend charts for each SG.

The selected control channels for each parameter is displayed on the chart.

If SG level, steam flow and feed flow are all above), then that FRV should be left in AUTO.

4) Place Main Feed Pump Speed controller in MANUAL since some or all selected steam flows have failed

d. Position Feed Control selector switches to unaffected channels as listed in the procedure.

1) If FRV not in MANUAL and you select a different channel it will induce a

3) CRI

C. Loss of Vital Instrument Panel 1BY1B

1. Symptoms - ***Same as on loss of 1AY1A just Train B***

   a. All Channel II trip status lights energized.

      1) Probably the most significant and easiest method of determining the loss of 1BY1B.

   b. Loss of N32, N36, N42 simultaneously.

   c. 1BY1B Trouble Alarm

   d. Inverter 1BD1I1 Trouble Alarm

2. Concerns and major effects of loss of 1BY1B — **Objective 1**
   Same as 1AY1A except Train B equipment

   a. SG 2 and 3 ARV will not operate from the control room or remote shutdown panel(NOTE).

   b. May lose letdown and have max charging if LT-460 is selected for control.

   c. Steam Generator levels and steam lows fail causing significant transient on all the steam generators. — Normally all selected to channel 1 instruments

   d. If unable to stabilize plant conditions may require plant shutdown or trip. — **Objective 3**

   e. Plant will trip if below P-10 due to N36 trip signal when de-energized.

   f. General Warning on Train B SSPS. — **Objective 4**

      Without power from 1BY1B there is no power to Train B SSPS slave relays.

      Any actuation signal requiring operation of slave relays will be blocked.

      If SI signal present, only Train A equipment will Auto align.

      Train B equipment must be manually re-aligned in this case.

   g. Plant will trip if another channel instrument bistable is tripped and/or channel is in test.

3. Actions **Objective 2**

SAME AS LOSS of 1AY1A EXCEPT TRAIN B

a. Rods in MANUAL

1) Prevents inadvertent rod motion due to loss of N42 or Loop 2 Tavg

b. Control SG levels between 60 - 70%

1) Some or all of the controlling channels of steam flow, feed flow and SG levels will fail to zero.

2) Placing all FRV's in Manual may increase the difficulty of controlling the levels

3) Utilize the trend charts for each SG.

The selected control channels for each parameter is displayed on the chart.

If SG level, steam flow and feed flow are all above), then that FRV should be left in AUTO.

4) Place Main Feed Pump Speed controller in MANUAL since some or all selecteds steam flows have failed.

The Feed Pump controller may have to be placed in MAN to prevent them from slowing down to reduce delta P.

c. Position Feed Control selector switches to unaffected channels as listed in the procedure.

1) If FRV not in MANUAL and you select a different channel it will induce a transient on that SG.

2) If Feed Pump speed controller not in manual and steam flow channel(s) are changed, the feed pumps will speed up, inducing a transient.

d. Return MFRV's to AUTO when stabilized.

1) If Feed Pump Controller in MAN, return it to Auto also.

2) Verify on trend charts that selected channels are reading properly prior

QUESTIONS REPORT
for Voglte 2005-301 Draft

1. 014A1.03 001

Which ONE of the following correctly states the lowest indicated DRPI reading that would verify Control Bank C control rods above Technical Specification rod insertion limits given the following conditions?

- Post-critical data is being recorded following a critical approach
- A DRPI DATA "A" FAILURE has occurred

A. 46 Steps

B. 56 Steps

C. 58 Steps

D. 60 Steps

K/A
014 Rod Position Indication
A1.03 Ability to predict and / or monitor changes in parameters (to prevent exceeding design limits) associated with operating the RPIS controls, including: PDIL, PPDIL.

K/A MATCH ANALYSIS
A failure in DRPI, rod position indication, reduces the accuracy of that indication. Therefore, operators must then know, based on that failure, what the lowest indicated rod position, as read on DRPI, would allow for verification of compliance with PDIL requirements.

ANSWER / DISTRACTOR ANALYSIS
A. Incorrect. Plausible because 46 steps is the TS PDIL. Incorrect because with reduced accuracy, rods must indicate higher than PDIL to ensure that PDIL limits are not being exceeded.
B. Incorrect. Plausible because reduced accuracy with a DATA "A" failure is (+10, -4 steps). PDIL + 10 = 56 steps. Incorrect because 60 steps is required as stated in distractor analysis for the correct answer "D".
C. Incorrect. Plausible because DRPI accuracy is 12 steps and PDIL + 12 steps = 58 steps. Incorrect because 60 steps is required as stated in distractor analysis for the correct answer "D".
D. Correct. Data "A" Failure reduces accuracy to (+10, -4 steps). Therefore, rods must be at PDIL (46 steps) plus 4 steps to ensure compliance with PDIL. Furthermore, DRPI will only read out in 12 step increments; therefore, 60 steps is needed to ensure PDIL limits are not being exceeded.

REFERENCES
1. Tech Specs referred to in answer choices.

QUESTIONS REPORT

for Voglte 2005-301 Draft

MCS Time: 1 Points: 1.00 Version: 0 1 2 3 4 5 6 7 8 9

Answer: D B D D C C B D D A Scramble Range: A - D

Tier:	2	Group:	2
Key Word:	PDIL SDM DRPI	Cog Level:	C/A 3.6
Source:	N	Exam:	VG05301
Test:	R	Author/Reviewer:	MAB/RSB

Digital Rod Position Indication System

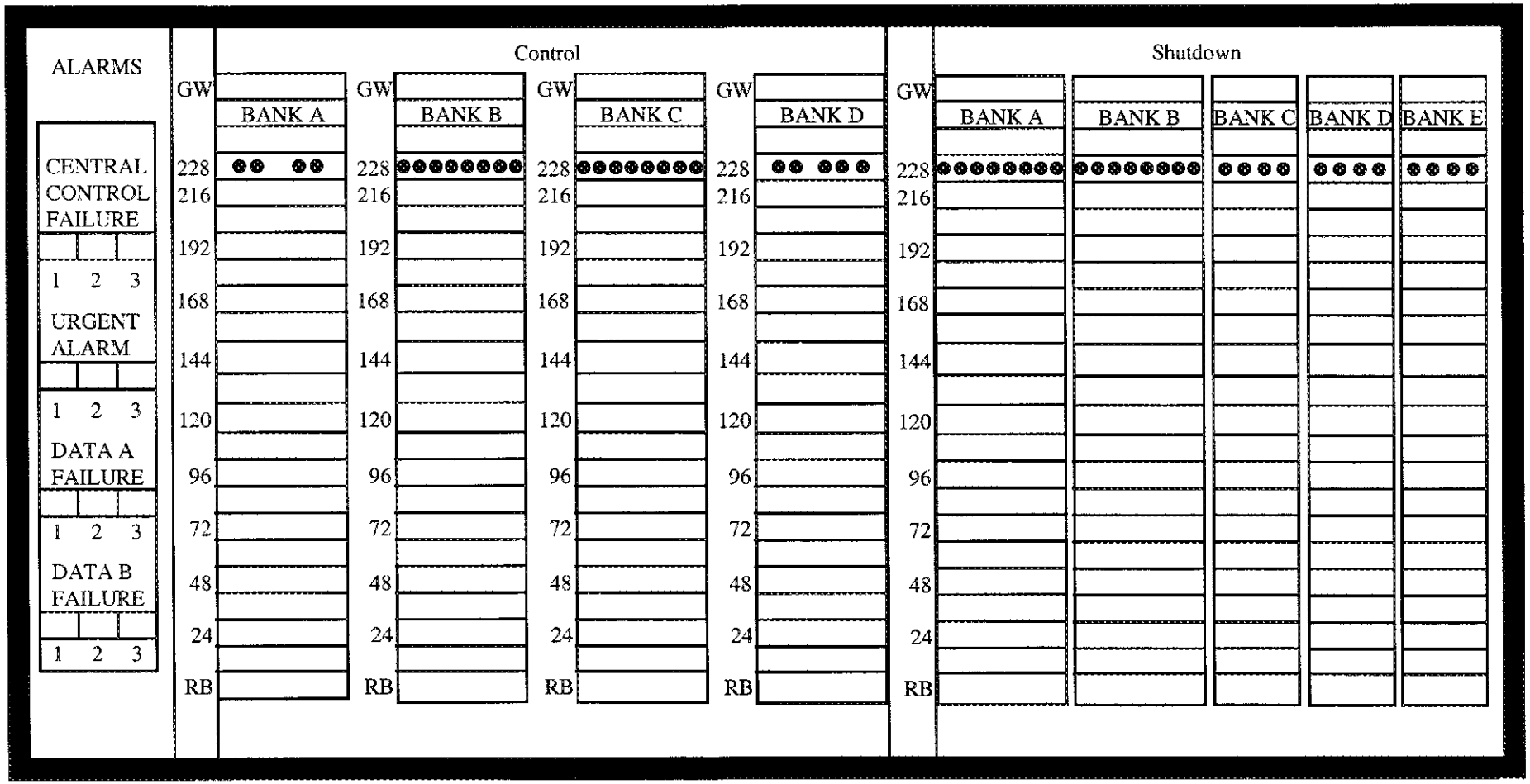

18. 014A1.03 001

The following conditions exist on Unit 1:

- The reactor is at 100% rated thermal power
- RPI URGENT FAILURE alarm annuncites
- DRPI general warning LED for control rod M-12 is flashing
- DRPI rod bottom light is lit for control rod M-12
- Tave remains stable at 586.4 °F

Which ONE of the following correctly states Technical Specifications required actions?

A. Enter LCO 3.2.4, Quadrant Power Tilt Ratio, action statement(s) due to exceeding allowable flux tilt from the failure associated with rod M-12.

B. ✓ Enter LCO 3.1.7, Rod Position Indication, action statement(s) due to DRPI being inoperable for rod M-12.

C. Enter LCO 3.1.1, Shutdown Margin, action statement(s) due to the failure associated with rod M-12.

D. Enter LCO 3.1.6, Control Bank Insertion Limits, AND LCO 3.1.4, Rod Group Alignment Limits, action statement(s) due to exceeding control rod insertion and rod group alignment limits for rod M-12.

K/A
014 Rod Position Indication
A1.03 Ability to predict and / or monitor changes in parameters (to prevent exceeding design limits) associated with operating the RPIS controls, including: PDIL, PPDIL.

K/A MATCH ANALYSIS
A failure in DRPI, rod position indication, reduces the accuracy of that indication. Therefore, operators must then know, based on that failure, what the lowest indicated rod position, as read on DRPI, would allow for verification of compliance with PDIL requirements.

ANSWER / DISTRACTOR ANALYSIS
A. Incorrect. Plausible because this would be correct for an incorrect diagnosis for a dropped rod.
B. Correct. This is a DRPI failure. LCO 3.1.7 cond A applies.
C. Incorrect. Plausible due to a misdiagnosis by the operator of the failure as a dropped rod. This would lead to violating rod insertion limits which would lead to potential loss of SDM.
D. Incorrect. Plausible because these LCOs would be entered if the control rod actually dropped.

REFERENCES
1. Tech Specs referred to in answer choices.

MCS	Time:	1	Points:	1.00	Version:	0	1	2	3	4	5	6	7	8	9
					Answer:	B	B	D	A	A	C	B	B	B	B

Scramble Range: A - D

Tier:	2	Group:	2
Key Word:	PDIL SDM DRPI	Cog Level:	C/A 3.6
Source:	N	Exam:	VG05301
Test:	R	Author/Reviewer:	MAB/RSB

1. 014A1.03 001

The following conditions exist on Unit 1:

- The reactor is at 100% rated thermal power
- RPI URGENT FAILURE alarm annuncites
- DRPI general warning LED for control rod M-12 is flashing
- DRPI rod bottom light is lit for control rod M-12
- Tave remains stable at 586.4 °F

Which ONE of the following correctly states Technical Specifications required actions?

A. Enter LCO 3.2.4, Quadrant Power Tilt Ratio, action statement(s) due to exceeding allowable flux tilt from the failure associated with rod M-12.

B. Enter LCO 3.1.7, Rod Position Indication, action statement(s) due to DRPI being inoperable for rod M-12.

C. Enter LCO 3.1.1, Shutdown Margin, action statement(s) due to the failure associated with rod M-12.

D. Enter LCO 3.1.6, Control Bank Insertion Limits, AND LCO 3.1.4, Rod Group Alignment Limits, action statement(s) due to exceeding control rod insertion and rod group alignment limits for rod M-12.

K/A
014 Rod Position Indication
A1.03 Ability to predict and / or monitor changes in parameters (to prevent exceeding design limits) associated with operating the RPIS controls, including: PDIL, PPDIL.

K/A MATCH ANALYSIS
A failure in DRPI, rod position indication, reduces the accuracy of that indication. Therefore, operators must then know, based on that failure, what the lowest indicated rod position, as read on DRPI, would allow for verification of compliance with PDIL requirements.

ANSWER / DISTRACTOR ANALYSIS
A. Incorrect. Plausible because this would be correct for an incorrect diagnosis for a dropped rod.
B. Correct. This is a DRPI failure. LCO 3.1.7 cond A applies.
C. Incorrect. Plausible due to a misdiagnosis by the operator of the failure as a dropped rod. This would lead to violating rod insertion limits which would lead to potential loss of SDM.
D. Incorrect. Plausible because these LCOs would be entered if the control rod actually dropped.

REFERENCES
1. Tech Specs referred to in answer choices.

MCS	Time:	1	Points:	1.00	Version:	0	1	2	3	4	5	6	7	8	9	
					Answer:	B	B	D	A	A	C	B	B	B	B	Scramble Range: A - D

Tier:	2	Group:	2
Key Word:	PDIL SDM DRPI	Cog Level:	C/A 3.6
Source:	N	Exam:	VG05301
Test:	R	Author/Reviewer:	MAB/RSB

3.1 REACTIVITY CONTROL SYSTEMS

3.1.1 SHUTDOWN MARGIN (SDM)

LCO 3.1.1 SDM shall be ≥ the limit specified in the COLR.

APPLICABILITY: MODES 3, 4, and 5.

ACTIONS

----------NOTE----------
While this LCO is not met, transition to a lower MODE within the Applicability, and entry into MODE 5 from MODE 6 is not permitted.

CONDITION	REQUIRED ACTION	COMPLETION TIME
A. SDM not within limit.	A.1 Initiate boration to restore SDM to within limit.	15 minutes

SURVEILLANCE REQUIREMENTS

SURVEILLANCE		FREQUENCY
SR 3.1.1.1	Verify SDM is ≥ the limit specified in the COLR.	24 hours

3.1 REACTIVITY CONTROL SYSTEMS

3.1.6 Control Bank Insertion Limits

LCO 3.1.6 Control banks shall be within the insertion, sequence, and overlap limits specified in the COLR.

APPLICABILITY: MODE 1,
MODE 2 with $k_{eff} \geq 1.0$.

----------NOTE----------
This LCO is not applicable while performing SR 3.1.4.2.

ACTIONS

CONDITION	REQUIRED ACTION	COMPLETION TIME
A. Control bank insertion limits not met.	A.1.1 Verify SDM is ≥ the limit specified in the COLR.	1 hour
	OR	
	A.1.2 Initiate boration to restore SDM to within limit.	1 hour
	AND	
	A.2 Restore control bank(s) to within limits.	2 hours

(continued)

3.1 REACTIVITY CONTROL SYSTEMS

3.1.7 Rod Position Indication

LCO 3.1.7 The Digital Rod Position Indication (DRPI) System and the Demand Position Indication System shall be OPERABLE.

APPLICABILITY: MODES 1 and 2.

ACTIONS

-----NOTE-----
Separate Condition entry is allowed for each group with no more than one inoperable rod position indicator in the group and for each bank with no more than one inoperable demand position indicator in the bank.

CONDITION	REQUIRED ACTION		COMPLETION TIME
A. One DRPI per group inoperable for one or more groups.	A.1	Verify the position of the rods with inoperable position indicators by using movable incore detectors.	Once per 8 hours
	OR		
	A.2	Reduce THERMAL POWER to ≤ 50% RTP.	8 hours
B. One or more rods with inoperable DRPIs have been moved in excess of 24 steps in one direction since the last determination of the rod's position.	B.1	Verify the position of the rods with inoperable DRPIs by using movable incore detectors.	8 hours
	OR		
			(continued)

3.2 POWER DISTRIBUTION LIMITS

3.2.4 QUADRANT POWER TILT RATIO (QPTR)

LCO 3.2.4 The QPTR shall be ≤ 1.02.

APPLICABILITY: MODE 1 with THERMAL POWER > 50% RTP.

ACTIONS

CONDITION	REQUIRED ACTION		COMPLETION TIME
A. ----------NOTE---------- Required Action A.6 must be completed whenever Required Action A.5 is implemented. ----------	A.1	Limit THERMAL POWER to ≥ 3% below RTP for each 1% of QPTR > 1.00.	2 hours
	AND		
	A.2.1	Perform SR 3.2.4.1.	Once per 12 hours
QPTR not within limit.	AND		
	A.2.2	Limit THERMAL POWER to ≥ 3% below RTP for each 1% QPTR > 1.00.	----------NOTE---------- For performances of Required Action A.2.2 the Completion Time is measured from the completion of SR 3.2.4.1. ---------- 2 hours
	AND		
	A.3	Perform SR 3.2.1.1 and SR 3.2.2.1.	Within 24 hours after achieving equilibrium conditions with THERMAL POWER limited by Required Actions A.1 and A.2.2

(continued)

18. 014A1.03 001

What is the lowest indicated DRPI reading that would verify Bank C control rods above Technical Specification rod insertion limts given the following conditions?

- Post-critical data is being recorded following a critical approach
- A DRPI DATA "A" FAILURE alarm has annunciated

A. 42 Steps

B. 46 Steps

C✓ 50 Steps

D. 56 Steps

K/A
014 Rod Position Indication
A1.03 Ability to predict and / or monitor changes in parameters (to prevent exceeding design limits) associated with operating the RPIS controls, including: PDIL, PPDIL.

K/A MATCH ANALYSIS
A failure in DRPI, rod position indication, reduces the accuracy of that indication. Therefore, operators must then know, based on that failure, what the lowest indicated rod position, as read on DRPI, would allow for verification of compliance with PDIL requirements.

ANSWER / DISTRACTOR ANALYSIS
A. Incorrect. Plausible because DRPI is normally accurate to +/- 4 Steps and PDIL is 46 Steps (46 - 4 = 42 Steps).
B. Incorrect. Plausible because this is the PDIL for zero power.
C. Correct. Data B Failure reduces accuracy to (+ 10, - 4 steps). Therefore, Rods must be at PDIL (46 Steps) plus 4 Steps to ensure compliance with PDIL limits.
D. Incorrect. Plausible because this would be correct with a Data B Failure (46 + 10 Steps).

REFERENCES
1. 12003-C, Reactor Startup (Mode 3 to Mode 2), Rev. 39, 5-11-2004.
2. COLR, Unit 2, Cycle 11, Figure 3.
3. V-LO-TX-27201, Rod Position Indication.

MCS Time: 1 Points: 1.00 Version: 0 1 2 3 4 5 6 7 8 9
Answer: C D D C B A B A B C Scramble Range: A - D

QUESTIONS REPORT
for VogIte 2005-301 Draft

Tier:	2	Group:	2
Key Word:	PDIL SDM DRPI	Cog Level:	C/A 3.6
Source:	N	Exam:	VG05301
Test:	R	Author/Reviewer:	MAB/RSB

3. 014A1.03 001

What is the lowest indicated DRPI reading that would verify Bank C control rods above Technical Specification rod insertion limts given the following conditions?

- Post-critical data is being recorded following a critical approach
- A DRPI DATA "A" FAILURE alarm has annunciated (LEDs)

A. 42 Steps

B. 46 Steps

C. 50 Steps

D. 56 Steps

K/A
014 Rod Position Indication
A1.03 Ability to predict and / or monitor changes in parameters (to prevent exceeding design limits) associated with operating the RPIS controls, including: PDIL, PPDIL.

K/A MATCH ANALYSIS
A failure in DRPI, rod position indication, reduces the accuracy of that indication. Therefore, operators must then know, based on that failure, what the lowest indicated rod position, as read on DRPI, would allow for verification of compliance with PDIL requirements.

ANSWER / DISTRACTOR ANALYSIS
A. Incorrect. Plausible because DRPI is normally accurate to +/- 4 Steps and PDIL is 46 Steps (46 - 4 = 42 Steps).
B. Incorrect. Plausible because this is the PDIL for zero power.
C. Correct. Data B Failure reduces accuracy to (+ 10, - 4 steps). Therefore, Rods must be at PDIL (46 Steps) plus 4 Steps to ensure compliance with PDIL limits.
D. Incorrect. Plausible because this would be correct with a Data B Failure (46 + 10 Steps).

REFERENCES
1. 12003-C, Reactor Startup (Mode 3 to Mode 2), Rev. 39, 5-11-2004.
2. COLR, Unit 2, Cycle 11, Figure 3.
3. V-LO-TX-27201, Rod Position Indication.

MCS Time: 1 Points: 1.00 Version: 0 1 2 3 4 5 6 7 8 9
Answer: C D D C B A B A B C Scramble Range: A - D

QUESTIONS REPORT
for Vogite 2005-301 Draft

Tier:	2	Group:	2
Key Word:	PDIL SDM DRPI	Cog Level:	C/A 3.6
Source:	N	Exam:	VG05301
Test:	R	Author/Reviewer:	MAB/RSB

PRB REVIEW REQUIRED

REACTOR STARTUP (MODE 3 TO MODE 2)

PROCEDURE USAGE REQUIREMENTS-		SECTIONS
Continuous Use:	Procedure must be open and readily available at the work location. Follow procedure step by step unless otherwise directed.	**ALL**
Reference Use:	Procedure or applicable section(s) available at the work location for ready reference by person performing steps.	**NONE**
Information Use:	Available on plant site for reference as needed.	**NONE**

2 **LIMITATIONS**

2.2.1 In Mode 3 below 551°F, the RCS should be borated to greater than the ARO critical boron concentration for the existing temperature prior to closing the RTBs and enabling the Rod Control System.

2.2.2 In Mode 3 above 551°F, the PR High Flux-Low Setpoint function should be operable prior to closing the RTBs and enabling the Rod Control System.

2.2.3 In Mode 3, two channels of source range HI FLUX AT SHUTDOWN ALARM (HFASA) shall be operable with a setpoint of less than or equal to 2.30 times background. The HFASA may be blocked in mode 3 during reactor startup. (TS 3.3.8) (CO 33053)

2.2.4 Prior to entering Mode 2, each shutdown bank shall be within insertion limits specified in the COLR. (TS 3.1.5) (CO 231, CO 3137)

2.2.5 In mode 3, shutdown margin shall be greater than or equal to the limit specified in the COLR. (TS 3.1.1) (CO 3126)

2.2.6 In Mode 2, shutdown margin shall be greater than or equal to the limit specified in the COLR. (TR 13.1.1) (CO 3126)

2.2.7 In Mode 2, the control banks shall be within the insertion, sequence and overlap limits specified in the COLR. (TS 3.1.6) (CO 25417, CO 30520)

2.2.8 In Mode 2 (below P-6) and in Mode 3, two channels of Source Range Instrumentation shall be operable. (TS 3.3.1, function 5)

2.2.9 In Mode 2, two channels of Intermediate Range Instrumentation shall be operable. (TS 3.3.1, functions 4 and 16)

2.10 In Mode 2, all shutdown and control rods shall be operable with their individual rod positions within ±12 steps of their group step counter demand position. (TS 3.1.4)

2.2.11 When the reactor is critical, each RCS loop Tavg shall be greater than or equal to 551°F (541°F during LPPT). (TS 3.4.2) (CO 206)

2.2.12 To ensure the moderator temperature coefficient remains within the limits of TS 3.1.3, terminate rod withdrawal if criticality is projected to occur above the administrative withdrawal limits for the control banks except during LPPT. (TS 3.1.3) (CO 5)

2.2.13 If this startup is following a refueling outage and the reactor will be taken critical by dilution for LPPT, Mode 2 entry should be declared when dilution to criticality commences.

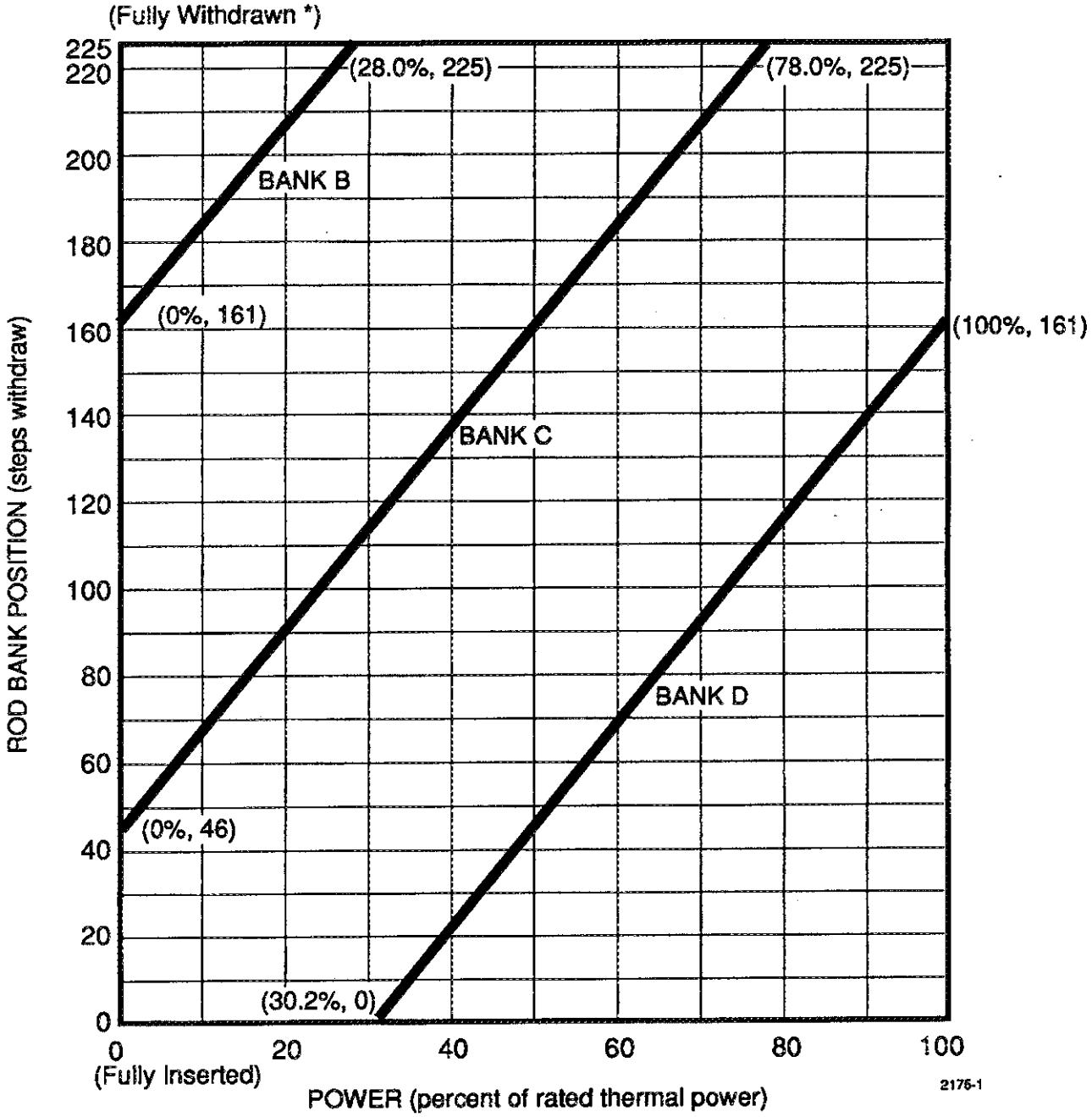

* Fully withdrawn shall be the condition where control rods are at a position within the interval ≥225 and ≤231 steps withdrawn.

Note: The Rod Bank Insertion Limits are based on the control bank withdrawal sequence A, B, C, D and a control bank tip-to-tip distance of 115 steps.

FIGURE 3

ROD BANK INSERTION LIMITS VERSUS % OF RATED THERMAL POWER

F. INDICATIONS AND ALARMS

DRPI DISPLAY CONSOLE ALARM (LED's)	SETPOINT
URGENT	(1) Error in both A and B data cabinets (2) Data from data cabinets differ by more than 1 bit (or coil) (3) The sum of data A and B is greater than 38 coils. (This means the data is bad since the highest the rod can be withdrawn is 38 coil stacks)
DATA "A" FAILURE	Data from Data Cabinet A is in error - system at 1/2 accuracy (+10, -4 steps)
DATA "B" FAILURE	Data from Data Cabinet B is in error - system at 1/2 accuracy (-10, +4 steps)
CENTRAL CONTROL FAILURE	Glowing LED at any one of the three positions indicates that the card has automatically disconnected itself from system, its output has been disregarded due to it not matching the other two cards (presumably incorrect).
G. W. (GENERAL WARNING)	Flashing LED indicates: (1) Either A or B data for rod is defective and has been rejected (2) Urgent alarm for rod where G.W. is present
R. B. (ROD BOTTOM) LED LIGHT	***Normal operation*** - Rod has dropped to 0 (+ or - 3 steps) ***Urgent Failure*** - If both data A & B are not available DRPI does not know the location of the rod and it illuminates the rod bottom LED for the affected rod. This will be the only position LED illuminated for the rod.

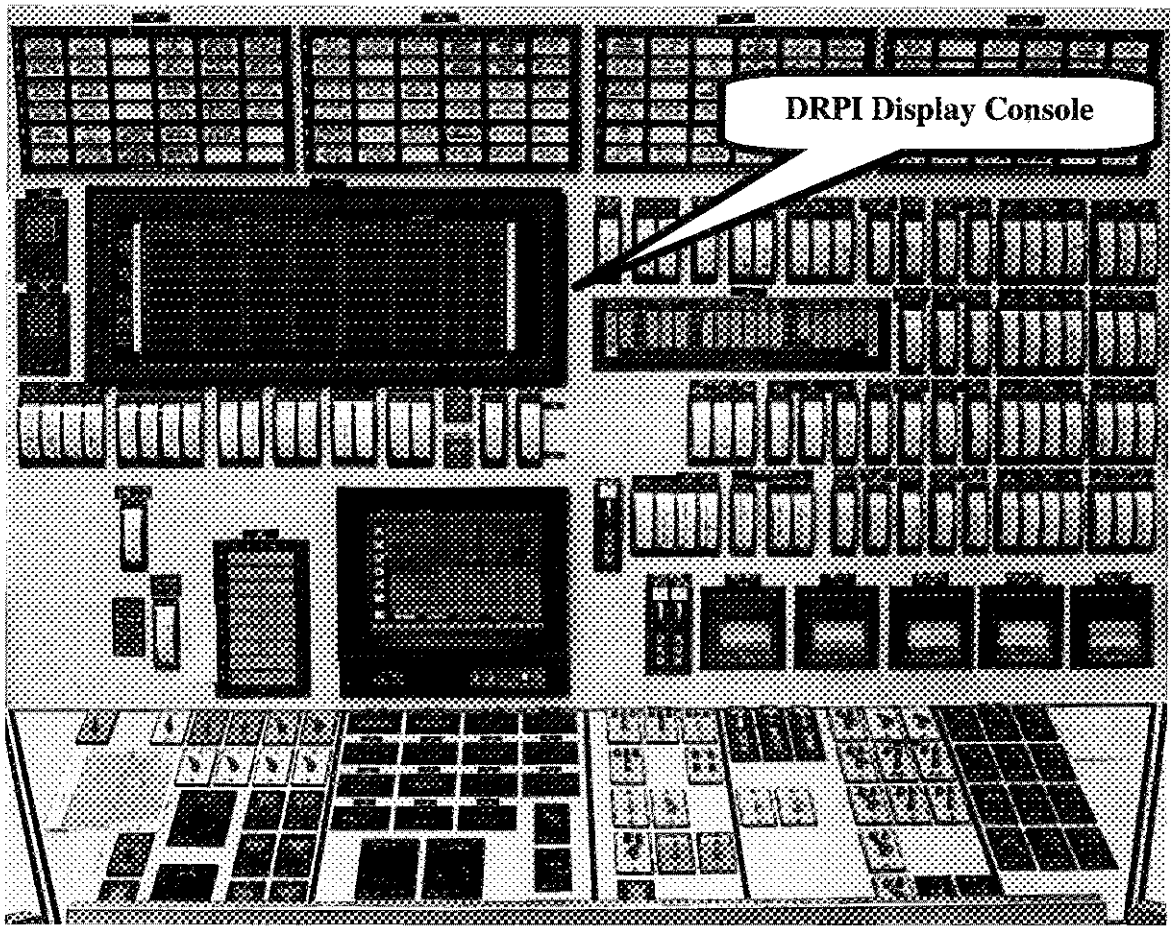

The DRPI System is a highly reliable system due to its direct method of rod position determination. This system is less accurate than the DPIS. Coils of wire with an applied AC voltage are stacked around the non-magnetic control rod drive mechanism (CRDM) housing at six-step increments. The control rod is a ferro-magnetic material which is detected by the change in voltage across the penetrated detector coils, as the CRDM passes through the detector housing. The change in voltage across each coil results from a change in the magnetic flux induced in each coil by the control rod drive shaft which concentrates the lines of magnetic flux.

The relatively low accuracy of this system is due to the placement of the coils, which are spaced farther apart (3 3/4") than an actual rod step (5/8"). Rod position accuracy with all coils operable is within plus-or-minus 4 steps for all control rods.

There is a DRPI rod position indicator for each of the 53 control rods. Each rod's position is indicated by a vertical column of 39 light-emitting diodes (LEDs) on the DRPI display panel located on the QMCB section C. The DRPI System measures rod position without penetrating the rod drive housing which minimizes the RCS pressure boundary penetrations.

19. 015/017G2.4.10 001

Unit 1 Operators were in the process of swapping to Main Feedwater Regulating Valves in accordance with 12004-C, Power Operation (Mode 1), when the following alarms annunciated:

- ALB11-F06, UNDERFREQUENCY RCP BUS ALERT
- ALB11-E06, UNDERVOLTAGE RCP BUS ALERT

Subsequently Operators note that Bus 1NAA was de-energized.

Which ONE of the following correctly states the status of the RCPs?

A. Only #1 and #2 RCPs trip.

B. Only #1 and #3 RCPs trip.

C. Only #2 and #4 RCPs trip.

D. All RCPs trip.

Dan called @ 1415 hrs

Sesse had another question.

Q: Does "trip" mean "not running" or does it mean the breaker has opened?

A: I told Dan if he wants to replace "trip" with "not running" that that would be O.K. It would not alter the correct answer and it would maintain the plausibility of the distractors.

K/A
015/017 RCP Malfunctions
G2.4.10 Knowledge of annunciator response procedures.

K/A MATCH ANALYSIS
The RCP malfunction is a loss of power. Guidance is contained in C1-F06 that states that all four RCPs will trip if P-7 is made up. Therefore, the question tests knowledge in the ARPs related to an RCP malfunction.

ANSWER / DISTRACTOR ANALYSIS
A. Incorrect. Plausible because applicant may confuse which RCPs are powered by 1NAA.
B. Incorrect. Plausible because this would be correct if P-7 were not made up.
C. Incorrect. Plausible because applicant may confuse which RCPs are powered by 1NAA.
D. Correct. P-7 is made up because MFRV swap occurs between 16 and 20% RTP (P-7 logic is 2/4 NIs or 1/2 turb pwr > 10%). Therefore, according to 17011-1, 1C-F06, a trip of all RCPs will occur if Bus 1NAA is lost.

REFERENCES
1. 17011-1, Annunciator Response Procedures for ALB 11 on Panel 1C1 on MCB, Rev. 13, 08/01/03.
2. V-LO-TX-28101, RPS-SSPS-AMSAC, Rev. 3.0.
3. 12004-C, Power Operation (Mode 1), Rev. 64, 05/08/2004.

MCS	Time: 1	Points: 1.00	Version:	0 1 2 3 4 5 6 7 8 9			
			Answer:	D A B C C D C B B D		Scramble Range: A - D	
Tier:	1			Group:	1		
Key Word:	RCP ALARM ANNUNCIATO			Cog Level:	C/ A 3.0		
Source:	N			Exam:	VG05301		
Test:	R			Author/Reviewer:	MAB/RSB		

19. 015/017G2.4.10 001

Unit 1 Operators were in the process of swapping to Main Feedwater Regulating Valves in accordance with 12004-C, Power Operation (Mode 1), when the following alarms annunciated:

- ALB11-F06, UNDERFREQUENCY RCP BUS ALERT
- ALB11-E06, UNDERVOLTAGE RCP BUS ALERT

Subsequently Operators note that Bus 1NAA was de-energized.

Which ONE of the following correctly states the status of the RCPs?

A. Only #1 and #2 RCPs trip.

B. Only #1 and #3 RCPs trip.

C. Only #2 and #4 RCPs trip.

D. All RCPs trip.

K/A
015/017 RCP Malfunctions
G2.4.10 Knowledge of annunciator response procedures.

K/A MATCH ANALYSIS
The RCP malfunction is a loss of power. Guidance is contained in C1-F06 that states that all four RCPs will trip if P-7 is made up. Therefore, the question tests knowledge in the ARPs related to an RCP malfunction.

ANSWER / DISTRACTOR ANALYSIS
A. Incorrect. Plausible because applicant may confuse which RCPs are powered by 1NAA.
B. Incorrect. Plausible because this would be correct if P-7 were not made up.
C. Incorrect. Plausible because applicant may confuse which RCPs are powered by 1NAA.
D. Correct. P-7 is made up because MFRV swap occurs between 16 and 20% RTP (P-7 logic is 2/4 NIs or 1/2 turb pwr > 10%). Therefore, according to 17011-1, 1C-F06, a trip of all RCPs will occur if Bus 1NAA is lost.

REFERENCES
1. 17011-1, Annunciator Response Procedures for ALB 11 on Panel 1C1 on MCB, Rev. 13, 08/01/03.
2. V-LO-TX-28101, RPS-SSPS-AMSAC, Rev. 3.0.
3. 12004-C, Power Operation (Mode 1), Rev. 64, 05/08/2004.

MCS	Time:	1	Points:	1.00	Version:	0 1 2 3 4 5 6 7 8 9	
					Answer:	D A B C C D C B B D	Scramble Range: A - D

Tier:	1	Group:	1
Key Word:	RCP ALARM ANNUNCIATO	Cog Level:	C/ A 3.0
Source:	N	Exam:	VG05301
Test:	R	Author/Reviewer:	MAB/RSB

QUESTIONS REPORT
for Voglte 2005-301 Draft

1. 015/017G2.4.10 001

Unit 1 Operators were in the process of swapping to Main Feedwater Regulating Valves in accordance with 12004-C, Power Operation (Mode 1), when the following alarms annunciated:

ALB11
- ~~C1~~-F06, UNDERFREQUENCY RCP BUS ALERT
- ~~C1~~-E06, UNDERVOLTAGE RCP BUS ALERT
ACB11

Subsequently Operators note that Bus 1NAA was de-energized.

Which ONE of the following correctly states the status of the RCPs?

A. Only '~~A~~' (#1) and '~~B~~' (#2) RCPs trip.

B. Only '~~A~~' (#1) and '~~C~~' (#3) RCPs trip.

C. Only '~~B~~' (#2) and '~~D~~' (#4) RCPs trip.

D. All RCPs trip.

K/A
015/017 RCP Malfunctions
G2.4.10 Knowledge of annunciator response procedures.

K/A MATCH ANALYSIS
The RCP malfunction is a loss of power. Guidance is contained in C1-F06 that states that all four RCPs will trip if P-7 is made up. Therefore, the question tests knowledge in the ARPs related to an RCP malfunction.

ANSWER / DISTRACTOR ANALYSIS
A. Incorrect. Plausible because applicant may confuse which RCPs are powered by 1NAA.
B. Incorrect. Plausible because this would be correct if P-7 were not made up.
C. Incorrect. Plausible because applicant may confuse which RCPs are powered by 1NAA.
D. Correct. P-7 is made up because MFRV swap occurs between 16 and 20% RTP (P-7 logic is 2/4 NIs or 1/2 turb pwr > 10%). Therefore, according to 17011-1, 1C-F06, a trip of all RCPs will occur if Bus 1NAA is lost.

REFERENCES
1. 17011-1, Annunciator Response Procedures for ALB 11 on Panel 1C1 on MCB, Rev. 13, 08/01/03.
2. V-LO-TX-28101, RPS-SSPS-AMSAC, Rev. 3.0.
3. 12004-C, Power Operation (Mode 1), Rev. 64, 05/08/2004.

MCS	Time:	1	Points:	1.00	Version:	0 1 2 3 4 5 6 7 8 9	
					Answer:	D A B C C D C B B D	Scramble Range: A - D
Tier:		1			Group:	1	
Key Word:		RCP ALARM ANNUNCIATO			Cog Level:	C/ A 3.0	
Source:		N			Exam:	VG05301	
Test:		R			Author/Reviewer:	MAB/RSB	

WINDOW E06

ORIGIN	SETPOINT	UNDERVOLTAGE RCP BUS ALERT
1AAA 1BAB 1CAC 1DAD	70%	

1.0 PROBABLE CAUSE

1. Low Reactor Coolant Pump Bus voltage.

2. Reactor Coolant Pump Non 1E Breaker tripped.

2.0 AUTOMATIC ACTIONS

Reactor trip will occur due to undervoltage sensed in a Reactor Coolant Pump 1E Breaker on each 13.8KV bus if above 10 percent rated thermal power.

3.0 INITIAL OPERATOR ACTIONS

If a Reactor Coolant Pump(s) trip without a reactor trip, CHECK Reactor Power level:

a. If Reactor power is above 15%, TRIP Reactor and INITIATE 19000-C, "Reactor Trip Or Safety Injection",
b. If Reactor power is 15% or less, INITIATE 18005-C, "Partial Loss Of Flow".

WINDOW E06
(Continued)

4.0 SUBSEQUENT OPERATOR ACTIONS

4.1 If a Reactor Coolant Pump trip does not occur, INITIATE maintenance to correct cause of the alarm.

4.2 If it is necessary to trip the RCP Undervoltage channels, TRIP the channels by NOTIFYING I&C to perform the following to comply with Technical Specifications LCO 3.3.1:

a. REMOVE connecting plug from Undervoltage Timing relays (262R-A and 262R-B), and

b. INSTALL test plugs into Undervoltage Timing relays (262R-A and 262R-B).

4.3 Verify that the associated RCP BUS CH UNDERVOLT Trip Status Light is illuminated but not blinking.

4.4 When maintenance has been completed and when ready to return the RCP Undervoltage channels to service, NOTIFY I&C to remove test plugs and reinstall connecting plugs for Undervoltage Timing relays (262R-A and 262R-B). Independent Verification is required.

4.5 Verify that the associated RCP BUS CH UNDERVOLT Trip Status Light and annunciator E06 are not illuminated.

5.0 COMPENSATORY OPERATOR ACTIONS

NONE

END OF SUB-PROCEDURE

REFERENCES: 1X3D-BD-B01N, P, X, Y, 1X6AX01-289, 329, 1X6AA02-229, Technical Specifications LCO 3.3.1, 3.4.4, 3.4.5 and 3.4.6, PLS

WINDOW F06

ORIGIN	SETPOINT	
1AAA 1BAB 1CAC 1DAD	57.3 Hz	UNDERFREQUENCY RCP BUS ALERT

1.0 PROBABLE CAUSE

1. Reactor Coolant Pump Bus underfrequency.

2. Reactor Coolant Pump Non 1E breaker tripped.

2.0 AUTOMATIC ACTIONS

1. Affected Reactor Coolant Pump will trip.

2. If Underfrequency is due to loss of Bus 1NAA or 1NAB, and P-7 logic is made up, a reactor trip will occur, and all four RCPs will trip.

3.0 INITIAL OPERATOR ACTIONS

If a Reactor Coolant Pump(s) trip without a reactor trip, CHECK Reactor Power level:

a. If Reactor power is above 15%, TRIP Reactor and INITIATE 19000-C, "Reactor Trip Or Safety Injection",
b. If Reactor power is 15% or less, INITIATE 18005-C, "Partial Loss Of Flow".

WINDOW F06
(Continued)

4.0 SUBSEQUENT OPERATOR ACTIONS

4.1 If a Reactor Coolant Pump trip did not occur, INITIATE maintenance to correct cause of alarm.

4.2 If it is necessary to trip the RCP Underfrequency channels, TRIP the channels by NOTIFYING I&C to remove Underfrequency relays (281-A and 281-B) to comply with Technical Specifications LCO 3.3.1.

4.3 Verify that the associated RCP BUS CH UNDERFREQ Trip Status Light is illuminated but not blinking.

4.4 When maintenance has been completed and when ready to return the RCP Underfrequency channels to service, NOTIFY I & C to reinstall Underfrequency relays (281-A and 281-B). Independent Verification is required.

4.5 Verify that the associated RCP BUS CH UNDERFREQ Trip Status Light and annunciator F06 is not illuminated.

5.0 COMPENSATORY OPERATOR ACTIONS

NONE

END OF PROCEDURE TEXT

REFERENCES: 1X3D-BD-B01N, P, X, Y, 1X6AX01-289, 329, 1X6AA02-229, Technical Specifications LCO 3.3.1, 3.4.4, 3.4.5 and 3.4.6, PLS

INITIALS

1.24 At approximately 14% reactor power, PERFORM the following: (CO 156, CO 157)

a. CONTROL the Axial Flux Difference (AFD) near the Target Value. REFER to Section 4.3.2 for AFD control strategy and guidelines, (CO 3130, CO 1405, CO 3129, CO 4319) _____

b. SHIFT Recorder NR-45 to record one power range channel and one Delta Flux Channel, _____

Annotate chart to reflect channels selected,

CAUTION

Closing FV-4486 will change feedwater flow and could result in a feedwater transient.

4.1.25 At approximately 15% Reactor Power REDUCE the demand on FIC-4486 until 0% demand or 12,000 gpm total condensate flow is attained. Then continue with the power ascension. _____

4.1.26 Between 16 and 20% Reactor power, SWAP to the MFRVs as follows:

NOTES

a. MFRVs may leakby as the MFIV opens, SG levels should be monitored and feedwater flow adjusted to maintain SG levels.

b. All four MFIVs should be open prior to continuing with MFRV swaps.

a. OPEN the Main Feed Water Isolation Valves for all SGs one at a time, (CO 6829, CO 1705) {} {} {} {}

P-6 Resets:

When 2/2 IR NIS detector drop < **7.0 X 10-6% POWER**

P-7 **Lo Power Trip Block**

Also known as the "At power trip permissive"

Set points - either of the following

1) ≥ **10%** turbine power **1 / 2** Turbine Impulse Pressure (P-13)

   or

2) ≥ **10%** power on **2 / 4** Power Range NIS (P-10)

Functions:

Unblocks at power trips

1) Pressurizer low pressure
2) Pressurizer hi level
3) RCP undervoltage
4) RCP underfrequency
5) Two loop loss of flow trip

Permissive status light on BPLP goes out when P-7 is present

P-8 **1 Loop Lo Flow Trip Block**

Set points:

2 / 4 Power Range NIS ≥ **48%** power

P-9 **Turbine Trip / Reactor Trip Blocked**

Set points:

2 / 4 Power Range NIS ≥ **50%** power

Function:

Enables reactor trip when the main turbine trips because of the steam dumps and auto rod control capacity is limited to 50%.

Permissive status light on BPLP goes out when P-9 is present

P-10 **Power Range Permissive**

Set point:

2 / 4 PR NIS ≥ 10% power (resets at 8%)

Functions:

1) Automatically blocks SR hi flux trip
2) Allows manual block of IR high flux trip and rod stop (both TR A and TR B switches to block)
3) Allows manual block of PR high flux trip (low set point) requires both Trn A and Trn B switches to block both trains
4) Provides input for P-7

Permissive status light comes on with P-10 present

P-11 **Pressurizer Lo Pressure SI Block Permissive**

Set point:

2 / 3 pressurizer pressure channels ≤ 2000 psig

PT-458 not used

Function:

1) Allows manual block of pressurizer low pressure SI (Requires Both TR A and TR B switches to block)

2) Allows manual block of low steam line pressure SI and steam line isolation. This manual block will enable a steam line isolation upon receipt of high steam pressure negative rate signal. (Requires both Train A and B switches to block)

3) Loss of P-11 will send signal to unblock PRZR pressure SI & Low Steam Line Pressure SI/MSLI. Loss of P-11 will also block the MSLI from high steam Negative rate signal.

4) Loss of P-11 sends an open signal to the SI Accumulator outlet valves.

5) Loss of P-11 enables Alarms for Accumulator outlet valves, and SI pump suction valve "Not Full open"

Permissive status light will be <u>on</u> when P-11 present

P-12 **Low-Low Tavg Steam Dump Interlock**

Set point:

2 / 4 Tavg channels ≤ 550°F

Function:

Auto closes the steam dumps (The block can be overridden for 3 of the 12 steam dumps to be used for plant cool down.)

Permissive status light on BPLP goes out when P-12 is present.

P-13 **Lo Turbine Impulse Pressure Permissive**

Set point:

1 / 2 turbine impulse pressure channels
PT-505, PT-506 indicating ≥ 10% turbine power

Function:

Provides input to P-7 (back up to power range P-10 input)

Permissive status light on BPLP goes out when P-13 is present.

P-14 **High-High steam generator level**

Set point:

2 / 4 level indications on **1 / 4** steam generators
≥ **86%** NR

Functions:

1) Turbine trip
2) Full feed water isolation (trips both SGFP Turbines and isolates FW to S/G's)
3) Prevents carryover of water to turbine Generator and SGFP turbines

20. 017K3.01 001

Given the following Unit 2 conditions:

- A small break loss of coolant accident has occurred
- All reactor coolant pumps have been tripped
- Natural circulation is believed to be established

Core Exit Thermocouples (CETC) system readouts have failed.

- Pressurizer pressure channel PT-455 indicates 1725 psig
- Pressurizer pressure channel PT-457 indicates 1735 psig
- RCS pressure PT-408 and 418 indicate 1690 psig
- RCS pressure PT-428 and 438 indicate 1685 psig

RCS Hot and Cold Leg Wide Range Temperatures indicate as follows:

	Loop 1	Loop 2	Loop 3	Loop 4
Thot	540	550	560	555
Tcold	533	543	553	550

Which ONE of the following temperature values (in degrees F) will be the correct amount of subcooling when using RTDs?

A. 53

B. 56

C. 57

D. 60

K/A
017 In-core Temperature Monitor
K3.01 Knowledge of the effect that a loss or malfunction of the ITM system will have on the following: Natural circulation indications.

K/A MATCH ANALYSIS
Question tests the knowledge of alternate indications of subcooling that are available if the CETCs are inoperable. NC has been established, therefore the WR instruments should provide an alternate indication.

ANSWER / DISTRACTOR ANALYSIS
A. Correct. Used Tsat for lowest pressure (1685 psig = 1700 psia corresponds to 613 F) and subtracted highest Thot (613 - 560 = 53 F).
B. Incorrect. Used lowest Pzr P (1725 psig = 1740 psia corresponds to 616 F) and subtracted highest Thot (616 - 560 = 56 F)
C. Incorrect. Used highest pressure (1735 psig + 15 psi = 1750 psia) for Tsat and subtracted highest Thot (617 - 560 = 57F).
D. Incorrect. Subtracted highest Tcold (613 - 553 = 60F).

REFERENCES
1. Tech Spec Basis 3.3.3 Pages B 3.3.3-4 through B 3.3.3.-6)
2. Farley Exam FA01301, Question 017K3.01.

MCS	Time:	1	Points:	1.00	Version:	0 1 2 3 4 5 6 7 8 9	
					Answer:	A C D B D B A B D B	Scramble Range: A - D
Tier:		2			Group:	2	
Key Word:		CETC NATURAL CIRC			Cog Level:	C/A 3.5	
Source:		B			Exam:	VG05301	
Test:		R			Author/Reviewer:	MAB/RSB	

20. 017K3.01 001

Given the following Unit 2 conditions:

- A small break loss of coolant accident has occurred
- All reactor coolant pumps have been tripped
- Natural circulation is believed to be established

Core Exit Thermocouples (CETC) system readouts have failed.

- Pressurizer pressure channel PT-455 indicates 1725 psig
- Pressurizer pressure channel PT-457 indicates 1735 psig
- RCS pressure PT-408 and 418 indicate 1690 psig
- RCS pressure PT-428 and 438 indicate 1685 psig

RCS Hot and Cold Leg Wide Range Temperatures indicate as follows:

	Loop 1	Loop 2	Loop 3	Loop 4
Thot	540	550	560	555
Tcold	533	543	553	550

Which ONE of the following temperature values (in degrees F) will be the correct amount of subcooling when using RTDs?

A. 53

B. 56

C. 57

D. 60

K/A
017 In-core Temperature Monitor
K3.01 Knowledge of the effect that a loss or malfunction of the ITM system will have on the following: Natural circulation indications.

K/A MATCH ANALYSIS
Question tests the knowledge of alternate indications of subcooling that are available if the CETCs are inoperable. NC has been established, therefore the WR instruments should provide an alternate indication.

ANSWER / DISTRACTOR ANALYSIS
A. Correct. Used Tsat for lowest pressure (1685 psig = 1700 psia corresponds to 613 F) and subtracted highest Thot (613 - 560 = 53 F).
B. Incorrect. Used lowest Pzr P (1725 psig = 1740 psia corresponds to 616 F) and subtracted highest Thot (616 - 560 = 56 F)
C. Incorrect. Used highest pressure (1735 psig + 15 psi = 1750 psia) for Tsat and subtracted highest Thot (617 - 560 = 57F).
D. Incorrect. Subtracted highest Tcold (613 - 553 = 60F).

REFERENCES
1. Tech Spec Basis 3.3.3 Pages B 3.3.3-4 through B 3.3.3.-6)
2. Farley Exam FA01301, Question 017K3.01.

MCS	Time:	1	Points:	1.00	Version:	0 1 2 3 4 5 6 7 8 9	
					Answer:	A C D B D B A B D B	Scramble Range: A - D
Tier:		2			Group:	2	
Key Word:		CETC NATURAL CIRC			Cog Level:	C/A 3.5	
Source:		B			Exam:	VG05301	
Test:		R			Author/Reviewer:	MAB/RSB	

2. 017K3.01 001

Given the following Unit 2 conditions:

- A small break loss of coolant accident has occurred
- All reactor coolant pumps have been tripped
- Natural circulation is believed to be established

Core Exit Thermocouples (CETC) system readouts have failed.

- Pressurizer pressure channel PT-455 indicates 1725 psig
- Pressurizer pressure channel PT-457 indicates 1735 psig
- RCS pressure PT-408 and 418 indicate 1690 psig
- RCS pressure PT-428 and 438 indicate 1685 psig

RCS Hot and Cold Leg Wide Range Temperatures indicate as follows:

	Loop 1	Loop 2	Loop 3	Loop 4
Thot	540	550	560	555
Tcold	533	543	553	550

Which ONE of the following temperature values (in degrees F) will be displayed on the Subcooled Margin Monitor when using RTDs to calculate subcooling?

A. 60

B. 57

C. 53

D. 56

numerical order.

which OOTT is the correct subcooling value.

K/A
017 In-core Temperature Monitor
K3.01 Knowledge of the effect that a loss or malfunction of the ITM system will have on the following: Natural circulation indications.

K/A MATCH ANALYSIS
Question tests the knowledge of alternate indications of subcooling that are available if the CETCs are inoperable. NC has been established, therefore the WR instruments should provide an alternate indication.

ANSWER / DISTRACTOR ANALYSIS
A. Incorrect. Subtracted highest Tcold (613 - 553 = 60F).
B. Incorrect. Used highest pressure (1735 psig + 15 psi = 1750 psia) for Tsat and subtracted highest Thot (617 - 560 = 57F).
C. Correct. Used Tsat for lowest pressure (1685 psig = 1700 psia corresponds to 613 F) and subtracted highest Thot (613 - 560 = 53 F).
D. Incorrect. Used lowest Pzr P (1725 psig = 1740 psia corresponds to 616 F) and subtracted highest Thot (616 - 560 = 56 F)

REFERENCES
1. Tech Spec Basis 3.3.3 Pages B 3.3.3-4 through B 3.3.3.-6)
2. Farley Exam FA01301, Question 017K3.01.

MCS	Time:	1	Points:	1.00	Version:	0 1 2 3 4 5 6 7 8 9	
					Answer:	C A A D A B C A B C	Scramble Range: A - D
Tier:		2			Group:	2	
Key Word:		CETC NATURAL CIRC			Cog Level:	C/A 3.5	
Source:		B			Exam:	VG05301	
Test:		R			Author/Reviewer:	MAB/RSB	

017K3.01

QUESTIONS REPORT
for Westinghouse 3 Loop Questions

1. 017K3.01 001

Given the following plant conditions:

- A small break Loss Of Coolant Accident (LOCA) has occurred.
- ALL RCPs have been manually tripped.
- Natural Circulation is believed to be established.

Core Exit Termocouples (CETC) system readouts have failed.

- Pressurizer pressure channel 'A', PT-455, indicates 1725 psig. } Control Channels
- Pressurizer pressure channel 'B', PT-457, indicates 1735 psig. }
- RCS pressure PT-402 indicates 1690 psig. PT-408 = 1690 psig } WR Pressure
- RCS pressure PT-403 indicates 1685 psig. PT-418 = 1685 psig } TS Basis 3.3.3
- RTD temperatures (degrees F) as follows:

RCS HAC by WR Temps

	Loop 1	Loop 2	Loop 3	Loop 4
Thot	540	550	560	555
Tcold	533	543	553	550

Which ONE of the following temperature values (in degrees F) will be displayed on the Subcooled Margin Monitor when selected to the "RTD" mode?

(NOTE: Steam tables are provided as a reference.)

A. 60.

B. 57.

C. 53.

D. ~~73.~~ 56 Use lowest Pcs P and highest Thot

A - Incorrect, Subtracted the highest Tcold RTD (613-553=60F).
B - Incorrect, Used highest pressure (1735psig+15psi=1750psia and Tsat is 617F) for Tsat and subtracted highest RTD (617-560=57F).
C - Correct, Calculated using Tsat for the lowest pressure (1685 psig+15 psi=1700 psia and Tsat is 613 F) MINUS hottest temperature RCS RTD (613-560=53F).
D - Incorrect, Subtracted the lowest Thot RTD (613-540=73F).
Source: New

RO Tier:	T2G1	SRO Tier:	
K/A Value:	3.5/3.7	Cog. Level:	C/A
Source:	NEW	Exam:	FA01301
Test:	R (21)	Misc:	SDR

BASES

LCO (continued)

Table 3.3.3-1 lists all Type A and Category I variables identified by the unit specific Regulatory Guide 1.97 analyses, as amended by the NRC's SER.

Type A and Category I variables are required to meet Regulatory Guide 1.97 Category I (Ref. 2) design and qualification requirements for seismic and environmental qualification, single failure criterion, utilization of emergency standby power, immediately accessible display, continuous readout, and recording of display.

Listed below are discussions of the specified instrument Functions listed in Table 3.3.3-1.

1. Reactor Coolant System Pressure (Wide Range)

RCS wide range pressure (LOOP 408, 418, 428, and 438) is a Category I Type A variable provided for verification of core cooling and RCS integrity long term surveillance.

RCS pressure is used to verify delivery of SI flow to RCS from at least one train when the RCS pressure is below the pump shutoff head. RCS pressure is also used to verify closure of manually closed spray line valves and pressurizer power operated relief valves (PORVs).

In addition to these verifications, RCS pressure is used for determining RCS subcooling margin. RCS subcooling margin will allow termination of SI, if still in progress, or reinitiation of SI if it has been stopped. RCS pressure can also be used:

- to determine whether to terminate actuated SI or to reinitiate stopped SI;
- to determine when to reset SI and shut off low head SI;
- to manually restart low head SI;
- as reactor coolant pump (RCP) trip criteria; and

(continued)

BASES

LCO

1. Reactor Coolant System Pressure (Wide Range) (continued)

- to make a determination on the nature of the accident in progress and where to go next in the procedure.

RCS subcooling margin is also used for unit stabilization and cooldown control.

RCS pressure is also related to three decisions about depressurization. They are:

- to determine whether to proceed with primary system depressurization;
- to verify termination of depressurization; and
- to determine whether to close accumulator isolation valves during a controlled cooldown/depressurization.

A final use of RCS pressure is to determine whether to operate the pressurizer heaters.

RCS pressure is also a Type A variable because the operator uses this indication to monitor the cooldown of the RCS following a steam generator tube rupture (SGTR) or small break LOCA. Operator actions to maintain a controlled cooldown, such as adjusting steam generator (SG) pressure or level, would use this indication. Furthermore, RCS pressure is one factor that may be used in decisions to terminate RCP operation.

2.3. Reactor Coolant System (RCS) Hot and Cold Leg Temperatures (Wide Range)

(Hot Leg Loops 413A, 423A, 433A, & 443A)
(Cold Leg Loops 413B, 423B, 433B, & 443B)

RCS Hot and Cold Leg Temperatures are Category I, Type A variables provided for verification of core cooling and long term surveillance.

(continued)

BASES

LCO

2,3. Reactor Coolant System (RCS) Hot and Cold Leg Temperatures (Wide Range) (continued)

RCS hot and cold leg temperatures are used to determine RCS subcooling margin. RCS subcooling margin will allow termination of safety injection (SI), if still in progress, or reinitiation of SI if it has been stopped. RCS subcooling margin is also used for unit stabilization and cooldown control.

In addition, RCS cold leg temperature is used in conjunction with RCS hot leg temperature to verify the unit conditions necessary to establish natural circulation in the RCS.

Reactor outlet temperature inputs to the Reactor Protection System are provided by two fast response resistance elements and associated transmitters in each loop. The channels provide indication over a range of 50°F to 700°F.

The core exit thermocouples provide diverse indication for the RCS hot leg temperature.

Steam line pressure provides diverse indication for the RCS cold leg temperature.

4. Steam Generator Water Level (Wide Range)

Wide range SG water level (Loops 501, 502, 503, & 504) is a Type A variable used to determine if an adequate heat sink is being maintained through the SGs for decay heat removal, primarily for the response to a loss of secondary heat sink event when the level is below the narrow range. The wide range SG level indication may also be used in conjunction with auxiliary feedwater flow for SI termination. In addition, the wide range level is cold calibrated and provides a complete range for monitoring SG level during a cooldown. Auxiliary feedwater flow provides the diverse indication for wide range SG water level.

(continued)

21. 022K2.01 001

All containment cooling fan controls are in their normal at power configuration.

Which ONE of the following correctly describes the response of the Train "A" containment fan coolers following a loss of offsite power with an "A" Train safety injection present?

(assume sequencer starts at 0 seconds)

A. At 30.5 seconds 2 fans start in high speed and at 50.5 seconds 2 fans start in high speed.

B. At 30.5 seconds 2 fans start in low speed and at 50.5 seconds 2 fans start in low speed.

C. At 30.5 seconds 4 fans start in high speed.

D✓ At 30.5 seconds 4 fans start in low speed.

K/A
022 Containment Cooling
K2.01 Knowledge of power supplies to the following: Containment cooling fans.

K/A MATCH ANALYSIS
The sequencer controls the bus loading when the EDGs are called upon. The sequencer is designed to prevent voltage drops and/or fluctuations due to loads on a particular safety bus. This question tests knowledge of the sequencer, hence it tests knowledge of the power supplies.

ANSWER / DISTRACTOR ANALYSIS
A. Incorrect. All fans start at 30.5 sec. Plausible because this would be correct if no SI present.
B. Incorrect. Plausible for same reason as "A" with exception of slow speed.
C. Incorrect. Fans start in slow speed with an SI present. Plausible because all fans start at 30.5 sec.
D. Correct. See Page 17 of referenced lesson plan.

REFERENCES
1. Vogtle test question LO-LP-29130-01-05.
2. Vogtle test question LO-LP-29130-02-01.
3. V-LO-TX-29101, Containment HVAC Systems.

MCS Time: 1 Points: 1.00 Version: 0 1 2 3 4 5 6 7 8 9
Answer: D B C B B D A D B D Scramble Range: A - D

QUESTIONS REPORT
for Voglte 2005-301 Draft

Tier:	2	Group:	1
Key Word:	CONTAINNENT COOLING	Cog Level:	MEM 3.0
Source:	B	Exam:	VG05301
Test:	R	Author/Reviewer:	MAB/RSB

21. 022K2.01 001

All containment cooling fan controls are in their normal at power configuration.

Which ONE of the following correctly describes the response of containment fan coolers following a loss of offsite power with an "A" Train safety injection present?

(assume sequencer starts at 0 seconds)

A. At 30.5 seconds 2 fans start in high speed and at 50.5 seconds 2 fans start in high speed.

B. At 30.5 seconds 2 fans start in low speed and at 50.5 seconds 2 fans start in low speed.

C. At 30.5 seconds 4 fans start in high speed.

D. At 30.5 seconds 4 fans start in low speed.

K/A
022 Containment Cooling
K2.01 Knowledge of power supplies to the following: Containment cooling fans.

K/A MATCH ANALYSIS
The sequencer controls the bus loading when the EDGs are called upon. The sequencer is designed to prevent voltage drops and/or fluctuations due to loads on a particular safety bus. This question tests knowledge of the sequencer, hence it tests knowledge of the power supplies.

ANSWER / DISTRACTOR ANALYSIS
A. Incorrect. All fans start at 30.5 sec. Plausible because this would be correct if no SI present.
B. Incorrect. Plausible for same reason as "A" with exception of slow speed.
C. Incorrect. Fans start in slow speed with an SI present. Plausible because all fans start at 30.5 sec.
D. Correct. See Page 17 of referenced lesson plan.

REFERENCES
1. Vogtle test question LO-LP-29130-01-05.
2. Vogtle test question LO-LP-29130-02-01.
3. V-LO-TX-29101, Containment HVAC Systems.

MCS Time: 1 Points: 1.00 Version: 0 1 2 3 4 5 6 7 8 9
Answer: D B C B B D A D B D Scramble Range: A - D

QUESTIONS REPORT
for Voglte 2005-301 Draft

Tier:	2	Group:	1
Key Word:	CONTAINNENT COOLING	Cog Level:	MEM 3.0
Source:	B	Exam:	VG05301
Test:	R	Author/Reviewer:	MAB/RSB

QUESTIONS REPORT
for Voglte 2005-301 Draft

1. 022K2.01 001

~~All containment cooling fan control switches are in AUTO and transfer switches are set to the CONTROL ROOM position.~~ change to "In their normal at power configuration"

Which ONE of the following correctly describes the response of containment fan coolers following a loss of offsite power with an "A" Train safety injection present?

(assume sequencer starts at 0 seconds)

A. At 30.5 seconds 2 fans start in high speed and at 50.5 seconds 2 fans start in high speed.

B. At 30.5 seconds 2 fans start in low speed and at 50.5 seconds 2 fans start in low speed.

C. At 30.5 seconds 4 fans start in high speed.

D. At 30.5 seconds 4 fans start in low speed.

K/A
022 Containment Cooling
K2.01 Knowledge of power supplies to the following: Containment cooling fans.

K/A MATCH ANALYSIS
The sequencer controls the bus loading when the EDGs are called upon. The sequencer is designed to prevent voltage drops and/or fluctuations due to loads on a particular safety bus. This question tests knowledge of the sequencer, hence it tests knowledge of the power supplies.

ANSWER / DISTRACTOR ANALYSIS
A. Incorrect. All fans start at 30.5 sec. Plausible because this would be correct if no SI present.
B. Incorrect. Plausible for same reason as "A" with exception of slow speed.
C. Incorrect. Fans start in slow speed with an SI present. Plausible because all fans start at 30.5 sec.
D. Correct. See Page 17 of referenced lesson plan.

REFERENCES
1. Vogtle test question LO-LP-29130-01-05.
2. Vogtle test question LO-LP-29130-02-01.
3. V-LO-TX-29101, Containment HVAC Systems.

MCS Time: 1 Points: 1.00 Version: 0 1 2 3 4 5 6 7 8 9
Answer: D B C B B D A D B D Scramble Range: A - D

QUESTIONS REPORT

for Voglte 2005-301 Draft

Tier:	2	Group:	1
Key Word:	CONTAINNENT COOLING	Cog Level:	MEM 3.0
Source:	B	Exam:	VG05301
Test:	R	Author/Reviewer:	MAB/RSB

The Containment Coolers have hand switch controls on the QHVC panel and their respective Remote shutdown panels. There are separate hand switch controls for the low and high speed fans in both locations. On the QMCB, there are supply and return flow indicators for each pair of coolers. There are also hand switch controls for the NSCW supply and return MOVs on the QMCB. There are status lights on the monitor light boxes (MLBs) for the Containment Cooler low speed operation, and for the NSCW MOVs.
There are cooler low flow alarms for each pair of coolers on ALB02 and ALB03.

Control Functions and Interlocks

The fans may be manually started from the control room in either high or low speed. The high and low speed controls are interlocked so only one speed may be energized. The fans must be run in pairs in specific combinations as outlined in the procedure to allow for even cooling and prevent backflow through idle fans.

On a loss of offsite power, the fans in auto will be started in high speed. The Sequencer gives all fans a start signal at 30.5 secs, but delay timer delays the start of two fans by 20 seconds to prevent voltage swings on the 4160VAC 1E busses.

On an SI signal, SSPS and the sequencer will trip off any fans running in High speed and the SI sequence will restart the fans in low speed. All fans start at 30.5 secs.

On an SI signal, SSPS will send an open signal to the NSCW supply and return MOVs. The NSCW supply and return MOVs are normally maintained open.

Containment Aux Coolers System 1515

Controls and Instrumentation

The Containment Aux Coolers have hand switch controls on the QHVC panel. There Hand switches on the QMCB for the NSCW supply and return MOVs. There is no instrument indicators provided for this system. There are individual fan low flow alarms on ALB 052.

Control Functions and Interlocks

The CNMT Aux coolers will auto trip on low flow after a time delay. The same flow switch that trips the fan also drives the alarm. All other operations are manual.

The MOVs provided on the supply and return lines to the Aux cooler/Reactor Cavity cooler automatically isolate NSCW on an SI signal.

Containment Lower Level Circulation System 1503

LO-LP-29130-02-01
Which of the following best describes the response of the Containment cooling fans following an SI actuation by Train "A" SSPS. Assume all control switches in auto and transfer switches set to Control Room. Upon receipt of the sequencer start signal:

A. Eight Containment Cooling Unit fans start in low speed.

B. Four Containment Cooling Unit fans start in low speed.

C. Two Containment Cooling Unit fans start in low speed, then after a short time delay, two more start in low speed.

D. Two Containment Cooling Unit fans start in hi speed, then after a short time delay, two more start in hi Speed.

LO-LP-29130-02
State all auto start signals for the containment cooling fans including setpoints and coincidence, where applicable

LO-LP-29130-01-05
Following a LOSP, the response of the containment fan coolers (assuming LOSP sequencer start = 0 seconds) is:

A. Start of 4 fans at 30.5 seconds (4 Train "A"), start of 4 fans at 50.5 seconds (4 Train "B"), high speed.

B. Start of all 8 fans (4 Train "A", 4 Train "B"), at 30.5 seconds, low speed.

C. Start of only those fans running before the LOSP at 30.5 seconds, high speed.

D. Start of 4 fans at 30.5 seconds (2 Train "A", 2 Train "B"), start of 4 fans at 50.5 seconds (2 Train "A", 2 Train "B"), high speed.

LO-LP-29130-01
State why two speeds are provided for the containment fan coolers and when each speed is used.

22. 022K4.01 001

Which ONE of the following groups of components are ALL designed to be directly cooled by the Nuclear Service Cooling Water System?

A. AFW pump motor cooler, CCW heat exchangers, EDG jacket water cooler, containment auxiliary cooler.

B. Spent fuel cooling pump motor cooler, ACCW heat exchangers, seismic fire hose stations, CCW pump motor cooler.

C. Control building ESF chillers, containment coolers, RHR pump motor cooler, piping area penetration cooler.

D. Containment spray pump motor cooler, SI pump oil cooler and motor cooler, Charging pump oil and motor cooler, EDG lube oil heat exchanger.

K/A
022 Containment Cooling
K4.01 Knowledge of CCS design feature(s) and / or interlock(s) which provide for the following: Cooling of containment penetrations.

K/A MATCH ANALYSIS
One of the design features of the piping penetration is that it is cooled by the Nuclear Service Cooling Water system.

ANSWER / DISTRACTOR ANALYSIS
A. Incorrect. AFW pump motor cooler is not cooled by NSCW. Plausible because the other loads are cooled by NSCW.
B. Incorrect. Spent fuel pool cooling pump motor cooler is not cooled by NSCW. Plausible because the other loads are cooled by NSCW.
C. Correct. See V-LO-TX-06101, Pages 9 and 10.
D. Incorrect. EDG lube oil heat exchanger is not cooled by NSCW. Plausible because the other loads are cooled by NSCW.

MCS Time: 1 Points: 1.00 Version: 0 1 2 3 4 5 6 7 8 9
Answer: C C A D C A C D C A Scramble Range: A - D

Tier:	2	Group:	1
Key Word:	PENETRATION COOLING	Cog Level:	MEM 2.5
Source:	B	Exam:	VG05301
Test:	R	Author/Reviewer:	MAB/RSB

22. 022K4.01 001

Which ONE of the following groups of components are ALL designed to be directly cooled by the Nuclear Service Cooling Water System?

A. AFW pump motor cooler, CCW heat exchangers, EDG jacket water cooler, containment auxiliary cooler.

B. Spent fuel cooling pump motor cooler, ACCW heat exchangers, seismic fire hose stations, CCW pump motor cooler.

C. Control building ESF chillers, containment coolers, RHR pump motor cooler, piping area penetration cooler.

D. Containment spray pump motor cooler, SI pump oil cooler and motor cooler, Charging pump oil and motor cooler, EDG lube oil heat exchanger.

K/A
022 Containment Cooling
K4.01 Knowledge of CCS design feature(s) and / or interlock(s) which provide for the following: Cooling of containment penetrations.

K/A MATCH ANALYSIS
One of the design features of the piping penetration is that it is cooled by the Nuclear Service Cooling Water system.

ANSWER / DISTRACTOR ANALYSIS
A. Incorrect. AFW pump motor cooler is not cooled by NSCW. Plausible because the other loads are cooled by NSCW.
B. Incorrect. Spent fuel pool cooling pump motor cooler is not cooled by NSCW. Plausible because the other loads are cooled by NSCW.
C. Correct. See V-LO-TX-06101, Pages 9 and 10.
D. Incorrect. EDG lube oil heat exchanger is not cooled by NSCW. Plausible because the other loads are cooled by NSCW.

MCS Time: 1 Points: 1.00 Version: 0 1 2 3 4 5 6 7 8 9
Answer: C C A D C A C D C A Scramble Range: A - D

Tier:	2	Group:	1
Key Word:	PENETRATION COOLING	Cog Level:	MEM 2.5
Source:	B	Exam:	VG05301
Test:	R	Author/Reviewer:	MAB/RSB

QUESTIONS REPORT
for Voglte 2005-301 Draft

1. 022K4.01 001

directly

Which ONE of the following groups of components are ALL designed to be cooled by the Nuclear Service Cooling Water System?

A. AFW pump motor cooler, CCW heat exchangers, EDG jacket water cooler, containment ~~normal~~ auxiliary cooler.

B. Spent fuel cooling pump motor cooler, ACCW heat exchangers, seismic fire hose stations, CCW pump motor cooler.

C. Control building ESF chillers, containment ~~emergency~~ coolers, RHR pump motor cooler, piping area penetration cooler.

D. Containment spray pump motor cooler, SI pump oil cooler and motor cooler, Charging pump oil and motor cooler, EDG lube oil heat exchanger.

Indirectly cooled by NSCW.

K/A
022 Containment Cooling
K4.01 Knowledge of CCS design feature(s) and / or interlock(s) which provide for the following: Cooling of containment penetrations.

K/A MATCH ANALYSIS
One of the design features of the piping penetration is that it is cooled by the Nuclear Service Cooling Water system.

ANSWER / DISTRACTOR ANALYSIS
A. Incorrect. AFW pump motor cooler is not cooled by NSCW. Plausible because the other loads are cooled by NSCW.
B. Incorrect. Spent fuel pool cooling pump motor cooler is not cooled by NSCW. Plausible because the other loads are cooled by NSCW.
C. Correct. See V-LO-TX-06101, Pages 9 and 10.
D. Incorrect. EDG lube oil heat exchanger is not cooled by NSCW. Plausible because the other loads are cooled by NSCW.

MCS Time: 1 Points: 1.00 Version: 0 1 2 3 4 5 6 7 8 9
Answer: C C A D C A C D C A Scramble Range: A - D

Tier:	2	Group:	1
Key Word:	PENETRATION COOLING	Cog Level:	MEM 2.5
Source:	B	Exam:	VG05301
Test:	R	Author/Reviewer:	MAB/RSB

LO-LP-06101-01-03
Which of the following groups of components are all cooled or supplied by the Nuclear Service Cooling Water (NSCW) System?

a. AFW pump motor cooler, CCW heat exchangers, EDG jacket water cooler, containment normal coolers

b. Spent fuel cooling pump motor cooler, ACCW heat exchangers, seismic fire hose stations, CCW pump motor cooler

c. **Control building ESF chillers, containment emergency coolers, RHR pump motor cooler, piping area penetration cooler** → Replace with Reactor Cavity Cooling Coil

d. Containment spray pump motor cooler, SI pump oil cooler and motor cooler, Charging pump oil cooler and motor cooler, EDG lube oil heat exchanger

LO-LP-06101-01
Describe the NSCW flowpath and identify all systems/components cooled by NSCW.

LO-LP-06101-01-04
Which of the following groups of components are all cooled or supplied by the Nuclear Service Cooling Water (NSCW) System?

a. AFW pump motor cooler, CCW heat exchangers, DG jacket water cooler, containment normal coolers

b. Spent fuel cooling pump motor cooler, ACCW heat exchangers, seismic fire hose stations, CCW pump motor cooler

c. Diesel fire pump oil cooler, containment emergency coolers, RHR pump motor cooler, piping area penetration cooler

d. Containment spray pump motor cooler, SI pump oil cooler and motor cooler, Charging pump oil cooler and motor cooler, control building ESF chiller

LO-LP-06101-01
Describe the NSCW flowpath and identify all systems/components cooled by NSCW.

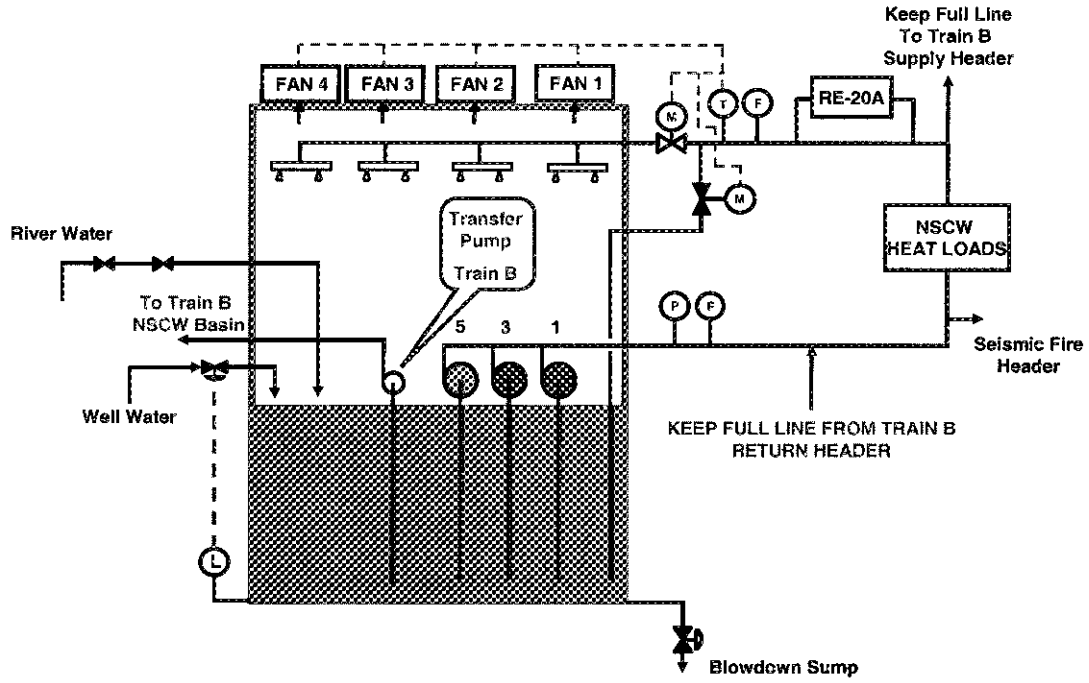

NSCW TRAIN A

6.2 MAJOR FLOW PATHS

Each NSCW pump discharges through its own motor-operated discharge valve. Each discharge valve has a small 4-inch bypass line around it. The discharge valve and bypass line have specific functions to prevent water hammer during startup of the system. This will be discussed in detail later. The discharge from the three NSCW pumps combines into a common discharge header. The discharge header leaves the NSCW cooling tower structure through an underground tunnel. Tapping off of the discharge header is a three-inch pipe in which blow down flow can be removed from the NSCW System. The blow down flow is directed to the blow down sump and ultimately to the Savannah River. Blow down is used to control conductivity, and experience at Plant Vogtle has been that it is required infrequently.

The discharge header then splits into several branch headers to supply the NSCW-served components. The following components are served per train of NSCW:

- 3 CCW motor coolers
- 1 Centrifugal charging pump oil cooler and motor cooler
- 1 Safety injection pump oil cooler and motor cooler
- 1 Containment spray motor cooler
- 1 RHR pump motor cooler
- 1 ESF chiller condenser
- 4 Containment coolers

- 1 Reactor cavity cooling coil
- 1 Containment auxiliary air cooler
- 1 Diesel generator jacket water cooler
- Control building, auxiliary building, and diesel building seismic fire hose stations
- 1 CCW heat exchanger
- 1 ACCW heat exchanger
- 1 piping penetration area cooler

After removing heat from the components that it serves, NSCW combines in a common return header. Prior to the return header entering the NSCW cooling tower structure, a radiation element samples the return water. This is done to detect any in-leakage that may occur in the NSCW System from the radioactive components it cools. The NSCW System is designed such that the operating pressure of the system is higher than the system that it services. Consequently, no in-leakage is expected as any boundary leakage would be from the NSCW System to the other system.

There is a return valve located in the return header (also known as the *spray* valve) that is designed for temperature control of the NSCW system. The return valve operates in conjunction with a tower bypass valve. In cold weather conditions when return header temperature falls to approximately 65 degrees F, the bypass valve will open and the return valve will close. When the bypass valve is open, the tower's four spray cells are completely bypassed (no water falls through the tower). The bypassing of the cooling tower and recirculation of NSCW within the system raises the temperature of NSCW. When temperature returns to 75 degrees F, the return isolation valve opens and the bypass valve closes. The normal flowpath is, thus, re-established to the top of the NSCW tower, where the water falls through the spray cells. Note that the water can only be directed to fall through all four cells at once, or no cells.

NSCW enters the cooling tower and splits into four headers that run to the top of each tower's spray 4 cells. Each header supplies distribution pipes in the top of the tower which have spray nozzles on the bottom of the pipes. NSCW is sprayed out of the nozzles, dispersing the water which is allowed to fall downward. The dispersed water comes into contact with the fill section which consists of thousands of asbestos panels which are vertically positioned. Each panel is separated by a small distance from the next panel. As the NSCW water comes into contact with the fill section, the NSCW forms thin layers of water on the panels as it passes down the fill section. The water then falls to and collects in the cooling tower basin.

Four fans in the top of each cooling tower pull outside air through windows in the side of the cooling tower, through the interior of the cooling tower, and out the top of the tower to the surrounding atmosphere. This is where and when the significant heat transfer from NSCW to the environment takes place.

C.AUXILIARY BUILDING/FUEL HANDLING BUILDING HVAC SYSTEMS

I. INTRODUCTION

The Auxiliary Building (Aux BLDG) Normal HVAC System provides an environment suitable for equipment operation and maintenance personnel. There is a system for normal operation and for emergency operation (where it is required) as follows:

Normal operation ---------- Auxiliary BLDG HVAC
Emergency operation ---------- Piping Penetration Filtration and Exhuast System

The Fuel Handling Building (FHB) HVAC Systems maintains the habitability of the FHB for equipment and personnel, and prevents outleakage of contaminated air following a fuel handling accident. There is a system for normal operation and for emergency operation as follows:

Normal operation ---------- FHB Normal HVAC System
Emergency operation -------- FHB Post-Accident Exhaust System

II. SYSTEM FLOWPATHS/COMPONENTS

AUX BLDG HVAC

Aux Bldg Normal HVAC

The Normal Auxiliary Building HVAC system is design to provide temperature and control of airborne radioactivity. The normal ventilation maintains a negative pressure on the building to prevent the release of radioactivity to the environment. The system consist of two supply units and three exhaust units. The supply units are provided cooling coils in which normal chilled water is circulated through to provide building cooling and electric heating coils for warmth.

Piping Penetration Filtration and Exhaust System

The Piping Penetration Area Filtration and Exhaust System maintains a negative pressure on the piping penetration area, and filters the exhaust from this area to prevent the release of radioactivity to the environment during accident conditions.

The penetration areas supplied and/or exhausted include the following:

a. Level 1: Valve galleries and Heat Exchanger rooms

b. Level A: Valve galleries piping penetration rooms, corridors, etc.

c Level B: Valve galleries, piping penetration rooms, Heat Exchanger rooms, etc., including Safety Injection pump rooms

d. Level C: CVCS Charging Pump rooms and valve galleries, SWGR rooms, Heat Exchanger rooms, pipe penetration rooms, etc.

e. Level D: Pump rooms, SWGR rooms, piping penetration rooms, etc., including RHR and CNMT spray pump rooms, and 1E SWGR room

The Engineered Safety Features Room Coolers provide cooling to Auxiliary Building ESF equipment rooms during abnormal, accident, and post-accident conditions. The ESF room cooler supplements the Auxiliary Building Normal HVAC System in cooling certain rooms during normal operations.

A simplified flowpath for the Piping penetration system is shown below:

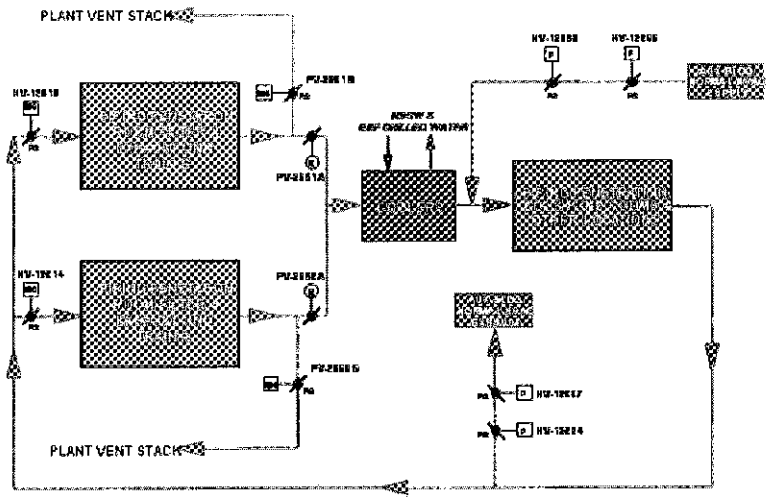

PIPING PENETRATION AREA FILTRATION AND EXHAUST SYSTEM (SIMPLIFIED DIAGRAM)

Notice the isolation dampers to and from the Aux Bldg Normal HVAC system. The Piping Penetration Filtration and Exhaust system use the same ductwork for the areas that both systems serve.

23. 024AK2.01 001

~~The following Unit 1 conditions exist:~~ Deleted on 5/12/05

Which ONE of the following correctly describes an emergency boration flow path option through the regenerative heat exchanger in accordance with 13009-1, CVCS Reactor Makeup Control System?

A. Emergency boration through 1-HV-8104, Emergency Borate Valve, by:
- starting a Boric Acid Transfer Pump
- ensuring a Charging Pump is running
- opening 1-HV-8104, and
- placing 1-FIC-0121 in manual and adjusting flow to 30 gpm.

B. Emergency boration through the normal charging path by:
- starting a Boric Acid Transfer Pump
- ensuring a Charging Pump is running
- opening 1-FV-0110A, BA to BA Blender
- opening 1-FV-0110B, Blender Outlet to Charging Pump Suction
- placing 1-FIC-0121 in manual and adjusting flow to 30 gpm.

C. Emergency boration from the RWST by:
- ensuring one Charging Pump is running and supplied with cooling water
- opening 1-LV-0112D and E, Charging Pump Suctions from the RWST
- closing 1-LV-0112B and C, VCT Outlet Isolations
- placing 1-LV-0112A to the HUT position
- placing 1-FIC-0121 in manual and adjust charging flow to greater than 100 gpm
- adjusting 1-HV-0182, Charging Seal Flow Control, to maintain RCP seal injection flow at approximately 40 gpm (8 - 13 gpm per pump.

D. Emergency boration from the RWST by:
- ensuring one Charging Pump is running and supplied with cooling water
- opening 1-LV-0112D and E, Charging Pump Suctions from the RWST
- closing 1-LV-0112B and C, VCT Outlet Isolations
- placing 1-LV-0112A to the HUT position
- opening 1-HV-8801A and B, BIT discharge isolations
- ensuring 1-FI-0917A, BIT flow, plus total seal injection flow, less total seal return flow is greater than 87.5 gpm.

K/A
024 Emergency Boration
AK2.01 Knowledge of the interrelations between the Emergency Boration and the following: Valves.

K/A MATCH ANALYSIS
Question tests knowledge of flow paths and valve position adjustments to get procedurally required flow rates to satisfy emergency boration requirements. Therefore, the interrelations between emergency boration and valves is being tested by the question.

ANSWER / DISTRACTOR ANALYSIS
A. Incorrect. Flow is too low. See 13009-1, Section 4.9.1.
B. Incorrect. Flow is too low. See 13009-1, Section 4.9.2.
C. Correct. See 13009-1, Section 4.9.3.
D. Incorrect. Regen Heat Exchanger is in service. See 13009-1, Section 4.9.3.

REFERENCES
1. 13009-1, CVCS Reactor Makeup Control System, Rev. 31, 01/13/2004.
2. Vogtle Bank Question LO-LP-09401-04-11.
3. Vogtle Bank Question LO-LP-09401-04-14.
4. Vogtle Bank Question LO-LP-09401-04-03.

MCS	Time: 1	Points: 1.00	Version:	0 1 2 3 4 5 6 7 8 9		
			Answer:	C B C A D D D A C B	Scramble Range: A - D	
Tier:	1			Group:	2	
Key Word:	EMERGENCY BORATION			Cog Level:	MEM 2.7	
Source:	M			Exam:	VG05301	
Test:	R			Author/Reviewer:	MAB/RSB	

23. 024AK2.01 001

The following Unit 1 conditions exist:

- Charging flow path through the Regenerative Heat Exchanger is in service.

Which ONE of the following correctly describes an emergency boration flow path option in accordance with 13009-1, CVCS Reactor Makeup Control System?

A. Emergency boration through 1-HV-8104, Emeregncy Borate Valve, by:
   - starting a Boric Acid Transfer Pump
   - ensuring a Charging Pump is running
   - opening 1-HV-8104, and
   - placing 1-FIC-0121 in manual and adjusting flow to 30 gpm.

   spelling

B. Emergency boration through the normal charging path by:
   - starting a Boric Acid Transfer Pump
   - ensuring a Charging Pump is running
   - opening 1-FV-0110A, BA to BA Blender
   - opening 1-FV-0110B, Blender Outlet to Charging Pump Suction
   - placing 1-FIC-0121 in manual and adjusting flow to 30 gpm.

C. Emergency boration from the RWST by:
   - ensuring one Charging Pump is running and supplied with cooling water
   - opening 1-LV-0112D and E, Charging Pump Suctions from the RWST
   - closing 1-LV-0112B and C, VCT Outlet Isolations
   - placing 1-LV-0112A to the HUT position
   - placing 1-FIC-0121 in manual and adjust charging flow to greater than 100 gpm
   - adjusting 1-HV-0182, Charging Seal Flow Control, to maintain RCP seal injection flow at approximately 40 gpm (8 - 13 gpm per pump.)

D. Emergency boration from the RWST by:
   - ensuring one Charging Pump is running and supplied with cooling water
   - opening 1-LV-0112D and E, Charging Pump Suctions from the RWST
   - closing 1-LV-0112B and C, VCT Outlet Isolations
   - placing 1-LV-0112A to the HUT position
   - opening 1-HV-8801A and B, BIT discharge isolations
   - ensuring 1-FI-0917A, BIT flow, plus total seal injection flow, less total seal return flow is greater than 87.5 gpm.

K/A
024 Emergency Boration
AK2.01 Knowledge of the interrelations between the Emergency Boration and the following: Valves.

K/A MATCH ANALYSIS
Question tests knowledge of flow paths and valve position adjustments to get procedurally required flow rates to satisfy emergency boration requirements. Therefore, the interrelations between emergency boration and valves is being tested by the question.

ANSWER / DISTRACTOR ANALYSIS
A. Incorrect. Flow is too low. See 13009-1, Section 4.9.1.
B. Incorrect. Flow is too low. See 13009-1, Section 4.9.2.
C. Correct. See 13009-1, Section 4.9.3.
D. Incorrect. Regen Heat Exchanger is in service. See 13009-1, Section 4.9.3.

REFERENCES
1. 13009-1, CVCS Reactor Makeup Control System, Rev. 31, 01/13/2004.
2. Vogtle Bank Question LO-LP-09401-04-11.
3. Vogtle Bank Question LO-LP-09401-04-14.
4. Vogtle Bank Question LO-LP-09401-04-03.

MCS Time: 1 Points: 1.00 Version: 0 1 2 3 4 5 6 7 8 9
Answer: C B C A D D D A C B Scramble Range: A - D

Tier:	1	Group:	2
Key Word:	EMERGENCY BORATION	Cog Level:	MEM 2.7
Source:	M	Exam:	VG05301
Test:	R	Author/Reviewer:	MAB/RSB

2. 024AK2.01 001

The following Unit 1 conditions exist:

- Charging flow path through the Regenerative Heat Exchanger is in service.

Which ONE of the following correctly describes an emergency boration flow path option in accordance with 13009-1, CVCS Reactor Makeup Control System?

A. Emergency boration through 1-HV-8104, Emeregncy Borate Valve, by:
- starting a Boric Acid Transfer Pump
- ensuring a Charging Pump is running
- opening 1-HV-8104, and
- placing 1-FIC-0121 in manual and adjusting flow to 30 gpm.

B. Emergency boration through the normal charging path by:
- starting a Boric Acid Transfer Pump
- ensuring a Charging Pump is running
- opening 1-FV-0110A, BA to BA Blender
- opening 1-FV-0110B, Blender Outlet to Charging Pump Suction
- placing 1-FIC-0121 in manual and adjusting flow to 30 gpm.

C. Emergency boration from the RWST by:
- ensuring one Charging Pump is running and supplied with cooling water
- opening 1-LV-0112D and E, Charging Pump Suctions from the RWST
- closing 1-LV-0112B and C, VCT Outlet Isolations
- placing 1-LV-0112A to the HUT position
- placing 1-FIC-0121 in manual and adjust charging flow to 100 gpm greater than
- adjusting 1-HV-0182, Charging Seal Flow Control, to maintain RCP seal injection flow at 40 gpm. (8-13 gpm per pump) approximately

D. Emergency boration from the RWST by:
- ensuring one Charging Pump is running and supplied with cooling water
- opening 1-LV-0112D and E, Charging Pump Suctions from the RWST
- closing 1-LV-0112B and C, VCT Outlet Isolations
- placing 1-LV-0112A to the HUT position
- opening 1-HV-8801A and B, BIT discharge isolations
- ensuring 1-FI-0917A, BIT flow, plus total seal injection flow, less total seal return flow is greater than 87.5 gpm.

K/A
024 Emergency Boration
AK2.01 Knowledge of the interrelations between the Emergency Boration and the following: Valves.

K/A MATCH ANALYSIS
Question tests knowledge of flow paths and valve position adjustments to get procedurally required flow rates to satisfy emergency boration requirements. Therefore, the interrelations between emergency boration and valves is being tested by the question.

ANSWER / DISTRACTOR ANALYSIS
A. Incorrect. Flow is too low. See 13009-1, Section 4.9.1.
B. Incorrect. Flow is too low. See 13009-1, Section 4.9.2.
C. Correct. See 13009-1, Section 4.9.3.
D. Incorrect. Regen Heat Exchanger is in service. See 13009-1, Section 4.9.3.

REFERENCES
1. 13009-1, CVCS Reactor Makeup Control System, Rev. 31, 01/13/2004.
2. Vogtle Bank Question LO-LP-09401-04-11.
3. Vogtle Bank Question LO-LP-09401-04-14.
4. Vogtle Bank Question LO-LP-09401-04-03.

MCS	Time: 1	Points: 1.00	Version:	0 1 2 3 4 5 6 7 8 9			
			Answer:	C B C A D D D A C B		Scramble Range: A - D	
Tier:	1			Group:	2		
Key Word:	EMERGENCY BORATION			Cog Level:	MEM 2.7		
Source:	M			Exam:	VG05301		
Test:	R			Author/Reviewer:	MAB/RSB		

9 **EMERGENCY BORATION**

NOTE

Table 1 provides a convenient tool for checking emergency boration flow path alternatives.

4.9.1 **Emergency Boration Through 1-HV-8104**

4.9.1.1 START one Boric Acid Transfer Pump.

4.9.1.2 ENSURE a Charging Pump is running.

4.9.1.3 OPEN EMERGENCY BORATE 1-HV-8104.

NOTE

The following step assumes that with 12 gpm of seal return, 30 gpm will be supplied to the RCS.

4.9.1.4 PLACE 1-FIC-0121 in MANUAL.

4.9.1.5 ADJUST 1-FIC-0121 to MAINTAIN flow greater than 42 gpm.

4.9.1.6 VERIFY Emergency Boration Flow 1-FI-0183A greater than 30 gpm.

4.9.1.7 If flow is less than 30 gpm, START the second Boric Acid Transfer Pump.

4.9.1.8 OPERATE the Pressurizer Backup Heaters as necessary in order to equalize boron concentration between the RCS and the Pressurizer.

4.9.1.9 OBSERVE that plant conditions are consistent with the boration of the RCS:

a. RCS Tavg may be dropping,

b. NIS may be dropping.

4.9.1.10 DETERMINE the amount of boric acid required to allow termination of emergency boration.

4.9.1.11 When the determined amount of boric acid has been added to the RCS, CLOSE 1-HV-8104.

9.1.12 RETURN the Boric Acid Transfer Pumps to the desired system configuration.

4.9.1.13 RESTORE 1-FIC-0121 to the AUTO position.

4.9.1.14 DIRECT Chemistry to sample and report the RCS boron concentration or MONITOR the Boron Meter 1-AI-40134 if available.

4.9.2 **Emergency Boration Through The Normal Charging Flow path**

4.9.2.1 START one Boric Acid Transfer Pump.

4.9.2.2 ENSURE a Charging Pump is running.

4.9.2.3 OPEN the following:

a. BA TO BA BLENDER 1-FV-0110A,

b. BLENDER OUTLET TO CHARGING PUMPS SUCT 1-FV-0110B

NOTE

The following step assumes that with 12 gpm of seal return, 30 gpm will be supplied to the RCS.

4.9.2.4 PLACE 1-FIC-0121 in MANUAL.

4.9.2.5 ADJUST 1-FIC-0121 to MAINTAIN flow greater than 42 gpm.

4.9.2.6 VERIFY Emergency Boration Flow greater than 30 gpm as indicated by 1-FI-0110A.

4.9.2.7 If flow is less than 30 gpm, START the second Boric Acid Transfer Pump.

4.9.2.8 OPERATE the Pressurizer Backup Heaters as necessary in order to equalize boron concentration between the RCS and the Pressurizer.

4.9.2.9 OBSERVE that plant conditions are consistent with the boration of the RCS:

a. RCS Tavg may be dropping,

b. NIS may be dropping.

9.2.10 DETERMINE the amount of boric acid required to allow termination of emergency boration.

4.9.2.11 When the determined amount of boric acid has been added to the RCS, CLOSE 1-FV-0110A and 1-FV-0110B.

4.9.2.12 ESTABLISH automatic makeup per Section 4.1 of this procedure.

4.9.2.13 RESTORE 1-FIC-0121 to the AUTO position.

4.9.2.14 DIRECT Chemistry to sample and report the RCS boron concentration or MONITOR the Boron Meter 1-AI-40134 if available.

4.9.3 **Emergency Boration From The RWST**

4.9.3.1 ENSURE one Charging Pump is running and supplied with cooling water.

4.9.3.2 OPEN Charging Pump Suctions from the RWST 1-LV-0112D and 1-LV-0112E.

4.9.3.3 CLOSE VCT OUTLET ISOLATIONs 1-LV-0112B and 1-LV-0112C.

4.9.3.4 PLACE 1-LV-0112A to the HUT position.

4.9.3.5 If the charging flow path through the Regenerative Heat Exchanger is in service:

a. PLACE 1-FIC-0121 in MANUAL,

b. ADJUST Charging Line Flow Controller 1-FIC-0121 to obtain Charging Flow 1-FI-0121C greater than 100 gpm,

c. ADJUST Charging Seal Flow Control 1-HV-0182 as necessary to maintain RCP seal injection flow at approximately 40 gpm (between 8 and 13 gpm per pump).

4.9.3.6 If the charging flow path through the Regenerative Heat Exchanger is not in service:

a. ENSURE OPEN BIT DISCH ISOLATIONs 1-HV-8801A and 1-HV-8801B,

b. ENSURE BIT Flow (1-FI-0917A) plus total seal injection flow less total seal return flow is greater than 87.5 gpm,

c. ADJUST Charging Line Flow Controller 1-FIC-0121 as necessary to maintain RCP seal injection flow at maximum flow less than 13 gpm per pump.

4.9.3.7 If required for RCS inventory control, PLACE an additional letdown orifice in service.

9.3.8 OPERATE the Pressurizer Backup Heaters as necessary in order to equalize boron concentrations between the RCS and the Pressurizer.

4.9.3.9 OBSERVE for indications consistent with boration of the RCS:

a. RCS Tavg may be dropping,

b. NIS may be dropping.

4.9.3.10 When boration is complete:

a. OPEN VCT OUTLET ISOLATIONs 1-LV-0112B and 1-LV-0112C,

b. CLOSE Charging Pump Suctions from the RWST 1-LV-0112D and 1-LV-0112E.

c. PLACE 1-HS-0112A to the AUTO position.

d. RESTORE 1-FIC-0121 to the AUTO position if it was placed in MANUAL.

4.9.3.11 DIRECT Chemistry to sample and report the RCS boron concentration or MONITOR Boron Meter 1-AI-40134 if available.

LO-LP-09401-04-11
Which of the following is NOT acceptable method to emergency borate the RCS per SOP-13009?

A. **BAST via boric acid transfer pump through HV-8104 (Emergency Boration valve) to the suction of CCP A or B. From CCP A or B to the RCS with charging flow indicator FI-121 reading 40 gpm and Emergency Boration flow indicator FI-183 reading 60 gpm.**

B. BAST via boric acid transfer pump through the normal boration flowpath. FV-110B (Blender outlet to charging pump suction) and FV-110A (BA to Blender) open to provide greater than 30 gpm as indicated by FR-110. From the CCP A or B to the RCS at 43 gpm indicated on FI-121.

C. RWST through LV-112D or E to the suction of CCP A or B. From CCP A or B through the normal charging flowpath through Regenerative HX with charging flow indicator FI-121 reading 110 gpm.

D. RWST through LV-112D or 112E to the suction of CCP A or B. From CCP A or B through HV-8801A and 8801B (BIT DISCH ISOL) with BIT flow indicator FI-917 reading 92 gpm.

LO-LP-09401-04-14
Given the folllowing conditions:

* Unit 1 is in MODE 3 following a trip from 11% Reactor power

* With the operating crew in 19001-C the Reactor Operator reports that DRPI indicates 2 control rods failed to fully insert

* RCP seal injection flow is at 9 gpm for each pump with #1 seal leakoff at 3 gpm

Which of the following is NOT an acceptable method to emergency borate the RCS per SOP-13009?

A. **BAST via boric acid transfer pump through HV-8104 (Emergency Boration valve) to the suction of a CCP. From the CCP to the RCS with charging flow indicator FI-121 reading 40 gpm and Emergency Boration flow indicator FI-183 reading 43 gpm.**

B. BAST via boric acid transfer pump through the normal boration flowpath. FV-110B (Blender outlet to charging pump suction) and FV-110A (BA to Blender) open to provide greater than 30 gpm as indicated by FR-110. From the CCP to the RCS at 43 gpm indicated on FI-121.

C. RWST through LV-112D or E to the suction of a NCP. From the NCP through the normal charging flowpath through Regenerative HX with charging flow indicator FI-121 reading 100 gpm.

D. RWST through LV-112D or 112E to the suction of a NCP. From the NCP through HV-8801A and 8801B (BIT DISCH ISOL) with BIT flow indicator FI-917 reading 92 gpm.

LO-LP-09401-04-03
Which of the following is NOT acceptable method to emergency borate the RCS per SOP-13009?

A. **BAST via boric acid transfer pump through HV-8104 (Emergency Boration valve) to the suction of a CCP. From the CCP to the RCS with charging flow indicator FI-121 reading 40 gpm and Emergency Boration flow indicator FI-183 reading 43 gpm.**

B. BAST via boric acid transfer pump through the normal boration flowpath. FV-110B (Blender outlet to charging pump suction) and FV-110A (BA to Blender) open to provide greater than 30 gpm as indicated by FR-110. From the CCP to the RCS at 43 gpm indicated on FI-121.

C. RWST through LV-112D or E to the suction of a CCP. From the CCP through the normal charging flowpath through Regenerative HX with charging flow indicator FI-121 reading 100 gpm.

D. RWST through LV-112D or 112E to the suction of a CCP. From the CCP through HV-8801A and 8801B (BIT DISCH ISOL) with BIT flow indicator FI-917 reading 92 gpm.

24. 025AK1.01 001

The following conditions exist on Unit 1:

- The plant is 37 days and 12 hours into a refueling outage.
- The unit is in Mode 5 at mid-loop conditions.
- RHR 1A heat exchanger inlet temperature is stable at 100 °F.
- Due to outage complications, core offload has not yet commenced.
- Subsequently the 1A RHR Pump trips.
- The crew enters 18019-C, Loss of Residual Heat Removal and are preparing to calculate the time to boil.

Which ONE of the following is correct if the loss of RHR continues without mitigation? (References provided)

A. ✓ Promptly initiate actions to establish containment closure and start containment cooling fans in low speed.

B. Promptly initiate actions to establish containment closure and start containment cooling fans in fast speed.

C. In approximately 7 minutes, initiate actions to establish containment closure and start containment cooling fans in low speed.

D. In approximately 7 minutes, initiate actions to establish containment closure and start containment cooling fans in fast speed.

PROVIDE THE FOLLOWING REFERENCES:
18019-C, Figures 1 - 5.

K/A
025 Loss of RHR System
AK1.01 Knowledge of the operational implications of the following concepts as they apply to Loss of Residual Heat Removal System: Loss of RHRS during all modes of operation.

K/A MATCH ANALYSIS
An implication of loss of RHR at mid-loops is that there is a small amount of time until the core reaches saturation conditions. This question tests the ability of the applicant to use tools to calculate the time to boil and based on this time, determine required operator actions. Therefore, operational implications of loss of RHR are being tested.

ANSWER / DISTRACTOR ANALYSIS
A. Correct. Step B4 of 18019 gives direction to calculate heatup rate. If the time to boil is less than 1 hour, then do steps B6 and B7. Steps B6 and B7 contain actions to close containment and start fans in low speed. In this question the time to boil is less than one hour, per Figure 3 (900 hours at 100 F initial temp = < 45 minutes).
B. Incorrect. Fans are to be started in slow speed, not fast. Plausible because applicant may not know correct mode of fan operation.
C. Incorrect. If Figure 4 is incorrectly used, then time to boil is about 67 minutes, leaving 7 minutes until steps B6 and B7 need to be performed. Plausible due to possibility of using the wrong figure.
D. Incorrect. Reasons of B and C above.

REFERENCES
1. 18019-C, Loss of Residual Heat Removal, Rev. 24, 09/17/2003.
2. Vogtle Exam Bank Question LO-LP-60315-03-02.

MCS	Time:	1	Points:	1.00	Version:	0 1 2 3 4 5 6 7 8 9	
					Answer:	A A B D C D C D B C	Scramble Range: A - D
Tier:		1			Group:	1	
Key Word:		LOSS OF RHR MID-LOOP			Cog Level:	C/A 3.9	
Source:		M			Exam:	VG05301	
Test:		R			Author/Reviewer:	MAB/RSB	

24. 025AK1.01 001

The following conditions exist on Unit 1:

- The plant is 37 days and 12 hours into a refueling outage.
- The unit is in Mode 5 at mid-loop conditions.
- RHR 1A heat exchanger inlet temperature is stable at 100 °F.
- Due to outage complications, core offload has not yet commenced.
- Subsequently the 1A RHR Pump trips.
- The crew enters 18019-C, Loss of Residual Heat Removal and are preparing to calculate the time to boil.

Which ONE of the following is correct if the loss of RHR continues without mitigation? (References provided)

A.✓ Immediately initiate actions to establish containment closure and start containment cooling fans in low speed.

B. Immediately initiate actions to establish containment closure and start containment cooling fans in fast speed.

C. In approximately 7 minutes, initiate actions to establish containment closure and start containment cooling fans in low speed.

D. In approximately 7 minutes, initiate actions to establish containment closure and start containment cooling fans in fast speed.

PROVIDE THE FOLLOWING REFERENCES:
18019-C, Figures 1 - 5.

K/A
025 Loss of RHR System
AK1.01 Knowledge of the operational implications of the following concepts as they apply to Loss of Residual Heat Removal System: Loss of RHRS during all modes of operation.

K/A MATCH ANALYSIS
An implication of loss of RHR at mid-loops is that there is a small amount of time until the core reaches saturation conditions. This question tests the ability of the applicant to use tools to calculate the time to boil and based on this time, determine required operator actions. Therefore, operational implications of loss of RHR are being tested.

ANSWER / DISTRACTOR ANALYSIS
A. Correct. Step B4 of 18019 gives direction to calculate heatup rate. If the time to boil is less than 1 hour, then do steps B6 and B7. Steps B6 and B7 contain actions to close containment and start fans in low speed. In this question the time to boil is less than one hour, per Figure 3 (900 hours at 100 F initial temp = < 45 minutes).
B. Incorrect. Fans are to be started in slow speed, not fast. Plausible because applicant may not know correct mode of fan operation.
C. Incorrect. If Figure 4 is incorrectly used, then time to boil is about 67 minutes, leaving 7 minutes until steps B6 and B7 need to be performed. Plausible due to possibility of using the wrong figure.
D. Incorrect. Reasons of B and C above.

REFERENCES
1. 18019-C, Loss of Residual Heat Removal, Rev. 24, 09/17/2003.
2. Vogtle Exam Bank Question LO-LP-60315-03-02.

MCS	Time:	1	Points:	1.00	Version:	0 1 2 3 4 5 6 7 8 9	
					Answer:	A A B D C D C D B C	Scramble Range: A - D
Tier:		1			Group:	1	
Key Word:		LOSS OF RHR MID-LOOP			Cog Level:	C/A 3.9	
Source:		M			Exam:	VG05301	
Test:		R			Author/Reviewer:	MAB/RSB	

3. 025AK1.01 001

The following conditions exist on Unit 1:

- The plant is 37 days and 12 hours into a refueling outage.
- The unit is in Mode 5 at mid-loop conditions.
- RHR 1A heat exchanger inlet temperature is stable at 100 °F.
- Due to outage complications, refueling has not yet commenced. → core offload
- Subsequently the 1A RHR Pump trips.
- The crew enters 18019-C, Loss of Residual Heat Removal and are preparing to calculate the time to boil.

Which ONE of the following is correct if the loss of RHR continues without mitigation? (References provided)

A. ✓ Immediately initiate actions to establish containment closure and start containment cooling fans in low speed.

B. Immediately initiate actions to establish containment closure and start containment cooling fans in fast speed.

C. In approximately 7 minutes, initiate actions to establish containment closure and start containment cooling fans in low speed.

D. In approximately 7 minutes, initiate actions to establish containment closure and start containment cooling fans in fast speed.

PROVIDE THE FOLLOWING REFERENCES:
18019-C, Figures 1 - 5.

K/A
025 Loss of RHR System
AK1.01 Knowledge of the operational implications of the following concepts as they apply to Loss of Residual Heat Removal System: Loss of RHRS during all modes of operation.

K/A MATCH ANALYSIS
An implication of loss of RHR at mid-loops is that there is a small amount of time until the core reaches saturation conditions. This question tests the ability of the applicant to use tools to calculate the time to boil and based on this time, determine required operator actions. Therefore, operational implications of loss of RHR are being tested.

ANSWER / DISTRACTOR ANALYSIS
A. Correct. Step B4 of 18019 gives direction to calculate heatup rate. If the time to boil is less than 1 hour, then do steps B6 and B7. Steps B6 and B7 contain actions to close containment and start fans in low speed. In this question the time to boil is less than one hour, per Figure 3 (900 hours at 100 F initial temp = < 45 minutes).
B. Incorrect. Fans are to be started in slow speed, not fast. Plausible because applicant may not know correct mode of fan operation.
C. Incorrect. If Figure 4 is incorrectly used, then time to boil is about 67 minutes, leaving 7 minutes until steps B6 and B7 need to be performed. Plausible due to possibility of using the wrong figure.
D. Incorrect. Reasons of B and C above.

REFERENCES
1. 18019-C, Loss of Residual Heat Removal, Rev. 24, 09/17/2003.
2. Vogtle Exam Bank Question LO-LP-60315-03-02.

MCS	Time:	1	Points:	1.00	Version:	0 1 2 3 4 5 6 7 8 9	
					Answer:	A A B D C D C D B C	Scramble Range: A - D
Tier:		1			Group:	1	
Key Word:		LOSS OF RHR MID-LOOP			Cog Level:	C/A 3.9	
Source:		M			Exam:	VG05301	
Test:		R			Author/Reviewer:	MAB/RSB	

B. RHR LOSS/RCS LKG MODES 6 OR 5, RCS <PZR LVL/SG NOZZLE DAMS INSTALLED

ACTION/EXPECTED RESPONSE	RESPONSE NOT OBTAINED
NOTE: 91001-C EMERGENCY CLASSIFICATION AND IMPLEMENTING INSTRUCTIONS should be implemented at this time.	
B4. Determine the time to boiling based on existing conditions. a. IF a loss of RHR flow, THEN refer to FIGURE 1 to determine heatup rate and calculate time to boiling.	B4. IF Core Coolant temperature monitoring using core exit thermocouples is unavailable, THEN go to Step B5.
b. Time to boiling - LESS THAN 60 MIN.	b. Perform the following: 1) WHEN time to boiling is less than 60 min, THEN perform Steps B5 thru B7. 2) Go to Step B8. Observe cautions prior to Step B8.

B. RHR LOSS/RCS LKG MODES 6 OR 5, RCS <PZR LVL/SG NOZZLE DAMS INSTALLED

ACTION/EXPECTED RESPONSE | RESPONSE NOT OBTAINED

CAUTION: Containment temperature could rise to 137°F within one hour if RHR cooling is lost at midloop conditions.

B5. Initiate actions to protect personnel working in containment.

a. Evacuate non-essential personnel in containment.

b. Periodically monitor containment radiation conditions using any available RAD monitors in containment.

c. Monitor ambient containment temperature to determine if evacuation of all personnel is required.

B. RHR LOSS/RCS LKG MODES 6 OR 5, RCS <PZR LVL/SG NOZZLE DAMS INSTALLED

ACTION/EXPECTED RESPONSE	RESPONSE NOT OBTAINED
B6. Initiate actions to establish CNMT closure by performing the following:	
• ACTUATE CIA/CVI	• IF SSPS in TEST, THEN manually shut dampers and valves.
• Verify equipment hatch shut	
• Verify personnel hatch shut	
• Review LCO Log for containment isolation	
• As time permits, perform actions required to establish Containment integrity by initiating 14210, CONTAINMENT BUILDING PENETRATION VERIFICATION - REFUELING and applicable steps of 12001-C, UNIT HEATUP TO HOT SHUTDOWN (MODE 5 TO MODE 4).	

B. RHR LOSS/RCS LKG MODES 6 OR 5, RCS <PZR LVL/SG NOZZLE DAMS INSTALLED

ACTION/EXPECTED RESPONSE	RESPONSE NOT OBTAINED
B7. Start available containment cooling fans in low speed. • HS-12582A CTB CLG UNIT FAN-1 LOW SPEED • HS-2582A CTB CLG UNIT FAN-2 LOW SPEED • HS-12583A CTB CLG UNIT FAN-3 LOW SPEED • HS-2583A CTB CLG UNIT FAN-4 LOW SPEED • HS-12584A CTB CLG UNIT FAN-5 LOW SPEED • HS-2584A CTB CLG UNIT FAN-6 LOW SPEED • HS-12585A CTB CLG UNIT FAN-7 LOW SPEED • HS-2585A CTB CLG UNIT FAN-8 LOW SPEED	

Sheet 1 of 1

RCS TIME TO SATURATION
(FULL SPENT CORE)

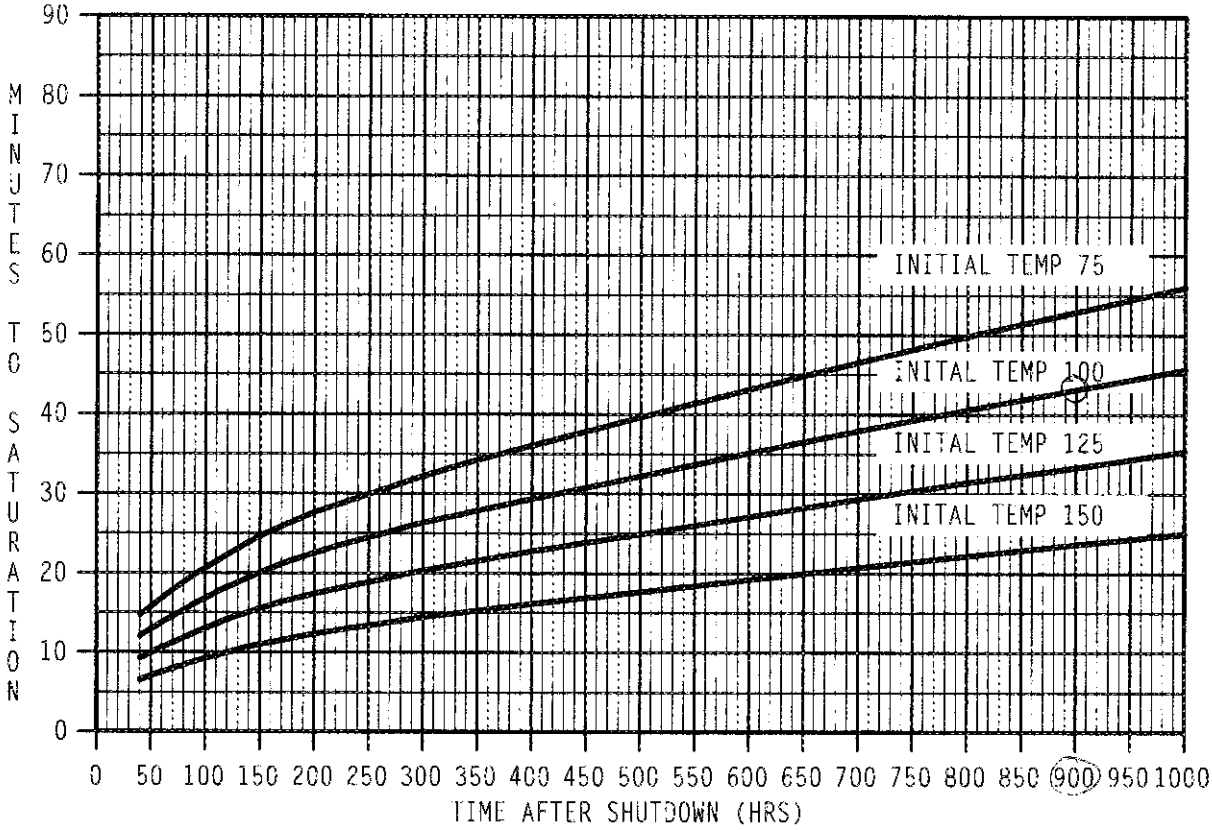

Assumptions:

1) Full Spent Core Heat Load
2) Mid Loop Conditions
3) RCS Vented To Atmosphere With or Without Loop Dams

FIGURE 3

Sheet 1 of 1

RCS TIME TO SATURATION
(RELOADED CORE)

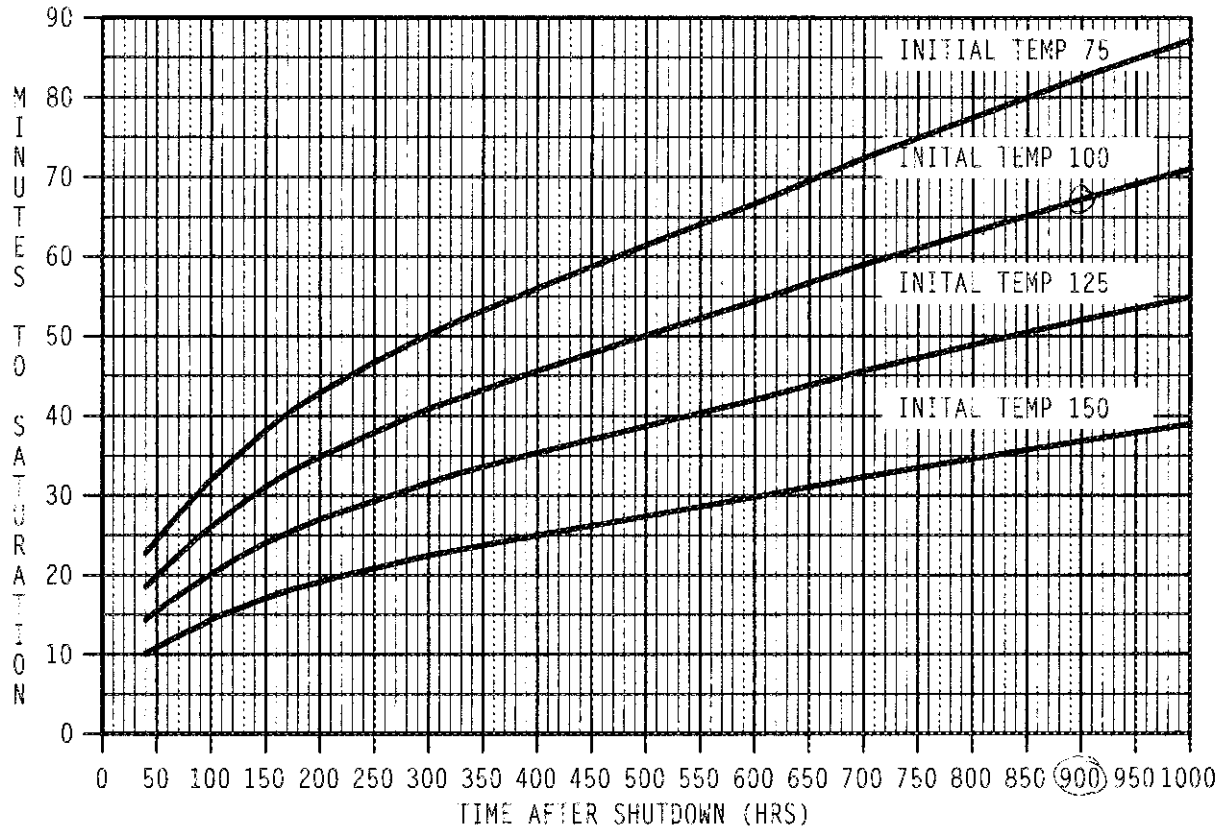

$\frac{900 \text{ hrs}}{24 \frac{\text{hrs}}{\text{Day}}} = 37.5$ Days

Assumptions:

1) Reloaded Core Heat Load
2) Mid Loop Conditions
3) RCS Vented To Atmosphere With or Without Loop Dams

FIGURE 4 - TIME TO BOILING

LO-LP-60315-03-02
Given the following conditions for Unit 1:

* Refueling 1 outage at 16 days and 16 hours
* Unit 1 in Mode 5 at mid-loop conditions
* RHR 1A heat exchanger inlet temperature stable @ 100 degrees F
* Core reload completed with average burnup of 35,000 MWD/MTU
* RHR 1A pump trips

If a complete loss of RHR continues, which of the following is TRUE? Use the attached Figures 1-5, from AOP-18019-C.

A. One CCP will NOT be able to provide the required ECCS injection flow needed.

B. The RCS could reach saturation temperature within 50 minutes.

C. The core would not become exposed for at least 4.0 hours.

D. The reactor coolant heatup rate would not exceed 2 degrees a minute.

LO-LP-60315-03
Given figures 1-4 of AOP 18019-C, determine minimum ECCS flow, time to saturation, time to core uncovery, and heatup rate.

My copy from working @ home.

025AK1.01

Given the following conditions for Unit 1:

* Refueling 1 outage at 37 days and 12 hours
* Unit 1 in Mode 5 at mid-loop conditions
* RHR 1A heat exchanger inlet temperature stable @ 100 degrees F
* Due to outage complications, refueling has not commenced
* Subsequently the 1A RHR pump trips.

Which ONE of the following is correct if the loss of RHR continues without mitigation? (Reference Provided – Provide Figure 1 - 5).

A---Immediately initiate actions to establish containment closure and start containment cooling fans in low speed.

B---Immediately initiate actions to establish containment closure and start containment cooling fans in fast speed.

C---In approximately 7 minutes, initiate actions to establish containment closure and start containment cooling fans in low speed.

D--- In approximately 7 minutes, initiate actions to establish containment closure and start containment cooling fans in fast speed.

Distractor Analysis

A. Time to boil is 43 minutes. See 18019-C Steps B5 – B7.
B. Containment fans are to be started in slow speed, not fast speed.
C. Would be correct if refueling were completed.
D. Containment fans are to be started in slow speed, not fast speed.

25. 026AK3.02 001

The following Unit 1 conditions exist:

- Unit is in Mode 3.
- CCW Pumps 2 and 6 are running.
- CCW Pump 4 is in Pull-To-Lock.
- All other CCW Pumps are in their normal configuration.

A loss of offsite power occurs coincident with a Low Steam Line Safety Injection. Both emergency diesel generators start and energize their respective busses.

Which ONE of the following is the correct CCW system response and the reason for the response?

A. Pumps 1, 2, and 3 start at 20.5 seconds and Pumps 5 and 6 start at 25.5 seconds due to the Pump 4 breaker not closing.

B. Pumps 1, 2, and 3 start at 20.5 seconds and Pumps 5 and 6 start at 25.5 seconds due to Pump 4 low discharge pressure.

C. Pumps 1, 2, and 3 start at 20.5 seconds and Pump 6 starts at 25.5 seconds due to the Pump 4 breaker not closing (Pump 5 does not start).

D. Pumps 1, 2, and 3 start at 20.5 seconds and Pump 6 starts at 25.5 seconds due to Pump 4 low discharge pressure (Pump 5 does not start).

(ENSURE UTILITY VERIFIES THAT PUMP 6 STARTS DUE TO BREAKER POSITION OF PUMP 4 AND NOT LOW DISCHARGE PRESSURE. THE LESSON PLAN IMPLIES THIS, BUT DOES NOT EXPLICITLY STATE IT.)

K/A
026 Loss of Component Cooling Water
AK3.02 Knowledge of the reasons for the following responses as they apply to the Loss of Component Cooling Water: The automatic actions (alignments) within the CCWS resulting from the actuation of the ESFAS.

K/A MATCH ANALYSIS
CCW is lost in its entirety when the LOOP and SIS occur. These conditions have an impact on which pumps auto start when the sequencer operates. The question tests what automatic actions occur to regain CCW and the reasons for those actions (i.e. What causes the start of pump 6?).

ANSWER / DISTRACTOR ANALYSIS
A. Incorrect. Pump 5 does not start. Plausible because Pump 4 breaker actually does not close and an additional pump does actually start at 25.5 sec.
B. Incorrect. Pump 5 does not start. Plausible because of same reasons as 'A' above.
C. Correct. See Reference 4, Page 23 and the Referenced Vogtle Bank Questions.
D. Incorrect. Pump 6 does not start due to Pump 4 low discharge pressure. Plausible because Pump 4 will not start and as a result will not develop discharge pressure.

REFERENCES
1. Vogtle Exam Bank Question LO-LP-10101-05-01.
2. Vogtle Exam Bank Question LO-LP-10101-10-03.
3. Vogtle Exam Bank Question LO-LP-10101-10-04.
4. V-LO-LP-10101, CCW System, Revision 1.0.

MCS	Time:	1	Points:	1.00	Version:	0	1	2	3	4	5	6	7	8	9								
					Answer:	C	D	C	D	D	B	C	C	B	D							Scramble Range: A - D	

Tier:	1	Group:	1
Key Word:	CCW SAFETY INJECTION	Cog Level:	C/A 3.6
Source:	M	Exam:	VG05301
Test:	R	Author/Reviewer:	MAB/RSB

25. 026AK3.02 001

The following Unit 1 conditions exist:

- Unit is in Mode 3.
- CCW Pumps 2 and 6 are running.
- CCW Pump 4 is in Pull-To-Lock.
- All other CCW Pumps are in their normal configuration.

A loss of offsite power occurs coincident with a Low Steam Line Safety Injection. Both emergency diesel generators start and energize their respective busses.

Which ONE of the following is the correct CCW system response and the reason for the response?

A. Pumps 1, 2, and 3 start at 20.5 seconds and Pumps 5 and 6 start at 25.5 seconds due to the Pump 4 breaker not closing.

B. Pumps 1, 2, and 3 start at 20.5 seconds and Pumps 5 and 6 start at 25.5 seconds due to Pump 4 low discharge pressure.

C. Pumps 1, 2, and 3 start at 20.5 seconds and Pump 6 starts at 25.5 seconds due to the Pump 4 breaker not closing (Pump 5 does not start).

D. Pumps 1, 2, and 3 start at 20.5 seconds and Pump 6 starts at 25.5 seconds due to Pump 4 low discharge pressure (Pump 5 does not start).

(ENSURE UTILITY VERIFIES THAT PUMP 6 STARTS DUE TO BREAKER POSITION OF PUMP 4 AND NOT LOW DISCHARGE PRESSURE. THE LESSON PLAN IMPLIES THIS, BUT DOES NOT EXPLICITLY STATE IT.)

K/A
026 Loss of Component Cooling Water
AK3.02 Knowledge of the reasons for the following responses as they apply to the Loss of Component Cooling Water: The automatic actions (alignments) within the CCWS resulting from the actuation of the ESFAS.

K/A MATCH ANALYSIS
CCW is lost in its entirety when the LOOP and SIS occur. These conditions have an impact on which pumps auto start when the sequencer operates. The question tests what automatic actions occur to regain CCW and the reasons for those actions (i.e. What causes the start of pump 6?).

ANSWER / DISTRACTOR ANALYSIS
A. Incorrect. Pump 5 does not start. Plausible because Pump 4 breaker actually does not close and an additional pump does actually start at 25.5 sec.
B. Incorrect. Pump 5 does not start. Plausible because of same reasons as 'A' above.
C. Correct. See Reference 4, Page 23 and the Referenced Vogtle Bank Questions.
D. Incorrect. Pump 6 does not start due to Pump 4 low discharge pressure. Plausible because Pump 4 will not start and as a result will not develop discharge pressure.

REFERENCES
1. Vogtle Exam Bank Question LO-LP-10101-05-01.
2. Vogtle Exam Bank Question LO-LP-10101-10-03.
3. Vogtle Exam Bank Question LO-LP-10101-10-04.
4. V-LO-LP-10101, CCW System, Revision 1.0.

MCS	Time:	1	Points:	1.00	Version:	0	1	2	3	4	5	6	7	8	9						
					Answer:	C	D	C	D	D	B	C	C	B	D	Scramble Range: A - D					

Tier:	1	Group:	1
Key Word:	CCW SAFETY INJECTION	Cog Level:	C/A 3.6
Source:	M	Exam:	VG05301
Test:	R	Author/Reviewer:	MAB/RSB

4. 026AK3.02 001

The following Unit 1 conditions exist:

- Unit is in Mode 3.
- CCW Pumps 2 and 6 are running.
- CCW Pump 4 is in Pull-To-Lock.
- All other CCW Pumps are in their normal configuration.

A loss of offsite power occurs coincident with a Low Steam Line Safety Injection. Both emergency diesel generators start and energize their respective busses.

Which ONE of the following is the correct CCW system response and the reason for the response?

A. Pumps 1, 2, and 3 start at 20.5 seconds and Pumps 5 and 6 start at 25.5 seconds due to the Pump 4 breaker not closing.

B. Pumps 1, 2, and 3 start at 20.5 seconds and Pumps 5 and 6 start at 25.5 seconds due to Pump 4 low discharge pressure.

C. Pumps 1, 2, and 3 start at 20.5 seconds and Pump 6 starts at 25.5 seconds due to the Pump 4 breaker not closing (Pump 5 does not start).

D. Pumps 1, 2, and 3 start at 20.5 seconds and Pump 6 starts at 25.5 seconds due to Pump 4 low discharge pressure (Pump 5 does not start).

(ENSURE UTILITY VERIFIES THAT PUMP 6 STARTS DUE TO BREAKER POSITION OF PUMP 4 AND NOT LOW DISCHARGE PRESSURE. THE LESSON PLAN IMPLIES THIS, BUT DOES NOT EXPLICITLY STATE IT.)

K/A
026 Loss of Component Cooling Water
AK3.02 Knowledge of the reasons for the following responses as they apply to the Loss of Component Cooling Water: The automatic actions (alignments) within the CCWS resulting from the actuation of the ESFAS.

K/A MATCH ANALYSIS
CCW is lost in its entirety when the LOOP and SIS occur. These conditions have an impact on which pumps auto start when the sequencer operates. The question tests what automatic actions occur to regain CCW and the reasons for those actions (i.e. What causes the start of pump 6?).

ANSWER / DISTRACTOR ANALYSIS
A. Incorrect. Pump 5 does not start. Plausible because Pump 4 breaker actually does not close and an additional pump does actually start at 25.5 sec.
B. Incorrect. Pump 5 does not start. Plausible because of same reasons as 'A' above.
C. Correct. See Reference 4, Page 23 and the Referenced Vogtle Bank Questions.
D. Incorrect. Pump 6 does not start due to Pump 4 low discharge pressure. Plausible because Pump 4 will not start and as a result will not develop discharge pressure.

REFERENCES
1. Vogtle Exam Bank Question LO-LP-10101-05-01.
2. Vogtle Exam Bank Question LO-LP-10101-10-03.
3. Vogtle Exam Bank Question LO-LP-10101-10-04.
4. V-LO-LP-10101, CCW System, Revision 1.0.

MCS	Time:	1	Points:	1.00	Version:	0 1 2 3 4 5 6 7 8 9	
					Answer:	C D C D D B C C B D	Scramble Range: A - D

Tier:	1	Group:	1
Key Word:	CCW SAFETY INJECTION	Cog Level:	C/A 3.6
Source:	M	Exam:	VG05301
Test:	R	Author/Reviewer:	MAB/RSB

should read at least 85 psig and the CCW discharge header flow between 5020 and 6000 gpm.

10.4.3 System Response to Reactor Trip

A. Reactor Trip - No Safety Injection, No Loss of Offsite Power

When a unit trips and no safety injection or station blackout occurs, the system will continue operation, using off site power channeled through the system auxiliary transformer.

B. Reactor Trip - With Safety Injection, No Loss of Offsite Power

In the event of a reactor trip with a safety injection, the #1 and #3 in train "A" and #2 and #4 in train "B," CCW pumps will receive a start signal 20.5 seconds after the SI signal and will start if they are not in the pull-to-lock position. If either one of the pumps trip or does not start, the #5 in train "A," and the #6 in train "B" pump will start 25.5 seconds after the SI signal if they are not in the pull-to-lock position.

If pump 5 or 6 was running prior to the Safety Injection then three pumps will be running after the sequencer times out. This is not desirable as the weaker pump is dead headed, resulting in a loss of mini flow to that pump, causing possible pump damage.

C. Reactor Trip - No Safety Injection, With Loss of Offsite Power

In the event of a reactor trip with a station blackout, the first two component cooling water pumps in each train, #1 and #3 in train "A" and #2 and #4 in train "B", are first shed from the bus then started automatically 20.5 seconds after the DG breaker closes in to the 4.16KV ESF bus. If either pump motor trips out or does not start, the spare CCW pump motor, #5 in train "A" and #6 in Train "B", will start at 25.5 seconds after the DG breaker closes. These trips would also annunciate on the electrical equipment board as a breaker failure to re-close after stepping.

Implies that the start logic is based on breaker position and not a secondary effect such as discharge pressure,

D. Reactor Trip - With Safety Injection and Loss of Offsite Power

When safety injection occurs in coincidence with station blackout, the component cooling water pumps will be restarted automatically as part of the safety injection actuation sequence when power is regained to the 4.16 kV ESF buses from the onsite diesel generators.

ARP 17002-1/2 directs the operator to enter AOP 18020-C "Loss of Component Cooling Water". The AOP actions include:

- Verify two CCW pumps running in the affected train.
- CCW system parameters for the affected train are normal. If not, stop the pumps in the affected train and place the unaffected train in service.
- Verify that NSCW system parameters are normal for the train in service.
- IF the unaffected train was required to be placed in service, perform the following:
    1. Place the unaffected train of RHR in service if required.
    2. Verify the unaffected train of CCW has normal system parameters.
    3. Place the unaffected train of SFP Cooling in service.
    4. Restore the affected train of CCW to service and implement the applicable Tech Spec actions.

D. CCW Low Flow

The CCW Low Flow alarm (ALB02 B06) setpoint is 8500 gpm. Low CCW flow could be due to the trip or degradation of a running pump. If a pump trip has occurred, the standby CCW pump will start on low header pressure. The actions required by the operator are the same as in Section 3 "CCW Low Header Pressure" as described above.

E. Trip of Running Pump

An immediate automatic start of the standby pump will occur if either of the two running pumps trips. This is in anticipation of a low discharge header condition. For this auto start, the control switch must be in the automatic position, and the sequencer not running (stepping) through.

F. Single Pump Operations

Placing a train of CCW in single pump operations will make the affected train INOPERABLE. Ensure the opposite train is OPERABLE prior to going to single pump operations and ensure that the opposite train of SFP Cooling and RHR are in service if required. Shutdown the affected train and place a single CCW pump handswitch in PULL-TO-LOCK. Isolate the CCW side of either the SFP Cooling or the RHR heat exchanger, using the inlet and outlet isolation valves. If the RHR heat exchanger is isolated, place a Caution Tag on the RHR pump handswitch for the affected train with information stating that its heat exchanger cooling has been isolated. Start a single CCW pump. Observe a rise in system parameters for the affected train. CCW discharge header pressure

LO-LP-10101-10-04
The plant is in MODE 3 with only Component Cooling Water (CCW) pumps 1 & 3 operating to supply all system loads when a Low Steamline Pressure Safety Injection occurs.

Which ONE of the following correctly describes the system response?

a. **CCW pumps 1 & 3 will continue to run, the sequencer will start pumps 2 & 4.**

b. CCW pumps 1 & 3 will be shed from their bus, then the sequencer will start pumps 1, 2, 3 & 4.

c. CCW pumps 1 & 3 will continue to run, the sequencer will start pumps 2, 4, 5 & 6.

d. CCW pumps 1 & 3 will continue to run; pumps 2 & 4 will not start.

LO-LP-10101-10
Briefly describe the general operation of the CCW System for the following plant conditions:

a. startup
b. normal operations
c. emergency conditions
d. single pump operation

LO-LP-10101-10-03
Train A Component Cooling Water is in service with pumps #3 and #5 running when a Safety Injection occurs. Which of the following best describes the configuration of the "A" train Component Cooling Water pumps approximately one (1) minute after the SI?

A. Only CCW pumps #1 and #3 will be running.

B. Only CCW pumps #3 and #5 will be running.

C. CCW pumps #1, #3, and #5 will be running.

D. No CCW pumps will be running.

LO-LP-10101-10
Briefly describe the general operation of the CCW System for the following plant conditions:

a. startup
b. normal operations
c. emergency conditions
d. single pump operation

LO-LP-10101-05-01
The following conditions exist for Unit 1:

* The unit is in mode ~~4~~, 3

* Both trains of RHR are in service for RCS cooldown,

* CCW pumps 1, 2, 3, and 6 are running, (A B A B)

* CCW pump 4 is in ~~Pull-to-Lock (PTL) and hold tagged,~~ Auto (B)

* CCW pump 5 is in AUTO (A)

A loss of offsite power occurs coincident with a S.I., both emergency diesel generators start and energize their repective electrical busses ~~on a UV sequence.~~ Which ONE of the following is the correct CCW system response? & Reason

A. Pumps 1, 2, and 3 restart automatically by the UV sequence, pump 6 must be manually started.

B. All CCW pumps must be manually restarted after the UV sequence, they are designed to start only on an SI sequence.

C. Pumps 1, 2, 3, and 6 restart automatically on the UV sequence.

D. Pumps 1, 2, 3, and 6 restart automatically on low discharge header pressure as soon as power is restored.

LO-LP-10101-05
Describe the auto start features of the CCW standby pumps.

A. Pumps 1, 2 & 3 start @ 20.5 seconds and Pumps 5 & 6 will start @ 25.5 sec due to pump 4 not starting.

B. Pumps 1, 2, and 3 start @ 20.5 seconds and Pumps 5 & 6 will not @ 25.5 seconds due to pump 4 low discharge P.

✓ C. Pumps 1, 2, and 3 (A B A) start @ 20.5 seconds and Pumps ~~5~~ 6 will start @ 25.5 seconds due to pump 4 not starting. (Pump 5 does not auto start)

D. Pumps 1, 2, and 3 start @ 20.5 seconds and Pump 6 will start @ 25.5 seconds due to pump 4 low discharge P. (Pump 5 does not auto start)

E. Pump 1, 2, and 3 start @ 20.5 seconds and Pump 6 must be manually started

26. 026K4.09 001

Which ONE of the following design features prevents radioactivity from escaping containment when the RWST EMPTY LEVEL alarm annunciates?

A. ✓ Check valve located on the RWST suction line to the containment spray pumps.

B. Interlock on the containment emergency sump suction valve to the containment spray pump.

C. Automatic closure of the containment spray pump minimum flow valves that discharge to the RWST.

D. CCP swap to RWST on VCT low level is automatically blocked.

K/A
026 Containment Spray
K4.09 Knowledge of CSS design feature(s) and / or interlock(s) which provide for the following: Prevention of path for escape of radioactivity from containment to the outside (interlock on RWST isolation after swapover).

K/A MATCH ANALYSIS
The check valve is a design feature that prevents radioactivity from reaching the RWST when in recirc mode from the sump.

ANSWER / DISTRACTOR ANALYSIS
A. Correct. P&ID 1X4DB131,Containment Spray System, Rev. 31, coordinate D-3, displays the check valve to support the correct answer.
B. Incorrect. No interlock exists on the suction valves from the sump. Plausible because an interlock, such as RWST suctions closed, would make sense when trying to limit radioactivity release.
C. Incorrect. The lines are isolated with locked closed valves. P&ID 1X4DB131,Containment Spray System, Rev. 31, coordinate B-4 / H-5, displays the LC valves. Plausible because these lines are a potential path back to the RWST.
D. Incorrect. There are no automatic blocks - procedural actions are required (see V-LO-TX-13101 Page 24). Plausible because these actions are required, although they do not occur automatically.

REFERENCES
1. P&ID 1X4DB121, Safety Injection System, Rev. 35.
2. P&ID 1X4DB131,Containment Spray System, Rev. 31.
3. V-LO-TX-13101, Emergency Core Cooling System, Rev. 2.0.
4. V-LO-TX-15101, Containment Spray System, rev. 2.0.
5. 17006-1, Window E05, RWST EMPTY LEVEL, Rev. 28.

MCS Time: 1 Points: 1.00 Version: 0 1 2 3 4 5 6 7 8 9
Answer: A B B A B D B D C C Scramble Range: A - D

QUESTIONS REPORT
for Voglte 2005-301 Draft

Tier:	2	Group:	1
Key Word:	RWST RECIRC RADIOACT	Cog Level:	MEM 3.7
Source:	N	Exam:	VG05301
Test:	R	Author/Reviewer:	MAB/RSB

26. 026K4.09 001

Which ONE of the following design features prevents radioactivity from escaping containment when the RWST EMPTY LEVEL alarm annunciates?

A. Check valve located on the RWST suction line to the containment spray pumps.

B. Interlock on the containment emergency sump suction valve to the containment spray pump.

C. Automatic closure of the containment spray pump minimum flow valves that discharge to the RWST.

D. CCP swap to RWST on VCT low level is automatically blocked.

K/A
026 Containment Spray
K4.09 Knowledge of CSS design feature(s) and / or interlock(s) which provide for the following: Prevention of path for escape of radioactivity from containment to the outside (interlock on RWST isolation after swapover).

K/A MATCH ANALYSIS
The check valve is a design feature that prevents radioactivity from reaching the RWST when in recirc mode from the sump.

ANSWER / DISTRACTOR ANALYSIS
A. Correct. P&ID 1X4DB131,Containment Spray System, Rev. 31, coordinate D-3, displays the check valve to support the correct answer.
B. Incorrect. No interlock exists on the suction valves from the sump. Plausible because an interlock, such as RWST suctions closed, would make sense when trying to limit radioactivity release.
C. Incorrect. The lines are isolated with locked closed valves. P&ID 1X4DB131,Containment Spray System, Rev. 31, coordinate B-4 / H-5, displays the LC valves. Plausible because these lines are a potential path back to the RWST.
D. Incorrect. There are no automatic blocks - procedural actions are required (see V-LO-TX-13101 Page 24). Plausible because these actions are required, although they do not occur automatically.

REFERENCES
1. P&ID 1X4DB121, Safety Injection System, Rev. 35.
2. P&ID 1X4DB131,Containment Spray System, Rev. 31.
3. V-LO-TX-13101, Emergency Core Cooling System, Rev. 2.0.
4. V-LO-TX-15101, Containment Spray System, rev. 2.0.
5. 17006-1, Window E05, RWST EMPTY LEVEL, Rev. 28.

MCS Time: 1 Points: 1.00 Version: 0 1 2 3 4 5 6 7 8 9
Answer: A B B A B D B D C C Scramble Range: A - D

QUESTIONS REPORT
for Vogtle 2005-301 Draft

Tier:	2	Group:	1
Key Word:	RWST RECIRC RADIOACT	Cog Level:	MEM 3.7
Source:	N	Exam:	VG05301
Test:	R	Author/Reviewer:	MAB/RSB

1. 026K4.09 001

Which ONE of the following design features prevents radioactivity from escaping containment when the RWST EMPTY LEVEL alarm annunciates?

A. Check valve located on the RWST suction line to the containment spray pumps.

B. Interlock on the containment emergency sump suction valve to the containment spray pump.

C. Automatic closure of the containment spray pump minimum flow valves that discharge to the RWST.

D. CCP swap to RWST on VCT low level is automatically blocked.

K/A
026 Containment Spray
K4.09 Knowledge of CSS design feature(s) and / or interlock(s) which provide for the following: Prevention of path for escape of radioactivity from containment to the outside (interlock on RWST isolation after swapover).

K/A MATCH ANALYSIS
The check valve is a design feature that prevents radioactivity from reaching the RWST when in recirc mode from the sump.

ANSWER / DISTRACTOR ANALYSIS
A. Correct. P&ID 1X4DB131,Containment Spray System, Rev. 31, coordinate D-3, displays the check valve to support the correct answer.
B. Incorrect. No interlock exists on the suction valves from the sump. Plausible because an interlock, such as RWST suctions closed, would make sense when trying to limit radioactivity release.
C. Incorrect. The lines are isolated with locked closed valves. P&ID 1X4DB131,Containment Spray System, Rev. 31, coordinate B-4 / H-5, displays the LC valves. Plausible because these lines are a potential path back to the RWST.
D. Incorrect. There are no automatic blocks - procedural actions are required (see V-LO-TX-13101 Page 24). Plausible because these actions are required, although they do not occur automatically.

REFERENCES
1. P&ID 1X4DB121, Safety Injection System, Rev. 35.
2. P&ID 1X4DB131,Containment Spray System, Rev. 31.
3. V-LO-TX-13101, Emergency Core Cooling System, Rev. 2.0.
4. V-LO-TX-15101, Containment Spray System, rev. 2.0.
5. 17006-1, Window E05, RWST EMPTY LEVEL, Rev. 28.

MCS Time: 1 Points: 1.00 Version: 0 1 2 3 4 5 6 7 8 9
Answer: A B B A B D B D C C Scramble Range: A - D

QUESTIONS REPORT
for Voglte 2005-301 Draft

Tier:	2	Group:	1
Key Word:	RWST RECIRC RADIOACT	Cog Level:	MEM 3.7
Source:	N	Exam:	VG05301
Test:	R	Author/Reviewer:	MAB/RSB

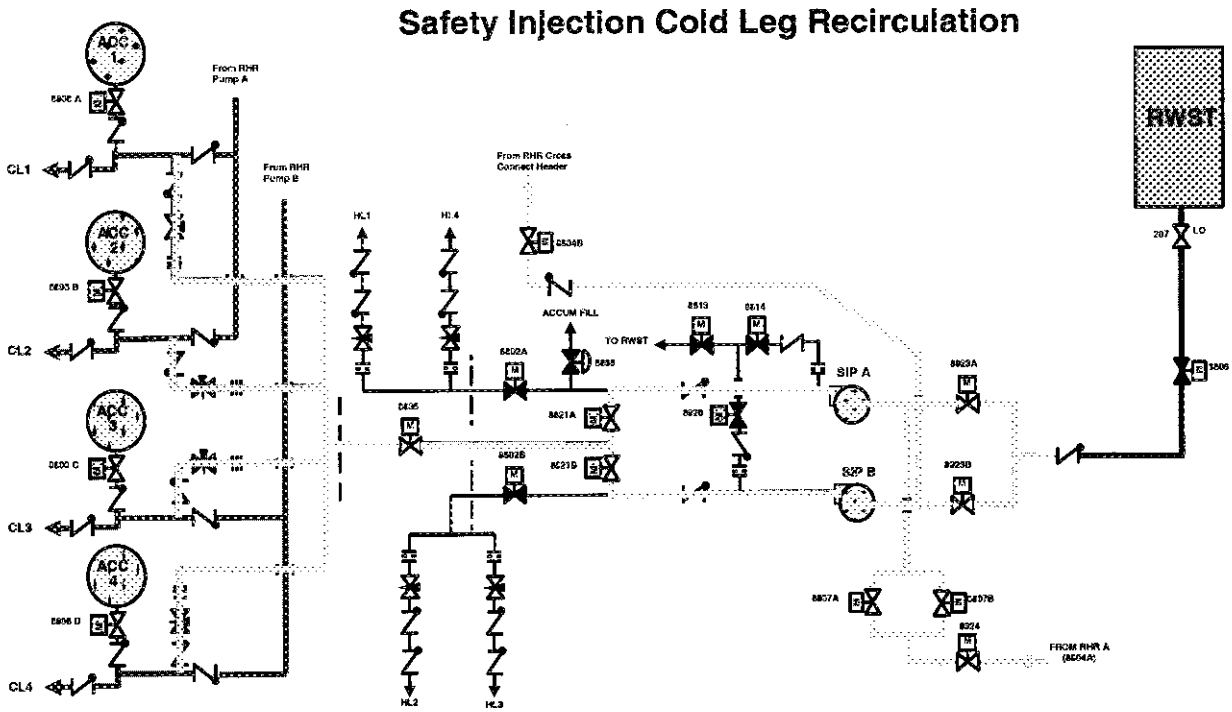

13.9 HIGH HEAD SI COLD LEG RECIRCULATION ALIGNMENT

The High Head Injection system also known as the CCPs are placed in the cold leg recirculation similar as the Intermediate head system. The CCPs continue to inject to all four RCS Cold Legs while its suction source is manually swapped to the RHR supply. Once the suction source has been established from the RHR system, the suction isolation valves from the RWST are isolated (LV-112D&E). The CCPs suctions have auto swap capability on Low-Low VCT level for NPSH protection. Because of this feature there is a potential for the CCP suction isolation valves to re-open on Low-Low VCT level. This in itself is not critical but due to there being only one check located in the suction line from the RWST, a potential exist in which the check valve could fail. This potential check failure coupled with the LV-112D&E being open there could be a flow path from the Containment Sump back to the RWST. To prevent this from occurring, procedure direction is given to the operators to take local control from both Remote Shutdown Panels for LV-112D&E once they are closed. Once local control has been established all interlocks and automatic features are disabled. Not automatically blocked.

Time :

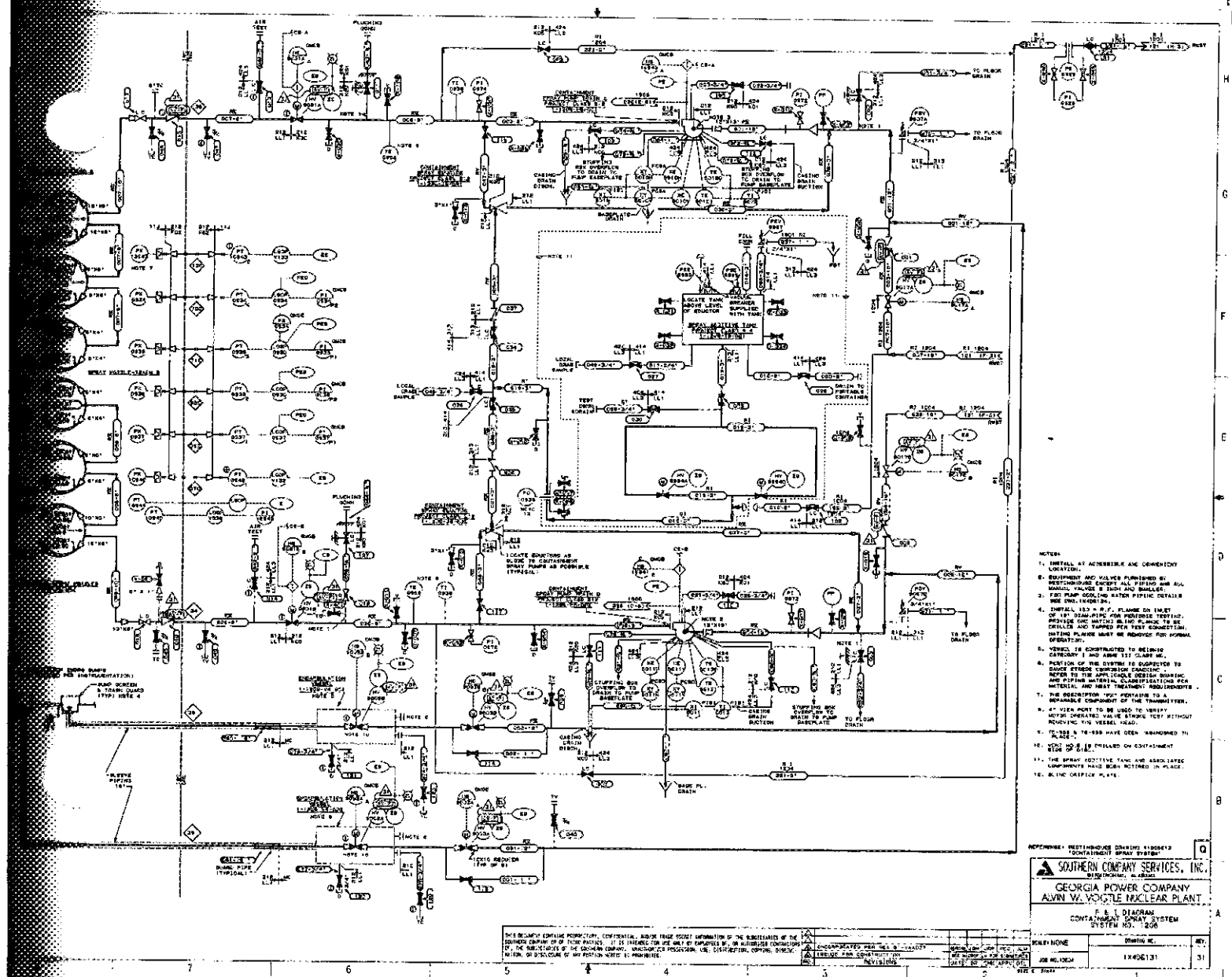

kgroups\SNC Southern Nuclear\PlantVogtle\Training\Admin\NRC Exam Materials for HL13\Plant Drawings\P&IDs\1X4DB131.cal

WINDOW E05

ORIGIN	SETPOINT
1-LT-0990 1-LT-0991 1-LT-0992 1-LT-0993	10% (1/4 channels)

RWST
EMPTY LEVEL

1.0 PROBABLE CAUSE

1. Refueling Water Storage Tank (RWST) in use for Safety Injection (SI).

2. RWST in use for refueling.

3. System leakage.

2.0 AUTOMATIC ACTIONS

NONE

3.0 INITIAL OPERATOR ACTIONS

NOTE

Actions for RWST empty level during SI are governed by 19013-C, "ES-1.3 Transfer to Cold Leg Recirculation".

4.0 SUBSEQUENT OPERATOR ACTIONS

1. While in Modes 5 or 6 and the RCS or Reactor cavity filling operations are not in progress, DISPATCH personnel to locate and isolate the leak.

2. While in Modes 5 or 6, RWST level should be maintained greater than 5%. Makeup to the RWST, if necessary, per 13701-2, "Boric Acid System".

3. REFER to Technical Requirements Manual TR 13.1.6.

5.0 COMPENSATORY OPERATOR ACTIONS

NONE

END OF SUB-PROCEDURE

REFERENCES: 1X4DB121, PLS, 1X5DT0066, 1X6AU01-201, 1X6AU01-380, 1X6AV01-242

27. 027AK3.03 001

A Unit 2 RCS cooldown is in progress at 50 °F/hr in accordance with 19002-C, ES-0.2 Natural Circulation Cooldown.

Which ONE of the following describes the reason for maintaining temperature and pressure within the limits of Technical Specification LCO 3.4.3 (PTLR)?

A. To prevent DNB limits from being exceeded.

B. To maintain RCS pressure at an acceptable value to allow a restart of an RCP.

C. To maintain the RCS at a temperature and pressure to prevent a safety injection.

D. To maintain the RCS temperature and pressure within limits to prevent upper head voiding.

K/A
027 Pressurizer Pressure Control System Malfunction
AK3.03 Knowledge of the reasons for the following responses as they apply to the Pressurizer Pressure Control Malfunctions: Actions contained in EOP for PZR PCS malfunction.

K/A MATCH ANALYSIS
The PCS malfunction is that forced circ is not available; therefore, the normal pzr sprays will not function. The question tests the reason for restrictions associated with performing a NC cooldown iaw ES-0.2.

ANSWER / DISTRACTOR ANALYSIS
A. Incorrect. Plausible because DNB is dependent on temp anf press.
B. Incorrect. Plausible because press is part of criteria for running RCPs.
C. Incorrect. Plausible because SI can occur due to low press.
D. Correct. See referenced lesson plan and first page of referenced procedure.

REFERENCES
1. 19002-C, ES-0.2 Natural Circulation Cooldown, Rev. 18.1, 02/06/2001.
2. LO-LP-37012-14-C, Natural Circulation Cooldown, Rev. 14, 09/22/1999.
3. VCSummer 2004-301 Exam RO Question 027AK3.03.

MCS Time: 1 Points: 1.00 Version: 0 1 2 3 4 5 6 7 8 9
Answer: D B D C D C C C C A Scramble Range: A - D

Tier:	1	Group:	1
Key Word:	COOLDOWN LIMITS NC	Cog Level:	MEM 3.7
Source:	B	Exam:	VG05301
Test:	R	Author/Reviewer:	MAB/RSB

27. 027AK3.03 001

A Unit 2 RCS cooldown is in progress at 50 °F/hr in accordance with 19002-C, ES-0.2 Natural Circulation Cooldown.

Which ONE of the following describes the reason for maintaining temperature and pressure within the limits of Technical Specification LCO 3.4.3 (PTLR)?

A. To prevent DNB limits from being exceeded.

B. To maintain RCS pressure at an acceptable value to allow a restart of an RCP.

C. To maintain the RCS at a temperature and pressure to prevent a safety injection.

D. To maintain the RCS temperature and pressure within limits to prevent upper head voiding.

K/A
027 Pressurizer Pressure Control System Malfunction
AK3.03 Knowledge of the reasons for the following responses as they apply to the Pressurizer Pressure Control Malfunctions: Actions contained in EOP for PZR PCS malfunction.

K/A MATCH ANALYSIS
The PCS malfunction is that forced circ is not available; therefore, the normal pzr sprays will not function. The question tests the reason for restrictions associated with performing a NC cooldown iaw ES-0.2.

ANSWER / DISTRACTOR ANALYSIS
A. Incorrect. Plausible because DNB is dependent on temp anf press.
B. Incorrect. Plausible because press is part of criteria for running RCPs.
C. Incorrect. Plausible because SI can occur due to low press.
D. Correct. See referenced lesson plan and first page of referenced procedure.

REFERENCES
1. 19002-C, ES-0.2 Natural Circulation Cooldown, Rev. 18.1, 02/06/2001.
2. LO-LP-37012-14-C, Natural Circulation Cooldown, Rev. 14, 09/22/1999.
3. VCSummer 2004-301 Exam RO Question 027AK3.03.

MCS	Time:	1	Points:	1.00	Version:	0 1 2 3 4 5 6 7 8 9	
					Answer:	D B D C D C C C C A	Scramble Range: A - D
Tier:		1			Group:	1	
Key Word:		COOLDOWN LIMITS NC			Cog Level:	MEM 3.7	
Source:		B			Exam:	VG05301	
Test:		R			Author/Reviewer:	MAB/RSB	

QUESTIONS REPORT
for Voglte 2005-301 Draft

1. 027AK3.03 001

A Unit 2 RCS cooldown is in progress in accordance with 19002-C, ES-0.2 Natural Circulation Cooldown. at 50°F/hr

Which ONE of the following describes the reason for maintaining temperature and pressure within the limits of Technical Specification LCO 3.4.3 (PTLR)?

A. To prevent DNB limits from being exceeded.

B. To maintain RCS pressure at an acceptable value to allow a restart of an RCP.

C. To maintain the RCS at a temperature and pressure to prevent a safety injection.

D. To maintain the RCS temperature and pressure within limits to prevent upper head voiding.

K/A
027 Pressurizer Pressure Control System Malfunction
AK3.03 Knowledge of the reasons for the following responses as they apply to the Pressurizer Pressure Control Malfunctions: Actions contained in EOP for PZR PCS malfunction.

K/A MATCH ANALYSIS
The PCS malfunction is that forced circ is not available; therefore, the normal pzr sprays will not function. The question tests the reason for restrictions associated with performing a NC cooldown iaw ES-0.2.

ANSWER / DISTRACTOR ANALYSIS
A. Incorrect. Plausible because DNB is dependent on temp anf press.
B. Incorrect. Plausible because press is part of criteria for running RCPs.
C. Incorrect. Plausible because SI can occur due to low press.
D. Correct. See referenced lesson plan and first page of referenced procedure.

REFERENCES
1. 19002-C, ES-0.2 Natural Circulation Cooldown, Rev. 18.1, 02/06/2001.
2. LO-LP-37012-14-C, Natural Circulation Cooldown, Rev. 14, 09/22/1999.
3. VCSummer 2004-301 Exam RO Question 027AK3.03.

MCS	Time:	1	Points:	1.00	Version:	0 1 2 3 4 5 6 7 8 9	
					Answer:	D B D C D C C C C A	Scramble Range: A - D

Tier:	1	Group:	1
Key Word:	COOLDOWN LIMITS NC	Cog Level:	MEM 3.7
Source:	B	Exam:	VG05301
Test:	R	Author/Reviewer:	MAB/RSB

EMERGENCY OPERATING PROCEDURE

ES-0.2 NATURAL CIRCULATION COOLDOWN

PURPOSE

PRB REVIEW REQUIRED

This procedure provides actions to perform a natural circulation RCS cooldown and depressurization to cold shutdown, with no accident in progress, under requirements that will preclude any upper head void formation. (Applicable in Modes 1, 2, and 3.)

MAJOR ACTIONS

- Try to Start an RCP.
- Cool Down and Depressurize RCS With No Upper Head Void Growth.
- Lock Out SI System.
- Place RHR System in Service.
- Cool Down to Cold Shutdown.

ENTRY CONDITIONS

- 19001-C, ES-0.1 REACTOR TRIP RESPONSE, Step 14.
- 19003-C, ES-0.3 NATURAL CIRCULATION COOLDOWN WITH VOID IN VESSEL (WITH RVLIS), Step 1.
- 19004-C, ES-0.4 NATURAL CIRCULATION COOLDOWN WITH VOID IN VESSEL (WITHOUT RVLIS), Step 1.
- 19101-C, ECA-0.1 LOSS OF ALL AC POWER RECOVERY WITHOUT SI REQUIRED, Step 20.

VOGTLE ELECTRIC GENERATING PLANT

TRAINING LESSON PLAN

TITLE:	Natural Circulation Cooldown	NUMBER:	LO-LP-37012-14-C
PROGRAM:	Licensed Operator	REVISION:	14
SME:	Perry Tucker	DATE:	August 16, 1999
APPROVED:	***D. Scukanec***	DATE:	9/22/99

INSTRUCTOR GUIDELINES:

I. LESSON FORMAT

A. Verbal lecture with visual aids

II. MATERIALS

A. Overhead projector

B. Transparencies

C. White board with markers

III. EVALUATION

A. Oral or written exam in conjunction with other lesson plans

IV. REMARKS

A. Ensure students have latest revision of EOP

B. Performance-based instructional units (IUs) are attached to the lesson plan as student handouts. After the lecture on Natural Circulation Cooldown, the student should be given adequate self-study time for the IUs. The instructor should direct self-study activities and be available to answer questions that may arise concerning the IU material. After self-study, the student will perform, simulate, observe, or discuss (as identified on the cluster signoff criteria list) the task covered in the instructional unit in the presence of an evaluator.

III. LESSON OUTLINE: NOTES

I. INTRODUCTION

A. This lesson will give the student a general knowledge of:

1. ES-0.2 Natural circulation cooldown

2. ES-0.3 NC C/D with steam void (with RVLIS)

3. ES-0.4 NC C/D with steam void (without RVLIS)

B. Present Lesson Objectives — LO-TP-37012-001

II. PRESENTATION

A. Basis and Effects

1. Natural circulation cooldown - is to cool down and depressurize the RCS under NC conditions and not draw a void with upper head region — Objective 4

2. Natural circulation cooldown with steam void in vessel (with and without RVLIS) - is to recognize that an upper head void will form and then prepare for and monitor this growth during C/D and depressurization

3. Effects of a loss of forced coolant flow

a. Immediate effects — Objective 1

1) If at power - rapid increase in coolant temperature and pressure

b. Long-term effects

1) Parameters will eventually stabilize when NC is established

2) After NC is established parameters begin decreasing as decay heat decreases

4. Verification of natural circulation flow — LO-TP-37012-003

a. Found on attachment D to 19001-C (memorize 5 conditions)

b. Do not confuse verification of NC with factors that enhance NC flow

1) Core delta T less than or equal to full power forced flow delta T

2) SG level maintained 10 to 65%

3) Pressurizer level greater than or equal

QUESTIONS REPORT

for Westinghouse 3 Loop Questions

1. 027AK3.03 001

An RCS Cooldown is in progress in accordance with EOP-1.3, "Natural Circulation Cooldown."

Which ONE of the following describes the reason for maintaining pressure within the limits of Attachment 1, "RCS P/T LIMITS DURING NATURAL CIRCULATION COOLDOWN WITH CRDM FANS?"

A. This curve is designed to prevent DNB limits from being exceeded.

B. This curve maintains RCS pressure at an acceptable value to allow a restart of an RCP.

C. This curve is designed to maintain the RCS at a temperature and pressure to prevent an SI.

D. This curve maintains RCS temperature and pressure limits to prevent upper head voiding.

K/A changed from AK3.01 due to not having spray isolation valves. Bank question from old Surry Exam. (Spray valves not being available is the PCS system malfunction).
Summer Objective EOP-1.3 Lesson Plan # 1798.

A, B, and C, Incorrect, these are not the reasons for this attachment.

D. Correct the curve is designed to limit upper head voiding.

MCS Time: 1 Points: 1.00 Version: 0 1 2 3 4 5 6 7 8 9

Answer: D B D A A A B C D D Scramble Range: A - D

RO Tier:	1	SRO Tier:	1
K/A Value:	PZR SPRAY/HTRS	Cog. Level:	M 3.7/4.1
Source:	BANK	Exam:	SM04301
Test:	R	Misc:	GWL

28. 032AK2.01 001

The following Unit 1 conditions exist:

- The reactor is stable at the point-of-adding-heat.
- Reactor Physics testing is in progress.
- Power Range Channel N-44 is in trip with the reactivity recorder installed.
- A fault occurs that results in a loss of Bus 1AY1A.

Which ONE of the following describes the effect on the source range indications and the reason for the indications?

A. Source Range Channels N-31 and N-32 will remain energized and their indications will remain stable.

B. Source Range Channels N-31 and N-32 will remain energized and their indications will decrease.

C. Source Range Channel N-31 will de-energize and N-32 indication will remain stable.

D✓ Source Range Channel N-31 will de-energize and N-32 indication will decrease.

UTILITY NEEDS TO SUPPLY REFERENCES AND VERIFY TECHNICAL ACCURACY.

K/A
032 Loss of Source Range
AK2.01 Knowledge of the interrelations between the Loss of Source Range Nuclear Instrumentation and the following: Power supplies, including power switch positions.

K/A MATCH ANALYSIS
Question tests knowledge of how losing a power supply will affect the SR indications.

ANSWER / DISTRACTOR ANALYSIS
A. Incorrect. N-31 will de-energize. Plausible because applicant may not know the power supply.
B. Incorrect. N-31 will de-energize. Plausible because applicant may not know the power supply.
C. Incorrect. N-32 indication will lower because Rx trips because IR also loses power. Plausible because applicant may not understand that the reactor will also trip, thereby causing N-32 indication to lower.
D. Correct. N-31 de-energizes and N-32 indication lowers because the IR also loses power, which trips the reactor.

REFERENCES
1. V-LO-TX-28101, RPS-SSPS-AMSAC, Rev. 3.
2. V-LO-TX-17201, Source and Intermediate Range, Rev. 1.
3. V-LO-TX-01101, Electrical Distribution, Rev. 2.
4. Surry Exam Question SR02301.

MCS	Time:	1	Points:	1.00	Version:	0 1 2 3 4 5 6 7 8 9	
					Answer:	D D C C A A C C D B	Scramble Range: A - D
Tier:		1			Group:	2	
Key Word:		SOURCE RANGE POWER			Cog Level:	C/A 2.7	
Source:		B			Exam:	VG05301	
Test:		R			Author/Reviewer:	MAB/RSB	

28. 032AK2.01 001

The following Unit 1 conditions exist:

- The reactor is stable at the point-of-adding-heat.
- Reactor Physics testing is in progress.
- Power Range Channel N-44 is in trip with the reactivity recorder installed.
- A fault occurs that results in a loss of Bus AY1A.

Which ONE of the following describes the effect on the source range indications and the reason for the indications?

A. Source Range Channel N-31 will re-energize and N-32 will remain de-energized due to the loss of Bus AY1A.

B. Source Range Channels N-31 and N-32 will remain de-energized because the P-6 interlock cannot be reset due to the loss of power to N-36.

C. Source Range Channel N-32 will remain de-energized due to the P-10 interlock and N-31 will have no power due to the loss of Bus AY1A.

D. Source Range Channel N-31 will remain de-energized due to the P-10 interlock and N-32 will re-energize.

K/A
032 Loss of Source Range
AK2.01 Knowledge of the interrelations between the Loss of Source Range Nuclear Instrumentation and the following: Power supplies, including power switch positions.

K/A MATCH ANALYSIS
Question tests knowledge of how losing a power supply will affect the SR indications.

ANSWER / DISTRACTOR ANALYSIS
A. Incorrect. N-31 will not re-energize due to P-10. Plausible because second part of distractor is correct and applicant may think N-31 will re-energize as it normally would on a reactor trip.
B. Incorrect. N-36 did not lose power. Plausible because P-6 resets when 2 out of 2 IR NIs are < $7x10^{-6}$%. In this instance, only N-35 will fall below $7x10^{-6}$%, thus making up only half of the P-6 logic and preventing a reset of P-6.
C. Correct. P-10 is energized because of the PR NI in trip due to the reactivity computer and the faulted power supply which supplies another PR NI (2/4 logic). This situation will create a reactor trip without energization of the SR NIs. It may also be worth noting that SR NIs are de-energized at POAH.
D. Incorrect. N-32 will not re-energize due to the P-10 interlock. Plausible because applicants may confuse power supplies.

REFERENCES
1. V-LO-TX-28101, RPS-SSPS-AMSAC, Rev. 3.
2. V-LO-TX-17201, Source and Intermediate Range, Rev. 1.
3. V-LO-TX-01101, Electrical Distribution, Rev. 2.
4. Surry Exam Question SR02301.

MCS Time: 1 Points: 1.00 Version: 0 1 2 3 4 5 6 7 8 9
Answer: C D D A B D C A C C Scramble Range: A - D

Tier:	1	Group:	2
Key Word:	SOURCE RANGE POWER	Cog Level:	C/A 2.7
Source:	B	Exam:	VG05301
Test:	R	Author/Reviewer:	MAB/RSB

2. 032AK2.01 001

The following Unit 1 conditions exist:

- The reactor is stable at the point-of-adding-heat.
- Reactor Physics testing is in progress.
- Power Range Channel N-44 is in trip with the reactivity recorder installed.
- A fault occurs that results in a loss of Bus AY1A.

Which ONE of the following describes the effect on the source range indications and the reason for the indications?

A. Source Range Channel N-31 will re-energize and N-32 will remain de-energized due to the loss of Bus AY1A.

B. Source Range Channels N-31 and N-32 will remain de-energized because the P-6 interlock cannot be reset due to the loss of power to N-36.

C. Source Range Channel N-32 will remain de-energized due to the P-10 interlock and N-31 will have no power due to the loss of Bus AY1A.

D. Source Range Channel N-31 will remain de-energized due to the P-10 interlock and N-32 will re-energize.

K/A
032 Loss of Source Range
AK2.01 Knowledge of the interrelations between the Loss of Source Range Nuclear Instrumentation and the following: Power supplies, including power switch positions.

K/A MATCH ANALYSIS
Question tests knowledge of how losing a power supply will affect the SR indications.

ANSWER / DISTRACTOR ANALYSIS
A. Incorrect. N-31 will not re-energize due to P-10. Plausible because second part of distractor is correct and applicant may think N-31 will re-energize as it normally would on a reactor trip.
B. Incorrect. N-36 did not lose power. Plausible because P-6 resets when 2 out of 2 IR NIs are < $7x10^{-6}$%. In this instance, only N-35 will fall below $7x10^{-6}$%, thus making up only half of the P-6 logic and preventing a reset of P-6.
C. Correct. P-10 is energized because of the PR NI in trip due to the reactivity computer and the faulted power supply which supplies another PR NI (2/4 logic). This situation will create a reactor trip without energization of the SR NIs. It may also be worth noting that SR NIs are de-energized at POAH.
D. Incorrect. N-32 will not re-energize due to the P-10 interlock. Plausible because applicants may confuse power supplies.

REFERENCES
1. V-LO-TX-28101, RPS-SSPS-AMSAC, Rev. 3.
2. V-LO-TX-17201, Source and Intermediate Range, Rev. 1.
3. V-LO-TX-01101, Electrical Distribution, Rev. 2.
4. Surry Exam Question SR02301.

MCS Time: 1 Points: 1.00 Version: 0 1 2 3 4 5 6 7 8 9
Answer: C D D A B D C A C C Scramble Range: A - D

Tier:	1	Group:	2
Key Word:	SOURCE RANGE POWER	Cog Level:	C/A 2.7
Source:	B	Exam:	VG05301
Test:	R	Author/Reviewer:	MAB/RSB

SECTION B

REACTOR TRIP AND ESFAS SIGNALS

28.11 PERMISSIVE INTERLOCKS

Permissive interlocks provide input to the protection systems to allow or prevent protective functions from occurring under certain plant conditions.

P-4 **Indicates reactor tripped**

Set point or conditions that give P-4

RTA and its bypass (BYA) both open give P-4 Train A
RTB and its bypass (BYB) both open give P-4 Train B

Function:

1) **Trips** the Main Turbine to limit the RCS cool down

   - P-4 Train A generates a "Mechanical Turbine Trip"

   - P-4 Train B generates an "Electrical Turbine Trip"

2) Steam Dumps

   - P-4 Train A generates a Steam Dump Arming signal

   - P-4 Train B transfers Steam Dump controllers from "Load reject" mode to the "Plant trip" mode

3) **F**eed **W**ater **I**solation (FWI)

   - P-4 in conjunction with Lo Tavg of 564°F

4) Seals in FWI if caused by a Safety Injection or Hi-Hi Steam Generator water level (P-14).

5) SI reset logic

   - After Safety Injection has been reset, P-4 blocks any future automatic safety injection signals.

P-6 **Source Range Block Permissive**

Set point:

2.0 x 10-5% POWER on any **1 / 2** IR NIS detector.

Function:

1) Allows the operator to manually block SR high flux trip.
   (both TRN A and TRN B switches, QMCB-C)

2) Loss of P-6 (either train no SSPS) will automatically unblock the Source Range Trip Permissive status light on BPLP (QMCB-C) Illuminates when P-6 is present.

P-6 Resets:

When 2/2 IR NIS detector drop < **7.0 X 10-6% POWER**

P-7 **Lo Power Trip Block**

Also known as the "At power trip permissive"

Set points - either of the following

1) **≥ 10%** turbine power **1 / 2** Turbine Impulse Pressure (P-13)

or

2) **≥ 10%** power on **2 / 4** Power Range NIS (P-10)

Functions:

Unblocks at power trips

1) Pressurizer low pressure
2) Pressurizer hi level
3) RCP undervoltage
4) RCP underfrequency
5) Two loop loss of flow trip

Permissive status light on BPLP goes out when P-7 is present

P-8 **1 Loop Lo Flow Trip Block**

Set points:

2 / 4 Power Range NIS **≥ 48%** power

P-9 **Turbine Trip / Reactor Trip Blocked**

Set points:

2 / 4 Power Range NIS **≥ 50%** power

Function:

Enables reactor trip when the main turbine trips because of the steam dumps and auto rod control capacity is limited to 50%.

Permissive status light on BPLP goes out when P-9 is present

P-10 **Power Range Permissive**

Set point:

2 / 4 PR NIS ≥ 10% power (resets at 8%)

Functions:

1) Automatically blocks SR hi flux trip
2) Allows manual block of IR high flux trip and rod stop (both TR A and TR B switches to block)
3) Allows manual block of PR high flux trip (low set point) requires both Trn A and Trn B switches to block both trains
4) Provides input for P-7

Permissive status light comes on with P-10 present

P-11 Pressurizer Lo Pressure SI Block Permissive

Set point:

2 / 3 pressurizer pressure channels ≤ 2000 psig

PT-458 not used

Function:

1) Allows manual block of pressurizer low pressure SI (Requires Both TR A and TR B switches to block)

2) Allows manual block of low steam line pressure SI and steam line isolation. This manual block will enable a steam line isolation upon receipt of high steam pressure negative rate signal. (Requires both Train A and B switches to block)

3) Loss of P-11 will send signal to unblock PRZR pressure SI & Low Steam Line Pressure SI/MSLI. Loss of P-11 will also block the MSLI from high steam Negative rate signal.

4) Loss of P-11 sends an open signal to the SI Accumulator outlet valves.

5) Loss of P-11 enables Alarms for Accumulator outlet valves, and SI pump suction valve "Not Full open"

Permissive status light will be on when P-11 present

P-12 Low-Low Tavg Steam Dump Interlock

Set point:

2 / 4 Tavg channels ≤ 550°F

Function:

Auto closes the steam dumps (The block can be overridden for 3 of the 12 steam dumps to be used for plant cool down.)

Permissive status light on BPLP goes out when P-12 is present.

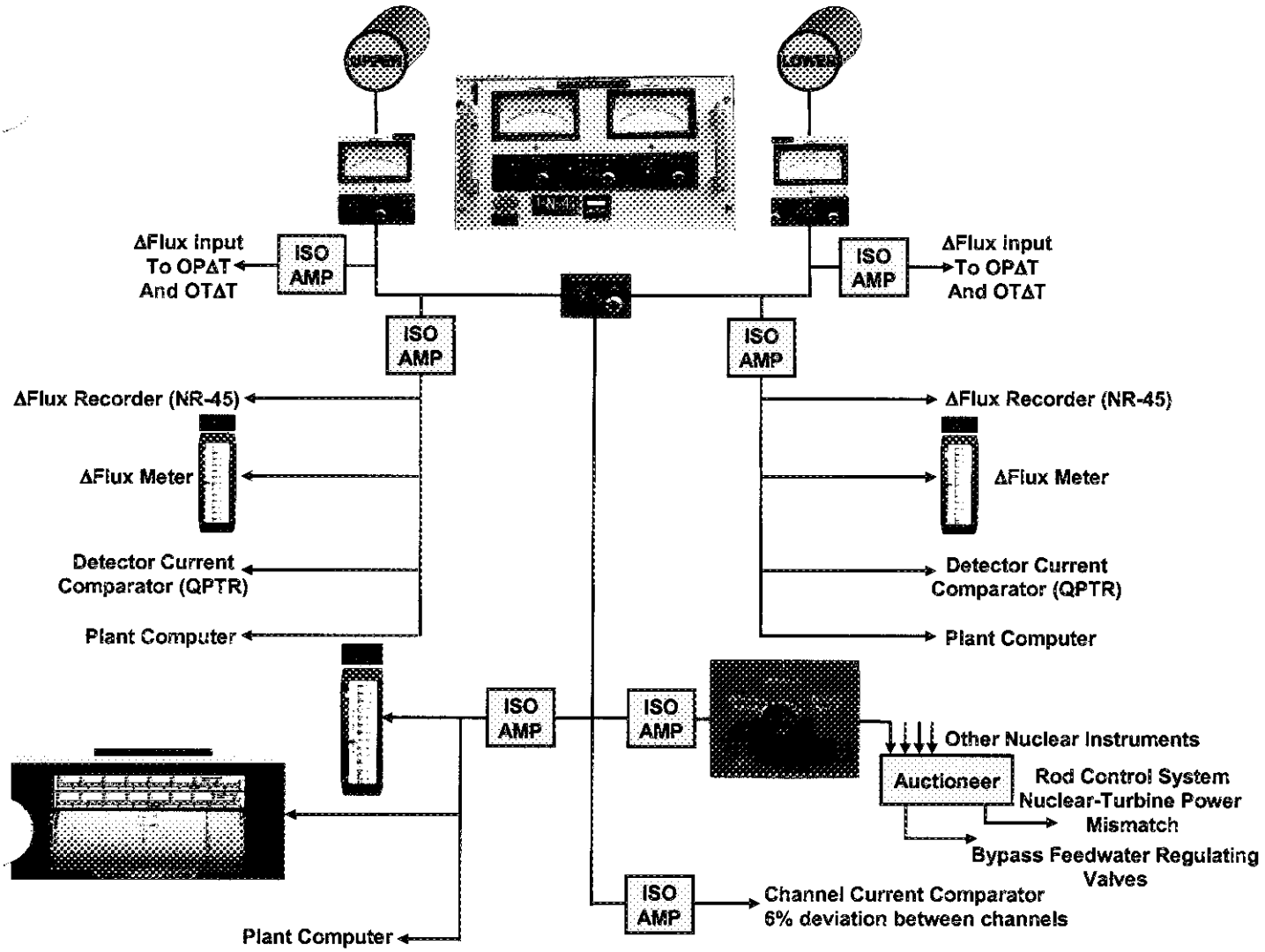

Power Range Bistable Relay Drivers

The entire bistable relay drivers used in the power range is located in drawer A where they can be placed adjacent to their control power-operated isolation transformers. Necessary to operate the bistable electronics, 25 v is supplied from drawer B through a multiconductor cable. This same cable also supplies the output from the summing and level amplifiers, which is used as the input to the bistables and drives the meter and rate circuits.

The bistables and their functions are as follows:

1. [illegible] - Protection interlock bistable which provides a signal to the SSPS when reactor power is greater than 48% to enable a reactor trip if coolant flow is lost to one or more loops. The output of the P-8 bistable is normally energized when below the 48% setpoint. (2/4 Coincidence logic)

2. [illegible] - Protection interlock bistable which provides a signal to the Solid State Protection System (SSPS) when reactor power is above 50%. If a Main Turbine Trip occurs above 50%, the bistable is de-energized, which also causes a Reactor Trip. (2/4 Coincidence logic)

3. [illegible] - Protection interlock bistable which provides a signal to the Solid State Protection System (SSPS) when reactor power is greater than 10% to allow manual blocking of the Intermediate Range "High Flux Level" Reactor Trip and the Power Range "High Flux Level Low Setpoint" Reactor Trip (2/4 Coincidence logic). P-10 also activates a automatic block signal for the Source Range "High Flux Level" Reactor Trip. The output of the P-10 bistable is normally energized when below the 10% setpoint.

4. **"High Neutron Flux"** Reactor Trip high setpoint bistable which provides a signal to the Solid State Protection System (SSPS) when Reactor Power is greater than 109%. This bistable is normally energized below the 109% setpoint. (2/4 Coincidence Logic)

5. **"High Neutron Flux"** Reactor Trip low setpoint bistable which provides a signal to the Solid State Protection System (SSPS) when reactor power is greater than 25%. This bistable is normally energized below the 25% setpoint. (2/4 Coincidence Logic)

6. "High Neutron Flux" Rod Block **(C-2)** bistable which provides a signal to the Process Instrumentation System when Reactor Power is above 105%, which is used to block outward control rod motion. This action is designed to avoid exceeding the 109% "High Flux Level" Reactor Trip. The rod stop bistable is normally energized below the 105% setpoint. (1/4 Coincidence Logic)

7. **"Positive Rate"** Reactor Trip bistable which provides a signal to the Solid State Protection System (SSPS) if Reactor Power undergoes an increase of 5% with a time constant conditioning of 2 seconds. This bistable is normally energized when the rate of change in Reactor Power is below the setpoint. (2/4 Coincidence Logic)

Of the seven bistable relay drivers listed, only one is a control device, the Rod Block bistable. The bistable modules are identical to the others used throughout the Nuclear Instrument System. There is, however, a new feature associated with the rate bistables that has not been discussed thus far; these bistables are latching types.

A latching bistable is one which must be manually reset once tripped. The positive rate bistables are wired through the RATE MODE switch located on the drawer A front panel. Once tripped, they remain tripped until reset by rotating the RATE MODE switch to the RESET position. The RATE MODE switch is spring loaded back to the NORMAL position.

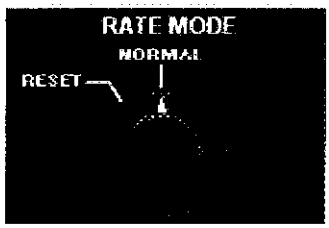

SYSTEM POWER SOURCES

Loss of Control & Instrument Power.

The Gamma-Metrics Neutron Flux Monitoring System power is train separated just like all other safety related protection grade systems in the plant. The N31/35 train is powered from (1/2)AY1A, breaker 3 is **"Control Power"** while Breaker 6 is **"Instrument Power"** to the Main Control Room Signal Processor.

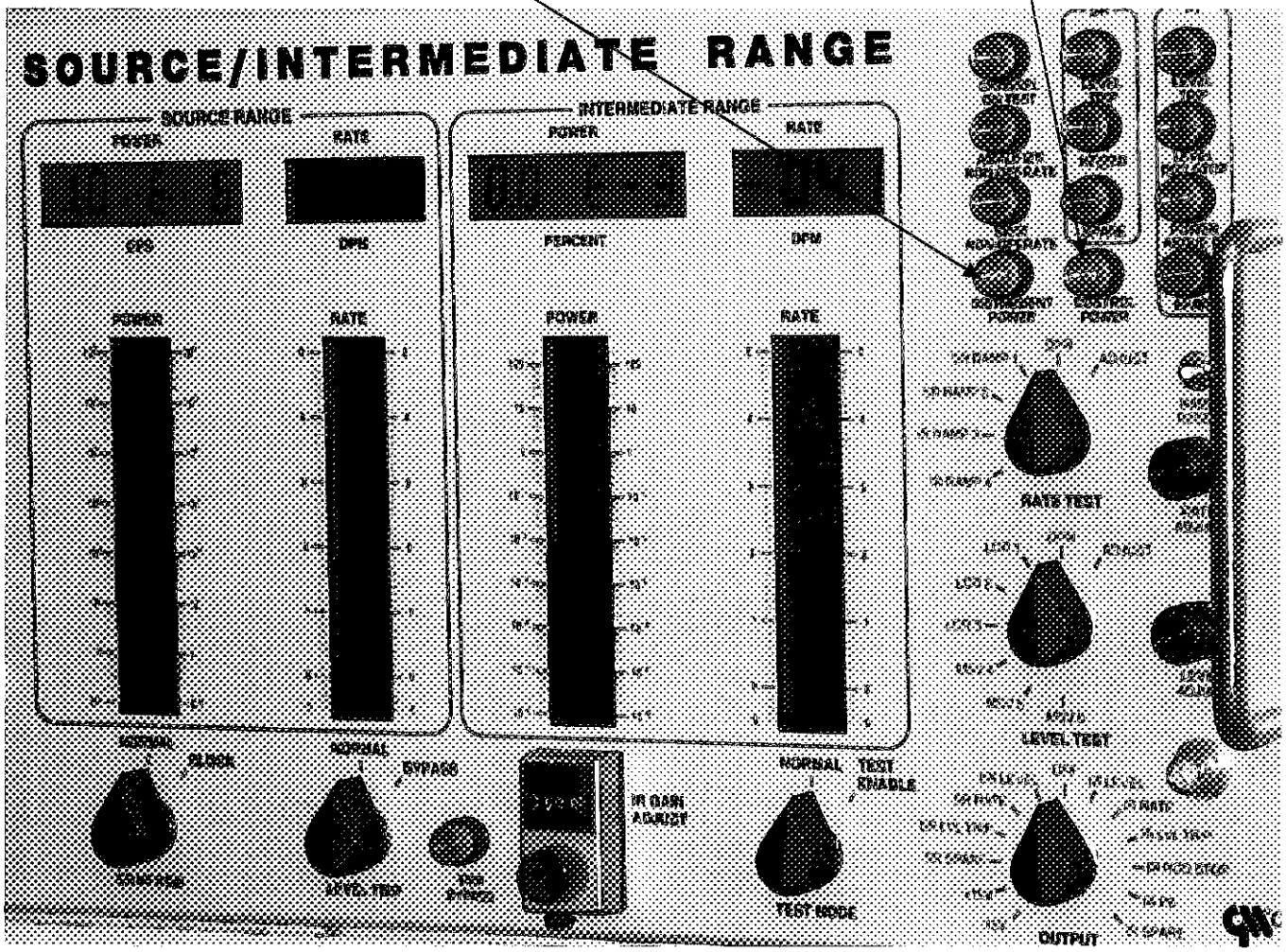

loss of control & instrument power,

The N32/36 train including the Optical Isolator Assembly is powered from (1/2)BY1B, breaker 3 is "Control Power" while Breaker 6 is "Instrument Power" to the Main Control Room Signal Processor. (1/2)BY1B Breaker 12 powers both the Wide Range Amplifier and the Optical Isolator (Train "B" ONLY).

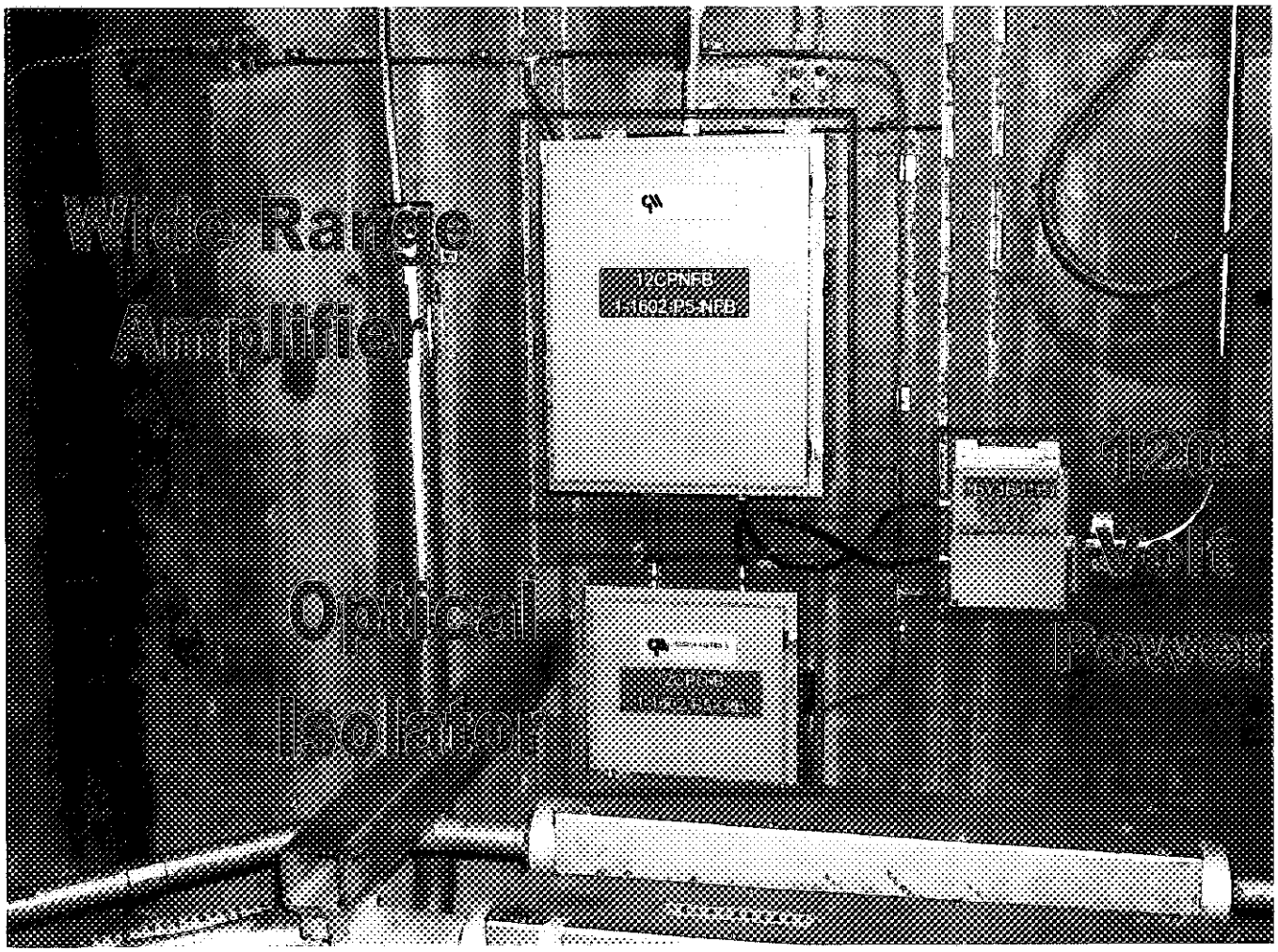

The Appendix R Signal Processor is powered from (1/2)BY2B, breaker 21.

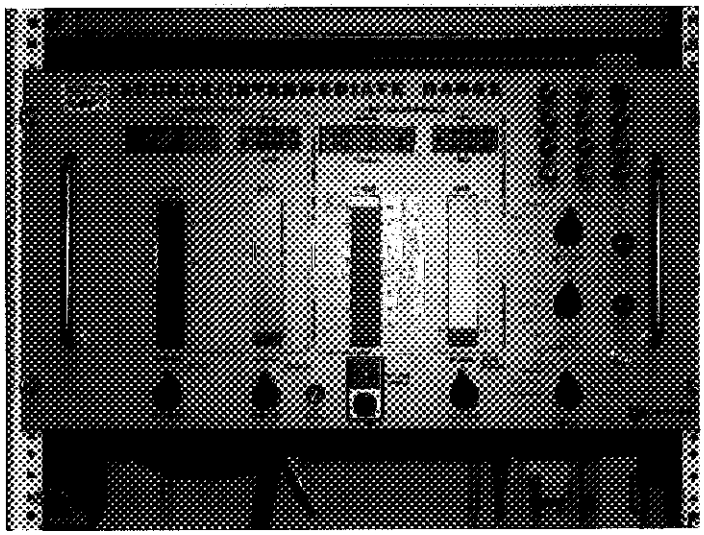

7. (DY1B) 118 vac control power from plant bus no. 3 to NUCLEAR INSTRUMENT SYSTEM bay III

8. (CY1A) 118 vac control power from plant bus no. 4 to NUCLEAR INSTRUMENT SYSTEM bay IV

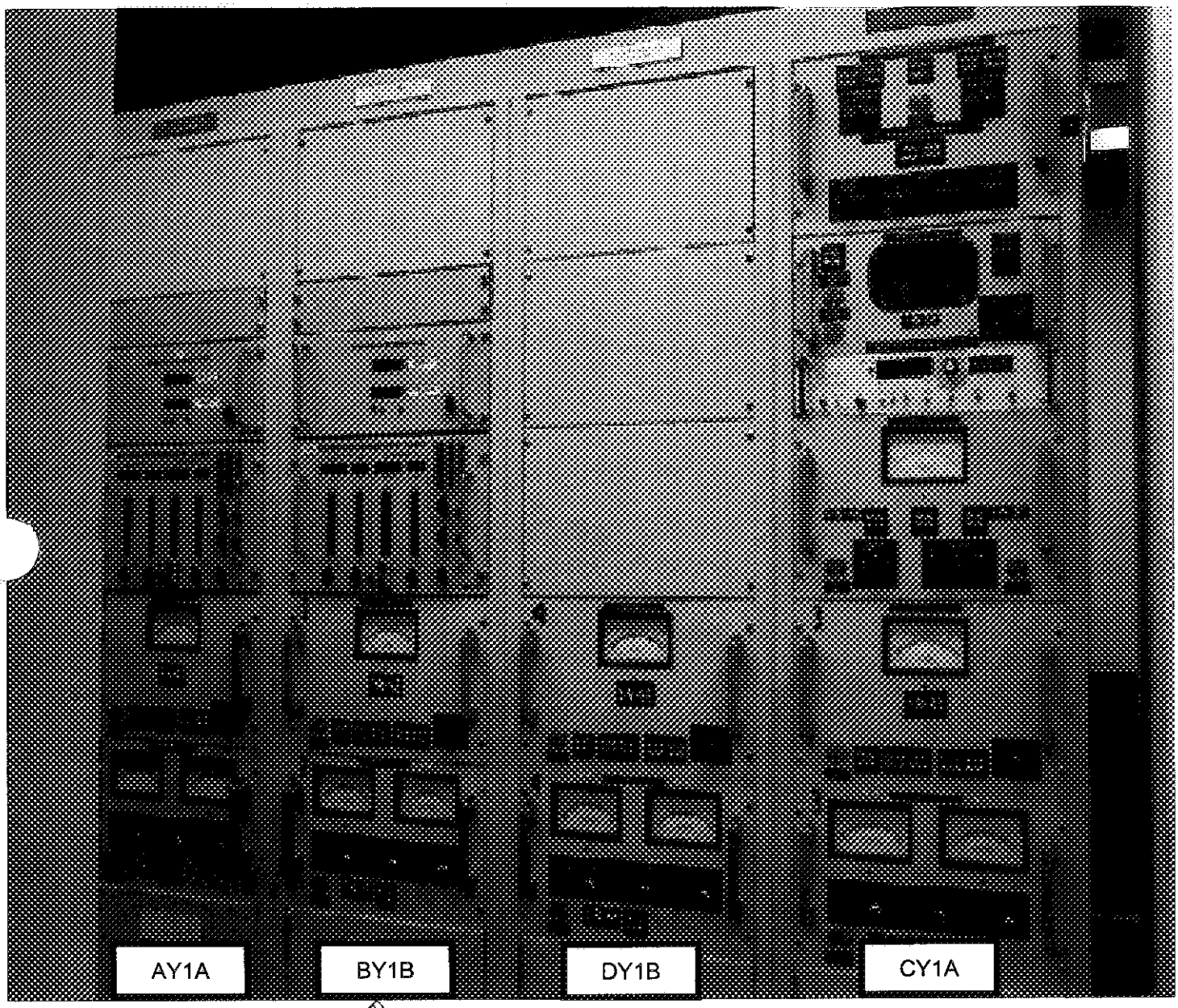

SR N31 SR N32

On loss of Control or Instrument power to the Power Range Nuclear Instruments all the protection functions for that channel go to the tripped (safety position) condition.

Surry Exam Q.

QUESTIONS REPORT
for Westinghouse 3 Loop Questions

1. 032AK2.01 001

Unit 1 -~~Unit 2~~ is stable at the POAH with Physics testing in progress.
-PR channel N-44 is in trip with the reactivity recorder installed . Powered by DY1B
-A fault occurs that results in a loss of ~~Vital Bus (VB) I.~~ AY1A

Which one of the following describes the effect on SR indications and the basis for this?

A. SR channel N-31 will re-energize and N-32 will remain de-energized due to the loss of VB I. AY1A

B. SR channels N-31 and N-32 will remain de-energized since the 2/2 permissive cannot be met due to the loss of power to N-36. 2/2 of what (IR?) Due to P-6

✓ C. SR channel N-32 will remain de-energized due to the P-10 interlock, N-31 will have no power due to the loss of VB I.

D. SR channel N-31 will remain de-energized due to the P-10 interlock, N-32 will re-energize.

Surry Exam Bank question # 1592, Modified
Surry Lesson Plan. ND-90.3-LP-5: ND-93.2-LP-2 Objective D.
A. Incorrect, SR channel N31 will not re-energize.

B. Incorrect, SR channels N-31 and N-32 will remain deenergized but not for the reason listed.

C. Correct, SR channel N-32 will remain deenergized due to P-10, and N31 will remain deenergized due to the loss of the vital bus.

D. Incorrect, SR channel N-31 has no power, and N-32 will not reenergize.

MCS Time: 1 Points: 1.00 Version: 0 1 2 3 4 5 6 7 8 9
Answer: C A C B D D B D B A Scramble Range: A - D

RO Tier:	T1G2	SRO Tier:	T1G2
K/A Value:	SR & IR	Cog. Level:	C/A 2.7/3.1
Source:	M	Exam:	SR02301
Test:	C	Misc:	GWL

Surry
IR N-35 N-31 ⇒ VB-1 (Fault)
IR N-36 N-32 ⇒ VB-2
PR N-41 ⇒ VB-1 (Fault)
42 ⇒ VB-2
43 ⇒ VB-3
44 ⇒ VB-4 (OOS)

Vogtle
IR N-35 N-31 ⇒ AY1A (Fault)
IR N-36 32 ⇒ BY1B
PR N-41 ⇒ AY1A (Fault)
42 ⇒ BY1B
43 ⇒ CY1A
44 ⇒ DY1B (OOS)

2/4 > P-10 Overrides SR.

29. 034K4.03 001

Operators are performing refueling operations for Unit 2. The following conditons exist:

- Operators have a fuel assembly attached to the mast of the refueling machine suspended about 4 feet from the bottom of the core.
- HOIST LOAD OVERLOAD LIGHT is illuminated red

Which ONE of the following correctly describes what physically must occur in order to get the refueling machine to continue to pull the assembly in the upward direction (Assume all approvals have been obtained and you have received appropriate direction from the SRO)?

A. Place the HOIST JOYSTICK in the UP position. No other actions are required.

B. Place the HOIST JOYSTICK in the UP position while pushing the HOIST LOAD BYPASS PUSHBUTTON.

C. Select operational mode "Manual" followed by placing the HOIST UP/DOWN JOYSTICK in the UP position.

D. Select operational mode "Interlock Override" followed by placing the HOIST UP/DOWN JOYSTICK in the UP position.

K/A
034 Fuel Handling Equipment
K4.03 Knowledge of design feature(s) and / or interlock(s) which provide for the following: Overload protection.

K/A MATCH ANALYSIS
Question requires knowledge of how to over-ride the overload protection.

ANSWER / DISTRACTOR ANALYSIS
A. Incorrect. This will not work with an overload condition. Plausible because this will work without the overload condition.
B. Incorrect. HOIST LOAD BYPASS PUSHBUTTON allows the assembly to be lowered with an underload, but not withdrawn with an overload. Plausible because the pushbutton does bypass an interlock, but not the overload interlock.
C. Incorrect. "Manual" mode does not override the interlocks. Plausible because applicant could have a misconception that "Manual" mode will override interlocks.
D. Correct. In the "Interlock Override" mode all interlocks are inactive.

REFERENCES
1. V-LO-TX-25101, Fuel Handling Systems and Refueling Operations.

QUESTIONS REPORT
for Voglte 2005-301 Draft

MCS Time: 1 Points: 1.00 Version: 0 1 2 3 4 5 6 7 8 9

Answer: D A A B D A D C D D Scramble Range: A - D

Tier:	2	Group:	2
Key Word:	FUEL HANDLING LOADS	Cog Level:	C/A 2.6
Source:	N	Exam:	VG05301
Test:	R	Author/Reviewer:	MAB/RSB

29. 034K4.03 001

Operators are performing refueling operations for Unit 2. The following conditons exist:

- "Shuffle Works" has been completely updated for the fuel movements
- The FUEL (WEIGHT BAND) SELECTION SWITCH is in position "6"
- Operators have a fuel assembly attached to the mast of the refueling machine suspended about 4 feet from the bottom of the core.
- HOIST LOAD OVERLOAD LIGHT is illuminated red

Which ONE of the following correctly describes what the operators must do in order to get the refueling machine to continue to pull the assembly in the upward direction (Assume all approvals have been obtained and you have received appropriate direction from the SRO)?

A. Place the HOIST UP/DOWN JOYSTICK in the UP position in conjunction with no other actions.

B. Place the HOIST UP/DOWN JOYSTICK in the UP position while pushing the HOIST LOAD BYPASS PUSHBUTTON.

C. Select operational mode "Manual" followed by placing the HOIST UP/DOWN JOYSTICK in the UP position.

D. Select operational mode "Interlock Override" followed by placing the HOIST UP/DOWN JOYSTICK in the UP position.

K/A
034 Fuel Handling Equipment
K4.03 Knowledge of design feature(s) and / or interlock(s) which provide for the following: Overload protection.

K/A MATCH ANALYSIS
Question requires knowledge of how to over-ride the overload protection.

ANSWER / DISTRACTOR ANALYSIS
A. Incorrect. This will not work with an overload condition. Plausible because this will work without the overload condition.
B. Incorrect. HOIST LOAD BYPASS PUSHBUTTON allows the assembly to be lowered with an underload, but not withdrawn with an overload. Plausible because the pushbutton does bypass an interlock, but not the overload interlock.
C. Incorrect. "Manual" mode does not override the interlocks. Plausible because applicant could have a misconception that "Manual" mode will override interlocks.
D. Correct. In the "Interlock Override" mode all interlocks are inactive.

REFERENCES
1. V-LO-TX-25101, Fuel Handling Systems and Refueling Operations.

MCS	Time: 1	Points: 1.00	Version:	0 1 2 3 4 5 6 7 8 9			
			Answer:	D A A B D A D C D D		Scramble Range: A - D	
Tier:	2			Group:	2		
Key Word:	FUEL HANDLING LOADS			Cog Level:	C/A 2.6		
Source:	N			Exam:	VG05301		
Test:	R			Author/Reviewer:	MAB/RSB		

3. 034K4.03 001

Operators are performing refueling operations for Unit 2. The following conditons exist:

- "Shuffle Works" has been completely updated for the fuel movements
- The FUEL (WEIGHT BAND) SELECTION SWITCH is in position "6"
- Operators have a fuel assembly attached to the mast of the fuel handling machine, suspended about 4 feet from the bottom of the core. refueling machine (PAR machine)
- HOIST LOAD OVERLOAD LIGHT is illuminated red

Which ONE of the following correctly describes what the operators must do in order to get the fuel handling machine to continue to pull the assembly in the upward direction?
refueling machine

A. Place the HOIST UP/DOWN JOYSTICK in the UP position in conjunction with no other actions.

B. Place the HOIST UP/DOWN JOYSTICK in the UP position while pushing the HOIST LOAD BYPASS PUSHBUTTON.

C. Select operational mode "Manual" followed by placing the HOIST UP/DOWN JOYSTICK in the UP position.

D. Select operational mode "Interlock Override" followed by placing the HOIST UP/DOWN JOYSTICK in the UP position.

After person approvals,

K/A
034 Fuel Handling Equipment
K4.03 Knowledge of design feature(s) and / or interlock(s) which provide for the following: Overload protection.

K/A MATCH ANALYSIS
Question requires knowledge of how to over-ride the overload protection.

ANSWER / DISTRACTOR ANALYSIS
A. Incorrect. This will not work with an overload condition. Plausible because this will work without the overload condition.
B. Incorrect. HOIST LOAD BYPASS PUSHBUTTON allows the assembly to be lowered with an underload, but not withdrawn with an overload. Plausible because the pushbutton does bypass an interlock, but not the overload interlock.
C. Incorrect. "Manual" mode does not override the interlocks. Plausible because applicant could have a misconception that "Manual" mode will override interlocks.
D. Correct. In the "Interlock Override" mode all interlocks are inactive.

REFERENCES
1. V-LO-TX-25101, Fuel Handling Systems and Refueling Operations.

MCS	Time:	1	Points:	1.00	Version:	0 1 2 3 4 5 6 7 8 9	
					Answer:	D A A B D A D C D D	Scramble Range: A - D
Tier:		2			Group:	2	
Key Word:		FUEL HANDLING LOADS			Cog Level:	C/A 2.6	
Source:		N			Exam:	VG05301	
Test:		R			Author/Reviewer:	MAB/RSB	

current mast load, and gripper engagement status. Also provided are some special indications as follows:

- Green bar at the bottom of the moveable mast indicates the gripper is unlatched. Blinking back and forth between green and yellow indicates the gripper is latched.

- Yellow arrow on the end of the red bar points to the numeric indication of gripper height.

- Numbers in black highlighted box indicate the encoder indication of gripper height.

- Gray hoist load box indicates the load on the hoist as provided by mast encoder output. This box changes color with load changes.

  When using these displays entry into a condition that causes an interlock to be put into effect cause a yellow or red ICON(s) to appear on the screen that identifies the interlock(s) in affect. Touching the icon causes information describing the interlock to appear on the screen.

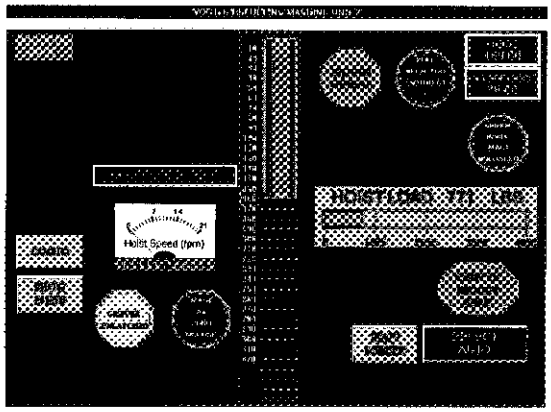

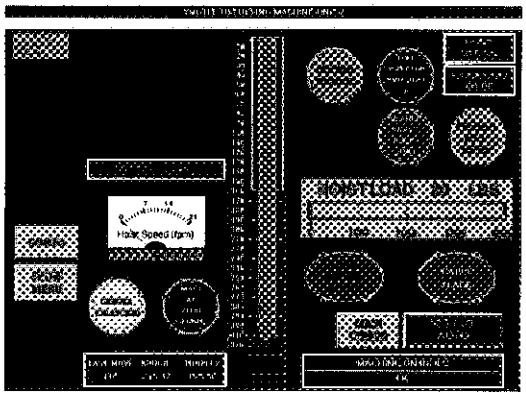

The computer console also has several "Operational Modes" which are described as follows:

- **Manual Step Selection Active**: The computer provides the Programmable Logic Controller (PLC) with the requested core location inputted by the operator. The PLC controls all automatic movement of the bridge and the trolley and all interlocks.

- **Automatic Step Sequencing Active:** The computer provides the Programmable Logic Controller (PLC) with the requested core location from the Shuffle works (PLC) with the requested core location from the Shuffle works Program. The PLC controls all automatic movement of bridge and trolley and all interlocks.

- **Manual:** The operator provides the Programmable Logic Controller (PLC) with all bridge and trolley movement requests by deflecting the joysticks. The PLC controls all movement of bridge and trolley and all interlocks.

- **Interlock Override**: The operator controls all bridge and trolley movement. No interlocks are active.

- **Core Verification Mode:** Modifies the Manual Step Selection Active mode of operation so the mast will be located over the serial number of the selected fuel assembly. This allows the mast camera to be used to view the serial number. Gripper operation is disabled and mast operation below the 305 inch elevation is disabled.

The bridge, trolley, and hoist controls and indicators for the Refueling machine are as follows:

Top Section of Vertical Panel (Left Side)

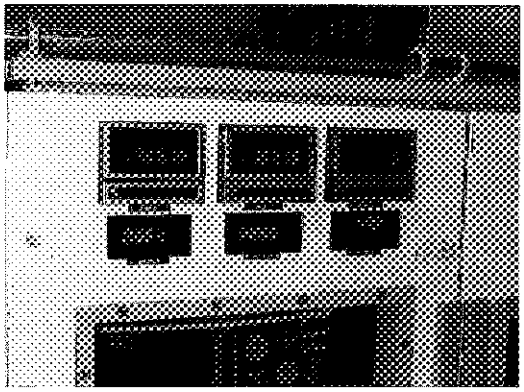

- **BRIDGE POS:** Encoder digital numeric readout of bridge position.

- **TROLLEY POS:** Encoder digital numeric readout of trolley position.

- **HOIST POS:** Encoder digital numeric readout of hoist position.

- **LOAD CELL "A"**: provides digital readout of load on the mast (Primary)

- **LOAD CELL "B"**: Provides secondary digital readout of load on the mast.

- **AIR PRESSURE**: Provides indication of air pressure on the Refueling Machine.

Middle Section of Vertical Panel (Left Side)

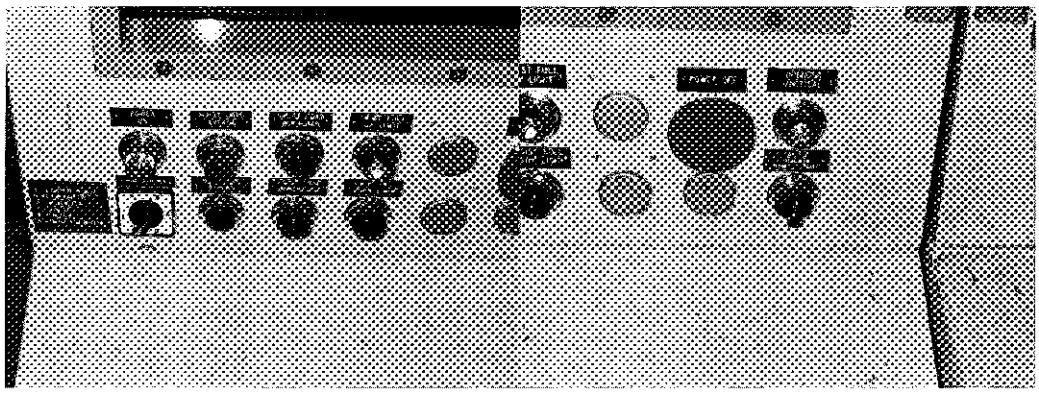

- **POWER ON (RED):** Push button and light. When pushed turns on power from the console to all refueling machine motors.

- **HOIST LOAD BYPASS PUSH-BUTTON (RED) Light**: When there is an assembly on the mast and while depressing this button the hoist can be lowered with a Hoist Load Under load present.

- **HOIST LOAD OVERLOAD (RED) Light:** Provides indication that hoist upward motion should have automatically stopped because the load

on the mast has gone above the maximum loading allowed for the type of assembly selected on the FUEL SELECTION switch.

- **HOIST FULL UP (GREEN) light:** Provides indication the hoist is at the full up position. Requires either correct mast height encoder position or geared hoist up limit switch.

- **POWER OFF pushbutton**: Provides a means of rapidly removing power from all Refueling Machine motors should an emergency condition exist.

- **UPENDER VERTICAL (GREEN) light**: Indicates the upender is vertical.

- **FUEL (WEIGHT BAND) SELECTION switch**: Six position switch that allows selection of the weight band to apply to the Hoist Overload and Under load. The selector positions apply to the types of base fuel assemblies (LOPAR or Vantage 5) with various combinations of inserts installed. Position six automatically selects the weight range based on information provided by shuffle works.

RE-0019 and ARE-013

- **BOUNDARY BYPASS PUSHBUTTON:** While depressing allows bridge and trolley movement outside of the normal movement range.

- **HOIST LOAD UNDERLOAD (RED) light**: Provides indication that hoist downward motion should have stopped because load has gone under the minimum loading allowed for that type of assembly.

- **HOIST FULL DOWN (RED) light**: Indicates the hoist is full down at the upender, test stand or core. Requires slack cable or correct mast encoder position or the geared down limit switch to achieve.

- **AUTO TRANSFER START/STOP switch**: Not active at this time. May be added in future to initiate upender and transfer carriage operations.

Horizontal Section (Left Side - Sloped)

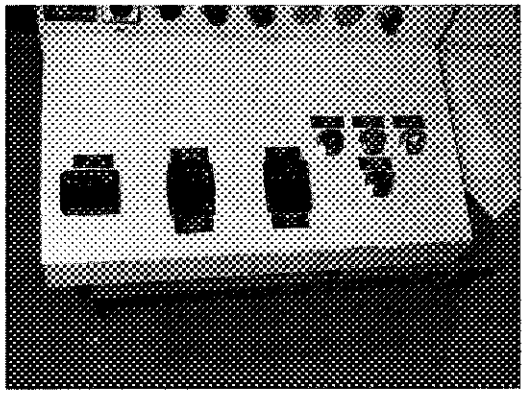

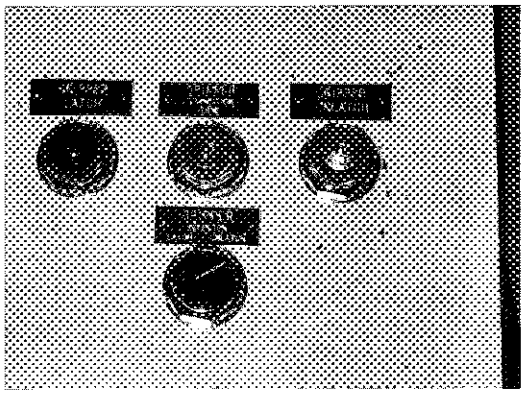

- **BRIDGE LEFT/RIGHT:** Joystick provides method to manually move the bridge left or right. Must be in manual mode to allow operation. If deflected in auto bridge and trolley will stop.

1. 036AK1.02 001

Unit 1 refueling was in progress when a new fuel assembly was dropped in the reactor core and came to rest in close proximity to a previously irradiated fuel assembly. The control room staff noted a small increase in count rate and plotted the next point on the inverse count rate ratio (1/M) plot.

Which ONE of the following correctly describes the reactivity implications of the above conditions?

A. The 1/M plot will trend in the downward direction. There is little risk of creating a critical configuration because the pre-event boron concentration must be such that K-eff is maintained less than 0.95.

B. The 1/M plot will trend in the downward direction. Emergency boration would be required to prevent a loss of shutdown margin (SDM).

C. The 1/M plot will trend in the upward direction. There is little risk of creating a critical configuration because the pre-event boron concentration must be such that K-eff is maintained less than 0.95.

D. The 1/M plot will trend in the upward direction. Emergency boration would be required to prevent a loss of shutdown margin (SDM).

K/A
036 Fuel Handling Accident
AK1.02 Knowledge of the operational implications of the following concepts as they apply to the Fuel Handling Incidents: SDM.

K/A MATCH ANALYSIS
A fuel handling accident has occurred and an operational implication to that is an increase in count rate and a downward trend on the 1/M (ICRR) plot. Testing the knowledge of how the count rate affects the plot is testing an operational implication, related to SDM, of a fuel handing incident. Understanding the pre-event SDM conditions is pertinent to knowing how configuration changes can affect reactivity also.

ANSWER / DISTRACTOR ANALYSIS
A. Correct. Tech Spec 3.9.1; COLR 2.9; 12007-C, Step 2.2.3. The fuel increased count rate will cause the plot to trend downward because the configuration is closer to a critical configuration as compared to pre-event conditions when the baseline count rate would have been recorded.
B. Incorrect. Refueling procedures and the fuel handling event AOP were all checked to ensure emergency boration was not required for a fuel handling event (utility's quote). Plausible because of the increase in CR.
C. Incorrect. The plot will trend in the downward direction. Plausible because the count rate has gone up, which may lead an applicant to believe that the plot should also trend up.
D. Incorrcet. The plot will trend in the downward direction. Plausible because the count rate has gone up, which may lead an applicant to believe that the plot should also trend up.

REFERENCES
1. Technical Specification, LCO 3.9.1.
2. Core Operating Limits Report, Section 2.9.
3. 12007-C, Refueling Operations (Entry Into Mode 6), Rev. 57, 4/21/2004.

MCS	Time:	1	Points:	1.00	Version:	0 1 2 3 4 5 6 7 8 9	
					Answer:	A B D C A C A C C B	Scramble Range: A - D
Tier:		1			Group:	2	
Key Word:		SDM SHUTDOWN MARGIN			Cog Level:	MEM 3.4	
Source:		N			Exam:	VG05301	
Test:		R			Author/Reviewer:	MAB/RSB	

30. 036AK1.02 001

Unit 1 refueling was in progress when a new fuel assembly was dropped in the reactor core and came to rest in close proximity to a previously irradiated fuel assembly. The control room staff noted a small increase in count rate and plotted the next point on the inverse count rate ratio (1/M) plot.

Which ONE of the following correctly describes the reactivity implications of the above conditions?

A. ✓ The 1/M plot will trend in the downward direction, but there is little risk of creating a critical configuration because the pre-event boron concentration must be such that K-eff is maintained less than 0.95 with all control rods inserted, except the most reactive rod.

B. The 1/M plot will trend in the downward direction, but there is little risk of creating a critical configuration because the pre-event boron concentration must be such that K-eff is maintained less than 0.95 with all control rods removed.

C. The 1/M plot will trend in the upward direction, but there is little risk of creating a critical configuration because the pre-event boron concentration must be such that K-eff is maintained less than 0.95 with all control rods inserted, except the most reactive rod.

D. The 1/M plot will trend in the upward direction, but there is little risk of creating a critical configuration because the pre-event boron concentration must be such that K-eff is maintained less than 0.95 with all control rods removed.

K/A
036 Fuel Handling Accident
AK1.02 Knowledge of the operational implications of the following concepts as they apply to the Fuel Handling Incidents: SDM.

K/A MATCH ANALYSIS
A fuel handling accident has occurred and an operational implication to that is an increase in count rate and a downward trend on the 1/M (ICRR) plot. Testing the knowledge of how the count rate affects the plot is testing an operational implication, related to SDM, of a fuel handing incident. Understanding the pre-event SDM conditions is pertinent to knowing how configuration changes can affect reactivity also.

ANSWER / DISTRACTOR ANALYSIS
A. Correct. Tech Spec 3.9.1; COLR 2.9; 12007-C, Step 2.2.3. The fuel increased count rate will cause the plot to trend downward because the configuration is closer to a critical configuration as compared to pre-event conditions when the baseline count rate would have been recorded.
B. Incorrect. The requirement does not require that all rods are removed. Plausible because the ICRR plot will trend downward.
C. Incorrect. The plot will trend in the downward direction. Plausible because the count rate has gone up, which may lead an applicant to believe that the plot should also trend up.
D. Incorrcet. The plot will trend in the downward direction. The requirement does not require that all rods are removed. Plausible because the count rate has gone up, which may lead an applicant to believe that the plot should also trend up.

REFERENCES
1. Technical Specification, LCO 3.9.1.
2. Core Operating Limits Report, Section 2.9.
3. 12007-C, Refueling Operations (Entry Into Mode 6), Rev. 57, 4/21/2004.

MCS	Time:	1	Points:	1.00	Version:	0 1 2 3 4 5 6 7 8 9	
					Answer:	A B D C A C A C C B	Scramble Range: A - D
Tier:		1			Group:	2	
Key Word:		SDM SHUTDOWN MARGIN			Cog Level:	MEM 3.4	
Source:		N			Exam:	VG05301	
Test:		R			Author/Reviewer:	MAB/RSB	

30. 036AK1.02 001

Unit 1 refueling was in progress when a new fuel assembly was dropped in the reactor core and came to rest in close proximity to a previously irradiated fuel assembly. The control room staff noted a small increase in count rate and plotted the next point on the inverse count rate ratio (1/M) plot.

Which ONE of the following correctly describes the reactivity implications of the above conditions?

A.✓ The 1/M plot will trend in the downward direction, but there is little risk of creating a critical configuration because the pre-event boron concentration must be such that K-eff is maintained less than 0.95 with all control rods inserted, except the most reactive rod.

B. The 1/M plot will trend in the downward direction, but there is little risk of creating a critical configuration because the pre-event boron concentration must be such that K-eff is maintained less than 0.95 with all control rods removed.

C. The 1/M plot will trend in the upward direction, but there is little risk of creating a critical configuration because the pre-event boron concentration must be such that K-eff is maintained less than 0.95 with all control rods inserted, except the most reactive rod.

D. The 1/M plot will trend in the upward direction, but there is little risk of creating a critical configuration because the pre-event boron concentration must be such that K-eff is maintained less than 0.95 with all control rods removed.

K/A
036 Fuel Handling Accident
AK1.02 Knowledge of the operational implications of the following concepts as they apply to the Fuel Handling Incidents: SDM.

K/A MATCH ANALYSIS
A fuel handling accident has occurred and an operational implication to that is an increase in count rate and a downward trend on the 1/M (ICRR) plot. Testing the knowledge of how the count rate affects the plot is testing an operational implication, related to SDM, of a fuel handing incident. Understanding the pre-event SDM conditions is pertinent to knowing how configuration changes can affect reactivity also.

ANSWER / DISTRACTOR ANALYSIS
A. Correct. Tech Spec 3.9.1; COLR 2.9; 12007-C, Step 2.2.3. The fuel increased count rate will cause the plot to trend downward because the configuration is closer to a critical configuration as compared to pre-event conditions when the baseline count rate would have been recorded.
B. Incorrect. The requirement does not require that all rods are removed. Plausible because the ICRR plot will trend downward.
C. Incorrect. The plot will trend in the downward direction. Plausible because the count rate has gone up, which may lead an applicant to believe that the plot should also trend up.
D. Incorrcet. The plot will trend in the downward direction. The requirement does not require that all rods are removed. Plausible because the count rate has gone up, which may lead an applicant to believe that the plot should also trend up.

REFERENCES
1. Technical Specification, LCO 3.9.1.
2. Core Operating Limits Report, Section 2.9.
3. 12007-C, Refueling Operations (Entry Into Mode 6), Rev. 57, 4/21/2004.

MCS	Time:	1	Points:	1.00	Version:	0 1 2 3 4 5 6 7 8 9	
					Answer:	A B D C A C A C C B	Scramble Range: A - D

Tier:	1	Group:	2
Key Word:	SDM SHUTDOWN MARGIN	Cog Level:	MEM 3.4
Source:	N	Exam:	VG05301
Test:	R	Author/Reviewer:	MAB/RSB

4. 036AK1.02 001

Unit 1 refueling was in progress when a new fuel assembly was dropped in the reactor core and came to rest in close proximity to a previously irradiated fuel assembly. The control room staff noted a small increase in count rate and plotted the next point on the intermediate count rate ratio (ICRR) plot.
Inverse 1/M

Which ONE of the following correctly describes the reactivity implications of the above conditions?

A. The ICRR (1/M) plot will trend in the downward direction, but there is little risk of creating a critical configuration because the pre-event boron concentration must be such that K-eff is maintained less than 0.95 with all control rods inserted, except the most reactive rod.

B. The ICRR (1/M) plot will trend in the downward direction, but there is little risk of creating a critical configuration because the pre-event boron concentration must be such that K-eff is maintained less than 0.95 with all control rods removed.

C. The ICRR (1/M) plot will trend in the upward direction, but there is little risk of creating a critical configuration because the pre-event boron concentration must be such that K-eff is maintained less than 0.95 with all control rods inserted, except the most reactive rod.

D. The ICRR (1/M) plot will trend in the upward direction, but there is little risk of creating a critical configuration because the pre-event boron concentration must be such that K-eff is maintained less than 0.95 with all control rods removed.

K/A
036 Fuel Handling Accident
AK1.02 Knowledge of the operational implications of the following concepts as they apply to the Fuel Handling Incidents: SDM.

K/A MATCH ANALYSIS
A fuel handling accident has occurred and an operational implication to that is an increase in count rate and a downward trend on the 1/M (ICRR) plot. Testing the knowledge of how the count rate affects the plot is testing an operational implication, related to SDM, of a fuel handing incident. Understanding the pre-event SDM conditions is pertinent to knowing how configuration changes can affect reactivity also.

ANSWER / DISTRACTOR ANALYSIS
A. Correct. Tech Spec 3.9.1; COLR 2.9; 12007-C, Step 2.2.3. The fuel increased count rate will cause the plot to trend downward because the configuration is closer to a critical configuration as compared to pre-event conditions when the baseline count rate would have been recorded.
B. Incorrect. The requirement does not require that all rods are removed. Plausible because the ICRR plot will trend downward.
C. Incorrect. The plot will trend in the downward direction. Plausible because the count rate has gone up, which may lead an applicant to believe that the plot should also trend up.
D. Incorrcet. The plot will trend in the downward direction. The requirement does not require that all rods are removed. Plausible because the count rate has gone up, which may lead an applicant to believe that the plot should also trend up.

REFERENCES
1. Technical Specification, LCO 3.9.1.
2. Core Operating Limits Report, Section 2.9.
3. 12007-C, Refueling Operations (Entry Into Mode 6), Rev. 57, 4/21/2004.

MCS	Time:	1	Points:	1.00	Version:	0 1 2 3 4 5 6 7 8 9	
					Answer:	A B D C A C A C C B	Scramble Range: A - D
Tier:		1			Group:	2	
Key Word:		SDM SHUTDOWN MARGIN			Cog Level:	MEM 3.4	
Source:		N			Exam:	VG05301	
Test:		R			Author/Reviewer:	MAB/RSB	

3.9 REFUELING OPERATIONS

3.9.1 Boron Concentration

LCO 3.9.1 Boron concentrations of the Reactor Coolant System, the refueling canal, and the refueling cavity shall be maintained within the limit specified in the COLR.

APPLICABILITY: MODE 6.

ACTIONS

---NOTE---
With the RCS boron concentration specified in the COLR for MODE 6 not met, entry into MODE 6 is not permitted.

CONDITION	REQUIRED ACTION		COMPLETION TIME
A. Boron concentration not within limit.	A.1	Suspend CORE ALTERATIONS.	Immediately
	AND		
	A.2	Suspend positive reactivity additions.	Immediately
	AND		
	A.3	Initiate action to restore boron concentration to within limit.	Immediately

SURVEILLANCE REQUIREMENTS

SURVEILLANCE		FREQUENCY
SR 3.9.1.1	Verify boron concentration is within the limit specified in the COLR.	72 hours

2.7 Nuclear Enthalpy Rise Hot Channel Factor - $F^N_{\Delta H}$ (Specification 3.2.2)

2.7.1 $F^N_{\Delta H} \leq F^{RTP}_{\Delta H} * (1 + PF_{\Delta H} * (1-P))$

where: $P = \dfrac{\text{THERMAL POWER}}{\text{RATED THERMAL POWER}}$

2.7.2 $F^{RTP}_{\Delta H} = 1.65$

2.7.3 $PF_{\Delta H} = 0.3$

2.8 Axial Flux Difference (Specification 3.2.3)

2.8.1 The Axial Flux Difference (AFD) acceptable operation limits are provided in Figure 5.

2.9 Boron Concentration (Specification 3.9.1)

2.9.1 The boron concentration shall be greater than or equal to 1905 ppm.[1]

[1]This concentration bounds the condition of $k_{eff} \leq 0.95$ (all rods in less the most reactive rod) and subcriticality (all rods out) over the entire cycle. This concentration includes additional boron to address uncertainties and B^{10} depletion.

1.8 If the Fuel transfer Canal Gate valve is to be opened with the fuel transfer canal dry, HP should be notified to cover the canal to limit possible airborne contamination of the FHB pool area.

2.1.9 During planned positive reactivity changes the HFASA will need to be adjusted (raised) per 13501-1/2 "Nuclear Instrumentation System" to prevent inadvertent alarms.

2.2 LIMITATIONS

2.2.1 RCS pressure (PI-0403 and/or PI-0405) and temperature shall not exceed 365 psig and 350 degrees when open to the Residual Heat Removal (RHR) System.

2.2.2 In Mode 5, shutdown margin shall be greater than or equal to the limit specified in the COLR. (TS LCO 3.1.1)

2.2.3 In Mode 6, boron concentrations of the RCS, the refueling canal, and the refueling cavity shall be maintained within the limit specified in the COLR. (TS LCO 3.9.1) (CO 5021, CO 31760)

2.2.4 In Mode 6, each valve used to isolate unborated water sources as listed in 14228, "Operations Monthly Surveillance Logs" shall be secured in the closed position. Valves 1208-U4-176 and 177 may be opened under administrative control provided the RCS is in compliance with LCO 3.9.1 and the HFASA is OPERABLE. (TS LCO 3.9.2) (CO 1338, CO 32834, CO 32975)

2.2.5 In Mode 5, with the RCS loops not filled, two RHR loops shall be operable and one RHR loop shall be in operation. Each valve used to isolate unborated water sources as listed in 14228, "Operations Monthly Surveillance Logs" shall be secured in the closed position. Valves 1208-U4-176 and 177 may be opened under administrative control provided the RCS is in compliance with the SHUTDOWN MARGIN requirements of LCO 3.1.1 and the HFASA is OPERABLE per LCO 3.3.8. (TS LCO 3.4.8) (CO 29816, CO 32834, CO 32975)

31. 037AK1.02 001

Unit 2 is shutting down from 100% Rated Thermal Power in response to a steam generator tube leak per AOP 18009-C, Steam Generator Tube Leak.

Which ONE of the following correctly states the trend of the estimated leak rate during the shutdown and the reason for the trend? (Assume that the geometric size of the flaw remains constant)

A.✓ Estimated leak rate would decrease because the primary to secondary pressure difference is reduced as power is lowered.

B. Estimated leak rate would decrease because the air ejector flow rate would decrease as power is lowered.

C. Estimated leak rate would remain the same because the monitored isotopes analyzed are independent of power level.

D. Estimated leak rate would increase because of the iodine spiking associated with the shutdown.

K/A
037 Steam Generator Tube Leak
AK1.02 Knowledge of the operational implications of the following concepts as they apply to Steam Generator Tube Leak: Leak rate vs. pressure drop.

K/A MATCH ANALYSIS
The question tests knowledge of operational implications of how the leak rate changes as the dP across the SG tubes decreases with a power reduction.

ANSWER / DISTRACTOR ANALYSIS
A. Correct. As Gov Valves (or Control Valves) are closed, the pressure in the SGs will rise, thus reducing the dP across the tubes, thereby reducing the leak rate.
B. Incorrect. If offgas flow rate goes down, then the leakage baed on that would go up.
C. Incorrect. Leakage decreases. Plausible there is not a noticeable change in isotopes and this distractor could be considered realistic if an applicant did not consider the dP changes.
D. Incorrect. Plausible because iodine spiking does occur on a rapid shutdown such as a reactor trip.

REFERENCES
1. Point Beach 2002 RO Exam 037AK1.02.

MCS Time: 1 Points: 1.00 Version: 0 1 2 3 4 5 6 7 8 9
Answer: A A B B C D C A A C Scramble Range: A - D

QUESTIONS REPORT
for Voglte 2005-301 Draft

Tier:	1	Group:	2
Key Word:	SGTL LEAK RATE	Cog Level:	C/A 3.5
Source:	B	Exam:	VG05301
Test:	R	Author/Reviewer:	MAB/RSB

31. 037AK1.02 001

Unit 2 is shutting down from 100% Rated Thermal Power in response to a steam generator tube leak. per AOP 18009-C, SGTL.

Which ONE of the following correctly states the trend of the estimated leak rate during the shutdown and the reason for the trend? (Assume that the geometric size of the flaw remains constant)

A. Estimated leak rate would decrease because the primary to secondary pressure difference is reduced as power is lowered.

B. Estimated leak rate would decrease because the air ejector flow rate would decrease as power is lowered.

C. Estimated leak rate would remain the same because the monitored isotopes analyzed are independent of power level.

D. Estimated leak rate would increase because of the iodine spiking associated with the shutdown.

K/A
037 Steam Generator Tube Leak
AK1.02 Knowledge of the operational implications of the following concepts as they apply to Steam Generator Tube Leak: Leak rate vs. pressure drop.

K/A MATCH ANALYSIS
The question tests knowledge of operational implications of how the leak rate changes as the dP across the SG tubes decreases with a power reduction.

ANSWER / DISTRACTOR ANALYSIS
A. Correct. As Gov Valves (or Control Valves) are closed, the pressure in the SGs will rise, thus reducing the dP across the tubes, thereby reducing the leak rate.
B. Incorrect. If offgas flow rate goes down, then the leakage baed on that would go up.
C. Incorrect. Leakage decreases. Plausible there is not a noticeable change in isotopes and this distractor could be considered realistic if an applicant did not consider the dP changes.
D. Incorrect. Plausible because iodine spiking does occur on a rapid shutdown such as a reactor trip.

REFERENCES
1. Point Beach 2002 RO Exam 037AK1.02.

MCS Time: 1 Points: 1.00 Version: 0 1 2 3 4 5 6 7 8 9
Answer: A A B B C D C A A C Scramble Range: A - D

QUESTIONS REPORT
for VogIte 2005-301 Draft

Tier:	1	Group:	2
Key Word:	SGTL LEAK RATE	Cog Level:	C/A 3.5
Source:	B	Exam:	VG05301
Test:	R	Author/Reviewer:	MAB/RSB

QUESTIONS REPORT
for Vogtle 2005-301 Draft

1. 037AK1.02 001

Unit 2 is shutting down from 100% Rated Thermal Power in response to a steam generator tube leak.

Which ONE of the following correctly states the trend of ~~a chemistry~~ the leak rate ~~calculation~~ during the shutdown and the reason for the trend? (Assume that the geometric size of the flaw remains constant)

A. ~~Calculated leakage~~ Leak rate would decrease because the primary to secondary pressure difference is reduced. as power is lowered.

B. ~~Calculated leakage~~ L. R. would increase because the air ejector flow rate would decrease. as power is lowered.

C. ~~Calculated leakage~~ L. R. would remain the same because the isotopes ~~analyzed~~ monitored are ~~mea~~ independent of power level.

D. ~~Calculated leakage~~ L. R. would increase because of the iodine spiking associated with the shutdown.

K/A
037 Steam Generator Tube Leak
AK1.02 Knowledge of the operational implications of the following concepts as they apply to Steam Generator Tube Leak: Leak rate vs. pressure drop.

K/A MATCH ANALYSIS
The question tests knowledge of operational implications of how the leak rate changes as the dP across the SG tubes decreases with a power reduction.

ANSWER / DISTRACTOR ANALYSIS
A. Correct. As Gov Valves (or Control Valves) are closed, the pressure in the SGs will rise, thus reducing the dP across the tubes, thereby reducing the leak rate.
B. Incorrect. Leakage decreases. Plausible because offgas readings would go up with a lower flowrate.
C. Incorrect. Leakage decreases. Plausible there is not a noticeable change in isotopes and this distractor could be considered realistic if an applicant did not consider the dP changes.
D. Incorrect. Plausible because iodine spiking does occur on a rapid shutdown such as a reactor trip.

REFERENCES
1. Point Beach 2002 RO Exam 037AK1.02.

MCS Time: 1 Points: 1.00 Version: 0 1 2 3 4 5 6 7 8 9
Answer: A A B B C D C A A C Scramble Range: A - D

QUESTIONS REPORT
for Vogtle 2005-301 Draft

Tier:	1	Group:	2
Key Word:	SGTL LEAK RATE	Cog Level:	C/A 3.5
Source:	B	Exam:	VG05301
Test:	R	Author/Reviewer:	MAB/RSB

..037.AK1.02 | 02/02/2002

Point Beach 1 | Exam Level R

Mark Question | Print Recor | New Searc | Exit

Question

Unit 1 is shutting down from 100% power in response to a steam generator tube leak. What would be the expected trend of chemistry leak rate calculations during the shutdown and why? (Assume the flaw size remains constant.)

Answer:

Leakage would decrease because primary to secondary pressure difference is reduced.

Distracter 1

Leakage would increase because air ejector flow rate would decrease.

Distracter 2

Leakage would remain the same because isotopes analyzed are independent of power.

Distracter 3

Leakage cannot be determined accurately when power is being changed due to iodine spiking.

Distracter Analysis:

Answer:

Distracter 1:

Distracter 2:

Distracter 3:

32. 038EA2.17 001

The following Unit 1 conditions exist:

- A steam generator tube rupture has occurred and the control room crew has proceeded to the point in 19030-C, E-3 Steam Generator Tube Rupture, where they are evaluating conditions for restart of a reactor coolant pump.
- Containment pressure is 1 psig.
- Containment temperature is 100 °F.

Which ONE of the following correctly describes a set of conditions that would NOT prevent restart of a reactor coolant pump?

A. RCP seal number 1 temperatures are 195 °F. Seal injection flow and ACCW cooling to the thermal barrier was lost for 15 minutes.

B. ✓ RCP seal number 1 dP is 210 psi and pressurizer level is 95%.

C. RCP seal number 1 temperatures are 225 °F. Seal injection flow and ACCW cooling to the thermal barrier was lost for 15 minutes.

D. RCP seal number 1 dP is 220 psi and #1 seal leakoff flow is 5.8 gpm.

K/A
038 Steam Gen. Tube Rupture
EA2.17 Ability to determine or interpret the following as they apply to a SGTR: RCP restart criteria.

K/A MATCH ANALYSIS
The question tests knowledge of RCP restart criteria during a SGTR. The knowledge being tested is required for an applicant to have the ability to determine RCP restart criteria. Question is specifically worded as "NOT to prevent" because this clarifies the point that there are other parameters to look at prior to knowing enough to restart the pump. If the question was written as "conditions that would allow," then one could argue that there was not enough information to answer the question.

ANSWER / DISTRACTOR ANALYSIS
A. Incorrect. RCPs should not be restarted if a loss of seal injection and a loss of thermal barrier cooling occurred until an eval of the RCPs is completed. Plausible since seal temperature < 220 °F.
B. Correct. dP is > 200 psi (See App. B of 19030-C) and level is not an issue.
C. Incorrect. Seal Temp < 220 F. Plausible because temp is close to being OK. Also, an eval needs to be performed prior to restart.
D. Incorrect. Seal leakoff is slightly > limit of 5.5 gpm. Plausible because dP is OK.

REFERENCES
1. 19030-C, E-3 Steam Generator Tube Rupture, Rev. 30, 04/02/2004.
2. 13003-1, Reactor Coolant Pump Operation, Rev. 31, 02/17/2004.

MCS	Time:	1	Points:	1.00	Version:	0 1 2 3 4 5 6 7 8 9	
					Answer:	B C A C D A D A D C	Scramble Range: A - D
Tier:		1			Group:	1	
Key Word:		SGTR RCP RESTART			Cog Level:	MEM 3.8	
Source:		N			Exam:	VG05301	
Test:		R			Author/Reviewer:	MAB/RSB	

1. 038EA2.17 001

The following Unit 1 conditions exist:

- A steam generator tube rupture has occurred and the control room crew has proceeded to the point in 19030-C, E-3 Steam Generator Tube Rupture, where they are evaluating conditions for restart of a reactor coolant pump.
- Containment pressure is 1 psig.
- Containment temperature is 100 °F.

Which ONE of the following correctly describes a set of conditions that would NOT prevent restart of a reactor coolant pump?

A. RCP seal number 1 temperatures are 195 °F. Seal injection flow and ACCW cooling to the thermal barrier was lost for 15 minutes.

B. RCP seal number 1 dP is 210 psi and pressurizer level is 95%.

C. RCP seal number 1 temperatures are 225 °F. Seal injection flow and ACCW cooling to the thermal barrier was lost for 15 minutes.

D. RCP seal number 1 dP is 220 psi and #1 seal leakoff flow is 5.8 gpm.

K/A
038 Steam Gen. Tube Rupture
EA2.17 Ability to determine or interpret the following as they apply to a SGTR: RCP restart criteria.

K/A MATCH ANALYSIS
The question tests knowledge of RCP restart criteria during a SGTR. The knowledge being tested is required for an applicant to have the ability to determine RCP restart criteria. Question is specifically worded as "NOT to prevent" because this clarifies the point that there are other parameters to look at prior to knowing enough to restart the pump. If the question was written as "conditions that would allow," then one could argue that there was not enough information to answer the question.

ANSWER / DISTRACTOR ANALYSIS
A. Incorrect. RCPs should not be restarted if a loss of seal injection and a loss of thermal barrier cooling occurred until an eval of the RCPs is completed. Plausible since seal temperature < 220 °F.
B. Correct. dP is > 200 psi (See App. B of 19030-C) and level is not an issue.
C. Incorrect. Seal Temp < 220 F. Plausible because temp is close to being OK. Also, an eval needs to be performed prior to restart.
D. Incorrect. Seal leakoff is slightly > limit of 5.5 gpm. Plausible because dP is OK.

REFERENCES
1. 19030-C, E-3 Steam Generator Tube Rupture, Rev. 30, 04/02/2004.
2. 13003-1, Reactor Coolant Pump Operation, Rev. 31, 02/17/2004.

MCS	Time:	1	Points:	1.00	Version:	0 1 2 3 4 5 6 7 8 9	
					Answer:	B C A C D A D A D C	Scramble Range: A - D
Tier:		1			Group:	1	
Key Word:		SGTR RCP RESTART			Cog Level:	MEM 3.8	
Source:		N			Exam:	VG05301	
Test:		R			Author/Reviewer:	MAB/RSB	

ATTACHMENT B

STARTING A REACTOR COOLANT PUMP

CAUTION:

- This attachment is not to be used if the RCP seal number one temperature is greater than or equal to 220°F.
- If RCP seal injection and ACCW cooling to an RCP thermal barrier has previously been lost, the affected RCP(s) should not be started prior to a status evaluation.

1. Establish Initial Conditions:

   a. 13.8kV power available to RCP.

   b. Seal #1 dP greater than or equal to 200 psid.

   c. Seal injection flow 8 to 13 gpm.

   d. Seal leakoff flow within figure 2 of 13003.

2. Check the following alarms clear or establish conditions to clear those alarms for the RCP to be started:

   a. RCP LOWER OIL RSVR HI/LO LEVEL.

   b. RCP UPPER OIL RSVR HI/LO LEVEL.

   c. VOLUME CONTROL TANK OUTLET TEMP HI.

   d. VCT HI/LO PRESS.

   e. RCP STNDPIPE LO LEVEL.

   f. RCP STNDPIPE HI LEVEL.

   g. RCP MTR OVERLOAD.

   h. RCP NO 2 SEAL LKOFF HI FLOW.

   i. ACCW RCP CLR OUTLET HI TEMP.

   j. ACCW RCP CLR LO FLOW.

   k. ACCW RCP THRM BARRIER HX HI FLOW.

   l. ACCW RCP THRM BARRIER HI PRESS.

FIGURE 2

NO. 1 SEAL NORMAL OPERATING RANGE

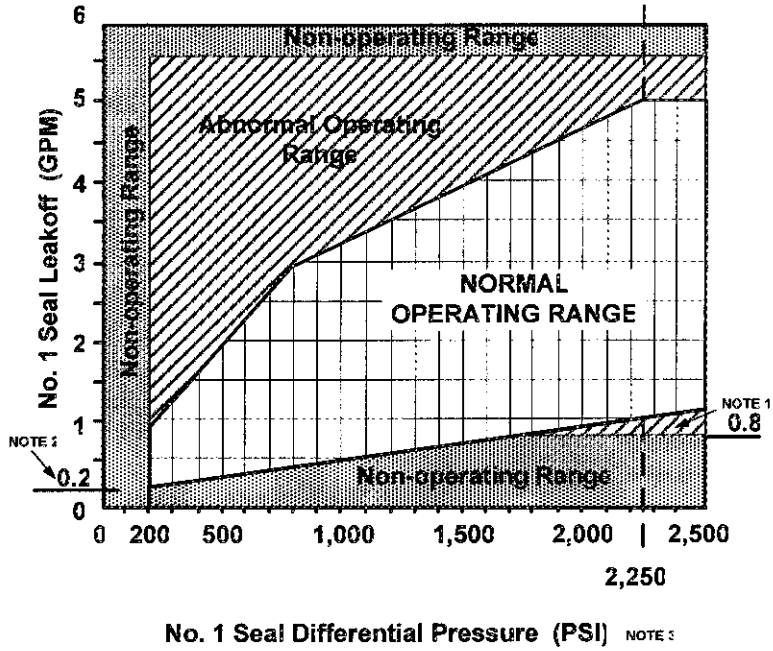

1. If the No. 1 seal leak rates are outside the normal (1.0-5.0 gpm) but within the operating limits ((0.8-5.5 gpm), continue pump operation. ENSURE that seal injection flow exceeds No. 1 seal leak rate for the affected RCP. Closely monitor pump and seal parameters and contact Engineering for further instructions.

2. Minimum startup requirements are 0.2 gpm at 200 PSID differential across the No. 1 seal. For startups at differential pressures greater than 200 PSID, the minimum No. 1 seal leak rate requirements are defined in the NO. 1 SEAL NORMAL OPERATING RANGE (e.g., at 1000 psi differential pressure, do not start the RCP with less than 0.5 gpm).

3. No.1 Seal Differential Press = RCS WR Press - VCT Press.

Deleted: ¶

Formatted: Centered

Formatted: a., Right: 0.28"

32. 038EA2.17 001

The following Unit 1 conditions exist:

- A steam generator tube rupture has occurred and the control room crew has proceeded to the point in 19030-C, E-3 Steam Generator Tube Rupture, where they are evaluating conditions for restart of a reactor coolant pump.
- RVLIS full range indication is not available.
- Containment pressure is 1 psig.
- Containment temperature is 100 °F.

Which ONE of the following correctly describes a set of conditions that would NOT prevent restart of a reactor coolant pump?

A. RCP seal number 1 temperatures are 225 °F and RCS subcooling is 74 °F.

B. ✓ RCP seal number 1 dP is 210 psi and pressurizer level is 95%.

C. RCP seal number 1 temperatures are 225 °F and RCS subcooling is 50 °F.

D. RCP seal number 1 dP is 220 psi and pressurizer level is 85%.

K/A
038 Steam Gen. Tube Rupture
EA2.17 Ability to determine or interpret the following as they apply to a SGTR: RCP restart criteria.

K/A MATCH ANALYSIS
The question tests knowledge of RCP restart criteria during a SGTR. The knowledge being tested is required for an applicant to have the ability to determine RCP restart criteria. Question specifically worded "NOT to prevent" because this clarifies the point that there are other parameters to look at. If the question was written as "conditions that would allow," then one could argue that there was not enough information to answer the question.

ANSWER / DISTRACTOR ANALYSIS
A. Incorrect. Temp is > 220 F. Plausible because subcooling is OK.
B. Correct. dP is > 200 psi (See App. B of 19030-C) and level is > 90% (See Step 36 of 19030-C).
C. Incorrect. Subcooling is < 60 F. Plausible because temp is close to being OK.
D. Incorrect. Level is < 90%. Plausible because dP is OK.

REFERENCES
1. 19030-C, E-3 Steam Generator Tube Rupture, Rev. 30, 04/02/2004.

QUESTIONS REPORT

for Vogite 2005-301 Draft

MCS Time: 1 Points: 1.00 Version: 0 1 2 3 4 5 6 7 8 9

Answer: B C A C D A D A D C Scramble Range: A - D

Tier:	1	Group:	1
Key Word:	SGTR RCP RESTART	Cog Level:	MEM 3.8
Source:	N	Exam:	VG05301
Test:	R	Author/Reviewer:	MAB/RSB

QUESTIONS REPORT
for Voglte 2005-301 Draft

1. 038EA2.17 001

The following Unit 1 conditions exist:

- A steam generator tube rupture has occurred and the control room crew has proceeded to the point in 19030-C, E-3 Steam Generator Tube Rupture, where they are evaluating conditions for restart of a reactor coolant pump.
- RVLIS full range indication is not available.
- Containment pressure is 1 psig.
- Containment temperature is 100 °F.

Which ONE of the following correctly describes a set of conditions that would NOT prevent restart of a reactor coolant pump?

A. RCP seal number 1 temperatures are 225 °F and RCS subcooling is 74 °F.

B. RCP seal number 1 dP is 210 psi and pressurizer level is 95%.

C. RCP seal number 1 temperatures are 225 °F and RCS subcooling is 50 °F.

D. RCP seal number 1 dP is 220 psi and pressurizer level is 85%.

K/A
038 Steam Gen. Tube Rupture
EA2.17 Ability to determine or interpret the following as they apply to a SGTR: RCP restart criteria.

K/A MATCH ANALYSIS
The question tests knowledge of RCP restart criteria during a SGTR. The knowledge being tested is required for an applicant to have the ability to determine RCP restart criteria. Question specifically worded "NOT to prevent" because this clarifies the point that there are other parameters to look at. If the question was written as "conditions that would allow," then one could argue that there was not enough information to answer the question.

ANSWER / DISTRACTOR ANALYSIS
A. Incorrect. Temp is > 220 F. Plausible because subcooling is OK.
B. Correct. dP is > 200 psi (See App. B of 19030-C) and level is > 90% (See Step 36 of 19030-C).
C. Incorrect. Subcooling is < 60 F. Plausible because temp is close to being OK.
D. Incorrect. Level is < 90%. Plausible because dP is OK.

REFERENCES
1. 19030-C, E-3 Steam Generator Tube Rupture, Rev. 30, 04/02/2004.

QUESTIONS REPORT

for Voglte 2005-301 Draft

MCS Time: 1 Points: 1.00 Version: 0 1 2 3 4 5 6 7 8 9

Answer: B C A C D A D A D C Scramble Range: A - D

Tier:	1	Group:	1
Key Word:	SGTR RCP RESTART	Cog Level:	MEM 3.8
Source:	N	Exam:	VG05301
Test:	R	Author/Reviewer:	MAB/RSB

My copy from working at home.

038EA2.17 SGTR
Ability to determine or interpret the following as they apply to a SGTR: RCP restart criteria.

The following Unit 1 conditions exist:

- A SGTR has occurred and the control room crew has proceeded to the point in 19030-C, Steam Generator Tube Rupture, where they are evaluating conditions for restart of a RCP.
- RVLIS full range indication is not available.
- Containment conditions are not adverse. (i.e. 2 psig)

Adverse Cnmt ≥ 3.8 psig
≥ 1x10^5 R/hr

Which ONE of the following correctly describes a set of conditions that would not prevent restart of a RCP?

A. RCP seal number 1 temperatures are 225 °F; RCS subcooling is 74 °F.
B. RCP seal number 1 dP is 210 psi; Pressurizer Level is 95%.
C. RCP seal number 1 temperatures are 210 °F; RCS subcooling is 50 °F.
D. RCP seal number 1 dP is 220 psi; Pressurizer Level is 85%

K/A Match Analysis
The question tests knowledge of RCP restart criteria during a SGTR.

Distractor Analysis
A. Incorrect. Temp is greater than 220 °F. Plausible because subcooling is OK.
B. Correct. dP is greater than 200 psi (App. B) and level is greater than 90% (Step 36).
C. Incorrect. Subcooling is less than 60 °F. Plausible because temp is OK.
D. Incorrect. Level is less than 90%. Plausible because dP is OK.

References
1. 19030-C, E-3 Steam Generator Tube Rupture, Rev. 30, 04/02/2004.

ACTION/EXPECTED RESPONSE	RESPONSE NOT OBTAINED
33. Energize PRZR heaters as necessary to saturate PRZR water at ruptured SG(s) pressure.	
34. Check RCP cooling - NORMAL:	
a. RCP seal number 1 temperatures less than 220°F	a. Do NOT reestablish RCP thermal barrier cooling or seal injection. Go to Step 37.
b. Annunciator alarm: ACCW RCP CLR LO FLOW - CLEAR.	b. Establish normal RCP ACCW System flow by initiating 13716, AUXILIARY COMPONENT COOLING WATER SYSTEM.
c. RCP seal injection flow - 8 TO 13 GPM PER RCP.	c. Establish RCP seal injection flow by initiating 13006, CHEMICAL AND VOLUME CONTROL SYSTEM.

ACTION/EXPECTED RESPONSE	RESPONSE NOT OBTAINED
*35. Check if RCP seal leakoff flow should be established:	
a. Check RCS pressure - GREATER THAN 100 PSIG.	a. Try to restore conditions for establishing RCP seal leakoff flow by initiating 13003, REACTOR COOLANT PUMP OPERATION. IF conditions can NOT be restored, THEN go to Step 36. OBSERVE NOTE PRIOR TO STEP 36.
b. Establish flow:	
1) Open RCP seal leakoff header isolation valves: • HV-8112 - RCPS SEAL LEAKOFF ORC ISOLATION • HV-8100 - RCPS SEAL LEAKOFF IRC ISOLATION	
2) Ensure seal leakoff flow from each RCP - NORMAL FOR RCP SEAL NUMBER 1 DIFFERENTIAL PRESSURE by initiating 13003, REACTOR COOLANT PUMP OPERATION.	2) Open RCP NUMBER 1 SEAL LEAKOFF ISOLATION valves as necessary: • HV-8141A (RCP 1) • HV-8141B (RCP 2) • HV-8141C (RCP 3) • HV-8141D (RCP 4)

ACTION/EXPECTED RESPONSE	RESPONSE NOT OBTAINED

NOTE:

- RCP 4 (preferentially) or RCP 1 should be run to provide normal PRZR spray.
- Spray valves should be shut if the associated RCP 4 or RCP 1 is not running to prevent spray flow leaking through non-isolated spray path.

*36. Check RCP status:

a. Check RCPs - AT LEAST ONE RUNNING.

a. Try to start one RCP:

1) IF RVLIS full range indication is less than 98%, THEN perform the following:

- Raise PRZR level greater than 90% [90% ADVERSE].
- Raise RCS subcooling based on core exit TCs greater than 60°F [74°F ADVERSE].
- Use PRZR heaters, as necessary to saturate the pressurizer water.

2) Start one RCP using ATTACHMENT B.

3) IF an RCP can not be started, THEN verify natural circulation using ATTACHMENT C.

IF natural circulation NOT verified, THEN raise rate of dumping steam using steam dumps.

WHEN natural circulation is verified, THEN maintain rate of dumping steam.

b. Stop all but one RCP.

ATTACHMENT B

STARTING A REACTOR COOLANT PUMP

CAUTION:

- This attachment is not to be used if the RCP seal number one temperature is greater than or equal to 220°F.
- If RCP seal injection and ACCW cooling to an RCP thermal barrier has previously been lost, the affected RCP(s) should not be started prior to a status evaluation.

1. Establish Initial Conditions:

   a. 13.8kV power available to RCP.

   b. Seal #1 dP greater than or equal to 200 psid.

   c. Seal injection flow 8 to 13 gpm.

   d. Seal leakoff flow within figure 2 of 13003.

2. Check the following alarms clear or establish conditions to clear those alarms for the RCP to be started:

   a. RCP LOWER OIL RSVR HI/LO LEVEL.

   b. RCP UPPER OIL RSVR HI/LO LEVEL.

   c. VOLUME CONTROL TANK OUTLET TEMP HI.

   d. VCT HI/LO PRESS.

   e. RCP STNDPIPE LO LEVEL.

   f. RCP STNDPIPE HI LEVEL.

   g. RCP MTR OVERLOAD.

   h. RCP NO 2 SEAL LKOFF HI FLOW.

   i. ACCW RCP CLR OUTLET HI TEMP.

   j. ACCW RCP CLR LO FLOW.

   k. ACCW RCP THRM BARRIER HX HI FLOW.

   l. ACCW RCP THRM BARRIER HI PRESS.

33. 039A4.07 001

The following Unit 1 conditions exist:

- The reactor is at 90% Rated Thermal Power
- Rod control is in automatic with CBD at 196 steps
- All control systems are in their normal alignment
- Turbine load decreases to 850 MWe in 30 seconds
- PT-506 (turbine impulse pressure) sticks at 90%

Which ONE of the following is the correct response to this transient?

A.✓ The steam dump Tave controller generates a demand signal, but the steam dumps remain shut.

B. The steam dump Tave controller generates a demand signal and Bank 1 opens.

C. The steam dump Tave controller generates a demand signal and Banks 1 and 2 open.

D. The steam dump Tave controller generates a demand signal and Banks 1, 2 and 3 open.

K/A
039 Main and Reheat Steam
A4.07 Ability to manually operate and / or monitor in the control room: Steam dump valves.

K/A MATCH ANALYSIS
The question tests the knowledge that is required to correctly monitor the steam dump system and recognize how it will respond when inputs to the system fail.

ANSWER / DISTRACTOR ANALYSIS
A. Correct. A demand signal is generated due to the difference in Tref and Tavg. No arming signal is present because (C-7 not present) PT-506 must change by 10%/120 sec and it has stuck at its original value of 90%. The Tave mode would be the normal alignment, as noted in the question stem.
B, C, D. Incorrect. No arming signal. Plausible because applicant would need to use data in stem to figure out what the demand would be if they believed there was an arming signal present. Applicants could think that dumps are armed because there is a load rejection.

REFERENCES
1. V-LO-TX21201, Steam Dumps, Rev. 1
2. V-LO-TX-27101, Rod Control, Rev. 1
3. V-LO-TX-28101, RPS-SSPS-AMSAC, Rev. 3
4. Question from Vogtle Exam Bank LO-LP-21000-00-01

MCS	Time:	1	Points:	1.00	Version:	0 1 2 3 4 5 6 7 8 9	
					Answer:	A A B C C D A D B A	Scramble Range: A - D
Tier:		2			Group:	1	
Key Word:		STEAM DUMPS			Cog Level:	C/A 2.8	
Source:		M			Exam:	VG05301	
Test:		R			Author/Reviewer:	MAB/RSB	

33. 039A4.07 001

The following Unit 1 conditions exist:

- The reactor is at 90% Rated Thermal Power
- Rod control is in automatic with CBD at 196 steps
- All control systems are in their normal alignment
- Turbine load decreases to 850 MWe in 30 seconds
- PT-506 (turbine impulse pressure) sticks at 90%

Which ONE of the following is the correct response to this transient?

A. The steam dump Tave controller generates a demand signal, but the steam dumps remain shut.

B. The steam dump Tave controller generates a demand signal and Bank 1 opens.

C. The steam dump Tave controller generates a demand signal and Banks 1 and 2 open.

D. The steam dump Tave controller generates a demand signal and Banks 1, 2 and 3 open.

K/A
039 Main and Reheat Steam
A4.07 Ability to manually operate and / or monitor in the control room: Steam dump valves.

K/A MATCH ANALYSIS
The question tests the knowledge that is required to correctly monitor the steam dump system and recognize how it will respond when inputs to the system fail.

ANSWER / DISTRACTOR ANALYSIS
A. Correct. A demand signal is generated due to the difference in Tref and Tavg. No arming signal is present because (C-7 not present) PT-506 must change by 10%/120 sec and it has stuck at its original value of 90%. The Tave mode would be the normal alignment, as noted in the question stem.
B, C, D. Incorrect. No arming signal. Plausible because applicant would need to use data in stem to figure out what the demand would be if they believed there was an arming signal present. Applicants could think that dumps are armed because there is a load rejection.

REFERENCES
1. V-LO-TX21201, Steam Dumps, Rev. 1
2. V-LO-TX-27101, Rod Control, Rev. 1
3. V-LO-TX-28101, RPS-SSPS-AMSAC, Rev. 3
4. Question from Vogtle Exam Bank LO-LP-21000-00-01

MCS	Time:	1	Points:	1.00	Version:	0 1 2 3 4 5 6 7 8 9	
					Answer:	A A B C C D A D B A	Scramble Range: A - D
Tier:		2			Group:	1	
Key Word:		STEAM DUMPS			Cog Level:	C/A 2.8	
Source:		M			Exam:	VG05301	
Test:		R			Author/Reviewer:	MAB/RSB	

1. 039A4.07 001

The following Unit 1 conditions exist:

- The reactor is at 90% Rated Thermal Power
- Rod control is in automatic with CBD at 196 steps
- All control systems are in their normal alignment
- Turbine load decreases to 850 MWe in 30 seconds
- PT-506 (turbine impulse pressure) sticks at 90%

Which ONE of the following is the correct response to this transient?

A.✓ The steam dump Tave controller generates a demand signal, but the steam dumps remain shut.

B. The steam dump Tave controller generates a demand signal and Bank 1 opens.

C. The steam dump Tave controller generates a demand signal and Banks 1 and 2 open.

D. The steam dump Tave controller generates a demand signal and Banks 1, 2 and 3 open.

K/A
039 Main and Reheat Steam
A4.07 Ability to manually operate and / or monitor in the control room: Steam dump valves.

K/A MATCH ANALYSIS
The question tests the knowledge that is required to correctly monitor the steam dump system and recognize how it will respond when inputs to the system fail.

ANSWER / DISTRACTOR ANALYSIS
A. Correct. A demand signal is generated due to the difference in Tref and Tavg. No arming signal is present because (C-7 not present) PT-506 must change by 10%/120 sec and it has stuck at its original value of 90%. The Tave mode would be the normal alignment, as noted in the question stem.
B, C, D. Incorrect. No arming signal. Plausible because applicant would need to use data in stem to figure out what the demand would be if they believed there was an arming signal present. Applicants could think that dumps are armed because there is a load rejection.

REFERENCES
1. V-LO-TX21201, Steam Dumps, Rev. 1
2. V-LO-TX-27101, Rod Control, Rev. 1
3. V-LO-TX-28101, RPS-SSPS-AMSAC, Rev. 3
4. Question from Vogtle Exam Bank LO-LP-21000-00-01

MCS	Time:	1	Points:	1.00	Version:	0 1 2 3 4 5 6 7 8 9	
					Answer:	A A B C C D A D B A	Scramble Range: A - D
Tier:		2			Group:	1	
Key Word:		STEAM DUMPS			Cog Level:	C/A 2.8	
Source:		M			Exam:	VG05301	
Test:		R			Author/Reviewer:	MAB/RSB	

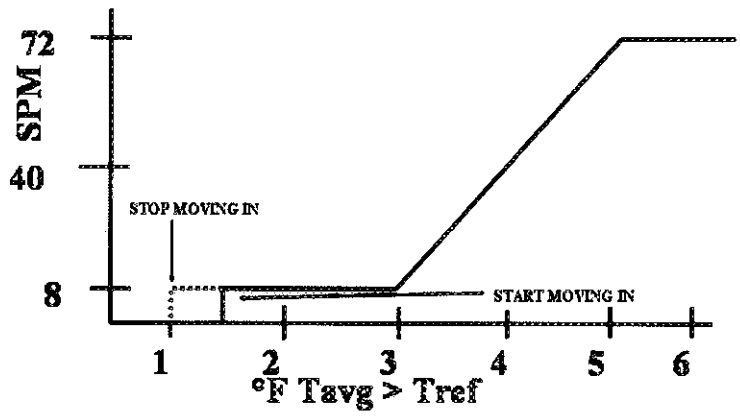

Rod Speed vs. Temp Error

ROD SPEED PROGRAM

As the temperature error signal increases from 0 degrees F. to 1.5 degrees F., the programmer produces no output, and the rods are held in position. This is called the dead band. At 1.5 degrees F. temperature error signal, the programmer will produce a signal to step the rods in at their minimum speed of 8 steps/minute. The programmer will continue to produce this current until the temperature error signal has been reduced to 1.0 deg F. This feature is called lockup and prevents bistable chatter and temperature overshoot. If the temperature error continues to increase, the programmer will produce the 8 step output until a 3 deg F error is reached. At this point, the current output will be linearly ramped upward until a 72 spm output is reached at a 5 deg F temperature error.

3. Rod Control Cabinets

The Rod Control Cabinets are located on level B of the control building. The arrangement of the cabinets is shown in the figure below:

stabilizes for about 27.8 seconds

b) Repeated until below set point

Permissive status light illuminates on BPLP when C-3 is active.

C-4 OPΔT Runback and Rod Stop

Set points:

2 / 4 ΔT channels **3%** below OP delta T trip set point for OPΔT.

Function:

This interlock stops all outward rod motion in auto or manual.

Causes Turbine runback

a) Turbine power reduced at rate of 133%/minute for approx. 2.2 seconds, then held steady for about 27.8 seconds

b) Repeated until below set point

Permissive status light illuminates on BPLP when C-4 is active.

C-5 Lo Turbine Impulse Permissive Rod Stop

Set point:

PT-505 Turbine impulse pressure channel indicates ≤ 15% turbine power.

Function:

Auto rod stop (allows outward motion in manual control)

Permissive status light on BPLP when active

C-7 Loss of Turbine Load Interlock

Set point:

≥ 10% turbine power turbine load reduction in within 120 seconds as indicated by PT-506 Turbine impulse pressure.

Function:

Arms steam dump if C-9 is present

If actuated this interlock must be reset at (QMCB-B)

Permissive status light illuminates on BPLP when C-7 is active

C-9 Condenser available

Set point:

1 / 2 Circ water pump breakers closed with no U/V relays actuated on Circ water pump feeder breaker that is closed and **1 / 2** condenser vacuum sensors in **3 of 3** condensers ≥ **24.92"** Hg vacuum

Function:

Allows steam dump operation

Permissive status light on BPLP when C-9 is active

C-11 Bank D full rod withdrawal

Set point:

220 steps on control Bank D

Function:

Rods will not Auto withdrawal. This prevents rods from continuing to step out past the full rods out position.

Annunciator/alarm when C-11 is active

C-16 Stop turbine loading

Set point:

Auctioneered low Tavg below Tref ≥ 20°F, or

Auctioneered low Tavg ≤ 553°F

This interlock can be manually bypassed from turbine control panel for testing only.

Function:

This interlock prevents turbine loading from cooling the RCS excessively.

Annunciator/alarm on main control board when C-16 is active, if it has not been bypassed.

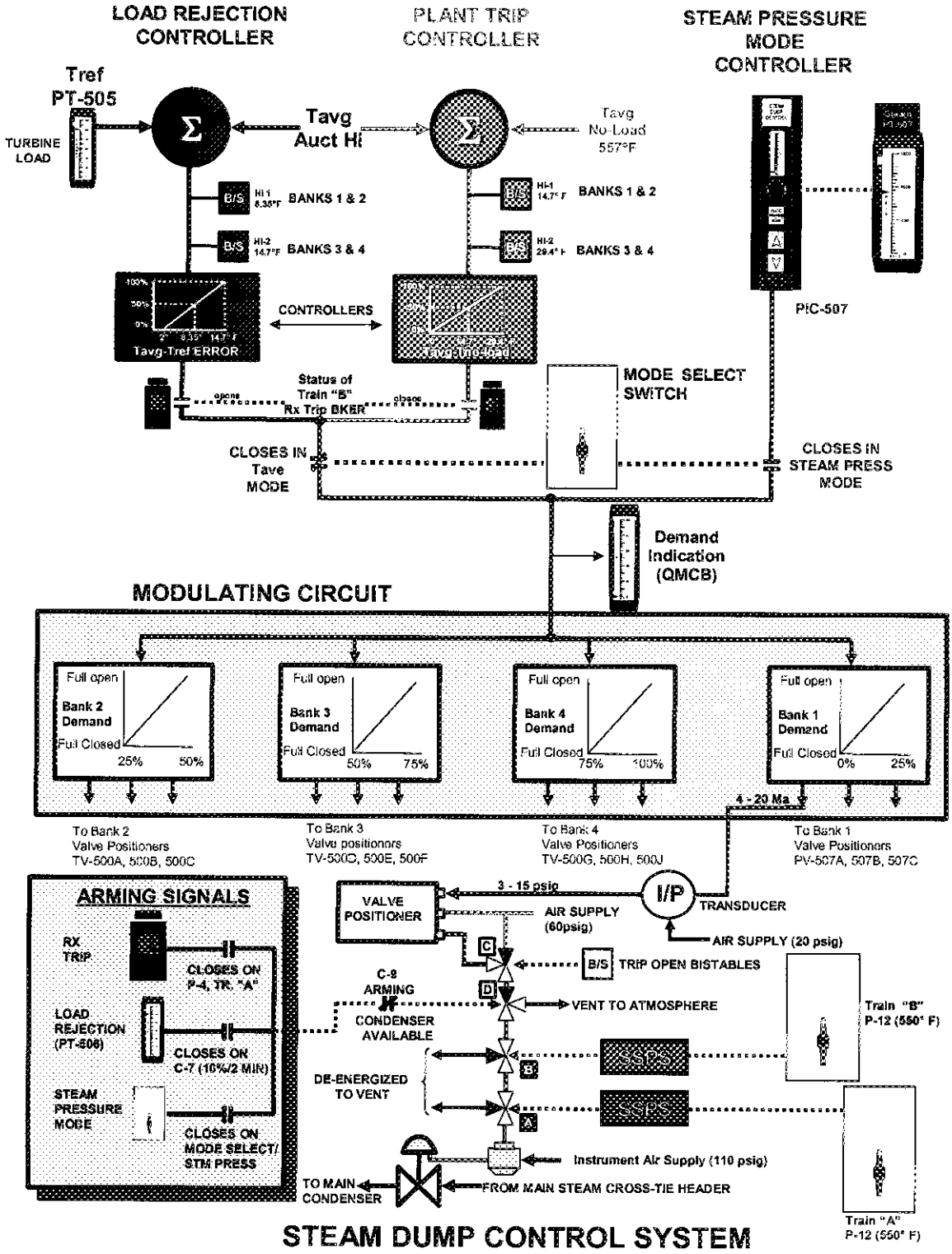

STEAM DUMP CONTROL SYSTEM

Steam Pressure Controller:

The purpose of the Header Pressure Controller is to allow the operator to control Reactor Coolant System temperature by controlling main steamline header pressure. The controller receives a continuous input from pressure transmitter PT-507. This pressure signal is summed with an operator-adjusted setpoint to produce an error signal.

The operator controls consist of a typical Hagan auto manual controller on the QMCB. The controller's setpoint potentiometer is a ten-turn pot with ten divisions per turn. The range of PT-507 is 0-1500 psig. This results in 150 psig per turn and 15 psig per division. In other words, the operator can control main steamline header pressure within 15 psig. This provides the operator with very fine control of main steamline header pressure during startups, shutdowns and cooldowns.

The controller produces a continuous error signal if any difference exists between main steamline header pressure and the operator-adjusted setpoint. The error signal is applied to the modulating circuit only when the steam dump mode select switch is in the steam pressure position. Below the Lo-Lo Tave interlock (550°F), the error signal is applied only to Bank 1 modulating circuit. Above 550°F., the error signal is applied to all modulating circuits.

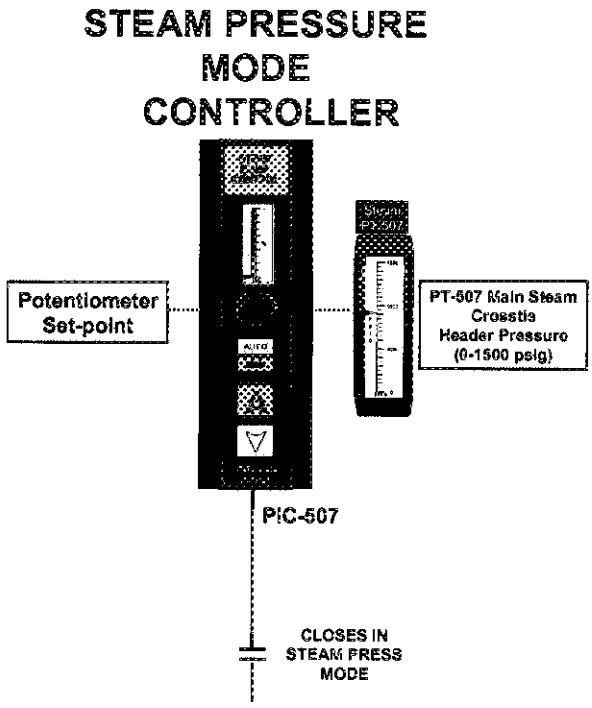

the second bistable is reached. At an error signal of 14.7°F, the second bistable trips open Banks 3 and 4 steam dump valves TV-500 (D, E, F, G, H, J) and the Steam Dump Control System is at full capacity. The steam dump valves will return to a modulating type of operation once the error signal drops below the bistable setpoint.

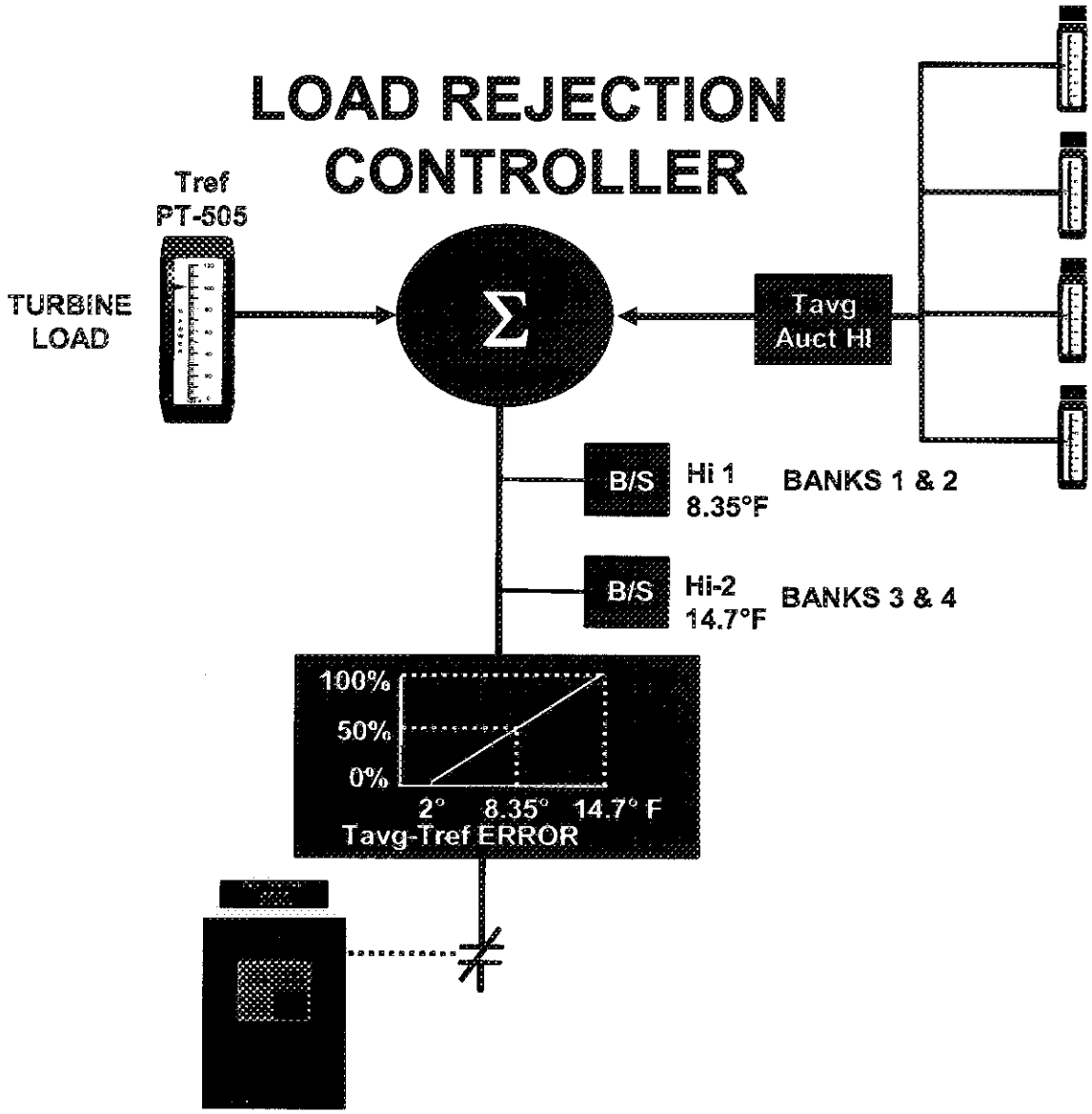

INSTRUMENTATION AND CONTROL

Load Rejection Controller:

In order for the **Load Rejection Controller's** demand signal to position any of the steam dump valves, the arming circuit must energize the solenoid (D) for each of the steam dump valves. This is accomplished using a loss-of-load comparator circuit, which receives input signals from the **high-pressure turbine first stage pressure transmitter (PT-506).** The comparator circuit senses a change of first stage pressure (load change), and if the load change is in excess of 10% in 120 seconds, a loss-of-load bistable trips on. Once on, a relay is energized and closes the loss-of-load contact in the arming circuit. This action in turn energizes the solenoid (D). Once the steam dump is armed, a **loss-of-load light (C7) illuminates** on the main control board. Once on, this bistable can only be turned off by momentarily placing the **mode selector switch in the RESET position.**

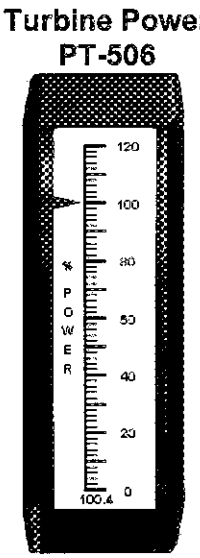

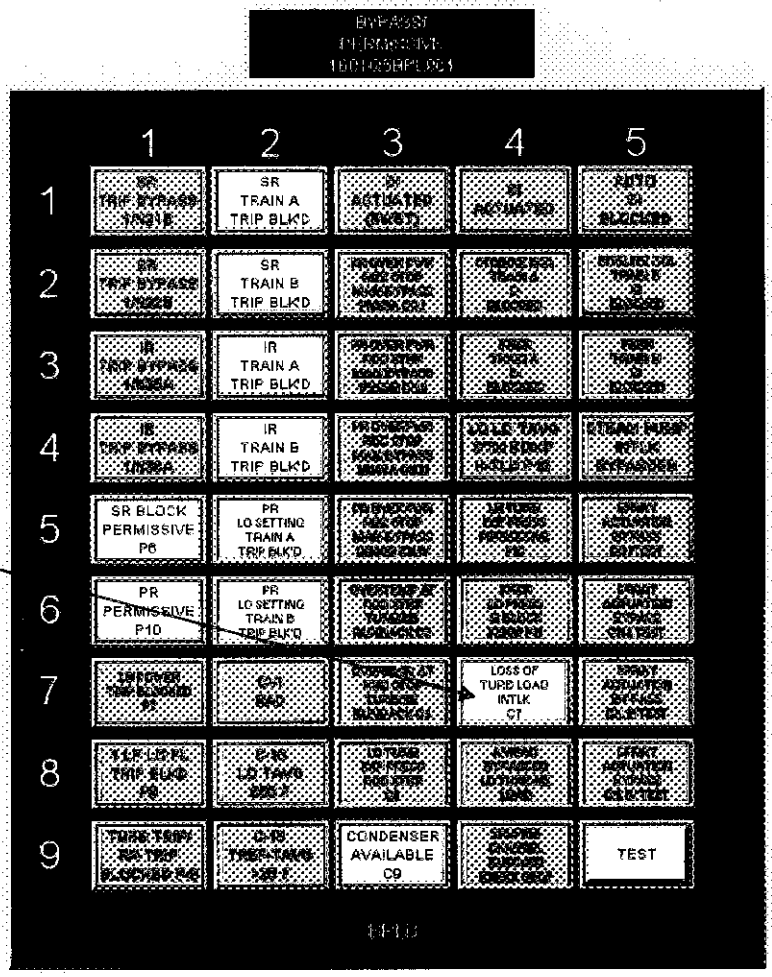

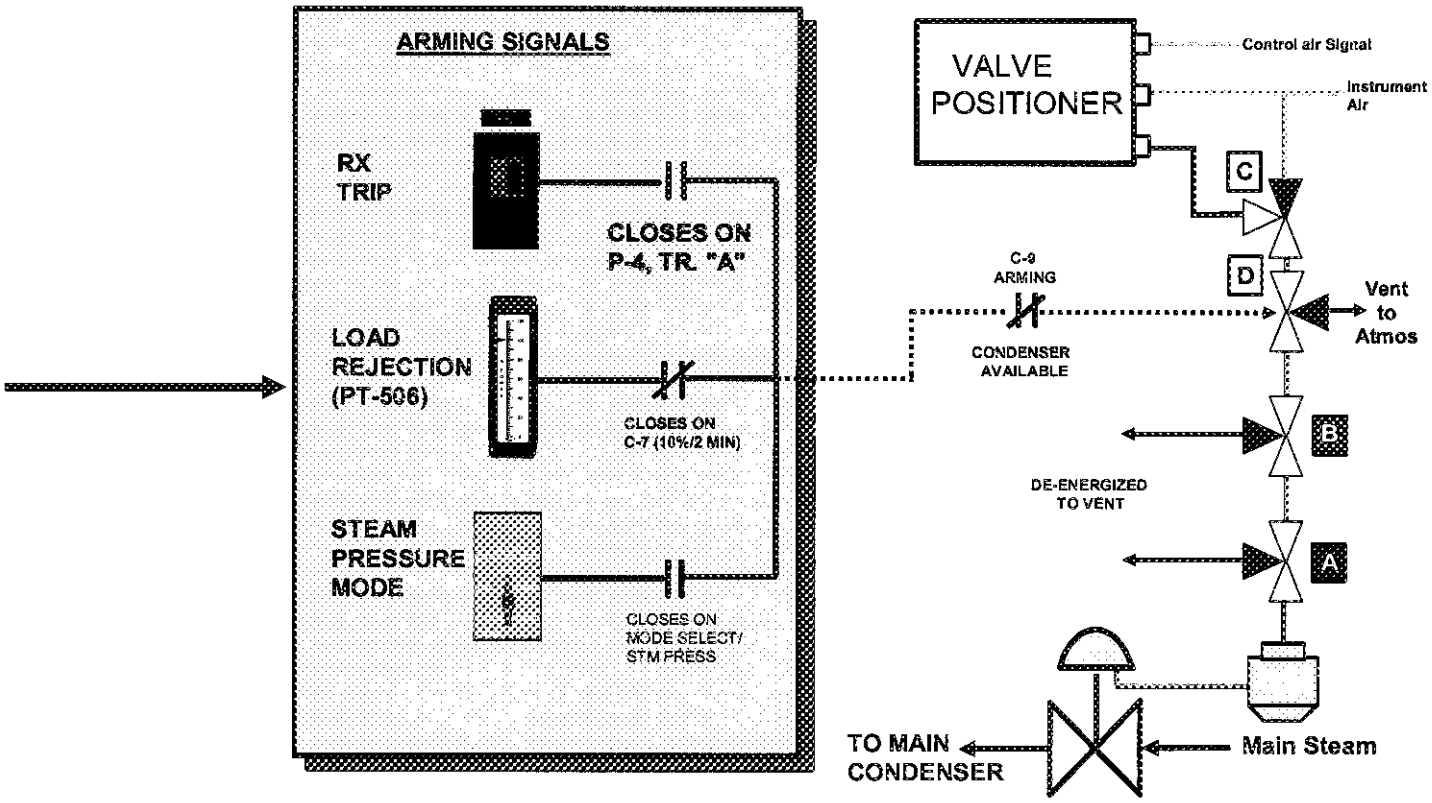

The **Load Rejection Controller** needs a temperature error signal between actual T_{avg} and T_{ref} to produce its output demand signal. The T_{avg} signal comes from an auctioneered high T_{avg} circuit, which senses all the loop temperatures and output the highest loop to be used in the summing network. The T_{ref} signal is developed from the impulse turbine **first stage pressure transmitter (PT-505)**. The pressure signal represents turbine load. Therefore, as turbine load changes, the T_{ref} signal will change. The summing network compares the two signals and sends the temperature error signal to the load rejection controller and two temperature bistables. The load rejection controller operates as previously described earlier. Each of the temperature bistables functions to trip one-half of the steam dump valves open if the error signal becomes too large. One bistable trips open Bank "1" PV-507 (A,B,C) and bank "2" steam dump valves TV-500 (A,B,C) if the error signal reaches 8.35°F. This is accomplished through relays, which energize the solenoid (C) and allow a full supply air signal to trip the valves open in 3 seconds. The other valves continue to be modulated open until the setpoint of

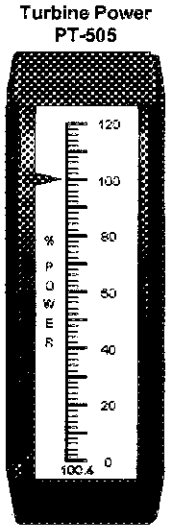

BANK QUESTION

Given the following Unit 1 conditions:
- The reactor is at 90% power
- Rod control is in automatic with CBD at 196 steps
- All control systems are in their normal alignment
- Turbine load decreases to 850 MWe in 30 seconds
- PT-506, turbine impulse pressure, sticks at 90%

Which one of the following is the correct response to this transient?

A. The steam dump Tave controller automatically opens the steam dumps due to the loss of turbine load. Rods will have to be manually driven in to lower RCS temperature.

B. The steam dump steam pressure controller automatically opens the steam dumps due to the increased steam header pressure. Rods automatically insert to reduce Tave.

C. The steam dump Tave controller generates a demand signal, but the dumps remain shut. Rods automatically insert to lower Tave.

D. The steam dump pressure controller generates a demand signal, but the dumps remain shut. Rods must be manually inserted to lower Tave.

LO-LP-21000-00-01

34. 039K5.08 001

The following Unit 2 conditions exist following completion of a critical approach:

- Core Cycle Burnup = 15000 MWd/MTU
- Reactor Power is $2 \times 10^{-3}\%$
- RCS Temperature is being controlled at 557°F using steam dumps in their normal configuration
- A contact in the steam pressure portion of the arming circuit for the steam dumps fails open

Which ONE of the following correctly describes the effect on RCS temperature and reactivity?

A. RCS temperature increases. Positive reactivity is added to the reactor.

B. ✓ RCS temperature increases. Negative reactivity is added to the reactor.

C. RCS temperature decreases. Positive reactivity is added to the reactor.

D. RCS temperature decreases. Negative reactivity is added to the reactor.

ENSURE UTILITY VERIFIES VERBIAGE OF "CRITICAL APPROACH." WOULD THE UTILITY BE MORE LIKELY TO USE THE PHRASE "APPROACH TO CRITICAL?" OR WOULD THEY USE THE PHRASES INTERCHANGEABLY?

K/A
039 Main and Reheat Steam
K5.08 Knowledge of the operational implications of the following concepts as they apply to the MRSS: Effect of steam removal on reactivity.

K/A MATCH ANALYSIS
The steam pressure contact in the arming circuit failing open will close the air supply to the dumps, thus reducing steam demand. Reducing steam demand will affect RCS temp, which in turn affects reactivity. Therefore, the K/A is met because the operational implications of a change in steam removal is that the reactivity is affected.

ANSWER / DISTRACTOR ANALYSIS
A. Incorrect. See correct answer for explanation. Plausible because applicant may not realize that the MTC will be negative for a critical approach at 1500 MWd/MTU and the RCS temperature actually will rise.
B. Correct. The steam pressure contact opening will de-energize the arming relay, which de-energizes the solenoid, which blocks the air supply to the dump valve actuators. Therefore, the dumps are closed, reducing steam demand, causing an RCS heatup. Due to the core having 1500 MWd/MTU burnup, the MTC will be negative, which causes negative reactivity to be added during the heatup.
C. Incorrect. See correct answer for explanation. Plausible because applicant may not realize that the MTC will be negative for a critical approach at 1500 MWd/MTU and applicant may not realize that opening of the contact will cause dumps to close.
D. Incorrect. See correct answer for explanation. Plausible because applicant may not realize that opening of the contact will cause dumps to close.

REFERENCES
1. LO-LP-61201-20-C, Reactor Startup, Rev. 20, 02/22/2002, Page 8.
2. V-LO-TX21201, Steam Dumps, Pages 28 and 37.
3. 12003-C, Reactor Startup (Mode 3 to Mode 2), Rev. 39, 05/11/2004, Pages 5, 21, and 22.

MCS	Time:	1	Points:	1.00	Version:	0 1 2 3 4 5 6 7 8 9	
					Answer:	B D B C D D A D B C	Scramble Range: A - D
Tier:		2			Group:	1	
Key Word:		DUMPS REACTIVITY			Cog Level:	C/A 3.6	
Source:		N			Exam:	VG05301	
Test:		R			Author/Reviewer:	MAB/RSB	

34. 039K5.08 001

The following Unit 2 conditions exist following completion of a critical approach:

- Core Cycle Burnup = 15000 MWd/MTU
- Reactor Power is 2×10^{-3}%
- RCS Temperature is being controlled at 557°F using steam dumps in their normal configuration
- The steam pressure contact in the arming circuit for the steam dumps fails open

Which ONE of the following correctly describes the effect on RCS temperature and reactivity?

A. RCS temperature increases. Positive reactivity is added to the reactor.

B. ✓ RCS temperature increases. Negative reactivity is added to the reactor.

C. RCS temperature decreases. Positive reactivity is added to the reactor.

D. RCS temperature decreases. Negative reactivity is added to the reactor.

ENSURE UTILITY VERIFIES VERBIAGE OF "CRITICAL APPROACH." WOULD THE UTILITY BE MORE LIKELY TO USE THE PHRASE "APPROACH TO CRITICAL?" OR WOULD THEY USE THE PHRASES INTERCHANGEABLY?

K/A
039 Main and Reheat Steam
K5.08 Knowledge of the operational implications of the following concepts as they apply to the MRSS: Effect of steam removal on reactivity.

K/A MATCH ANALYSIS
The steam pressure contact in the arming circuit failing open will close the air supply to the dumps, thus reducing steam demand. Reducing steam demand will affect RCS temp, which in turn affects reactivity. Therefore, the K/A is met because the operational implications of a change in steam removal is that the reactivity is affected.

ANSWER / DISTRACTOR ANALYSIS
A. Incorrect. See correct answer for explanation. Plausible because applicant may not realize that the MTC will be negative for a critical approach at 1500 MWd/MTU and the RCS temperature actually will rise.
B. Correct. The steam pressure contact opening will de-energize the arming relay, which de-energizes the solenoid, which blocks the air supply to the dump valve actuators. Therefore, the dumps are closed, reducing steam demand, causing an RCS heatup. Due to the core having 1500 MWd/MTU burnup, the MTC will be negative, which causes negative reactivity to be added during the heatup.
C. Incorrect. See correct answer for explanation. Plausible because applicant may not realize that the MTC will be negative for a critical approach at 1500 MWd/MTU and applicant may not realize that opening of the contact will cause dumps to close.
D. Incorrect. See correct answer for explanation. Plausible because applicant may not realize that opening of the contact will cause dumps to close.

REFERENCES
1. LO-LP-61201-20-C, Reactor Startup, Rev. 20, 02/22/2002, Page 8.
2. V-LO-TX21201, Steam Dumps, Pages 28 and 37.
3. 12003-C, Reactor Startup (Mode 3 to Mode 2), Rev. 39, 05/11/2004, Pages 5, 21, and 22.

MCS	Time:	1	Points:	1.00	Version:	0 1 2 3 4 5 6 7 8 9	
					Answer:	B D B C D D A D B C	Scramble Range: A - D
Tier:		2			Group:	1	
Key Word:		DUMPS REACTIVITY			Cog Level:	C/A 3.6	
Source:		N			Exam:	VG05301	
Test:		R			Author/Reviewer:	MAB/RSB	

QUESTIONS REPORT
for Voglte 2005-301 Draft

1. 039K5.08 001

The following Unit 2 conditions exist following completion of a critical approach:

- Core Cycle Burnup = ~~1500~~ ~~10000~~ 15000 MWd/MTU
- Reactor Power is 2 x 10^{-3}%
- RCS Temperature is being controlled at 557°F using steam dumps in their normal configuration
- ~~The steam pressure contact~~ in the arming circuit for the steam dumps fails open

learn for now

Which ONE of the following correctly describes the effect on RCS temperature and reactivity?

A. RCS temperature increases. Positive reactivity is added to the reactor.

B. RCS temperature increases. Negative reactivity is added to the reactor.

C. RCS temperature decreases. Positive reactivity is added to the reactor.

D. RCS temperature decreases. Negative reactivity is added to the reactor.

ENSURE UTILITY VERIFIES VERBIAGE OF "CRITICAL APPROACH." WOULD THE UTILITY BE MORE LIKELY TO USE THE PHRASE "APPROACH TO CRITICAL?" OR WOULD THEY USE THE PHRASES INTERCHANGEABLY?

K/A
039 Main and Reheat Steam
K5.08 Knowledge of the operational implications of the following concepts as they apply to the MRSS: Effect of steam removal on reactivity.

K/A MATCH ANALYSIS
The steam pressure contact in the arming circuit failing open will close the air supply to the dumps, thus reducing steam demand. Reducing steam demand will affect RCS temp, which in turn affects reactivity. Therefore, the K/A is met because the operational implications of a change in steam removal is that the reactivity is affected.

ANSWER / DISTRACTOR ANALYSIS
A. Incorrect. See correct answer for explanation. Plausible because applicant may not realize that the MTC will be negative for a critical approach at 1500 MWd/MTU and the RCS temperature actually will rise.
B. Correct. The steam pressure contact opening will de-energize the arming relay, which de-energizes the solenoid, which blocks the air supply to the dump valve actuators. Therefore, the dumps are closed, reducing steam demand, causing an RCS heatup. Due to the core having 1500 MWd/MTU burnup, the MTC will be negative, which causes negative reactivity to be added during the heatup.
C. Incorrect. See correct answer for explanation. Plausible because applicant may not realize that the MTC will be negative for a critical approach at 1500 MWd/MTU and applicant may not realize that opening of the contact will cause dumps to close.
D. Incorrect. See correct answer for explanation. Plausible because applicant may not realize that opening of the contact will cause dumps to close.

REFERENCES
1. LO-LP-61201-20-C, Reactor Startup, Rev. 20, 02/22/2002, Page 8.
2. V-LO-TX21201, Steam Dumps, Pages 28 and 37.
3. 12003-C, Reactor Startup (Mode 3 to Mode 2), Rev. 39, 05/11/2004, Pages 5, 21, and 22.

MCS	Time:	1	Points:	1.00	Version:	0 1 2 3 4 5 6 7 8 9	
					Answer:	B D B C D D A D B C	Scramble Range: A - D
Tier:		2			Group:	1	
Key Word:		DUMPS REACTIVITY			Cog Level:	C/A 3.6	
Source:		N			Exam:	VG05301	
Test:		R			Author/Reviewer:	MAB/RSB	

PRB REVIEW REQUIRED

REACTOR STARTUP (MODE 3 TO MODE 2)

PROCEDURE USAGE REQUIREMENTS-		SECTIONS
Continuous Use:	Procedure must be open and readily available at the work location. Follow procedure step by step unless otherwise directed.	**ALL**
Reference Use:	Procedure or applicable section(s) available at the work location for ready reference by person performing steps.	**NONE**
Information Use:	Available on plant site for reference as needed.	**NONE**

0 **INITIAL CONDITIONS**

.1 The plant is in Mode 3 with all control rod banks inserted and the shutdown banks withdrawn or inserted.

3.2 RCS temperature is stabilized at 557 ±1°F under control of the steam dumps in steam pressure mode or by use of the steam generator atmospheric relief valves.

3.3 RCS Pressure is stable at 2235 ± 15 psig.

3.4 Pressurizer level is 20% to 40%. (CO 3208)

3.5 All reactor coolant pumps are operating.

3.6 Normal Charging and letdown in service with letdown purification aligned. (CO 5274)

3.7 SG levels are stable between 60% and 70% NR with Auxiliary Feedwater (AFW) operating. (CO 161, CO 6707, CO 21521)

INITIALS

2.26 RAISE power to 2 X 10^{-3}% in the Intermediate Range by adjusting control rods as necessary to establish a SUR of approximately 0.5 dpm. _____

4.2.27 STABILIZE power at an Intermediate Range indication of approximately 2 X 10^{-3}% and COMPLETE:

a. OSP 14940, "Estimated Critical Condition Calculation" Data Sheet 1, Actual Critical Data, _____*

-OR-

b. 88010-C, "Computer Calculation Of Estimated Critical Conditions" Data Sheet 4. _____*

c. PLACE a copy of the above Data Sheet(s) in the Start-up Log tab of the Reactor Trip Log. _____

d. If this reactor startup **IS NOT** a dilution to criticality for LPPT, Tavg recording per Data Sheet 2 can be terminated if ALB12A05 is not illuminated. _____

Formatted: Font: Bold, Underline

NOTE

The Avg/Tref Deviation alarm, ALB12A05, provides actions to maintain Tavg above 551°F, the minimum temperature for criticality.

4.2.28 MONITOR "Tavg/Tref Deviation" alarm, ALB12A05, during the remainder of the startup and take corrective action as directed to maintain Tavg at 557°F ±2°F. (TS SR 3.4.2.1) (CO 32496)

INITIALS

4.2.29 UNBLOCK both Source Range channels HFASA circuits per 13501, "Nuclear Instrumentation System".

(1) Source Range Channel N31 _____

(2) Source Range Channel N32 _____

4.2.30 If this reactor startup was a dilution to criticality for LPPT, PERFORM LPPT-GAE/GBE-01. _____

4.2.31 SELECT one channel of Power Range NIs to Recorder NR-45. _____

ANNOTATE chart to reflect channels selected.

4.2.32 ADJUST Shutdown and Control Rod Banks to the Specified ARO Position per 13502, "Control Rod Drive And Position Indication System". _____

CAUTION

Ensure alternate indications of reactor power level are observed to back up nuclear instrumentation readings. (CO 21996)

4.2.33 RAISE power to approximately 1% to 3%. _____

4.2.34 ENSURE steam dumps or, if applicable, SG atmospheric relief valves, MAINTAIN Tavg at 557°F ± 2°F. _____

4.2.35 CONTINUE to power operation per 12004-C, "Power Operation (Mode 1)" _____

-OR-

COMMENCE reactor shutdown per 12005-C, "Reactor Shutdown to Hot Standby". _____

Steam Header Pressure Control Signal:

When the mode selector switch is placed in the **"STEAM PRESSURE MODE"** position, both the load rejection and turbine trip controllers are defeated, and the header pressure controller will control the demand signals to the modulating circuit.

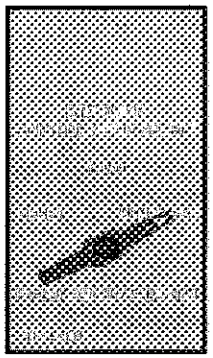

The steam pressure contact in the arming circuit closes when the mode selector is switched to STEAM PRESSURE. This energizes the arming relay. The arming relay closes the arming contact to energize the solenoid (D) for each of the steam dump valves.

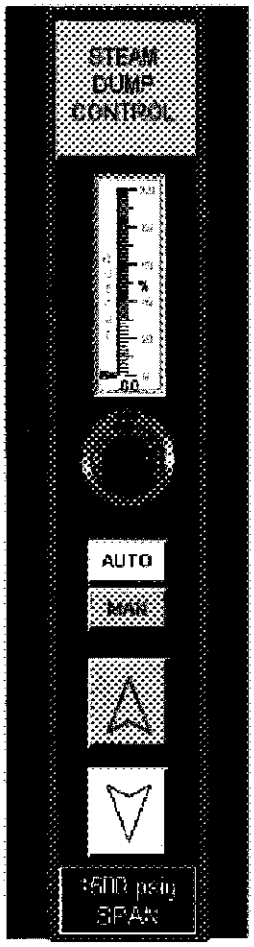

The header pressure controller generates demand signals in the manner discussed earlier in this chapter. A signal comparator whose inputs come from the main steam crosstie (PT-507) header pressure transmitter and a pressure setpoint controller (Hagan) located on the main control room panel generates the pressure error signal that it receives. The pressure from the crosstie header is used so that the average main steam header pressure will be maintained. The signal comparator simply compares the two pressure signals and generates an error signal to the header pressure controller.

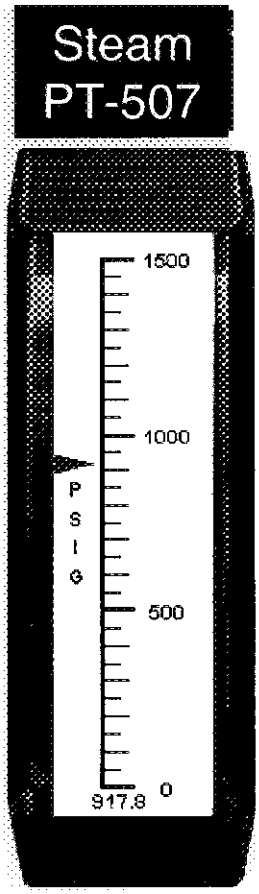

Steam Dump Mode Select Switch

A three-position mode selector switch is provided on the main control room panel to select the mode of steam dump control. The three positions are:

a. Reset (Spring-Returned to T_{avg})

b. Tavg

c. Steam Pressure

The **TAVG** position is selected during power operations. The unit operating procedure determines when the TAVG position will be used. Selecting the TAVG position removes the header pressure controller from service and places the load rejection controller in service. The occurrence of a reactor trip will remove the load rejection controller from service and place the plant trip controller in service. The TAVG position also allows the trip open bistables to operate, provided their setpoints are exceeded.

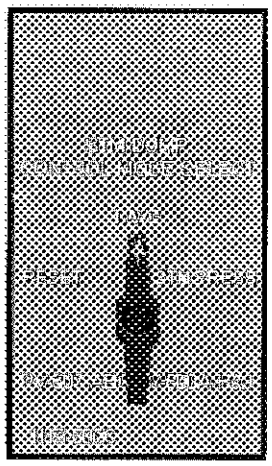

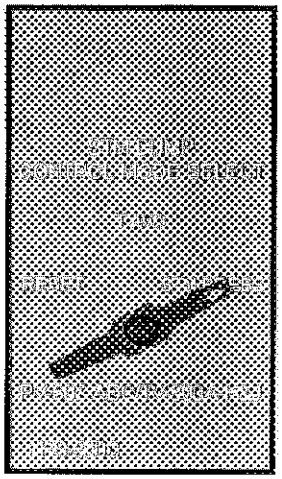

The **STEAM PRESSURE** position is used during startups, shutdowns and cooldowns. The unit operating procedures determines when the STEAM PRESSURE position is used. The STEAM PRESSURE position removes the load rejection controller, the plant trip controller, and the trip open bistables from service and places the header pressure controller in service. In addition, the steam dumps are armed, by this switch position.

SOUTHERN COMPANY

Energy to Serve Your World™

VOGTLE ELECTRIC GENERATING PLANT

TRAINING LESSON PLAN

TITLE:	**REACTOR STARTUP**	NUMBER:	**LO-LP-61201-20-C**
PROGRAM:	LICENSED OPERATOR TRAINING	REVISION:	20
SME:	P. VANNIER	DATE:	02/22/02
APPROVED:	***D. Scukanec***	DATE:	2/22/2002

INSTRUCTOR GUIDELINES:

I. FORMAT

A. Lecture with visual aids

II. MATERIALS

A. Overhead projector

B. White board with markers

III. EVALUATION

A. Written or oral exam in conjunction with other lesson plans

IV. TASK(S)

A. Ensure students have latest revision of 12003-C, "Reactor Startup"

LO-TA-61001 Startup Reactor
LO-TA-61002 Establish Pre-Critical Conditions

d) The key word SHOULD will allow the SS to decide whether or not to strictly adhere to the above parameter guides when startup is commenced later on in the procedure

2) All RCS loops are in operation

3) CVCS Makeup Control System is available and operating (preferably in AUTO)

4) CVCS Letdown Purification SHOULD be in progress

5) Following secondary systems SHOULD be as described in their SOPs — **Before POAR**

a. Main Turbine on Turning Gear

b. Main Turbine warming 4 hours to rolling

c. SG NR levels are stable 60% to 70% with AFW. — **Objective 8d**

d. Steam dumps on the condenser or ARVs — **Dumps preferred**

e. Circulating water is in operation

b. Operating Boundaries

1) Tavg required ≥ 551°F throughout S/U

a) Logged every 15 minutes

b) Tavg controlled by secondary activities (AFW and steam rate, including aux steam) — **Precaution**

2) SR trip at $10E^5$ CPS — **Objective 22**

a) Enabled block at IR 2^{-5} % on 1/2 detectors

(1) IR 1.0^{-6} % ≅ SR 3^3 cps

(2) Overlap important to enable block/ prevent trip.

b) 2/2 HS's required, one per train of SSPS

(1) Each SR channel requires block to two SSPS trains — **Discuss what one switch would do**

c) Status lights (2) for P-6 permissives illuminate

d) Block indication on BPLB for each train

e) There is a caution inserted to alert the operator that if the SR is not blocked the reactor will trip on high source range flux

This happened at Plant Vogtle LER 87.032

f) P-6 is a one out of two at 2^{-5}% Intermediate Range NIS interlock that allows a manual block of the Source Range High Flux Trip at 10^5 cps.

3) Only one method of +ρ added when subcritical

a) Criticality usually happens before SR block

Depends on CR_i

b) After critical call, can add + reactivity by more than one method at a time (i.e. dilution)

Critical reactor is a more decisive ρ indication

4) Hold point at 2^{-3} % for data taking

5) Final stopping point is 1-3% power

a) Power is raised to approximately 1% to 3% power. Caution must be given as to the rate of power change the operator chooses. If too high a SUR is achieved then the operator may have problems controlling the power.
As power increases the effects of the reactivity coefficients begin to be seen as reactor power achieves the point of adding heat.
When this occurs the operator must withdraw rods to raise power

Operator MUST also use delta T as power ind.

b) Effects due to Xenon may also have to be accounted for if this is a restart after a trip

Review Xe as nec.

c) When the point of adding heat is reached the RCS begins heating up. Indications of this heatup are: (POAH approx. 2 $X10^{-1}$ %)

(1) Pressurizer Level increasing

(2) VCT level increasing

(3) RCS temperature increasing

(4) Steam Dumps or ARVs opening to control no load Tavg

(5) Pressurizer pressure increasing

(6) IR level stabilizes and SUR goes to zero

35. 041K6.03 001

Unit 1 is at 100% rated thermal power with ALB10-B06, ROD CONTROL URGENT FAILURE, in alarm. Control Rods are in automatic mode. The turbine governor valves close unexpectedly resulting in a 10% load rejection over a 90 second period.

Which ONE of the following correctly describes how RCS temperature is controlled given the above conditions?

A. RCS temperature will go down due to higher xenon concentration with no rod motion and no steam dump operation.

B. RCS temperature will be controlled entirely by control rods because the power change is not enough to require steam dump operation.

C✓ RCS temperature will be controlled entirely by steam dumps because the control rods will not move.

D. RCS temperature will be controlled with a combination of control rods and steam dumps because the load rejection occurs quickly.

K/A
041 Steam Dump/Turbine Bypass Control
K6.03 Knowledge of the effect of a loss or malfunction on the following will have on the SDS: Controller and positioners, including ICS, S/G, CRDS.

K/A MATCH ANALYSIS
A malfunction of control rods exists as evidenced by the alarm. The effect on the steam dumps is that the dumps will actually be required to maintain RCS temp, which would not necessarily be the case if rods were able to automatically insert.

ANSWER / DISTRACTOR ANALYSIS
A. Incorrect. Steam dumps will operate as stated in correct answer. Plausible because rods will not operate and applicant may not make the connection that dumps are armed with a demand signal.
B. Incorrect. Rods will not move due to the urgent failure. Plausible if applicant does not know that the alarm is indication that rods will not move because rods are capable of handling 10% load rejects without the help of the dumps.
C. Correct. Rods will not move due to the urgent failure. Steam dumps will arm with a 10% rejection in less than 2 minutes. Therefore, with an arming signal and a Tave-Tref deviation (hence a demand signal), dumps will open.
D. Incorrect. Rods will not move due to the urgent failure. Plausible if applicant does not know that the alarm is indication that rods will not move.

REFERENCES
1. V-LO-TX-21201, Steam Dumps.
2. V-LO-TX-27101, Rod Control.
3. ALB10-B06, ROD CONTROL URGENT FAILURE, Rev. 44, 04/28/2004.

MCS	Time:	1	Points:	1.00	Version:	0 1 2 3 4 5 6 7 8 9	
					Answer:	C B D D A B C B B B	Scramble Range: A - D
Tier:	2				Group:	2	
Key Word:	RODS STEAM DUMPS				Cog Level:	C/A 2.7	
Source:	N				Exam:	VG05301	
Test:	R				Author/Reviewer:	MAB/RSB	

35. 041K6.03 001

Unit 1 is at 100% rated thermal power with ALB10-B06, ROD CONTROL URGENT FAILURE, in alarm. Control Rods are in automatic mode. The turbine governor valves close unexpectedly resulting in a 10% load rejection over a 90 second period.

Which ONE of the following correctly describes how RCS temperature is controlled given the above conditions?

A. RCS temperature will go down due to higher xenon concentration with no rod motion and no steam dump operation.

B. RCS temperature will be controlled entirely by control rods because the power change is not enough to require steam dump operation.

C✓ RCS temperature will be controlled entirely by steam dumps because the control rods will not move.

D. RCS temperature will be controlled with a combination of control rods and steam dumps because the load rejection occurs quickly.

K/A
041 Steam Dump/Turbine Bypass Control
K6.03 Knowledge of the effect of a loss or malfunction on the following will have on the SDS: Controller and positioners, including ICS, S/G, CRDS.

K/A MATCH ANALYSIS
A malfunction of control rods exists as evidenced by the alarm. The effect on the steam dumps is that the dumps will actually be required to maintain RCS temp, which would not necessarily be the case if rods were able to automatically insert.

ANSWER / DISTRACTOR ANALYSIS
A. Incorrect. Steam dumps will operate as stated in correct answer. Plausible because rods will not operate and applicant may not make the connection that dumps are armed with a demand signal.
B. Incorrect. Rods will not move due to the urgent failure. Plausible if applicant does not know that the alarm is indication that rods will not move because rods are capable of handling 10% load rejects without the help of the dumps.
C. Correct. Rods will not move due to the urgent failure. Steam dumps will arm with a 10% rejection in less than 2 minutes. Therefore, with an arming signal and a Tave-Tref deviation (hence a demand signal), dumps will open.
D. Incorrect. Rods will not move due to the urgent failure. Plausible if applicant does not know that the alarm is indication that rods will not move.

REFERENCES
1. V-LO-TX-21201, Steam Dumps.
2. V-LO-TX-27101, Rod Control.
3. ALB10-B06, ROD CONTROL URGENT FAILURE, Rev. 44, 04/28/2004.

MCS	Time:	1	Points:	1.00	Version:	0 1 2 3 4 5 6 7 8 9	
					Answer:	C B D D A B C B B B	Scramble Range: A - D
Tier:		2			Group:	2	
Key Word:		RODS STEAM DUMPS			Cog Level:	C/A 2.7	
Source:		N			Exam:	VG05301	
Test:		R			Author/Reviewer:	MAB/RSB	

1. 041K6.03 001

Unit 1 is at 100% rated thermal power with ALB10-B06, ROD CONTROL URGENT FAILURE, in alarm. Control Rods are in automatic mode. The turbine governor valves close unexpectedly resulting in a 10% load rejection over a 90 second period.

Which ONE of the following correctly describes how RCS temperature is controlled given the above conditions?

A. RCS temperature will go down due to higher xenon concentration with no rod motion and no steam dump operation.

B. RCS temperature will be controlled entirely by control rods because the power change is not enough to require steam dump operation.

C. RCS temperature will be controlled entirely by steam dumps because the control rods will not move.

D. RCS temperature will be controlled with a combination of control rods and steam dumps because the load rejection occurs quickly.

K/A
041 Steam Dump/Turbine Bypass Control
K6.03 Knowledge of the effect of a loss or malfunction on the following will have on the SDS: Controller and positioners, including ICS, S/G, CRDS.

K/A MATCH ANALYSIS
A malfunction of control rods exists as evidenced by the alarm. The effect on the steam dumps is that the dumps will actually be required to maintain RCS temp, which would not necessarily be the case if rods were able to automatically insert.

ANSWER / DISTRACTOR ANALYSIS
A. Incorrect. Steam dumps will operate as stated in correct answer. Plausible because rods will not operate and applicant may not make the connection that dumps are armed with a demand signal.
B. Incorrect. Rods will not move due to the urgent failure. Plausible if applicant does not know that the alarm is indication that rods will not move because rods are capable of handling 10% load rejects without the help of the dumps.
C. Correct. Rods will not move due to the urgent failure. Steam dumps will arm with a 10% rejection in less than 2 minutes. Therefore, with an arming signal and a Tave-Tref deviation (hence a demand signal), dumps will open.
D. Incorrect. Rods will not move due to the urgent failure. Plausible if applicant does not know that the alarm is indication that rods will not move.

REFERENCES
1. V-LO-TX-21201, Steam Dumps.
2. V-LO-TX-27101, Rod Control.
3. ALB10-B06, ROD CONTROL URGENT FAILURE, Rev. 44, 04/28/2004.

MCS	Time: 1	Points: 1.00	Version:	0 1 2 3 4 5 6 7 8 9		
			Answer:	C B D D A B C B B B	Scramble Range: A - D	
Tier:	2			Group:	2	
Key Word:	RODS STEAM DUMPS			Cog Level:	C/A 2.7	
Source:	N			Exam:	VG05301	
Test:	R			Author/Reviewer:	MAB/RSB	

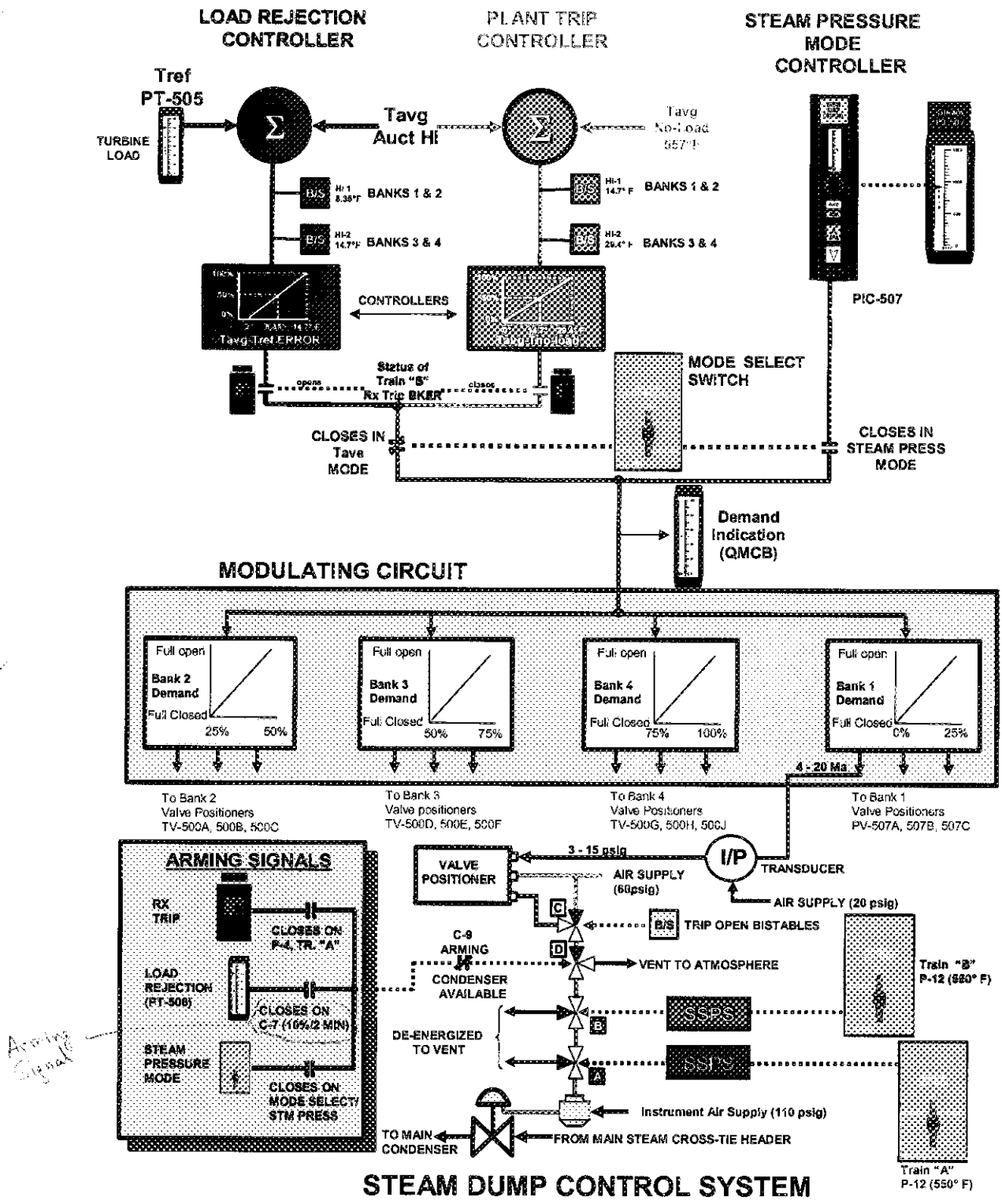

STEAM DUMP CONTROL SYSTEM

A. INTRODUCTION

There are basically two ways the operator can affect the reactivity of the reactor core; change its temperature or change the amount of neutron absorbers in the core. During normal operation, temperature is maintained on a program value so it is not usually used to control the reactor. Changing amount of neutron absorbers in the core can be done by changing the boron concentration using CVCS or changing the position of the control rods in the core. Of these two methods, moving control rods is the fastest method to control Reactor power. The Rod Control System functions to position these neutron absorbing control rods in the reactor core.

Purpose of Rod Control System is to perform the following:

Control reactor temperature at power
Control reactor power during startup/shutdown at low power
Provide immediate shutdown capability

The Rod Control System will automatically maintain Tavg with the programmed Tavg by inserting control rods, for the following design transients without a reactor trip, steam dump operation, or RCS pressure relief if inward rod motion is required:

a. a turbine load reduction step change up to 10 percent

b. a unloading rate up to a 5 percent/minute ramp

If outward motion is necessary, manual operation of the Rod Control system is necessary due to the automatic rod withdrawal capability being disabled. The Rod Control System also provides the operator with indications, alarms, automatic control system failure protection, and protective interlocks.

The Rod Control System's ability to control a 10 percent step load reduction when in automatic coupled with the steam dumps 40 percent capability allows the plant to sustain at 50 percent load rejection without a plant trip.

B. SYSTEM DESCRIPTION

The Rod Control System controls the motion of the 53 full length control rods. There are two types of rods, Shutdown rods and Control rods. The Shutdown rods are rods that are maintained either fully inserted or fully withdrawn. Their purpose is to shutdown the reactor and maintain required Shutdown Margin. Shutdown rods are only operated manually. Control rods are rods withdrawn to startup the reactor and control reactor power or temperature and axial flux. They may be partially inserted into the core for control and can be operated either manually or automatically.

WINDOW B06

ORIGIN	SETPOINT	ROD CONTROL URGENT FAILURE
Power Cabinet Logic Cabinet	Not Applicable	

1.0 PROBABLE CAUSE

1. Power Cabinet Urgent Failure:

   a. Phase fault - voltage to coils has excessive ripple due to a blown fuse or thyristor that has lost gate control,
   b. Regulation failure - the coil current does not match current order within a preset time or full current is on too long,
   c. Multiplexing failure - power is being supplied to a movable or lift coil when movement of that rod has not been commanded,
   d. Logic failure - simultaneous zero current orders to stationary and movable grippers,
   e. Loose Card - loose or removed printed circuit card.

2. Logic Cabinet Urgent Failure:

   a. Pulser fails to generate pulses when signaled,
   b. Slave Cycler receives "Go" order signal before completing previous step,
   c. Loose circuit card.

WINDOW B06
(Continued)

2.0 AUTOMATIC ACTIONS

Prevents automatic and manual rod motion by performing the following:

POWER CABINET URGENT FAILURE

CAUTIONS

a. Rods powered from the unaffected Power Cabinets can be moved in INDIVIDUAL BANK SELECT. However, if the cause of the alarm is a loss of current to the stationary gripper (regulation failure) then moving the bank selector switch may cause the affected group of rods to drop.

b. If the cause of the alarm is a logic failure in the Power Cabinet, then resetting the alarm from the QMCB or locally may cause ratcheting of the rods.

1. Sends an inhibit signal to the PULSER/OSCILLATOR when the affected group is selected to move.

2. Supplies holding current to the movable and stationary grippers and no current to the lift coils for the affected group.

3. Sends an inhibit signal to the group step counter for the affected group.

WINDOW B06
(Continued)

LOGIC CABINET URGENT FAILURE

NOTES

a. An Urgent Failure in the Logic Cabinet main circuits will prevent all rod motion for all of the control banks and shutdown banks A and B only. Shutdown banks C, D, and E will not be affected unless the alarm is caused by a loose or missing card in which case Shutdown banks C, D, and E will not be allowed to move either.

b. An Urgent Failure in the Shutdown Banks C, D, and E portion of the Logic Cabinet will prevent all rod motion for Shutdown banks C, D, and E only. The control banks and shutdown banks A and B will not be affected unless the alarm is cause by a loose or missing card in which case the control banks and shutdown banks a and B will not be allowed to move either.

1. Sends an inhibit signal to the PULSER/OSCILLATOR

3.0 INITIAL OPERATOR ACTIONS

If all rod motion has NOT stopped, GO to 18003-C, "Rod Control System Malfunction".

WINDOW B06
(Continued)

4.0 SUBSEQUENT OPERATOR ACTIONS

NOTES

a. The Rod Control Urgent Failure alarm seals in and must be reset using the Rod Control Alarm Reset Handswitch, 1-HS-40039, when the condition causing the alarm has cleared.

b. Use of 1-HS-40039 resets the alarm circuits, demands full latching current and resets the MASTER CYCLER.

1. STABILIZE Tavg, using turbine load and boration or dilution.

2. NOTIFY appropriate plant personnel to investigate and correct the cause of the alarm.

3. REFER to 13502-1 to reset rod control components.

5.0 COMPENSATORY OPERATOR ACTIONS

NONE

END OF SUB-PROCEDURE

REFERENCE: 1X6AT01-573, 1X6AT01-574, 1X6AT01-575, and 1X6AT01-576

36. 045K1.18 001

A secondary plant transient has occurred on Unit 1 resulting in the following plant conditions:

- Reactor and turbine power = 103%
- Both main feedwater pumps have tripped
- All steam generator levels are in the program band, but lowering rapidly
- Main feedwater flow indicators are at the bottom of the scale

Which ONE of the following correctly describes the initial automatic plant response to these conditions?

A.✓ Turbine trips immediately, which then causes the reactor to trip.

B. Turbine trips immediately and the reactor trips on Lo-Lo Steam Generator Level.

C. Turbine trips after a short time delay (less than a minute), which then causes the reactor to trip.

D. Turbine trips after a short time delay (less than a minute) and the reactor trips on Lo-Lo Steam Generator Level.

VOGTLE AMSAC VARIABLE TIMER

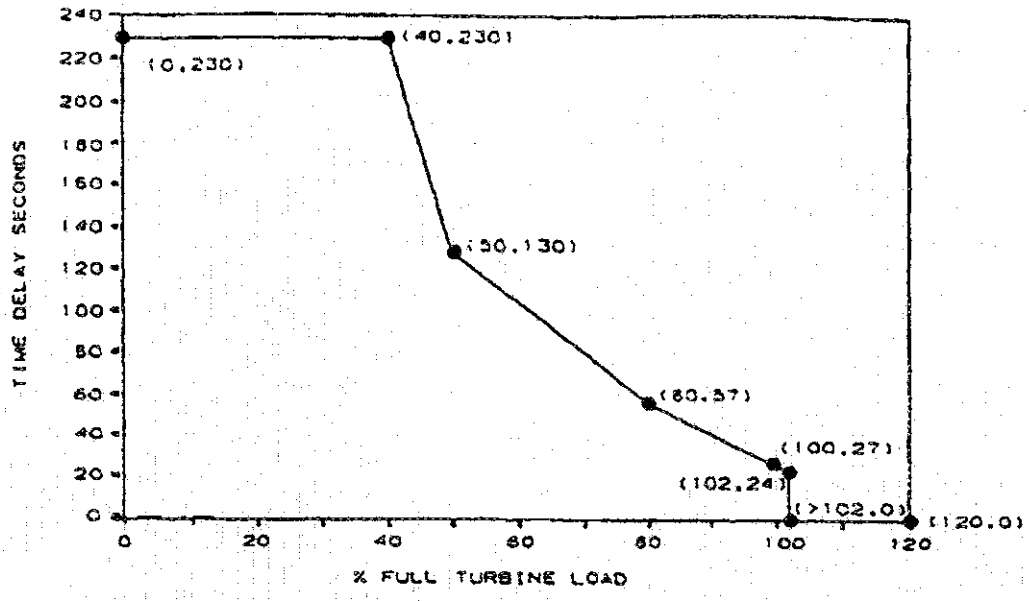

II. Control System

1. Reactor Coolant

A. Coolant average temperature (program) (TY-505A)

	Setpoint for full load+ T_{AVG} = 588.4°F	Setpoint for full load+ T_{AVG} = 570.7°F
1. High limit	588.4°F *	570.7°F *
2. Low limit	557°F	557°F
3. Full power temperature	588.4°F *	570.7°F *
4. Hot standby	557°F	557°F
5. Temperature gain	0.314°F/%power*	0.137°F/%power*
6. Lag time constant (TY-505C)	30 seconds(4)	30 seconds(4)
7. Turbine impulse pressure filter (JY-505A)	0 seconds (OFF)	0 seconds (OFF)

+ The setpoints are dependent on the actual value for the full load T_{avg}. Values are given for a full load T_{avg} of 570.7°F and 588.4°F. The actual values used should be obtained by linear interpolation using the actual T_{avg} value.

B. Coolant average temperature (auctioneered) (TY-412P, TY-412R)

1. Lead time constant (TY-412P) — 40 seconds(4)

2. Lag time constants (TY-412P, TY-412R) — 10, 14 seconds(4)

* This parameter is based on design plant conditions. This is adjusted as necessary during plant operation as described in Westinghouse startup procedures.

CONT'D ON 21

IS A RATE OF LOWERING SG LEVEL NEEDED?

K/A
045 Main Turbine Generator
K1.18 Knowledge of the physical connections and / or cause-effect relationships between the MT/G system and the following systems: RPS.

K/A MATCH ANALYSIS
The question tests the knowledge that when power > P-9, a turbine trip will cause a reactor trip. The applicant must know this in order to get the question correct, therefore, the K/A is met. Question is closed book material because it only requires the applicant to know that there is no time delay above 100% reactor power, precluding the need to pull a specific time delay number from the AMSAC Variable Timer Chart.

ANSWER / DISTRACTOR ANALYSIS
A. Correct. Above 100% power there is no time delay for AMSAC, which will cause a turbine trip when both MWF Pps trip. The reactor trip, in turn, causes a turbine trip.
B. Incorrect. The reactor will trip immediately due to the turbine trip. Plausible, because at certain power levels, the reactor will not trip on turbine trip, in which case the reactor would trip on lo-lo SG level.
C. Incorrect. Turbine trips immediately. Plausible because rx will trip on turbine trip.
D. Incorrect. Turbine trips immediately. Plausible because rx may trip on lo-lo SG level if there is a time delay on turbine trip.

REFERENCES
1. Lesson Plan, V-LO-TX-28101, RPS, SSPS, and AMSAC
2. Vogtle Requal Question RQ-SG-97200-28, LOLP28301, LO-TA-37014

MCS	Time:	1	Points:	1.00	Version:	0	1	2	3	4	5	6	7	8	9								
					Answer:	A	D	D	A	C	D	B	C	C	C							Scramble Range: A - D	

Tier:	2	Group:	2
Key Word:	REACTOR TURBINE TRIP	Cog Level:	C/A 3.6
Source:	B	Exam:	VG05301
Test:	R	Author/Reviewer:	MAB/RSB

36. 045K1.18 001

A secondary plant transient has occurred on Unit 1 resulting in the following plant conditions:

- Reactor and turbine power = 103%
- Both main feedwater pumps have tripped
- All steam generator levels are in the program band, but lowering rapidly
- Main feedwater flow indicators are at the bottom of the scale

Which ONE of the following correctly describes the initial automatic plant response to these conditions?

A. ✓ Turbine trips immediately, which then causes the reactor to trip.

B. Turbine trips immediately and the reactor trips on Lo-Lo Steam Generator Level.

C. Turbine trips after a short time delay (less than a minute), which then causes the reactor to trip.

D. Turbine trips after a short time delay (less than a minute) and the reactor trips on Lo-Lo Steam Generator Level.

IS A RATE OF LOWERING SG LEVEL NEEDED?

K/A
045 Main Turbine Generator
K1.18 Knowledge of the physical connections and / or cause-effect relationships between the MT/G system and the following systems: RPS.

K/A MATCH ANALYSIS
The question tests the knowledge that when power > P-9, a turbine trip will cause a reactor trip. The applicant must know this in order to get the question correct, therefore, the K/A is met. Question is closed book material because it only requires the applicant to know that there is no time delay above 100% reactor power, precluding the need to pull a specific time delay number from the AMSAC Variable Timer Chart.

ANSWER / DISTRACTOR ANALYSIS
A. Correct. Above 100% power there is no time delay for AMSAC, which will cause a turbine trip when both MWF Pps trip. The reactor trip, in turn, causes a turbine trip.
B. Incorrect. The reactor will trip immediately due to the turbine trip. Plausible, because at certain power levels, the reactor will not trip on turbine trip, in which case the reactor would trip on lo-lo SG level.
C. Incorrect. Turbine trips immediately. Plausible because rx will trip on turbine trip.
D. Incorrect. Turbine trips immediately. Plausible because rx may trip on lo-lo SG level if there is a time delay on turbine trip.

REFERENCES
1. Lesson Plan, V-LO-TX-28101, RPS, SSPS, and AMSAC
2. Vogtle Requal Question RQ-SG-97200-28, LOLP28301, LO-TA-37014

MCS	Time:	1	Points:	1.00	Version:	0 1 2 3 4 5 6 7 8 9	
					Answer:	A D D A C D B C C C	Scramble Range: A - D
Tier:		2			Group:	2	
Key Word:		REACTOR TURBINE TRIP			Cog Level:	C/A 3.6	
Source:		B			Exam:	VG05301	
Test:		R			Author/Reviewer:	MAB/RSB	

QUESTIONS REPORT
for Voglte 2005-301 Draft

1. 045K1.18 001

A secondary plant transient has occurred on Unit 1 resulting in the following plant conditions:

- Reactor and turbine power = 103%
- Both main feedwater pumps have tripped
- All steam generator levels are in the program band, but lowering rapidly
- Main feedwater flow indicators are at the bottom of the scale

Which ONE of the following correctly describes the initial automatic plant response to these conditions?

A. Turbine trips immediately, which then causes the reactor to trip.

B. Turbine trips immediately and the reactor trips on Lo-Lo Steam Generator Level.

C. Turbine trips after a short time delay (less than a minute), which then causes the reactor to trip.

D. Turbine trips after a short time delay (less than a minute) and the reactor trips on Lo-Lo Steam Generator Level.

I like it the way it is.

IS A RATE OF LOWERING SG LEVEL NEEDED?

K/A
045 Main Turbine Generator
K1.18 Knowledge of the physical connections and / or cause-effect relationships between the MT/G system and the following systems: RPS.

K/A MATCH ANALYSIS
The question tests the knowledge that when power > P-9, a turbine trip will cause a reactor trip. The applicant must know this in order to get the question correct, therefore, the K/A is met. Question is closed book material because it only requires the applicant to know that there is no time delay above 100% reactor power, precluding the need to pull a specific time delay number from the AMSAC Variable Timer Chart.

ANSWER / DISTRACTOR ANALYSIS
A. Correct. Above 100% power there is no time delay for AMSAC, which will cause a turbine trip when both MWF Pps trip. The reactor trip, in turn, causes a turbine trip.
B. Incorrect. The reactor will trip immediately due to the turbine trip. Plausible, because at certain power levels, the reactor will not trip on turbine trip, in which case the reactor would trip on lo-lo SG level.
C. Incorrect. Turbine trips immediately. Plausible because rx will trip on turbine trip.
D. Incorrect. Turbine trips immediately. Plausible because rx may trip on lo-lo SG level if there is a time delay on turbine trip.

REFERENCES
1. Lesson Plan, V-LO-TX-28101, RPS, SSPS, and AMSAC
2. Vogtle Requal Question RQ-SG-97200-28, LOLP28301, LO-TA-37014

MCS	Time:	1	Points:	1.00	Version:	0 1 2 3 4 5 6 7 8 9	
					Answer:	A D D A C D B C C C	Scramble Range: A - D
Tier:		2			Group:	2	
Key Word:		REACTOR TURBINE TRIP			Cog Level:	C/A 3.6	
Source:		B			Exam:	VG05301	
Test:		R			Author/Reviewer:	MAB/RSB	

28.24 System Description

The AMSAC system is a seismically qualified, digital, microprocessor-based system with the exception of its analog inputs. The RPS system uses all analog circuits and its components are provided by a different manufacture. The only thing that is common about AMSAC and the Reactor Protection System is their inputs, which are separated by isolation devices. The AMSAC system is designed to prevent a common mode failure from reducing the protection of the reactor pressure vessel. The AMSAC system is a non-safety related, non-tech spec related, and therefore non-train related system. Its single cabinet located in the control room provides reliability and redundancy by its three independent circuits called ALPs.

The **A**ctuation **L**ogic **P**rocessors (ALPs) are used in a majority voting system. The reliability of this majority voting system prevents the failure of a single circuit from causing an actuation. In addition, three-out-of-four low feed water flow coincidence logic and a time delay (that is dependent on turbine load) have been selected to further minimize the potential for inadvertent actuations.

28.25 SYSTEM OPERATION

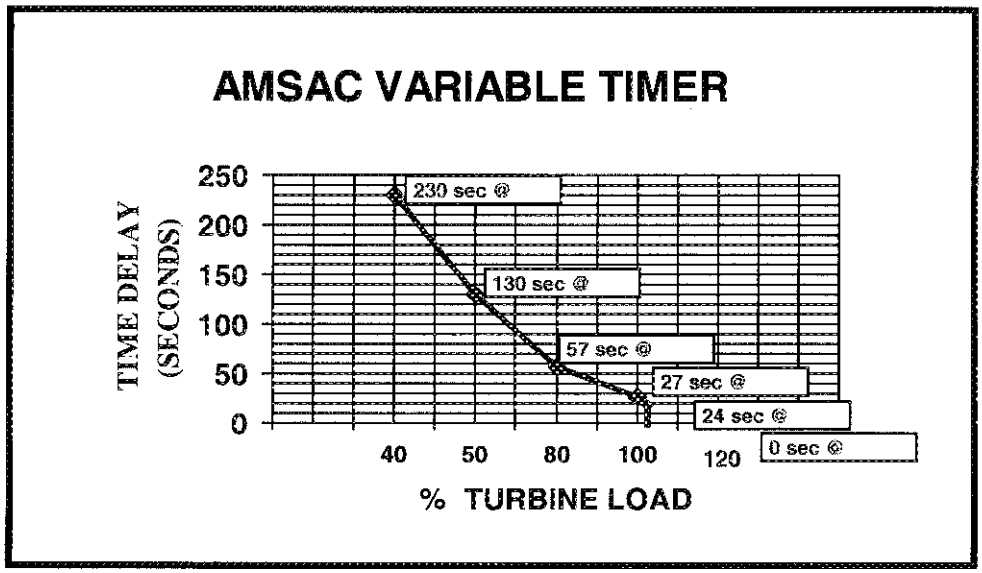

The AMSAC system is activated when Turbine Power is raised above 40% power. Inputs from PT-505 and PT-506 "Turbine Impulse Pressure" are used to determine turbine power level. Both channels must indicate ≥40% power for C-20 to be enabled. A timer set at 260 second maintains AMSAC active until timed out. The timer (TDD) starts as soon as 1 out of the 2 turbine impulse pressures drop below 40% power. After the timer times out, AMSAC is blocked.

To avoid an inadvertent actuation, another timer is used to allow the feed water system time to recover from the transient. The second timer (TDE) is variable based on auctioneered high turbine power. This timer is in line with the 3 out 4 low feed water flow logic. At higher power levels the AMSAC system is designed to respond faster than at lower power levels. The time delay allows the system time to either control or gives the reactor protection system time to respond before the AMSAC actuation occurs. At 100% power, the time delay is set at 27 seconds while at 40% power timer increases to 230 seconds. There is no time delay however, if turbine power is increased above 102% power.

Remember AMSAC is made up of three identical circuits that monitor and process the AMSAC actuation signal called an ALPs. There must be system agreement of at least 2 out of the 3 ALPs before an actuation can occur. AMSAC is generated if all the following occur:

- Main Turbine Power ≥ 40% power (C-20)
- 3 out of the 4 Low Feed water flow bi-stables trip (25% of rated feed water flow)
- TDE timer expires (based on turbine power level)
- 2 out of the 3 ALPs agree.

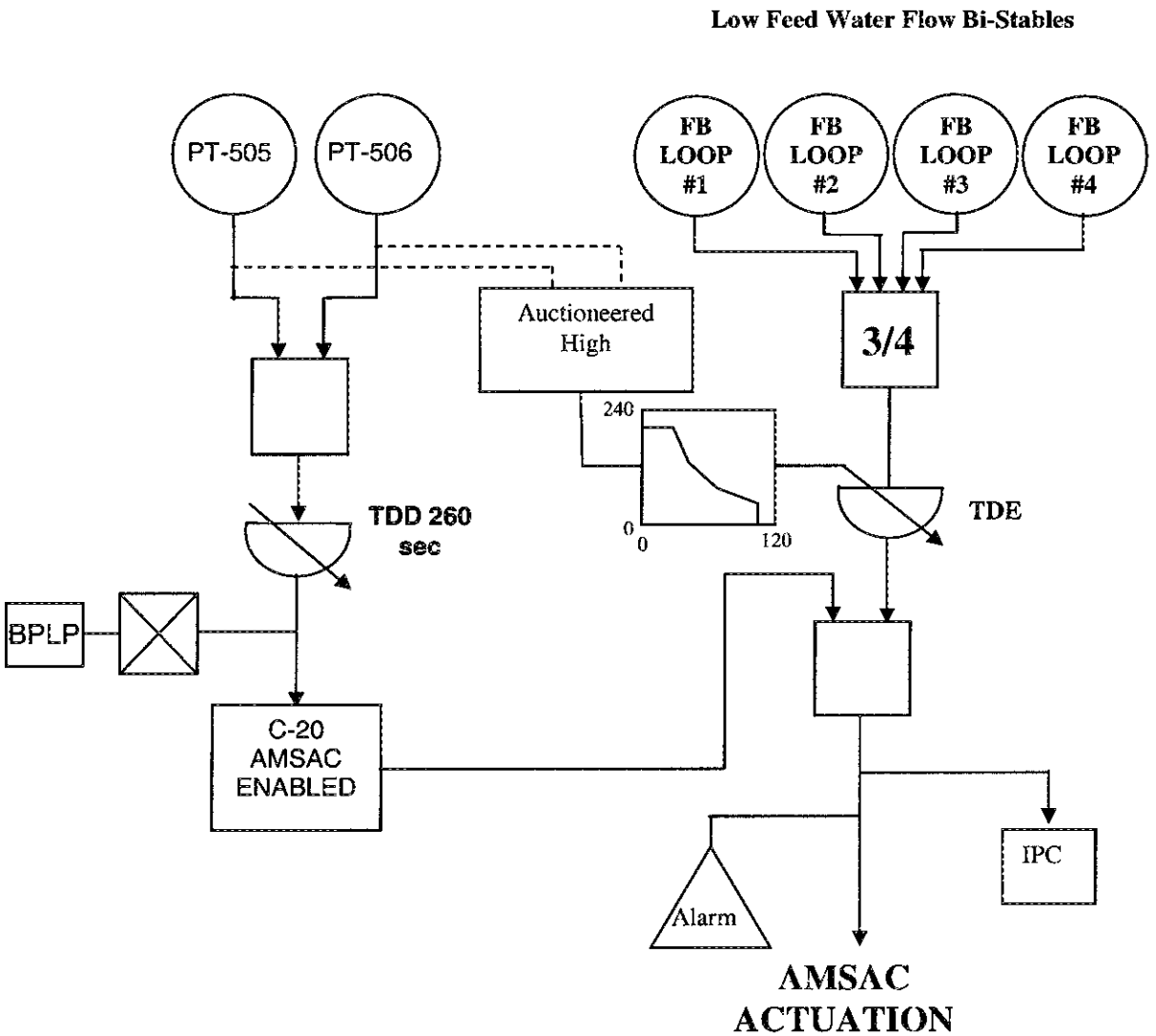

AMSAC LOGIC DIAGRAM

AMSAC actuation affects the following equipment:

- Trips the Main Turbine (Mechanical "A" train and Electrical "B" train)
- Starts both Motor Driven Aux feed water pumps
- Starts Turbine Aux feed water pump
- gives open signal for all TDAFW and MDAFW discharge throttle valves
- Isolate Steam Generator Blow Down
- Isolates Steam Generator Sample Valves

AMSAC is broken down into 2 separate trains of actuations called "Majority Voters". The two majority voting systems receive signals from all three ALPs. Once 2-out-of-3 actuation logic is counted from the ALPs, the Majority Voters energized their associated final device relays. AMSAC actuates the equipment listed above but it is broken down in the following manner:

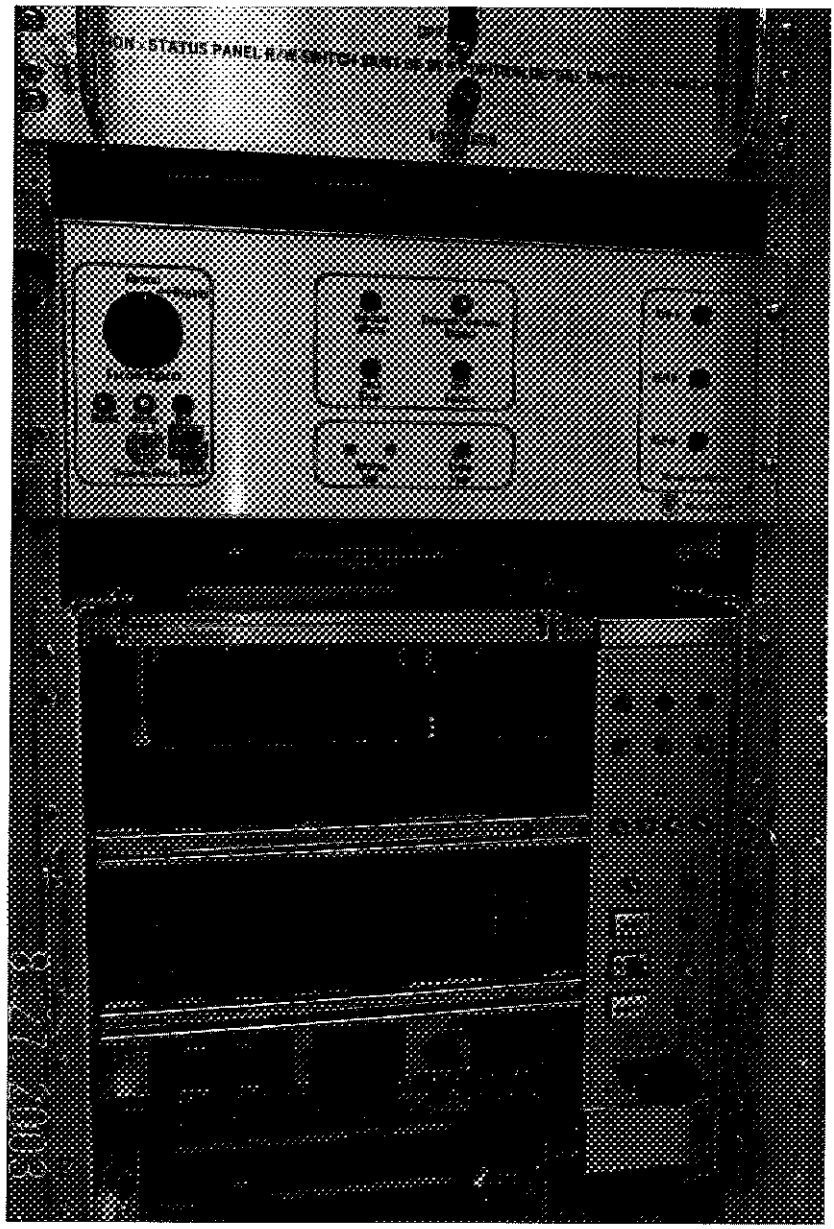

Majority Voter "A" actuates:

- Mechanical Turbine Trip
- MDAFWP Train A and its discharge valves
- TDAFWP and its discharge valves
- SGBD isolation
- Steam Generators 1&4 sample valve isolation

Majority Voter "B" actuates:

- Electrical Turbine Trip
- MDAFWP Train B and its discharge valves
- TDAFWP and its discharge valves
- SGBD isolation
- Steam Generators 2&3 sample valve isolation

Maintaining Steam Generator inventory is the bases behind the AMSAC actuation.

The AMSAC cabinet is powered from 1/2NY4N non-1E vital, which is independent from the RTS power supplies. 1/2NY4N is backed by

QUESTIONS REPORT
for LORQ Bank 1

1. RQ-SG-97200-28 003

During a secondary plant transient, an overpower condition has occurred on Unit 1. Plant conditions are as listed below:

* Reactor AND turbine power = 103%

* Both Main Feed Pumps have just tripped

* All Steam Generator levels are presently still in the program band, but are lowering rapidly

* Main Feedwater Flow indications are at bottom of scale

Which of the following statements best describes the AUTOMATIC plant response to these conditions?

A. An AMSAC actuation would immediately be generated. This signal would initiate a turbine trip, which would cause a reactor trip. All Aux Feedwater Pumps would be running.

B. The reactor trips on LO-LO SG levels, which trips the turbine. AMSAC actuates after a short time delay (less than a minute). All Aux Feedwater Pumps would be running.

C. The reactor trips on the LO-LO SG levels, which trips the turbine. AMSAC actuates after a long time delay (approx. 4 minutes). The Motor Driven Aux Feedwater Pumps start when both Main Feed Pumps trip, but the TDAFW pump will not start until AMSAC actuates.

D. An AMSAC actuation would be generated after a short time delay (less than a minute). This signal would trip the turbine, which would trip the reactor. All AFW pumps would be running.

MCS Time: 3 Points: 1.00 Version: 0 1 2 3 4 5 6 7 8 9

Answer: A A C A A C A A D B Scramble Range: A - D

Category 1: LOLP28301 Category 2: LO-TA-37014

Category 3: 000EK3.01 Category 4:

Category 5: Category 6:

Category 7: Category 8:

37. 054AK3.02 001

Unit 1 has the following indications:

- Plant is at end of life with 111 ppm boron in the RCS.
- Reactor power is at 100% Rated Thermal Power and approximately stable.
- Turbine load is 1200 MWe and approximately stable.
- Steam pressure is 970 psig and stable.
- #1 Steam Generator level is slowly trending down.
- Containment pressure is 1 psig and slowly increasing.
- Containment radiation levels are normal.
- Main Feedwater Pump discharge pressure has started to drop.

Which ONE of the following correctly completes the statement regarding the plant response and reason for the response?

The #1 main feed regulating valve will INITIALLY modulate...

A. open to try to maintain steam generator levels as main feedwater pump speed increases.

B. closed to try to maintain steam generator levels by matching feed flow with steam flow.

C. open to try to maintain steam generator levels by matching feed flow with steam flow.

D. closed to try to raise main feedwater pump discharge pressure.

This question was from the utility's bank, but ensure the utility verifies legitimacy of chosen parameters.

K/A
054 Loss of Main Feedwater
AK3.02 Knowledge of the reasons for the following responses as they apply to Loss of Main Feedwater (MFW): Matching of feedwater and steam flows.

K/A MATCH ANALYSIS
Indications are provided that are consistent with a main feedwater line break. The question tests how the MFRV responds in order to try to maintain SG level. The applicant must know why the MFRV responds as it does in order to get the correct answer. Therefore, the reason for matching feed and stm flows (to maintain SG Level) is being tested.

ANSWER / DISTRACTOR ANALYSIS
A. Incorrect. The MFRV will initially close to try to match steam flows. Plausible because SG levels are going down, which may lead applicant to thinking that the initial MFRV response would be to raise SG level by opening. The lag feature in the SG level control causes this response. The system is level-dominant, but the stm and feed flow match is quicker to respond than the level function.
B. Correct. The indications provided in the stem are consistent with a FW break in containment. The valve initially goes closed to match feed and steam flow. The break will cause indicated feed flow to go up, even though less feed will actually make it to the SG. The reason for this quick response is to maintain steam generator level, even though in this instance it actually makes the situation worse.
C. Incorrect. MFRV will initially modulate closed. Plausible because SG levels are going down and it may be a logical assumption to think the MFRV will open to try to supply more feed. Also plausible because the applicant should know that the control system is designed to try to match feed and stm flow.
D. Incorrect. MFW Pump speed is raised to maintain a dP across the MFRV, but the MFRV will respond to the feed flow / stm flow mismatch.

REFERENCES
1. Vogtle Bank Question LO-LP-60308-05-01.
2. V-LO-TX-21101, Main Steam System, Rev. 4.0.
3. Simulator Malfunction FW06.
4. V-LO-TX-18101, Condensate and Feedwater Text Part 1, Rev. 4.0.
5. V-LO-TX-18201, Condensate and Feedwater Text Part 2, Rev. 2.0.

MCS	Time:	1	Points:	1.00	Version:	0	1	2	3	4	5	6	7	8	9								
					Answer:	B	C	D	C	C	A	A	B	B	C							Scramble Range: A - D	

Tier:	1	Group:	1
Key Word:	MAIN FEEDLINE BREAK	Cog Level:	C/A 3.4
Source:	M	Exam:	VG05301
Test:	R	Author/Reviewer:	MAB/RSB

37. 054AK3.02 001

Unit 1 has the following indications:

- Plant is at end of life with 111 ppm boron in the RCS.
- Reactor power is at 100% Rated Thermal Power and approximately stable.
- Turbine load is 1200 MWe and approximately stable.
- Steam pressure is 970 psig and stable.
- #1 Steam Generator level is slowly trending down.
- Containment pressure is 1 psig and slowly increasing.
- Containment radiation levels are normal.
- Main Feedwater Pump discharge pressure has started to drop.

Which ONE of the following correctly completes the statement regarding the plant response and reason for the response?

The #1 main feed regulating valve will INITIALLY modulate...

A. open to try to maintain steam generator levels as main feedwater pump speed increases.

B. ✔ closed to try to maintain steam generator levels by matching feed flow with steam flow.

C. open to try to maintain steam generator levels by matching feed flow with steam flow.

D. closed to try to raise main feedwater pump discharge pressure.

This question was from the utility's bank, but ensure the utility verifies legitimacy of chosen parameters.

K/A
054 Loss of Main Feedwater
AK3.02 Knowledge of the reasons for the following responses as they apply to Loss of Main Feedwater (MFW): Matching of feedwater and steam flows.

K/A MATCH ANALYSIS
Indications are provided that are consistent with a main feedwater line break. The question tests how the MFRV responds in order to try to maintain SG level. The applicant must know why the MFRV responds as it does in order to get the correct answer. Therefore, the reason for matching feed and stm flows (to maintain SG Level) is being tested.

ANSWER / DISTRACTOR ANALYSIS
A. Incorrect. The MFRV will initially close to try to match steam flows. Plausible because SG levels are going down, which may lead applicant to thinking that the initial MFRV response would be to raise SG level by opening. The lag feature in the SG level control causes this response. The system is level-dominant, but the stm and feed flow match is quicker to respond than the level function.
B. Correct. The indications provided in the stem are consistent with a FW break in containment. The valve initially goes closed to match feed and steam flow. The break will cause indicated feed flow to go up, even though less feed will actually make it to the SG. The reason for this quick response is to maintain steam generator level, even though in this instance it actually makes the situation worse.
C. Incorrect. MFRV will initially modulate closed. Plausible because SG levels are going down and it may be a logical assumption to think the MFRV will open to try to supply more feed. Also plausible because the applicant should know that the control system is designed to try to match feed and stm flow.
D. Incorrect. MFW Pump speed is raised to maintain a dP across the MFRV, but the MFRV will respond to the feed flow / stm flow mismatch.

REFERENCES
1. Vogtle Bank Question LO-LP-60308-05-01.
2. V-LO-TX-21101, Main Steam System, Rev. 4.0.
3. Simulator Malfunction FW06.
4. V-LO-TX-18101, Condensate and Feedwater Text Part 1, Rev. 4.0.
5. V-LO-TX-18201, Condensate and Feedwater Text Part 2, Rev. 2.0.

MCS	Time:	1	Points:	1.00	Version:	0 1 2 3 4 5 6 7 8 9	
					Answer:	B C D C C A A B B C	Scramble Range: A - D

Tier:	1	Group:	1
Key Word:	MAIN FEEDLINE BREAK	Cog Level:	C/A 3.4
Source:	M	Exam:	VG05301
Test:	R	Author/Reviewer:	MAB/RSB

1. 054AK3.02 001

Unit 1 has the following indications:

- Plant is at end of life with 111 ppm boron in the RCS.
- Reactor power is at 100% Rated Thermal Power and approximately stable.
- Turbine load is 1200 MWe and approximately stable.
- Steam pressure is 970 psig and stable.
- #1 Steam Generator level is slowly trending down.
- Containment pressure is 1 psig and slowly increasing.
- Containment radiation levels are normal.
- Main Feedwater Pump discharge pressure has started to drop.

Which ONE of the following correctly completes the statement regarding the plant response and reason for the response?

The #1 main feed regulating valve will INITIALLY modulate...

A. open to try to maintain steam generator levels as main feedwater pump speed increases.

B. closed to try to maintain steam generator levels by matching feed flow with steam flow.

C. open to try to maintain steam generator levels by matching feed flow with steam flow.

D. closed to try to raise main feedwater pump discharge pressure.

This question was from the utility's bank, but ensure the utility verifies legitimacy of chosen parameters.

K/A
054 Loss of Main Feedwater
AK3.02 Knowledge of the reasons for the following responses as they apply to Loss of Main Feedwater (MFW): Matching of feedwater and steam flows.

K/A MATCH ANALYSIS
Indications are provided that are consistent with a main feedwater line break. The question tests how the MFRV responds in order to try to maintain SG level. The applicant must know why the MFRV responds as it does in order to get the correct answer. Therefore, the reason for matching feed and stm flows (to maintain SG Level) is being tested.

ANSWER / DISTRACTOR ANALYSIS
A. Incorrect. The MFRV will initially close to try to match steam flows. Plausible because SG levels are going down, which may lead applicant to thinking that the initial MFRV response would be to raise SG level by opening. The lag feature in the SG level control causes this response. The system is level-dominant, but the stm and feed flow match is quicker to respond than the level function.
B. Correct. The indications provided in the stem are consistent with a FW break in containment. The valve initially goes closed to match feed and steam flow. The break will cause indicated feed flow to go up, even though less feed will actually make it to the SG. The reason for this quick response is to maintain steam generator level, even though in this instance it actually makes the situation worse.
C. Incorrect. MFRV will initially modulate closed. Plausible because SG levels are going down and it may be a logical assumption to think the MFRV will open to try to supply more feed. Also plausible because the applicant should know that the control system is designed to try to match feed and stm flow.
D. Incorrect. MFW Pump speed is raised to maintain a dP across the MFRV, but the MFRV will respond to the feed flow / stm flow mismatch.

REFERENCES
1. Vogtle Bank Question LO-LP-60308-05-01.
2. V-LO-TX-21101, Main Steam System, Rev. 4.0.
3. Simulator Malfunction FW06.
4. V-LO-TX-18101, Condensate and Feedwater Text Part 1, Rev. 4.0.
5. V-LO-TX-18201, Condensate and Feedwater Text Part 2, Rev. 2.0.

MCS	Time:	1	Points:	1.00	Version:	0 1 2 3 4 5 6 7 8 9	
					Answer:	B C D C C A A B B C	Scramble Range: A - D

Tier:	1	Group:	1
Key Word:	MAIN FEEDLINE BREAK	Cog Level:	C/A 3.4
Source:	M	Exam:	VG05301
Test:	R	Author/Reviewer:	MAB/RSB

QUESTIONS REPORT
for Voglte 2005-301 Draft

1. 054AK3.02 001

Unit 1 has the following indications:

- Plant is at end of life with 111 ppm boron in the RCS.
- Reactor power is at 100% Rated Thermal Power and approximately stable.
- Turbine load is 1050 MWe and approximately stable. 1200 MWe
- Steam pressure is 970 psig and stable.
- #1 Steam Generator level is slowly trending down.
- Containment pressure is 1 psig and slowly increasing.
- Containment radiation levels are normal.
- Main Feedwater Pump discharge pressure has started to drop.

Which ONE of the following correctly completes the statement regarding the plant response and reason for the response?

The #1 main feed regulating valve will initially ... modulate

A. modulate open to try to maintain steam generator levels.

B. modulate closed to try to maintain steam generator levels.

C. modulate open to match feed flow with steam flow.

D. closed to try to maintain main feedwater pump discharge pressure.

B, modulate closed to try to maintain feed flow & steam flow,

This question was from the utility's bank, but ensure the utility verifies legitimacy of chosen parameters.

K/A
054 Loss of Main Feedwater
AK3.02 Knowledge of the reasons for the following responses as they apply to Loss of Main Feedwater (MFW): Matching of feedwater and steam flows.

K/A MATCH ANALYSIS
Indications are provided that are consistent with a main feedwater line break. The question tests how the MFRV responds in order to try to maintain SG level. The applicant must know why the MFRV responds as it does in order to get the correct answer. Therefore, the reason for matching feed and stm flows (to maintain SG Level) is being tested.

ANSWER / DISTRACTOR ANALYSIS
A. Incorrect. The MFRV will initially close to try to match steam flows. Plausible because SG levels are going down, which may lead applicant to thinking that the initial MFRV response would be to raise SG level by opening. The lag feature in the SG level control causes this response. The system is level-dominant, but the stm and feed flow match is quicker to respond than the level function.
B. Correct. The indications provided in the stem are consistent with a FW break in containment. The valve initially goes closed to match feed and steam flow. The break will cause indicated feed flow to go up, even though less feed will actually make it to the SG. The reason for this quick response is to maintain steam generator level, even though in this instance it actually makes the situation worse.
C. Incorrect. MFRV will initially modulate closed. Plausible because SG levels are going down and it may be a logical assumption to think the MFRV will open to try to supply more feed. Also plausible because the applicant should know that the control system is designed to try to match feed and stm flow.
D. Incorrect. MFW Pump speed is raised to maintain a dP across the MFRV, but the MFRV will respond to the feed flow / stm flow mismatch.

REFERENCES
1. Vogtle Bank Question LO-LP-60308-05-01.
2. V-LO-TX-21101, Main Steam System, Rev. 4.0.
3. Simulator Malfunction FW06.
4. V-LO-TX-18101, Condensate and Feedwater Text Part 1, Rev. 4.0.
5. V-LO-TX-18201, Condensate and Feedwater Text Part 2, Rev. 2.0.

MCS Time: 1 Points: 1.00 Version: 0 1 2 3 4 5 6 7 8 9
Answer: B C D C C A A B B C Scramble Range: A - D

Tier:	1	Group:	1
Key Word:	MAIN FEEDLINE BREAK	Cog Level:	C/A 3.4
Source:	M	Exam:	VG05301
Test:	R	Author/Reviewer:	MAB/RSB

- Total steam flow: (selected channel)

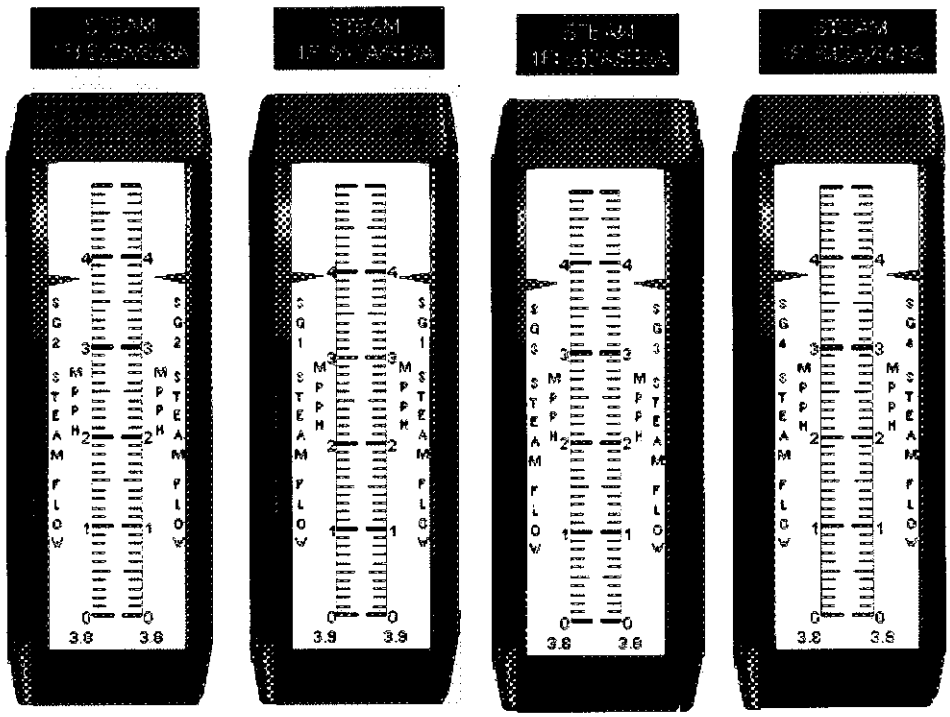

The steam flow to the main feedwater pump is controlled by an assembly of high and low-pressure steam flow control valves. These valves are positioned by the Main Feedwater Pump's electro-hydraulic oil on signals from the three-element controller. The speed control signal is generated by comparing the steam header pressure (PT-507) to the Feed Water header pressure (PT-508) and getting an actual ΔP signal. This actual ΔP signal is compared to a programmed setpoint determined by the total steam flow signal, generating a speed demand signal in the Master Speed Controller. The speed demand signal is routed to the individual Main Feed Water Pump Westinghouse Controllers which in turn generates speed control signals to adjust the Main Feed Water Pump speed.

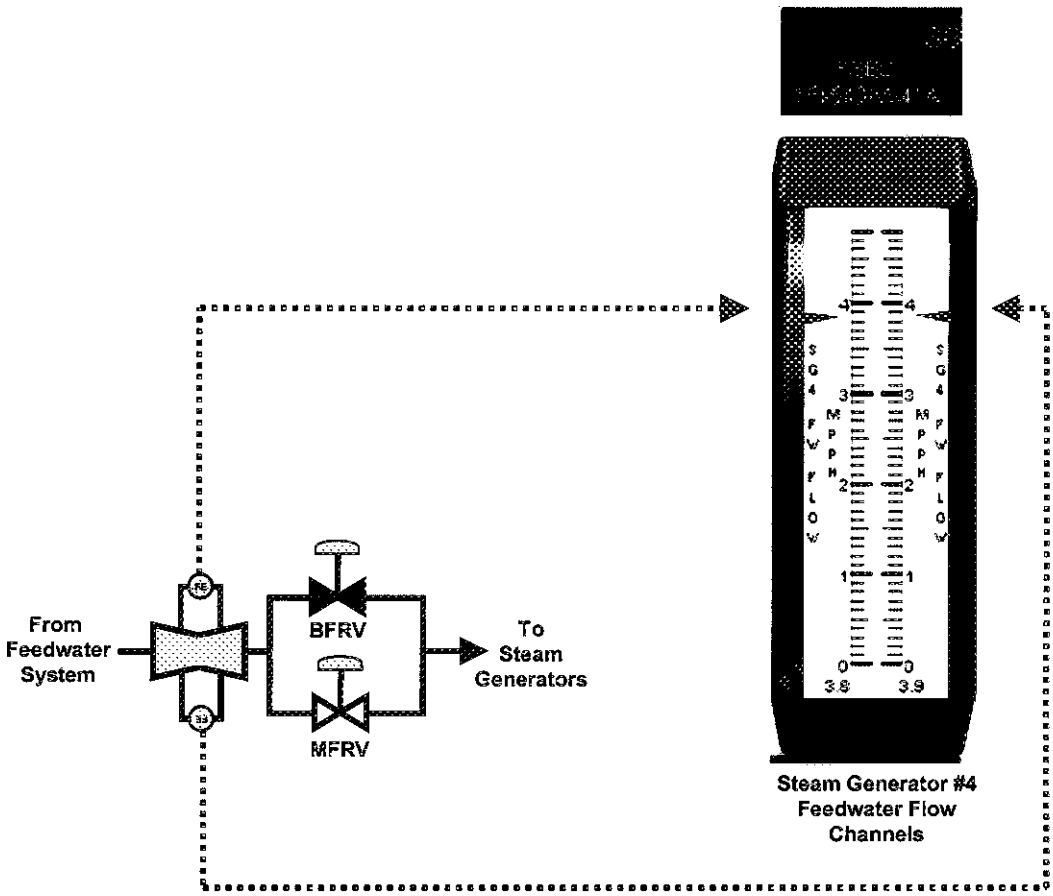

The reason that steam flow & feed flow inputs are used is an anticipating circuit to allow the Steam Generator Level Control System to respond quickly during a transient. In other words if your feeding a Steam Generator more Water than is being removed by steaming level will increase.

Three controlling elements of the Steam Generator Level Control make up this system:

- Actual Steam Generator Level (first to be discussed)
- Steam Flow & Feed Water Flow
- **Desired Steam Generator Level (better known as programmed Level)**

The last input into the three-element control loop for Steam Generator Level control is programmed level. This input is just a **"HARD"** setpoint, which is set at each of the control loop cards to 65% narrow range. There is a Main Control Room Meter, which always reads the setpoint of 65% but in reality has been removed from all controlling functions and serves no purpose.

LO-LP-60308-05-01
Unit 1 is operating at power when the following indications are reported:

* Operating history is EOL 111 ppm
* Reactor power is 100% and slowly DECREASING
* Auct High Tavg is 576 F and slowly INCREASING
* RCS pressure is 2210 psig and slowly INCREASING
* Turbine load is 1050 MWs and STABLE
* Steam Pressure is 970 psig and slowly INCREASING
* Containment Pressure is 1 psig and slowly INCREASING
* Containment radiation levels normal

Steam Gen #1 Pressure is 150 %

Which ONE of the following would cause the above indications to occur?

change order of answers.

A. Feedline break inside Containment

B. RCS leak inside Containment

C. ~~Ejected control rod~~

D. Steamline break inside Containment

LO-LP-60308-05
Describe the basic response of the following to the three classes of secondary coolant accidents (small, intermediate, and large).

a. Control rods
b. Feedwater
c. Turbine Load

LO-LP-60308-04 01 is a question similar to this except it gives indications of a MSLB (Stm P ↘).

Summary of 100% Reactor Power Plant Conditions:

Under 100% power normal operating conditions you would expect to see the following equipment status:

- All Train "A" & "B" Main Steam Isolation Valves **OPEN** (8 total valves)
- All Train "A" & "B" Main Steam Isolation Bypass Valves **OPEN** (8 total valves)
- All Main Steam Isolation Bypass Control Valves **OPEN** (4 total valves)
- Atmospheric Relief Valves **CLOSED** in automatic control

The 100% power normal operating conditions you would expect to see the following process conditions:

Parameter	**Value / Position**
SG NR level	65%
SG steam flow rate	4×10^6 lbm/hr
SG Steam pressure	960 psig
Atmospheric Relief Valve Pot Setpoint	7.47 lift at 1120.5 psig
Main Steam Code Safety Valves Lift Setpoints	1185 psig 1200 psig 1210 psig 1220 psig 1235 psig
Main Steam System supplying Steam to the following loads	1. High Pressure Turbine 2. Moisture Separator Reheaters (4 total) 3. Steam Jet Air Ejector (1)

The following automatic control systems associated with the Main Steam System would normally be in service at 100% power:

- Steam Generator water level control
- Main Feed Water Pump Control

Main Steam Header Pressure Indication

Steam header pressure is monitored between each steam generator and its main steam isolation valve by three pressure transmitters. These pressure transmitters send signals used for:

(1) pressure indication at the main control room panel
(2) pressure indication at the remote shutdown panel
(3) pressure alarms on the main control panel
(4) computer inputs
(5) pressure recording on the main control room panel
(6) high steam pressure rate alarms on main control board.

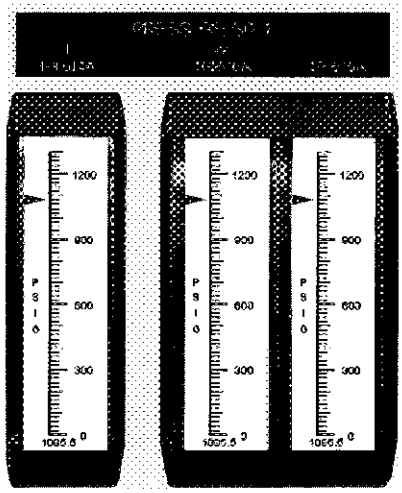

Reactor Protection:

In the event of the following accidents, "Safety Injection" and "Main Steamline Isolation" signal are processed by the Reactor Protection System.

1. Steam Line Break
2. Feedwater Line Break
3. Inadvertent opening of an Atmospheric Relief Valve or Main Steamline Safety Valve

The Main Steamline Pressure instruments are used to provide this protection. Normally at power the Main Steamline Pressure instruments will indicate a pressure of approximately 950 psig (100% Reactor Power values). In the events of the accidents describe above you would expect the pressure to lower in the Main Steamlines. If conditions were allowed to continue the safety of the Reactor would be in question. To minimize the consequences of these accidents on decreasing Main Steamline pressure "2/3 Main Steamline pressure instruments on 1/4 Main Steamlines at 585 psig" a Main Steam Isolation and Safety Injection signal is processed to insure the Reactor Core is protected against loss of inventory and the positive reactivity insertion due to the primary cooldown.

As you know when the plant is shutdown and cooled down during outages the plant does not normally experience a Safety Injection and Main Steamline Isolation (if we did we would not operate very long). To allow for unit shutdowns the plant is designed to allow the operators to remove the Low Steamline Pressure actuation signal function from service using Unit Operating Procedures for guidance. So, during a controlled unit cooldown as Pressurizer Pressure lowers below 2000 psig (P-11) the control room operators will manually block the Safety Injection/Main Steamline

INSTRUCTOR STATION NO: FW06

I RIPTION: **Feedwater Line Rupture Inside Containment**

Variable: 100% = 9,460,00 lbm/hr (25,000 gpm)

FW06a - FWL1 FW06c - FWL3
FW06c - FWL2 FW06d - FWL4

SOFTWARE NAME(s):	Logicals	Severitys
FWL 1:	JMLCFW1(1)	SMLCFW1(1)
FWL 2:	JMLCFW1(2)	SMLCFW1(2)
FWL 3:	JMLCFW1(3)	SMLCFW1(3)
FWL 4:	JMLCFW1(4)	SMLCFW1(4)

CAUSE: Pipe break between S/G and temp element TE-15205

PLANT STATUS: 100% power

EFFECTS:

Use the following chart to insert the malfunction:

S RITY	FLOW TO CTMT FROM SG	FLOW TO CTMT FROM FEED LINE	FEED FLOW TO AFFECTED SG
100%	5.76E6 lbm/hr	all FW	0 lbm/hr
80%	4.5E6	all FW	0
60%	3.4E6	2.3E6 lbm/hr	1.6E6
50%	2.8E6	1.9E6	1.9E6
40%	0	1.5E6	2.3E6
20%	0	7.6E5	3E6
10%	0	3.8E5	3.44E6
0%	0	0	all FW **********

At 100% power, the malfunction can be inserted at 21% severity and still maintain the plant on line. This is with the FRV 100% open, three condensate pumps, and the SGFPT's in manual at maximum speed.

Indicated feed flow to the steam generator increases. A feedwater line r ure causes a reduction in feed flow to the affected steam generator. This

reduced feed flow causes the affected steam generator level to decrease. The steam generator level control system responds to maintain level. With maximum s rity inserted, the affected steam generator blowsdown rapidly and causes a reactor trip/turbine trip.

The reduced feedwater flow causes a decrease in subcooling of the affected steam generator. This causes an increase in Tavg. Pressurizer level and pressure correspondingly increase. The pressurizer pressure and level control systems respond to this transient.

Once a reactor trip occurs, the affected steam generator and the other steam generators continue to blowdown through the rupture. This leads to a low steamline pressure condition and initiates safety injection steamline and feedwater isolation.

When the SLI & FWI isolations occur, blowdown of the unaffected steam generators stops. The affected loop boils dry due to the location of the rupture. Auxiliary feedwater restores level in the unaffected loops.

Containment pressure and humidity ncrease dependent on break size. The sump levels increase, initiating sump pump starts.

Malfunction removal will stop the leak.

38. 055EK1.02 001

The crew is performing 19101-C, ECA-0.1 Loss of All AC Power Recovery Without SI Required, and are attempting to verify natural circulation with the following conditions:

- Offsite power is not available
- Both emergency diesel generators are supplying their loads
- RCS subcooling is 22 ^{o}F
- Steam generator levels and pressures are stable
- Core exit thermocouples are stable
- RCS WR cold legs are at saturation temperatures for the steam generator pressures

Which ONE of the following describes the correct operator actions based on the above conditions?

A. Open the steam dumps to lower steam generator pressures and cool the RCS.

B. ✓ Open the steam generator ARVs to lower steam generator pressures and cool the RCS.

C. Throttle closed the steam dumps to maintain the same steam generator pressures and conserve secondary inventory.

D. Throttle closed ARVs to maintain the same steam generator pressures and conserve secondary inventory.

K/A
055 Station Blackout
EK1.02 Knowledge of the operational implications of the following concepts as they apply to the Station Blackout: Natural Circulation Cooling.

K/A MATCH ANALYSIS
The question tests knowledge of NC verification criteria and actions to take when parameters are not reading values that indicate NC has been established. The implications of not yet having NC are to steam the SGs to induce NC. Therefore, the question is matching the K/A testing operational implications (operator actions) of not having NC following a SBO.

ANSWER / DISTRACTOR ANALYSIS
A. Incorrect. Condenser is not available due to SBO. Plausible because dumping steam is the correct course of action.
B. Correct. Step 13 of 19101-C. ARVs must be used because condenser is not available.
C. Incorrect. Condenser is not available and procedure gives direction to dump steam at a higher rate if NC is not established. Plausible because the ability to maintain inventory is a concern with no power to transfer water to CST.
D. Incorrect. Procedure gives direction to dump steam at a higher rate if NC is not established. Plausible because the ability to maintain inventory is a concern with no power to transfer water to CST.

REFERENCES
1. 19101-C, ECA-0.1 Loss of All AC Power Recovery Without SI Required, Rev. 20.1, 08/22/2003.

| | | |

38. 055EK1.02 001

The crew is performing 19101-C, ECA-0.1 Loss of All AC Power Recovery Without SI Required. The following conditions exist:

- Offsite power is not available — Both EDGs are supplying their loads.
- RCS subcooling is 22 °F
- Steam generator levels and pressures are stable
- Core exit thermocouples are stable
- RCS WR cold legs are at saturation temperatures for the steam generator pressures

Which ONE of the following describes the correct operator actions based on the above conditions?

A. Open the steam dumps to lower steam generator pressures and cool the RCS.

B. ✓ Open the steam generator ARVs to lower steam generator pressures and cool the RCS.

C. Throttle closed the steam dumps to maintain the same steam generator pressures and conserve secondary inventory.

D. Throttle closed ARVs to maintain the same steam generator pressures and conserve secondary inventory.

K/A
055 Station Blackout
EK1.02 Knowledge of the operational implications of the following concepts as they apply to the Station Blackout: Natural Circulation Cooling.

K/A MATCH ANALYSIS
The question tests knowledge of NC verification criteria and actions to take when parameters are not reading values that indicate NC has been established. The implications of not yet having NC are to steam the SGs to induce NC. Therefore, the question is matching the K/A testing operational implications (operator actions) of not having NC following a SBO.

ANSWER / DISTRACTOR ANALYSIS
A. Incorrect. Condenser is not available due to SBO. Plausible because dumping steam is the correct course of action.
B. Correct. Step 13 of 19101-C. ARVs must be used because condenser is not available.
C. Incorrect. Condenser is not available and procedure gives direction to dump steam at a higher rate if NC is not established. Plausible because the ability to maintain inventory is a concern with no power to transfer water to CST.
D. Incorrect. Procedure gives direction to dump steam at a higher rate if NC is not established. Plausible because the ability to maintain inventory is a concern with no power to transfer water to CST.

REFERENCES
1. 19101-C, ECA-0.1 Loss of All AC Power Recovery Without SI Required, Rev. 20.1, 08/22/2003.

| | | |

2. 055EK1.02 001

reword.

The following conditions exist when operators are attempting to verify natural circulation while performing 19101-C, ECA-0.1 Loss of All AC Power Recovery Without SI Required:

- ~~No~~ offsite power is not available
- RCS subcooling is 22 °F
- Steam generator levels and pressures are stable
- Core exit thermocouples are stable
- RCS WR cold legs are at saturation temperatures for the steam generator pressures

Which ONE of the following describes the correct operator actions based on the above conditions?

A. Open the steam dumps to lower steam generator pressures and cool the RCS.

B. Open the steam generator ARVs to lower steam generator pressures and cool the RCS.

C. Throttle closed the steam dumps to maintain the same steam generator pressures and conserve secondary inventory.

D. Throttle closed ARVs to maintain the same steam generator pressures and conserve secondary inventory.

K/A
055 Station Blackout
EK1.02 Knowledge of the operational implications of the following concepts as they apply to the Station Blackout: Natural Circulation Cooling.

K/A MATCH ANALYSIS
The question tests knowledge of NC verification criteria and actions to take when parameters are not reading values that indicate NC has been established. The implications of not yet having NC are to steam the SGs to induce NC. Therefore, the question is matching the K/A testing operational implications (operator actions) of not having NC following a SBO.

ANSWER / DISTRACTOR ANALYSIS
A. Incorrect. Condenser is not available due to SBO. Plausible because dumping steam is the correct course of action.
B. Correct. Step 13 of 19101-C. ARVs must be used because condenser is not available.
C. Incorrect. Condenser is not available and procedure gives direction to dump steam at a higher rate if NC is not established. Plausible because the ability to maintain inventory is a concern with no power to transfer water to CST.
D. Incorrect. Procedure gives direction to dump steam at a higher rate if NC is not established. Plausible because the ability to maintain inventory is a concern with no power to transfer water to CST.

REFERENCES
1. 19101-C, ECA-0.1 Loss of All AC Power Recovery Without SI Required, Rev. 20.1, 08/22/2003.

MCS	Time:	1	Points:	1.00	Version:	0 1 2 3 4 5 6 7 8 9	
					Answer:	B C D A C D A B B D	Scramble Range: A - D
Tier:		1			Group:	1	
Key Word:		NC NATURAL CIRCULATI			Cog Level:	C/A 4.1	
Source:		N			Exam:	VG05301	
Test:		R			Author/Reviewer:	MAB/RSB	

My copy from working @ home.

055EK1.02

Knowledge of operational implications of NC cooling.

The following conditions exists when operators are verifying natural circulation during a Station Blackout:

- RCS subcooling is 22 F.
- Steam Generator Levels and Pressures are stable.
- CETs are stable
- RCS Cold Legs are at saturation temperatures for the steam generator pressures

Which ONE of the following describes the correct operator actions?

A. Open the steam dumps to lower steam generator pressures and cool the RCS.
B. Open the steam generator ARVs to lower steam generator pressures and cool the RCS.
C. Throttle the steam dumps to maintain the same steam generator pressures and conserve secondary inventory.
D. Throttle ARVs to maintain the same steam generator pressures and conserve secondary inventory.

Distractor Analysis

A. Condenser not available. Plausible because this would be the first option if the condenser was available.
B. See 19101-C. NC criteria not met due to subcooling.
C. Condenser not available. Plausible because inventory is a concern with no ability to transfer water to makeup for losses out the ARVs.
D. 19101-C states to dump steam since subcooling criteria is not met.

ACTION/EXPECTED RESPONSE	RESPONSE NOT OBTAINED
*12. Establish PRZR pressure control:	
a. Check letdown - IN SERVICE.	a. Use PRZR heaters and one PRZR PORV to maintain RCS pressure. Go to Step 13.
b. Use PRZR heaters and auxiliary spray to maintain RCS pressure.	
13. Verify natural circulation: • RCS subcooling - GREATER THAN 24°F. • SG pressures - STABLE OR LOWERING. • RCS WR hot leg temperatures - STABLE OR LOWERING. • Core exit TCs - STABLE OR LOWERING. • RCS WR cold leg temperatures - AT SATURATION TEMPERATURE FOR SG PRESSURE.	13. Raise rate of dumping steam from intact SG(s).
*14. Check SR indication:	
a. Check IR flux - LESS THAN $7E^{-4}$%.	a. <u>WHEN</u> IR flux less than $7E^{-4}$%, <u>THEN</u> perform Steps 14b and c. Continue with Step 15.
b. Check SR - INDICATING CORRECTLY	
c. Switch nuclear recorder NR-45 to SR scale.	

39. 056AK3.02 001

During performance of 19100, ECA-0.0 Loss of All AC Power, operators encounter steps that have them open several electrical equipment room doors within 30 minutes of losing AC power (Step 15) and to depressurize the steam generators to 300 psig, but not less than 200 psig (Step 18).

Which ONE of the following correctly states the reasons (basis) for these two steps?

A. If electrical equipment room doors are not opened within the time limit (30 minutes) a loss of control power could occur AND the steam generators must not be depressurized to less than 200 psig to prevent a steam bubble in the reactor vessel head.

B. ✓ If electrical equipment room doors are not opened within the time limit (30 minutes) a loss of control power could occur AND the steam generators must not be depressurized to less than 200 psig to prevent injecting nitrogen from the accumulators.

C. If electrical equipment room doors are not opened within the time limit (30 minutes) permanent damage to the station batteries due to reverse polarity may occur AND the steam generators must not be depressurized to less than 200 psig to prevent a steam bubble in the reactor vessel head.

D. If electrical equipment room doors are not opened within the time limit (30 minutes) permanent damage to the station batteries due to reverse polarity may occur AND the steam generators must not be depressurized to less than 200 psig to prevent injecting nitrogen from the accumulators.

K/A
056 Loss of Off-site Power
AK3.02 Knowledge of the reasons for the following responses as they apply to the Loss of Offsite Power: Actions contained in EOP for loss of offsite power.

K/A MATCH ANALYSIS
The question tests the reasons behind Steps 15 and 18 of ECA-0.0, which are actions that must be taken when a loss of all AC occurs. A loss of all AC includes a loss of Offsite Power, along with EDGs failing to energize their respective safety buses; therefore, the K/A is met. This information, although it is basis-type information, is contained in caution statements and is appropriate for ROs to know.

ANSWER / DISTRACTOR ANALYSIS
A. Incorrect. Void creation is also incorrect. Plausible because in a quick cooldown situation, the reactor head will remain hot and create the potential for voids to form. This is not an issue even if voids do form, thus the reason is incorrect, but plausible.
B. Correct. See caution statements prior to Steps 15 and 18 in 19100, ECA-0.0, and LP Page 7 and 9.
C. Incorrect. Reverse polarity concerns are dealt with in Step 16, which provides guidance to open the battery breaker when voltage reaches < 105V dc. Plausible because reasons detailed in "A" regarding steam bubble formation. Also plausible because reverse polarity is an actual basis for a subsequent step.
D. Incorrect. Reverse polarity concerns are dealt with in Step 16, which provides guidance to open the battery breaker when voltage reaches < 105V dc. Plausible because nitrogen injection is the actual concern with depressing. Also plausible because reverse polarity is an actual basis for a subsequent step.

REFERENCES
1. 19100, ECA-0.0 Loss of All AC, Rev. 28, 12/19/2003.
2. LO-LP-37031-15-C, Loss of All AC Power, Rev. 15, 12/14/2000.

MCS	Time:	1	Points:	1.00	Version:	0 1 2 3 4 5 6 7 8 9	
					Answer:	B C A B B D A D B B	Scramble Range: A - D
Tier:		1			Group:	1	
Key Word:		LOSS OF ALL AC			Cog Level:	MEM 4.4	
Source:		N			Exam:	VG05301	
Test:		R			Author/Reviewer:	MAB/RSB	

1. 056AK3.02 001

During performance of 19100, ECA-0.0 Loss of All AC Power, operators encounter steps that have them open several electrical equipment room doors within 30 minutes of losing AC power (Step 15) and to depressurize the steam generators to 300 psig, but not less than 200 psig (Step 18).

Which ONE of the following correctly states the reasons (basis) for these two steps?

A. If electrical equipment room doors are not opened within the time limit (30 minutes) a loss of control power could occur AND the steam generators must not be depressurized to less than 200 psig to prevent a steam bubble in the reactor vessel head.

B. If electrical equipment room doors are not opened within the time limit (30 minutes) a loss of control power could occur AND the steam generators must not be depressurized to less than 200 psig to prevent injecting nitrogen from the accumulators.

C. If electrical equipment room doors are not opened within the time limit (30 minutes) permanent damage to the station batteries due to reverse polarity may occur AND the steam generators must not be depressurized to less than 200 psig to prevent a steam bubble in the reactor vessel head.

D. If electrical equipment room doors are not opened within the time limit (30 minutes) permanent damage to the station batteries due to reverse polarity may occur AND the steam generators must not be depressurized to less than 200 psig to prevent injecting nitrogen from the accumulators.

K/A
056 Loss of Off-site Power
AK3.02 Knowledge of the reasons for the following responses as they apply to the Loss of Offsite Power: Actions contained in EOP for loss of offsite power.

K/A MATCH ANALYSIS
The question tests the reasons behind Steps 15 and 18 of ECA-0.0, which are actions that must be taken when a loss of all AC occurs. A loss of all AC includes a loss of Offsite Power, along with EDGs failing to energize their respective safety buses; therefore, the K/A is met. This information, although it is basis-type information, is contained in caution statements and is appropriate for ROs to know.

ANSWER / DISTRACTOR ANALYSIS
A. Incorrect. Void creation is also incorrect. Plausible because in a quick cooldown situation, the reactor head will remain hot and create the potential for voids to form. This is not an issue even if voids do form, thus the reason is incorrect, but plausible.
B. Correct. See caution statements prior to Steps 15 and 18 in 19100, ECA-0.0, and LP Page 7 and 9.
C. Incorrect. Reverse polarity concerns are dealt with in Step 16, which provides guidance to open the battery breaker when voltage reaches < 105V dc. Plausible because reasons detailed in "A" regarding steam bubble formation. Also plausible because reverse polarity is an actual basis for a subsequent step.
D. Incorrect. Reverse polarity concerns are dealt with in Step 16, which provides guidance to open the battery breaker when voltage reaches < 105V dc. Plausible because nitrogen injection is the actual concern with depressing. Also plausible because reverse polarity is an actual basis for a subsequent step.

REFERENCES
1. 19100, ECA-0.0 Loss of All AC, Rev. 28, 12/19/2003.
2. LO-LP-37031-15-C, Loss of All AC Power, Rev. 15, 12/14/2000.

MCS	Time:	1	Points:	1.00	Version:	0 1 2 3 4 5 6 7 8 9	
					Answer:	B C A B B D A D B B	Scramble Range: A - D
Tier:		1			Group:	1	
Key Word:		LOSS OF ALL AC			Cog Level:	MEM 4.4	
Source:		N			Exam:	VG05301	
Test:		R			Author/Reviewer:	MAB/RSB	

39. 056AK3.02 001

During performance of 19100, ECA-0.0 Loss of All AC Power, operators encounter steps that have them open several electrical equipment room doors (Step 15) and to depressurize the steam generators to 300 psig, but not less than 200 psig (Step 18).

Which ONE of the following correctly states the reasons for these two steps?

A. A loss of control power could occur if electrical equipment room doors are not opened within 60 minutes of losing AC power and the steam generators must not be depressurized to less than 200 psig to prevent a steam bubble in the reactor vessel head.

B. A loss of control power could occur if electrical equipment room doors are not opened within 30 minutes of losing AC power and the steam generators must not be depressurized to less than 200 psig to prevent a steam bubble in the reactor vessel head.

C. A loss of control power could occur if electrical equipment room doors are not opened within 60 minutes of losing AC power and the steam generators must not be depressurized to less than 200 psig to prevent injecting nitrogen from the accumulators.

D. A loss of control power could occur if electrical equipment room doors are not opened within 30 minutes of losing AC power and the steam generators must not be depressurized to less than 200 psig to prevent injecting nitrogen from the accumulators.

K/A
056 Loss of Off-site Power
AK3.02 Knowledge of the reasons for the following responses as they apply to the Loss of Offsite Power: Actions contained in EOP for loss of offsite power.

K/A MATCH ANALYSIS
The question tests the reasons behind Steps 15 and 18 of ECA-0.0, which are actions that must be taken when a loss of all AC occurs. A loss of all AC includes a loss of Offsite Power, along with EDGs failing to energize their respective safety buses; therefore, the K/A is met. This information, although it is basis-type information, is contained in caution statements and is appropriate for ROs to know.

ANSWER / DISTRACTOR ANALYSIS
A. Incorrect. 60 minutes is incorrect. Void creation is also incorrect. Plausible because in a quick cooldown situation, the reactor head will remain hot and create the potential for voids to form. This is not an issue even if voids do form, thus the reason is incorrect, but plausible.
B. Incorrect. Void creation is incorrect. Plausible for same reason as above.
C. Incorrect. 60 minutes is incorrect. Plausible because reason is correct (partially correct answer).
D. Correct. See caution statements prior to Steps 15 and 18 in 19100, ECA-0.0.

REFERENCES
1. 19100, ECA-0.0 Loss of All AC, Rev. 28, 12/19/2003.
2. LO-LP-37031-15-C, Loss of All AC Power, Rev. 15, 12/14/2000.

MCS	Time: 1	Points: 1.00	Version:	0 1 2 3 4 5 6 7 8 9			
			Answer:	D A D B B A B A C A	Scramble Range: A - D		
Tier:	1			Group:	1		
Key Word:	LOSS OF ALL AC			Cog Level:	MEM 4.4		
Source:	N			Exam:	VG05301		
Test:	R			Author/Reviewer:	MAB/RSB		

3. 056AK3.02 001

During performance of 19100, ECA-0.0 Loss of All AC Power, operators encounter steps that have them open several electrical equipment room doors (Step 15) and to depressurize the steam generators to 300 psig, but not less than 200 psig (Step 18).

Which ONE of the following correctly states the reasons for these two steps?

A. A loss of control power could occur if electrical equipment room doors are not opened within 60 minutes of losing AC power and the steam generators must not be depressurized to less than 200 psig to prevent a steam bubble in the reactor vessel head.

B. A loss of control power could occur if electrical equipment room doors are not opened within 30 minutes of losing AC power and the steam generators must not be depressurized to less than 200 psig to prevent a steam bubble in the reactor vessel head.

C. A loss of control power could occur if electrical equipment room doors are not opened within 60 minutes of losing AC power and the steam generators must not be depressurized to less than 200 psig to prevent injecting nitrogen from the accumulators.

D. A loss of control power could occur if electrical equipment room doors are not opened within 30 minutes of losing AC power and the steam generators must not be depressurized to less than 200 psig to prevent injecting nitrogen from the accumulators.

K/A
056 Loss of Off-site Power
AK3.02 Knowledge of the reasons for the following responses as they apply to the Loss of Offsite Power: Actions contained in EOP for loss of offsite power.

K/A MATCH ANALYSIS
The question tests the reasons behind Steps 15 and 18 of ECA-0.0, which are actions that must be taken when a loss of all AC occurs. A loss of all AC includes a loss of Offsite Power, along with EDGs failing to energize their respective safety buses; therefore, the K/A is met. This information, although it is basis-type information, is contained in caution statements and is appropriate for ROs to know.

ANSWER / DISTRACTOR ANALYSIS
A. Incorrect. 60 minutes is incorrect. Void creation is also incorrect. Plausible because in a quick cooldown situation, the reactor head will remain hot and create the potential for voids to form. This is not an issue even if voids do form, thus the reason is incorrect, but plausible.
B. Incorrect. Void creation is incorrect. Plausible for same reason as above.
C. Incorrect. 60 minutes is incorrect. Plausible because reason is correct (partially correct answer).
D. Correct. See caution statements prior to Steps 15 and 18 in 19100, ECA-0.0.

REFERENCES
1. 19100, ECA-0.0 Loss of All AC, Rev. 28, 12/19/2003.
2. LO-LP-37031-15-C, Loss of All AC Power, Rev. 15, 12/14/2000.

MCS	Time:	1	Points:	1.00	Version:	0 1 2 3 4 5 6 7 8 9	
					Answer:	D A D B B A B A C A	Scramble Range: A - D
Tier:		1			Group:	1	
Key Word:		LOSS OF ALL AC			Cog Level:	MEM 4.4	
Source:		N			Exam:	VG05301	
Test:		R			Author/Reviewer:	MAB/RSB	

7. 056AK3.02 001

During performance of 19100, ECA-0.0 Loss of All AC Power, operators encounter steps that have them open several electrical equipment room doors (Step 15) and to depressurize the steam generators to 300 psig, but not less than 200 psig (Step 18).

Which ONE of the following correctly states the reasons for these two steps?

A. A loss of control power could occur if electrical equipment room doors are not opened within 60 minutes of losing AC power and the steam generators must not be depressurized to less than 200 psig due to potential creation of voids in the reactor vessel head.

B. A loss of control power could occur if electrical equipment room doors are not opened within 30 minutes of losing AC power and the steam generators must not be depressurized to less than 200 psig due to potential creation of voids in the reactor vessel head.

C. A loss of control power could occur if electrical equipment room doors are not opened within 60 minutes of losing AC power and the steam generators must not be depressurized to less than 200 psig due to the potential to inject water from the accumulators.

D. A loss of control power could occur if electrical equipment room doors are not opened within 30 minutes of losing AC power and the steam generators must not be depressurized to less than 200 psig due to the potential to inject water from the accumulators.

K/A
056 Loss of Off-site Power
AK3.02 Knowledge of the reasons for the following responses as they apply to the Loss of Offsite Power: Actions contained in EOP for loss of offsite power.

K/A MATCH ANALYSIS
The question tests the reasons behind Steps 15 and 18 of ECA-0.0, which are actions that must be taken when a loss of all AC occurs. A loss of all AC includes a loss of Offsite Power, along with EDGs failing to energize their respective safety buses; therefore, the K/A is met. This information, although it is basis-type information, is contained in caution statements and is appropriate for ROs to know.

ANSWER / DISTRACTOR ANALYSIS
A. Incorrect. 60 minutes is incorrect. Void creation is also incorrect. Plausible because in a quick cooldown situation, the reactor head will remain hot and create the potential for voids to form. This is not an issue even if voids do form, thus the reason is incorrect, but plausible.
B. Incorrect. Void creation is incorrect. Plausible for same reason as above.
C. Incorrect. 60 minutes is incorrect. Plausible because reason is correct (partially correct answer).
D. Correct. See caution statements prior to Steps 15 and 18 in 19100, ECA-0.0.

REFERENCES
1. 19100, ECA-0.0 Loss of All AC, Rev. 28, 12/19/2003.
2. LO-LP-37031-15-C, Loss of All AC Power, Rev. 15, 12/14/2000.

MCS	Time:	1	Points:	1.00	Version:	0 1 2 3 4 5 6 7 8 9	
					Answer:	D A D B B A B A C A	Scramble Range: A - D
Tier:		1			Group:	1	
Key Word:		LOSS OF ALL AC			Cog Level:	MEM 4.4	
Source:		N			Exam:	VG05301	
Test:		R			Author/Reviewer:	MAB/RSB	

III. LESSON OUTLINE: NOTES

3. Procedure 19100 actions (use 19100 as a guide)

Objective 8
Note: ensure students know how to perform each step procedure

a. Perform immediate actions verifying RCS isolation and secondary heat sink availability (Steps 1-2)

b. RCPs should be stopped due to loss of seal injection and ACCW to the thermal barrier (Step 5)

1) This prevents premature degradation of the RCP seals

c. Restore AC power - optimal recovery is always to do whatever you can to get AC power back ASAP (Steps 6-8)

1) While power is off motor breakers are opened and automatic loading defeated to permit operator control on restoration of power

d. Maintain plant conditions for optimal recovery. That is, depressurize the secondary (Steps 9-25)

1) Step 18 is a judgement point; SS must guess at expected duration until electrical power is restored

a) If short, hold ground and wait

b) If long, begin depressurization

2) Will require local actions to release steam via SGARVs. Hard to coordinate cooldown rate with control room

Takes ≅ < 3 mins. & 100 - 200 hand pump strokes to locally cycle each SGARV

3) Step 15 is important to in order to maintain instrument power, control bldg electrical equipment room doors must be opened within **30 minutes** to preclude inverter overheating and loss of instrument power.

5) In Step 16 it is important to monitor battery voltages. If voltage drops to 105V DC or less, the battery breaker is opened to prevent permanent damage to the station batteries due to reverse polarity

6) Note that per step 25, when power is not restored in 60 minutes, then CR lighting will be swapped to the unaffected units AC power supply.

7) Operational loop is repeated until power is restored

b) Loss of all AC power philosophy is to defeat automatic loading of AC emergency bus

c) If diesels start, cooling water is supplied immediately to prevent loss of diesel

b. Caution before Step 12

1) A faulted or ruptured SG that is isolated should remain isolated. Steam supply to the TDAFW pump must be maintained from at least one SG

a) First part reminds operator to keep faulted/ruptured SG isolated to maximize operator control of secondary pressure and minimize radioactive releases

c. Caution prior to step 13

1) SG sample valves should be opened one at a time and shut before opening another sample valve

d. Caution before Step 18 Note before Step 18:

1) To prevent injection of accumulator nitrogen into the RCS, SG pressure should not be lowered to less than 200 psig

Need to control S/G depress so that TDAFW pump capacity will not be exceeded

a) Ensures that accumulator nitrogen will not impede natural circulation

2) SG narrow range level should be maintained greater than 10% (32% for adverse containment) in at least one intact SG. If level cannot be maintained, SG depressurization should be stopped until level is restored in at least one SG

a) Maintains secondary heat sink at all times

e. Caution before Step 28

1) The loads placed on the energized AC emergency bus should not exceed the capacity of the power source

a) As equipment is manually loaded

ACTION/EXPECTED RESPONSE	RESPONSE NOT OBTAINED

CAUTION:

- To prevent injection of accumulator nitrogen into the RCS, SG pressure should not be lowered to less than 200 psig.
- SG NR level should be maintained GREATER THAN 10% [32% ADVERSE] in at least one intact SG. If level cannot be maintained, SG depressurization should be stopped until level is restored in at least one SG.

NOTE:

- The SGs should be depressurized at maximum rate (within the capacity of the TDAFW pump) to minimize RCS inventory loss.
- PRZR level may be lost and reactor vessel upper head voiding may occur due to depressurization of the SGs. Depressurization should not be stopped to prevent these occurrences.

*18. Depressurize intact SGs to 300 psig:	
a. Check SG NR levels - GREATER THAN 10% [32% ADVERSE] IN AT LEAST ONE SG.	a. Perform the following: 1) IF all SG NR levels less than 10% [32% ADVERSE], THEN maintain maximum TDAFW flow. 2) WHEN NR level in at least one SG greater than 10% [32% ADVERSE], THEN perform Steps 18b, c, d. Continue with Step 19.

ACTION/EXPECTED RESPONSE RESPONSE NOT OBTAINED

CAUTION: Equipment failures and loss of control power may occur if doors are not opened within 30 minutes of onset of loss of AC power.

15. Open all doors that have installed door stops in the following Control Building electrical equipment rooms:

    UNIT 1 B47, B48, B52, B55, B61, B76, B63

    UNIT 2 B26, B29, B31, B36, B04, B18, B30

My copy from work @ home.

056AK3.02

During a loss of all AC power, operators encounter steps that have them open several electrical equipment room doors and to depressurize the steam generators to 300 psig, but not less than 200 psig.

Which ONE of the following correctly states the reasons for these steps?

A. A loss of control power could occur if electrical equipment room doors are not opened within 60 minutes and the steam generators must not be depressurized to less than 200 psig due to potential creation of voids in the reactor vessel head.

B. A loss of control power could occur if electrical equipment room doors are not opened within 30 minutes and the steam generators must not be depressurized to less than 200 psig due to potential creation of voids in the reactor vessel head.

C. A loss of control power could occur if electrical equipment room doors are not opened within 60 minutes and the steam generators must not be depressurized to less than 200 psig due to potential to inject water from the accumulators.

D. A loss of control power could occur if electrical equipment room doors are not opened within 30 minutes and the steam generators must not be depressurized to less than 200 psig due to potential to inject water from the accumulators.

40. 057AA1.04 001

The following Unit 1 conditions exists:

- The plant is in its normal configuration.
- LT-112, VCT Level Transmitter, failed low 30 minutes ago.
- 1AY2A, 120V AC Vital Instrument Distribution Panel, de-energizes due to a fault.

Which ONE of the following correctly describes the response of the Centrifugal Charging Pumps (CCP) suction supply valves from the VCT and RWST (assume no operator action)?

A. LV-0112E (RWST to CCPs) opens and LV-0112C (VCT to CCPs & NCPs) closes. LV-0112D (RWST to CCPs) and LV-0112B (VCT to CCPs & NCPs) will not reposition.

B. LV-0112D (RWST to CCPs) opens and LV-0112B (VCT to CCPs & NCPs) closes. LV-0112E (RWST to CCPs) and LV-0112C (VCT to CCPs & NCPs) will not reposition.

C. LV-0112D and E (RWST to CCPs) open and LV-0112B and C (VCT to CCPs & NCPs) close.

D. LV-0112D and E (RWST to CCPs) and LV-0112B and C (VCT to CCPs & NCPs) will not reposition.

K/A
057 Loss of Vital AC Inst. Bus
AA1.04 Ability to operate and / or monitor the following as they apply to the Loss of Vital AC Instrument Bus: RWST and VCT valves.

K/A MATCH ANALYSIS
1AY2A is a vital instrument AC panel that supplies power to a VCT level transmitter. The VCT level transmitters are not supplied by vital AC, therefore, losing a vital ac bus has no affect on the CCP suction valve auto-swap feature. The question tests knowledge of the positioning (or lack thereof) of the RWST and VCT valves when a vital AC bus is lost.

ANSWER / DISTRACTOR ANALYSIS
D. Correct. All four valves do not reposition because the 2/2 LTs logic is still not made-up. The vital bus that is lost has no impact on the VCT level transmitter.
A / B / C. Incorrect. Plausible if applicants are not sure how the loss of the power supply will affect the swapover.

REFERENCES
1. V-LO-TX-09101, Chemical and Volume Control System, Rev. 3.0.
2. Farley 2003-301 RO Exam Question 057AA1.04.

MCS	Time:	1	Points:	1.00	Version:	0 1 2 3 4 5 6 7 8 9	
					Answer:	D C A C A B D D D B	Scramble Range: A - D
Tier:		1			Group:	1	
Key Word:		VCT AUTO SWAPOVER			Cog Level:	C/A 3.5	
Source:		M			Exam:	VG05301	
Test:		R			Author/Reviewer:	MAB/RSB	

1. 057AA1.04 001

The following Unit 1 conditions exists:

- The plant is in its normal configuration.
- LT-112, VCT Level Transmitter, failed low 30 minutes ago.
- 1AY2A, 120V AC Vital Instrument Distribution Panel, de-energizes due to a fault.

Which ONE of the following correctly describes the response of the Centrifugal Charging Pumps (CCP) suction supply valves from the VCT and RWST (assume no operator action)?

A. LV-0112E (RWST to CCPs) opens and LV-0112C (VCT to CCPs & NCPs) closes. LV-0112D (RWST to CCPs) and LV-0112B (VCT to CCPs & NCPs) will not reposition.

B. LV-0112D (RWST to CCPs) opens and LV-0112B (VCT to CCPs & NCPs) closes. LV-0112E (RWST to CCPs) and LV-0112C (VCT to CCPs & NCPs) will not reposition.

C. LV-0112D and E (RWST to CCPs) open and LV-0112B and C (VCT to CCPs & NCPs) close.

D. LV-0112D and E (RWST to CCPs) and LV-0112B and C (VCT to CCPs & NCPs) will not reposition.

K/A
057 Loss of Vital AC Inst. Bus
AA1.04 Ability to operate and / or monitor the following as they apply to the Loss of Vital AC Instrument Bus: RWST and VCT valves.

K/A MATCH ANALYSIS
1AY2A is a vital instrument AC panel that supplies power to a VCT level transmitter. The VCT level transmitters are not supplied by vital AC, therefore, losing a vital ac bus has no affect on the CCP suction valve auto-swap feature. The question tests knowledge of the positioning (or lack thereof) of the RWST and VCT valves when a vital AC bus is lost.

ANSWER / DISTRACTOR ANALYSIS
D. Correct. All four valves do not reposition because the 2/2 LTs logic is still not made-up. The vital bus that is lost has no impact on the VCT level transmitter.
A / B / C. Incorrect. Plausible if applicants are not sure how the loss of the power supply will affect the swapover.

REFERENCES
1. V-LO-TX-09101, Chemical and Volume Control System, Rev. 3.0.
2. Farley 2003-301 RO Exam Question 057AA1.04.

MCS	Time:	1	Points:	1.00	Version:	0 1 2 3 4 5 6 7 8 9	
					Answer:	D C A C A B D D D B	Scramble Range: A - D

Tier:	1	Group:	1
Key Word:	VCT AUTO SWAPOVER	Cog Level:	C/A 3.5
Source:	M	Exam:	VG05301
Test:	R	Author/Reviewer:	MAB/RSB

Each charging pump has minimum flow lines utilizing flow orifices which protect the centrifugal charging pumps during low flow conditions. Each CCP's minimum flow line has an individual motor-operated isolation valve (HV-8111A and HV-8111B). The individual lines combine, and the flow then passes through common isolation valve (HV-8110) to the volume control tank via the #1 seal water leak off return header. The NCP also has a mini-flow line that connects to the CCP mini-flow line upstream of the CCP common mini-flow isolation valve HV-8110.

During normal operations, a portion of the charging flow (32 gpm) is directed to the reactor coolant pump seals through the seal-water-injection filters. This flow enters the pumps at a point between the labyrinth seal and the number 1 seal. A portion of the flow (20 gpm) enters the RCS through the labyrinth seals and the thermal-barrier-cooler cavity; this flow is removed from the RCS as a portion of the letdown flow. The majority of the remaining 12 gpm flows up the pump shaft and leaves the pumps through the number 1 seal return flow line. The number 1 seal discharges flow to a common manifold, exits from the containment, and passes through the seal-water filter and the seal-water heat exchanger to the suction side of the charging pumps, or by an alternate path to the VCT. The alternate path enters the VCT through a spray nozzle which is used in conjunction with excess letdown to provide RCS gas control.

A very small portion of the seal flow leaks through to the number 2 seal. The number 2 seal leak off flow is discharged to the Reactor Coolant Drain Tank (RCDT) in the Liquid Water Processing System. The number 3 seal injection is provided by the Reactor Makeup Water System (via a standpipe), and the number 3 seal leak off flow is discharged to the containment sump.

RCP seal water injection flow is established as a part of the CVCS startup in preparation for plant startup. During normal operations, including maintenance that does not require system shutdown, RCP seal injection remains in service.

If RCP maintenance involves uncoupling of the RCP motor/pump, the seal injection system can not be operated. When the motor/pump is uncoupled the pump shaft drops slightly. A spherical surface on the shaft journal bearing mates with a seating surface on top of the seal water heat exchanger acting as a low pressure valve assembly, to minimize leakage up the shaft during maintenance. If seal water is supplied during this condition a hydraulic lock occurs on this low pressure valve assembly and on the seal cartridge, preventing injection flow to the RCP seal assembly.

9.6 MAJOR COMPONENTS OF THE NORMAL CHARGING FLOW PATH

VCT Outlet Isolation Valves LV-112B, LV-112C

The VCT outlet isolation valves are normally open, thus aligning the VCT inventory to the suction of operating CCP or NCP. These valves provide positive isolation between the RWST which serves as alternate suction supply for the CCPs during abnormal or accident conditions. Leaving the VCT aligned to the CCPs during accident conditions would result in potential gas entrainment since the VCT contains a cover gas. The QMCB hand switch is a spring return to AUTO after Close or Open. Automatic control signals will actuate the valve to a CLOSE position when two interlocks are present. The first one is that a SI signal is active and the corresponding RWST suction valve is open. That is, LV-112B, sees an SI signal and HV-112D, the suction supply from the RWST is open. The other signal is VCT Low-Low level on both LI-185 and LI-112 with HV-112D fully OPEN.

RWST to CCP Suction Isolation Valves, HV-112D, HV-112E

Refueling water storage tank to charging pump suction motor-operated isolation valves (LV-112D and LV-112E) are operated from hand switches located on the QMCB. The respective train related valve can also be operated from the shutdown panel. They also receive signals to automatically open on an SI signal and a VCT low-low level(2/2 level transmitters < 5.7 %).

Centrifugal Charging Pumps

The CCPs are normally in standby alignment as required by LCO 3.5.2. This alignment ensures their availability for injection during an accident requiring emergency core cooling injection flow. Their safety function is to provide high head injection into the RCS through the BIT isolation valves HV-8801A and HV-8801B during a loss of RCS inventory. The pumps are powered from 1E 4160 volt electrical busses, AA02 and BA03 respectively. The pumps are single speed, 11 series-staged, multi-vane, diffuser type centrifugal pumps. Design pressure and temperature are 2800 psig and 300°F with a design flow of 150 gpm. QMCB hand switch positions are PULL-TO-LOCK and spring return to AUTO from the START or STOP positions. The CCPs can also be operated from the Shutdown Panels. The CCP suction, as well as the NCP suction supply header is provided overpressure protection by PSV-8124 which lifts at 220 psig to the RHUT.

Each CCP has an auxiliary lube oil pump (ALOP) that automatically starts when low shaft driven oil pump discharge pressure lowers. This occurs when the pump is stopped or if a failure of the shaft-driven oil pump occurred. The ALOP hand switch is located in the pump room and has two positions - STOP and AUTO. The pump motor cooler and lube oil cooler are cooled by NSCW. Power supplies are 1NBH and 1NBK respectively.

The CCPs are automatically started by the Sequencer if a SI signal is processed. If an undervoltage condition occurs and the Emergency diesel generator starts and re-energizes the 4160 V 1E bus, the UV sequencer will automatically start the train-related CCP at 0.5 seconds after the EDG output breaker closes.

Automatic trip signals are phase and ground overcurrent. The CCP's power supply breaker also gets a trip open signal during a sequencer load shed signal when bus undervoltage is sensed.

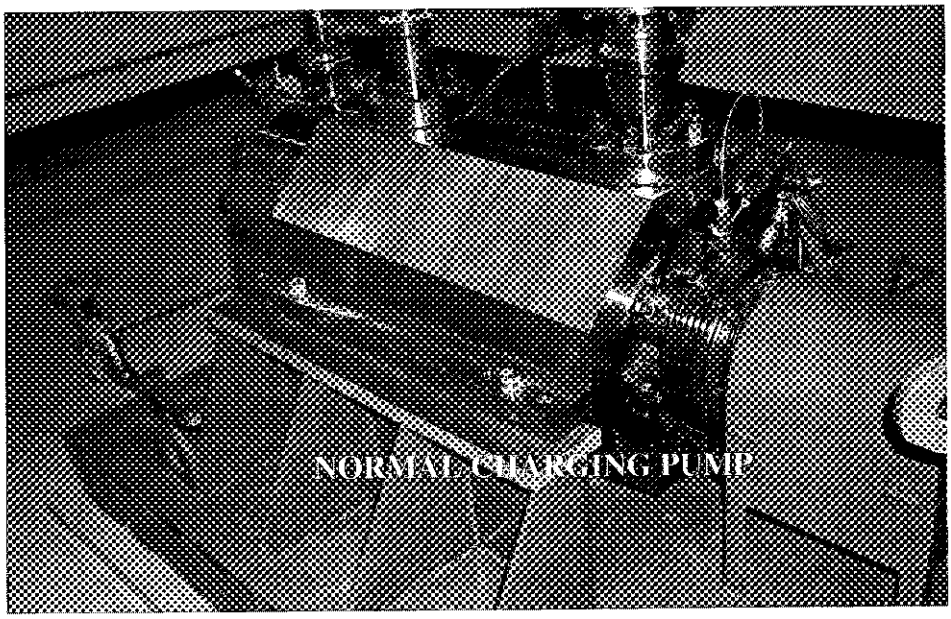

NORMAL CHARGING PUMP

The Normal Charging Pump is a 12 stage centrifugal pump that can deliver 130 gpm of flow at 2543 psig. The NCP is powered by 1/2NA05 Non-1E 4160 VAC, cooled by the ACCW system, and is installed parallel with the CCPs. Although it provides no safety related function, it does qualify as an "Emergency Boration Flow path". The NCP is normally

40. 057AA1.04 001

The following Unit 1 conditions exists:

- The plant is in its normal configuration.
- LT-112, VCT Level Transmitter, failed low 30 minutes ago.
- A power decrease from 95% to 75% of rated thermal power was completed five minutes ago.
- 1NY2N, 120V AC Essential Instrument Distribution Panel de-energizes due to a fault.

Which ONE of the following correctly describes the reason for control rods stepping in (assume no operator action)?

A. Control rods step in due to LV-0112E (RWST to CCPs) opening and LV-0112C (VCT to CCPs & NCPs) closing. LV-0112D (RWST to CCPs) and LV-0112B (VCT to CCPs & NCPs) will not reposition.

B. Control rods step in due to LV-0112D (RWST to CCPs) opening and LV-0112B (VCT to CCPs & NCPs) closing. LV-0112E (RWST to CCPs) and LV-0112C (VCT to CCPs & NCPs) will not reposition.

C. Control rods step in due to LV-0112D and E (RWST to CCPs) opening and LV-0112B and C (VCT to CCPs & NCPs) closing.

D. Control rods step in due only to xenon burning out. LV-0112D and E (RWST to CCPs) and LV-0112B and C (VCT to CCPs & NCPs) will not reposition.

(1NY2N through the 7300 Control Panel Rack #4 was identified as the power source for LT-185 by Thad Thompson of the licensee. This was only a preliminary response and the power supply still needed to be verified. - - ENSURE UTILITY VERIFIES POWER SUPPLY during their review.)

K/A
057 Loss of Vital AC Inst. Bus
AA1.04 Ability to operate and / or monitor the following as they apply to the Loss of Vital AC Instrument Bus: RWST and VCT valves.

K/A MATCH ANALYSIS
1NY2N is an essential instrument AC panel that supplies power to a VCT level transmitter. When the transmitter loses power, the CCP/NCP suction will swap from the VCT to the RWST, thus initiating a boration. The question tests knowledge of the positioning of the RWST and VCT valves.

ANSWER / DISTRACTOR ANALYSIS
C. Correct. All four valves reposition when the 2/2 LTs indicate VCT L=0%.
A / B / D. Incorrect. Plausible if applicants are not sure how the loss of the power supply will affect the swapover.

REFERENCES
1. V-LO-TX-09101, Chemical and Volume Control System, Rev. 3.0.
2. Farley 2003-301 RO Exam Question 057AA1.04.

MCS	Time:	1	Points:	1.00	Version:	0 1 2 3 4 5 6 7 8 9	
					Answer:	C B C C D C C C D C	Scramble Range: A - D
Tier:		1			Group:	1	
Key Word:		VCT AUTO SWAPOVER			Cog Level:	C/A 3.5	
Source:		M			Exam:	VG05301	
Test:		R			Author/Reviewer:	MAB/RSB	

4. 057AA1.04 001

The following Unit 1 conditions exists:

- The plant is in its normal configuration.
- LT-112, VCT Level Transmitter, failed low 30 minutes ago.
- A power decrease from 95% to 75% of rated thermal power was completed five minutes ago.
- 1NY2N, 120V AC Essential Instrument Distribution Panel de-energizes due to a fault.

Which ONE of the following correctly describes the reason for control rods stepping in (assume no operator action)?

A. Control rods step in due to LV-0112E (RWST to CCPs) opening and LV-0112C (VCT to CCPs & NCPs) closing. LV-0112D (RWST to CCPs) and LV-0112B (VCT to CCPs & NCPs) will not reposition.

B. Control rods step in due to LV-0112D (RWST to CCPs) opening and LV-0112B (VCT to CCPs & NCPs) closing. LV-0112E (RWST to CCPs) and LV-0112C (VCT to CCPs & NCPs) will not reposition.

C. Control rods step in due to LV-0112D and E (RWST to CCPs) opening and LV-0112B and C (VCT to CCPs & NCPs) closing.

D. Control rods step in due only to xenon burning out. LV-0112D and E (RWST to CCPs) and LV-0112B and C (VCT to CCPs & NCPs) will not reposition.

(1NY2N through the 7300 Control Panel Rack #4 was identified as the power source for LT-185 by Thad Thompson of the licensee. This was only a preliminary response and the power supply still needed to be verified. - - ENSURE UTILITY VERIFIES POWER SUPPLY during their review.)

K/A
057 Loss of Vital AC Inst. Bus
AA1.04 Ability to operate and / or monitor the following as they apply to the Loss of Vital AC Instrument Bus: RWST and VCT valves.

K/A MATCH ANALYSIS
1NY2N is an essential instrument AC panel that supplies power to a VCT level transmitter. When the transmitter loses power, the CCP/NCP suction will swap from the VCT to the RWST, thus initiating a boration. The question tests knowledge of the positioning of the RWST and VCT valves.

ANSWER / DISTRACTOR ANALYSIS
C. Correct. All four valves reposition when the 2/2 LTs indicate VCT L=0%.
A / B / D. Incorrect. Plausible if applicants are not sure how the loss of the power supply will affect the swapover.

REFERENCES
1. V-LO-TX-09101, Chemical and Volume Control System, Rev. 3.0.
2. Farley 2003-301 RO Exam Question 057AA1.04.

MCS	Time:	1	Points:	1.00	Version:	0	1	2	3	4	5	6	7	8	9
					Answer:	C	B	C	C	D	C	C	C	D	C

Scramble Range: A - D

Tier:	1	Group:	1
Key Word:	VCT AUTO SWAPOVER	Cog Level:	C/A 3.5
Source:	M	Exam:	VG05301
Test:	R	Author/Reviewer:	MAB/RSB

LI-0112	VCT LEVEL	LI-0185
Trip open 112A	97%	Modulate 112A full divert (if LIC-0185 pot @8.70)
Hi level alarm	92%	
112A Trip Open signal Resets	87%	112A starts to divert (if LIC-0185 pot @8.70)
Auto Makeup stops	50%	
Auto Makeup starts	30%	
Low level alarm	20%	Low level alarm
RWST auto swap over	5.7%(2 of 2)	RWST auto swap over

VCT level transmitter failures have been analyzed for failures that could lead to loss of NPSH resulting in cavitation or gas binding. Discuss SOER 97-1 (item B) in the Operating Experience section.

Volume Control Tank

The Volume Control Tank also performs the following functions:

* Introduces hydrogen into the coolant to control and scavenge oxygen produced by radiolysis of water in the core during normal operation
* Provides a means of degassing the reactor coolant
* Provides sufficient net positive suction head (NPSH) for the charging pumps
* Provides a location to accept makeup water to adjust Reactor Coolant System boron concentration
* Provides backpressure for the #1 reactor coolant pump seals

The tank is fabricated from austenitic stainless steel, complete with relief protection, sampling, hydrogen and nitrogen connections. It has a capacity of 400 cubic ft (3000 gal). The tank is located in the auxiliary building and is shielded for personnel protection.

The tank also provides a means for introducing hydrogen into the coolant to maintain the required equilibrium concentration of 25 to 50 cm^3 hydrogen/kg water and is used for degassing the reactor coolant. A spray nozzle located inside the tank on the letdown line provides liquid-to-gas contact between the incoming fluid and the hydrogen atmosphere in the tank. At power operation, hydrogen from the Auxiliary Hydrogen Gas System header in the Auxiliary Building is continuously supplied to the volume control tank via a pressure control valve, PCV-8156. Another penetration in the VCT allows for the VCT gas space to be aligned to the gaseous waste processing system(WPSG). This permits continuous removal of any gaseous fission products which are stripped from the reactor coolant and collected in this tank. Pressure in the VCT is maintained at approximately 25 psig during power operations. If VCT pressure lowers to 15 psig, the VCT isolation valve to the WPSG flow normally goes directly to the suction of the charging pumps.

The safety relief valve (PSV-8120)on the volume control tank permits the tank to be designed for a lower pressure than the upstream equipment. This valve has a capacity equal to the summation of the following items: maximum letdown, normal seal water return, excess letdown, and nominal flow from one reactor makeup water pump. The valve set pressure, 75 psig, is equal to the design pressure of the volume control tank. The relief valve discharges to the RHUT.

QUESTIONS REPORT

for Westinghouse 3 Loop Questions

1. 057AA1.04 001

Given the following plant conditions:

- Unit 1 is holding at 25% power due to problems with DEH during a plant startup.
- Rod control is in AUTO, with Bank D rods at 174 steps.
- VCT level transmitter, LT-112, failed low 30 minutes ago. Same LT designation
- I&C is troubleshooting Power Range Nuclear Instrument N-41 because of a blown fuse.

Which ONE of the following conditions will occur if power is lost to the 1A 120V AC Vital Bus?

A. A reactor trip will occur.

B. A boration of the RCS will begin since LCV-115D, RWST to CHG PUMP, will open and LCV-115E, VCT Outlet ISO, will close.

C. Control rods will begin stepping in.

D. A boration of the RCS will begin since LCV-115B, RWST to CHG PUMP, will open and LCV-115C, VCT Outlet ISO, will close.

Source: Modified from Farley Bank Question #120 VAC-40204F07

A - Incorrect; A reactor trip would occur if another PRNI channel, other than N-41, had already been placed in a tripped condition.

B - Incorrect; Valves LCVs 115D and E are powered from Aux Safeguards Cabinet B.

C - Incorrect; Rods will step out as a result of the boration.

D - Correct; A boration of the RCS will occur since power was lost to 1A 120V AC Vital Bus causing LCV-115B, RWST to CHG PUMP, to open and LCV-115C, VCT Outlet ISO, to close. (Aux Safeguards Cabinet A)

MCS	Time:	1	Points:	1.00	Version:	0 1 2 3 4 5 6 7 8 9	
					Answer:	D B C B D C B B A C	Scramble Range: A - D

RO Tier:	1	SRO Tier:	1
K/A Value:		Cog. Level:	C/A 3.5/3.6
Source:	M	Exam:	FA03301
Test:	R	Misc:	SDR

41. 058AA2.02 001

Unit 1 has the following conditions:

- Unit is at 100% power
- Diesel Generator '1A' is paralled with its safety bus for surveillance
- Pressurizer presure control is selected to 455/456
- Pressurizer level control is selected to 459/456 → 460

The crew notes that the following Main Control Room annunciators are received followed by an automatic reactor trip.

- 125V DC SWGR 1AD1 TROUBLE
- 125V DC MCC 1AD1M TROUBLE
- 125V DC PNL 1AD12 TROUBLE
- 120V AC PANELS 1AY1A 1AY2A TROUBLE
- INVERTERS 1AD1I1 1AD1I11 TROUBLE
- 125V DC PNL 1AD11 TROUBLE

Which ONE of the following correctly describes the plant response?

A. The reactor trips on Pressurizer High Pressure.
Diesel Generator 1A output breaker opens.

B. ✓ The reactor trips on Pressurizer High Pressure.
Diesel Generator 1A output breaker remains closed.

C. The reactor trips on OT-delta-T.
Diesel Generator 1A output breaker opens.

D. The reactor trips on OT-delta-T.
Diesel Generator 1A output breaker remains closed.

K/A
058 Loss of DC Power
AA2.02 Ability to determine and interpret the following as they apply to Loss of DC Power: 125 V dc bus voltage, low/critical low, alarm.

K/A MATCH ANALYSIS
Part of interpreting the alarms is verifying the expected plant response based on those alarms. This question provides a plant situation where the operator is provided with indications of a loss of DC and part of the interpretation of the alarms is verifying why the reactor tripped and whether or not the EDG responded as expected based on those conditions.

ANSWER / DISTRACTOR ANALYSIS
A. Incorrect. Output breaker does not open.
B. Correct. Output breaker fails as-is. Loss of 1AD1 creates a loss of 1AT1A. Loss of 1AY1A causes controlling P to fail low and all Pzr heaters energize and only one PORV (PV-456) is available.
C. Incorrect. Reactor will trip on Hi Pzr P. Plausible because OTdT actually trips the reactor if normal pressure control is available.
D. Incorrect. Reactor will trip on Hi Pzr P. Plausible because OTdT actually trips the reactor if normal pressure control is available.

This question was validated on the Vogtle simulator under many different conditions and every time the plant trips on Hi Pzr p within a few seconds of losing the dc bus.

REFERENCES
1. Vogtle Bank Question LO-LP-60329-02-09.
2. Vogtle Bank Question LO-LP-60329-02-10.
3. LO-LP-60329-06, Loss of 125V DC Power, Rev. 6, 02/28/2002.
4. 18034-1, Loss of Class 1E 125V DC Power, Rev. 7.1, 11/03/2003.
5. 17034-1, 125V DC SWGR 1AD1 TROUBLE, Rev. 16, 08/12/2004.

MCS	Time:	1	Points:	1.00	Version:	0 1 2 3 4 5 6 7 8 9	
					Answer:	B B A C C C D D A B	Scramble Range: A - D
Tier:		1			Group:	1	
Key Word:		LOSS OF DC BUS			Cog Level:	C/A 3.3	
Source:		M			Exam:	VG05301	
Test:		R			Author/Reviewer:	MAB/RSB	

2. 058AA2.02 001

Unit 1 has the following conditions:

- Unit is at 100% power
- Diesel Generator '1A' is paralled with its safety bus for surveillance
- Pressurizer presure control is selected to 455/456
- Pressurizer level control is selected to 459/456

The crew notes that the following Main Control Room annunciators are received followed by an automatic reactor trip.

- 125V DC SWGR 1AD1 TROUBLE
- 125V DC MCC 1AD1M TROUBLE
- 125V DC PNL 1AD12 TROUBLE
- 120V AC PANELS 1AY1A 1AY2A TROUBLE
- INVERTERS 1AD1I1 1AD1I11 TROUBLE
- 125V DC PNL 1AD11 TROUBLE

Which ONE of the following correctly describes the plant response?

A. The reactor trips on Pressurizer High Pressure.
Diesel Generator 1A output breaker opens.

B. ✓ The reactor trips on Pressurizer High Pressure.
Diesel Generator 1A output breaker remains closed.

C. The reactor trips on OT-delta-T.
Diesel Generator 1A output breaker opens.

D. The reactor trips on OT-delta-T.
Diesel Generator 1A output breaker remains closed.

K/A
058 Loss of DC Power
AA2.02 Ability to determine and interpret the following as they apply to Loss of DC Power: 125 V dc bus voltage, low/critical low, alarm.

K/A MATCH ANALYSIS
Part of interpreting the alarms is verifying the expected plant response based on those alarms. This question provides a plant situation where the operator is provided with indications of a loss of DC and part of the interpretation of the alarms is verifying why the reactor tripped and whether or not the EDG responded as expected based on those conditions.

ANSWER / DISTRACTOR ANALYSIS
A. Incorrect. Output breaker does not open.
B. Correct. Output breaker fails as-is. Loss of 1AD1 creates a loss of 1AT1A. Loss of 1AY1A causes controlling P to fail low and all Pzr heaters energize and only one PORV (PV-456) is available.
C. Incorrect. Reactor will trip on Hi Pzr P. Plausible because OTdT actually trips the reactor if normal pressure control is available.
D. Incorrect. Reactor will trip on Hi Pzr P. Plausible because OTdT actually trips the reactor if normal pressure control is available.

This question was validated on the Vogtle simulator under many different conditions and every time the plant trips on Hi Pzr p within a few seconds of losing the dc bus.

REFERENCES
1. Vogtle Bank Question LO-LP-60329-02-09.
2. Vogtle Bank Question LO-LP-60329-02-10.
3. LO-LP-60329-06, Loss of 125V DC Power, Rev. 6, 02/28/2002.
4. 18034-1, Loss of Class 1E 125V DC Power, Rev. 7.1, 11/03/2003.
5. 17034-1, 125V DC SWGR 1AD1 TROUBLE, Rev. 16, 08/12/2004.

MCS	Time: 1	Points: 1.00	Version:	0 1 2 3 4 5 6 7 8 9			
			Answer:	B B A C C C D D A B	Scramble Range: A - D		
Tier:	1			Group:	1		
Key Word:	LOSS OF DC BUS			Cog Level:	C/A 3.3		
Source:	M			Exam:	VG05301		
Test:	R			Author/Reviewer:	MAB/RSB		

41. 058AA2.02 001

Unit 1 has the following conditions:

- Unit is at 100% power
- Diesel Generator '1A' is paralled with its safety bus for surveillance
- Pressurizer presure control is selected to 455/456
- Pressurizer level control is selected to 459/456

The crew notes that the following Main Control Room annunciators are received followed by an automatic reactor trip.

- 125V DC SWGR 1AD1 TROUBLE
- 125V DC MCC 1AD1M TROUBLE
- 125V DC PNL 1AD12 TROUBLE
- 120V AC PANELS 1AY1A 1AY2A TROUBLE
- INVERTERS 1AD1I1 1AD1I11 TROUBLE
- 125V DC PNL 1AD11 TROUBLE

Which ONE of the following correctly describes the plant response?

A. The reactor trips on Lo-Lo Steam Generator Level. Diesel Generator 1A output breaker opens.

B. ✓ The reactor trips on Lo-Lo Steam Generator Level. Diesel Generator 1A output breaker remains closed.

C. The reactor trips on Hi Pressurizer Pressure. Diesel Generator 1A output breaker opens.

D. The reactor trips on Hi Pressurizer Pressure. Diesel Generator 1A output breaker remains closed.

K/A
058 Loss of DC Power
AA2.02 Ability to determine and interpret the following as they apply to Loss of DC Power: 125 V dc bus voltage, low/critical low, alarm.

K/A MATCH ANALYSIS
Part of interpreting the alarms is verifying the expected plant response based on those alarms. This question provides a plant situation where the operator is provided with indications of a loss of DC and part of the interpretation of the alarms is verifying why the reactor tripped and whether or not the EDG responded as expected based on those conditions.

ANSWER / DISTRACTOR ANALYSIS
A. Incorrect. Output breaker does not open. Plausible because feedwater isolation occurs, which causes a trip on lo-lo SG level.
B. Correct. Output breaker fails as-is. Feedwater isolation occurs, which causes a trip on lo-lo SG level.
C. Incorrect. Reactor will not trip on Hi Pzr P. Plausible because pressure will rise, due to the controlling channel of pressurizer pressure control failing to zero.
D. Incorrect. Reactor will not trip on Hi Pzr P. Plausible because bkr remains closed, thus distractor is partially correct.

REFERENCES
1. Vogtle Bank Question LO-LP-60329-02-09.
2. Vogtle Bank Question LO-LP-60329-02-10.
3. LO-LP-60329-06, Loss of 125V DC Power, Rev. 6, 02/28/2002.
4. 18034-1, Loss of Class 1E 125V DC Power, Rev. 7.1, 11/03/2003.
5. 17034-1, 125V DC SWGR 1AD1 TROUBLE, Rev. 16, 08/12/2004.

MCS	Time: 1	Points: 1.00	Version:	0 1 2 3 4 5 6 7 8 9			
			Answer:	B B A C C C D D A B	Scramble Range: A - D		
Tier:	1			Group:	1		
Key Word:	LOSS OF DC BUS			Cog Level:	C/A 3.3		
Source:	M			Exam:	VG05301		
Test:	R			Author/Reviewer:	MAB/RSB		

5. 058AA2.02 001

Unit 1 has the following conditions:

- Unit is at 100% power
- Diesel Generator '1A' is paralled with its safety bus for surveillance
- Pressurizer presure control is selected to 455/456
- Pressurizer level control is selected to 459/456

The crew notes that the following Main Control Room annunciators are received followed by an automatic reactor trip.

- 125V DC SWGR 1AD1 TROUBLE
- 125V DC MCC 1AD1M TROUBLE
- 125V DC PNL 1AD12 TROUBLE
- 120V AC PANELS 1AY1A 1AY2A TROUBLE
- INVERTERS 1AD1I1 1AD1I11 TROUBLE
- 125V DC PNL 1AD11 TROUBLE

Which ONE of the following correctly describes the plant response?

A. The reactor trips on Lo-Lo Steam Generator Level. Diesel Generator 1A output breaker opens.

B. The reactor trips on Lo-Lo Steam Generator Level. Diesel Generator 1A output breaker remains closed.

C. The reactor trips on Hi Pressurizer Pressure. Diesel Generator 1A output breaker opens.

D. The reactor trips on Hi Pressurizer Pressure. Diesel Generator 1A output breaker remains closed.

K/A
058 Loss of DC Power
AA2.02 Ability to determine and interpret the following as they apply to Loss of DC Power: 125 V dc bus voltage, low/critical low, alarm.

K/A MATCH ANALYSIS
Part of interpreting the alarms is verifying the expected plant response based on those alarms. This question provides a plant situation where the operator is provided with indications of a loss of DC and part of the interpretation of the alarms is verifying why the reactor tripped and whether or not the EDG responded as expected based on those conditions.

ANSWER / DISTRACTOR ANALYSIS
A. Incorrect. Output breaker does not open. Plausible because feedwater isolation occurs, which causes a trip on lo-lo SG level.
B. Correct. Output breaker fails as-is. Feedwater isolation occurs, which causes a trip on lo-lo SG level.
C. Incorrect. Reactor will not trip on Hi Pzr P. Plausible because pressure will rise, due to the controlling channel of pressurizer pressure control failing to zero.
D. Incorrect. Reactor will not trip on Hi Pzr P. Plausible because bkr remains closed, thus distractor is partially correct.

REFERENCES
1. Vogtle Bank Question LO-LP-60329-02-09.
2. Vogtle Bank Question LO-LP-60329-02-10.
3. LO-LP-60329-06, Loss of 125V DC Power, Rev. 6, 02/28/2002.
4. 18034-1, Loss of Class 1E 125V DC Power, Rev. 7.1, 11/03/2003.
5. 17034-1, 125V DC SWGR 1AD1 TROUBLE, Rev. 16, 08/12/2004.

MCS	Time: 1	Points: 1.00	Version:	0 1 2 3 4 5 6 7 8 9			
			Answer:	B B A C C C D D A B		Scramble Range: A - D	
Tier:	1			Group:	1		
Key Word:	LOSS OF DC BUS			Cog Level:	C/A 3.3		
Source:	M			Exam:	VG05301		
Test:	R			Author/Reviewer:	MAB/RSB		

WINDOW D01

ORIGIN	SETPOINT
1AD1 Prot Rly	Not Applicable

125V DC SWGR
1AD1 TROUBLE

1.0 PROBABLE CAUSE

1. One of the breakers on switchgear 1AD1 tripped.
2. Bus ground fault.
3. Bus undervoltage or loss of voltage.
4. Loss of control power.

2.0 AUTOMATIC ACTIONS

NONE

3.0 INITIAL OPERATOR ACTIONS

NONE

4.0 SUBSEQUENT OPERATOR ACTIONS

1. CHECK for associated alarms and indications.
2. If necessary, DISPATCH an operator to the switchgear to check for:
   a. Ground fault indications,
   b. Loss of control power, (Battery Charger shutdown with corresponding switchgear breaker open, or control power breakers open)
   c. Tripped breakers,
   d. Bus undervoltage or loss of voltage,
   e. Other abnormal conditions.
3. If the alarm is due to a breaker tripping on fault:
   a. DETERMINE what loads are affected,
   b. If necessary, DISPATCH an operator to the affected equipment to manually operate the breakers, under the direction of Control Room,
   c. NOTIFY Maintenance and RETURN affected equipment to service once the cause has been corrected.

LO-LP-60329-02-09

Given the following conditions/events:

* Unit 1 is at 100% power
* All control systems are in their normal alignment
* Pressurizer pressure control is selected to 455/456
* Pressurizer level control is selected to 459/456

The following Main Control room annunicators are received followed by an automatic reactor trip.

* "125V DC SWGR 1AD1 TROUBLE"
* "125 DC MCC 1AD1M TROUBLE"
* "125 DC PNL 1AD12 TROUBLE"
* "120V AC PANELS 1AY1A 1AY2A TROUBLE"
* "INVERTERS 1AD1I1 1AD1I11 TROUBLE"
* "125V DC PNL 1AD11 TROUBLE"

Which of the following conditions lead to the automatic reactor trip and what caused the trip?

A. Reactor tripped on Lo-Lo SG level when all 4 MSIV's, 4 Bypass MSIV's, 4 MFIV's, and 4 Bypass MFIV's closed.

B. Reactor tripped on Lo-Lo SG level when all 8 MSIV's, 8 Bypass MSIV's, 8 MFIV's, and 8 Bypass MFIV's closed.

C. Reactor tripped on High PZR Pressure when all 4 MSIV's, 4 Bypass MSIV's, 8 MFIV's, and 8 MFRV's closed.

D. Reactor tripped on High PZR Pressure when all 8 MSIV's, 8 Bypass MSIV's, 4 MFIV's, and 4 MFRV's closed.

LO-LP-60329-02

Given the appropriate drawings, logics, and/or procedures, describe how the plant will respond to a loss of the following 125V DC vital buses:

a. 1AD1
b. 1BD1
c. 1CD1
d. 1DD1

LO-LP-60329-02-10
Given the following conditions/events:

* Unit 1 is at 91% power
* All control systems are in their normal alignment
* Pressurizer pressure control is selected to 455/456
* Pressurizer level control is selected to 459/460

The following Main Control room annunicators are received followed by an automatic reactor trip:

* "125V DC SWGR 1AD1 TROUBLE"
* "125 DC MCC 1AD1M TROUBLE"
* "125 DC PNL 1AD12 TROUBLE"
* "120V AC PANELS 1AY1A 1AY2A TROUBLE"
* "INVERTERS 1AD1I1 1AD1I11 TROUBLE"
* "125V DC PNL 1AD11 TROUBLE"

Which of the following conditions caused the automatic reactor trip?

A. Lo-Lo SG Level

B. Low Pressurizer Pressure

C. High Pressurizer Level

D. High IR Neutron Flux Level

LO-LP-60329-02
Given the appropriate drawings, logics, and/or procedures, describe how the plant will respond to a loss of the following 125V DC vital buses:

a. 1AD1
b. 1BD1
c. 1CD1
d. 1DD1

Ref:
① LO-LP-60329, Loss of 125 VDC Power.doc

SOUTHERN COMPANY

Energy to Serve Your World℠

VOGTLE ELECTRIC GENERATING PLANT

TRAINING LESSON PLAN

TITLE:	**LOSS OF 125V DC POWER**	**NUMBER: LO-LP-60329-06**	
PROGRAM:	**LICENSED OPERATOR TRAINING**	REVISION:	06
SME:	F. HOWARD	DATE:	2/28/02
APPROVED:	**D. Scukanec**	DATE:	2/28/2002

INSTRUCTOR GUIDELINES:

I. FORMAT

A. Lecture with visual aids

II. MATERIALS

A. Overhead projector

B. Transparencies

C. White board with markers

III. EVALUATION

A. Written or oral exam in conjunction with other lesson plans

IV. REMARKS

A. The appropriate Plant Procedures will be provided to the students. After the lecture on Loss of 125 VDC Power Malfunctions, the student should be given adequate self-study time for learning the lesson plan objectives. Additionally, the student should review the appropriate plant procedure to learn how to perform the associated task(s). The instructor should direct self-study activities and be availabe to answer questions that may arise concerning the objectives or the procedures. After self-study, the student will perform, simulate, observe, or discuss (as identified on the cluster signoff criteria list) the task covered in the presence of an evaluator.

Licensed Operator Objectives for this lesson plan can be found in the Licensed Operator System Master Plan Section 2.3 (Qualification Signoff Criteria)

Cluster 60 INTEGRATED PLANT OPS - NORMAL EVENTS

REFERENCES:

1. PLANT VOGTLE PROCEDURES

   18034-1, LOSS OF CLASS 1E 125V DC POWER

2. TECHNICAL SPECIFICATIONS: 3.8.4, 3.8.5, 3.8.9, 3.8.10

3. VOGTLE TRAINING TEXT: NONE

4. PLANT MANUAL: NONE

5. DESIGN MANUAL: NONE

6. P&IDS, LOGICS, AND OTHER DRAWINGS: NONE

7. VENDOR MANUALS AND OTHER REFERENCES: NONE

8. FSAR: NONE

9. COMMITMENTS: NONE

10. TRANSPARENCIES:

    LO-TP-60329-001, LESSON OBJECTIVES

11. LICENSED OPERATOR TASKS:

    LO-TA-60040, RESPOND TO LOSS OF CLASS 1E 125VDC POWER

12. HANDOUTS: NONE

III. LESSON OUTLINE: NOTES

I. INTRODUCTION

A. This procedure provides the actions to be followed in the event that power is lost to one of the 125V DC vital busses

B. Present lesson objectives

II. PRESENTATION

A. Present this lesson using the latest revision of AOP 18034

B. Procedure consists of four subsections: **Objective 4**

1. **Loss of 125V DC Bus 1AD1**

a. Symptoms

1) Loss of 1AY1A and 1AY2A will be obvious to the operator due to all Channel I bistable lights lite up and sequencer trouble.

2) Loss of control power lights on 1AA02, 1AB04, 1AB05, and 1AB15.

3) Train A SLI

4) Train A FWI

5) Loss of voltage on 1AD1

2. **Loss of 125V DC Bus 1BD1**

a. Symptoms

1) Loss of 1BY1B and 1BY2B causing all Channel II bistable lights to lite and sequencer trouble alarm.

2) Loss of control power lights on 1BA03, 1BB06, 1BB07, and 1BB16.

3) Train B SLI

4) Train B FWI

5) Loss of Voltage on IBD1

3. **Loss of 125V DC Bus 1CD1**

   a. Symptoms

      1) Loss of 1CY1A causing all Channel III bistable lights to lite

      2) Loss of voltage on 1CD1.

      3) Loss of control and indication on TDAFW pump

4. **Loss of 125V DC Bus 1DD1**

   a. Symptoms

      1) Loss of 1DY1B causing all Channel IV bistable lights to lite.

      2) Loss of voltage to 1DD1.

C. Review the Attachment for each subsection prior to getting into the procedure steps — **Objective 1**

D. For Loss of 1AD1 and 1BD1, point out that the Equipment Responses are train related. Compare Attachment A with Attachment B

   1. If at power, auto Rx trip will probably Occur. If no Auto Rx Trip, then you're required to Manually trip reactor. This requires entry into 19000-C, Response to Rx Trip or SI. — Note: EOPs have priority over AOPs.

   2. Stress the loss of control power to all train related 4160 V and 480 V Switchgear breakers from remote switches.

      All must be opened and closed locally.

E. For Loss of 1CD1 and 1DD1, point out that the Equipment Responses are train related. Compare Attachment C with Attachment D

F. Present the procedure steps ensuring the class understands the steps and why each step is performed — **Objective 2**

G. Stress to the class that for a loss of 1AD1 or 1BD1 the control power is lost to the associated Diesel Generator Control Panel — **Objective 3**

   1. For a DG not running this renders the DG inoperable - No power to starting solenoids or engine and generator control.

2. For a DG that is running at the time of the loss of the DC vital bus

   a. The DG fails as is

   b. No electrical protective trips or breaker control power

   c. No frequency control or load control

      1) May drop or pick up load in parallel but will not trip electrically.

   d. No voltage control or VARS control in parallel.

      1) Will not trip output breaker even if overloaded.

   e. Power lost to the low speed relay

      1) Generator space heaters come on

      2) Engine lube oil and jacket water heaters come on

      3) Lube oil and jacket water keep-warm pumps come on

H. Stress to the class the effects on the TDAFW pump due to failure of 1CD1

   1. TDAFW pump mechanical trip and throttle valve 1-PV-15129 will fail as is with no control capability

   2. TDAFW pump speed governor valve 1-SV-15133 will fail full open

   3. Review Caution Statement at beginning of Subsection C Procedure Steps

      If TDAFW pump is not running, it can only be started by local manual operation using Attachment "E". If TDAFW pump is running, it may overspeed because speed governor valve 1-SV-15133 fails full open

III. SUMMARY

A. Review Objectives

1. **GIVEN THAT A LOSS OF POWER HAS OCCURRED TO ANY OF THE FOLLOWING 125 VDC VITAL BUSES AND GIVEN THE APPROPRIATE PLANT PROCEDURES, DESCRIBE THE OPERATOR ACTIONS REQUIRED AND WHY THESES ACTIONS ARE TAKEN.**

   a. 1AD1
   b. 1BC1
   c. 1CD1
   d. 1DD1

2. **GIVEN THE APPROPRIATE DRAWINGS, LOGICS, AND/OR PROCEDURES, DESCRIBE HOW THE PLANT WILL RESPOND TO A LOSS OF THE FOLLOWING 125 VDC VITAL BUSES:**

   a. 1AD1
   b. 1BD1
   c. 1CD1
   d. 1DD1

3. **DESCRIBE HOW A LOSS OF 125 VDC BUS 1AD1 OR 1BD1 WILL AFFECT THE ASSOCIATED TRAIN DIESEL GENERATOR WITH THE DIESEL:**

   a. RUNNING

      - Loss of frequency and load control
      - Loss of voltage and reactive load (VARS) control
      - Output breaker will not trip on any protective or switch position (Must be tripped locally.
      - Keep warm equipment will start due to deenergized 200 rpm speed relay.

   b. NOT RUNNING

      - Will not start
      - Is inoperable due to loss of power to starting solenoids and engine and output breaker controls.

4. **GIVEN CONDITIONS AND/OR INDICATIONS, DETERMINE THE REQUIRED AOP TO ENTER (INCLUDING SUBSECTIONS, AS APPLICABLE).**

   Loss of 125V DC Bus 1AD1

   a. Symptoms

      1) Loss of 1AY1A and 1AY2A will be obvious to the operator due to all Channel I bistable lights lite up and sequencer trouble.

      2) Loss of control power lights on 1AA02, 1AB04, 1AB05, and 1AB15.

3) Train A SLI

4) Train A FWI

5) Loss of voltage on 1AD1

Loss of 125V DC Bus 1BD1

a. Symptoms

1) Loss of 1BY1B and 1BY2B causing all Channel II bistable lights to lite and sequencer trouble alarm.

2) Loss of control power lights on 1BA03, 1BB06, 1BB07, and 1BB16.

3) Train B SLI

4) Train B FWI

5) Loss of Voltage on IBD1

Loss of 125V DC Bus 1CD1

a. Symptoms

1) Loss of 1CY1A causing all Channel III bistable lights to lite

2) Loss of voltage on 1CD1.

3) Loss of control and indication on TDAFW pump

Loss of 125V DC Bus 1DD1

a. Symptoms

1) Loss of 1DY1B causing all Channel IV bistable lights to lite.

2) Loss of voltage to 1DD1.

Note that PORV PV-455 and PV-456 are not controlled by the master controller. PORV PV-455 responds to the primary pressure channel selected by PS-455F, (either PT-455 or PT-457). PORV PV-455 opens at 2345 psig and closes at 2325 psig. PORV PV-456 uses the secondary channel, (either PT-456 or PT-458) selected by PS-455F. PORV PV-456 opens at 2335 psig and closes at 2315 psig. However, it is important to note that the pressurizer control components will always energize or de-energize at the controller outputs discussed above. The master controller is also selected to control from PT-455 or PT-457 using hand switch PS-455F.

The pressurizer spray valves have separate controllers, one for each valve. These "slave controllers" are a proportional only controller and receive input from the master controller. The MANUAL/AUTO stations are located on the QMCB. Pressurizer Spray Valves can also be controlled from Shutdown Panel "A".

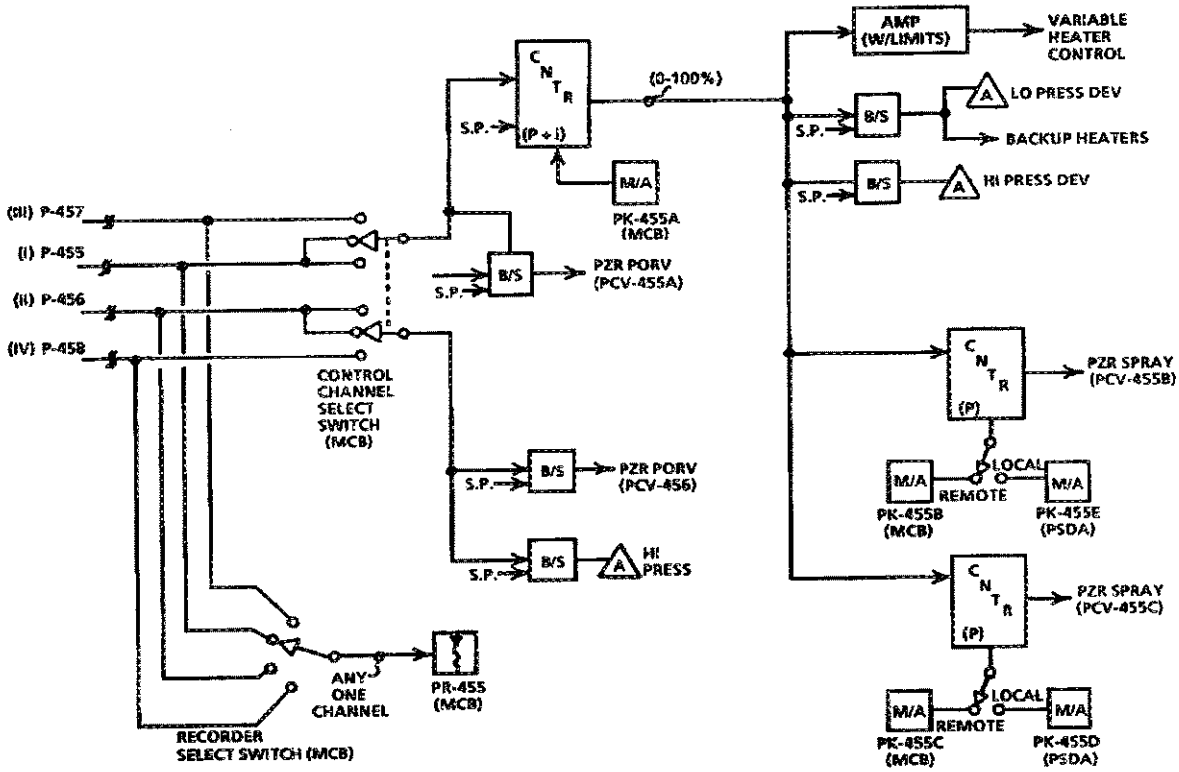

16-61 Pressurizer Pressure Protection System

The Pressurizer Pressure Protection System is designed to protect the pressurizer and RCS from overpressure and under pressure transients that the Pressurizer Pressure Control System is unable to correct.

The Pressurizer Pressure Protection System uses the same pressure channels as the Pressurizer Pressure Control System but is independent of the PS-455F. Pressurizer pressure information is supplied to the Reactor Protection System (RPS). The RPS will take appropriate safeguard actions to protect the plant when conditions warrant it. The RPS will not, however, take safeguard action based on one pressure channel. At least two channels must supply the same information before the RPS will act.

QUESTIONS REPORT
for Westinghouse 3 Loop Questions

1. 058AA2.02 001

Units 3 is in Mode 1 when Annunciator X1/1, DC LC 3A TROUBLE, alarms.

Which one of the following describes the consequences of a loss of Vital DC Bus 3A?

A.✓ Unit 3 reactor will automatically trip.
Train 1 AFW is inoperable.
Unit 3 Annunciators will lose power.

B. Unit 3 reactor will not automatically trip.
Train 2 AFW is inoperable.
Unit 3 Annunciators will maintain power.

C. Unit 3 reactor will not automatically trip.
Train 1 AFW is inoperable.
Unit 3 Annunciators will maintain power.

D. Unit 3 reactor will automatically trip.
Train 2 AFW is inoperable.
Unit 3 Annunciators will lose power.

A
REFERENCE:
3-ONOP-003.4, Section 3

MCS	Time: 1	Points: 1.00	Version:	0 1 2 3 4 5 6 7 8 9			
			Answer:	A B C D A B C D A B	Scramble Range: A - D		
RO Tier:					SRO Tier:	T1G2	
K/A Value:	3.3/3.6				Cog. Level:	C/A	
Source:	NEW				Exam:	TP00301	
Test:	SRO				Misc:	LRM/TP	

Larry tested plant response
to DC Trouble Alarms.

42. 059A4.12 001

If Train 'B' Reactor Trip Breaker fails to open on a reactor trip, which ONE of the following correctly states the effect this will have on the Low Tavg/P-4 Feedwater Isolation Signal as RCS temperature decreases?

A. No FWI signal will be generated when RCS temperature lowers to 564 °F.

B. Only Train A FWI signal will be generated and only two Main Feedwater Isolation Valves will close when RCS temperature lowers to 564 °F.

C. Both Train A and Train B FWI signals will be generated and all four Main Feedwater Isolation Valves will close when RCS temperature lowers to 564 °F.

D. Only Train A FWI signal will be generated and all four Main Feedwater Isolation Valves will close when RCS temperature lowers to 564 °F.

K/A
059 Main Feedwater
A4.12 Ability to manually operate and / or monitor in the control room: Initiation of automatic feedwater isolation.

K/A MATCH ANALYSIS
Part of monitoring is to correctly anticipate what is supposed to happen. Therefore, the K/A is matched because it tests the knowledge of how the FWI should respond when a RTB fails to open.

ANSWER / DISTRACTOR ANALYSIS
A. Incorrect. A Train FWIS is generated. Plausible because it may be a misconception that both trains of P-4 are needed for the FWIS.
B. Incorrect. All FWIVs close. Plausible because it may be a misconception that the A Train FWIS will isolate two loops of FW and the B Train will isolate the other two loops of FW.
C. Incorrect. RTB being open prevents a B Train FWIS. Plausible because all FWIVs do actually close even without the B Train FWIS.
D. Correct. P-4 is train-specific; however, a FWIS is generated and all FWIVs close when 564 °F is reached.

REFERENCES
1. Vogtle Bank Question, LO-LP-18201-07-09
2. Lesson Plan V-LO-TX-28101, RPS-SSPS-AMSAC, Rev. 3
3. Lesson Plan V-LO-TX-18201, Condensate and Feedwater Part 2, Rev. 2.0

MCS Time: 1 Points: 1.00 Version: 0 1 2 3 4 5 6 7 8 9
Answer: D B B C A D C D D B Scramble Range: A - D

QUESTIONS REPORT
for Voglte 2005-301 Draft

Tier:	2	Group:	1
Key Word:	FWI FEEDWATER ISOLAT	Cog Level:	MEM 3.4
Source:	B	Exam:	VG05301
Test:	R	Author/Reviewer:	MAB/RSB

42. 059A4.12 001

If Train 'B' Reactor Trip Breaker fails to open on a reactor trip, which ONE of the following correctly states the effect this will have on the Low Tavg/P-4 Feedwater Isolation Signal as RCS temperature decreases?

A. No FWI signal will be generated when RCS temperature lowers to 564 °F.

B. Only Train A FWI signal will be generated and only two Main Feedwater Isolation Valves will close when RCS temperature lowers to 564 °F.

C. Both Train A and Train B FWI signals will be generated and all four Main Feedwater Isolation Valves will close when RCS temperature lowers to 564 °F.

D. Only Train A FWI signal will be generated and all four Main Feedwater Isolation Valves will close when RCS temperature lowers to 564 °F.

K/A
059 Main Feedwater
A4.12 Ability to manually operate and / or monitor in the control room: Initiation of automatic feedwater isolation.

K/A MATCH ANALYSIS
Part of monitoring is to correctly anticipate what is supposed to happen. Therefore, the K/A is matched because it tests the knowledge of how the FWI should respond when a RTB fails to open.

ANSWER / DISTRACTOR ANALYSIS
A. Incorrect. A Train FWIS is generated. Plausible because it may be a misconception that both trains of P-4 are needed for the FWIS.
B. Incorrect. All FWIVs close. Plausible because it may be a misconception that the A Train FWIS will isolate two loops of FW and the B Train will isolate the other two loops of FW.
C. Incorrect. RTB being open prevents a B Train FWIS. Plausible because all FWIVs do actually close even without the B Train FWIS.
D. Correct. P-4 is train-specific; however, a FWIS is generated and all FWIVs close when 564 °F is reached.

REFERENCES
1. Vogtle Bank Question, LO-LP-18201-07-09
2. Lesson Plan V-LO-TX-28101, RPS-SSPS-AMSAC, Rev. 3
3. Lesson Plan V-LO-TX-18201, Condensate and Feedwater Part 2, Rev. 2.0

MCS Time: 1 Points: 1.00 Version: 0 1 2 3 4 5 6 7 8 9
Answer: D B B C A D C D D B Scramble Range: A - D

QUESTIONS REPORT
for Voglte 2005-301 Draft

Tier:	2	Group:	1
Key Word:	FWI FEEDWATER ISOLAT	Cog Level:	MEM 3.4
Source:	B	Exam:	VG05301
Test:	R	Author/Reviewer:	MAB/RSB

QUESTIONS REPORT
for Voglte 2005-301 Draft

1. 059A4.12 001

If Train 'B' Reactor Trip Breaker fails to open on a reactor trip, which ONE of the following correctly states the effect this will have on the Low Tavg/P-4 Feedwater Isolation Signal as RCS temperature decreases?

A. No FWI signal will be generated when RCS temperature lowers to 564 °F.

B. Only Train A FWI signal will be generated and only two Feedwater Isolation Valves will close when RCS temperature lowers to 564 °F.

C. Both Train A and Train B FWI signals will be generated and all Feedwater Isolation Valves will close when RCS temperature lowers to 564 °F.

D✓ Only Train A FWI signal will be generated and all Feedwater Isolation Valves will close when RCS temperature lowers to 564 °F.

K/A
059 Main Feedwater
A4.12 Ability to manually operate and / or monitor in the control room: Initiation of automatic feedwater isolation.

K/A MATCH ANALYSIS
Part of monitoring is to correctly anticipate what is supposed to happen. Therefore, the K/A is matched because it tests the knowledge of how the FWI should respond when a RTB fails to open.

ANSWER / DISTRACTOR ANALYSIS
A. Incorrect. A Train FWIS is generated. Plausible because it may be a misconception that both trains of P-4 are needed for the FWIS.
B. Incorrect. All FWIVs close. Plausible because it may be a misconception that the A Train FWIS will isolate two loops of FW and the B Train will isolate the other two loops of FW.
C. Incorrect. RTB being open prevents a B Train FWIS. Plausible because all FWIVs do actually close even without the B Train FWIS.
D. Correct. P-4 is train-specific; however, a FWIS is generated and all FWIVs close when 564 °F is reached.

REFERENCES
1. Vogtle Bank Question, LO-LP-18201-07-09
2. Lesson Plan V-LO-TX-28101, RPS-SSPS-AMSAC, Rev. 3
3. Lesson Plan V-LO-TX-18201, Condensate and Feedwater Part 2, Rev. 2.0

MCS Time: 1 Points: 1.00 Version: 0 1 2 3 4 5 6 7 8 9
Answer: D B B C A D C D D B Scramble Range: A - D

QUESTIONS REPORT
for Voglte 2005-301 Draft

Tier:	2	Group:	1
Key Word:	FWI FEEDWATER ISOLAT	Cog Level:	MEM 3.4
Source:	B	Exam:	VG05301
Test:	R	Author/Reviewer:	MAB/RSB

SECTION B

REACTOR TRIP AND ESFAS SIGNALS

28.11 PERMISSIVE INTERLOCKS

Permissive interlocks provide input to the protection systems to allow or prevent protective functions from occurring under certain plant conditions.

P-4 **Indicates reactor tripped**

Set point or conditions that give P-4

RTA and its bypass (BYA) both open give P-4 Train A
RTB and its bypass (BYB) both open give P-4 Train B

Function:

1) **Trips** the Main Turbine to limit the RCS cool down
   - P-4 Train A generates a "Mechanical Turbine Trip"
   - P-4 Train B generates an "Electrical Turbine Trip"
2) Steam Dumps
   - P-4 Train A generates a Steam Dump Arming signal
   - P-4 Train B transfers Steam Dump controllers from "Load reject" mode to the "Plant trip" mode
3) **F**eed **W**ater **I**solation (FWI)
   - P-4 in conjunction with Lo Tavg of 564°F
4) Seals in FWI if caused by a Safety Injection or Hi-Hi Steam Generator water level (P-14).
5) SI reset logic
   - After Safety Injection has been reset, P-4 blocks any future automatic safety injection signals.

P-6 **Source Range Block Permissive**

Set point:

2.0 x 10-5% POWER on any **1 / 2** IR NIS detector.

Function:

1) Allows the operator to manually block SR high flux trip.
   (both TRN A and TRN B switches, QMCB-C)
2) Loss of P-6 (either train no SSPS) will automatically unblock the Source Range Trip Permissive status light on BPLP (QMCB-C) Illuminates when P-6 is present.

20) Reactor cavity and aux containment coolers supply and return valves receive close signals.
21) Non 1E buses 1NB01 and 1NB10 load shed (Stub Buses)

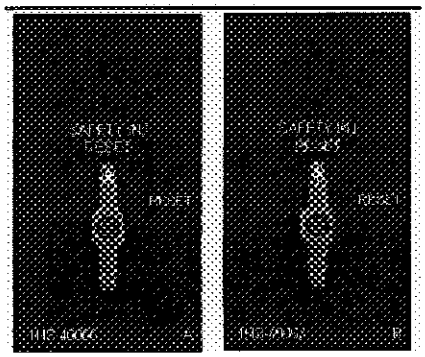

Safety Injection Reset and Block

Safety Injection signals can be reset even if the actuation signal is still present if the following is satisfied:

1) 60 seconds has past since the actuation (Timer TD-1 on both trains of SSPS)

2) Both trains P-4 must be present to seal in the reset signal. (prevents subsequent re-actuation if initiating signal is still present or from another automatic actuation signal)

3) Reset SI by using both "A" and "B" train SI reset hand switches (1 for each train of SSPS) Located on the Main Control Board "C panel"

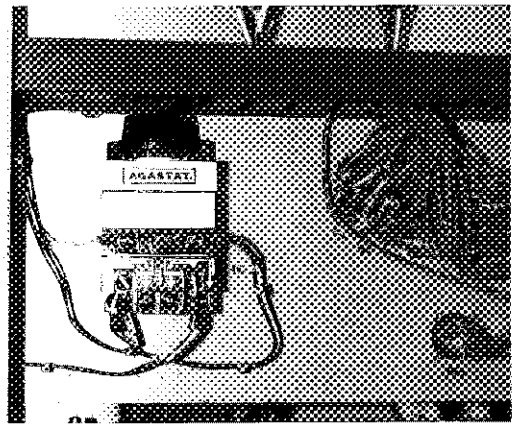

When the Safety Injection is reset no equipment changes status. The reset only allows the operator to secure equipment auto started by the actuation.

Feed Water Isolation (FWI)

Purpose:

Isolates feed water to the Steam Generators to prevent rapid cool down of the reactor coolant system also prevents overfilling the steam generators and introduction of water in the steam lines and main turbine.

FWI Actuation Signals

1) P-4 (Reactor Trip) Lo Tavg 564°F on **2** out of **4** Loops

2) **S**afety **I**njection (also trips Main Feed Pumps and the Main Turbine)

3) P-14 Hi-Hi Steam Generator Level ≥ 86 % on **2** out of **4** channels in **1** out of **4** S/Gs (also trips Main Feed Pumps and the Main Turbine)

Equipment affected by the Feed Water Isolation signal

1) Main Feed Water Isolation Valves receive close signals

2) Bypass Feed Water Isolation Valves receive close signals

3) Main Feed Water Regulating Valves receive close signals *

4) Bypass Feed Water Regulating Valves receive close signals *

*** Both the Main and Bypass Feed Water Regulating Valves are unique in the fact that they require a FWI actuation signal from both SSPS trains to auto close. This is due to the two trains of instrument air solenoid valves being arranged in parallel. The parallel arrangement minimizes the chance of inadvertent feed water isolation on a single solenoid failure.**

Resetting Feed Water Isolation

Depending on what caused the feed water isolation will determine the method in which it can be reset.

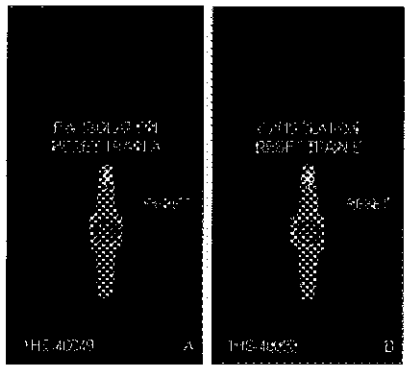

Feed Water Isolation due to Lo Tavg / reactor trip can be reset simply by the use of the "Feed Water Isolation Reset" switches. (one hand switch for each train of SSPS).

Feed Water Isolation due to SI or P-14 (a.k.a. Full FWI) is different.

1) The actuation signal must be reset or clear

2) The P-4 seal in must be taken away. This is performed by what is know as cycling the reactor trip breakers (Closing the reactor trip breakers and allowing them to re-open) Caution: If the FWI is due to a Safety Injection the actuation signal must be cleared before cycling the trip breakers. If not Safety Injection actuation will re-occur due to the auto SI block being removed.

3) Reset FWI using the "FWI Reset" Hand Switches

Main Steam Line Isolation (MSLI)

Purposes: 1) Prevents excessive cool down of the RCS for main steam line breaks down stream of the isolation valves.

2) Limits the blow down to the affected faulted steam generator this limits the cool down of the RCS and limits the amount of containment pressurization.

Technical Specification bases to prevent excessive Primary cooldown by limiting secondary depressurization due to faulted condition.

Feed Water Isolation on LO Tavg coincidence with Reactor Trip

Every time the Reactor trips and primary temperature lowers to 564°F the Main Feed Water lines isolate. The Auxiliary Feed Water System will supply the Steam Generators. The logic used to perform this action is:

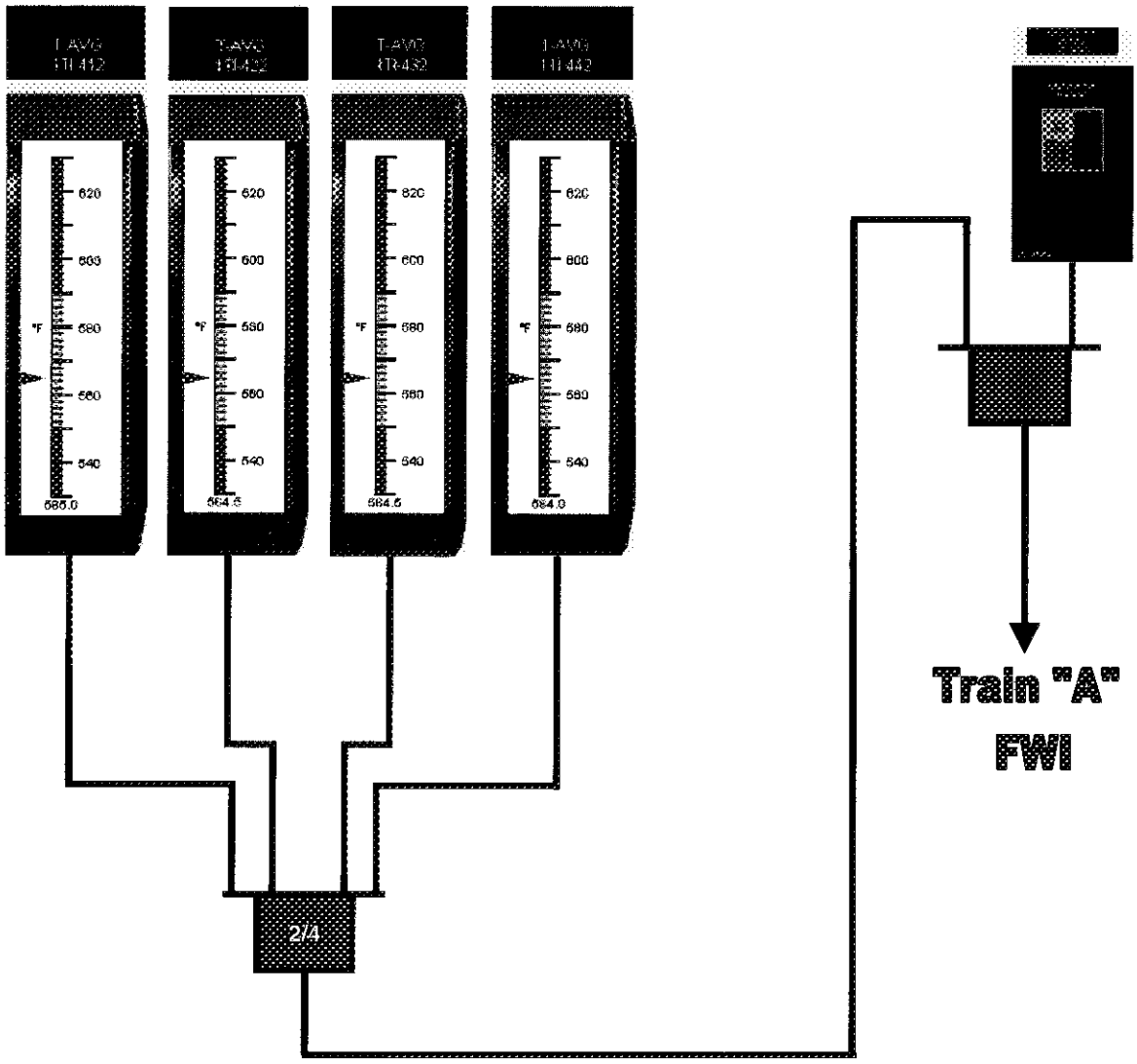

The **Train "B"** Feed Water Isolation signal would function the same way. **In addition, another important point is only the Main &**

Bypass Feed Water Isolation Valves and the Main & Bypass Feed Water Regulating Valves will close due to this signal.

Operating Tip

- **Following a Reactor Trip, Main Feed Water to the Steam Generators will be isolated. The flowpath now for the Condensate Pumps will be through the "Steam Jet Air Ejector Miniflow" line. This allows the plant to maintain Main Condenser vacuum.**

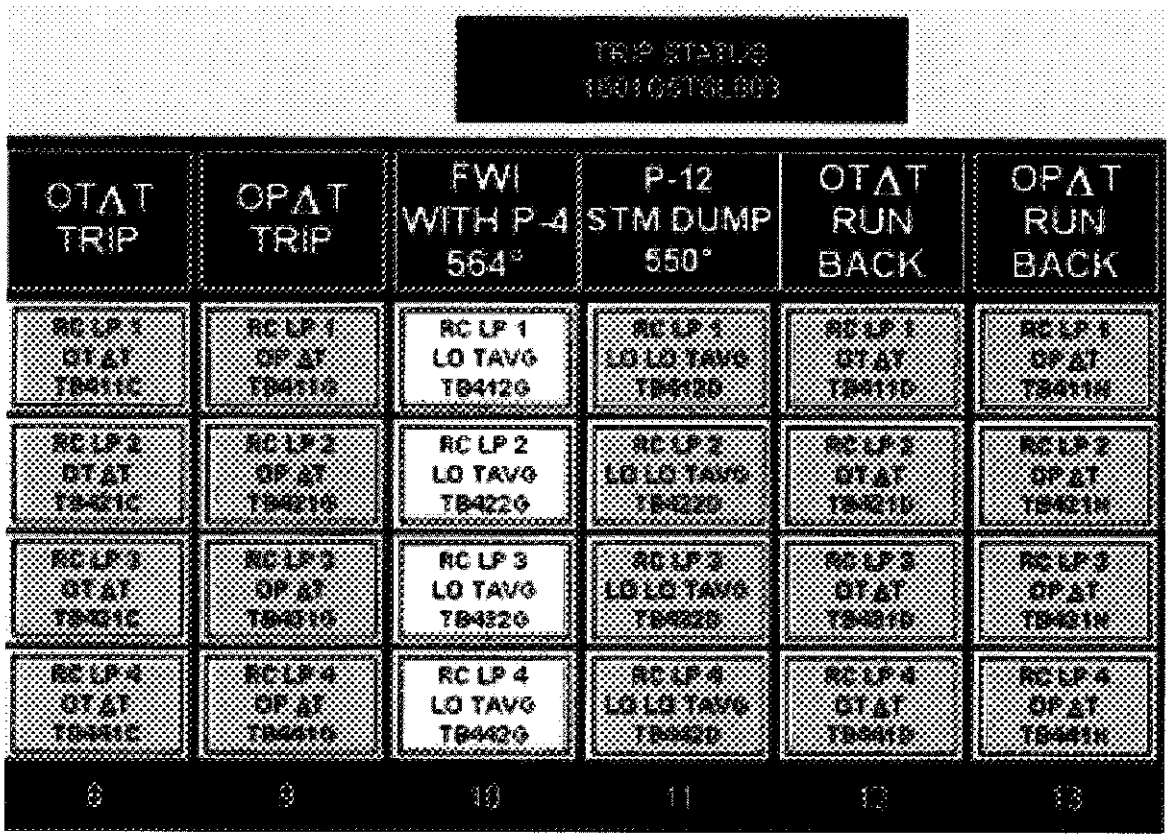

The Trip Status lights above would alert the operators when 2/4 narrow range temperature instruments are below 564°F.

CHAPTER 18

CONDENSATE AND FEED WATER SYSTEM

PART 2

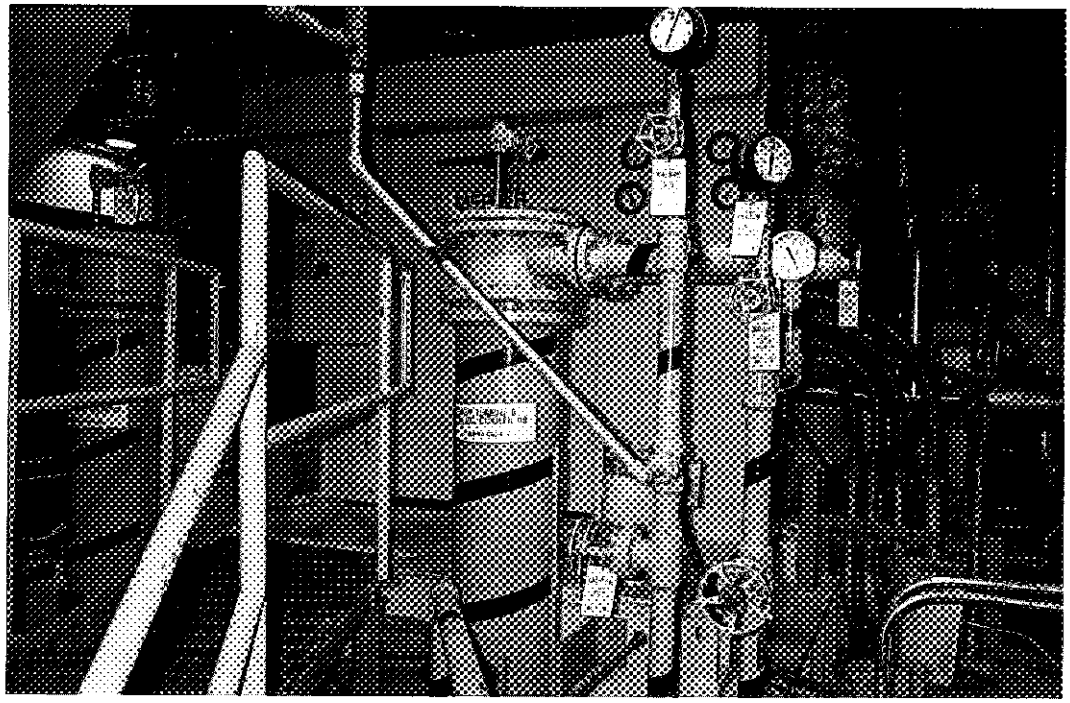

LO-LP-18201-07-09

A reactor trip has occurred on Unit 2. However, the Train B Reactor Trip Breaker failed to open. As RCS temperature decreases, what affect will the Train B Reactor Trip Breaker have on the Low Tavg/P-4 FWI signal ?

A. No FWI signal will be generated when RCS temperature lowers to 564 degrees F.

B. Only Train A FWI signal will be generated and only the Feedwater Isolation Valves for loops 1 and 4 will close when RCS temperature lowers to 564 degrees F.

C. Both Train A and Train B FWI signals will be generated and all Feedwater Isolation Valves will close when RCS temperature lowers to 564 degrees F.

D. Only Train A FWI signal will be generated and all Feedwater Isolation Valves will close when RCS temperature lowers to 564 degrees F.

43. 059K3.03 001

Given the following Unit 1 conditions:

- Control rods are in manual
- Reactor Power is at 50% Rated Thermal Power with all secondary control systems in automatic.
- FT-512 (#1 SG Controlling Steam Flow) is selected and fails high.

Which ONE of the following correctly describes the effects of the failure assuming no operator action?

A. ✓ Initially #1 FRV opens and #1 SG level rises rapidly. Main Feedwater Pump speed increases.

B. Initially #1 FRV opens and #1 SG level rises rapidly. Main Feedwater Pump speed decreases.

C. Initially #1 FRV closes and #1 SG level lowers rapidly. Main Feedwater Pump speed increases.

D. Initially #1 FRV closes and #1 SG level lowers rapidly. Main Feedwater Pump speed decreases.

K/A
059 Main Feedwater
K3.03 Knowledge of the effect that a loss or malfunction of the MFW will have on the following: S/Gs.

K/A MATCH ANALYSIS
Main feedwater is affected by the steam flow transmitter failure, which affects the SG level. Therefore, the question tests knowledge of a MFW failure and the effect it has on SGs.

ANSWER / DISTRACTOR ANALYSIS
A. Correct. Initially feed flow will try to match steam flow, which will cause #1 FRV to open. The steam flow is an input to the MFW Pump speed controller and will cause the speed to increase to maintain programmed dP.
B. Incorrect. MFWP speed increases. Plausible because #1 FRV does open.
C. Incorrect. #1 FRV opens due to the failure. Plausible because MFWP speed increases.
D. Incorrect. #1 FRV opens due to the failure. MFWP speed increases. Plausible because there is a high SG level which may lead applicant to believe that MFWP speed will lower.

REFERENCES
1. Vogtle Exam Bank Question LO-LP-21101-07-04.
2. Vogtle Simulator Malfunction Guide SG05.

MCS	Time:	1	Points:	1.00	Version:	0 1 2 3 4 5 6 7 8 9	
					Answer:	A A A B B A D D A A	Scramble Range: A - D
Tier:		2			Group:	1	
Key Word:		SG STEAM GENERATOR			Cog Level:	C/A 3.5	
Source:		M			Exam:	VG05301	
Test:		R			Author/Reviewer:	MAB/RSB	

43. 059K3.03 001

Given the following Unit 1 conditions:
- Control rods are in manual.
- Reactor Power is at 75% Rated Thermal Power with all secondary control systems in automatic.
- FT-512 (#1 SG Controlling Steam Flow) is selected and fails high.

Which ONE of the following correctly describes the effects of the failure assuming no operator action?

A. Initially #1 FRV opens and #1 SG level rises rapidly. Main Feedwater Pump speed increases.

B. Initially #1 FRV opens and #1 SG level rises rapidly. Main Feedwater Pump speed decreases.

C. Initially #1 FRV closes and #1 SG level lowers rapidly. Main Feedwater Pump speed increases.

D. Initially #1 FRV closes and #1 SG level lowers rapidly. Main Feedwater Pump speed decreases.

K/A
059 Main Feedwater
K3.03 Knowledge of the effect that a loss or malfunction of the MFW will have on the following: S/Gs.

K/A MATCH ANALYSIS
Main feedwater is affected by the steam flow transmitter failure, which affects the SG level. Therefore, the question tests knowledge of a MFW failure and the effect it has on SGs.

ANSWER / DISTRACTOR ANALYSIS
A. Correct. Initially feed flow will try to match steam flow, which will cause #1 FRV to open. The steam flow is an input to the MFW Pump speed controller and will cause the speed to increase to maintain programmed dP.
B. Incorrect. MFWP speed increases. Plausible because #1 FRV does open.
C. Incorrect. #1 FRV opens due to the failure. Plausible because MFWP speed increases.
D. Incorrect. #1 FRV opens due to the failure. MFWP speed increases. Plausible because there is a high SG level which may lead applicant to believe that MFWP speed will lower.

REFERENCES
1. Vogtle Exam Bank Question LO-LP-21101-07-04.
2. Vogtle Simulator Malfunction Guide SG05.

MCS	Time: 1	Points: 1.00	Version:	0 1 2 3 4 5 6 7 8 9			
			Answer:	A A A B B A D D A A		Scramble Range: A - D	
Tier:	2			Group:	1		
Key Word:	SG STEAM GENERATOR			Cog Level:	C/A 3.5		
Source:	M			Exam:	VG05301		
Test:	R			Author/Reviewer:	MAB/RSB		

QUESTIONS REPORT
for Vogtle 2005-301 Draft

1. 059K3.03 001

Given the following Unit 1 conditions:

- Reactor Power is at 75% Rated Thermal Power with all control systems in automatic.
- FT-512 (#1 SG Controlling Steam Flow) is selected and fails high.

Which ONE of the following correctly describes the effects of the failure? assuming no operator action.

A. Initially #1 FRV opens and #1 SG level rises rapidly. #2, 3, and 4 FRVs are closed further than their pre-failure position.

B. Initially #1 FRV opens and #1 SG level rises rapidly. #2, 3, and 4 FRVs are opened further than their pre-failure position.

C. Initially #1 FRV closes and #1 SG level lowers rapidly. #2, 3, and 4 FRVs are closed further than their pre-failure position.

D. Initially #1 FRV closes and #1 SG level lowers rapidly. #2, 3, and 4 FRVs are opened further than their pre-failure position.

K/A
059 Main Feedwater
K3.03 Knowledge of the effect that a loss or malfunction of the MFW will have on the following: S/Gs.

K/A MATCH ANALYSIS
Main feedwater is affected by the steam flow transmitter failure, which affects the SG level. Therefore, the question tests knowledge of a MFW failure and the effect it has on SGs.

ANSWER / DISTRACTOR ANALYSIS
A. Correct. Initially feed flow will try to match steam flow, which will cause #1 FRV to open. The steam flow is an input to the MFW Pump speed controller and will cause the speed to increase to maintain programmed dP. The increased feed flow will cause the levels in the other SGs to increase, which will eventually cause their MFRVs to throttle closed to maintain level in those generators; therefore, the levels in the other three SGs will be at a slightly elevated level (I.E. 67%) for a short period of time.
B. Incorrect. #2, 3, and 4 FRVs will be further closed (see 'A' analysis). Plausible because it may be logical to assume that the valves opened to cause the higher SG levels.
C. Incorrect. #1 FRV opens due to the failure. Plausible because it may be logical for applicants to think that the #1 FRV would close due to a rising SG level (particularly if applicant confuses actual and indicated steam flow and thinks that swell may be taking place).
D. Incorrect. #1 FRV opens due to the failure. Plausibility the same as 'C' above.

REFERENCES
1. Vogtle Exam Bank Question LO-LP-21101-07-04.
2. Vogtle Simulator Malfunction Guide SG05.

MCS	Time:	1	Points:	1.00	Version:	0	1	2	3	4	5	6	7	8	9								
					Answer:	A	A	A	B	B	A	D	D	A	A	Scramble Range: A - D							

Tier:	2	Group:	1
Key Word:	SG STEAM GENERATOR	Cog Level:	C/A 3.5
Source:	M	Exam:	VG05301
Test:	R	Author/Reviewer:	MAB/RSB

INSTRUCTOR STATION NO: SG05

I RIPTION: Steam Flow Transmitter Fails

Variable: 0-100% of scale

SG05a - FT 512 SG05c - FT 532
SG05b - FT 522 SG05d - FT 542

SOFTWARE NAME(s):	Logicals	Severitys
512 :	YP:XMFTB(334)	YPXSVRTY(85)
522 :	YP:XMFTB(335)	YPXSVRTY(86)
532 :	YP:XMFTB(336)	YPXSVRTY(87)
542 :	YP:XMFTB(337)	YPXSVRTY(88)

CAUSE: Transmitter Failure

PLANT STATUS: 90% power

EFFECTS:

With the affected transmitter selected for control, an increasing output will cause a steam flow greater than feed flow alarm. This increasing steam flow signal will also cause the feedwater main valve to open wider to increase feed flow. This steam flow is also input to the feedwater pumps speed controller, where it will cause the feedwater pumps speed to increase to maintain a programmed DP. The increased feed flow will cause the levels in the other steam generators to increase, which will throttle down their feedwater main valves to maintain their program level.

Steam generator level increases in response to the increased feed flow until it algebraically offsets the erroneous steam flow signal; this may be above the high level turbine trip setpoint.

If transmitter output is decreasing, this will generate a feed flow greater than steam flow alarm. The effects of a decreasing transmitter output will be the opposite of those described above. With this failure, the affected steam generator will generate a low-low water level reactor trip and start the auxiliary feedwater pumps.

Steam generator level responds to the change in feed flow until it nullifies the erroneous steam flow signal, or a trip level is reached, or until the operator takes corrective action.

The operator can control this transient by placing the feedwater pumps speed controller and feedwater main valves in manual or by switching to the other controlling channel.

Malfunction removal will cause the transmitter output to return to normal.

LO-LP-21101-07-04

Given the following plant conditions/events:

* The unit is operating at 75% power with all control systems in AUTO.
* #1 SG level begins to increase at a rapid rate.
* The BOP notes that the main feedwater regulating valve for #1 SG is going OPEN and the other 3 main feedwater regulating valves are going CLOSED.
* Level in each of #2, #3, and #4 SGs has increased to approximately 67%.

What is the most likely cause of this transient?

A. PT505 (1st stage turbine pressure) failed high.

B. FT512 (#1 SG controlling steam flow) failed high.

C. FT510 (#1 SG controlling feed flow) failed high.

D. LT551 (#1 SG controlling level) failed low.

LO-LP-21101-07

Describe the usage of the SG instrumentation signals (level and steam flow)

44. 061A2.08 001

The following Unit 1 conditions exist:

- The reactor has tripped
- E-0, Reactor Trip or Safety Injection, is being performed (Operators are at Step 19, verifying adequate AFW flow)
- Containment radiation levels are $2x10^5$ Rad/hr
- Containment pressure is 3.0 psig
- The "A" motor driven AFW pump is tagged out for maintenance
- The "B" motor driven AFW pump is operating with its discharge valves full open
- The turbine driven AFW pump failed to automatically start and operators have not yet attempted a manual start
- All steam generator narrow range levels are 29% and slowly going down
- Total AFW flow is 550 gpm

NR

Which ONE of the following correctly states the RO's required procedural action to address the above secondary heat removal issues?

A. Trip all RCPs.

B. Start the TDAFW pump.

C. Start the TDAFW pump when SG levels reach 10% NR.

D. Commence RCS feed and bleed.

K/A
061 Auxiliary/Emergency Feedwater
A2.08 Ability to (a) predict the impacts of the following malfunctions or operations on the AFW; and (b) based on those predictions, use procedures to correct, control, or mitigate the consequences of those malfunctions or operations: Flow rate expected from various combinations of AFW pump discharge valves.

K/A MATCH ANALYSIS
A malfunction exists because the AFW flow is less than expected for one MDAFW pump with discharge valves full open. The operator must take procedural action to correct the lowering SG levels.

ANSWER / DISTRACTOR ANALYSIS
A. Incorrect. Conditions for tripping RCPs not yet met. Plausible because FR-H.1 does have actions for tripping RCPs when heat sink problems are present.
B. Correct. E-0 requires that the TDAFW pump be started under these conditions (see Step 19).
C. Incorrect. Plausible because the TDAFW pump does need to be started, but the conditions for starting it are currently met.
D. Incorrect. SG WR level conditions must be less than 44% in 3 SGs to go to feed and bleed. Plausible because applicant could confuse requirements for WR and NR levels.

REFERENCES
1. 19000-C, E-0, Reactor Trip or Safety Injection, Rev. 29, 6/25/2004.
2. 19231-C, FR-H.1 Response to Loss of Secondary Heat Sink, Rev. 26.5, 4/14/2003.
3. 19235-C, FR-H.5 Response to SG Low Level, Rev. 9.1, 8/28/2000.
4. LO-LP-37002-14-C, Format and Use of EOP's, Rev. 14, 12/31/2002 (provided for verification of containment adverse number requirements).

MCS	Time:	1	Points:	1.00	Version:	0 1 2 3 4 5 6 7 8 9	
					Answer:	B A C B C D C D C B	Scramble Range: A - D
Tier:		2			Group:	1	
Key Word:		AFW DISCHARGE VALVE			Cog Level:	C/A 2.7	
Source:		N			Exam:	VG05301	
Test:		R			Author/Reviewer:	MAB/RSB	

44. 061A2.08 001

The following Unit 1 conditions exist:

- The reactor has tripped
- E-0, Reactor Trip or Safety Injection, is being performed (Operators are at Step 19, verifying adequate AFW flow)
- Containment radiation levels are $2x10^5$ Rad/hr
- Containment pressure is 3.0 psig
- The "A" motor driven AFW pump is tagged out for maintenance
- The "B" motor driven AFW pump is operating with its discharge valves full open
- The turbine driven AFW pump failed to automatically start and operators have not yet attempted a manual start
- All steam generator narrow range levels are 29% and slowly going down
- Total AFW flow is 550 gpm

Which ONE of the following correctly states the RO's required procedural action to address the above secondary heat removal issues?

A. Trip all RCPs.

B. Start the TDAFW pump.

C. Start the TDAFW pump when SG levels reach 10% NR.

D. Commence RCS feed and bleed.

K/A
061 Auxiliary/Emergency Feedwater
A2.08 Ability to (a) predict the impacts of the following malfunctions or operations on the AFW; and (b) based on those predictions, use procedures to correct, control, or mitigate the consequences of those malfunctions or operations: Flow rate expected from various combinations of AFW pump discharge valves.

K/A MATCH ANALYSIS
A malfunction exists because the AFW flow is less than expected for one MDAFW pump with discharge valves full open. The operator must take procedural action to correct the lowering SG levels.

ANSWER / DISTRACTOR ANALYSIS
A. Incorrect. Conditions for tripping RCPs not yet met. Plausible because FR-H.1 does have actions for tripping RCPs when heat sink problems are present.
B. Correct. E-0 requires that the TDAFW pump be started under these conditions (see Step 19).
C. Incorrect. Plausible because the TDAFW pump does need to be started, but the conditions for starting it are currently met.
D. Incorrect. SG WR level conditions must be less than 44% in 3 SGs to go to feed and bleed. Plausible because applicant could confuse requirements for WR and NR levels.

REFERENCES
1. 19000-C, E-0, Reactor Trip or Safety Injection, Rev. 29, 6/25/2004.
2. 19231-C, FR-H.1 Response to Loss of Secondary Heat Sink, Rev. 26.5, 4/14/2003.
3. 19235-C, FR-H.5 Response to SG Low Level, Rev. 9.1, 8/28/2000.
4. LO-LP-37002-14-C, Format and Use of EOP's, Rev. 14, 12/31/2002 (provided for verification of containment adverse number requirements).

MCS Time: 1 Points: 1.00 Version: 0 1 2 3 4 5 6 7 8 9
Answer: B A C B C D C D C B Scramble Range: A - D

Tier:	2	Group:	1
Key Word:	AFW DISCHARGE VALVE	Cog Level:	C/A 2.7
Source:	N	Exam:	VG05301
Test:	R	Author/Reviewer:	MAB/RSB

2. 061A2.08 001

The following Unit 1 conditions exist:

- The reactor has tripped ~~& SI was actuated~~
- E-0, Reactor Trip or Safety Injection, is being performed (Operators are at Step 19, verifying adequate AFW flow)
- Containment radiation levels are $2x10^5$ Rad/hr
- Containment pressure is 3.0 psig
- The "A" motor driven AFW pump is tagged out for maintenance
- The "B" motor driven AFW pump is operating with its discharge valve full open
- The turbine driven AFW pump failed to automatically start and operators have not yet attempted a manual start
- All steam generator narrow range levels are 29% and slowly going down
- Total AFW flow is 550 gpm

Which ONE of the following correctly states the RO's required procedural action to address the above secondary heat removal issues?

A. Trip all RCPs.

B. Immediately start the TDAFW pump.

C. Start the TDAFW pump when SG levels reach 10% NR.

D. Immediately commence RCS feed and bleed.

K/A
061 Auxiliary/Emergency Feedwater
A2.08 Ability to (a) predict the impacts of the following malfunctions or operations on the AFW; and (b) based on those predictions, use procedures to correct, control, or mitigate the consequences of those malfunctions or operations: Flow rate expected from various combinations of AFW pump discharge valves.

K/A MATCH ANALYSIS
A malfunction exists because the AFW flow is less than expected for one MDAFW pump with discharge valves full open. The operator must take procedural action to correct the lowering SG levels.

ANSWER / DISTRACTOR ANALYSIS
A. Incorrect. Conditions for tripping RCPs not yet met. Plausible because FR-H.1 does have actions for tripping RCPs when heat sink problems are present.
B. Correct. E-0 requires that the TDAFW pump be started under these conditions (see Step 19).
C. Incorrect. Plausible because the TDAFW pump does need to be started, but the conditions for starting it are currently met.
D. Incorrect. SG WR level conditions must be less than 44% in 3 SGs to go to feed and bleed. Plausible because applicant could confuse requirements for WR and NR levels.

REFERENCES
1. 19000-C, E-0, Reactor Trip or Safety Injection, Rev. 29, 6/25/2004.
2. 19231-C, FR-H.1 Response to Loss of Secondary Heat Sink, Rev. 26.5, 4/14/2003.
3. 19235-C, FR-H.5 Response to SG Low Level, Rev. 9.1, 8/28/2000.
4. LO-LP-37002-14-C, Format and Use of EOP's, Rev. 14, 12/31/2002 (provided for verification of containment adverse number requirements).

MCS	Time: 1	Points: 1.00	Version:	0 1 2 3 4 5 6 7 8 9	
			Answer:	B A C B C D C D C B	Scramble Range: A - D
Tier:	2		Group:	1	
Key Word:	AFW DISCHARGE VALVE		Cog Level:	C/A 2.7	
Source:	N		Exam:	VG05301	
Test:	R		Author/Reviewer:	MAB/RSB	

VOGTLE ELECTRIC GENERATING PLANT

TRAINING LESSON PLAN

TITLE:	Format And Use Of EOP's	NUMBER:	LO-LP-37002-14-C
PROGRAM:	Licensed Operator	REVISION:	14
SME:	Perry Tucker	DATE:	September 4, 2002
APPROVED:	D. Scukanec	DATE:	12/31/2002

INSTRUCTOR GUIDELINES:

I. LESSON FORMAT

A. Verbal lecture with visual aids

II. MATERIALS

A. Overhead projector

B. Transparencies

C. White board with markers

III. EVALUATION

A. Oral or written exam in conjunction with other lesson plans

IV. REMARKS

A. Ensure students have latest revision of EOP

B. Performance-based instructional units (IUs) are attached to the lesson plan as student handouts. After the lecture on Format and Use of EOP's, the student should be given adequate self-study time for the IUs. The instructor should direct self-study activities and be available to answer questions that may arise concerning the IU material. After self-study, the student will perform, simulate, observe, or discuss (as identified on the cluster signoff criteria list) the task covered in the instructional unit in the presence of an evaluator.

only be started, not completed to begin next step

a) Step must eventually be completed even if procedure is left, but not necessarily before the procedure is left — Objective 2

b) If step must be completed prior to proceeding, the step or an associated note will state the requirement

c) USS has responsibility to ensure all steps started are eventually completed

d) Continuous actions steps are identified in the EOPs (not all cases) by use of an asterisk (*) — Objective 4

e) The asterisk immediately precedes the AER step number (or RNO number if there is one).

f) Only the high level step number is marked indicating that there is a continuous action in the AER or RNO text, the associated Note or Caution.

g) Continuous Action steps may be marked in AOPs if desired

h) Continuous action steps are required to be performed as many times as necessary

(1) "CONTROL", "MAINTAIN", "LIMIT", "MATCH" and "MONITOR" steps

(2) "TRY to restore....."

(3) "IF, ... THEN", and "WHEN, ... THEN", are also "Conditional Steps"

(a) Conditional steps are used to express combinations of conditions and actions

(4) C.A.S. are no longer applicable when exiting a procedure unless restated in the next procedure entered.

4) Adverse containment condition alternate — Objective 5

parameters designated by parenthesis

Apply when: IEB 79.021

a) Containment pressure greater than Hi 1 setpoint (3.8 psig), or equal to 10^5 rad/hr, or integrated dose to 10^6 RAD (adverse cnmt parameters)

No longer apply if:

a) Containment pressure drops below 3.8 psig

b) Containment radiation drops less than 10^5 rad/hr if integrated dose less than 10^6 R

3. Notes and cautions — Objective 1c, d

a. Notes contain administrative or advisory information which supports operator action

b. Cautions

1) Contain information about potential hazards to personnel or equipment

2) Advise on actions or transitions which may become necessary depending on changes in plant conditions — Objective 3

c. Layout

1) Spread across entire page

2) If more than one is present each will be designated by bullets

d. Notes and cautions generally apply only to the step they precede

e. Notes and cautions stated before Step 1 of procedure are applicable to entire procedure

f. Notes and Cautions may contain continuous action steps

4. Foldout page — Objective 1e

a. Presents actions/transitions applicable at any step in the procedure (i.e., continuous action) — LO-TP-37002-006

b. Must be kept visible to the operator when the procedure is in use

EMERGENCY OPERATING PROCEDURE

E-0 REACTOR TRIP OR SAFETY INJECTION

PURPOSE

PRB REVIEW REQUIRED

This procedure provides actions to verify proper response of the automatic protection systems following manual or automatic actuation of a reactor trip or safety injection, to evaluate plant conditions, and to identify the appropriate recovery procedure. (Applicable in modes 1, 2 and 3)

MAJOR ACTIONS

- Verify Automatic Actions as Initiated by the Protection and Safeguards Systems.
- Identify Appropriate Optimal Recovery Guideline.
- Shut Down Unnecessary Equipment and Continue Trying to Identify Appropriate Optimal Recovery Guideline.

EMERGENCY OPERATING PROCEDURE

E-0 REACTOR TRIP OR SAFETY INJECTION

SYMPTOMS

- Any symptom that requires a reactor trip, as listed in ATTACHMENT A, if it has not occurred.
- The following are symptoms of a reactor trip:
  - a. Any reactor trip annunciator lit.
  - b. Rapid lowering of neutron level indicated by nuclear instrumentation.
  - c. All shutdown and control rods fully inserted (rod bottom lights lit).
- The following are symptoms that require a reactor trip and safety injection, if one has not occurred:
  - a. PRZR pressure less than or equal to 1870 psig.
  - b. Steamline pressure less than or equal to 585 psig.
  - c. Containment pressure greater than or equal to 3.8 psig.
- The following are symptoms of a reactor trip and safety injection:
  - a. Any SI annunciator lit.
  - b. SI ACTUATED BPLB window lit.

ACTION/EXPECTED RESPONSE	RESPONSE NOT OBTAINED

IMMEDIATE OPERATOR ACTIONS

NOTE: Foldout page should be continuously monitored and applicable actions taken.

1. VERIFY reactor trip: • Rod bottom lights-LIT. • Reactor trip and bypass breakers-OPEN. • Neutron flux-lowering.	1. TRIP reactor using both reactor trip handswitches on the QMCB. IF reactor NOT tripped, THEN go to 19211-C, FR-S.1 RESPONSE TO NUCLEAR POWER GENERATION/ATWT.
2. VERIFY turbine trip: • All turbine stop valves - SHUT.	2. TRIP turbine. IF turbine will NOT trip, THEN RUN BACK turbine. IF turbine cannot be run back, THEN SHUT main steam line isolation valves and bypass valves.
3. VERIFY power to AC emergency buses:	
a. AC emergency busses - AT LEAST ONE ENERGIZED: • 4160V AC 1E busses.	a. GO TO 19100-C, ECA-0.0 LOSS OF ALL AC POWER.
b. AC emergency busses - ALL ENERGIZED: • 4160V AC 1E busses. • 480V AC 1E busses.	b. Try to RESTORE power to de-energized AC emergency bus while continuing with Step 4.

ACTION/EXPECTED RESPONSE	RESPONSE NOT OBTAINED
4. CHECK if SI is actuated: • Any SI annunciator - LIT. • SI ACTUATED BPLB window - LIT.	4. CHECK if SI is required: IF one or more of the following conditions has occurred: • PRZR pressure less than or equal to 1870 psig. • Steam line pressure less than or equal to 585 psig. • Containment pressure greater than or equal to 3.8 psig. • Automatic alignment of ECCS equipment to injection phase. THEN SI is required. IF SI is required, THEN actuate. IF SI is NOT required, THEN GO TO 19001-C, ES-0.1 REACTOR TRIP RESPONSE.

ACTION/EXPECTED RESPONSE	RESPONSE NOT OBTAINED
SUBSEQUENT OPERATOR ACTIONS	
5. VERIFY FW Isolation: • MFIVs - SHUT. • BFIVs - SHUT. • MFRVs - SHUT. • BFRVs - SHUT.	5. SHUT valves as necessary.
6. VERIFY MLB indications for both trains of ECCS equipment aligning for injection phase.	6. ACTUATE SI.
7. VERIFY containment isolation Phase A - ACTUATED: a. CI-A MLB indicators - CORRECT FOR SI.	7. ACTUATE Phase A. IF valves do not shut, THEN SHUT valves.
8. VERIFY AFW pumps running:	
a. MDAFW pumps - RUNNING.	a. START pumps.
b. SG blowdown isolated: • SG blowdown isolation valves - SHUT WITH HANDSWITCHES IN CLOSE. • SG sample isolation valves - SHUT.	b. SHUT valves.
c. Turbine-driven pump - RUNNING IF ANY OF THE FOLLOWING CONDITIONS EXISTS: • LO-LO LEVEL IN TWO OR MORE SGs. • BLACKOUT.	c. OPEN TDAFW pump steam supply valve HV-5106.

ACTION/EXPECTED RESPONSE	RESPONSE NOT OBTAINED
9. CHECK charging and other ECCS pumps:	
a. VERIFY ECCS pumps running: • CCPs - RUNNING. • SI Pumps - RUNNING. • RHR Pumps - RUNNING.	a. START ECCS pumps.
b. NCP - NOT RUNNING	b. TRIP the NCP if it is running.
10. VERIFY CCW Pumps - TWO RUNNING EACH TRAIN.	10. START or STOP pumps to ensure two pumps running on each train.
11. CHECK proper NSCW system operation:	
a. VERIFY NSCW Pumps - TWO RUNNING EACH TRAIN.	a. START or STOP pumps to ensure two pumps running on each train.
b. VERIFY NSCW TOWER RTN HDR BYPASS BASIN handswitches - in AUTO: • HS-1668A • HS-1669A	
12. VERIFY containment cooling units:	
a. Fans - RUNNING IN LOW SPEED: • MLB indicators - CORRECT FOR SI.	a. START fans in low speed.
b. NSCW cooler isolation valves - OPEN: • MLB indicators - CORRECT FOR SI.	b. OPEN valves.

ACTION/EXPECTED RESPONSE	RESPONSE NOT OBTAINED
13. VERIFY containment ventilation isolation:	
a. Dampers and valves - SHUT:	a. SHUT dampers and valves.
• MLB indicators - CORRECT FOR SI.	
14. CHECK if main steamlines should be isolated:	
a. Check one or more of the following conditions:	a. GO TO Step 15.
• Any steamline pressure - EQUAL TO OR LESS THAN 585 PSIG.	
• Containment pressure by recording - GREATER THAN 14.5 PSIG.	
• Low Steam Pressure SI/SLI - BLOCKED <u>AND</u> High Steam Pressure Rate - ON TWO OR MORE CHANNELS OF ANY STEAMLINE.	
b. VERIFY main steamline isolation and bypass valves - SHUT.	b. SHUT valves.
15. CHECK containment spray - NOT REQUIRED:	
a. Containment pressure - HAS REMAINED LESS THAN 21.5 PSIG BY PRESSURE RECORDING.	a. PERFORM the following: 1) Verify containment spray initiated. <u>IF NOT</u>, <u>THEN</u> actuate. 2) Verify containment spray pumps running. 3) Verify containment spray pump discharge valves open.

ACTION/EXPECTED RESPONSE	RESPONSE NOT OBTAINED
16. VERIFY diesel generators - RUNNING.	16. START both DGs.

CAUTION: Non-essential personnel should be evacuated from containment if conditions warrant.

17. VERIFY ECCS flows:	
a. CCP flow indicators - CHECK FOR BIT FLOW.	a. ALIGN valves using ATTACHMENT B.
b. RCS pressure - LESS THAN 1625 PSIG.	b. Go to Step 18.
c. SI pump flow indicators - CHECK FOR FLOW.	c. ALIGN valves using ATTACHMENT C.
d. RCS pressure - LESS THAN 300 PSIG.	d. Go to Step 18.
e. RHR pump flow indicators - CHECK FOR FLOW.	e. ALIGN valves using ATTACHMENT D.
18. VERIFY the generator output breakers trip open approximately 30 seconds after main turbine trip.	18. IF breakers do not trip open, THEN refer to actions of 17031 for Window E04.

ACTION/EXPECTED RESPONSE	RESPONSE NOT OBTAINED
*19. VERIFY total AFW flow - GREATER THAN 570 GPM.	*19. IF SG NR level in any SG greater than 10% [32% ADVERSE], THEN CONTROL feed flow to maintain NR level. Continue with Step 20. IF NR level in all SGs less than 10% [32% ADVERSE], THEN START pumps and ALIGN valves as necessary. IF NR level in all SGs less than 10% [32% ADVERSE], AND total AFW flow greater than 570 gpm can NOT be established, THEN GO TO 19231-C, FR-H.1 RESPONSE TO LOSS OF SECONDARY HEAT SINK.
20. VERIFY ECCS valve alignment - PROPER INJECTION LINEUP INDICATED ON MLBs.	20. ALIGN valves using Attachments B, C and D as necessary.

ACTION/EXPECTED RESPONSE	RESPONSE NOT OBTAINED
*21. VERIFY RCS temperatures - • Any RCP running - VERIFY RCS AVERAGE TEMPERATURE STABLE AT OR TRENDING TO 557°F. -OR- • No RCP running - VERIFY RCS COLD LEG TEMPERATURES STABLE AT OR TRENDING TO 557°F.	*21. IF temperature less than 557°F and lowering, THEN PERFORM the following: a. STOP dumping steam. b. IF cooldown continues, THEN LOWER total feed flow. IF all SG NR levels less than 10% [32% ADVERSE], THEN MAINTAIN total feed flow greater than 570 gpm. c. IF cooldown continues, THEN PERFORM one or more of the following to stop cooldown: • TRIP both MFPs. • SHUT MSIVs and BSIVs. IF temperature greater than 557°F and rising, THEN: • DUMP steam to condenser. -OR- • DUMP steam using SG ARVs.

EMERGENCY OPERATING PROCEDURE

FR-H.5 RESPONSE TO STEAM GENERATOR LOW LEVEL

PRB REVIEW REQUIRED

PURPOSE

This procedure provides actions to respond to a steam generator low level condition. (Applicable in Modes 1, 2, 3, and 4.)

MAJOR ACTIONS

- Identify the Affected SG and Verify Blowdown Isolation Valves Closed.
- Determine if the Affected SG Is Faulted.
- Control AFW Flow To Restore SG Level.

ENTRY CONDITIONS

- 19200-C, F-0.3 HEAT SINK CSFST on YELLOW condition.

ACTION/EXPECTED RESPONSE	RESPONSE NOT OBTAINED

CAUTION: Steam releases from affected SG(s) should be minimized.

NOTE: Throughout this procedure, "affected" refers to any SG in which NR level is less than 10% [32% ADVERSE].

* 1. Identify affected SG(s):	
a. Check NR level - LESS THAN 10% [32% ADVERSE].	a. Return to procedure and step in effect.
2. Verify blowdown valves from affected SG(s) - SHUT:	2. Shut valves.

a. Blowdown isolation valves:

- HV-7603A - SG-1 BLOWDOWN ISOLATION
- HV-7603B - SG-2 BLOWDOWN ISOLATION
- HV-7603C - SG-3 BLOWDOWN ISOLATION
- HV-7603D - SG-4 BLOWDOWN ISOLATION

b. BLOWDOWN SAMPLE ORC VALVE:

- HV-9451 SG-1
- HV-9452 SG-2
- HV-9453 SG-3
- HV-9454 SG-4

ACTION/EXPECTED RESPONSE	RESPONSE NOT OBTAINED
3. Check affected SG(s) secondary pressure boundaries:	
a. Check pressure in affected SG(s) - • NOT LOWERING IN AN UNCONTROLLED MANNER. • NOT COMPLETELY DEPRESSURIZED.	a. IF affected SG(s) have been previously identified as faulted and have been isolated, THEN return to procedure and step in effect. IF the affected SG(s) have been previously identified as faulted and have NOT been isolated, THEN go to 19020-C, E-2 FAULTED STEAM GENERATOR ISOLATION.
4. Check AFW flow to affected SGs - GREATER THAN 30 GPM.	4. IF affected SG(s) WR level greater than 9% [31% ADVERSE], THEN establish AFW flow as necessary to refill affected SG(s). IF affected SG(s) WR level less than 9% [31% ADVERSE], THEN do not establish AFW flow to affected SG(s). Consult TSC to evaluate refilling the affected SG(s) as part of long-term plant recovery.
* 5. Continue filling affected SG(s) to establish NR level greater than 10% [32% ADVERSE].	
6. Return to procedure and step in effect.	

END OF PROCEDURE TEXT

EMERGENCY OPERATING PROCEDURE

FR-H.1 RESPONSE TO LOSS OF SECONDARY HEAT SINK

PURPOSE

PRB REVIEW REQUIRED

This procedure provides actions to respond to a loss of secondary heat sink in all steam generators. (Applicable in Modes 1, 2, 3, and 4.)

MAJOR ACTIONS

- Attempt Restoration of Feed Flow To Steam Generators
- Initiation of RCS Bleed and Feed Heat Removal
- Restore and Verify Secondary Heat Sink
- Termination of RCS Bleed and Feed Heat Removal

ENTRY CONDITIONS

- 19000-C, E-0 REACTOR TRIP OR SAFETY INJECTION, Step 18.
- 19200-C, F-0.3 HEAT SINK CSFST on a RED condition.

ACTION/EXPECTED RESPONSE	RESPONSE NOT OBTAINED

CAUTION:

- If total feed flow is less than 570 gpm due to operator action, and if total feed flow capability of 570 gpm is available, this FRP should not be performed.
- Feed flow should not be re-established to any faulted SG if a non-faulted SG is available.

NOTE: 91001-C EMERGENCY CLASSIFICATION AND IMPLEMENTING INSTRUCTIONS should be implemented at this time.

1. Check if secondary heat sink is required:	
a. RCS pressure - GREATER THAN ANY NON-FAULTED SG PRESSURE.	a. Return to procedure and step in effect.
b. RCS WR temperature - GREATER THAN 350°F.	b. Try to place the RHR system in service by initiating 13011, RESIDUAL HEAT REMOVAL SYSTEM. IF adequate cooling with the RHR system is established, THEN return to procedure and step in effect.
2. Check CCP status - AT LEAST ONE AVAILABLE.	2. Stop all RCPs. Go to Step 12. OBSERVE CAUTION PRIOR TO STEP 12.

ACTION/EXPECTED RESPONSE	RESPONSE NOT OBTAINED
* 3. Check if RCS bleed and feed is required:	
a. Check the following: • WR level in any 3 SGs-LESS THAN 29% [44% ADVERSE]. -OR- • RCS pressure due to loss of secondary heat sink - GREATER THAN 2335 PSIG.	a. WHEN either of the following exists: • WR level in any 3 SGs less than 29% [44% ADVERSE], -OR- • RCS pressure due to loss of secondary heat sink - GREATER THAN 2335 PSIG. THEN trip all RCPs and go to Step 12 and perform bleed and feed actions. GO TO Step 4.
b. Trip all RCPs.	
c. Go to Step 12 and perform bleed and feed actions. OBSERVE CAUTION PRIOR TO STEP 12.	
4. Place Containment Hydrogen Monitors in service by initiating 13130, POST ACCIDENT HYDROGEN CONTROL.	

ACTION/EXPECTED RESPONSE RESPONSE NOT OBTAINED

CAUTION: Switching to alternate CST by initiating 13610, AUXILIARY FEEDWATER SYSTEM will be necessary when CST level lowers to less than 15%.

NOTE:

- An intact steam generator should be used when available in attempting to establish a heat sink.
- IF an AFW pump is started prior to initiating bleed and feed, Step 5 should be repeated.
- If it is necessary to feed a hot (T_{hot} >550°F) steam generator(s) whose level is less than 9% WR (31% ADVERSE), it (they) should be fed one at a time at a flow rate of 30 gpm to 100 gpm until level is greater than 9% WR (31% ADVERSE), unless bleed and feed is imminent, in which case there is no limit on the flow rate.

* 5. Try to establish AFW flow to at least one SG:

a. Verify SG Blowdown isolation valves - SHUT:

- HV-7603A
- HV-7603B
- HV-7603C
- HV-7603D

b. Place SG Blowdown isolation valve handswitches in CLOSE:

- HS-7603A
- HS-7603B
- HS-7603C
- HS-7603D

ACTION/EXPECTED RESPONSE	RESPONSE NOT OBTAINED
(Step 5 continued from previous page)	
c. Verify SG sample isolation valves - SHUT: • HV-9451 • HV-9452 • HV-9453 • HV-9454	
d. Verify operating CST level greater than 15%.	

NOTE: MDAFW pump crosstie valves 1302-U4-055 and 1302-U4-056 may be opened if required to establish an AFW flowpath. Flow rate should be limited to 600 gpm to avoid pump runout.

e. Verify MDAFW pump parameters: • Power available. • Suction pressure. • Discharge pressure.	
f. Verify MDAFW pump throttle valves open: • HV-5139 MDAFW pump A to SG 1 • HV-5137 MDAFW pump A to SG 4 • HV-5132 MDAFW pump B to SG 2 • HV-5134 MDAFW pump B to SG 3	
g. Verify TDAFW pump parameters: • Steam admission valve HV-5106 - OPEN. • Trip & Throttle valve PV-15129 - OPEN (HS-15111) • Governor valve SV-15133 - OPERATING PROPERLY (PDIC-5180A).	g. Dispatch operator to TDAFW pump. Initiate 13610, AUXILIARY FEEDWATER SYSTEM to manually control TDAFW pump using the Trip & Throttle valve, if necessary.

ACTION/EXPECTED RESPONSE	RESPONSE NOT OBTAINED
(Step 5 continued from previous page)	
h. Verify TDAFW pump throttle valves open: • HV-5122 TDAFW pump to SG 1. • HV-5125 TDAFW pump to SG 2. • HV-5127 TDAFW pump to SG 3. • HV-5120 TDAFW pump to SG 4.	
i. Check total flow to SG(s) - GREATER THAN 570 GPM.	i. Go to Step 6.
j. Return to procedure and step in effect.	

6. Stop all RCPs.

ACTION/EXPECTED RESPONSE	RESPONSE NOT OBTAINED

CAUTION: If offsite power is lost after SI reset, action is required to restart the following ESF equipment if plant conditions require their operation:

- RHR pumps
- SI pumps
- Post-LOCA cavity purge units
- Containment Coolers in low speed (Started in high speed on a UV signal)
- ESF Chilled Water Pumps (if CRI has been reset)

NOTE:

- If BFIV(s) or BFRV(s) cannot be opened from the control room, an operator should be dispatched to locally open valve(s) as required.
- If feedwater flow greater than 300,000 lbm/hr is established prior to intiating bleed and feed and subsequently any 3 steam generator's WR level falls to less than 29% (44% ADVERSE), then bleed and feed is not required.

* 7. Try to establish main FW to at least one SG:	
a. Check condensate system - IN SERVICE.	a. Place condensate system in service by initiating 13615, CONDENSATE AND FEEDWATER SYSTEM. IF the condensate system can NOT be placed in service, THEN go to Step 11.
b. Check if FW isolation has been actuated.	b. Go to Step 7e.
c. Verify the following: • MFRV's SHUT AND IN MANUAL • BFRV's SHUT AND IN MANUAL	

45. 062A1.01 001

The following conditions were noted during the last Emergency Diesel Generator (EDG) test run:

- The EDG was loaded at a rate of 200 kW/min
- The maximum load attained was 7000 kW
- The maximum reactive loading was 1000 kVars negative (in)
- The output voltage was stable at 4090 Vac

Which ONE of the following was in violation of the EDG limitations?

A. Load rate (kW/min)

B. Load (kW)

C. Reactive load (kVar)

D. Output voltage (Vac)

K/A
062 AC Electrical Distribution
A1.01 Ability to predict and / or monitor changes in parameters (to prevent exceeding design limits) associated with operating the ac distribution system controls including: Significance of D/G load limits.

K/A MATCH ANALYSIS
To effectively monitor the EDG, the applicant must possess a knowledge of the design limits of the EDG. This K/A tests the reactive loading limit of the EDG.

ANSWER / DISTRACTOR ANALYSIS
A. Incorrect. The load may be raised at 1000 kW every 5 minutes. Plausible because 200 kW/min is at the upper limit.
B. Incorrect. 7000 kW is equal to the max sustained load limit. Plausible because the load is at the upper limit.
C. Correct. The EDG is procedurally restricted from having a leading kVar (kVars "in").
D. Incorrect. The output voltage is equal to the limit of what is allowed prior to breaker closure. Plausible because the voltage is lower than normal.

REFERENCES
1. 13145-1, "Diesel Generators", Ref. 56, 7/22/2004.
2. 13427-1, "4160V AC 1E Electrical Distribution System", Rev. 34.1, 8/1/2003.
3. Surry Exam SR04301, 062A1.01.

MCS Time: 1 Points: 1.00 Version: 0 1 2 3 4 5 6 7 8 9
Answer: C B B A B A A D C A Scramble Range: A - D

QUESTIONS REPORT
for VogIte 2005-301 Draft

Tier:	2	Group:	1
Key Word:	DIESEL EDG	Cog Level:	MEM 3.4
Source:	B	Exam:	VG05301
Test:	R	Author/Reviewer:	MAB/RSB

45. 062A1.01 001

The following conditions were noted during the last Emergency Diesel Generator (EDG) test run:

- The EDG was loaded at a rate of 200 kW/min
- The maximum load attained was 7000 kW
- The maximum reactive loading was 1000 kVars ~~in (-).~~ negative (in).
- The output voltage was stable at 4090 Vac

Which ONE of the following was in violation of the EDG limitations?

A. Load rate (kW/min)

B. Load (kW)

C. Reactive load (kVar)

D. Output voltage (Vac)

K/A
062 AC Electrical Distribution
A1.01 Ability to predict and / or monitor changes in parameters (to prevent exceeding design limits) associated with operating the ac distribution system controls including: Significance of D/G load limits.

K/A MATCH ANALYSIS
To effectively monitor the EDG, the applicant must possess a knowledge of the design limits of the EDG. This K/A tests the reactive loading limit of the EDG.

ANSWER / DISTRACTOR ANALYSIS
A. Incorrect. The load may be raised at 1000 kW every 5 minutes. Plausible because 200 kW/min is at the upper limit.
B. Incorrect. 7000 kW is equal to the max sustained load limit. Plausible because the load is at the upper limit.
C. Correct. The EDG is procedurally restricted from having a leading kVar (kVars "in").
D. Incorrect. The output voltage is equal to the limit of what is allowed prior to breaker closure. Plausible because the voltage is lower than normal.

REFERENCES
1. 13145-1, "Diesel Generators", Ref. 56, 7/22/2004.
2. 13427-1, "4160V AC 1E Electrical Distribution System", Rev. 34.1, 8/1/2003.
3. Surry Exam SR04301, 062A1.01.

MCS Time: 1 Points: 1.00 Version: 0 1 2 3 4 5 6 7 8 9
Answer: C B B A B A A D C A Scramble Range: A - D

QUESTIONS REPORT
for Voglte 2005-301 Draft

Tier:	2	Group:	1
Key Word:	DIESEL EDG	Cog Level:	MEM 3.4
Source:	B	Exam:	VG05301
Test:	R	Author/Reviewer:	MAB/RSB

3. 062A1.01 001

The following conditions were noted during the last Emergency Diesel Generator (EDG) test run:

- The EDG was loaded at a rate of 200 kW/min
- The maximum load attained was 7000 kW
- The maximum reactive loading was 1000 kVars in. (-)
- The output voltage was stable at ~~4025~~ 4090 Vac

Which ONE of the following was in violation of the EDG limitations?

A. Load rate (kW/min)

B. Load (kW)

C. Reactive load (kVar)

D. Output voltage (Vac)

K/A
062 AC Electrical Distribution
A1.01 Ability to predict and / or monitor changes in parameters (to prevent exceeding design limits) associated with operating the ac distribution system controls including: Significance of D/G load limits.

K/A MATCH ANALYSIS
To effectively monitor the EDG, the applicant must possess a knowledge of the design limits of the EDG. This K/A tests the reactive loading limit of the EDG.

ANSWER / DISTRACTOR ANALYSIS
A. Incorrect. The load may be raised at 1000 kW every 5 minutes. Plausible because 200 kW/min is at the upper limit.
B. Incorrect. 7000 kW is equal to the max sustained load limit. Plausible because the load is at the upper limit.
C. Correct. The EDG is procedurally restricted from having a leading kVar (kVars "in").
D. Incorrect. The output voltage is equal to the limit of what is allowed prior to breaker closure. Plausible because the voltage is lower than normal.

REFERENCES
1. 13145-1, "Diesel Generators", Ref. 56, 7/22/2004.
2. 13427-1, "4160V AC 1E Electrical Distribution System", Rev. 34.1, 8/1/2003.
3. Surry Exam SR04301, 062A1.01.

MCS Time: 1 Points: 1.00 Version: 0 1 2 3 4 5 6 7 8 9
Answer: C B B A B A A D C A Scramble Range: A - D

QUESTIONS REPORT
for Voglte 2005-301 Draft

Tier:	2	Group:	1
Key Word:	DIESEL EDG	Cog Level:	MEM 3.4
Source:	B	Exam:	VG05301
Test:	R	Author/Reviewer:	MAB/RSB

DIESEL GENERATORS

PROCEDURE USAGE REQUIREMENTS-		SECTIONS
Continuous Use:	Procedure must be open and readily available at the work location. Follow procedure step by step unless otherwise directed.	**ALL**
Reference Use:	Procedure or applicable section(s) available at the work location for ready reference by person performing steps.	**NONE**
Information Use:	Available on plant site for reference as needed.	**NONE**

2 **LIMITATIONS**

2.1 A Diesel Generator will not accept an Emergency Start signal from the Control Room if any of the following conditions exist:

a. Local/Remote Switch 1-HS-4516 (4517) at PDG1 (PDG3) is in LOCAL,

b. Starting air pressure in both air headers is less than 150 psig,

c. Engine controls are in the maintenance mode,

d. Emergency Stop circuit energized,

e. Overspeed trip not reset.

NOTE

A Diesel Generator Emergency Start is initiated by closure of the Train A or B Engineered Safety Feature Safety Injection contacts, Loss of Offsite Power, or operation of the manual Emergency Start Switch station at the Engine Control Panel. All other Diesel Generator start signals are considered to be a Normal Start.

2.2.2 The following Diesel Engine shutdown signals are bypassed during an Emergency Start:

a. High crankcase pressure,

b. High engine/turbocharger vibration,

c. Low turbocharger oil pressure,

d. High engine bearing temperature,

e. High engine lube oil temperature,

f. Low jacket water pressure,

g. Loss of field and Phase Overcurrent 186B (SI only),

h. High jacket water temperature.

2.3 The rated capacity of a Diesel Generator is 7000 kW, load should not be permitted to exceed 7000 kW during testing unless specifically required by the test procedure. A 10% overload of 7700 kW is allowed for 2 hours during emergency operation.

2.2.4 The Diesel Generators should not be operated at less than 30% load (2100 kW) for prolonged periods of time.

2.2.5 If prolonged operation at less than 30% load cannot be avoided, the Diesel Generator should be loaded to 50% (3500 kW) for a 2 hour period for each 24 hour period of low or no-load operation.

2.2.6 The Diesel Generators can operate at full load for 3 minutes with no Nuclear Service Cooling Water (NSCW) flow. If NSCW flow is not established within 3 minutes to a running Diesel Generator, the Diesel Generator should be tripped.

2.2.7 The pneumatic engine barring device will only operate when the engine is in the MAINTENANCE mode and must be disengaged before the engine can return to the OPERATION mode.

2.2.8 Once initiated, the Diesel Generator shutdown signals remain in effect for 90 seconds. During this period, the Diesel Generator will only respond to an Emergency Start signal generated by a Safety Injection Actuation signal, Loss of Offsite Power, or the local Emergency Start Switch. To preclude the depletion of starting air, wait until local red stopping light is OFF (approximately 90 seconds) after a normal stop before attempting to start the diesel normally.

2.2.9 All start attempts(i.e. whenever a start pushbutton is depressed), both manual and automatic, including those made to support maintenance activities, shall be logged in the Unit Shift Supervisor's and/or Unit Control logbook and documented by completion of Completion Sheet 1 in the Diesel Generator Logbook. The log entry shall include the following information:

a. Start time,

b. Reason for start.

2.2.10 After each Diesel start, a copy of Completion Sheet 1 (completed) will be sent to the Diesel Generator Engineer and the original will remain in the Diesel Generator Logbook. The Diesel Test Evaluation section of Completion Sheet 1 will be completed by the System Engineer.

FIGURE 2

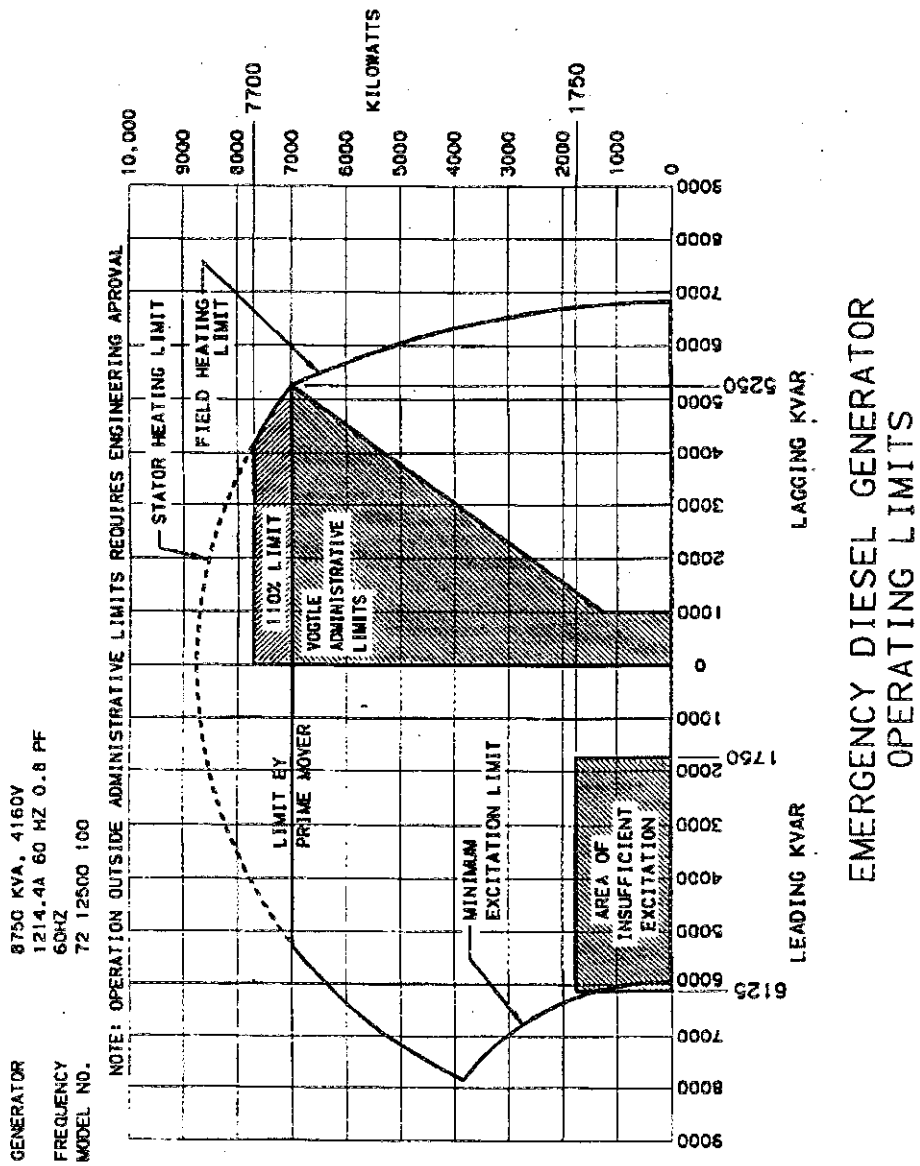
EMERGENCY DIESEL GENERATOR
OPERATING LIMITS
KILOWATTS
10,000
9000
8000
7700
7000
6000
5000
4000
3000
2000
1750
1000
0
LAGGING KVAR
5250
LEADING KVAR
6125
1750
STATOR HEATING LIMIT
FIELD HEATING LIMIT
110% LIMIT
VOGTLE ADMINISTRATIVE LIMITS
LIMIT BY PRIME MOVER
MINIMUM EXCITATION LIMIT
AREA OF INSUFFICIENT EXCITATION
NOTE: OPERATION OUTSIDE ADMINISTRATIVE LIMITS REQUIRES ENGINEERING APROVAL
GENERATOR 8750 KVA, 4160V
1214.4A 60 HZ 0.8 PF
FREQUENCY 60HZ
MODEL NO. 72 12500 100

4160V AC 1E ELECTRICAL DISTRIBUTION SYSTEM

PROCEDURE USAGE REQUIREMENTS-		SECTIONS
Continuous Use:	Procedure must be open and readily available at the work location. Follow procedure step by step unless otherwise directed.	**ALL**
Reference Use:	Procedure or applicable section(s) available at the work location for ready reference by person performing steps.	**NONE**
Information Use:	Available on plant site for reference as needed.	**NONE**

1.1.16 If required, ALIGN the Diesel Generator 1A (1B) for Standby per 13145-1, "Diesel Generators".

4.1.1.17 PERFORM 14230-1, "A.C. Source Verification" and 14235-1, "On-Site Power Distribution Operability Verification" for the RAT 1NXRA (1NXRB) [or SAT ANXRA] supplying 1AA02 (1BA03).

4.1.1.18 If 1AA02 (1BA03) is energized from the SAT, INITIATE Checklist 1 (2) "480V AC Switchgear Voltage Monitoring" found in 13418-C, "Standby Auxiliary Transformer".

4.2 **SYSTEM OPERATION**

4.2.1 **Paralleling Diesel Generator To 4160V AC Bus**

CAUTIONS

a. In Modes 1, 2, 3 and 4, the Diesel Generator should not be paralleled to a bus with the SAT connected except for Diesel Generator testing or hot bus transfer.

b. When The Diesel Generator is paralleled to the bus with the SAT connected, a fault on the Wilson Underground Line will cause the 151NX Neutral Ground Timed Overcurrent Relay to trip and alarm "DG GENERATOR TROUBLE" annunciator locally and on ALB35-E01 (ALB37-E01). If this occurs, the SAT should be removed from the bus by discontinuing parallel operation per section 4.2.4

c. Never transfer the Local-Remote Switch 1-HS-4516 (1-HS-4517) on PDG1 (PDG3) to LOCAL position while the Diesel Generator is being operated in the Parallel mode as this will take the governor and voltage regulator out of the droop mode.

4.2.1.1 DISPATCH an operator to locally monitor Diesel Generator 1A (1B) during startup and loading.

4.2.1.2 START Diesel Generator 1A (1B) from the Control Room per 13145-1, "Diesel Generators".

NOTE

Unless otherwise noted, all switch manipulations are to be performed at the Control Room Panel QEAB.

4.2.1.3 ENSURE the Diesel Generator 1A (1B) Sync Mode Selector Switch TS-DG1A (TS-DG1B) is in AUTO.

CAUTION

Placing two sync switches to ON position at the same time will blow PT fuses. A sync scope meter indication of 12 o'clock may indicate a sync switch is ON.

4.2.1.4 ENSURE Breaker 1AA02-05 (1BA03-01) and 1AA02-01 (1BA03-05) Synchronization Switches are OFF.

4.2.1.5 PLACE the Breaker 1AA02-19 (1BA03-19) Synchronization Switch to ON.

4.2.1.6 VERIFY Diesel Generator is in the Parallel Mode by observing the blue DSL GEN 1A (1B) UNIT MODE/FAST START light is not illuminated.

4.2.1.7 SET the Diesel Generator Load Pot 1-SE-4915 (1-SE-4916) to 1.00. [This corresponds to 700 kW, 10% of Full Load.]

CAUTION

4160V Bus Voltage should be between 4025V and 4200V prior to paralleling the Diesel Generator to ensure bus voltage remains less than 4326V while loading. If required, coordinate as necessary with the System Operator to establish these conditions.

4.2.1.8 SELECT 1AA02 (1BA03) 4160V Bus phase voltage of the highest value on the QEAB Voltmeter by moving the BUS 1AA02 (1BA03) Normal Incoming Voltmeter Switch through all positions.

4.2.1.9 SELECT the Diesel Generator 1A (1B) voltage of the lowest value on the QEAB Voltmeter by moving the Diesel Generator 1A (1B) Voltmeter Switch through all positions.

NOTE

It may be necessary to adjust generator speed slightly in order to verify the next step.

4.2.1.10 VERIFY Sync Scope Meter is rotating, Synchronizing Lights are bright at the 6 o'clock position, Synchronizing lights are dark at the 12 o'clock position, and the Red AUTO SYNC PERMISSIVE LIGHT comes on near the 12 o'clock position.

4.2.1.11 ADJUST generator voltage to approximately 50V above the highest phase of the bus voltage, as necessary.

NOTE

The following step adjusts DG frequency slightly higher than bus frequency to ensure the DG will start loading when the breaker is closed.

4.2.1.12 While observing the Sync Scope, ADJUST the generator speed until the Sync Scope needle is rotating slowly in the clockwise (Fast) direction, (greater than 10 seconds per revolution).

CAUTION

As soon as the DG Output breaker closes, be prepared to control kVAR in the specified acceptable range.

4.2.1.13 When the Sync Scope needle reaches the 11 o'clock position, DEPRESS and HOLD the Diesel Generator 1A (1B) AUTO SYNC PERMISSIVE PUSHBUTTON PB-DG1A (PB-DG1B).

2.1.14 VERIFY that the DG1A (DG1B) OUTPUT BRKR 1AA02-19 (1BA03-19) closes when the Sync Scope reaches the 12 o'clock position and RELEASE the Auto Sync Permissive Pushbutton.

4.2.1.15 VERIFY that generator loads to approximately 700 kW.

4.2.1.16 ADJUST generator voltage to obtain kVAR loading between 200 and 300 kVAR positive (Out). If kVAR loading goes negative (In) and no adjustment can be made with the voltage control to restore kVAR load positive (Out), TRIP Diesel Generator Breaker 1AA02-19 (1BA03-19).

4.2.1.17 PLACE Breaker 1AA02-19 (1BA03-19) Synchronization Switch to OFF.

NOTE

The Diesel Generator is now paralleled with the Normal Incoming Source.

4.2.1.18 RECORD Diesel Generator data required in 11885-C, "Diesel Generator Operating Log".

4.2.1.19 If desired, CONTINUE parallel operation of the Diesel Generator, LOAD the generator as follows:

CAUTION

With the Diesel paralleled to the bus, depressing the Diesel Generator Speed Control Pushbuttons (RAISE or LOWER) will shift the span of the D/G LOAD POT and the pot settings will no longer reflect 10% to 110% load. This shift can be nulled by using the RAISE or LOWER Pushbuttons to match Diesel Generator load with current pot setting. Discontinuing parallel operation will automatically reset any bias that may have occurred.

NOTES

a. As generator load is adjusted in the following step, generator voltage should be adjusted concurrently to maintain kVAR loading positive (Out) and no more than half the KW load. Figure 1 should be referenced as a guide.

b. The generator should be loaded in increments of approximately 1000 kW and 500 kVAR in time increments of approximately 5 minutes between load changes.

c. D/G LOAD POT 1-SE-4915 (1-SE-4916) has a range of 10% [1.00] to 110% [11.00] D/G LOAD which corresponds to 700 kW - 7700 kW.

1. 062A1.01 001

The following conditions were noted during the performance of 1-OPT-EG-001, Number 1 Emergency Diesel Generator Monthly Start Exercise Test:
- The EDG was loaded at a rate of 550 KW/MIN
- The Maximum load attained was 2650 KW
- The Maximum KVAR was 500 KVAR out
- The output voltage was stable at 4300 VAC

Which ONE of the following was in violation of the EDG Precautions and Limitations per 1-OPT-EG-001?

A. Load Rate

B. Maximum Load

C. Maximum KVAR out

D. Output voltage

Surry

References:
1-OPT-EG-001, Number 1 Emergency Diesel Generator Monthly Start Exercise Test, Rev. 24
1-OP-EG-001, Number 1 Emergency Diesel Generator, Rev. 17

Distractor Analysis:
A. Correct because the loading rate should not exceed 500 KW/MIN during normal operations.
B. Incorrect because max load rating is 2750 KW.
C. Incorrect because max KVAR out is 500 KVAR.
D. Incorrect because output voltage should be maintained between 4000 and 4400 VAC.

062 AC Electrical Distribution
A1.01: Ability to predict and / or monitor changes in parameters (to prevent exceeding design limits) associated with operating the ac distribution system controls including: Significant D/G load limits.

Tier:	1	Group:	2
Key Word:	EDG DIESEL	Cog Level:	MEM 3.4/3.8
Source:	N	Exam:	SR04301
Test:	R	Author / Reviewer:	MAB/SDR

46. 062A3.05 001

The following conditions exist on Unit 1:

- A small break LOCA has occurred
- Safety Injection has just been reset
- CCW pump 1 has just undergone a complete shear of its shaft

Which ONE of the following, assuming no operator action, correctly describes the status of the plant loads 30 seconds after the Diesel Generator Output Breakers close following a complete loss of offsite power?

A. ACCW Pump 1 is running AND CCW Pumps 1, 3, and 5 are running.

B. ACCW Pump 1 is running AND only CCW Pumps 1 and 3 are running with CCW Pump 5 not running.

C. RHR Pump A is running AND CCW Pumps 1, 3, and 5 are running.

D. RHR Pump A is running AND CCW Pumps 1 and 3 are running with CCW Pump 5 not running.

K/A
062 AC Electrical Distribution
A3.05 Ability to monitor automatic operation of the ac distribution system, including: Safety-related indicators and controls.

K/A MATCH ANALYSIS
The question tests the knowledge of how the electrical distribution system is designed to work given the conditions presented in the question.

ANSWER / DISTRACTOR ANALYSIS
A. Incorrect. CCW Pump 5 will only be running if the breaker of CCW Pump 1 or 3 does not close. Applicant may think that CCW Pump 5 would start on low discharge P.
B. Correct. ACCW Pump 1 will close 15.5 sec after EDG breaker closure and CCW Pumps 1 and 3 will start 20.5 sec after EDG breaker closure.
C. Incorrect. With SI reset, RHR pumps must be manually started. Plausible because CCW pumps 1 and 3 are running and applicant may think that 5 would start on low discharge P, but non-sequencer starts are blocked. (Partially correct distractor)
D. Incorrect. see "C" above.

REFERENCES
1. Modified from WB020301 question 062A3.05 (same K/A).
2. Lesson Plan V-LO-TX-28201, Sequencer.
3. Lesson Plan V-LO-TX-10101, CCW. (Ref provided to support plausibility of distractors)

MCS	Time: 1	Points: 1.00	Version:	0 1 2 3 4 5 6 7 8 9			
			Answer:	B C B B D D C D C A		Scramble Range: A - D	
Tier:	2			Group:	1		
Key Word:	LOSP SEQUENCER			Cog Level:	C/A 3.5		
Source:	M			Exam:	VG05301		
Test:	R			Author/Reviewer:	MAB/RSB		

46. 062A3.05 001

The following conditions exist on Unit 1:

- A small break LOCA has occurred
- Safety Injection has just been reset
- CCW pump 1 has just undergone a complete shear of its shaft

Which ONE of the following, assuming no operator action, correctly describes the status of the plant loads 30 seconds after the Diesel Generator Output Breakers close following a complete loss of offsite power?

A. ACCW Pump 1 is running AND CCW Pumps 1, 3, and 5 are running.

B. ✓ ACCW Pump 1 is running AND only CCW Pumps 1 and 3 are running with CCW Pump 5 not running.

C. RHR Pump A is running AND CCW Pumps 1, 3, and 5 are running.

D. RHR Pump A is running AND CCW Pumps 1 and 3 are running with CCW Pump 5 not running.

K/A
062 AC Electrical Distribution
A3.05 Ability to monitor automatic operation of the ac distribution system, including: Safety-related indicators and controls.

K/A MATCH ANALYSIS
The question tests the knowledge of how the electrical distribution system is designed to work given the conditions presented in the question.

ANSWER / DISTRACTOR ANALYSIS
A. Incorrect. CCW Pump 5 will only be running if the breaker of CCW Pump 1 or 3 does not close. Applicant may think that CCW Pump 5 would start on low discharge P.
B. Correct. ACCW Pump 1 will close 15.5 sec after EDG breaker closure and CCW Pumps 1 and 3 will start 20.5 sec after EDG breaker closure.
C. Incorrect. With SI reset, RHR pumps must be manually started. Plausible because CCW pumps 1 and 3 are running and applicant may think that 5 would start on low discharge P, but non-sequencer starts are blocked. (Partially correct distractor)
D. Incorrect. see "C" above.

REFERENCES
1. Modified from WB020301 question 062A3.05 (same K/A).
2. Lesson Plan V-LO-TX-28201, Sequencer.
3. Lesson Plan V-LO-TX-10101, CCW. (Ref provided to support plausibility of distractors)

MCS	Time: 1	Points: 1.00	Version:	0 1 2 3 4 5 6 7 8 9			
			Answer:	B C B B D D C D C A		Scramble Range: A - D	
Tier:	2			Group:	1		
Key Word:	LOSP SEQUENCER			Cog Level:	C/A 3.5		
Source:	M			Exam:	VG05301		
Test:	R			Author/Reviewer:	MAB/RSB		

1. 062A3.05 001

The following conditions exist on Unit 1:

- A small break LOCA has occurred
- Safety Injection has just been reset
- CCW pump 1 has just undergone a complete shear of its shaft

Which ONE of the following, assuming no operator action, correctly describes the status of the plant loads 30 seconds after the Diesel Generator Output Breakers close following a complete loss of offsite power?

A. ACCW Pump 1 is running AND CCW Pumps 1, 3, and 5 are running.

B. ✓ ACCW Pump 1 is running AND only CCW Pumps 1 and 3 are running with CCW Pump 5 not running.

C. RHR Pump A is running AND CCW Pumps 1, 3, and 5 are running.

D. RHR Pump A is running AND CCW Pumps 1 and 3 are running with CCW Pump 5 not running.

K/A
062 AC Electrical Distribution
A3.05 Ability to monitor automatic operation of the ac distribution system, including: Safety-related indicators and controls.

K/A MATCH ANALYSIS
The question tests the knowledge of how the electrical distribution system is designed to work given the conditions presented in the question.

ANSWER / DISTRACTOR ANALYSIS
A. Incorrect. CCW Pump 5 will only be running if the breaker of CCW Pump 1 or 3 does not close. Applicant may think that CCW Pump 5 would start on low discharge P.
B. Correct. ACCW Pump 1 will close 15.5 sec after EDG breaker closure and CCW Pumps 1 and 3 will start 20.5 sec after EDG breaker closure.
C. Incorrect. With SI reset, RHR pumps must be manually started. Plausible because CCW pumps 1 and 3 are running and applicant may think that 5 would start on low discharge P, but non-sequencer starts are blocked. (Partially correct distractor)
D. Incorrect. see "C" above.

REFERENCES
1. Modified from WB020301 question 062A3.05 (same K/A).
2. Lesson Plan V-LO-TX-28201, Sequencer.
3. Lesson Plan V-LO-TX-10101, CCW. (Ref provided to support plausibility of distractors)

MCS	Time: 1	Points: 1.00	Version:	0 1 2 3 4 5 6 7 8 9			
			Answer:	B C B B D D C D C A		Scramble Range: A - D	
Tier:	2			Group:	1		
Key Word:	LOSP SEQUENCER			Cog Level:	C/A 3.5		
Source:	M			Exam:	VG05301		
Test:	R			Author/Reviewer:	MAB/RSB		

V-LO-TX-28201

Sequencer Operation in Response to an UV Condition.

The Sequencer is constantly monitoring for a loss of or degraded voltage on its 4160 VAC bus. The following diagram shows how the signal is processed from the bus to the plant loads.

UV Processing Block Diagram

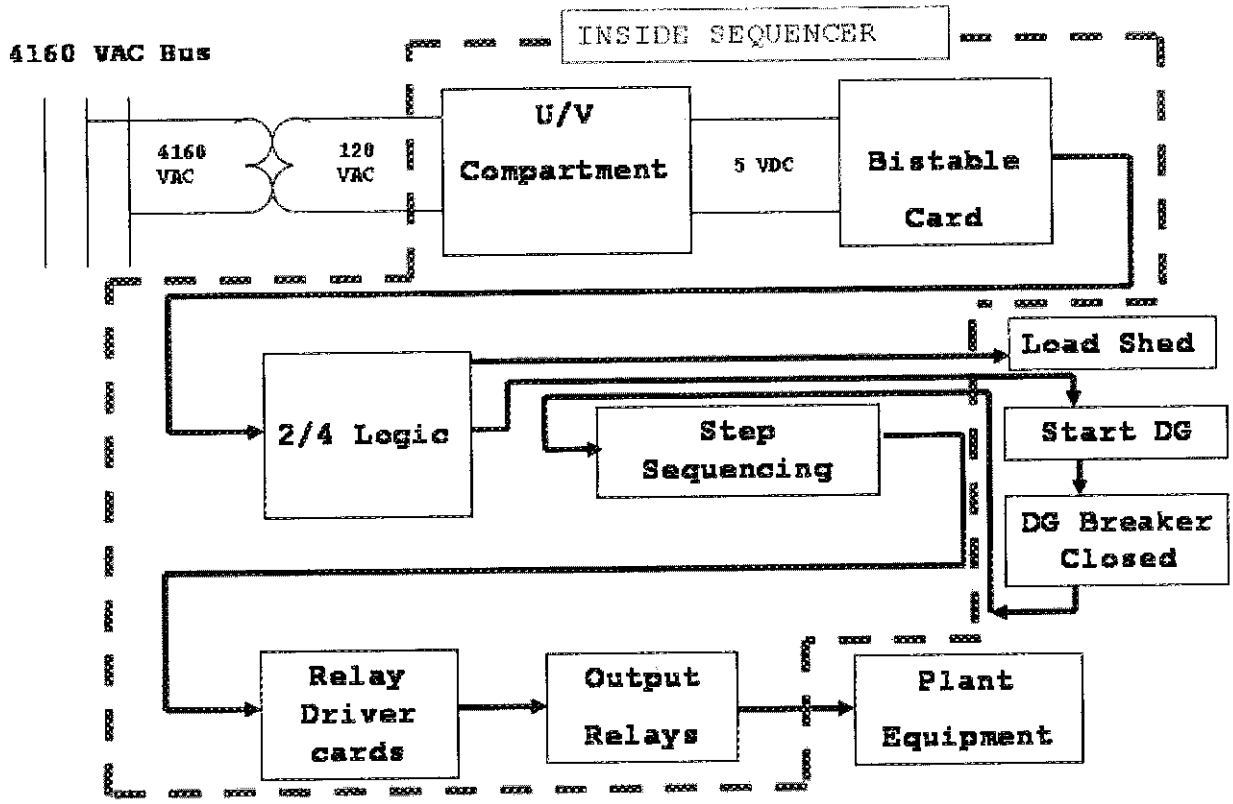

Before discussing sequencer operation on an U/V or SI signal, there are two functions that occur during sequenced operation that should be explained. These are the Block Auto/Manual signal and non sequenced load relays. These functions occur during SI and U/V sequencing.

The Block Auto/Manual signal is a signal that prevents a change in equipment operation in two cases. First, the Block Auto/Manual signal blocks equipment from automatically starting due to an auto start signal caused by a normal system process such as a low header pressure or high temperature. A good example of this is the prevention of the start of the standby NSCW pump on low header pressure during an SI signal. In the second case, the Block Auto/Manual signal blocks the operator from manually stopping the equipment. Both of these blocks are their to prevent other load changes on the bus during load sequencing to ensure voltage and load limits on the bus are maintained. Manual starting of equipment by the operator is not blocked in any way to allow starts of equipment, if equipment failures require it. If load

sequencing is in progress, operators should allow this to complete prior to starting this equipment. The Block Auto/Manual signal is generated on an U/V or SI signal. The signal is removed 36 seconds after receipt of an SI only. For an U/V signal or an U/V and SI signal, the Block Auto/Manual signal is removed 36 seconds after the DG output breaker is closed. ∴ Block is still in.

Non sequenced load relays are relays that are actuated immediately by the sequencer on the actuation signal (U/V or SI). The UV non sequenced relays actuate loads such as valves, generate trip signals to breakers, or provide start permissive to start on load sequencing. These loads generally do not need power from the emergency AC bus to actuate or are small loads; therefore load sequencing is not required. The SI non sequenced relays provide block signals to loads that should not start with an SI signal present.

Some examples of non-sequenced loads are the TDAFWP steam admission valve HV-5106), AFW discharge motor operated valves, steam generator blow down isolation valves, tripping of the incoming feeder breakers (U/V only), and tripping of the normal charging pump (SI only).

The Sequencer System monitors for three decreased levels of bus voltage (U/V). The U/V Bistable cards in Logic Bay 2 perform this function. If the bistable trip setpoint is reached, the "Red Trip" lamps on the corresponding bistable modules are lit. These trip indicators are sealed in and must be manually reset by depressing the indicator.

UV Detection

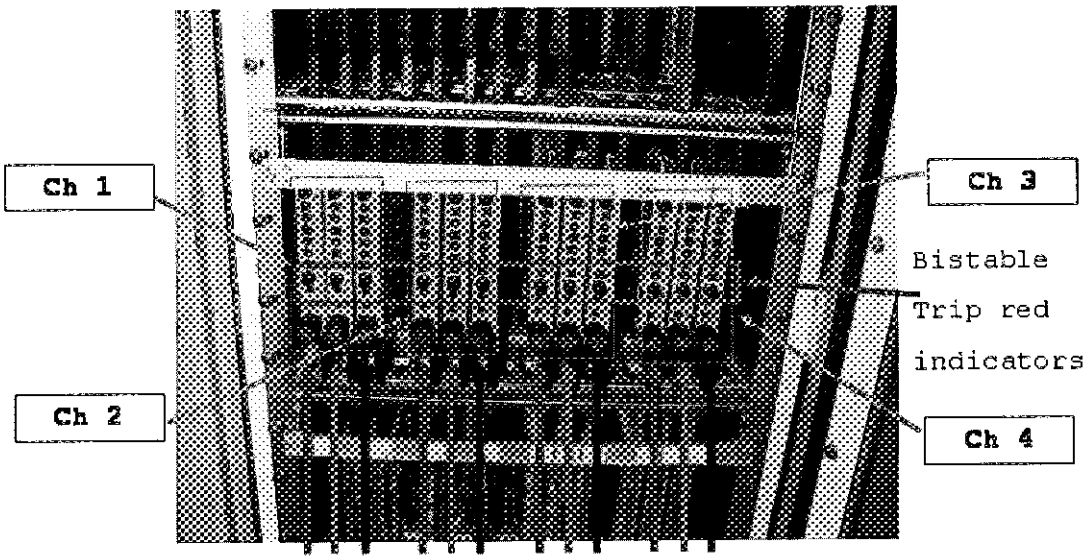

1st Level	≤ 71.5% for ≥ 0.8 sec
2nd Level	≤ 90% for ≥ 20 sec
3rd Level	≤ 93.1% for ≥ 10 sec

The U/V Schemes are as follows:

First level voltage- (INSTANTANEOUS Trip) <71.5 %(2975 VAC) for >0.8 sec.
Coincidence is 2/4.

As would be for LOSP.

Second level voltage- DEGRADED(Trip) <90 % (3746 VAC) for >20 sec.
Coincidence is 2/4.

Third level voltage- (Alarm only) <93.1 % (3873 VAC) for >10 sec.
Coincidence is 2/4.

The operation of the Vogtle Safety Features Sequencer System is automatic. Upon receiving a bus undervoltage (U/V) signal, the sequencer will automatically shed loads from the power bus, provide a start signal to the diesel generator, and, when the diesel generator is on line, sequentially return selected loads to the bus.

On an undervoltage actuation (First or second Level) the following actions are performed by the sequencer: (There is figure 1, Sequencer Manual Test Panel at the end of this section that can be used with the discussions of Sequencer operation)

Time=0 sec

Emergency start signal sent to Diesel Generator.

Load shed occurs:

1 sec trip signal sent to the Normal and Emergency feeder breakers to the 4160 VAC bus.

1 sec trip signal sent to pump breakers to the 4160 VAC bus.

1 sec trip signal sent to 480 VAC secondary side (low side) Switchgear breakers for all 1E and Non 1E loads.

Auto/Manual Block circuit is enabled.

U/V non sequenced load relays are energized to actuate those loads. This same signal generates the UNDERVOLTAGE light on the sequencer panel.

Signal sent to Loss of Power (LOP) monitor circuit.

Reset and stop signal sent to ATI subsystem. ATI step counter is reset to 00 and stopped.

Reset and inhibit signal sent to Manual test circuits.

Lights **U/V SIGNAL** (red), **U/V RELAYS ACTUATED** (red), **BLOCK AUTO/MNL SIG** (red), **SEQ LOGIC FAILURE** (amber), **UNDERVOLTAGE** (amber) generated on Sequencer panel.

Sequencer Trouble and **AA02 (BA03)SWGR Trouble** alarms received in the control room on the QEAB.

Time=0.5 sec

Sends DG Breaker Auto Closure permissive to DG output breaker closure circuit if not blocked by LOP monitor circuit.

Time=6.0 to 11.5 secs	When DG ready to load, DG output breaker closes. **D-G BRKR CLOSED** (red) light generated on Sequencer panel. Sequencer elapsed time display begins running.
Brkr CL +0.5 to 30.5 secs	**SEQ STEPS INDICATION** (red) for steps 1A-9A and 1C-9C will begin flashing in the intervals specified in the list below as the components are sequence on.

UV LOAD SEQUENCE

Train A only (Train B loads are similar)

TIME	LOAD
0.5 secs	CCP A, 480 VAC Secondary side feeder breakers
5.5 sec	NONE
10.5 sec	NB01 (Stub bus secondary side feeder breaker closes)
15.5 sec	ACCW Pump 1
20.5 sec	CCW Pumps 1 and 3 MDAFW Pump A
25.5 sec	NSCW Pumps 1 and 3 CCW Pump 5 (if CCW Pumps 1 or 3 breaker did not close) Sheared Shaft → Breaker is closed on CCW Pumps 1 & 3.
30.5 sec	CTMT Cooling Units 5 and 6 (Fast Speed) NSCW pump 5 (if NSCW Pumps 1 or 3 breaker did not close) CTMT Cooling Units 1 and 2 start contact closed (Fast Speed) CTMT cooling units must not all be started at the same time to prevent bus voltage transients. Analysis has shown that if all four were allowed to be simultaneously, DG voltage could drop below 80 percent. The sequencer provides all CTMT cooling units with a start signal at the 30.5 second step. Coolers 1, 2, 7, and 8 start at 50.5 seconds due to an additional time delay of 20 seconds by an agastat time delay relay in the auto-start circuit. This is for a UV condition only.

Time=32 secs	**SEQ STEPS INDICATION** (red) flashing lights extinguish. **SAF EQPT FAIL TO START** (amber) light to indicate that Cnmt Coolers 1 and 2 have not started. Audible alarm is sounded on the sequencer panel. Alarm generated on QEAB. ATI stop removed and ATI restarted
Time=36 secs	**BLOCK AUTO/MNL SIG** (red) light extinguishes.
Time=50.5 sec	CTMT Cooling Units 1 and 2 start (Fast Speed) *This is not a sequencer function but internal to the start logic of the cooler high speed motors* **SAF EQPT FAIL TO START** (amber) light extinguishes. QEAB alarm clears.

Sequencer Operation in Response to an SI Condition with a U/V Condition.

There are five separate combinations to consider on operation with an SI and an U/V condition. They are:

SI signal and U/V simultaneously
SI signal following U/V (before sequencing is complete)
SI signal following U/V (after sequencing is complete)
U/V following SI signal (before SI is reset)
U/V following SI signal (after SI is reset)

The general rule of operation in these conditions is the sequencer operation will be a combination of the U/V and SI sequences. By understanding priority system of the sequencer, each of the above combinations can be evaluated. The U/V sequence will predominate until the ESF bus is energized. With the bus energized, the SI signal will predominate.

If a SI and U/V signal are received simultaneously, the SI sequence will be initiated after the completion of the load shed and subsequent re-energization of the 1E bus by the EDG.

If a U/V signal is received after SI actuation, the sequencer will initiate a load shed and generate the permissive for the EDG to re-energize the 1E bus (the EDG would have previously been started by the initiating SI signal). After the 1E bus is re-energized, the loading sequence will be a function of the status of the SI signal. If the SI signal is still present, the SI sequence will be initiated at step 1.

If the SI signal is no longer present (i.e. SI has been reset) when the EDG re-energizes the 1E bus, then the U/V sequence will be initiated at step 1. After completion of the loading sequence, any SI loads required to be in service that were not started during the U/V sequence will have to be manually placed in service (i.e. SI pumps, RHR pumps, Containment Cooler Low Speed motors, ESF Chilled Water pumps and ESF Chillers).

If an SI signal is received after the U/V sequence has been initiated, the sequencer will suspend the U/V sequence upon receipt of the SI signal and restart at step 1 of the SI sequence. If the SI signal is received after completion of the U/V sequence, then the sequencer will begin at step 1 of the SI sequence. For these conditions, since the 1E bus was energized at the time the SI signal was received, no additional load shed will occur. Any U/V loads started from the initiating U/V signal will remain in operation.

062A3.05

QUESTIONS REPORT
for Westinghouse 4-Loop Questions

1. 062A3.05 001

Given that the following occurred in sequence:

- A small break LOCA occurred which resulted in a reactor trip and SI.
- The SI signal was reset during the performance of E-1, "Loss of Reactor or Secondary Coolant."
- A loss of offsite power (LOOP) occurred and the diesel generators loaded as designed.

Assuming no operator actions, which ONE of the following would be the status of the loads on the 6.9kV SD boards?

A. All equipment powered from the SD boards with the control board switch in automatic will be restarted.

B. No 6.9kV SD board loads are automatically restarted.

C. Equipment normally started during a LOOP will be automatically restarted; SI and RHR pumps remain OFF.

D. All equipment that was operating prior to the LOOP will be automatically restarted; All running ESF equipment will be reenergized

Reference: WB Exam Bank

RO Tier:	T2G2	SRO Tier:	T2G2
K/A Value:	LOSP LOOP	Cog. Level:	C/A 3.5/3.6
Source:	B	Exam:	WB020301
Test:	C	Misc:	RLM

operator should notify the Unit Shift Supervisor and per ARP 17100-1/2, place "B" train of the CCW System with applicable loads in service, if possible, using SOP 13715-1/2.

B. CCW Surge Tank Low-Low Level

The operator should have already received an alarm (ALB02 C05)at 52% (CCW Surge Tank Makeup Level) and a second alarm (ALB02 B05) at 50% (CCW Surge Tank Low Level). A third alarm (ALB02 A05) will be received at 42% (CCW Surge Tank Low-Low level) at which time the CCW pumps for that particular train will trip. ARP 17002-1/2 then directs the operator to enter AOP 18020-C "Loss of Component Cooling Water".

In the AOP, the operator will be directed to perform the following:

- Check the operation of the affected train. Verify that the train is not operating properly and that two pumps in that same train can not be placed in service.
- Place the unaffected train of CCW in service.
- Verify that NSCW system parameters are normal for the unaffected train.
- Place the unaffected train of RHR in service if required.
- Verify the unaffected train of CCW has normal system parameters.
- Place the unaffected train of SFP Cooling in service.
- Restore the affected train of CCW to service and implement the applicable Tech Spec actions.

C. CCW Low Header Pressure

The CCW Low Header Pressure alarm (ALB02 A06) setpoint is 65 psig. The standby CCW pump will start on low header pressure. Low CCW header pressure could be due to the trip or degradation of a running pump or due to a leak in the system. Low header pressure due to a leak in the system would likely be accompanied by Auxiliary Building Leak Detection alarms on the QPCP. A tripped pump would be indicated by an "AMBER" light on a pump hand switch. Indication of a degraded pump could be identified by CCW system pressure and/or flow less than normal (90 psig and 9000 gpm). The operator would have to look at the IPC trends for CCW pressure and flow prior to the alarm to see the degradation. Once the standby pump starts, the QMCB indicators may not be useful in determining a degraded pump since the indicators will probably return to the normal range. If a degraded pump is determined to be the cause of the CCW Low Header Pressure alarm, the possibility of three pumps running in the train is likely. Remember, three pump operation is undesirable. This could result in component flow rates being exceeded and system pressure may exceed relief valve set points. One pump should be shut down as soon as possible following a transient in which three pumps are started and surge tank level should be monitored to ensure system relief valves properly reseat.

47. 062G2.1.32 001

The following Unit 1 conditions exists:

- 18021-C, Loss of Nuclear Cooling Water System, has been entered and operators are at the point in the procedure where they are going to place one train of Nuclear Service Cooling Water in service in single pump operation.
- The pump that is going to be started tripped on a spurious overcurrent.

Which ONE of the following correctly describes precautions and limitations for starting the nuclear service cooling water pump and placing loads inservice under these conditions?

A. The electrical lockout relay for the pump to be started must be reset prior to pump start. Following pump start, system flow is adjusted to less than or equal to 9500 gpm.

B. The electrical lockout relay for the pump to be started does not need to be reset prior to pump start. Following pump start, system flow is adjusted to less than or equal to 9500 gpm.

C. The electrical lockout relay for the pump to be started must be reset prior to pump start. Following pump start, the supply header pressure is restricted to less than 93 psig.

D. The electrical lockout relay for the pump to be started does not need to be reset prior to pump start. Following pump start, the supply header pressure is restricted to less than 93 psig.

K/A
062 Loss of Nuclear Svc Water
G2.1.32 Ability to explain and apply all system limits and precautions.

K/A MATCH ANALYSIS
A loss of NSCW has occurred and the crew is preparing to take mitigating actions for the event. The question tests knowledge in the SOP's Precautions and Limitations Section associated with restoring NSCW. Therefore, the question is testing the applicant's ability to explain and apply system limits and precautions during a loss of NSCW event.

ANSWER / DISTRACTOR ANALYSIS
A. Correct. See 13150-1, Step 2.1.4 and 2.1.7.
B. Incorrect. The relay must be reset.
C. Incorrect. See 13150-1, Step 4.4.10.8: Supply header pressure must be greater than or equal to 93 psig, not less than 93 psig. Plausible because applicant may recognize the 93 psig and the relay does need to be reset.
D. Incorrect. See 13150-1, Step 4.4.10.8: Supply header pressure must be greater than or equal to 93 psig, not less than 93 psig. Plausible because applicant may recognize the 93 psig.

REFERENCES
1. 13150-1, Nuclear Service Cooling Water System, Rev. 32, 08/04/2003.
2. 18021-C, Loss of Nuclear Service Cooling Water, Rev. 13, 11/03/2003.

MCS Time: 1 Points: 1.00 Version: 0 1 2 3 4 5 6 7 8 9
Answer: A B C C C D B C D C Scramble Range: A - D

Tier:	1	Group:	1
Key Word:	SERVICE WATER NSCW	Cog Level:	MEM 3.4
Source:	N	Exam:	VG05301
Test:	R	Author/Reviewer:	MAB/RSB

47. 062G2.1.32 001

The following Unit 1 conditions exists:

- 18021-C, Loss of Nuclear Cooling Water System, has been entered and operators are at the point in the procedure where they are going to place one train of Nuclear Service Cooling Water in service in single pump operation.
- The pump that is going to be started tripped on a spurious overcurrent.

Which ONE of the following correctly describes precautions and limitations for starting the nuclear service cooling water pump and placing loads inservice under these conditions?

A. The electrical lockout relay for the pump to be started must be reset prior to pump start. Following pump start, the ACCW Heat Exchanger Inlet Valve must be positioned to restrict flow to not exceed ~~9500 gpm.~~ ~~exceed the max allowed flowrate through the ACCW heat exchanger.~~

B. The electrical lockout relay for the pump to be started does not need to be reset prior to pump start. Following pump start, the ACCW Heat Exchanger Inlet Valve must be positioned to restrict flow to not exceed 9500 gpm.

C. The electrical lockout relay for the pump to be started must be reset prior to pump start. Following pump start, the ACCW Heat Exchanger Inlet Valve must be positioned to restrict supply header pressure to less than 93 psig.

D. The electrical lockout relay for the pump to be started does not need to be reset prior to pump start. Following pump start, the ACCW Heat Exchanger Inlet Valve must be positioned to restrict supply header pressure to less than 93 psig.

A. Following pump start, system flow is adjusted to ≤ 9500 gpm.

B. similar

C. Following pump start, the supply header flow is restricted to less than 93 psig.

D. similar

K/A
062 Loss of Nuclear Svc Water
G2.1.32 Ability to explain and apply all system limits and precautions.

K/A MATCH ANALYSIS
A loss of NSCW has occurred and the crew is preparing to take mitigating actions for the event. The question tests knowledge in the SOP's Precautions and Limitations Section associated with restoring NSCW. Therefore, the question is testing the applicant's ability to explain and apply system limits and precautions during a loss of NSCW event.

ANSWER / DISTRACTOR ANALYSIS
A. Correct. See 13150-1, Step 2.1.4 and 2.1.7.
B. Incorrect. The relay must be reset.
C. Incorrect. See 13150-1, Step 4.4.10.8: Supply header pressure must be greater than or equal to 93 psig, not less than 93 psig. Plausible because applicant may recognize the 93 psig and the relay does need to be reset.
D. Incorrect. See 13150-1, Step 4.4.10.8: Supply header pressure must be greater than or equal to 93 psig, not less than 93 psig. Plausible because applicant may recognize the 93 psig.

REFERENCES
1. 13150-1, Nuclear Service Cooling Water System, Rev. 32, 08/04/2003.
2. 18021-C, Loss of Nuclear Service Cooling Water, Rev. 13, 11/03/2003.

MCS	Time:	1	Points:	1.00	Version:	0 1 2 3 4 5 6 7 8 9	
					Answer:	A B C C C D B C D C	Scramble Range: A - D

Tier:	1	Group:	1
Key Word:	SERVICE WATER NSCW	Cog Level:	MEM 3.4
Source:	N	Exam:	VG05301
Test:	R	Author/Reviewer:	MAB/RSB

QUESTIONS REPORT
for Voglte 2005-301 Draft

1. 062G2.1.32 001

The following Unit 1 conditions exists:

- 18021-C, Loss of Nuclear Cooling Water System, has been entered and operators are at the point in the procedure where they are going to place one train of Nuclear Service Cooling Water in service in single pump operation.
- The pump that is going to be started tripped on overcurrent. a spurious
- Maintenance has cleared the fault and notified the control room staff that the pump is available to be started.

Which ONE of the following correctly describes precautions and limitations for starting the nuclear service cooling water pump and placing loads inservice under these conditions?

A. The 186M electrical lockout relay for the pump to be started must be reset prior to pump start. Following pump start, the ACCW Heat Exchanger Inlet Valve must be positioned to restrict flow to less than 9500 gpm. not exceed

B. The 186M electrical lockout relay for the pump to be started does not need to be reset prior to pump start. Following pump start, the ACCW Heat Exchanger Inlet Valve must be positioned to restrict flow to less than 9500 gpm. not exceed

C. The 186M electrical lockout relay for the pump to be started must be reset prior to pump start. Following pump start, the ACCW Heat Exchanger Inlet Valve must be positioned to restrict supply header pressure to less than 93 psig.

D. The 186M electrical lockout relay for the pump to be started does not need to be reset prior to pump start. Following pump start, the ACCW Heat Exchanger Inlet Valve must be positioned to restrict supply header pressure to less than 93 psig.

K/A
062 Loss of Nuclear Svc Water
G2.1.32 Ability to explain and apply all system limits and precautions.

K/A MATCH ANALYSIS
A loss of NSCW has occurred and the crew is preparing to take mitigating actions for the event. The question tests knowledge in the SOP's Precautions and Limitations Section associated with restoring NSCW. Therefore, the question is testing the applicant's ability to explain and apply system limits and precautions during a loss of NSCW event.

ANSWER / DISTRACTOR ANALYSIS
A. Correct. See 13150-1, Step 2.1.4 and 2.1.7.
B. Incorrect. The relay must be reset.
C. Incorrect. See 13150-1, Step 4.4.10.8: Supply header pressure must be greater than or equal to 93 psig, not less than 93 psig. Plausible because applicant may recognize the 93 psig and the relay does need to be reset.
D. Incorrect. See 13150-1, Step 4.4.10.8: Supply header pressure must be greater than or equal to 93 psig, not less than 93 psig. Plausible because applicant may recognize the 93 psig.

REFERENCES
1. 13150-1, Nuclear Service Cooling Water System, Rev. 32, 08/04/2003.
2. 18021-C, Loss of Nuclear Service Cooling Water, Rev. 13, 11/03/2003.

MCS	Time:	1	Points:	1.00	Version:	0 1 2 3 4 5 6 7 8 9	
					Answer:	A B C C C D B C D C	Scramble Range: A - D

Tier:	1	Group:	1
Key Word:	SERVICE WATER NSCW	Cog Level:	MEM 3.4
Source:	N	Exam:	VG05301
Test:	R	Author/Reviewer:	MAB/RSB

4.4.9 NSCW Single Pump Operation (Outage)

4.4.10 NSCW Train A Single Pump Operation (Abnormal)

4.4.11 NSCW Train B Single Pump Operation (Abnormal)

4.4.12 Return To Two Pump Operation From Single Pump Operation

4.4.13 Isolation Of NSCW To ACCW Heat Exchanger

4.4.14 Restoration Of NSCW To ACCW Heat Exchanger

4.4.15 Manual Tower Return Valve Operation

4.4.16 Operation Of NSCW With Containment Loads Isolated in Modes 5, 6 or Defueled

4.4.17 NSCW Blowdown Operation

2.0 PRECAUTIONS AND LIMITATIONS

2.1 PRECAUTIONS

2.1.1 A standby NSCW Train is maintained full by the operating NSCW Train. If one NSCW Train has been drained or shutdown for an extended period of time, it should be filled and vented per Section 4.4.7 prior to starting it up.

2.1.2 Thoroughly vent all isolated NSCW components prior to returning them to service. NSCW supplied Safety Related Pump Motor Coolers (SI Pumps, CCPs, CCW Pumps, CS Pumps and RHR Pumps) for example, not properly vented by opening vent valves and/or drain valves specified in Checklist 1 and 2, have led to flow stoppage in all or part of the motor cooler sections. This action also minimizes possible system performance degradation due to air entrainment in other vital components.

2.1.3 Have Chemistry sample prior to placing Blowdown in service to ensure the chlorine content is within limits.

2.1.4 If loads are required to be placed in service after single pump operation has been established, ACCW Heat Exchanger Inlet Valve must be adjusted to ensure NSCW flow does not exceed 9500 gpm (Section 4.4.9)

2.1.5 In Sections 4.4.9, 4.4.10, 4.4.11 and 4.4.12 (single pump operation) the NSCW System is not operable per Tech. Spec. LCO 3.7.8

2.1.6 Whenever an operating NSCW Cooling Tower Fan is manually STOPPED, the operator must hold the applicable fan's hand switch to STOP for a minimum of three seconds prior to releasing to AUTO.

2.1.7 NSCW Pumps have an electrical lockout relay (186M). This must be reset prior to restart following an overcurrent trip.

2.1.8 Motor coolers which have been drained for maintenance, then filled and vented, shall have an Ultrasonic flow measurement performed approximately 24 hours following return to service. Flow rates of individual motor coolers should be measured to determine if air binding of a single cooler has occurred.

2.2 **LIMITATIONS**

2.2.1 ODCM section 2.1.1, Table 2-1, F.U.2 requires NSCW Effluent Monitors RE-0020A (20B) to be OPERABLE and in service when their associated NSCW Trains are in service.

2.2.2 Technical Specifications LCO 3.7.8 and LCO 3.7.9 specify NSCW operability requirements.

2.2.3 NSCW Pump Motor Starting Limitations:

a. Three successive starts within 15 minutes, provided the pump ran for 10 minutes after the second start.

b. Three successive starts within 30 minutes, provided the pump has stood idle for 20 minutes after the second start.

c. The motor will return to operating temperature after running for 20 minutes or standing idle for 45 minutes.

2.2.4 All six pumps receive safety injection start signals with pumps 5 or 6 only starting on a failure of pumps 1 and 3 or 2 and 4 to start. Pumps 1 and 3, and 2 and 4 will auto-start on an SI signal regardless if pump 5 or 6 are running. Therefore, if pump 5 or 6 is running when an SI signal is received, it is possible to have three pumps running on one train. This is undesirable because component flow rates may be exceeded. One pump should be stopped so that only two pumps per train are running.

4.4.10.8 At the ACCW Heat Exchanger, THROTTLE either the inlet isolation valve or the heat exchanger bypass valve as needed to establish and maintain the following system conditions:

	QMCB
Supply Header Pressure ≥93psig	1-PI-1636
Supply Header Flow ≤9500 gpm	1-FI-1640A/B

ACCW HX A NSCW INLET ISO - 1-HV-11708 Key (1OP2-123)

OR

ACCW HX A Bypass - 1-HV-11709 Key (1OP2-124)

NOTE

The following step provides guidance and flexibility to better meet the needs of actual plant conditions. This is accomplished by reducing flows to one component to supply flow to another.

4.4.10.9 THROTTLE flows as necessary to support equipment required for specific plant conditions:

a. If additional containment cooling capability is desired,

(1) REDUCE NSCW supply header flow to no more than 7500 gpm by manually THROTTLING the ACCW HX inlet or bypass valve,

(2) PLACE additional containment coolers in service by OPENING the containment cooler inlet and outlet isolation valves that were closed in step 4.4.10.3,

(3) READJUST flow to the ACCW HX as required to maintain NSCW system pressure and flow as detailed in step 4.4.10.8.

Abnormal Operating Procedures

LOSS OF NUCLEAR SERVICE COOLING WATER SYSTEM

PURPOSE

PRB REVIEW REQUIRED

This procedure addresses the loss or degraded operation of one or more trains of Nuclear Service Cooling Water (NSCW).

SYMPTOMS

- Trip of operating NSCW pumps and failure of standby pump to start.
- Dropping NSCW Supply Header pressure.
- Large difference between Supply Header flow and Return Header flow, indicating a large leak.
- NSCW Tower Basin temperature rising above 90°F.
- High temperature or low flow alarms on any components or systems cooled by NSCW.

ACTION/EXPECTED RESPONSE	RESPONSE NOT OBTAINED
1. Verify only 2 NSCW pumps running normally in the AFFECTED train.	1. a. If catastrophic leakage is present: 1) Place all pump handswitches in the AFFECTED train in PULL-TO-LOCK. 2) Shut down the train-related Emergency Diesel Generator or disable automatic operation by initiating 13145, DIESEL GENERATORS. 3) Verify proper operation of UNAFFECTED NSCW train and go to Step 4. b. IF no pumps or only one pump can be placed in service, THEN: 1) Place all pump handswitches in the AFFECTED train in PULL-TO-LOCK. 2) Shut down the train-related Emergency Diesel Generator or disable automatic operation by initiating 13145, DIESEL GENERATORS. 3) Investigate cause for trip of running pump(s). c. IF three pumps are running, and the low header pressure annunciator is clear, THEN trip one pump and go to Step 2. d. IF power is not available per status light indication, THEN initiate 18031-C, LOSS OF CLASS 1E ELECTRICAL SYSTEMS.

ACTION/EXPECTED RESPONSE	RESPONSE NOT OBTAINED
2. Check AFFECTED NSCW train operation:	
a. Verify the following: • Supply header pressure - GREATER THAN 70 PSIG. Train A: PI-1636 Train B: PI-1637 • Supply header temperature computer indication - LESS THAN 90°F. Train A: TE-1642 Train B: TE-1643 • Supply header flow - APPROXIMATELY 17,000 GPM. Train A: FI-1640B Train B: FI-1641B	a. Ensure the opposite NSCW train in operation by initiating 13150, NUCLEAR SERVICE COOLING WATER SYSTEM. -OR- IF neither NSCW train can be placed in normal, two pump operation, THEN: • Trip the reactor and go to 19000-C, E-0 REACTOR TRIP OR SAFETY INJECTION. • Trip all reactor coolant pumps. • Isolate letdown • Attempt to place one train of NSCW in single pump operation by initiating 13150, NUCLEAR SERVICE COOLING WATER SYSTEM. WHEN single pump NSCW operation has been established, THEN verify RCP No. 1 seal temperatures less than 220°F, and ensure the train-related CCP is running and seal injection flow established per 13006, CHEMICAL AND VOLUME CONTROL SYSTEM.

ACTION/EXPECTED RESPONSE	RESPONSE NOT OBTAINED
(Step 2 continued from previous page)	
	IF RCP No. 1 seal temperatures greater than 220°F, THEN do not attempt to restart RCPs prior to consulting with Engineering and plant management.
b. Check NSCW cooling tower basin levels - GREATER THAN 73%. Train A: LI-1606 Train B: LI-1607	b. Stop cooling tower blowdown. Makeup to cooling towers by initiating 13150, NUCLEAR SERVICE COOLING WATER SYSTEM. -OR- Comply with Tech. Spec. LCO 3.7.9.
c. Verify proper operation of AFFECTED NSCW train.	c. Go to Step 4.
3. Go to Step 12.	
4. Start or verify in automatic, as required, the following components in the UNAFFECTED train: • CCP • SIP • CS Pump • RHR Pump • CCW Pumps • CREFs • ESF Chiller	4. Initiate the following as appropriate: • 18020-C, LOSS OF COMPONENT COOLING WATER • 18022-C, LOSS OF AUXILIARY COMPONENT COOLING WATER • 18019-C, LOSS OF RESIDUAL HEAT REMOVAL

48. 063A4.01 001

The following Unit 1 conditions exist:

- Reactor startup is in progress
- Reactor power has stabilized at $2x10^{-3}$% Intermediate Range
- Intermediate Range channel N-35 was declared inoperable and removed from service

Which ONE of the following describes the plant response if an I&C Technician mistakenly removes control power fuses for N-35 instead of instrument power fuses while performing AOP-18002-C, "Nuclear Instrumentation System Malfunction"?

A. The source range detectors, N-31 and N-32, are automatically reinstated because the P-6 permissive clears.

B. The reactor trip breakers indicate closed because the trip signal was blocked by the P-6 permissive.

C. The bistables for reactor trip and rod withdrawal block de-energize, however reactor trip breakers indicate closed.

D. The level trip bypass is lost and the reactor trip breakers indicate open.

(I NEED UTILITY'S HELP WITH VALIDATION AND DISTRACTOR ANALYSIS)

K/A
063 DC Electrical Distribution
A4.01 Ability to manually operate and / or monitor in the control room: Major breakers and control power fuses.

K/A MATCH ANALYSIS
This question matches the K/A because it tests the applicant's ability to monitor both the operation of the control power fuses and the affect the removal of control power fuses will have on the reactor trip breakers.

ANSWER / DISTRACTOR ANALYSIS
A. Incorrect. I do not think P-6 clears???
B. Incorrect. RTBs will open.
C. Incorrect. RTBs will open.
D. Correct. According to Vogtle's exam bank, this is correct.

REFERENCES
1. Vogtle Exam Bank Question LO-LP-17103-09-01.
2. Lesson Plan V-LO-TX-28101, RPS-SSPS-AMSAC.
3. Lesson Plan V-LO-TX-17201, Source and Intermediate Range Nuclear Instruments.

QUESTIONS REPORT
for VogIte 2005-301 Draft

MCS Time: 1 Points: 1.00 Version: 0 1 2 3 4 5 6 7 8 9

Answer: D C D D D A D C B A Scramble Range: A - D

Tier:	2	Group:	1
Key Word:	CONTROL FUSE BREAKER	Cog Level:	C/A 2.8
Source:	B	Exam:	VG05301
Test:	R	Author/Reviewer:	MAB/RSB

48. 063A4.01 001

The following Unit 1 conditions exist:

- Reactor startup is in progress
- Reactor power has stabilized at $2x10^{-3}$% Intermediate Range
- Intermediate Range channel N-35 was declared inoperable and removed from service

Which ONE of the following describes the plant response if an I&C Technician mistakenly removes control power fuses for N-35 instead of instrument power fuses while performing AOP-18002-C, "Nuclear Instrumentation System Malfunction"?

A. The source range detectors, N-31 and N-32, are automatically reinstated because the P-6 permissive clears.

B. The reactor trip breakers indicate closed because the trip signal was blocked by the P-6 permissive.

C. The bistables for reactor trip and rod withdrawal block de-energize, however reactor trip breakers indicate closed.

D. The level trip bypass is lost and the reactor trip breakers indicate open.

(I NEED UTILITY'S HELP WITH VALIDATION AND DISTRACTOR ANALYSIS)

K/A
063 DC Electrical Distribution
A4.01 Ability to manually operate and / or monitor in the control room: Major breakers and control power fuses.

K/A MATCH ANALYSIS
This question matches the K/A because it tests the applicant's ability to monitor both the operation of the control power fuses and the affect the removal of control power fuses will have on the reactor trip breakers.

ANSWER / DISTRACTOR ANALYSIS
A. Incorrect. I do not think P-6 clears???
B. Incorrect. RTBs will open.
C. Incorrect. RTBs will open.
D. Correct. According to Vogtle's exam bank, this is correct.

REFERENCES
1. Vogtle Exam Bank Question LO-LP-17103-09-01.
2. Lesson Plan V-LO-TX-28101, RPS-SSPS-AMSAC.
3. Lesson Plan V-LO-TX-17201, Source and Intermediate Range Nuclear Instruments.

QUESTIONS REPORT

for Vogtle 2005-301 Draft

MCS Time: 1 Points: 1.00 Version: 0 1 2 3 4 5 6 7 8 9

Answer: D C D D D A D C B A Scramble Range: A - D

Tier:	2	Group:	1
Key Word:	CONTROL FUSE BREAKER	Cog Level:	C/A 2.8
Source:	B	Exam:	VG05301
Test:	R	Author/Reviewer:	MAB/RSB

2. 063A4.01 001

The following Unit 1 conditions exist:

- Reactor startup is in progress
- Reactor power has stabilized at $2x10^{-3}$% Intermediate Range
- Intermediate Range channel N-35 was declared inoperable and removed from service

Which ONE of the following describes the plant response if an I&C Technician mistakenly removes control power fuses for N-35 instead of instrument power fuses while performing AOP-18002-C, "Nuclear Instrumentation System Malfunction"?

A. The source range detectors, N-31 and N-32, are automatically reinstated because the P-6 permissive clears.

B. The reactor trip breakers indicate closed because the trip signal was blocked by the P-6 permissive.

C. The bistables for reactor trip and rod withdrawal block de-energize, however reactor trip breakers indicate closed.

D. The level trip bypass is lost and the reactor trip breakers indicate open.

(I NEED UTILITY'S HELP WITH VALIDATION AND DISTRACTOR ANALYSIS)

K/A
063 DC Electrical Distribution
A4.01 Ability to manually operate and / or monitor in the control room: Major breakers and control power fuses.

K/A MATCH ANALYSIS
This question matches the K/A because it tests the applicant's ability to monitor both the operation of the control power fuses and the affect the removal of control power fuses will have on the reactor trip breakers.

ANSWER / DISTRACTOR ANALYSIS
A. Incorrect. I do not think P-6 clears???
B. Incorrect. RTBs will open.
C. Incorrect. RTBs will open.
D. Correct. According to Vogtle's exam bank, this is correct.

REFERENCES
1. Vogtle Exam Bank Question LO-LP-17103-09-01.
2. Lesson Plan V-LO-TX-28101, RPS-SSPS-AMSAC.
3. Lesson Plan V-LO-TX-17201, Source and Intermediate Range Nuclear Instruments.

QUESTIONS REPORT
for Voglte 2005-301 Draft

MCS Time: 1 Points: 1.00 Version: 0 1 2 3 4 5 6 7 8 9

Answer: D C D D D A D C B A Scramble Range: A - D

Tier:	2	Group:	1
Key Word:	CONTROL FUSE BREAKER	Cog Level:	C/A 2.8
Source:	B	Exam:	VG05301
Test:	R	Author/Reviewer:	MAB/RSB

LO-LP-17103-09-01
Given the Following:

* Unit 1 Reactor Startup is in progress

* Reactor power is stabilized at 2 E-3% Intermediate Range

* Intermediate Range channel N-35 was declared inop and removed from service

Which One of the following describes the plant response if an I&C Technician mistakenly removes control power fuses for N-35 instead of Instrument power fuses while performing AOP-18002-C?

A. The trip bistable energizes, however ~~a~~ the reactor trip ~~does not occur~~ breakers indicate closed because the trip signal was blocked by the P-6 Permissive.

B. The Source Range Detectors , N31 and N32, are automatically reinstated because the P-6 permissive clears.

C. The bistables for reactor trip and the rod withdrawal block de-energize, however ~~no trip occurs~~ reactor trip breakers indicate closed because N-35 is bypassed.

D. The trip bistable deenergizes, the level trip bypass is lost and ~~a~~ the reactor trip ~~occurs~~ breakers indicate open.

LO-LP-17103-09
State the functions of the following controls on theSR/IR processor

a. Level trip switch
b. Test mode switch
c. Rate test switch
d. Level test switch
e. SR HF@SD
f. Output
g. IR gain adjust

V-LO-TX-28101

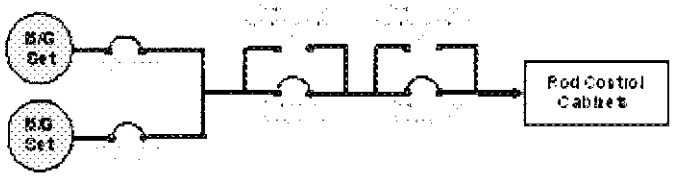

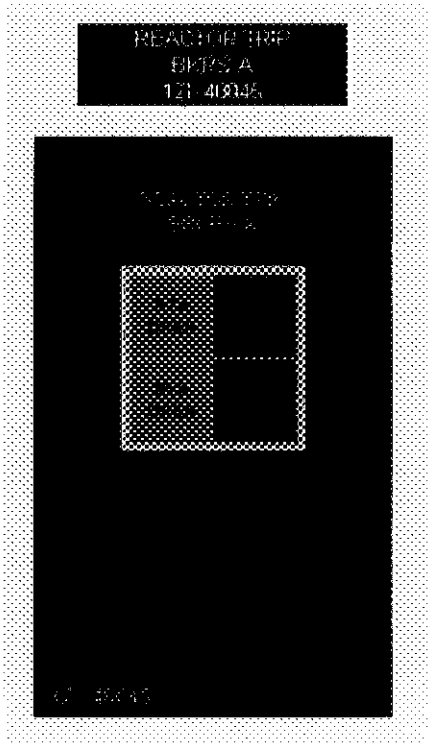

28.21 Reactor Trip Breakers

There are four circuit breakers used for reactor trip protection on each unit. Two reactor trip breakers and two bypass reactor trip breakers. The reactor trip breakers are in series and carry power from the rod control motor generator set to the rod control system. The rod control system requires power not only to move the control rods, but also to maintain their position. Each reactor trip breaker is controlled by its associated train of SSPS for reactor protection. When reactor protection is required, power is interrupted to the rod control system by the opening of the reactor trip breakers. This loss of power to the rod control system causes the control rods to drop into the core causing the reactor to shutdown. The two bypass breakers are used for testing and for performing maintenance on its associated reactor trip breaker. The bypass reactor trip breakers are normally open and racked out to the disconnect position.

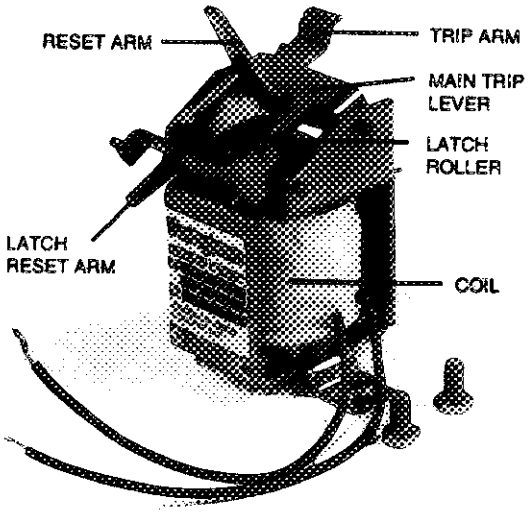

All four breakers have an Under Voltage (UV) and a Shunt Trip coil installed inside the breakers that perform the tripping functions. The UV trip coils are normally energized holding its trip plunger out against spring pressure. This fail safe design causes the reactor trip breaker to open when its UV trip coil de-energizes. When the UV trip coil de-energizes the trip plunger is released which allows the reactor trip breaker to open. The Shunt trip coil is normally de-energized and is designed as a direct backup to the UV trip coil. When the shunt trip coil is energized its plunger deflects the trip mechanism which will cause the trip breaker to open also.

Now that we know what devices actually perform the tripping function, we can now discuss how the trip devices fit in the reactor protection scheme. Remember, the reactor protection system always "fails safe". The UV trip coils are normally energized at ~ 43 VDC. This 43 VDC power comes from the UV driver card which is located in the logic cabinet portion of SSPS. This 43 VDC also powers the "Auto Shunt

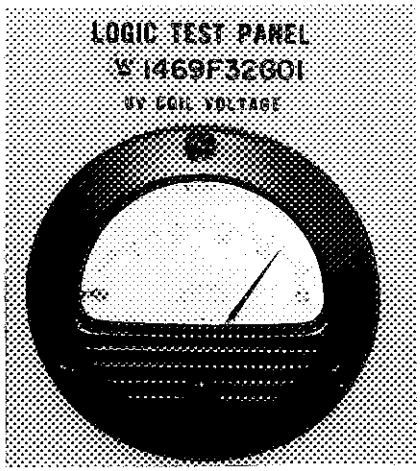

Trip Relay" (not to be confused with the "Shunt Trip Coil"). The two are related by their function. If the 43 VDC is maintained from the UV driver card, a contact will remain open which interrupts power to the "shunt trip coil". When a reactor trip is processed by SSPS logic cards, the UV driver removes 43 VDC from the UV trip coil and to the "Auto Shunt trip relay". The loss of power to the "Auto Shunt Trip Relay" causes a contact to close which supplies 125 VDC to the "Shunt Trip Coil". This "Auto Shunt Trip Relay" is provided for the Main Reactor Trip Breakers only. This feature was an addition to the plant design due to industry events caused by the malfunctions of the under voltage trip devices.

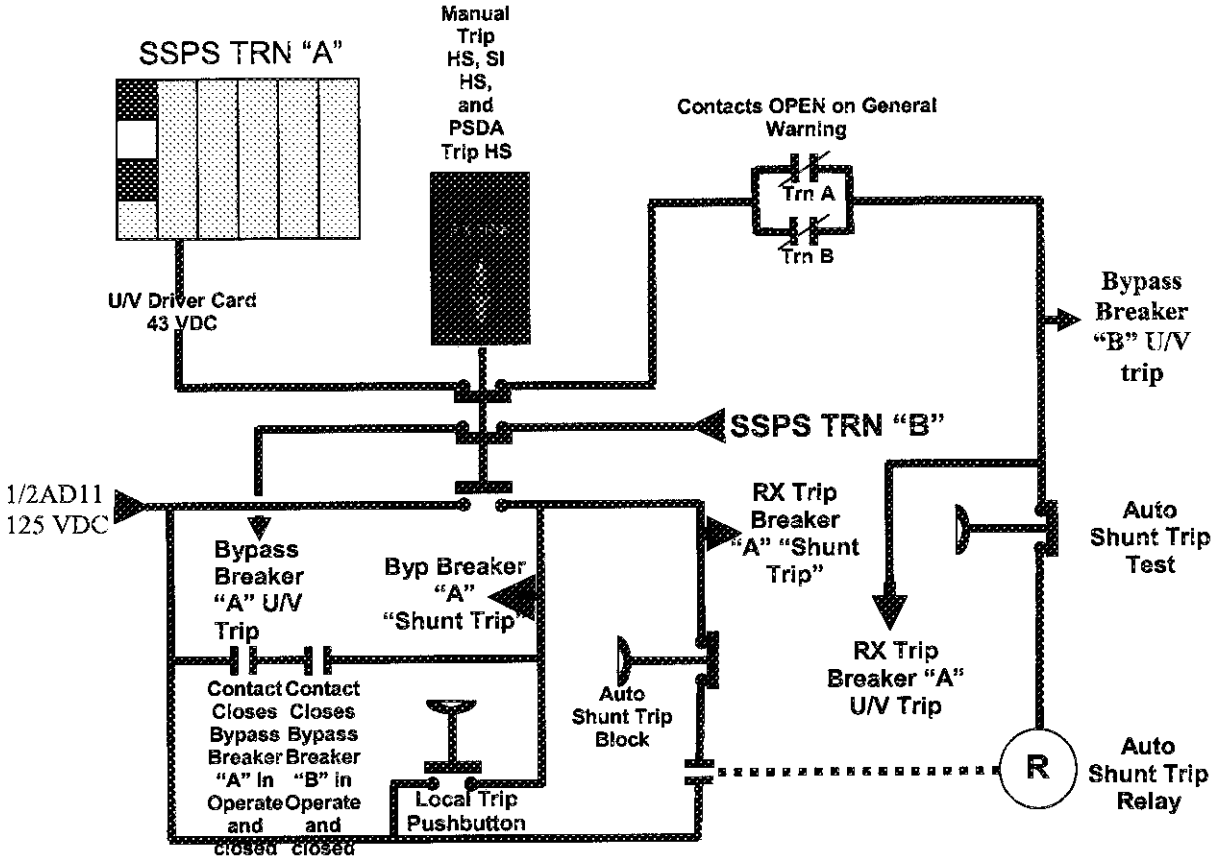

Train "A" Reactor Trip and Bypass Trip Breaker Scheme shown in the Non-Tripped State

Using the diagram above, trace out the flow paths of the different ways the reactor trip breakers receive trip signals. All automatic reactor trips originate from the SSPS logic cabinet. Train "A" SSPS sends both a U/V trip and a shunt trip to Reactor Trip Breaker "A", and a U/V trip only to Bypass Trip breaker "B". Train "B" SSPS sends both a U/V and a shunt trip to Reactor Trip Breaker "B", and a U/V only to Bypass Reactor Trip Breaker "A". This cross train trip for the Bypass trip breakers is designed to allow testing of the SSPS and reactor trip breakers online. Manual reactor trip and Safety Injection hand switches located in the main control room send a direct U/V and shunt trip to all four trip breakers. The reactor trip hand switch located on the remote shutdown panels "A" and "B" sends both a U/V and shunt trip to its associated train reactor trip and bypass breakers.

Reactor Trip Breaker Layout

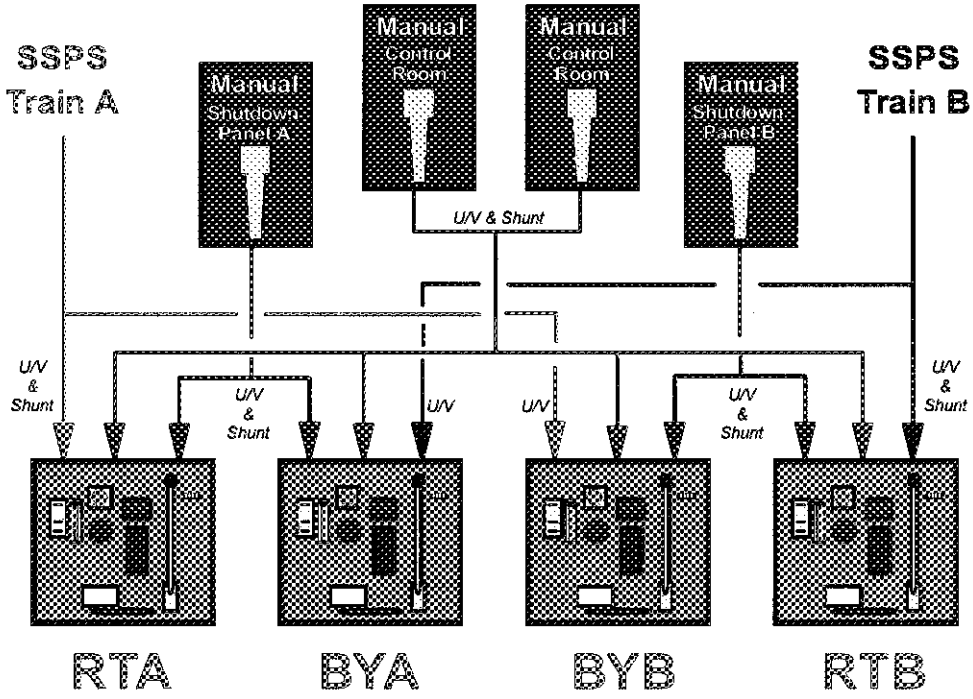

SECTION B

REACTOR TRIP AND ESFAS SIGNALS

28.11 PERMISSIVE INTERLOCKS

Permissive interlocks provide input to the protection systems to allow or prevent protective functions from occurring under certain plant conditions.

P-4 **Indicates reactor tripped**

Set point or conditions that give P-4

RTA and its bypass (BYA) both open give P-4 Train A
RTB and its bypass (BYB) both open give P-4 Train B

Function:

1) **Trips** the Main Turbine to limit the RCS cool down
   - P-4 Train A generates a "Mechanical Turbine Trip"
   - P-4 Train B generates an "Electrical Turbine Trip"
2) Steam Dumps
   - P-4 Train A generates a Steam Dump Arming signal
   - P-4 Train B transfers Steam Dump controllers from "Load reject" mode to the "Plant trip" mode
3) **F**eed **W**ater **I**solation (FWI)
   - P-4 in conjunction with Lo Tavg of 564°F
4) Seals in FWI if caused by a Safety Injection or Hi-Hi Steam Generator water level (P-14).
5) SI reset logic
   - After Safety Injection has been reset, P-4 blocks any future automatic safety injection signals.

P-6 **Source Range Block Permissive**

Set point:

2.0 x 10-5% POWER on any **1 / 2** IR NIS detector.

Function:

1) Allows the operator to manually block SR high flux trip.
   (both TRN A and TRN B switches, QMCB-C)
2) Loss of P-6 (either train no SSPS) will automatically unblock the Source Range Trip Permissive status light on BPLP (QMCB-C) Illuminates when P-6 is present.

P-6 Resets:

When 2/2 IR NIS detector drop < **7.0 X 10-6% POWER**

P-7 **Lo Power Trip Block**

Also known as the "At power trip permissive"

Set points - either of the following

1) ≥ **10%** turbine power **1 / 2** Turbine Impulse Pressure (P-13)

or

2) ≥ **10%** power on **2 / 4** Power Range NIS (P-10)

Functions:

Unblocks at power trips

1) Pressurizer low pressure
2) Pressurizer hi level
3) RCP undervoltage
4) RCP underfrequency
5) Two loop loss of flow trip

Permissive status light on BPLP goes out when P-7 is present

P-8 **1 Loop Lo Flow Trip Block**

Set points:

2 / 4 Power Range NIS ≥ **48%** power

P-9 **Turbine Trip / Reactor Trip Blocked**

Set points:

2 / 4 Power Range NIS ≥ **50%** power

Function:

Enables reactor trip when the main turbine trips because of the steam dumps and auto rod control capacity is limited to 50%.

Permissive status light on BPLP goes out when P-9 is present

P-10 **Power Range Permissive**

Set point:

2 / 4 PR NIS ≥ 10% power (resets at 8%)

Functions:

V-LO TX-28101

28.13 REACTOR TRIP SETPOINTS

The following is the list of reactor trips that you will have to commit to memory. The bases for the trips may vary so referencing the technical specification section 3.3.1 for each trip could be helpful.

Reactor Trips	Coincidence	Set point
1) **Manual reactor trip**	**1** out of **2** HS located on the main control board	
2) **Source Range high flux trip**	**1** out of **2** SR channels	**≥ 10⁵ CPS**

Bases: Provides protection against uncontrolled rod withdrawal while subcritical.

3) **Intermediate Range high flux trip**	**1** out of **2** IR channels	**≥ 25% power**

Bases: Provides protection against uncontrolled rod withdrawal while subcritical.

4) **Power Range low range high flux trip**	**2** out of **4** PR channels	**≥ 25% power**

Bases: Mitigates the consequences of power excursion starting from low power excursions starting at all power levels.

5) **Power Range high range high flux trip**	**2** out of **4** PR channels	**≥ 109% power**

Bases: Provides protection from power excursions starting at all power levels.

6) **Power Range high flux rate**	**2** out of **4** PR channels	**≥ 5% in 2 sec**

Bases: Provides protection from the power excursion caused from an ejected rod accident.

7) **Overtemperature ΔT Trip**	**2** out of **4** loop ΔT	**≥ 114.9% unpenalized setpoint**

The Set Point is variable based on its associated channel Pressurizer Pressure, Power Range Δ Flux, and Loop Tavg. When Pressurizer

ΔT = Measured Loop specific RCS differential temperature in °F (displayed in percent power 0% - 150% power)

K4 = Nominal set point of 109.5%

K5 = Modifier for Tavg change = 2% RTP per °F (penalty above 588.4°F)/ (**no reward** given to set point below 588.4°F

K6 = Modifier for Temperature = 0.177% per psig (penalty below 2235 psig)/(reward given to set point above 2235 psig)

T = measured loop specific RCS average temperature in °F

T' = indicated loop specific RCS average temperature at RTP, ≤588.4°F

f2 (AFD) = modifier for Axial Flux Difference (**No penalty for AFD**)

A reactor trip will occur if 2 out of the 4 loop ΔTs increase to the variable OPΔT set point.

Bases: Provides assurance of fuel integrity under overpower conditions by ensuring the allowable kW/ft heat generation rate is not exceeded (particularly under conditions of steam line break)

9) **High Pressurizer pressure trip** — **2** out of **4** channels — **≥ 2385 psig**

Bases: Protects against over pressurization of the RCS in conjunction with PROVs and Code Safety Valves.

10) **Low Pressurizer Pressure trip** — **2** out of **4** channels — **≤ 1960 psig**
enabled above P-7; ≥ 10% reactor power

Bases: Provides protection against DNB.

11) ~~**High Pressurizer level trip**~~ — ~~**2** out of **3** channels — **≥ 92% level**~~
~~**enabled above P-7; ≥ 10% reactor power**~~

Bases: Prevents water relief through the safeties.

12) **Single loop loss of flow** — **2** out of **3** channels — **≤ 90% flow**
1 out of **4** loops
enabled above P-8; ≥ 48% reactor power

Bases: Prevents DNB conditions resulting from loss of one or more reactor coolant pumps.

13) **Two loop loss of flow** — **2** out of **3** channels — **≤ 90% flow ****
2 out of **4** loops
enabled above P-7; ≥ 10% reactor power

Overview of the Nuclear Instrument "Protection Interlocks"

If the every trip set points remained valid during all phases of plant operation, power could never rise above the Source Range since the first reactor trip occurs at 10^5 CPS. Interlocks make it possible to block the trips from the Source & Intermediate Ranges and the 25 percent trip from the Power Range. The purpose of these low power trips is to protect the reactor from overpower on an uncontrolled startup. A combination of interlock bi-stables and manual operator action defeats these trips at an appropriate point in the reactor startup procedure.

The Solid State Protection System (SSPS) allows the operator to manually block a trip only when power has risen to a bistable set point that is lower than the trip set point. As long as power is rising slowly enough so that the operator can recognize that power has exceeded the protection interlock set point and then establish the block, the reactor will not trip. On the other hand, if power is rising too rapidly for both of these actions to be accomplished, the reactor trips at one of the three set points.

As an example, the 10^5 cps (1/2 channels) trip from the Source Range can only be blocked after receiving the P-6 interlock from the Intermediate Range (1/2 channels). Once there is indication that P-6 has occurred, the operator may then manually depress a momentary switch for each protection train which establishes the Source Range block. Before power rises above P-6, any attempt by the operator to manually block the source range high flux trip will be unsuccessful.

In addition to removing startup overpower protection, blocking the Source Range also ensures that overlap exists between it and the Intermediate Range. Since P-6 is generated by the Intermediate Range, the Intermediate Range indication must move up-scale prior to reaching 10^5 cps in the Source Range.

In order to block the Intermediate Range "High Flux Trip" (25 percent power), the operator must first receive the P-10 interlock from the Power Range (set at 10 percent), ensuring overlap between the Intermediate and Power Ranges. P-10 is used to block the Power Range "High Flux Low Trip Set point" as well. The Power Range "High Flux High Set point" (109%), the positive rate, and the OTΔT Trips cannot be blocked because they are absolute limits which must not be exceeded. Another permissive is interlock P-9. P-9 automatically blocks a reactor trip from SSPS when the main turbine trips below 50 percent power.

One other protection interlock is generated by the NIS, P-8. It is used elsewhere in the plant for loss of reactor coolant flow protection. P-8 allows a reactor trip from the SSPS if one coolant loop loses flow and reactor power is greater than 48 percent. If power is less than 48 percent (P-8), a single loop loss of flow will not cause an automatic Reactor Trip.

V-LO-TX-17201

SYSTEM POWER SOURCES

The Gamma-Metrics Neutron Flux Monitoring System power is train separated just like all other safety related protection grade systems in the plant. The N31/35 train is powered from (1/2)AY1A, breaker 3 is **"Control Power"** while Breaker 6 is **"Instrument Power"** to the Main Control Room Signal Processor.

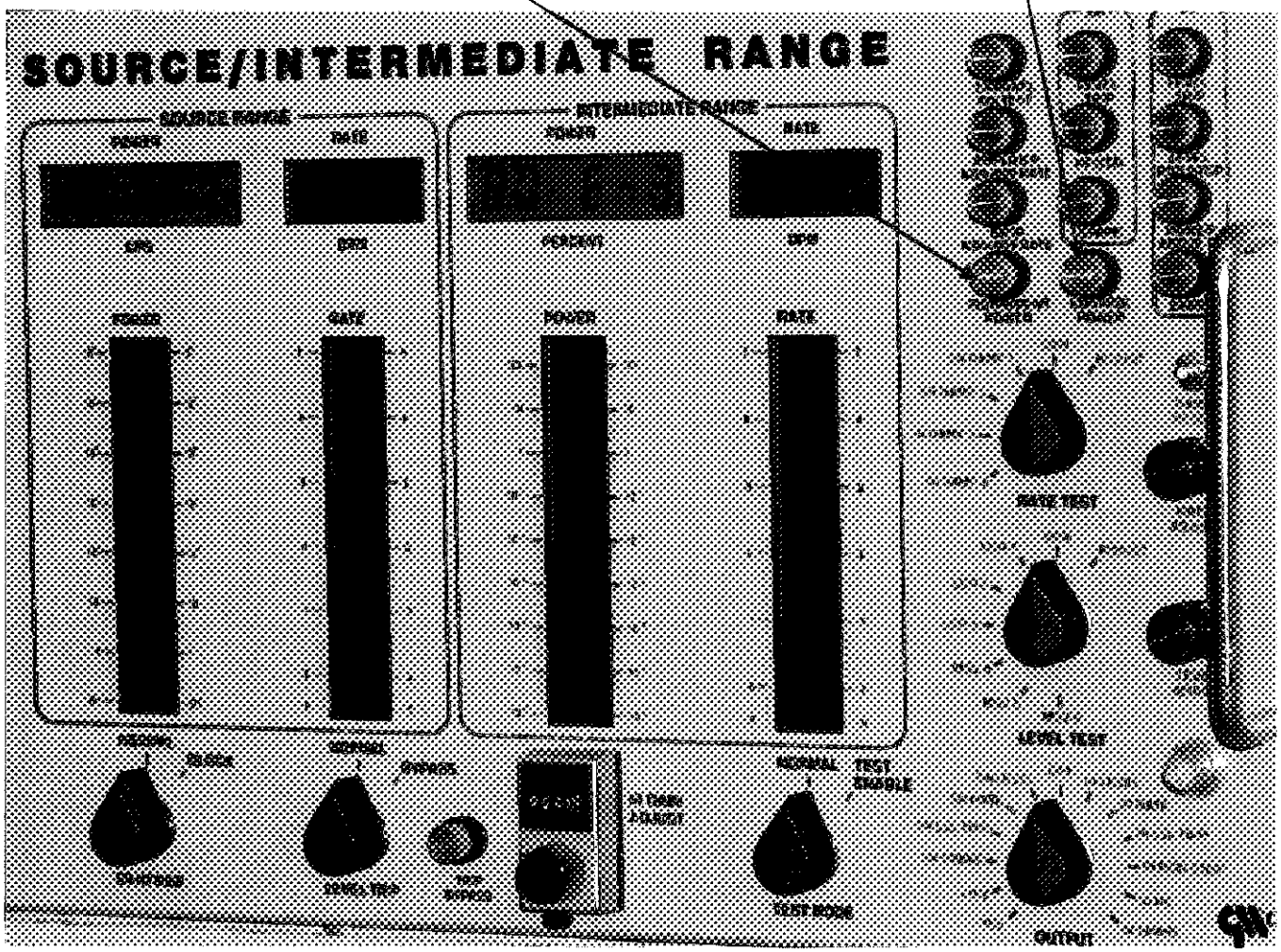

Back of Signal Processor

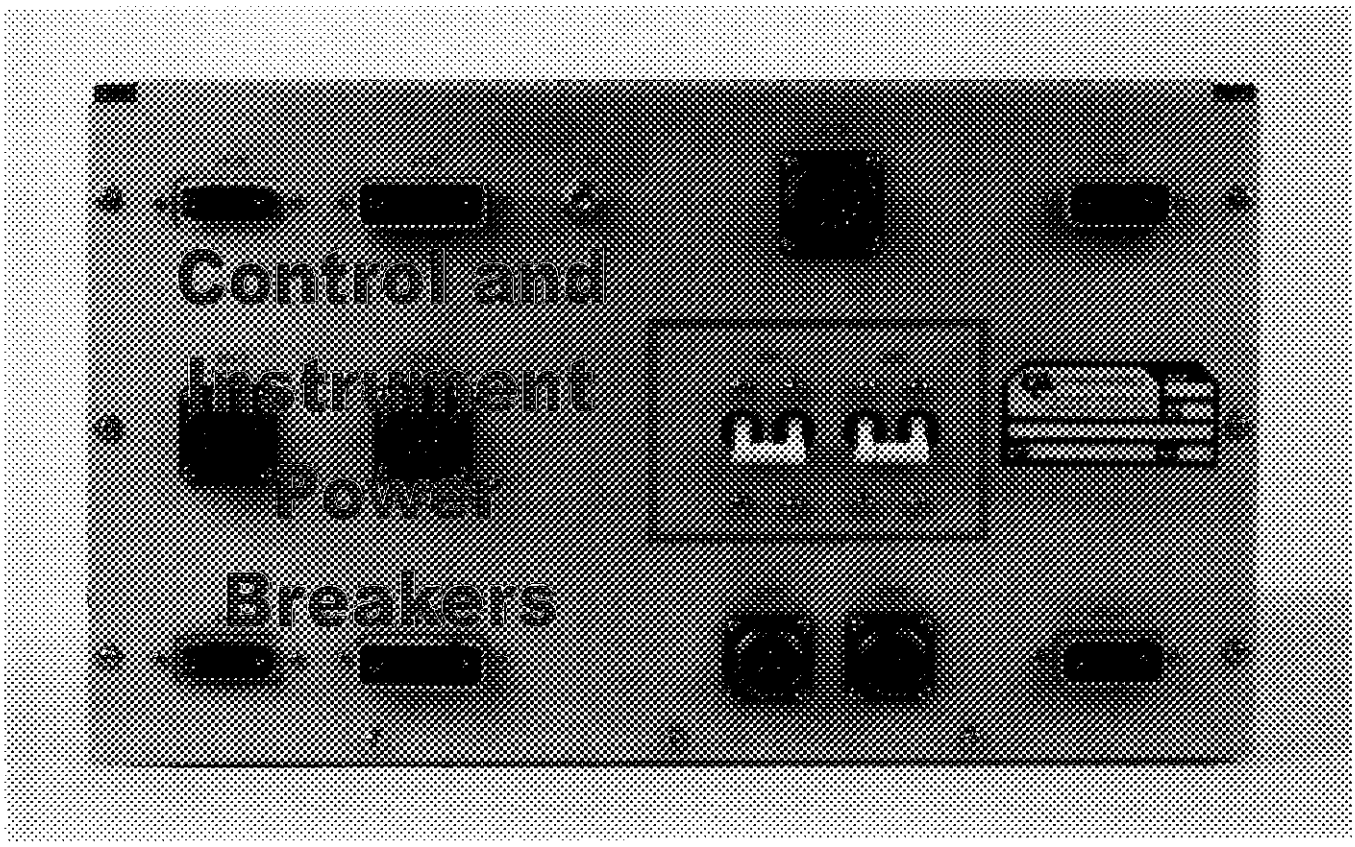

(1/2)AY1A Breaker 12 powers the Wide Range Amplifier.

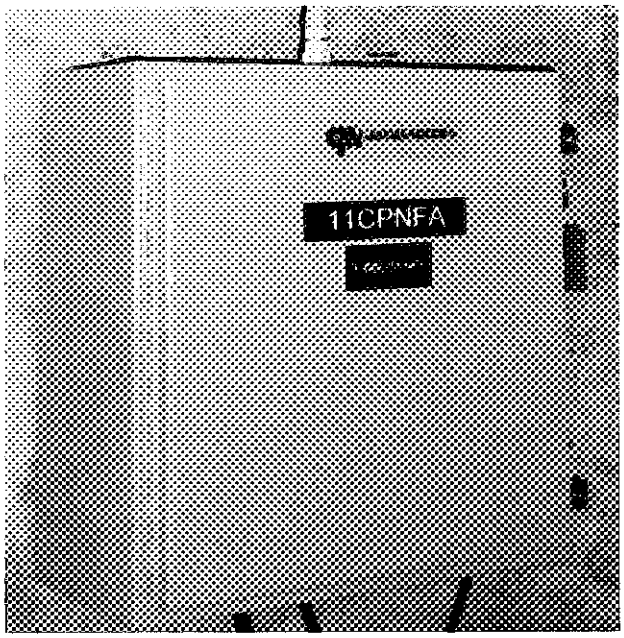

The N32/36 train including the Optical Isolator Assembly is powered from (1/2)BY1B, breaker 3 is "Control Power" while Breaker 6 is "Instrument Power" to the Main Control Room Signal Processor. (1/2)BY1B Breaker 12 powers both the Wide Range Amplifier and the Optical Isolator (Train "B" ONLY).

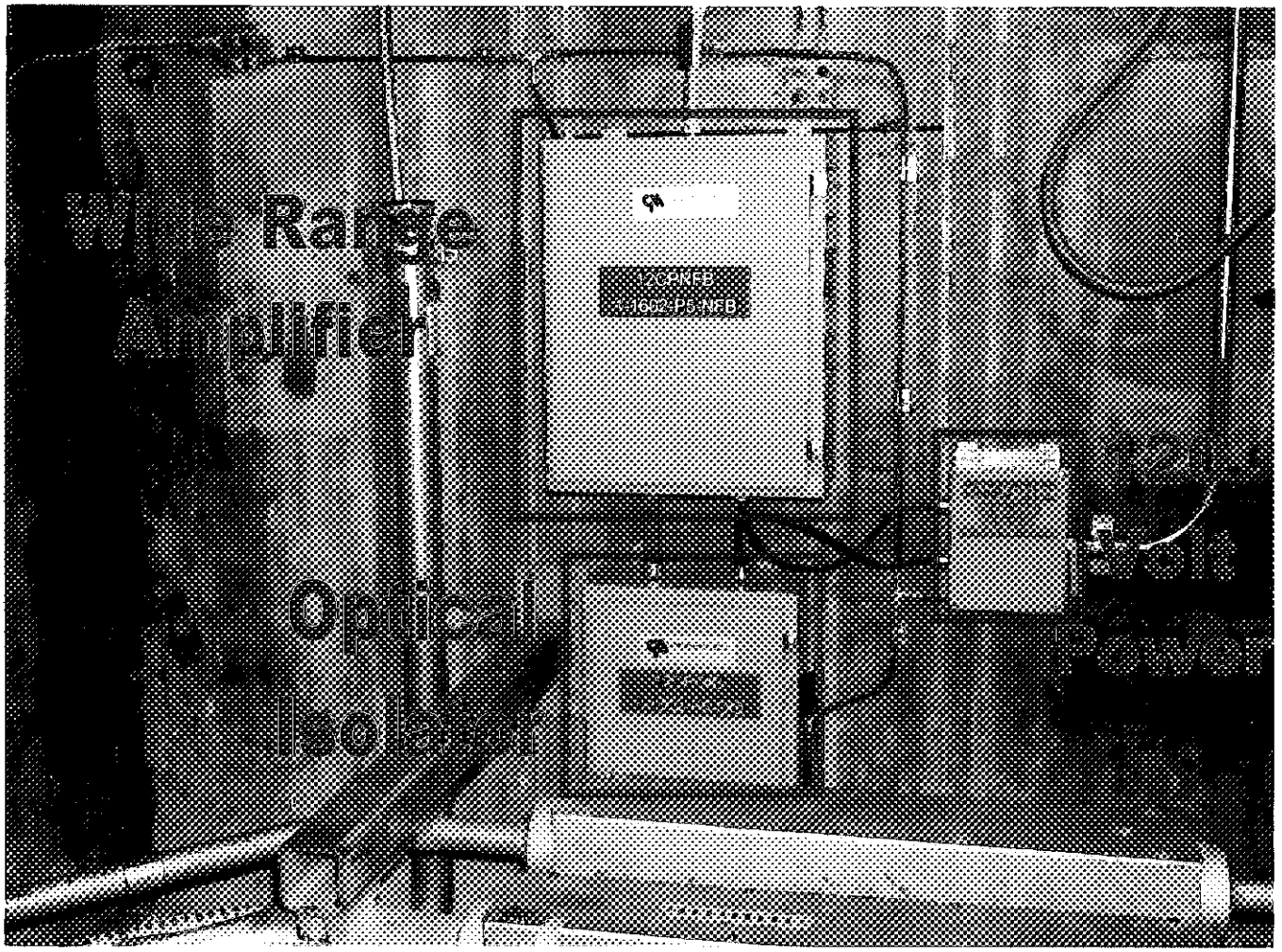

The Appendix R Signal Processor is powered from (1/2)BY2B, breaker 21.

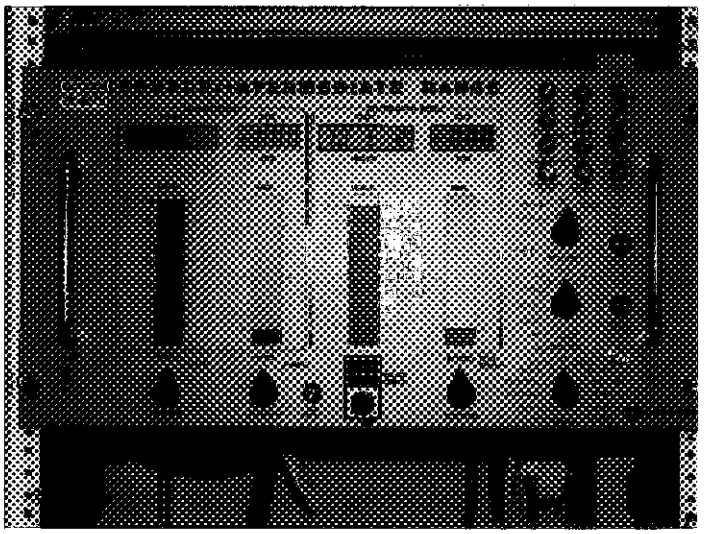

Response to loss of power:

a. BELOW P-10 POWER LEVEL
Loss of Inst. Power = Reactor Trip
Loss of Cont. Power = Reactor Trip

b. ABOVE P-10 POWER LEVEL, NOT BLOCKED
- Loss of Inst. Power = Reactor Trip
- Loss of Cont. Power = Reactor Trip

c. ABOVE P-10 POWER LEVEL, BLOCKED
- Loss of Inst. Power = No Reactor Trip
- Loss of Control Power = No Reactor Trip

d. BELOW P-6 POWER LEVEL
- Loss of Inst. Power = Reactor Trip
- Loss of Cont. Power = Reactor Trip

e. ABOVE P-6 POWER LEVEL BLOCKED
- Loss of Inst. Power = Reactor Trip
- Loss of Cont. Power = Reactor Trip

f. ABOVE P-6 POWER LEVEL NOT BLOCKED
- Loss of Inst. Power = Reactor Trip
- Loss of Control Power = Reactor Trip

SSPS Input Relays

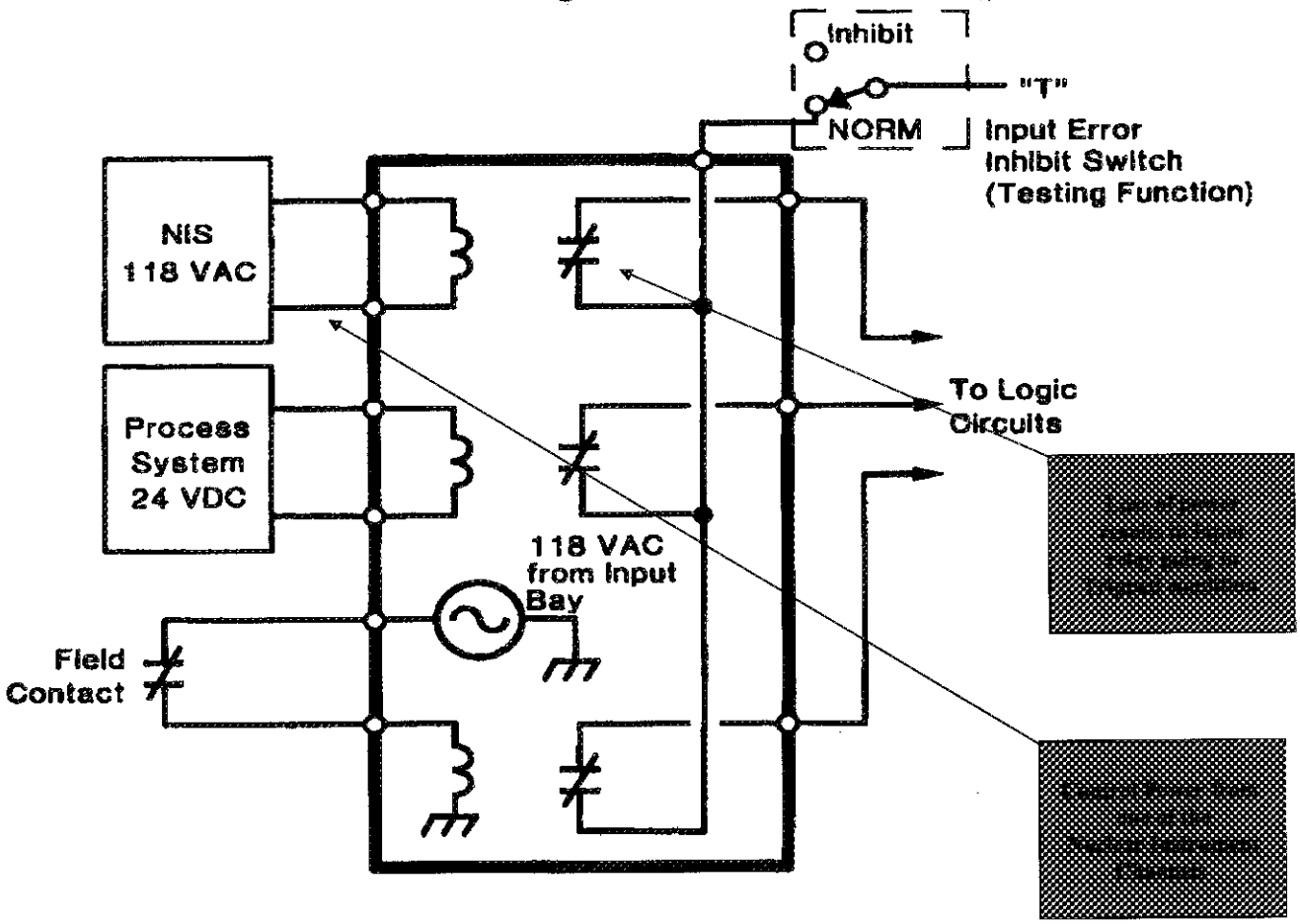

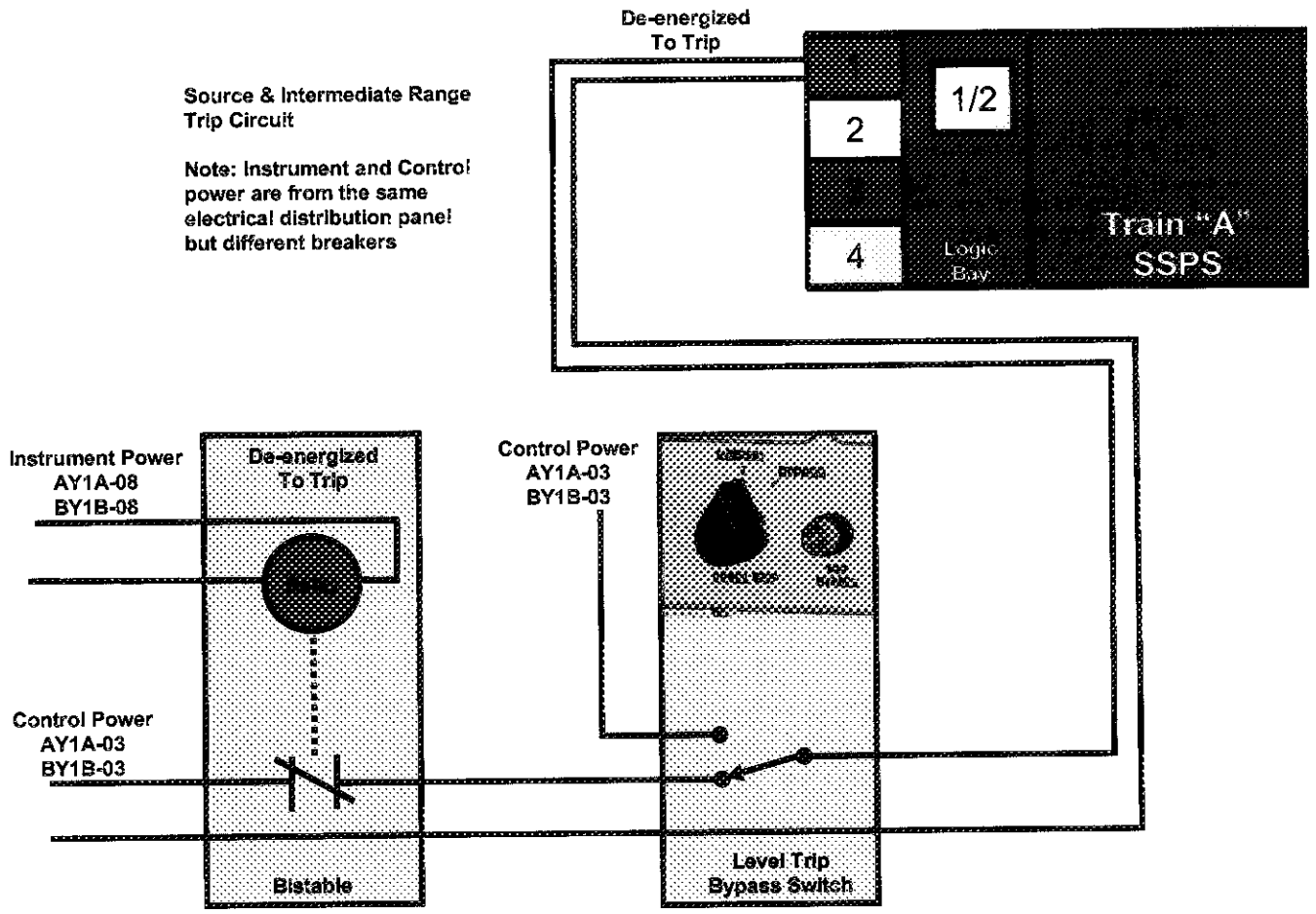

Questions:

1. Why an ordinary ion chamber is not particularly neutron sensitive yet a fission type of ion chamber is neutron sensitive.

2. How are current pulses produced by gamma radiation eliminated from being counted at low power level operation of the Gamma Metrics Neutron Flux Monitor?

3. Why can't the pulse counting mode of flux monitoring be used throughout the entire range of the Gamma Metrics Neutron Flux Monitor?

4. Why measurement error is caused by gamma radiation not a problem at low power levels in the Cambelling range of operation?

5. What is the general location of the Gamma Metrics Neutron Flux Monitor detectors?

6. What are the major component differences between Source & Intermediate Range channels N31/N35 and N32/N36?

7. What information is shown on the digital and bargraph displays on the front of the SR/IR signal processor?

8. What is the source of A.C. power for each part of the Gamma-Metrics System (NFMS)?

During startup or shutdown operations, the operators can expect the overlap between the Source & Intermediate Range nuclear instruments to be approximately 2½ decays.

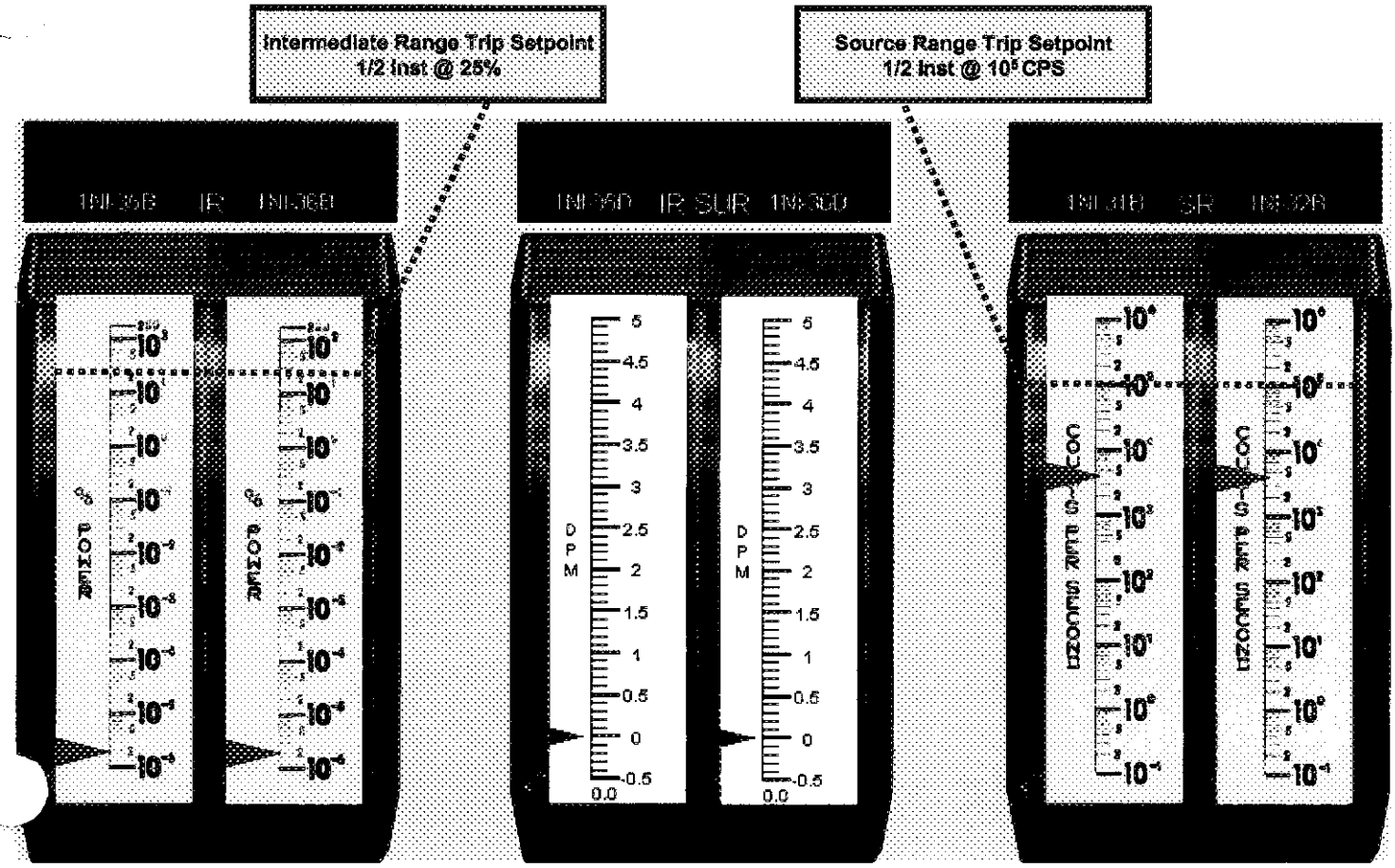

The picture above illustrates the overlap between the Source & Intermediate Range Nuclear Instruments.

V-LO-TA-117201
Source & Intermediate Range
Nuclear Instruments .doc

V. C. Summer Nuclear Station

On October 30, 1987, at 0903 hours with the plant in Mode 3 and the shutdown banks withdrawn, a reactor trip occurred and both sets of shutdown banks inserted due to the loss of power to a source range nuclear instrumentation drawer. This loss of power occurred when the wrong type of light bulbs were inserted in both the instrument and control power status indicating lights in one of the source range drawers in the Control Room. The incorrect light bulbs caused both the instrument and control power fuses to blow when the light bulb holder assembly was reinserted. Subsequent investigations determined that the original bulbs were neon type bulbs with an infinite resistance, while the bulbs used as replacements - though similar looking - were incandescent type bulbs with an ohmic value of approximately 176 ohms. To prevent recurrence, the Licensee is developing a program to address changeout of light bulbs in the Control Room.

INDIAN POINT, UNIT 3

Immediately after a unit trip on November 30, 1985, (reported in LER) source range nuclear instrumentation (SR) channel 31 failed to reenergize when the reactor neutron flux had dropped below the P-6 permissive setpoint. Redundant S R channel 32 re-energized as required. Instrument and Controls (I&C) technicians were instructed to investigate and correct the malfunction of channel 31. While in the process of investigating the problem, the technicians removed the control power fuses from SR channel 31, de-energizing reactor trip delay 31D-X, thereby causing a reactor trip. At the time of the trip, the reactor was subcritical with shutdown rod banks withdrawn. The failure to re-energize was traced to a loose connection in SR 31, which was repaired.

Similar to Question.

49. 064G2.2.23 001

Which ONE of the following correctly describes required actions of Technical Specification LCO 3.8.1 (AC Sources - Operating; Modes 1, 2, 3, and 4) Action Statement B (One DG Inoperable)?

A. Suspend fuel movements in the Spent Fuel Pool immediately and verify SAT available within 1 hour.

B. ✓ Verify correct breaker alignment for each required offsite source within 1 hour and verify SAT available within 1 hour.

C. Initiate action to suspend the operations involving reactivity additions immediately and verify SAT available within 1 hour.

D. Verify indicated power available for each required offsite circuit within 1 hour and suspend fuel movements in the Spent Fuel Pool immediately.

K/A
064 Emergency Diesel Generator
G2.2.23 Ability to track limiting conditions for operations.

K/A MATCH ANALYSIS
K/A is met because the question tests the applicant's knowledge of one hour or less Tech Spec LCOs.

ANSWER / DISTRACTOR ANALYSIS
A. Incorrect. SFP fuel moves do not need to be suspended. Plausible because TS 3.8.10 contains the requirement to suspend irradiated fuel moves. Also, verifying SAT available is correct. (Partially correct distractor)
B. Correct. Plant is in Mode 4 (Tavg > 200 °F). TS 3.8.1 Action B provides the info for the correct answer.
C. Incorrect. Boration does not need to be suspended. Plausible because TS 3.8.10 contains the requirement to suspend positive reactivity additions. Also, verifying SAT available is correct. (Partially correct distractor)
D. Incorrect. SFP fuel moves do not need to be suspended. Plausible because TS 3.8.10 contains the requirement to suspend irradiated fuel moves. Also, verifying indicated power available for each required offsite circuit is correct. (Partially correct distractor)

REFERENCES
1. Techincal Specification Table 1.1-1, "Modes"
2. Techincal Specification 3.8.1, "AC Sources - Operating"
3. Techincal Specification 3.8.2, "AC Sources - Shutdown"
4. Techincal Specification 3.8.10, "Distribution Systems - Shutdown"

MCS Time: 1 Points: 1.00 Version: 0 1 2 3 4 5 6 7 8 9
Answer: B D A D B C D A B C Scramble Range: A - D

QUESTIONS REPORT
for VogIte 2005-301 Draft

Tier:	2	Group:	1
Key Word:	EDG TECH SPEC TS	Cog Level:	MEM 2.6
Source:	N	Exam:	VG05301
Test:	R	Author/Reviewer:	MAB/RSB

49. 064G2.2.23 001

Which ONE of the following correctly describes required actions of Technical Specification LCO 3.8.1 (AC Sources - Operating; Modes 1, 2, 3, and 4) Action Statement B (One DG Inoperable)?

A. Suspend fuel movements in the Spent Fuel Pool immediately and verify SAT available within 1 hour.

B. Verify correct breaker alignment for each required offsite source within 1 hour and verify SAT available within 1 hour.

C. Initiate action to suspend the operations involving reactivity additions immediately and verify SAT available within 1 hour.

D. Verify indicated power available for each required offsite circuit within 1 hour and suspend fuel movements in the Spent Fuel Pool immediately.

K/A
064 Emergency Diesel Generator
G2.2.23 Ability to track limiting conditions for operations.

K/A MATCH ANALYSIS
K/A is met because the question tests the applicant's knowledge of one hour or less Tech Spec LCOs.

ANSWER / DISTRACTOR ANALYSIS
A. Incorrect. SFP fuel moves do not need to be suspended. Plausible because TS 3.8.10 contains the requirement to suspend irradiated fuel moves. Also, verifying SAT available is correct. (Partially correct distractor)
B. Correct. Plant is in Mode 4 (Tavg > 200 °F). TS 3.8.1 Action B provides the info for the correct answer.
C. Incorrect. Boration does not need to be suspended. Plausible because TS 3.8.10 contains the requirement to suspend positive reactivity additions. Also, verifying SAT available is correct. (Partially correct distractor)
D. Incorrect. SFP fuel moves do not need to be suspended. Plausible because TS 3.8.10 contains the requirement to suspend irradiated fuel moves. Also, verifying indicated power available for each required offsite circuit is correct. (Partially correct distractor)

REFERENCES
1. Techincal Specification Table 1.1-1, "Modes"
2. Techincal Specification 3.8.1, "AC Sources - Operating"
3. Techincal Specification 3.8.2, "AC Sources - Shutdown"
4. Techincal Specification 3.8.10, "Distribution Systems - Shutdown"

MCS Time: 1 Points: 1.00 Version: 0 1 2 3 4 5 6 7 8 9
Answer: B D A D B C D A B C Scramble Range: A - D

QUESTIONS REPORT
for VogIte 2005-301 Draft

Tier:	2	Group:	1
Key Word:	EDG TECH SPEC TS	Cog Level:	MEM 2.6
Source:	N	Exam:	VG05301
Test:	R	Author/Reviewer:	MAB/RSB

1. 064G2.2.23 001

Which ONE of the following correctly describes required actions of Technical Specification LCO 3.8.1 (AC Sources - Operating; Modes 1, 2, 3, and 4) Action Statement B (One DG Inoperable)?

A. Suspend fuel movements in the Spent Fuel Pool immediately and verify SAT available within 1 hour.

B. Verify correct breaker alignment for each required offsite source within 1 hour and verify SAT available within 1 hour.

C. Initiate action to suspend the operations involving reactivity additions immediately and verify SAT available within 1 hour.

D. Verify indicated power available for each required offsite circuit within 1 hour and suspend fuel movements in the Spent Fuel Pool immediately.

K/A
064 Emergency Diesel Generator
G2.2.23 Ability to track limiting conditions for operations.

K/A MATCH ANALYSIS
K/A is met because the question tests the applicant's knowledge of one hour or less Tech Spec LCOs.

ANSWER / DISTRACTOR ANALYSIS
A. Incorrect. SFP fuel moves do not need to be suspended. Plausible because TS 3.8.10 contains the requirement to suspend irradiated fuel moves. Also, verifying SAT available is correct. (Partially correct distractor)
B. Correct. Plant is in Mode 4 (Tavg > 200 °F). TS 3.8.1 Action B provides the info for the correct answer.
C. Incorrect. Boration does not need to be suspended. Plausible because TS 3.8.10 contains the requirement to suspend positive reactivity additions. Also, verifying SAT available is correct. (Partially correct distractor)
D. Incorrect. SFP fuel moves do not need to be suspended. Plausible because TS 3.8.10 contains the requirement to suspend irradiated fuel moves. Also, verifying indicated power available for each required offsite circuit is correct. (Partially correct distractor)

REFERENCES
1. Techincal Specification Table 1.1-1, "Modes"
2. Techincal Specification 3.8.1, "AC Sources - Operating"
3. Techincal Specification 3.8.2, "AC Sources - Shutdown"
4. Techincal Specification 3.8.10, "Distribution Systems - Shutdown"

MCS Time: 1 Points: 1.00 Version: 0 1 2 3 4 5 6 7 8 9
Answer: B D A D B C D A B C Scramble Range: A - D

QUESTIONS REPORT
for VogIte 2005-301 Draft

Tier:	2	Group:	1
Key Word:	EDG TECH SPEC TS	Cog Level:	MEM 2.6
Source:	N	Exam:	VG05301
Test:	R	Author/Reviewer:	MAB/RSB

Table 1.1-1 (page 1 of 1)
MODES

MODE	TITLE	REACTIVITY CONDITION (k_{eff})	% RATED THERMAL POWER[a]	AVERAGE REACTOR COOLANT TEMPERATURE (°F)
1	Power Operation	≥ 0.99	> 5	NA
2	Startup	≥ 0.99	≤ 5	NA
3	Hot Standby	< 0.99	NA	≥ 350
4	Hot Shutdown[b]	< 0.99	NA	350 > T_{avg} > 200
5	Cold Shutdown[b]	< 0.99	NA	≤ 200
6	Refueling[c]	NA	NA	NA

(a) Excluding decay heat.

(b) All reactor vessel head closure bolts fully tensioned.

(c) One or more reactor vessel head closure bolts less than fully tensioned.

3.8 ELECTRICAL POWER SYSTEMS

3.8.1 AC Sources - Operating

LCO 3.8.1 The following AC electrical sources shall be OPERABLE:

a. Two qualified circuits between the offsite transmission network and the onsite Class 1E AC Electrical Power Distribution System; and

b. Two diesel generators (DGs) capable of supplying the onsite Class 1E power distribution subsystem(s).

Automatic load sequencers for Train A and Train B ESF buses shall be OPERABLE.

APPLICABILITY: MODES 1, 2, 3, and 4.

ACTIONS

CONDITION	REQUIRED ACTION	COMPLETION TIME
A. One required offsite circuit inoperable.	A.1 Perform SR 3.8.1.1 for required OPERABLE offsite circuit. AND	1 hour AND Once per 8 hours thereafter (continued)

ACTIONS

CONDITION	REQUIRED ACTION		COMPLETION TIME
A. (continued)	A.2	Declare required feature(s) with no offsite power available inoperable when its redundant required feature(s) is inoperable.	24 hours from discovery of no offsite power to one train concurrent with inoperability of redundant required feature(s)
	AND		
	A.3	Restore required offsite circuit to OPERABLE status.	72 hours AND 14 days from discovery of failure to meet LCO

(continued)

ACTIONS (continued)

CONDITION	REQUIRED ACTION		COMPLETION TIME
B. One DG inoperable.	B.1	Perform SR 3.8.1.1 for the required offsite circuit(s).	1 hour AND Once per 8 hours thereafter
	AND		
	B.2	Verify SAT available.	1 hour AND Once per 12 hours thereafter
	AND		
	B.3	Declare required feature(s) supported by the inoperable DG inoperable when its required redundant feature(s) is inoperable.	4 hours from discovery of Condition B concurrent with inoperability of redundant required feature(s)
	AND		
	B.4.1	Determine OPERABLE DG is not inoperable due to common cause failure.	24 hours
	OR		
	B.4.2	Perform SR 3.8.1.2 for OPERABLE DG.	24 hours
	AND		
			(continued)

ACTIONS

CONDITION	REQUIRED ACTION	COMPLETION TIME
B. (continued)	----------NOTE---------- Required Action B.5.1 is only applicable if the combined reliability of the enhanced black-start combustion turbine generators (CTG) and the black-start diesel generator is ≥ 95%. Otherwise, Required Action B.5.2 applies. ----------	
	B.5.1 Verify an enhanced black-start CTG is functional by verifying the CTG and the black-start diesel generator starts and achieves steady state voltage and frequency.	72 hours OR Within 72 hours prior to entry into Condition B
	OR	
	B.5.2 Start and run at least one CTG while in Condition B.	72 hours OR Prior to entry into Condition B for preplanned maintenance
	AND	(continued)

ACTIONS

CONDITION	REQUIRED ACTION		COMPLETION TIME
B. (continued)	B.6	Restore DG to OPERABLE status.	14 days from discovery of failure to meet LCO
C. Required Actions B.2, B.5.1, or B.5.2 and associated Completion Times not met.	C.1	Restore DG to OPERABLE status.	72 hours
D. Two required offsite circuits inoperable.	D.1	Declare required feature(s) inoperable when its redundant feature(s) is inoperable.	12 hours from discovery of Condition D concurrent with inoperability of redundant required features
	AND		
	D.2	Restore one required offsite circuit to OPERABLE status	24 hours
E. One required offsite circuit inoperable. AND One DG inoperable.	----------NOTE---------- Enter applicable Conditions and Required Actions of LCO 3.8.9, "Distribution Systems - Operating," when Condition E is entered with no AC power source to one or more trains. ----------		(continued)

ACTIONS (continued)

CONDITION	REQUIRED ACTION		COMPLETION TIME
E. (continued)	E.1	Restore required offsite circuit to OPERABLE status.	12 hours
	OR		
	E.2	Restore DG to OPERABLE status.	12 hours
F. Two DGs inoperable.	F.1	Restore one DG to OPERABLE status.	2 hours
G. One automatic load sequencer inoperable.	G.1	Restore automatic load sequencer to OPERABLE status.	12 hours
H. Required Action and associated Completion Time of Condition A, C, D, E, F, or G not met. OR Required Action B.1, B.3, B.4.1, B.4.2, or B.6 and associated Completion Time not met.	H.1	Be in MODE 3.	6 hours
	AND		
	H.2	Be in MODE 5.	36 hours
I. Three or more required AC sources inoperable.	I.1	Enter LCO 3.0.3.	Immediately

SURVEILLANCE REQUIREMENTS

SURVEILLANCE		FREQUENCY
SR 3.8.1.1	Verify correct breaker alignment and indicated power availability for each required offsite circuit.	7 days
SR 3.8.1.2	----------NOTES---------- 1. Performance of SR 3.8.1.7 satisfies this SR. 2. All DG starts may be preceded by an engine prelube period and followed by a warmup period prior to loading. 3. A modified DG start involving idling and gradual acceleration to synchronous speed may be used for this SR as recommended by the manufacturer. When modified start procedures are not used, the time, voltage, and frequency tolerances of SR 3.8.1.7 must be met. ----------	
	Verify each DG starts from standby conditions and achieves steady state voltage ≥ 4025 V and ≤ 4330 V, and frequency ≥ 58.8 Hz and ≤ 61.2 Hz.	31 days

(continued)

3.8 ELECTRICAL POWER SYSTEMS

3.8.2 AC Sources – Shutdown

LCO 3.8.2 The following AC electrical power sources shall be OPERABLE:

a. One qualified circuit between the offsite transmission network and the onsite Class 1E AC electrical power distribution subsystem(s) required by LCO 3.8.10, "Distribution Systems - Shutdown"; and

b. One diesel generator (DG) capable of supplying one train of the onsite Class 1E AC electrical power distribution subsystem(s) required by LCO 3.8.10.

APPLICABILITY: MODES 5 and 6

ACTIONS

CONDITION	REQUIRED ACTION	COMPLETION TIME
A. One required offsite circuit inoperable.	----------NOTE---------- Enter applicable Conditions and Required Actions of LCO 3.8.10, with one required train de-energized as a result of Condition A. ----------	
	A.1 Declare affected required feature(s) with no offsite power available inoperable.	Immediately
	OR	
	A.2.1 Suspend CORE ALTERATIONS.	Immediately
	AND	
		(continued)

ACTIONS

CONDITION	REQUIRED ACTION	COMPLETION TIME
A. (continued)	A.2.2 Suspend movement of irradiated fuel assemblies.	Immediately
	AND	
	A.2.3 Initiate action to suspend operations involving positive reactivity additions.	Immediately
	AND	
	A.2.4 Initiate action to restore required offsite power circuit to OPERABLE status.	Immediately
B. One required DG inoperable.	B.1 Suspend CORE ALTERATIONS.	Immediately
	AND	
	B.2 Suspend movement of irradiated fuel assemblies.	Immediately
	AND	
	B.3 Initiate action to suspend operations involving positive reactivity additions.	Immediately
	AND	
	B.4 Initiate action to restore required DG to OPERABLE status.	Immediately

SURVEILLANCE REQUIREMENTS

SURVEILLANCE		FREQUENCY
SR 3.8.2.1	----------NOTE---------- The following SRs are applicable but not required to be performed: SR 3.8.1.3 SR 3.8.1.8 SR 3.8.1.9 SR 3.8.1.10 (except 3.8.1.10.c.2) SR 3.8.1.13 SR 3.8.1.14 SR 3.8.1.15 SR 3.8.1.19 ----------	
	For AC sources required to be OPERABLE, the following SRs of Specification 3.8.1 are applicable: SR 3.8.1.1 SR 3.8.1.2 SR 3.8.1.3 (see Note) SR 3.8.1.4 SR 3.8.1.5 SR 3.8.1.6 SR 3.8.1.7 SR 3.8.1.8 (see Note) SR 3.8.1.9 (see Note) SR 3.8.1.10 (except 3.8.1.10.c2) (see Note) SR 3.8.1.13 (see Note) SR 3.8.1.14 (see Note) SR 3.8.1.15 (see Note) SR 3.8.1.19 (see Note)	In accordance with applicable SRs

3.8 ELECTRICAL POWER SYSTEMS

3.8.9 Distribution Systems – Operating

LCO 3.8.9 The required AC, DC, and AC vital bus electrical power distribution subsystems shall be OPERABLE.

----------NOTE----------
The redundant emergency buses of 4160 V switchgear 1/2AAO2 and 1/2BAO3 may be manually connected within the unit by tie breakers in order to allow transfer of preferred offsite power sources provided SR 3.8.1.1 is successfully performed within 12 hours prior to the interconnection. The interconnection shall be implemented without adversely impacting the ability to simultaneously sequence both trains of LOCA loads.

APPLICABILITY: MODES 1, 2, 3, and 4.

ACTIONS

CONDITION	REQUIRED ACTION	COMPLETION TIME
A. One or more AC electrical power distribution subsystems inoperable.	A.1 Restore AC electrical power distribution subsystems to OPERABLE status.	8 hours AND 16 hours from discovery of failure to meet LCO
B. One or more AC vital bus electrical power distribution subsystems inoperable.	B.1 Restore AC vital bus electrical power distribution subsystems to OPERABLE status.	2 hours AND 16 hours from discovery of failure to meet LCO

(continued)

ACTIONS (continued)

CONDITION	REQUIRED ACTION	COMPLETION TIME
C. One or more DC electrical power distribution subsystems inoperable.	C.1 Restore DC electrical power distribution subsystems to OPERABLE status.	2 hours AND 16 hours from discovery of failure to meet LCO
D. Required Action and associated Completion Time not met.	D.1 Be in MODE 3. AND D.2 Be in MODE 5.	6 hours 36 hours
E. Two or more electrical power distribution subsystems inoperable that result in a loss of function.	E.1 Enter LCO 3.0.3.	Immediately

SURVEILLANCE REQUIREMENTS

SURVEILLANCE		FREQUENCY
SR 3.8.9.1	Verify correct breaker alignments and voltage to required AC, DC, and AC vital bus electrical power distribution subsystems.	7 days

3.8 ELECTRICAL POWER SYSTEMS

3.8.10 Distribution Systems – Shutdown

LCO 3.8.10 The necessary portion of AC, DC, and AC vital bus electrical power distribution subsystems shall be OPERABLE to support equipment required to be OPERABLE.

APPLICABILITY: MODES 5 and 6

ACTIONS

CONDITION	REQUIRED ACTION	COMPLETION TIME
A. One or more required AC, DC, or AC vital bus electrical power distribution subsystems inoperable.	A.1 Declare associated supported required feature(s) inoperable.	Immediately
	OR	
	A.2.1 Suspend CORE ALTERATIONS.	Immediately
	AND	
	A.2.2 Suspend movement of irradiated fuel assemblies.	Immediately
	AND	
	A.2.3 Initiate action to suspend operations involving positive reactivity additions.	Immediately
	AND	
		(continued)

ACTIONS

CONDITION	REQUIRED ACTION	COMPLETION TIME
A. (continued)	A.2.4 Initiate actions to restore required AC, DC, and AC vital bus electrical power distribution subsystems to OPERABLE status.	Immediately
	AND	
	A.2.5 Declare associated required residual heat removal subsystem(s) inoperable and not in operation.	Immediately

SURVEILLANCE REQUIREMENTS

SURVEILLANCE		FREQUENCY
SR 3.8.10.1	Verify correct breaker alignments and voltage to required AC, DC, and AC vital bus electrical power distribution subsystems.	7 days

50. 065AA1.03 001

Unit 1 has the following conditions:

- An inadvertent SI has occurred.
- The SI signal has not yet been reset.
- 1HV-9378, Instrument Air to Containment, is shut.

Which ONE of the following describes the reason for 1HV-9378 being shut and the actions required to restore instrument air to containment?

A. 1HV-9378 went shut due to a CVI signal caused by the SIS. To open 1HV-9378, the SIS must be reset which will then allow the CVI to be reset allowing the valve to be reopened using the QMCB handswitch.

B. 1HV-9378 went shut due to a CIA signal caused by the SIS. The SIS must be reset to allow CIA to be reset. After CIA is reset, 1HV-9378 can be opened from the QMCB.

C. 1-HV-9378 went shut as a direct result of the SIS. The only way to open the valve is to locally open the valve using the handwheel OR reset SI and then open 1HV-9378 from the QMCB.

D. 1HV-9378 went shut due to a CIA signal caused by the SIS. The CIA can be reset without resetting SI and then open 1HV-9378 from the main control board.

K/A
065 Loss of Instrument Air
AA1.03 Ability to operate and/or monitor the following as they apply to Loss of Instrument Air: Restoration of systems served by instrument air when pressure is regained.

K/A MATCH ANALYSIS
Question tests knowledge needed to have the ability to restore instrument air to containment following a loss of instrument air due to CIA.

ANSWER / DISTRACTOR ANALYSIS
A. Incorrect. 9378 closes due to CIA. Plausible because CVI and CIA are both caused by an SIS.
B. Incorrect. SIS does not need to be reset prior to reset of CIA. Plausible because it is logical to assume that the initiating signal would first need to be reset.
C. Incorrect. SIS does not directly cause 9378 to close. Plausible because manual operation is possible and 9378 does close following an SIS, but not as a direct result of SIS.
D. Correct. See referenced LP.

REFERENCES
1. V-LO-TX-28101, RPS-SSPS-AMSAC, Rev. 3.
2. P&ID 1X4DB186-4, Instrument Air System Containment Building, Rev. 12.
3. Voglt Bank Question LO-LP-02110-14-01.

MCS	Time: 1	Points: 1.00	Version:	0 1 2 3 4 5 6 7 8 9			
			Answer:	D D C D A C A B C A		Scramble Range: A - D	
Tier:	1			Group:	1		
Key Word:	INSTRUMENT AIR			Cog Level:	MEM 2.9		
Source:	B			Exam:	VG05301		
Test:	R			Author/Reviewer:	MAB/RSB		

50. 065AA1.03 001

Unit 1 has the following conditions:

- An inadvertent SI has occurred.
- The SI signal has not yet been reset.
- 1HV-9378, Instrument Air to Containment, is shut.

Which ONE of the following describes the reason for 1HV-9378 being shut and the actions required to restore instrument air to containment?

A. 1HV-9378 went shut due to a CVI signal caused by the SIS. To open 1HV-9378, the SIS must be reset which will then allow the CVI to be reset allowing the valve to be reopened using the QMCB handswitch.

B. 1HV-9378 went shut due to a CIA signal caused by the SIS. The SIS must be reset to allow CIA to be reset. After CIA is reset, 1HV-9378 can be opened from the QMCB.

C. 1-HV-9378 went shut as a direct result of the SIS. The only way to open the valve is to locally open the valve using the handwheel OR reset SI and then open 1HV-9378 from the QMCB.

D. 1HV-9378 went shut due to a CIA signal caused by the SIS. The CIA can be reset without resetting SI and then open 1HV-9378 from the main control board.

K/A
065 Loss of Instrument Air
AA1.03 Ability to operate and/or monitor the following as they apply to Loss of Instrument Air: Restoration of systems served by instrument air when pressure is regained.

K/A MATCH ANALYSIS
Question tests knowledge needed to have the ability to restore instrument air to containment following a loss of instrument air due to CIA.

ANSWER / DISTRACTOR ANALYSIS
A. Incorrect. 9378 closes due to CIA. Plausible because CVI and CIA are both caused by an SIS.
B. Incorrect. SIS does not need to be reset prior to reset of CIA. Plausible because it is logical to assume that the initiating signal would first need to be reset.
C. Incorrect. SIS does not directly cause 9378 to close. Plausible because manual operation is possible and 9378 does close following an SIS, but not as a direct result of SIS.
D. Correct. See referenced LP.

REFERENCES
1. V-LO-TX-28101, RPS-SSPS-AMSAC, Rev. 3.
2. P&ID 1X4DB186-4, Instrument Air System Containment Building, Rev. 12.
3. Vogit Bank Question LO-LP-02110-14-01.

MCS	Time:	1	Points:	1.00	Version:	0 1 2 3 4 5 6 7 8 9	
					Answer:	D D C D A C A B C A	Scramble Range: A - D

Tier:	1	Group:	1
Key Word:	INSTRUMENT AIR	Cog Level:	MEM 2.9
Source:	B	Exam:	VG05301
Test:	R	Author/Reviewer:	MAB/RSB

1. 065AA1.03 001

Unit 1 has the following conditions:

- An inadvertent SI has occurred.
- The SI signal has not yet been reset.
- 1HV-9378, Instrument Air to Containment, is shut.

Which ONE of the following describes the reason for 1HV-9378 being shut and the actions required to restore instrument air to containment?

A. 1HV-9378 went shut due to a CVI signal caused by the SIS. To open 1HV-9378, the SIS must be reset which will then allow the CVI to be reset allowing the valve to be reopened using the QMCB handswitch.

B. 1HV-9378 went shut due to a CIA signal caused by the SIS. The SIS must be reset to allow CIA to be reset. After CIA is reset, 1HV-9378 can be opened from the QMCB.

C. 1-HV-9378 went shut as a direct result of the SIS. The only way to open the valve is to locally open the valve using the handwheel OR reset SI and then open 1HV-9378 from the QMCB.

D. 1HV-9378 went shut due to a CIA signal caused by the SIS. The CIA can be reset without resetting SI and then open 1HV-9378 from the main control board.

K/A
065 Loss of Instrument Air
AA1.03 Ability to operate and/or monitor the following as they apply to Loss of Instrument Air: Restoration of systems served by instrument air when pressure is regained.

K/A MATCH ANALYSIS
Question tests knowledge needed to have the ability to restore instrument air to containment following a loss of instrument air due to CIA.

ANSWER / DISTRACTOR ANALYSIS
A. Incorrect. 9378 closes due to CIA. Plausible because CVI and CIA are both caused by an SIS.
B. Incorrect. SIS does not need to be reset prior to reset of CIA. Plausible because it is logical to assume that the initiating signal would first need to be reset.
C. Incorrect. SIS does not directly cause 9378 to close. Plausible because manual operation is possible and 9378 does close following an SIS, but not as a direct result of SIS.
D. Correct. See referenced LP.

REFERENCES
1. V-LO-TX-28101, RPS-SSPS-AMSAC, Rev. 3.
2. P&ID 1X4DB186-4, Instrument Air System Containment Building, Rev. 12.
3. Voglt Bank Question LO-LP-02110-14-01.

MCS	Time:	1	Points:	1.00	Version:	0 1 2 3 4 5 6 7 8 9	
					Answer:	D D C D A C A B C A	Scramble Range: A - D

Tier:	1	Group:	1
Key Word:	INSTRUMENT AIR	Cog Level:	MEM 2.9
Source:	B	Exam:	VG05301
Test:	R	Author/Reviewer:	MAB/RSB

28.14 ESFAS Actuation Signals

Safety Injection (SI)

Purpose: To protect the core from a loss of coolant water to prevent overheating and damage to the fuel and/or fuel cladding and to provide boric acid to the core for emergency boration.

SI Actuation Signals

	Coincidence	Set point
Low Pressurizer Pressure SI	**2** out of **4** channels	≤ **1870 psig**
Can be manually blocked below P-11		
Containment Pressure High 1 SI	**2** out of **3** channels	≥ **3.8 psig**
Low Steam Pressure SI/SLI	**2** out of **3** channels **1** out of **4** steam lines	≤ **585 psig***
Can be manually blocked below P-11		
Manual SI	**1** out of **2** hand switches	

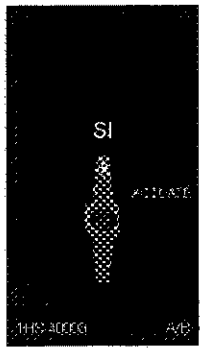

*** Set point is rate sensitive**

Systems affected by Safety Injection Signal

1) Reactor Trip
2) Turbine Trip
3) Main Feed Pump Trip
4) Feed Water Isolation
5) Motor Driven Auxiliary Feed Water Pump Start
6) MDAFW pumps discharge valve open signal
7) Steam Generator Blowdown valves close signal
8) Steam Generator Sample Valves close signal
9) **C**ontainment **I**solation Phase **A** (CIA)
10) **C**ontainment **V**entilation **I**solation (CVI)
11) **C**ontrol **R**oom **I**solation (CRI)
12) Essential Chillers start
13) Diesel Generator Emergency start
14) CVCS normal charging and safety grade charging isolates
15) **E**mergency **C**ore **C**ooling **S**ystem (ECCS) start
    - CCPs
    - SIPs
    - RHR pumps
    - ECCS valve alignment
16) NSCW pump starts
17) NSCW cooling tower blow down isolates.
18) Containment Coolers supply and return valves receive open signals
19) Containment Coolers start in slow stopped

Containment Isolation Phase A (CIA)

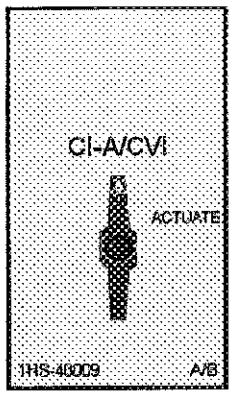

The purpose for CIA is to isolate containment following an accident to limit the offsite release to the public. It performs this function by isolating all system penetrations leaving and entering containment that are not required to safely shutdown the plant.

CIA Actuation Signals

1) Safety Injection Signal

2) Manual CIA/CVI actuating switches **1** out of **2**

Equipment affected by CIA Actuating

1) HV-8100 RCP Seal Return Isolation Valve Train A

2) HV-8112 RCP Seal Return Isolation Valve Train B

3) HV-8160 CVCS Letdown Isolation Valve Train A

4) HV-8152 CVCS Letdown Isolation valve Train B

5) HV-3502 RCS Hot Leg sample valve Train A

6) HV-3548 RCS Hot Leg sample valve Train B

7) HV-3507 Pressurizer liquid sample Isolation valve Train A

8) HV-3508 Pressurizer liquid sample Isolation valve Train B

9) HV-3514 Pressurizer steam sample Isolation valve Train A

10) HV-3513 Pressurizer steam sample Isolation valve Train B

11) HV-0780 Containment Sump Discharge Isolation Train A

12) HV-0781 Containment Sump Discharge Isolation Train B

13) HV-7699 RCDT discharge isolation valve Train A

14) HV-7136 RCDT discharge isolation valve Train B

15) HV-7126 RCDT vent to WGPS isolation valve Train A

16) HV-7150 RCDT vent to WGPS isolation valve Train B

17) HV-27901 Containment Fire Protection Isolation Valve

18) HV-9378 Instrument Air to Containment Isolation

19) HV-9385 Service Air to Containment Isolation

20) HV-10950 Accumulator #1 Sample isolation valve

21) HV-10951 Accumulator #2 Sample isolation valve

22) HV-10952 Accumulator #3 Sample isolation valve

23) HV-10953 Accumulator #4 Sample isolation valve

24) HV-8028 PRT fill isolation valve

25) HV-8047 PRT N2 supply isolation valve train A

26) HV-8033 PRT N2 supply isolation valve train B

27) HV-8212 PASS GAS sample isolation valve train A

28) HV-8211 PASS Gas sample isolation valve train B

29) HV-8986A PASS Containment Sump Sample isolation valve train A

30) HV-8986B PASS Containment Sump Sample isolation valve train B

31) HV-8880 SI Accumulator N2 supply isolation valve

32) HV-8888 SI Accumulator Fill isolation valve

33) HV-8824 SI Hot Leg 2 & 3 injection check valve test isolation trn B

34) HV-8825 SI SIS recirc test isolation valve

35) HV-8843 SI boron injection test line bypass isolation train B

36) HV-8871 SI check valve test containment isolation valve train A

37) HV-8964 SI check valve test containment isolation valve train B

38) HV-8881 SI hot leg 1 & 4 check valve test isolation valve train B

39) HV-8823 SI Cold Leg injection check valve test isolation train B

40) HV-8890A SI pump recirc test line isolation

41) HV-8890B SI pump recirc test line isolation

Resetting of CIA

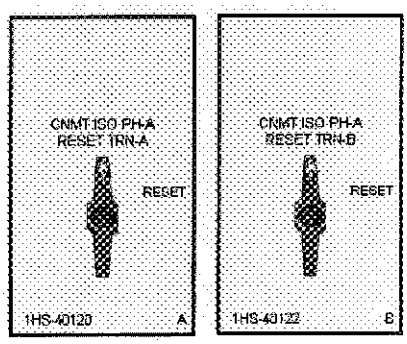

1) Both reset switches have blocking capability due to the retentive memory circuit. This means that CIA can be reset at anytime even with the actuating signal still present. The retentive memory circuit retains the last input received. To receive another actuation, the original actuation signal must first clear.

This will then allow any future CIA actuation signal to cause a re-actuation.

2) To reset CIA, both reset switches on the main control board must be momentarily placed in the reset position.

Containment Ventilation Isolation

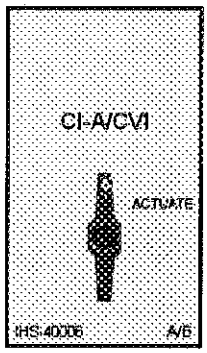

The purpose of CVI is similar to CIA that is to isolate containment penetrations to prevent or minimize the escape of radioactivity to the general public. The CVI actuation mainly isolates or effects HVAC systems.

CVI Actuation Signals

1) Safety Injection Signal

2) Hi radiation signal from Containment Area Radiation Monitor RE-002 or RE-003

3) Hi radiation signal from Containment air particulate monitor RE-2565A

4) Hi radiation signal from Containment iodine monitor RE-2565B

5) Hi radiation signal from Containment gas monitor RE-2565C

6) Manual CIA/CVI Actuating switches **1** out of **2** *

7) Manual Containment Spray Actuation **2** out of **2** on **1** out of **2** stations *

*** Caution if CVI only is required do not use the CIA/CVI or the Containment Spray Actuation hand switches. Manually alignment of equipment is highly desired.**

Equipment affected by CVI actuation

1) Containment Mini Purge Supply and Exhaust Dampers receive close signals.

2) Containment Preaccess (Normal) Purge Supply and Exhaust Dampers receive close signals.

3) Post LOCA Hydrogen Purge Dampers receive close signals.

4) Containment Atmosphere Radiation Monitor RE-2562 Inlet and Outlet Dampers receive close signals.

LO-LP-02110-14-01
Given the following:

* An inadvertent SI has occurred on Unit 1,

* The SI signal has not been reset,

* 1HV-9378 is shut isolating Instrument Air to containment.

Which of the following describes the actions required to restore instrument air to containment?

A. 1HV-9378 went shut due a CVI signal caused by the SIS. To open 1HV-9378, the SIS must be reset which will then allow the CVI to be reset allowing the valve to be reopened using the QMCB handswitch.

B. 1HV-9378 went shut due to a CIA signal caused by the SIS. The CIA can be reset without resetting SI and then open 1HV-9378 from the main control board. See P&ID 1X4DB186-4 INSTRUMENT AIR SYSTEM CONTAINMENT BUILDING REV 12

C. 1HV-9378 went shut as a direct result of the SIS. The only way to open the valve is to locally open the valve using the handwheel OR reset the SI and then open 1HV-9378 from the QMCB.

D. 1HV-9378 went shut due to a CIA signal caused by the SIS. The SIS must be reset to allow CIA reset. After CIA is reset, 1HV-9378 can be opened from the QMCB.

LO-LP-02110-14
List the conditions which will isolate containment instrument and service air. Describe how to manually isolate/unisolate containment compressed air.