5.0 REACTOR BUILDING AND SUPPORTING SYSTEMS

5.1 Reactor Building Structure

The Reactor Building consists of a cylindrical reinforced concrete outer Shield Building, a cylindrical post-tensioned concrete inner Containment Building with a 0.25-in thick steel liner, and an annular space between the two buildings. The Shield Building functions to protect the Containment Building from external hazards. The Containment Building contains the RCS and portions of associated structures, systems, and components. In the event of a LOCA or severe accident, the Containment Building serves to retain all radioactive material and to withstand the maximum pressure and temperature resulting from the release of stored energy.

Figure 5-1 through Figure 5-6 show elevation and plan views of the Nuclear Island. The Reactor Building is located at the center of the Nuclear Island and is situated on a common basemat with the other Nuclear Island structures.

The Reactor Building is designed to withstand internal accidents as well as external hazards including the following: aircraft hazard, EPW, seismic events, missiles, tornado, and fire. The EPR design bases are expected to envelope potential sites in the central and eastern U.S.

The Safe Shutdown Earthquake (SSE) design includes consideration of various soil conditions, including rock sites. Figure 5-7 shows the free-field ground motions anchored to a 0.3g peak ground acceleration. The U.S. design will be anchored to a peak ground acceleration to ensure that potential U.S. sites are enveloped. The soil conditions identified in Table 5-1 are representative of the wide spectrum of sites that are considered.

The Shield Building provides a hardened structure designed to withstand an aircraft hazard. The Containment Building interior structures and equipment are decoupled from the impact forces of an aircraft hazard. Figure 5-8 is a general plant layout showing the concept for protection against an aircraft hazard. Figure 5-9 shows the decoupling of the containment interior structures from the outer walls.

The common basemat of the Nuclear Island (the Reactor Building, Safeguard Buildings, and Fuel Building) ensures that overturning due to a seismic event or aircraft hazard will not occur.

The Shield Building is designed to withstand the potential effects of an external explosion.

The design pressure and temperature of the Containment Building are defined by the following events:

- Double-ended rupture of a reactor coolant pipe (LBLOCA)
- Main steam line break
- Severe accidents

Sprays or fan coolers are not required to mitigate short-term containment pressure or temperature responses to design basis accidents or for long-term containment pressure response. The RHRS is sufficient to reduce the pressure to half the peak in less than eight hours after a LOCA.

The design pressure and temperature of the containment are 62 psig and 338°F, respectively. The maximum pressure and temperature for a LBLOCA or a steam line break are below the design values of the containment.

The containment has an allowable flooding volume of approximately 46,500 ft^3, which is sufficient to protect safety-related components against flooding after a piping failure.

The key dimensions of the Containment Building are:

Free volume (approx.)	2.82×10^6 ft^3
Internal diameter	153.5 ft
Thickness of inner wall	4.27 ft
Thickness of dome	3.28 ft
IRWST volume (normal operation)	511,700 gal

The reactor pool (reactor cavity with storage compartment above the RPV, used during refueling) and the IRWST are major internal structures.

The Containment Building also contains the reactor vessel, PZR, SGs, steam generator blowdown flash tank, and a portion of the main steam and feedwater lines.

Annulus

The annulus between the Shield Building and Containment Building is ventilated by the Annulus Ventilation System (AVS). During normal operation, transients and accidents, the AVS ensures a sub-atmospheric pressure of between 0.33 psi and 0.9 psi in the annulus by extraction and filtration through High Efficiency Particulate Air (HEPA) and iodine filters before release to the environment via the plant stack.

The AVS contains nuclear filtration equipment including HEPA filters and carbon adsorbers. The operational train (pre-filters and HEPA filters) of the AVS operates continuously during normal operation so that the negative pressure in the annulus is already provided in the event of an accident. In the event of an accident, the system uses the nuclear filtration system (pre-filters, HEPA filters, and carbon adsorbers) to continue filtering the annulus.

High energy piping traversing the annulus is routed in guard pipes.

Figure 5-10 shows the flow schematic of the AVS.

Shield Building

The approximate dimensions of the Shield Building wall are:

- Cylindrical portion up to Safeguard Buildings height:

Internal diameter	174 ft
Thickness	4.3 ft

- Cylindrical portion above Safeguard Buildings height:

Inside diameter	174 ft
Thickness	5.9 ft
Dome diameter/thickness	217 ft / 5.9 ft

Basemat

The Reactor Building basemat is reinforced concrete. The basemat is approximately 10 ft thick. A circumferential pre-stressing gallery of vertical tendons of the inner wall is situated underneath the basemat. The Containment Building steel liner continues into the basemat to prevent release of radioactivity to the ground.

5.2 Containment Isolation

Containment isolation valves minimize the release of radioactive fluids to the environment in the event of an accident with fission product releases in the containment.

The containment is designed for an integrated leak rate equal to or less than 0.5% per day of the containment free volume at the containment design pressure and temperature. The containment integrated leak rate will be verified through tests.

The isolation function is assured through penetration and isolation valve arrangements. Mechanical and electrical penetrations are designed to withstand the consequences of external hazards and an accident in the containment.

The type, number, and arrangement of isolation valves are in accordance with U.S. requirements for existing PWRs. These requirements consider isolation valves on piping for systems in normal operation and in accidents. This includes systems that are part of the RCPB, connected directly to the containment atmosphere, or form a closed loop inside of containment.

The single failure criterion is satisfied for piping directly connected to the RCS or to the inner containment atmosphere along with the installation of a minimum of two valves for each line. The two valves operate independently of each other, with one installed inside the containment and one outside.

The exception to this principle involves the lines from the IRWST sumps to the SIS and SAHRS pumps, which have only one isolation valve. In this case, the piping between the pump and the valve is contained in a sealed envelope (guard pipe), thus providing a double leak-tight penetration barrier. This double barrier is designed to be leak-tight and withstand the design basis environmental conditions inside the containment (from the containment penetration to the containment isolation valve) and takes into account a single failure (functional failure or passive failure).

5.3 Provisions for Severe Accident Mitigation

The goal of the severe accident mitigation concept of the EPR is to ensure the function of the containment in the event of an accident resulting in a significant structural degradation of the reactor core. To meet this design goal, specific design features have been incorporated for the retention and stabilization of the molten core inside the containment as well as for the mitigation of environmental effects that can compromise its fission product retention capability. The dedicated features to address severe accident challenges incorporated in the EPR design include:

- Dedicated valves for rapid depressurization of the RCS
- Multiple Passive Autocatalytic Hydrogen Recombiners (PARs) to minimize the risk of hydrogen detonation
- A containment designed to promote atmospheric mixing with the ability to withstand the loads produced by hydrogen deflagration

- A dedicated compartment to spread and cool molten core debris for long-term stabilization
- A SAHRS with redundant trains
- Electrical and I&C systems dedicated and qualified to support severe accident mitigation features
- The Reactor Building consisting of an inner Containment Building and an outer Shield Building with a sub-atmospheric annulus

These features ensure that the EPR has the ability to mitigate a broad spectrum of severe accident challenges and is consistent with advanced light water reactor expectations regarding severe accidents.

Core Melt Retention

The EPR is equipped with a dedicated Core Melt Retention System for molten core debris up to and including the total inventory of the core, internals, and lower RPV head. The functional principle of the Core Melt Retention System is to spread the molten core debris over a large area and stabilize it by quenching it with water. Spreading increases the surface-to-volume ratio of the melt to promote fast and effective cooling and limit further release of radionuclides into the containment atmosphere. The main components of the Core Melt Retention System are shown in Figure 5-11. These features ensure a passive transformation of the molten core into a cooled, solid configuration without operator action.

After release from the RPV, a period of melt retention in the reactor cavity will occur. The need for this temporary retention addresses the prediction that the release of molten material from the RPV will, most likely, not take place in a single release, but over a period of time. Without a retention period, this release could create undefined and potentially unfavorable conditions for subsequent melt spreading.

Accumulation and temporary retention within the reactor cavity is ensured by a layer of sacrificial material that must be penetrated to escape into the transfer channel. This delay ensures that, in case of an incomplete first release of melt from the RPV, practically the entire core inventory will be collected in the cavity. The admixture of the sacrificial material equalizes the spectrum of possible melt states prior to spreading and makes the melt properties (and, therefore, subsequent stabilization measures) independent of the uncertainties related to the initial release of melt from the RPV.

The sacrificial concrete in the reactor cavity is backed by a refractory layer of sintered Zirconium blocks (Figure 5-11). Consequently, the molten core-concrete interaction will proceed in a quasi one-dimensional manner. The progression front is subsequently limited by the fixed position of a cavity retention gate (Figure 5-11), thus, the total mass of concrete that has to be incorporated into the melt during temporary retention is well-defined. This temporary retention also ensures that the final temperature of the oxidic melt prior to spreading is reduced while the admixture of concrete ensures that the viscosity of the melt is maintained in a favorably low range.

The EPR melt stabilization concept involves two main phases:

1. Temporary retention and accumulation of the molten fuel mixture in the reactor cavity

2. Flooding, quenching, and long-term cooling of melt in the lateral spreading compartment

The relocation of the melt from the reactor cavity into the spreading area is initiated by the failure of a retention gate centered in the lower portion of the cavity. This gate, which isolates the reactor cavity from the spreading compartment, consists of a steel framework enclosed by an aluminum outer layer and covered with a layer of sacrificial concrete. The gate's concrete cover is an integral part of the sacrificial layer in the cavity and has approximately the same thickness. The retention time in the pit is primarily

driven by the thickness of this concrete cover and not by the delay-to-failure time of the gate after melt contact. The gate is the only location in the reactor cavity where the sacrificial concrete is not backed by a protective layer. Therefore, the melt plug represents the predefined failure location for melt retention in the cavity. Following the failure of the cavity retention gate, the melt will progress through the transfer channel in a single pour and into the spreading area. Figure 5-12 shows a schematic of the reactor cavity retention gate.

The spreading compartment is a dead-end room (Figure 5-13) which is virtually isolated from the rest of the containment. It is also protected from sprays, leaks, or other kinds of spillage. Since there is no direct water inflow into this compartment the spreading area will be dry at the time of the melt arrival.

The area within which the molten core debris will ultimately be retained is a shallow crucible. Its bottom and sides are assembled from individual elements of a cast iron cooling structure. The cooling structure is covered with a layer of sacrificial concrete and provides protection against thermal loads resulting from melt spreading as well as a sufficient delay to ensure that the cooling elements will be flooded prior to the initial contact between the molten core debris and the metallic cooling structure.

The melt stabilization process in the spreading area is passively actuated. When the melt enters into the spreading area, spring-loaded valves will be opened by a thermal actuator, initiating a controlled gravity-driven flow of water from the IRWST.

The configuration of the IRWST relative to the spreading area is represented in Figure 5-14.

The incoming water will fill a central supply duct underneath the spreading area where it will enter the system of parallel channels formed by finned cooling structure elements (Figure 5-15).

The water will continue to rise along the sidewall of the cooling structure and pour onto the surface of the melt from the circumference (Figure 5-16). Water overflow will continue until the spreading room and IRWST are balanced, resulting in the submersion of the spreading area and transfer channel as well as a portion of the reactor cavity, thereby stabilizing any residual core debris in those areas.

The stabilization of the melt in the spreading area is based on cooling and crust formation. Consequently, there are no limiting thermal-chemical constraints and no need to ensure a certain range of melt compositions or a predefined melt layering or distribution. Due to the high surface-to-volume ratio created by the spreading process and the fact that the melt is completely surrounded by cooled surfaces, a safe enclosure of the molten core debris within a crust envelope will be achieved soon after the end of the molten core-concrete interaction in the spreading area. The denser metallic melt fraction at the bottom is predicted to solidify within the first few hours. Solidification of the decay-heated oxidic melt will take longer, due to internal heat generation from radioactive decay.

Combustible Gas Control

The Combustible Gas Control System (CGCS) is designed to reduce the concentration of hydrogen produced during severe accidents and can also reduce the concentration of hydrogen within the containment following a LOCA. The CGCS (in standby mode during normal operation) becomes operational when subjected to a hydrogen/steam environment.

The CGCS is a completely passive system with three components as described below.

- Passive Autocatalytic Recombiners (PARs) are arranged throughout the containment to reduce the concentration of hydrogen and promote convection. The arrangement of the PARs supports global

convection, homogenizes the atmosphere, and reduces the global hydrogen concentration as well as peak hydrogen concentrations.

- Rupture foils are installed in the structural steelwork forming the ceiling above the SGs and open passively on pressure differential to promote global convection within the containment.
- Hydrogen mixing dampers are arranged in the lower annular rooms and above each of the four SGs. The mixing dampers are stainless steel louvers that open passively to promote a global convection loop within the containment.

The CGCS contributes to the maintenance of containment integrity by ensuring that hydrogen concentrations remain low enough to prevent excessive loads on the containment and internal structures. In order to meet this objective, the CGCS was designed to satisfy the following requirements:

- The local hydrogen concentration is maintained below 10% based on the free volume of the containment. Any region having a concentration of hydrogen above 10% by volume shall be small enough to prevent flame acceleration.
- The maximum amount of hydrogen, resulting from the oxidation of all Zirconium in the core, is reduced to below 4% within 12 hours.
- The adiabatic isochoric complete combustion pressure is kept below the containment design pressure for all scenarios that involve hydrogen combustion.

The PARs and mixing dampers are designed to remain operational following an earthquake and under adverse environmental conditions such as the irradiation, temperature, pressure, and humidity conditions resulting from a severe accident. The PARs are also able to withstand the various products released during a severe accident including aerosols, iodine, and spray, as well as local heat-up.

The CGCS interfaces with the atmosphere of the containment, but has no direct interface with other systems. Operational interfaces exist between the CGCS and the RCS depressurization system, the containment spray of the SAHRS, and the hydrogen monitoring system.

Severe Accident Heat Removal

The SAHRS is used in the event of a severe accident, to control the containment pressure and achieve long-term cooling of the IRWST and the molten corium in the spreading compartment. The SAHRS may also be employed to transfer residual heat to the ultimate heat sink during a beyond design basis event involving failure of all other RHR capability without core melt.

The SAHRS provides the following functions:

- Provides containment isolation in the event of an accident that does not require SAHRS actuation (This is the only safety-related function of the SAHRS.)
- Provides a containment spray function to rapidly control containment pressure and temperature following passive melt stabilization
- Provides long-term containment pressure and temperature control through operation in the recirculation mode
- Transfers residual heat from the containment atmosphere to the IRWST during a severe accident in order to control the containment pressure and temperature
- Removes fission products from the containment atmosphere during a severe accident
- Transfers residual heat from the spread melt to the IRWST during a severe accident

- Transfers residual heat from the IRWST to the ultimate heat sink via an intermediate, dedicated cooling system, during a severe accident or during a beyond design basis event without core melt in which all other RHR capability has failed
- Backflushes sump screens in the IRWST to remove accumulated debris from the sump screens of the SAHRS pump suction nozzle

The SAHRS consists of two separate and redundant trains. Each train consists of a dedicated suction line from the IRWST and a pump and heat exchanger located in a dedicated room in Safeguard Buildings 1 and 4. The secondary side of the SAHRS heat exchanger is cooled by the CCWS.

Figure 5-17 shows a schematic of the SAHRS.

There are three possible flow paths downstream of the pump and heat exchanger:

- To a dome spraying system consisting of a ring header with spray nozzles located in the dome of the containment to reduce containment pressure, temperature, and airborne fission products.
- To a basemat cooling device with an overflow to the spreading compartment to remove the decay heat from the spread melt. The decay heat is transferred to the containment atmosphere by steam generation. The steam is then condensed into the IRWST, completing the heat transfer from the spread melt to the IRWST. The flow limiter on the passive flooding path limits direct backflow into the IRWST to assure flooding of the transfer channel and reactor cavity during the SAHRS operation.
- To a sump screen flushing device which is used to detach accumulated debris from the sump screens of the SAHRS pump suction nozzle.

The SAHRS operates in a short-term and long-term mode. The volume, design and thermal capacity of the containment structures and the IRWST provide approximately 12 hours, after the beginning of the severe accident, for operator action. During this time, no active system is needed to maintain the containment pressure below its design value. After this time the short-term operating mode begins.

During the short-term mode, the containment pressure and temperature are controlled by spraying via the SAHRS spray line. Fission products are scrubbed from the containment atmosphere during this timeframe.

When the containment pressure and temperature are sufficiently reduced, one or both trains of the SAHRS may be operated to directly flood the spread melt to more efficiently remove decay heat and control containment temperature and pressure. The SAHRS operation mode may be changed as necessary to provide further containment atmospheric heat and fission product removal in the long-term.

To minimize the potential of a radioactivity release caused by leakage of recirculating highly contaminated water outside the containment, appropriate design provisions are provided. These include a specific leak-tight compartment for the system components and adequate shielding or purge connections and filters to allow repairs to be made during long-term operation.

Table 5-1
Soil Conditions

Case No.	Control Motion	Soil Profile (Half-Space or Layered)	Shear-Wave Velocity of Soil (ft/sec)
1	Soft	Half-Space	820
2A and 2B	Soft and Medium	Half-Space	1,640
3	Medium	Half-Space	2,625
4A and 4B	Medium and Hard	Half-Space	3,937
5	Hard	Half-Space	8,202
6	Soft	200 ft Layer	820
7	Medium	200 ft Layer	1,640
8	Medium	200 ft Layer	2,625

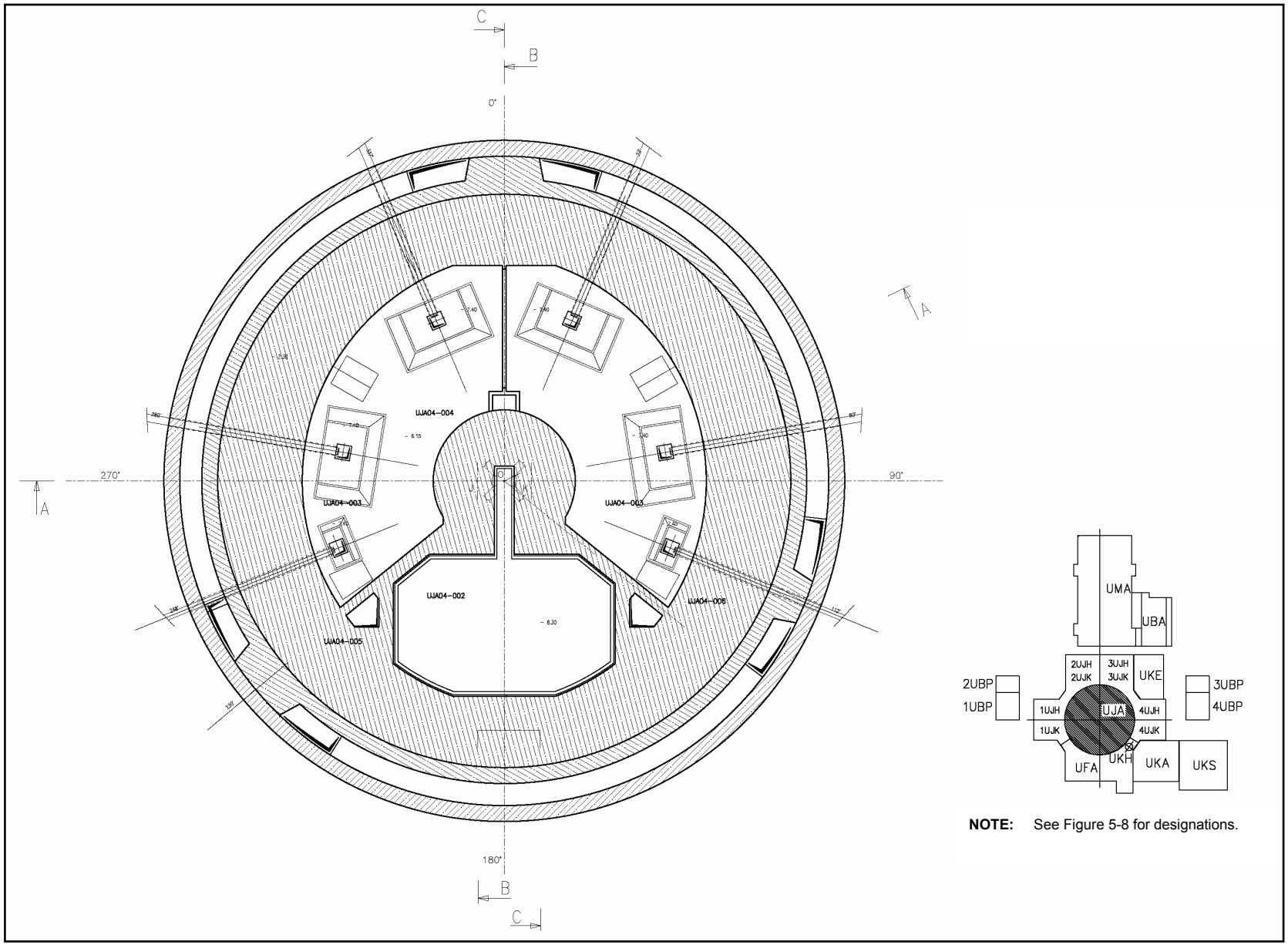

NOTE: See Figure 5-8 for designations.

Figure 5-1
Reactor Building Plan View -20 ft

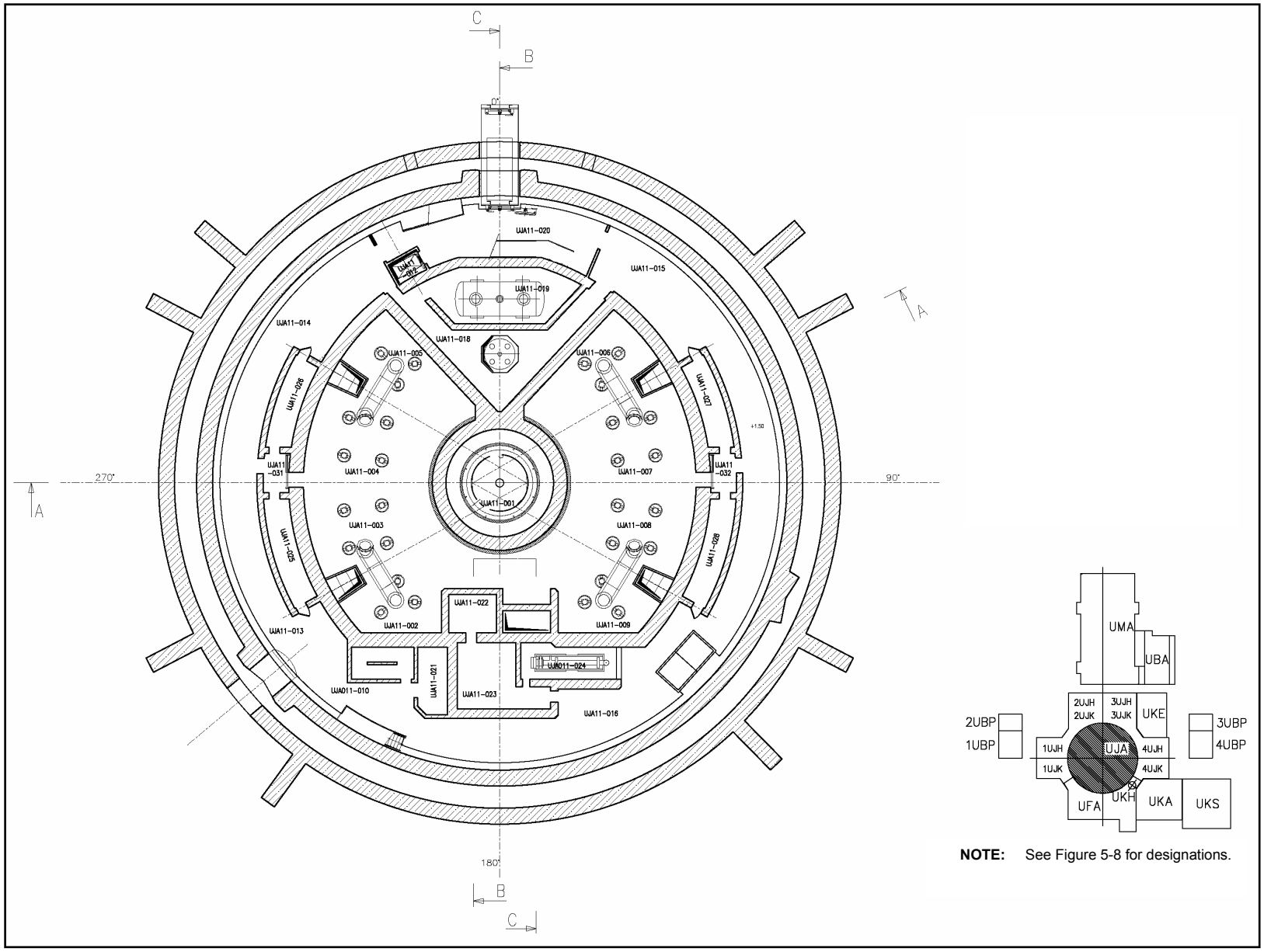

NOTE: See Figure 5-8 for designations.

Figure 5-2
Reactor Building Plan View +5 ft

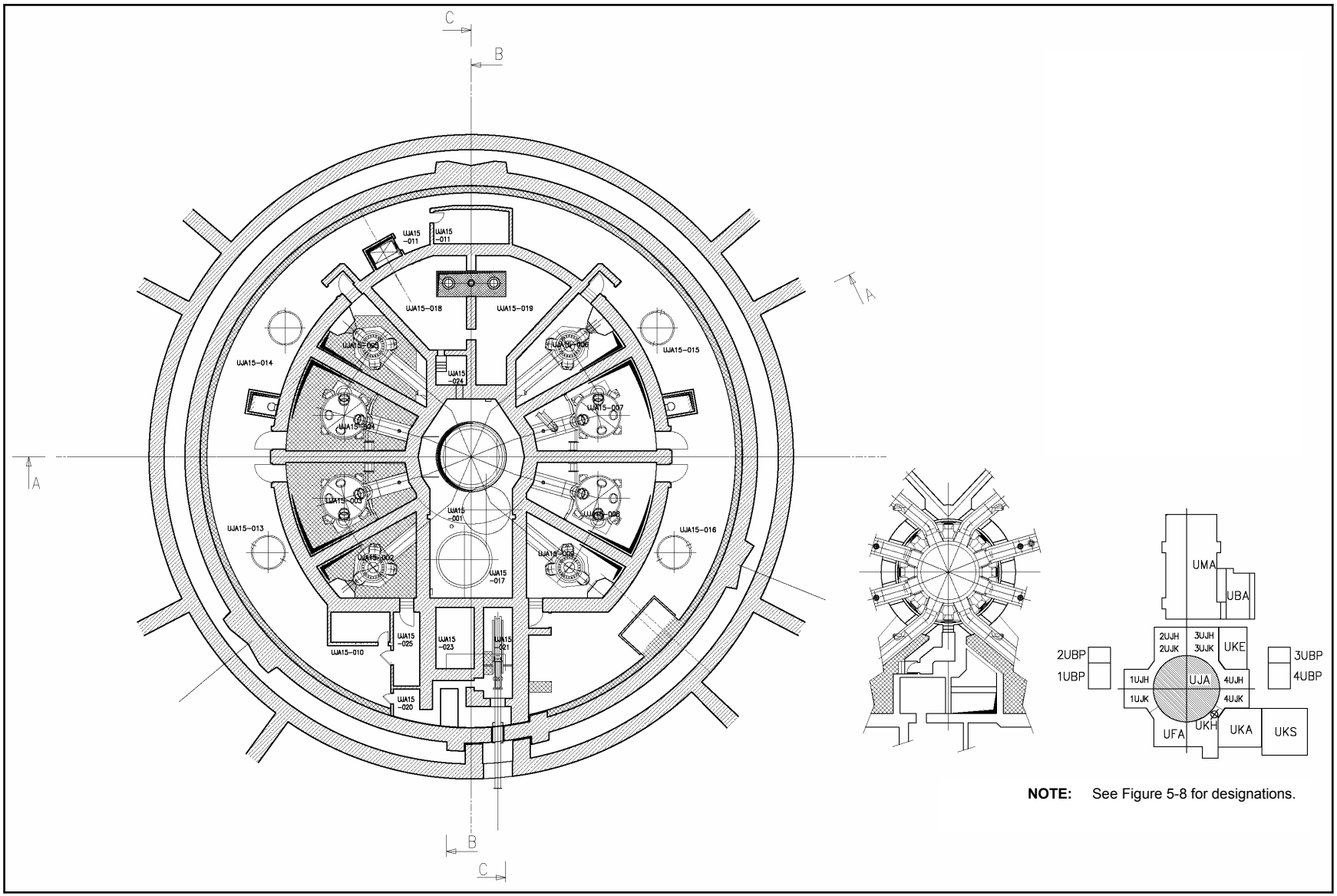

Figure 5-3
Reactor Building Plan View +17 ft

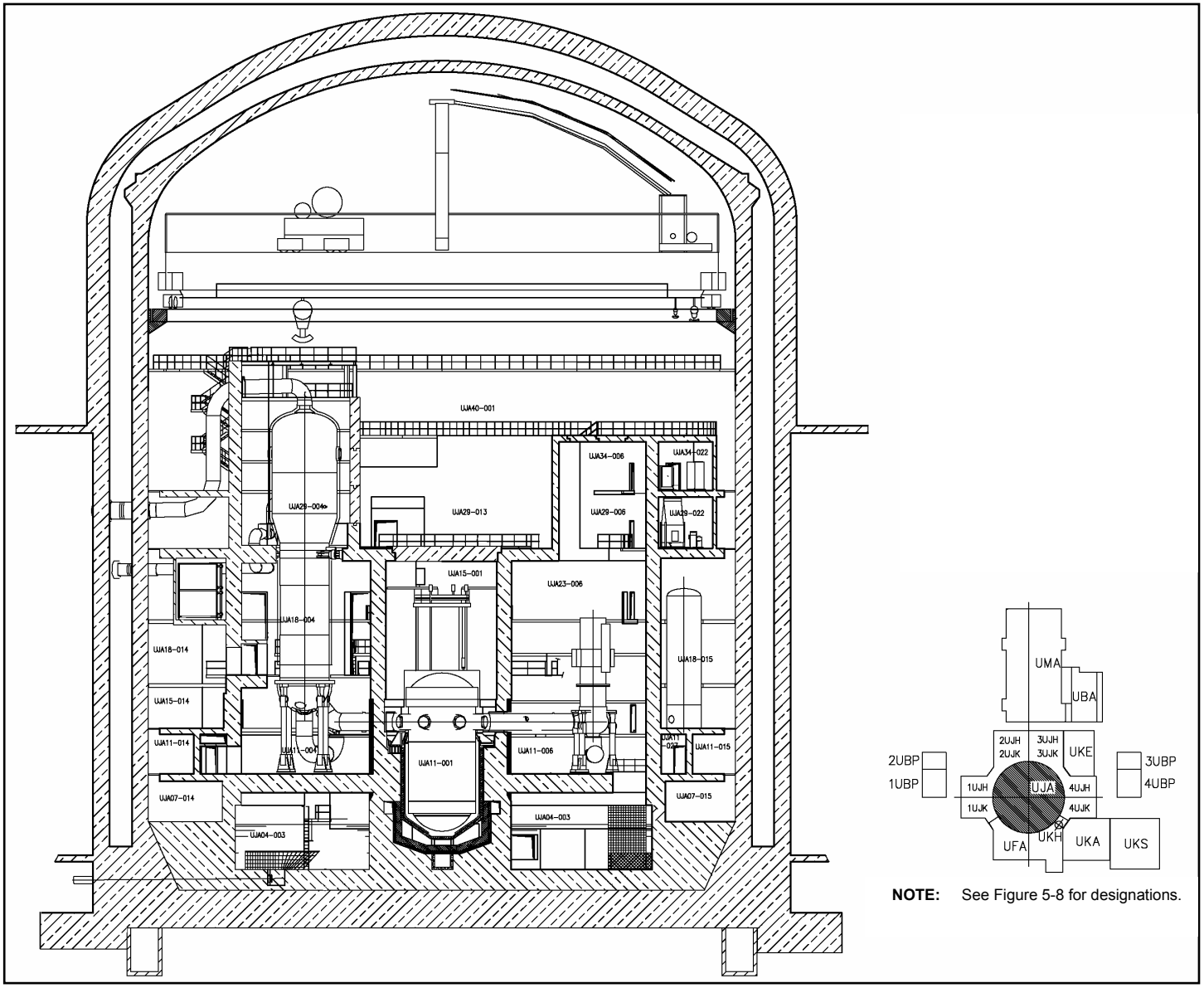

NOTE: See Figure 5-8 for designations.

Figure 5-4
Reactor Building – Section A-A

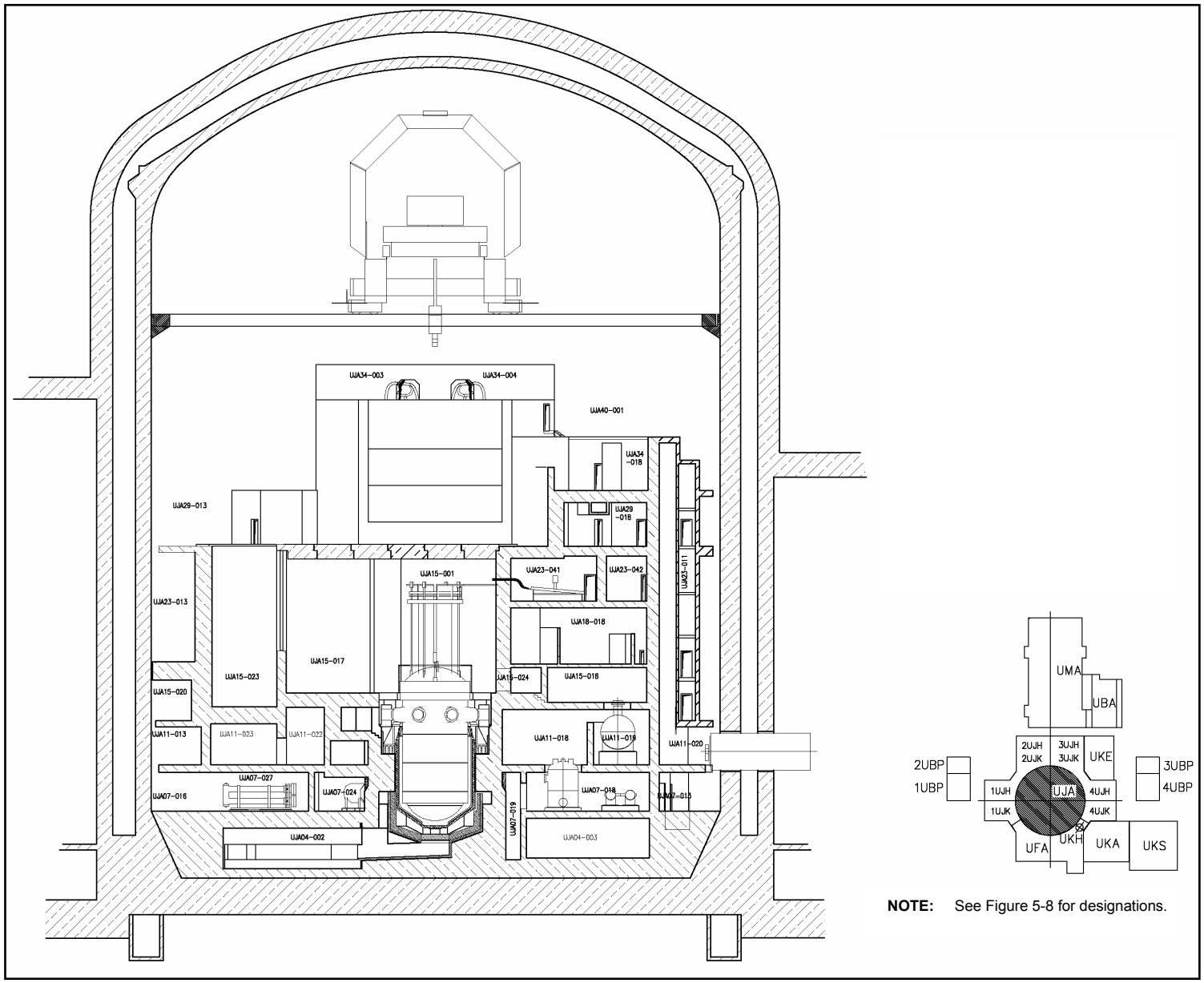

NOTE: See Figure 5-8 for designations.

Figure 5-5
Reactor Building – Section B-B

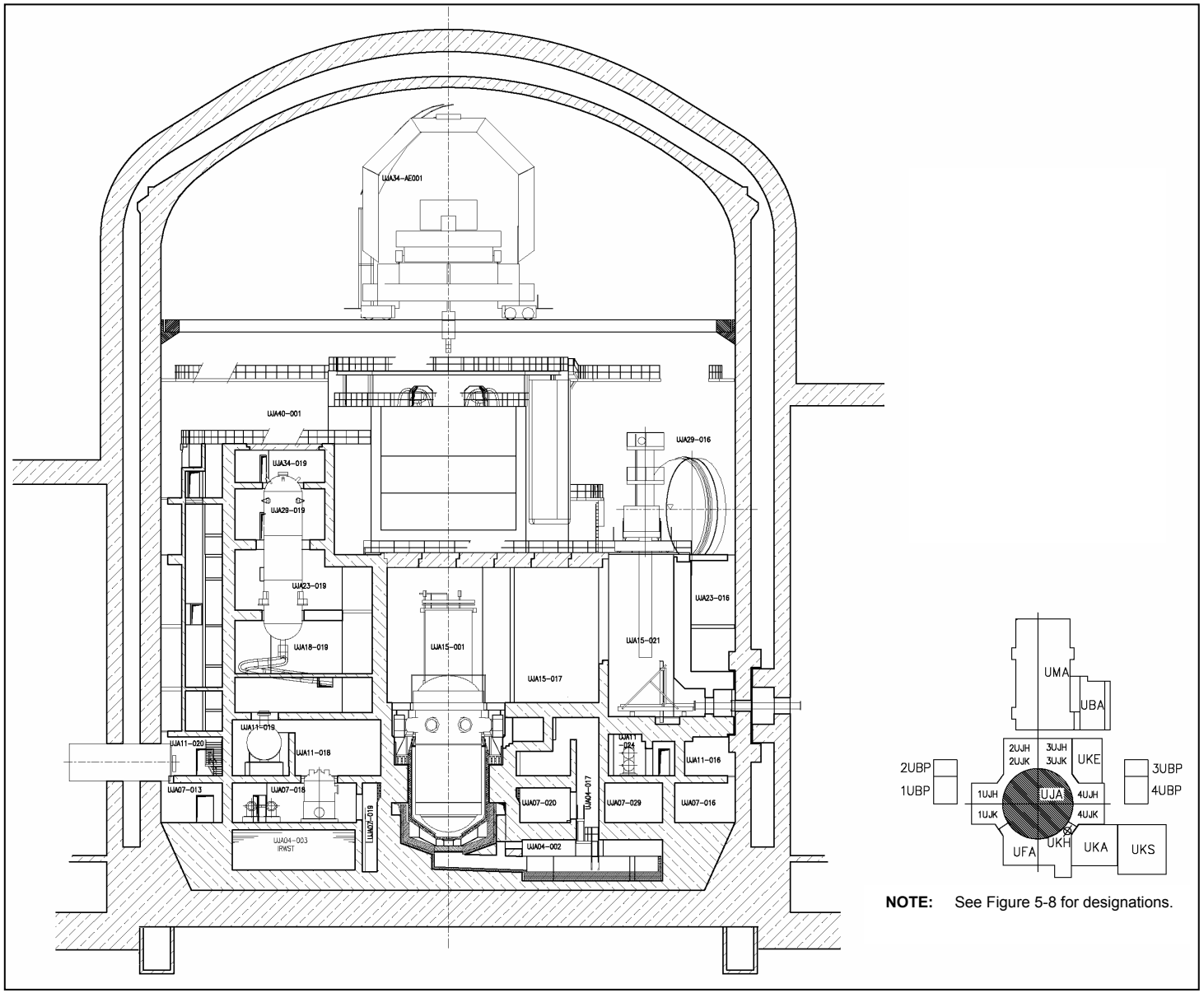

NOTE: See Figure 5-8 for designations.

Figure 5-6
Reactor Building – Section C-C

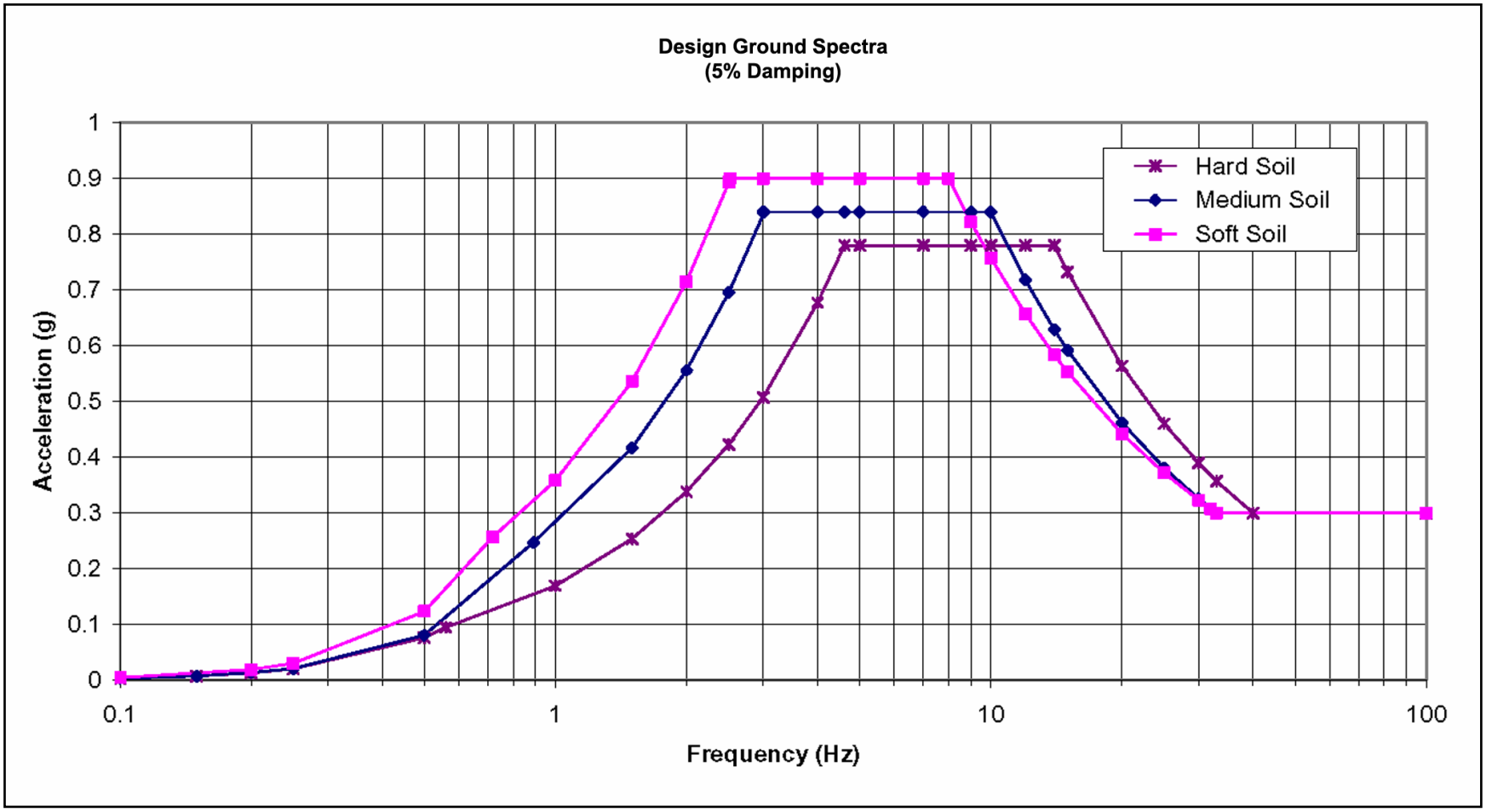

Figure 5-7
Free-Field Ground Motions

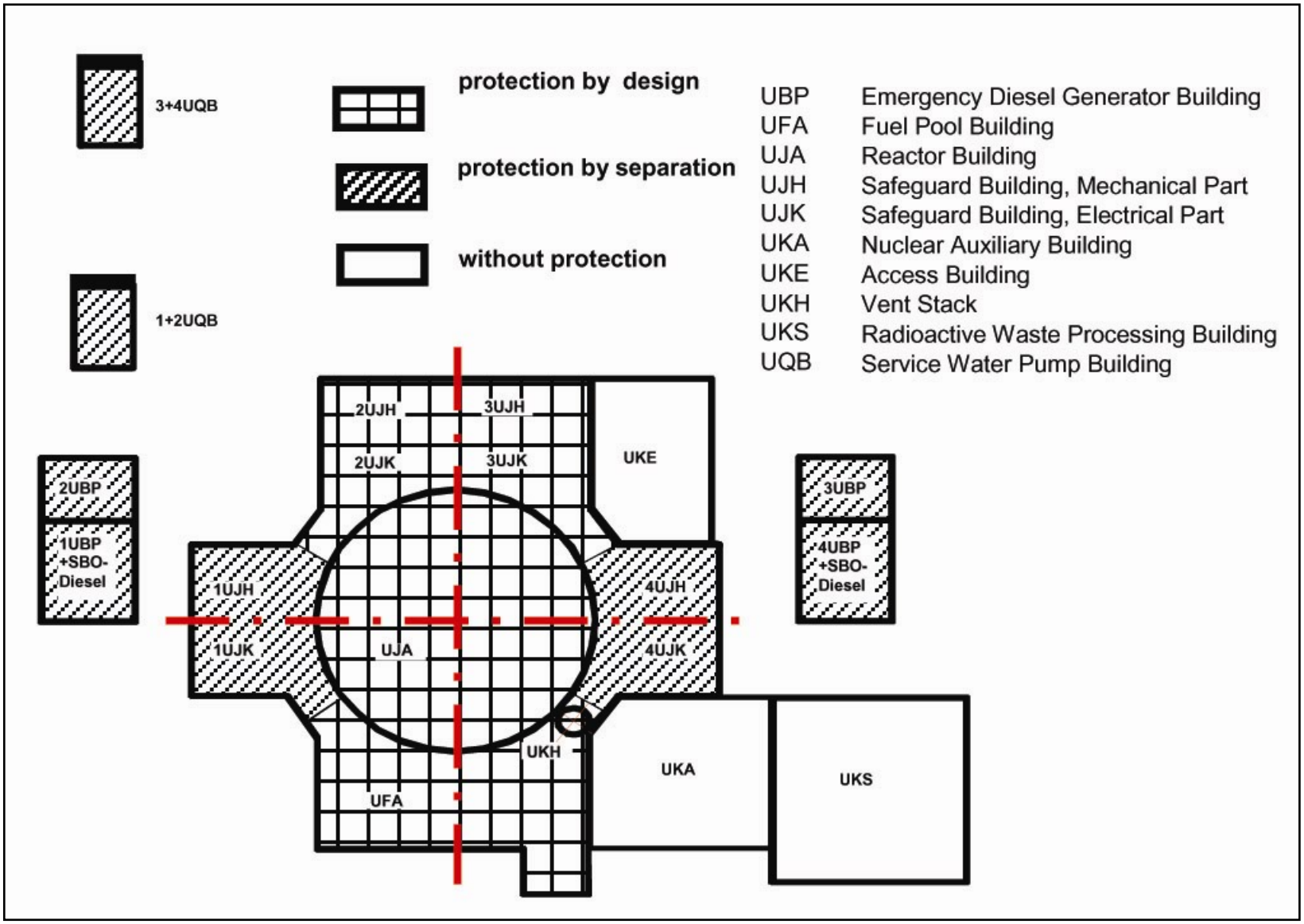

Figure 5-8
Aircraft Hazard Protection

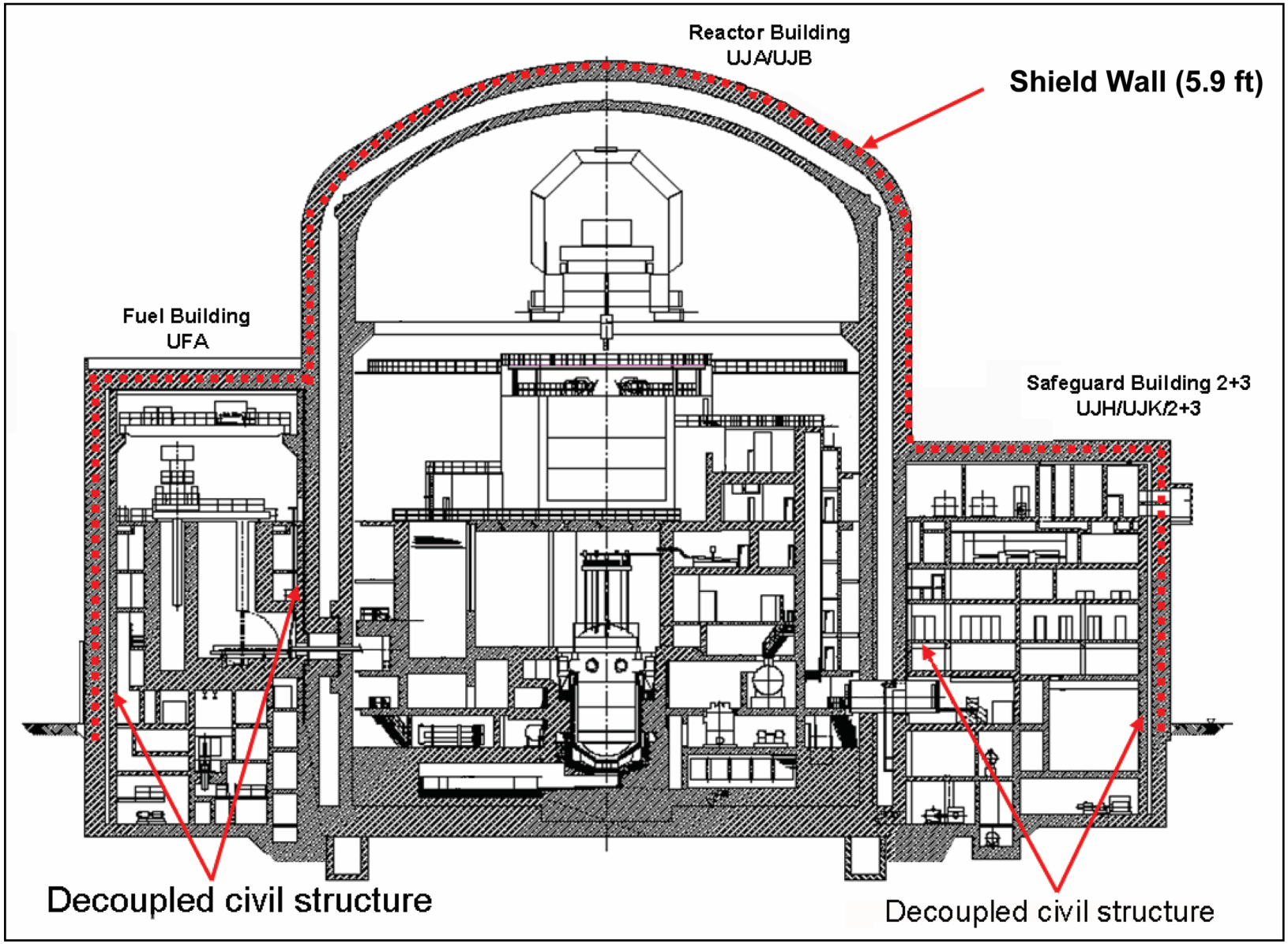

Figure 5-9
Containment Decoupling

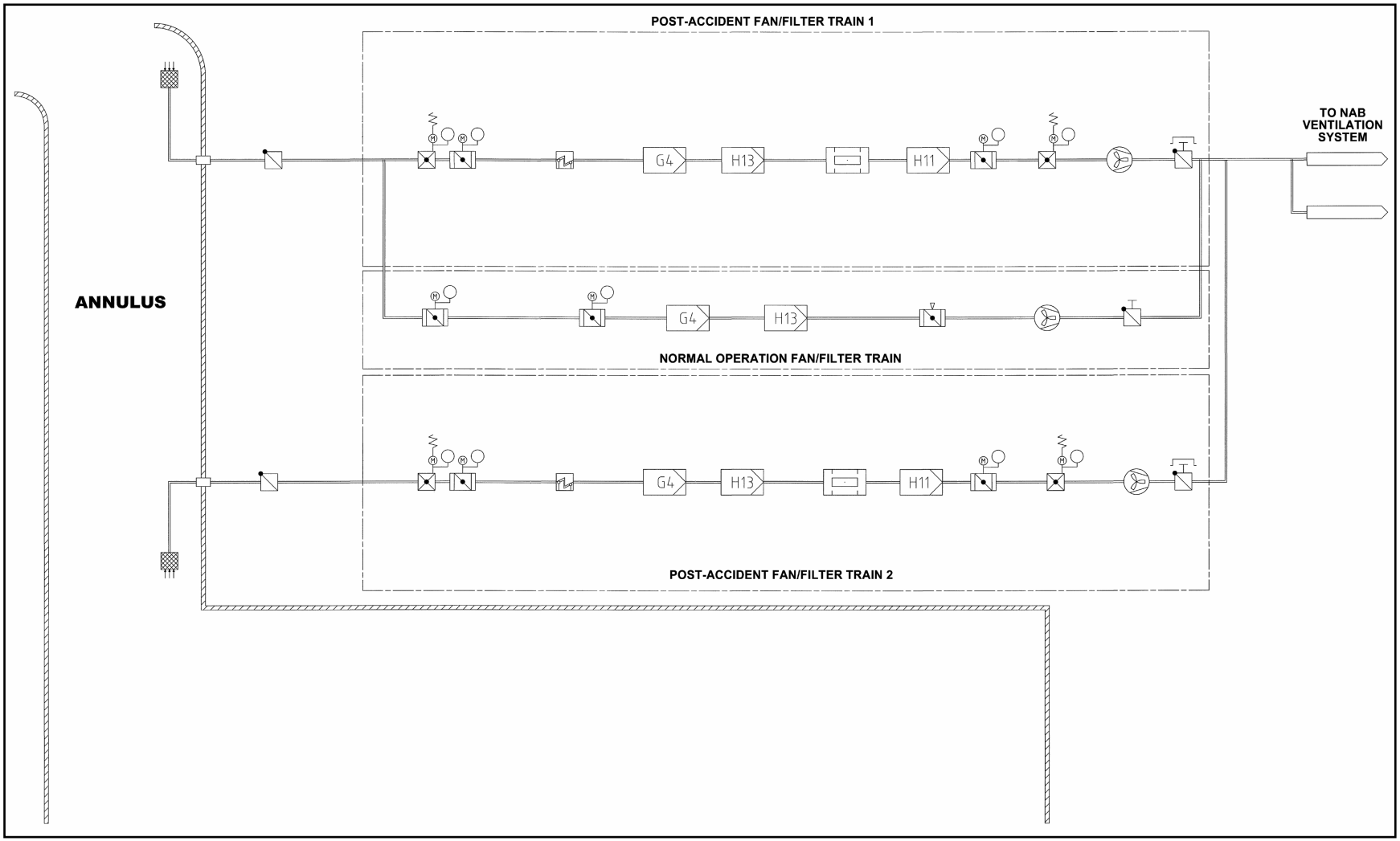

Figure 5-10
Annulus Ventilation System

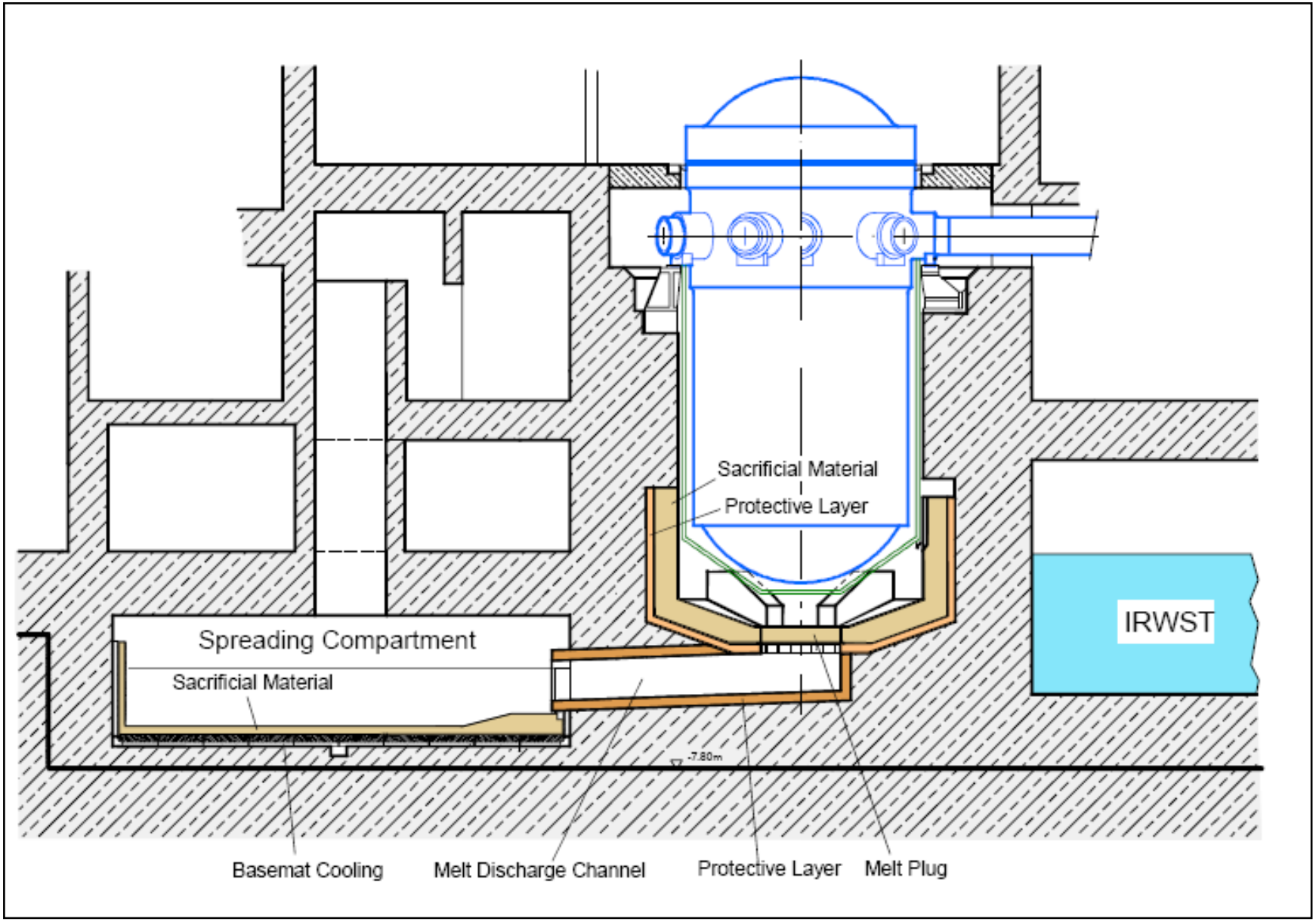

Figure 5-11
Core Melt Retention System

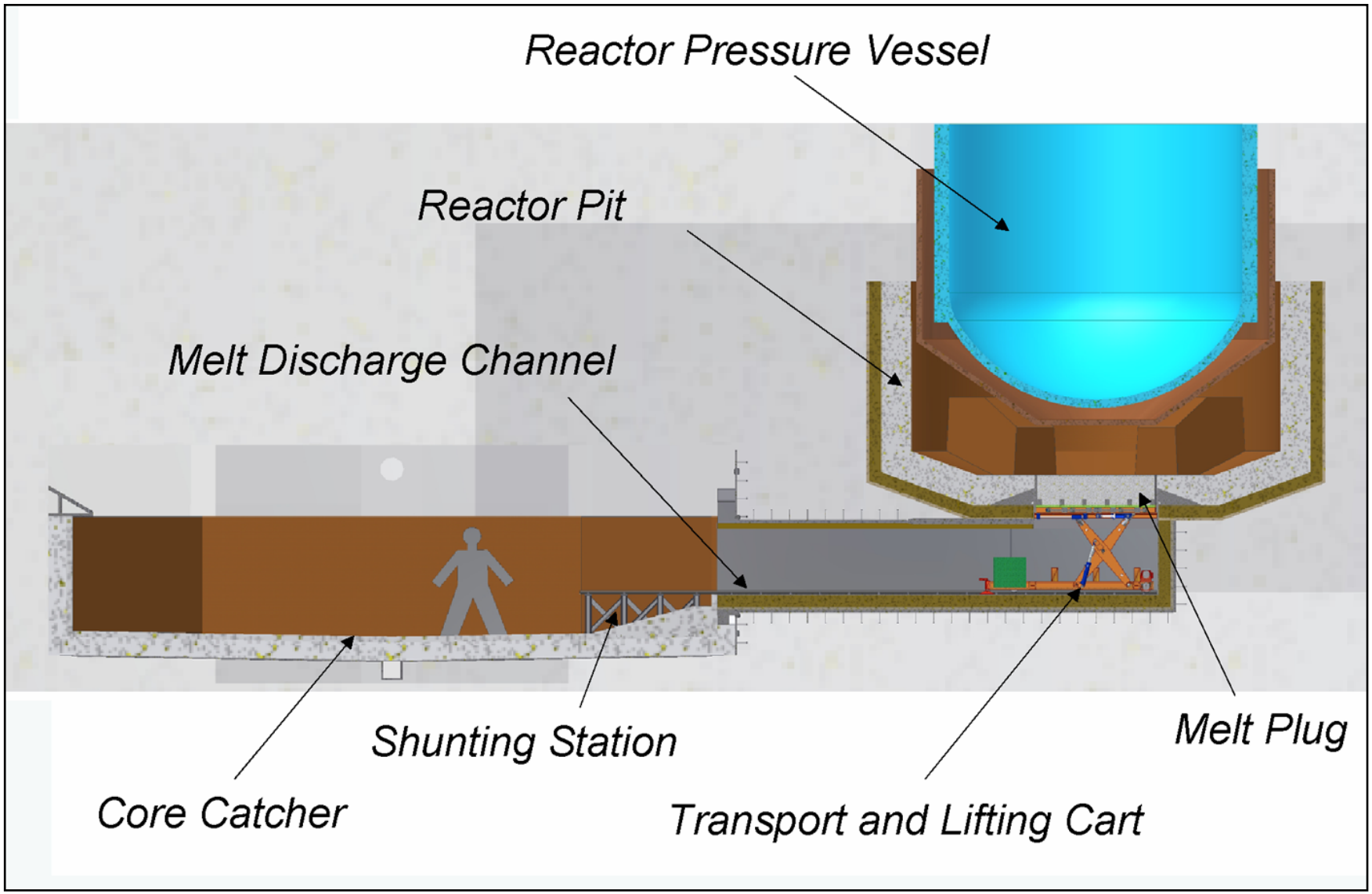

Figure 5-12
Reactor Cavity Retention Gate

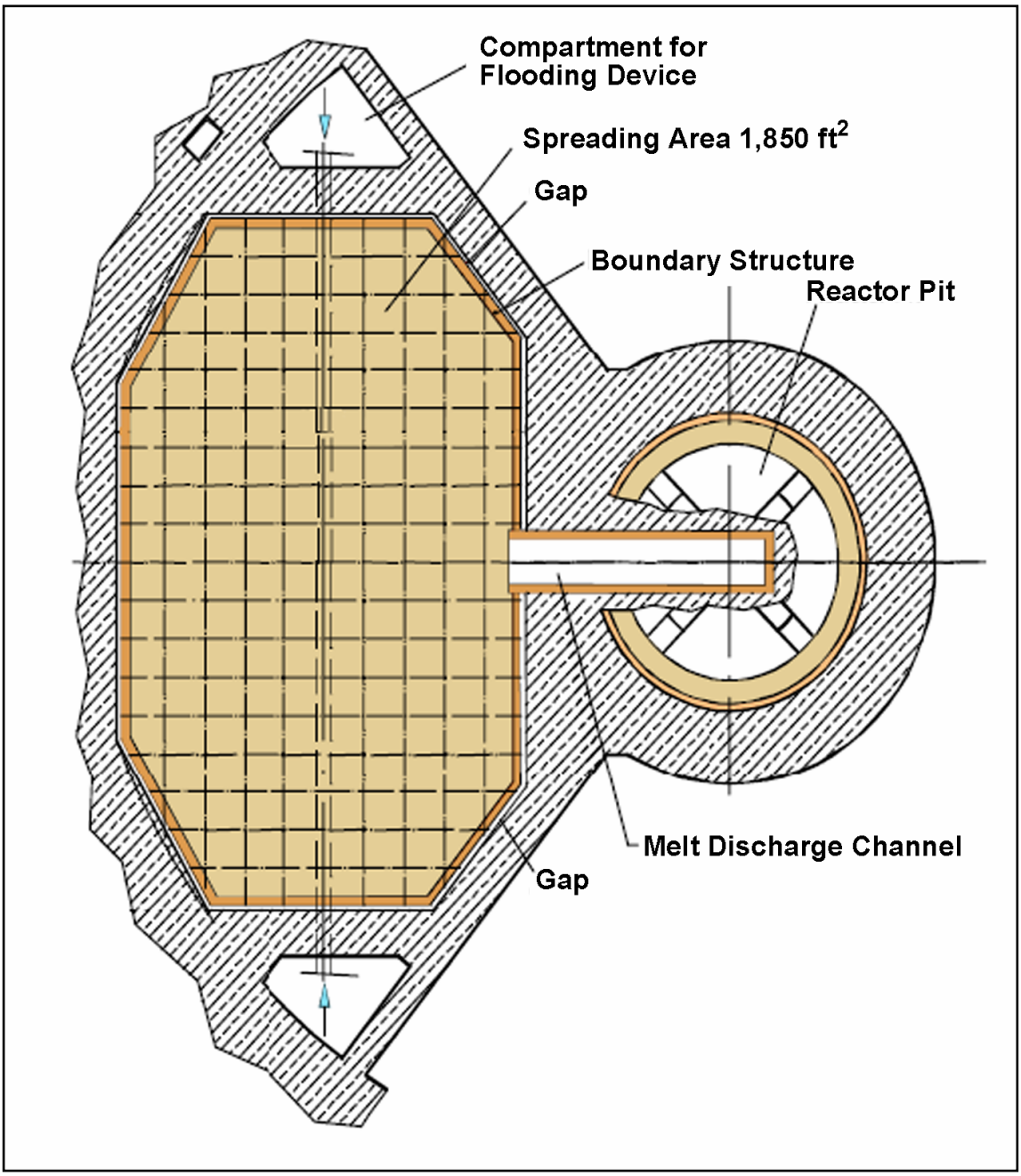

Figure 5-13
Core Melt Spreading Compartment

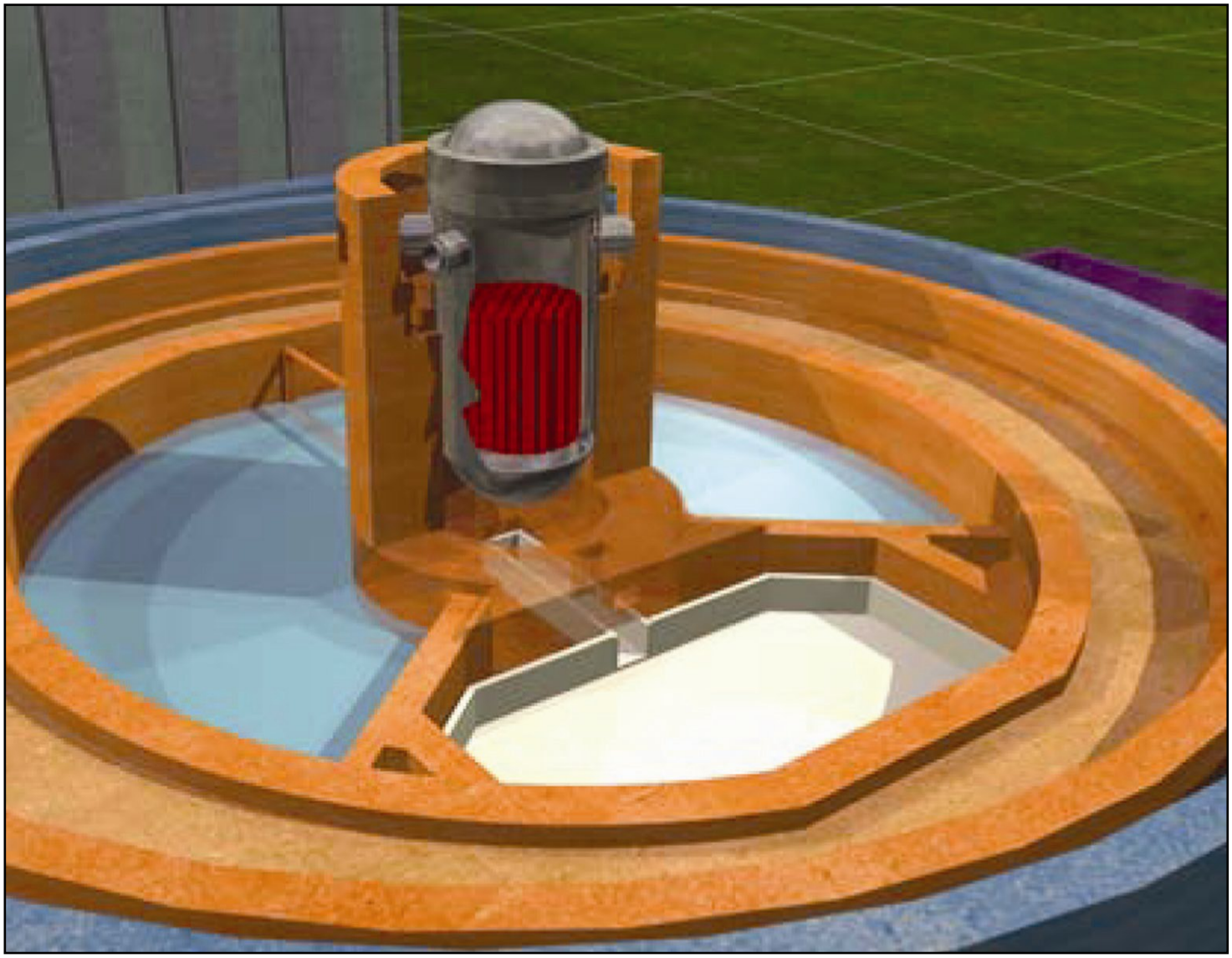

Figure 5-14
IRWST and Core Melt Spreading Area

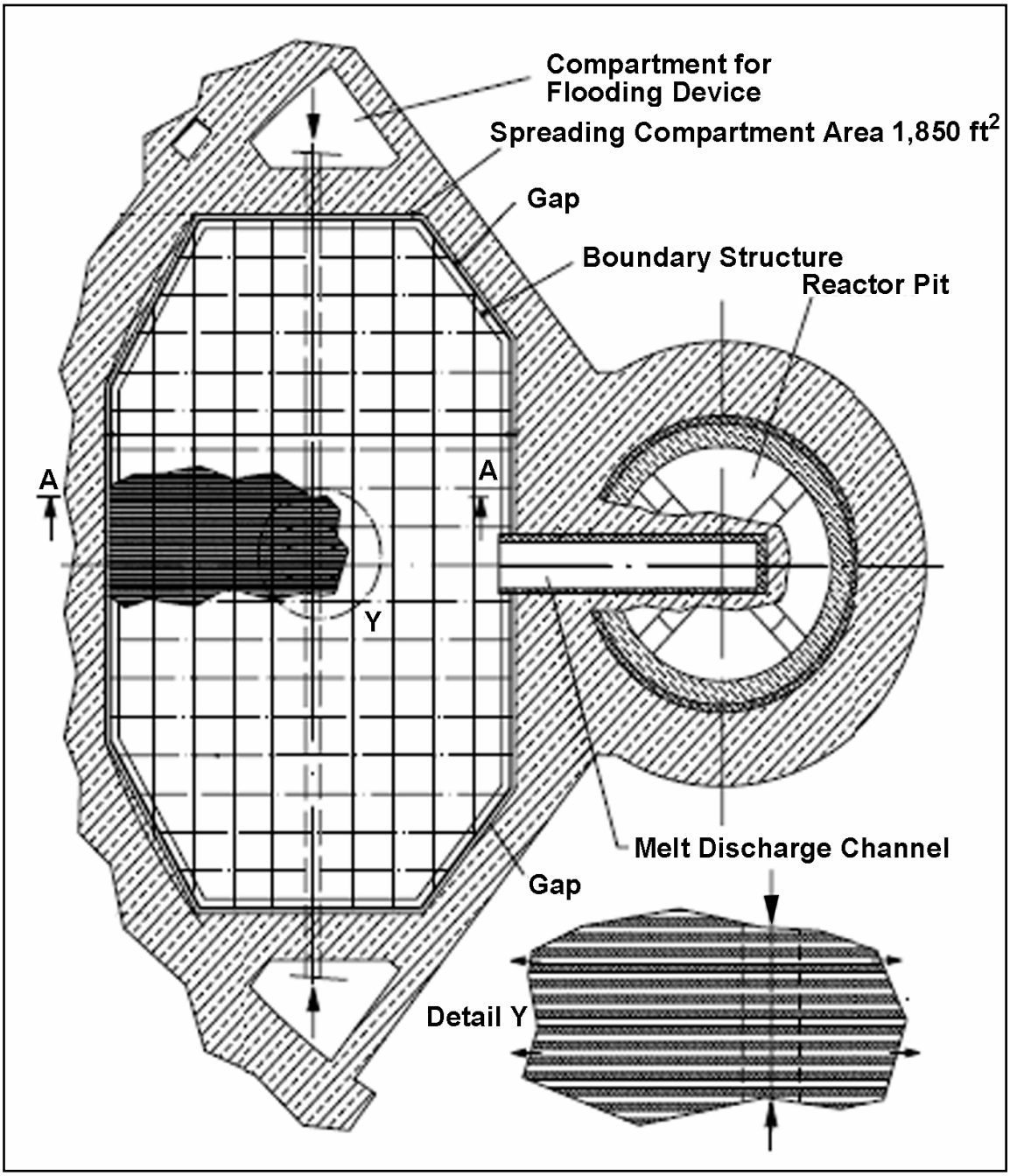

Figure 5-15
Spreading Area Cooling System

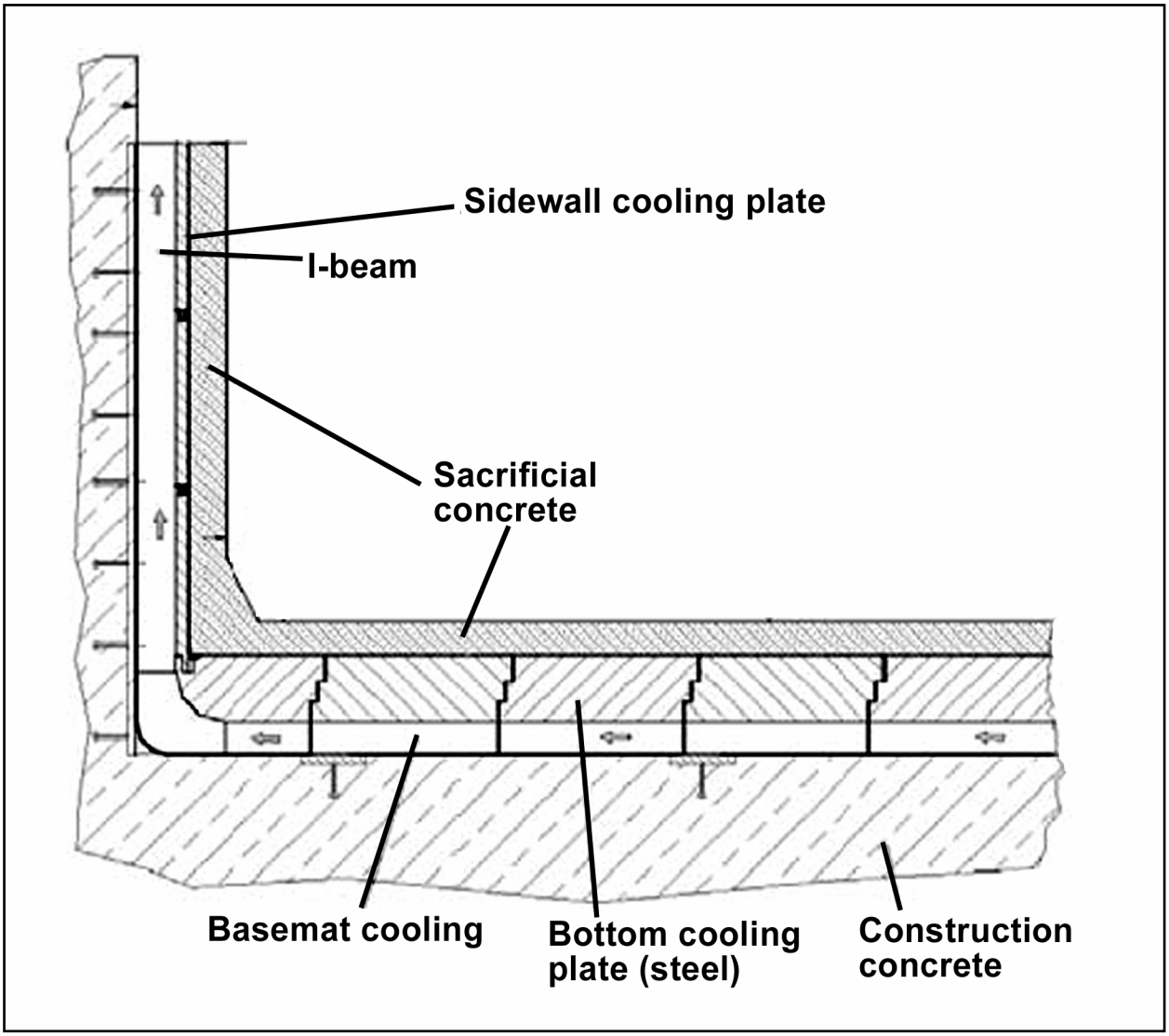

Figure 5-16
Detail of Core Melt Spreading Compartment

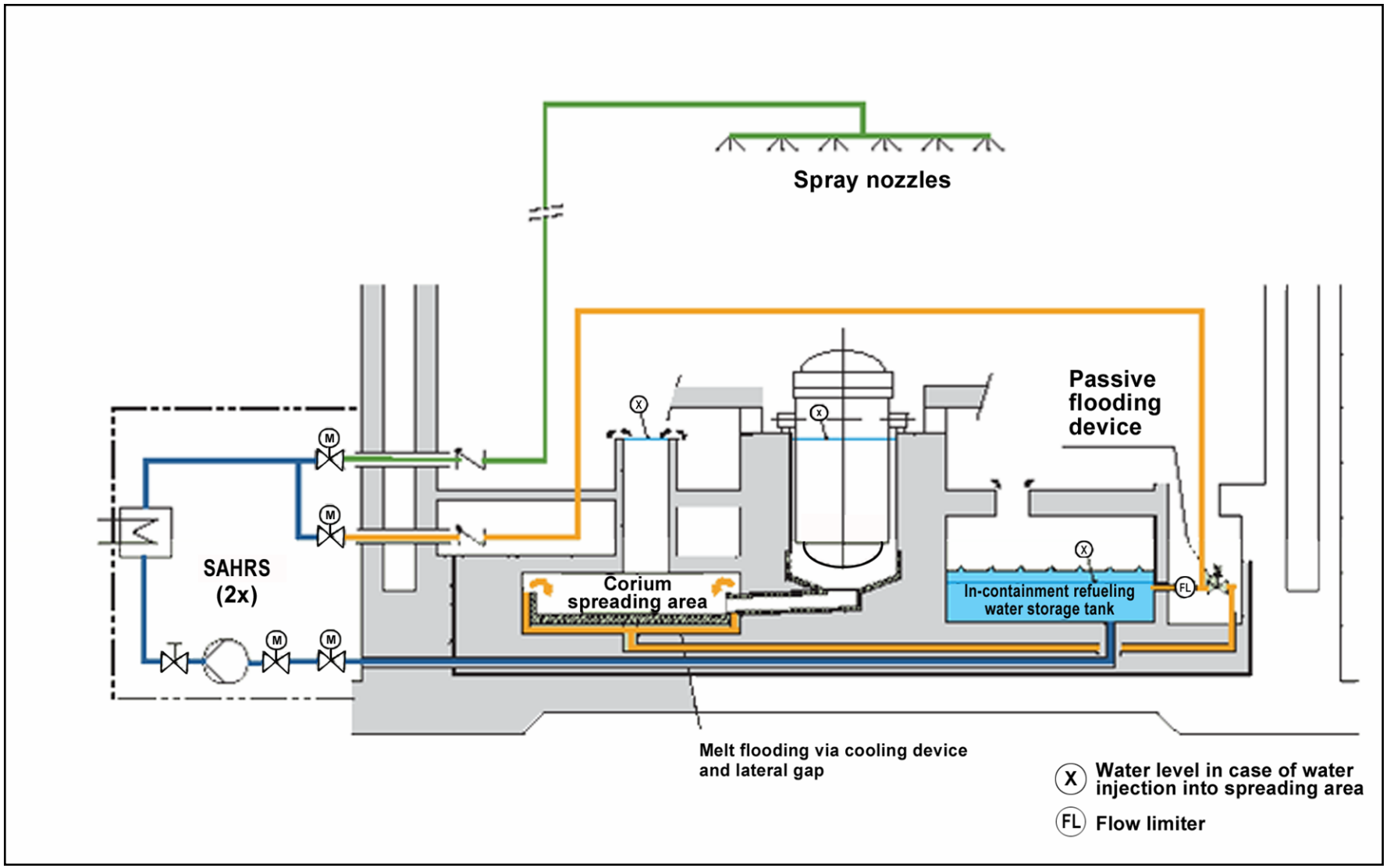

Figure 5-17
Severe Accident Heat Removal System

6.0 OTHER SAFETY-RELATED BUILDINGS

6.1 General Description

The Nuclear Island consists of the Reactor Building, Safeguard Buildings, and the Fuel Building, all of which are located on a common basemat. The Nuclear Auxiliary Building, two emergency Diesel Buildings, the Radioactive Waste Processing Building, and ESW intake structures are located on individual basemats.

Figure 6-1 shows the general layout of the major EPR Buildings.

Of these buildings and structures, those that are safety-related include the four Safeguard Buildings, the Fuel Building, the two Diesel Buildings that house the four EDGs and the two SBO generators, the vent stack, the ESW intake structure, the Nuclear Auxiliary Building, and the Radioactive Waste Processing Building. These safety-related buildings provide a physical arrangement that supports a four-train divisional separation for the integral systems and components of the EPR.

Each train of the safety systems is protected against propagation of internal hazards (e.g., fire, high-energy line break, flooding) from one train to any other. This requirement leads to an allocation of each train into a specific area or division that is separated from the other trains. According to the number of trains, the four Safeguard Buildings correspond to the four safety divisions.

Both the structural design and physical arrangement of the buildings provide protection from both external and internal hazards. Additionally, all safety-related buildings are designed to withstand the effects of the SSE and a tornado.

The EPR is designed to withstand an aircraft hazard and an EPW. The specific design basis for the EPR against the external hazards of an aircraft hazard and an EPW will be determined by the specific characteristics of the site on which the EPR will be located and in accordance with U.S. regulatory requirements.

The safety concept of aircraft hazard for the EPR is a combination of hardened structures and spatial separation and incorporates the following design considerations:

- Fully hardened by means of a protection shell for Safeguard Buildings 2 and 3, Reactor Building, and Fuel Building
- The Main Control Room and the Remote Shutdown Station (RSS) are located inside the fully hardened Safeguard Buildings 2 and 3
- The inner structures of Safeguard Buildings 2 and 3 and the Fuel Building are decoupled from the outer protection walls to isolate the consequences of an aircraft hazard
- Safeguard Buildings 1 and 4 are physically separated, limiting potential destruction to only one division
- The main steam and feedwater valve stations are physically separated two-by-two to perform their safety functions in the event of an aircraft hazard
- Safety functions performed by systems installed in other buildings (e.g., emergency diesels and ESWS) are ensured by physical separation

All buildings and structures, including cooling water structures and the auxiliary structures for gas supply, auxiliary boiler, and transformer foundation, are arranged based on economical optimization, hazard potential, and operation factors.

The Turbine Building is independent from the Nuclear Island. The turbine itself is located in a radial position with respect to the Reactor Building to avoid the impact of a turbine missile.

The Switchgear Building, which contains the power supply and the I&C for the balance of plant, is located next to the Turbine Building. Both buildings are designed on the basis of technical requirements and safety regulations and do not impact the Nuclear Island.

Radiation Protection

Radiation protection requirements reduce personnel exposure during operation and while performing in-service inspection and maintenance. The design target for the maximum collective dose exposure is less than 50 man-rem/yr.

The mechanical part of the Safeguard Buildings is separated into radiologically controlled ("hot") and non-controlled ("cold") areas. Those systems that are radiologically "cold" under normal conditions, such as CCWS and EFWS, are separated (including the dedicated access locations) from the systems that are radiologically "hot," such as the RHRS. This arrangement minimizes the necessity for personnel to enter contaminated areas.

Primary layout design features providing radiation protection include the following:

- Equipment is located in separate compartments (tanks/heat exchangers, pumps and valves) according to access requirements and anticipated radiation levels.
- Access to radioactive components is provided via shielded service routes and transition from areas with lower radiation levels to areas with higher radiation levels.

6.2 Safeguard Buildings

There are four Safeguard Buildings. All safety systems for the Safeguard Buildings are designed for redundancy into four trains and located in physically separated divisions. Safeguard Buildings 1 and 4 are spatially separated on opposite sides of the Reactor Building while Safeguard Buildings 2 and 3 are housed together in a hardened enclosure.

Each of the four Safeguard Buildings are separated into two functional areas:

- Mechanical Area
- Electrical, I&C and HVAC Area

Building isolation and filtering in the event of a release of radioactivity is ensured. In the event of an RHRS high energy line break, depressurization devices open to avoid inadmissible pressure buildup inside Safeguard Buildings 1 and 4. These depressurization devices reclose after RHRS isolation, thereby preventing release of radioactivity to the environment. Release of radioactivity to the ground water is also prevented by ensuring that all flood volumes are contained within the building.

The Safeguard Buildings are located close to the Reactor Building and contain the following:

- SIS

- CCWS
- EFWS
- SAHRS (only in Safeguard Building 1 and Safeguard Building 4)
- Main Control Room and Technical Support Center (TSC)
- Equipment for I&C and electrical systems of the Nuclear Island
- Safeguard Building ventilation and safety chilled water systems

The SIS design basis is a four-train independent system. In order to minimize the connection lengths to the RCS, the individual trains are radially assigned to the RCS loops. Net Positive Suction Head (NPSH) requirements for the safety injection pumps are satisfied by locating the pumps on the lowest level of the Safeguard Buildings.

The CCWS supplies the SIS/RHRS heat exchangers with cooling water. The CCWS is installed close to the connecting SIS/RHRS, but in a different radiation zone, as the activity level of both systems is different. The CCWS is located in a second outer row around the Reactor Building, in the radiologically non-controlled area of the Safeguard Buildings.

The EFWS is also located in the mechanical, radiologically non-controlled area of the Safeguard Buildings.

Mechanical Area

Each of the divisions in the mechanical area comprises a LHSI and a MHSI SIS. The LHSI combines the LHSI functions and the RHRS functions. These systems are arranged at the inner areas in the radiological controlled area, whereas the corresponding CCWS and the EFWS are installed at the outer areas in the radiological non-controlled areas on several levels.

In addition to the SIS in Safeguard Building 1 and Safeguard Building 4, the SAHRS is installed in the radiological controlled area to protect operating and maintenance personnel from high radiation from the SAHRS components following a severe accident.

Internal flood protection is provided on a divisional basis by ensuring that there are no connections between divisions below the flood level.

Electrical, I&C, and HVAC

The I&C and electrical equipment related to safety tasks, as well as those related to the operational functions of the Nuclear Island, are located within the Safeguard Buildings. The safety-related electrical systems, the I&C, the Main Control Room, and the divisional HVAC systems are arranged in the upper building levels. These areas are all classified as radiologically non-controlled. The Control Room complex is placed above them. At this level, the Main Control Room is installed in Safeguard Building 2 and the TSC in Safeguard Building 3.

All I&C and electrical equipment related to the functional requirements for the balance of plant are located in the Switchgear Building. The Switchgear Building is divided into two divisions. Each division is separated into an electrical equipment and a cable distribution area, each having its own shafts for cables, supply/exhaust air, and smoke control. The Switchgear Building is situated on a foundation slab with two basement levels plus three stories above. Ventilation equipment for these buildings is installed

on the roof. The building structure consists of reinforced concrete columns and walls as well as masonry walls, where applicable.

Heating, ventilation, and air conditioning for each electrical division (Safeguard Buildings 1, 2, 3, and 4) is provided by its own HVAC system. Normally, the functions are ensured by a 1 x 100% safety train without cross connection to neighboring divisions. During maintenance, these functions are ensured by a 1 x 100% non-safety-related train that is common for two divisions (1/2 and 3/4).

The air supply for the mechanical area of each Safeguard Building is provided by the air supply system of its own electrical division. For Safeguard Buildings 1 and 4, the Safety Chilled Water Systems are equipped with air-cooled chillers installed on upper levels within the Safeguard Buildings. For Safeguard Buildings 2 and 3, the safety-related Chilled Water Systems are equipped with CCWS-cooled chillers. Each train of the Chilled Water System is designed to cool one of the trains of the air supply and the corresponding Main Control Room ventilation systems.

The HVAC for the Main Control Room and associated rooms is located inside the fully-hardened Safeguard Building 2 and Safeguard Building 3.

Main Steam and Feedwater Valve Stations

The Main Steam and Feedwater Valve Stations are arranged in a 2-by-2 configuration, with the lines of Divisions 1 and 2 located in a main steam valve house enclosure at the top of Safeguard Building 1 and the lines of Divisions 3 and 4 at the top of Safeguard Building 4. This physical separation and the main steam valve house enclosure provide protection against external hazards. The valve stations are physically protected by walls against internal hazards.

6.3 Fuel Building

There is a complete separation within the Fuel Building between operating compartments and passageways, equipment compartments, valve compartments, and the connecting pipe ducts. Areas of high activity are separated by means of shielding from areas of low or no activity.

External hazard protection is achieved by full hardening of the structure. The inner building structures are decoupled from the outer protection wall to ensure the integrity of the systems and components within the Fuel Building.

The pool for spent fuel assemblies is located outside the containment in the Fuel Building to:

- Provide the possibility of cask loading outside the containment during plant operation
- Provide a sufficient spent fuel capacity without influencing the containment diameter

Building isolation and filtering is ensured in the event of a release of radioactivity inside the building. Inadvertent release of radioactivity to the environment and ground water is prevented.

Fuel storage and handling equipment include the following features:

- Storage of spent and new fuel assemblies outside the containment
- Sufficient storage capacity including full core unloading during outage
- Fuel assemblies are transferred via the transfer tube from inside the containment to the outside and vice versa

- The fuel transfer tube is closed from both sides during normal operation
- For fuel cask handling, the layout of the building is based on loading via the bottom using a dedicated cask loading device

The SFP consists of a single pool with two regions.

The mechanical floor levels below grade house the FPCS, the EBS, and the CVCS. Redundant trains of these systems are physically separated by a wall.

Above grade level and up to the operating floor, one side of the Fuel Building is dedicated to the SFP, cask loading pit, transfer station, and the storage and inspection compartments for new fuel assemblies. The accident exhaust air filtration units, AVS, and parts of the containment sweep ventilation system are located on the other side of the Fuel Building, as well as the VCT of the CVCS and the two boric acid storage tanks. This depends on the site and orientation.

The operating floor is divided into two areas, the SFP area and the setdown handling/transport area in front of the equipment hatch. The setdown handling/transport area is connected to the outside by two doors where all of the main equipment, components, and tools are handled. The setdown/handling area in front of the hatch is also connected via a large door to the maintenance and setdown area of the Nuclear Auxiliary Building.

If the large door for the spent fuel cask docking station is opened, the cover for the transportation opening inside this room can be closed. The cover is air-tight, fulfilling the airlock function between the loading area and the operating floor of the SFP area.

6.4 Nuclear Auxiliary Building

The Nuclear Auxiliary Building is located on a separate basemat from the Nuclear Island and contains additional safety-related systems including:

- Boron Recycle System (coolant and demineralized water storage, coolant treatment and coolant purification)
- Fuel Pool Treatment System
- Gaseous Waste Processing System (GWPS)
- Portions of the Steam Generator Blowdown System
- Nuclear Auxiliary Building ventilation and Operational Chilled Water System

There is complete separation within the building between operating compartments and passageways on one hand, and equipment compartments, valve compartments and the connecting pipe ducts on the other. Areas of high activity are separated by means of shielding facilities from areas of low or no activity. It is not necessary to pass through compartments with a high dose rate to enter ones with a lower dose rate.

The isolation of the building is ensured in the event of a release of radioactivity inside the building to avoid inadvertent release of radioactivity to the environment. The basemat of the building is designed to be leak tight to avoid release of radioactivity to the ground water.

The Nuclear Auxiliary Building is safety-related and is designed against a SSE, tornado winds and missiles, external flooding, and an EPW.

A portion of the building is designed as a radiological non-controlled area in which parts of the operational chilled water system are located. Special laboratories for sampling systems are located on the lowest level. Air exhausts from the radiological controlled areas of the Nuclear Island Buildings are routed, collected, and controlled within the Nuclear Auxiliary Building prior to release through the stack.

6.5 Diesel Buildings

There are two Diesel Buildings. The two Diesel Buildings house all four EDGs and the two SBO diesel generator sets along with their diesel fuel storage tanks. Related electrical, I&C and HVAC equipment are also contained in the Diesel Buildings.

The two Diesel Buildings are located on opposite sides of the plant, providing physical separation for protection against external hazards.

Each Diesel Building contains two redundant trains comprised of the main diesel generators for emergency power supply, and one SBO diesel generator. The two redundant main diesels and the SBO diesel generator, including related equipment, are protected against internal hazards by divisional separation.

The general layout of each Diesel Building from bottom to top is listed below:

- Fuel storage tanks (within a dedicated fire compartment)
- Diesel generators including local control panels
- HVAC for electrical and HVAC exhaust air
- Battery room with electrical and service tank (zone SBO-Diesel only)
- Service tank, handling room and HVAC room for underground piping and cable tray duct runs (main diesels only)
- Engine air cooling equipment (zone SBO-Diesel only)
- Air cooling equipment (main diesel only)
- Roof level with silencer for diesel engines

The doors at grade level leading into the open air are sound-absorbing and include special fittings to prevent entrance by unauthorized persons.

6.6 Radioactive Waste Processing Building

The Radioactive Waste Processing Building is used for the collection, storage, treatment and disposal of liquid and solid radioactive waste and is adjacent to the Nuclear Auxiliary Building. A basement extends underneath the entire building. The building has a total of seven full stories that contain all the components required for liquid and solid radioactive waste processing.

As with the Nuclear Auxiliary Building, there is a complete separation within the building between operating compartments and passageways on the one hand and equipment compartments, valve compartments and the connecting pipe ducts on the other. Areas of high activity are separated by means of shielding facilities from areas of low or no activity. It is not necessary to pass through compartments with a high dose rate to enter ones with a lower dose rate.

The Radioactive Waste Building is designed against the SSE and a tornado.

Isolation of the building is ensured if radioactivity is released inside the building and the basemat of the building is designed to be leak tight.

The Radioactive Waste Building is supported on a shallow reinforced-concrete slab foundation which is separated from the adjacent foundation of the Nuclear Auxiliary Building by a settlement joint permitting relative movement. The design of the outer and internal walls is based on the results of structural analyses and on requirements for radiation protection.

6.7 Vent Stack

The vent stack is located between the Fuel Building and the Safeguard Building.

The vent stack design basis is Seismic Category 1, constructed of reinforced concrete with smoothed surfaces inside and outside.

The vent stack is designed for:

- Exhaust air flow parameters defined by the HVAC equipment
- Tornado missiles
- Wind loads
- SSE
- EPW

The vent stack system ensures discharge of filtered air from the buildings within the controlled access area to the atmosphere at an elevation that meets dispersion requirements.

The Nuclear Auxiliary Building HVAC system exhaust air ducts lead to the roof of the staircase between the Fuel Building and Safeguard Building 4 and from there directly to the vent stack.

6.8 Essential Service Water Pump Buildings

The ESW Pump Buildings are located near the circulating water pump house and are connected to it by means of bypass ducts. The ESWS is arranged in two trains, each containing two ESW pumps at each side of the circulating water structures, separated by a sufficient distance to ensure protection against an aircraft hazard.

The circulating water, which is mechanically cleaned in the Circulating Water Pump Building, is transferred to the essential service water pumps in the Essential Service Water Pump Building. From there the circulating water is pumped into the service water lines.

The Essential Service Water Pump Buildings are designed for external hazards, including SSE, EPW, tornado winds and missiles.

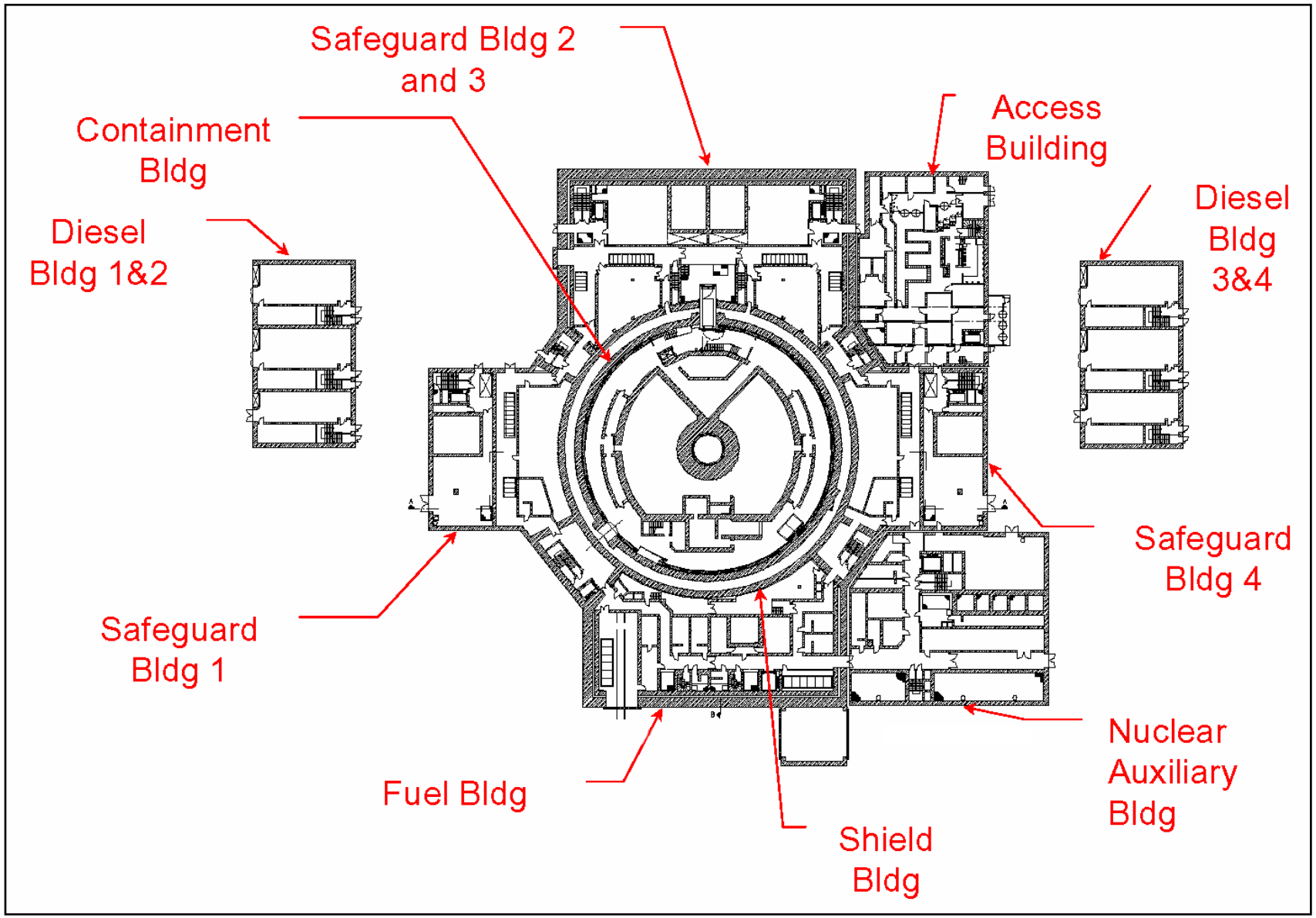

Figure 6-1
Layout of Major EPR Buildings

7.0 ELECTRICAL POWER AND INSTRUMENTATION AND CONTROL SYSTEMS

7.1 Electrical Power System

Some of the more important electrical system features of the EPR are described in this section.

7.1.1 General

The basic power supply for the EPR operates at 60Hz, with voltage regulated through a site/utility specific transmission grid. Figure 7-1A and Figure 7-1B are single-line diagrams illustrating the distribution network.

This 3-phase AC onsite Electrical Distribution System (EDS) powers all plant auxiliary loads and is designed to utilize standard U.S. voltage levels. Expected EDS system voltages (excluding the transmission grid) are 208/120V, 480V (including 480/277V for lighting), 4160V, and 13.8 kV.

The EDS is designed as a 4-train, 4-division system. Most non-safety related plant loads are powered from the Turbine Island 4-train Normal Power Supply System (NPSS) of the EDS while engineered safeguard loads as well as a few non-safety related loads are powered from the Nuclear Island 4-division, Emergency Power Supply System (EPSS) of the EDS.

The RCPs and a few non-safety related loads are powered from the Nuclear Island NPSS.

During plant on-line/power operation, electrical power is supplied from the main generator via the main step-up transformer to the main switchyard and the plant EDS via two auxiliary normal transformers. Each transformer powers two trains and two divisions and about half of the total plant auxiliary load.

During plant off-line/shutdown periods, power to the EDS is supplied from either the main switchyard via the auxiliary normal transformers, or the standby switchyard/transmission grid via a single auxiliary standby transformer.

The plant can accept a generator load rejection from 100 percent power or less without a reactor or turbine trip while stable operation continues. During such an event, the generator breakers (i.e., those that connect the main step-up transformer and auxiliary normal transformers to the main switchyard) will trip, but the connection from the generator to the auxiliary normal transformers via the main step-up transformer remains online. Consequently, the plant can continue to operate (within administrative/license limits associated with available off-site sources) in island mode while powering all house loads.

The EPSS is normally powered directly from the Turbine Island NPSS. However, in the event of a loss of off-site power or a degraded grid event (with or without a concurrent design basis accident), the EPSS is automatically disconnected from the NPSS while four EDGs (one for each division) re-power the EPSS. As previously described, the EDGs are housed in buildings separated from the rest of the plant.

The EPSS has four Uninterruptible Power Supply (UPS) channels (one per division) consisting of batteries, battery chargers, inverters, and associated distribution panels. Emergency power is also available from two additional diesel generators provided as alternate AC sources for coping with postulated SBO events.

7.1.2 Off-Site Power

Off-site power for the EPR is provided in compliance with 10 CFR 50, Appendix A, General Design Criterion 17. This design criterion requires that each plant's onsite EDS be supplied by two physically independent circuits designed and located to minimize, to the extent practical, the likelihood of their simultaneous failure under operating and postulated accident and environmental conditions. For the EPR, these two circuits consist of:

- The auxiliary normal transformers and their high-side connections to the main switchyard (expected to be in the range of 230 kV to 500 kV) and their low-side connections to the 13.8 kV NPSS buses
- The auxiliary stand-by transformer and its high-side connections to the standby switchyard (expected to be in the range of 115 kV to 500 kV) and its low-side connections to the 13.8 kV NPSS buses

The auxiliary normal transformers and the auxiliary stand-by transformers are automatic load tap changing power transformers that are set to maintain steady-state EDS voltages within optimal utilization voltage levels.

7.1.3 Emergency Power Supply System

The EPSS is arranged in four divisions, each separate and independent from the other three and each with its own EDG consistent with 4-division process safety systems. Safety loads and some non-safety loads are connected to the EPSS, as previously mentioned. Safety loads are those necessary to shut down the reactor safely; maintain it in a shutdown condition; remove residual and stored heat; mitigate accidents; and prevent excessive release of radioactive substances under accident conditions.

7.1.4 Station Blackout Power Supply System

The SBO power supply system is part of the EPSS. Two separate and independent SBO diesel generator units are provided as alternate AC sources for coping with postulated SBO events (i.e., loss of both the off-site power supply and all four of the onsite EDGs). Loads necessary for non-accident safe plant shutdown are powered from the SBO diesels.

At the start of the SBO event, the two-hour rated EPSS batteries supply DC power for required loads including inverters and their critical loads. Early in the two-hour period, the SBO diesels are started manually from the control room.

7.1.5 Uninterruptible Power Supply System

The UPS system is part of the EPSS and provides four UPS channels. Batteries and inverters provide an assured source of power for essential low-voltage DC and AC loads.

Each battery charger is sized for the capability to recharge its fully discharged battery while concurrently supplying its largest combined demand of various essential steady-state loads. With a full charge and the charger not operating, each battery is capable of supplying power under the worst-case design basis event loads for two hours.

In addition to the four two-hour rated batteries, two supplemental 12-hour rated batteries are provided, one each for divisions 1 and 4. These supplemental batteries are provided for severe accident mitigation and increase the coping time for restoration of AC power.

7.2 Instrumentation and Control System

The functions of plant I&C systems are:

- Control and monitoring of the plant systems functions during normal conditions
- Control of plant functions that are implemented to initiate corrective measures in the case of deviation from LCO
- Control of limitation functions that are implemented to initiate corrective measures in order to avoid protective actions
- Control of protection functions that are implemented to mitigate the consequences of a design basis event, up to reaching a controlled, stable state following the detection of a design basis event
- Control and monitoring of post-accident functions that are implemented to mitigate the consequences of a design basis event, and to bring the plant from the controlled state down to the safe shutdown state
- Control of functions that are implemented in order to mitigate the consequences of a beyond design basis event

7.2.1 Basic Architecture and Level Structure

The different roles of the systems and plant requirements lead to an I&C architecture level structure as follows:

- Level 0: Process Interface
- Level 1: System Automation Level
- Level 2: Unit Supervision and Control Level
- Level 3: Site Management Level

The systems and equipment of Level 3 are not discussed in this document. (Examples of Level 3 systems would be business and financial networks, and related site management systems).

Different general design requirements correspond to these levels. All I&C systems are designed to withstand the environmental conditions that exist in the rooms or locations where they are installed so that they properly perform their design functions. Additionally, Level 2 systems are ergonomically designed.

Classification

The I&C functions and equipment are categorized as safety-related (Class 1E), quality-related, and non-safety-related according to their importance to safety. All portions of the I&C systems and equipment needed to perform a given I&C function are classified according to the highest class functions they must perform.

Diversity

The I&C architecture is designed to distribute diverse I&C functions into an appropriate number of different safety I&C systems to meet the required probabilistic targets. Two complementary types of diversity are implemented in the design in order to reduce the risk of common-mode failures as defined below.

- Functional Diversity -- Functional diversity provides two separate I&C functions based upon two different methods of detecting a condition in order to initiate the same type of protective action.

- Equipment Diversity -- Equipment diversity consists of providing the same function through two different hardware platforms in order to preclude a common-mode failure taking out a function.

The separate I&C systems have adequate independence and diversity features to minimize the risk of common mode failures (hardware and software).

Description of the I&C Architecture

The I&C architecture, shown in Figure 7-2 fulfills the operational, licensing, and safety requirements to operate the plant and perform protective functions.

The unit supervision and control level (Level 2) consists of the work stations and panels of the Main Control Room, the RSS, the TSC, as well as the Process Information and Control System (PICS) and Safety Information and Control System (SICS), which act as interfaces between the MMI and the automation systems.

The system automation level (Level 1) consists of the following systems:

- Protection System (PS)
- Safety Automation System (SAS)
- Process Automation System (PAS)
- Priority and Actuator Control System (PACS)
- Reactor Control, Surveillance, and Limitation (RCSL) System

The process interface (Level 0) comprises the interface with the sensors, actuators, and switchgear.

The instrumentation is categorized according to the specific nuclear requirements for the measurements listed below.

- Process instrumentation
- Radiation instrumentation
- Accident instrumentation
- In-core instrumentation
- Ex-core instrumentation
- Flux mapping system
- RPV level instrumentation
- Rod position measurement
- Loose part and vibration monitoring
- Seismic instrumentation
- Hydrogen detection system
- Advanced boron instrumentation

Operators use the workstations and the plant overview display in the Main Control Room to operate and monitor the plant. Signals from and to the workstations and the plant overview panel are processed by PICS and handed down to PAS and RCSL.

In the event of a design basis event, all functions necessary to reach the controlled state (Class 1E functions) are initiated by the PS. The functions to reach the safe state (quality related class functions) are either automatically generated in the SAS or manually initiated and processed by PICS and SAS.

If PICS fails, the operators use SICS together with PS and SAS for unit control and safe shutdown.

If one of the Level 1 systems, PAS, RCSL, PS, or SAS, fails, the remaining I&C systems in the other lines of defense are sufficient to shut down the plant and keep it in a safe shutdown state.

In the event that the Main Control Room is not accessible, the plant is monitored and controlled from the RSS, making use of PICS, PAS, and RCSL. The SAS and PS are available to initiate corrective actions, if necessary.

Depending upon the different tasks of the I&C functions, contradictory commands could be given by the different I&C functions to particular actuators. Therefore, general priority rules are established so that any potential command will be assigned to a defined priority level.

The following general rules are applied for all actuators in the plant:

- Higher classified functions have priority over commands from lower classified functions. The order of priority is: (1) Class 1E, which has priority over (2) quality-related class which has priority over (3) non-safety related functions.
- The order of priority between different categories of I&C functions within the quality related class is: (1) highest priority for control of beyond design basis events, then (2) limitation function, and at the lowest level, (3) limitation of operating condition.
- The principal order of priority within each I&C category in all classes is: (1) highest priority for component and system protection, then (2) automatic action, and at the lowest level, (3) manual action. Automatic control functions may be switched off if the process conditions allow.

7.2.2 Man-Machine Interface

Due consideration is given to human factors at the design stage, taking into account operation, testing, and maintenance requirements. The general aim is to minimize the likelihood of operator error and lower the demands on the operator. For this purpose, appropriate ergonomic design principles are implemented and sufficiently long grace periods are made available to the operators. The necessary time duration depends on the complexity of the situation to be diagnosed and the actions to be taken (i.e., in the Main Control Room, in the RSS, or locally).

Sufficient and appropriate information supplied by the I&C systems provide a means for clearly understanding plant status during normal operation, design basis events, and beyond design basis events, and for evaluating the effects of actions taken.

The MMI facilities are subdivided into the following main items:

- The central, permanently staffed Main Control Room
- The RSS staffed on demand, if the Main Control Room becomes inaccessible
- Local control stations staffed on demand
- The TSC

7.2.3 Main Control Room

During all plant conditions (except if the Main Control Room becomes inaccessible) the plant is supervised and controlled from the Main Control Room. The Main Control Room is equipped with essentially identical operator workplaces consisting of PICS-driven screens (video display units) and soft controls. These operator workplaces provide for the following staffing arrangement:

- Two of the operator workplaces are staffed during normal plant operations.
- A third operator workplace is staffed during plant states requiring increased operating and monitoring tasks (e.g., refueling period).
- A fourth operator workplace is used by the shift supervisors.

Additional monitoring and control equipment in the Main Control Room include:

- The plant overview panel consisting of several large PICS-driven screens that provides overviews of plant status and main parameters.
- The safety control area with the SICS displays and controls are available as back-up in case of unavailability of PICS.
- Fire detection and fire fighting controls and site closed circuit TV monitoring screens.

7.2.4 Remote Shutdown Station

If the Main Control Room becomes inaccessible, the operators supervise and control the plant from the RSS. The RSS is equipped with:

- Manually-actuated switches for disconnecting all the Main Control Room equipment that may generate component actuation of the Level 1 systems and placing the RSS workstations in the control mode. Technical and administrative precautions prevent spurious or unauthorized actuation of this function.
- Two operator workplaces consisting of PICS-driven screens (video display units) and soft controls that are of the same type and provide the same functionality as those in the Main Control Room. The operators can bring the plant to safe shutdown state and monitor plant conditions from these operator workplaces.
- Communication equipment for maintaining communications with other plant personnel.

7.2.5 Technical Support Center

The TSC is used by the technical support team in the event of an accident. The additional staff in the TSC analyzes the plant conditions and supports post-accident management. The TSC is equipped with PICS screens that have access to plant information. No process control function is available in the TSC. Appropriate communications equipment is also provided in the TSC.

7.2.6 Description of I&C Systems

7.2.6.1 Protection System

The PS is the main I&C line of defense and performs the automatic Class 1E functions that are needed to bring the plant to a controlled state if a design basis event occurs. The PS performs its safety functions to ensure:

- The integrity of the RCPB

- The capability to shut down the reactor and maintain it in a safe shutdown condition
- The capability to prevent or mitigate the consequences of accidents which could result in potential off-site exposures

Several examples of PS actions include tripping the reactor, actuating containment isolation, actuating emergency core cooling, initiating ATWS mitigation actions, and performing EFW system protection and control (i.e., actuation, isolation, and pump run-out protection). A complete list of PS signals and resulting functions are shown in Table 7-1. Under "Signals", the numbers 1, 2, 3, 4 after some signal names signify different values of the particular parameter that initiates the actuation circuitry.

In addition to the examples listed above, the PS initiates partial cooldown of the steam generators following a low-low pressurizer pressure signal (MHSI actuation signal) to ensure that reactor coolant pressure, following very small break LOCAs or a SGTR, is well below the MHSI shut-off head (Figure 7-3). In the event of a SGTR, the PS will also automatically isolate the affected steam generator on high-high water level once the partial cooldown is complete. These actions ensure that certain key elements of design basis mitigation strategy are met:

- Ensure safety injection flow sufficient to meet all acceptance criteria
- No operator actions required for 30 minutes (all mitigation functions for a LOCA and SGTR are performed by PS)
- Timely isolation of the affected SG during a SGTR to prevent overfill and terminate the potential release of radioactivity

The PS is a digital I&C system, located in dedicated cabinets in the Nuclear Island. The system is implemented in four divisionally separate trains, each with its own Class 1E power source. Additionally, each PS cabinet has redundant power supplies for its electronics. The PS is functionally independent of all other I&C automation systems, thereby ensuring that the failure of one of those systems does not prevent the PS from performing its safety functions. The system can process Class 1E (and lower classified) functions.

The primary function of the PS is to initiate automatic reactor trips, actuate engineered safety features, and start their support systems. The PS reactor trip function utilizes voting logic in order to screen out potential upstream failures of sensors or processing units. The PS manages all permissions used in the logic for the execution of the automatic protective actions and also provides the capability to perform manual actions on safety systems.

Safety parameter information is provided by the PS for the SICS and the PICS and gathers signals from various Class 1E process sensors and components. The process variables, initiation signals, and actuation signals of the PS are displayed to the plant operators by the PICS and the SICS. Safety interlocks are incorporated in the PS, defeating manual initiation and resetting automatic functions by the PICS or SICS if the process conditions do not warrant manual actuations.

Connections with other I&C systems are implemented through isolated channels to maintain complete independence. The PS is a self checking system which is able to perform continuous self-diagnosis for many conditions and alert the plant operators to unusual conditions or internal failures. The PS also includes equipment dedicated to periodic testing and maintenance.

7.2.6.2 Safety Automation System

The SAS is devoted to automatic control, manual control, and measuring and monitoring functions needed to bring the plant to a safe shutdown state. It provides for the following:

- Post-accident automatic and manual control as well as the monitoring functions needed to bring the plant from a controlled state to the safe shutdown state
- I&C functions related to the support systems of safety systems if they do not change their status during an event
- The automatic initiation of I&C functions, to prevent a spurious actuation that could result in design basis accidents
- Functions preventing radioactive releases

The SAS performs its functions via a closed loop control, a sequencing control, a combination control, data acquisition, a drive control, and alarm generation and processing. The SAS is a digital I&C system that receives process data from plant instrumentation and switchgear; process data from the PS; and some control signals from the SICS and the PICS. The SAS sends actuation signals to PACS modules or switchgear and monitoring signals to the SICS and PICS. It can perform quality related (and lower classified) functions, as well.

7.2.6.3 Priority and Actuator Control System

The PACS consists of individual modules that control one safety actuator only. These individual modules may be common to different defense lines as they are using the same actuators and thus have to fulfill the high availability and reliability requirements against common cause failures.

The system can perform Class 1E (and lower classified) functions, as well. The priority and drive control sub-functions for actuators of quality related class and non-classified class are implemented in PAS, RCSL, or possibly the switchgears.

For the Class 1E actuators that also support functions of a lower class, the PACS performs drive monitoring; priority management between control signals of different safety classes; actuator specific commands for essential component protection; and drive actuation. The priority of actuation signals coming from the PS, SAS, or PAS is managed by the priority function of the PACS. Actuators shared by different safety classifications are always controlled in the direction required by the actuation signals of the I&C system having the highest safety classification, even if a lower safety classification system simultaneously requires another direction.

In addition to handling these priority functions, the PACS performs the drive control functions, including drive actuation, drive monitoring, and essential component protection (such as equipment overloads and trips).

7.2.6.4 Reactor Control, Surveillance and Limitation System

The RCSL implements the automatic functions, manual actions and monitoring functions needed to control and limit the main reactor and Nuclear Steam Supply System parameters including:

- Core related parameters (i.e., reactor power, power density, reactivity)
- RCS parameters (i.e., RCS pressure, PZR level, RCS temperature, RCS loop level)
- Nuclear Steam Supply System parameters (SG level)

In order to monitor and control its assigned parameters, the RCSL system implements the following types of functions:

- Closed loop control functions
- Automatic limitation functions for improvement of plant availability

- Automatic limitation functions to ensure the LCO
- LCO surveillance functions

The RCSL system includes eight RCSL function computers in four spatially separated divisions, a monitoring service and interface network, and a service unit.

The RCSL function computers perform the automatic RCSL functions. Two redundant RCSL computers in each division operate in a master-hot standby configuration.

Input signals to any one of the four spatially separated divisions are acquired by the two redundant RCSL function computers. The two redundant RCSL computers perform the same I&C functions, if necessary. The output signals of both redundant computers are electrically combined before leaving the system. The master computer enables its output signal while the standby computer disables its output signal. A switch over of the master redundancy status can be triggered manually by means of the service unit or automatically by fault detection.

The monitoring service and interface network is used for:

- Digital interface with systems (PICS, PAS)
- Surveillance of the RCSL system equipment
- Connection of each RCSL function computer with the service unit

The service unit is used for activation of maintenance tasks.

Although the RCSL function computer equipment and the network connecting the subsystems to each other are suitable to perform Class 1E functions, the RCSL functions are classified as quality-related.

7.2.6.5 Process Automation System

The PAS implements the automatic control, manual control, and monitoring functions that are classified as quality-related or non-classified functions. The PAS is a digital I&C system that performs functions such as normal feedwater control, normal steam system control, and normal support systems control.

For feedwater system control, the PAS provides SG level controls that act upon the full load and low load control valves in order to maintain the SG levels within acceptable limits. The control signals utilized for SG level control are feedwater temperature, control valve position, and feedwater flow rate. Various feedback control loops are provided to control other plant functions such as steam supply, water, and other fluid systems.

The functions of the PAS are monitored and controlled by the plant operators via the PICS. If the PICS becomes unavailable during normal plant operation, the limited functions of the PAS which are required to maintain the plant in a stable state can be monitored via the SICS.

7.2.6.6 Process Information and Control System

The PICS is a Level 2 system and is used in all plant conditions by the operators to monitor and control the plant. PICS employs computers, video display units, and soft controls. It has access to all Level 1 systems and presents information to the plant operators at the following MMI devices and locations:

- Screens for monitoring and control at the operator workstations in the Main Control Room
- Screens for monitoring at the shift supervisor’s location

- Large screen or projected video display for the plant overview display in the plant Main Control Room
- Screens for monitoring and control in the RSS
- Screens for monitoring in the TSC
- Printing stations and information recording/archiving stations

The PICS displays alarms in the event of abnormalities in processes or systems and provides guidance to the operators in order to perform the appropriate corrective actions. It can perform non-safety related functions, as well.

The PICS design considers the quality of displayed information and ease of operation of actuator controls. Compliance with recognized ergonomic principles and navigation techniques between various operation displays are key factors in ensuring efficient and error-free operation.

7.2.6.7 Safety Information and Control System

The SICS is also a Level 2 system and is used by the Main Control Room operators in the event of unavailability of PICS (due to PICS-internal failure or other causes). In this case, the operators use SICS to monitor and control the plant for a limited time in steady state power operation and bring the plant to and maintain it in shutdown state (non-safety related functions), if PICS cannot recover within 2 to 4 hours.

In design basis events, with PICS unavailable, SICS makes it possible to:

- Monitor the safety functions of the plant, especially the automatic protective actions and post-accident functions (quality related class)
- Manually control the post-accident functions necessary to bring the plant from the controlled state to the safe shutdown state (quality related class)
- Monitor and manually control the support systems of safety systems needed for post-accident control (quality related class)
- Initiate automatic I&C functions to prevent spurious actuation that could otherwise cause design basis accidents

In the event of an accident with PICS unavailable, the member of the operating crew who is in charge of monitoring the actions of the shift team uses the SICS to obtain information.

When the SICS is not needed, its controls are deactivated to reduce the risk of spurious actuations due to any possible hazards or internal equipment failures within the SICS.

7.2.6.8 Communication

Each I&C system manages its own internal exchanges (including data exchange between divisions) without using external resources, when reasonable. Data is exchanged between the different I&C systems primarily through standard network or standard exchange units connected to the corresponding system networks. The design of the communication between the systems assumes the same failure mechanisms as the I&C systems (single failure criterion, preventive maintenance, hazards and common mode failure).

7.2.7 Instrumentation

The instrumentation is organized according to the nuclear specific requirements.

The classification of the instrumentation channels follows the classification of the safety functions to which they feed signals. The instrumentation is designed to monitor process variables with sufficient accuracy and response time in all plant states in which they are needed. Self-monitoring and self-testing are implemented (within reason), as well as remote calibration and testing.

7.2.7.1 Process Instrumentation

Process instrumentation includes the sensors and transducers needed to measure thermal-hydraulic process parameters such as pressure, temperature, flow, and level. Appropriate connections are provided for isolation, maintenance, and testing of sensors and transducers.

7.2.7.2 Radiation Monitoring

The radiation monitoring system detects ionizing radiation and radionuclide transport. Its purpose is to monitor and document when prescribed values have been detected, and in the case of deviations from these values, to record the deviation and initiate countermeasures. This functionality is achieved through:

- Continuous monitoring of radioactivity in the plant systems by means of fixed measuring instruments (process monitoring)
- Continuous monitoring of radioactivity of the plant environment and work areas by means of fixed measuring instruments (area monitoring)

The measuring instruments are designed to function properly under normal operating conditions as well as during and after accident situations.

The measuring points consist of radiation detectors connected to electronic transducers which convert the measurement into digital information signals. These digital information signals are sent to the Process and Information Control System (PICS) and the SICS which perform the monitoring functions.

Additionally, the radiological instrumentation feeds signals to the central radiological computer system that processes radiological data, displays information, and generates alarms. The central radiological computer system also captures data from the meteorological system and calculates propagation of radioactivity into the plant environment.

The safety classification of each measuring point is assigned based on the I&C function that uses its measurements. Redundancy requirements of this system are met by using at least two mutually independent instrument arrangements in a parallel configuration.

In addition to providing information signals to PICS and SICS, the radiation monitoring system also interfaces with PS, PAS, SAS, and RCSL.

The power supply for the radiation detectors and transducers is provided by the UPS. Pumps and heating systems used for the radiation monitoring system are supplied by the emergency power system.

7.2.7.3 Post-Accident Monitoring System

The Post-Accident Monitoring System (PAMS) provides information on the main safety-related parameters of the plant before, during, and after an accident. This information is required to initiate and regulate the actions required to bring the plant from the controlled state to the safe shutdown state and maintain safe shutdown thereafter.

Post-accident monitoring information is considered quality-related unless the information is required by the PS, in which case the information is upgraded to Class 1E. All of the information given to the operator is available through the PICS. However, in order to cope with the loss of PICS, all of the quality-related information is duplicated and provided to the SICS as well.

The information signals are carried between Level 2 I&C systems (PICS/SICS) and the Level 0 equipment (sensors and actuators) through the following Level 1 systems:

- PS
- SAS
- PAS
- RCSL

As a general rule, quality-related information is processed through SAS or RCSL (quality related class) and in some cases, through the PS (Class 1E).

The following are examples of information signals provided by the PAMS:

- Reactor trip signal
- "Loss of PICS" signal
- Reactor water level
- PZR level
- Hot leg temperature
- Cold leg temperature
- Containment pressure
- Position of containment isolation valves
- Boron concentration
- SFP temperature
- EFWS tank level
- SG pressure
- SG level

7.2.7.4 In-Core Instrumentation

The fixed in-core instrumentation measures the radial and axial neutron flux distribution in the core and the radial temperature distribution at the core outlet. The neutron flux signals are used for the following functions:

- Control of axial power distribution
- Core surveillance for maintaining LCO
- Core protection

The core-outlet thermocouples continuously measure the fuel element outlet temperatures, provide signals for core monitoring after a LOCA (as part of the PAMS instrumentation), and provide additional information on radial power distribution and local thermal-hydraulic conditions.

7.2.7.5 Ex-Core Instrumentation

The ex-core neutron detectors are installed outside the RPV and provide signals for:

- Monitoring the core criticality
- Initiating protective functions
- Feeding signals to PAMS
- Monitoring reactor vessel vibration

7.2.7.6 Flux Mapping Instrumentation

The flux mapping instrumentation is an aeroball measuring system. Relative local neutron flux density is periodically measured by introducing stacks of balls made of vanadium-alloyed steel (aeroballs) into the core. The measured flux density provides a means for:

- Calibrating the fixed neutron in-core and ex-core detectors
- Verifying fuel loading conformity and effect of burnup
- Detecting anomalies

7.2.7.7 Reactor Pressure Vessel Level Instrumentation

The RPV water level measurement provides continuous information of the RPV water inventory in all plant operating conditions up to core melting. The RPV water level information is a PAMS parameter of first importance and can be used in post-accident management.

7.2.7.8 Rod Position Measurement

The rod position measurement instrumentation provides information on the current position of all reactor control rods. Control rod position measurements are provided in all plant modes of operation and are required for:

- Surveillance of representative core parameters
- Closed loop control
- LCO surveillance
- Limitation functions

Rod position measurement instrumentation consists of one measurement circuit for each RCCA. Each measurement circuit is made up of the following components:

- Sensor
- Power supply module
- Processing module
- Cables

Rod position measurements are classified as Class 1E. These measurements are utilized as inputs to the PS and to the RCSL enabling those systems to perform their safety-related functions.

The 89 RCCAs are divided into four banks spanning the reactor core. Banks 1, 2, and 3 contain 22 assemblies each, while bank 4 contains 23, and includes the center assembly. The position measurements

from each bank are routed to the corresponding Safeguard Buildings 1, 2, 3, and 4. This system of division constitutes the basis of the four-fold redundancy classification of the rod position measurement instrumentation.

The rod position measurement sensors are located inside the Reactor Building above the reactor vessel head and are designed to withstand the environment at that location. Each sensor consists of a primary coil and a secondary coil that collectively form a transformer. The magnetic coupling between the two coils varies with the position of the rod. A known voltage is applied across the primary coil and the measured voltage across the secondary coil varies with the magnetic coupling. The secondary voltage measurement is representative of the control rod position.

Cables for the instrumentation are routed to the instrumentation cabinets in the Safeguard Buildings, allowing the rod measurement instrumentation to interface directly with the PS. In the instrumentation cabinets, the measurement signals are conditioned, doubled, and decoupled to be provided as inputs to both redundant RCSL subsystems.

Rod position instrumentation is subjected to periodic tests performed on each measurement circuit to verify a sufficient number of positions (low, high, and intermediate).

7.2.7.9 Loose Parts and Vibration Monitoring

The loose parts and vibration monitoring instrumentation consists of accelerometers, sensors, transducers, and processing for:

- Detecting loose parts located in places where their effect may result in severe damage with serious consequences on the availability or the safety of the plant.
- Monitoring vibrations of the RCS, RPV, internals, and RCPs for early detection of abnormal behavior of large components.

7.2.7.10 Seismic Instrumentation

The seismic instrumentation consists of eight triaxial accelerometers and associated processing equipment. These instruments measure and process the accelerations generated by an earthquake. The data are used to evaluate the seismic level and make the appropriate decisions depending upon whether or not the earthquake exceeds a predetermined level. Recording capabilities are provided.

7.2.7.11 Hydrogen Detection System

Hydrogen may be produced as a consequence of an accident. The hydrogen detection system assesses the efficiency of the Combustible Gas Control System (hydrogen recombiners).

7.2.7.12 Advanced Boron Instrumentation

This instrumentation provides measurements that are used to monitor the boric acid concentration and detect an inadvertent supply of diluted water to the RCS.

Table 7-1
Protection System Signals and Resulting Actions

Signal	Type of Resulting Action
High Linear Power Density Trip	RT
Low DNBR Trip	RT
Excore High Neutron Flux Rate of Change	RT
High Core Power Level	RT
Low Reactor Pumps Speed	RT
Low Reactor Coolant Flow Rate	RT
High Neutron Flux (Intermediate Range)	RT
Low Doubling Time (Intermediate Range)	RT
High Neutron Flux (Source Range)	RT
PZR Pressure Low 2	RT
PZR Pressure High	RT
PZR Level High 1	RT
Hot Leg Pressure Low	RT
SG Pressure Drop	RT
SG Pressure Low 1	RT
SG Pressure High	RT
SG Level (NR) Low	RT
SG Level (NR) High 1	RT
Containment Pressure High 1	RT
EFWS Actuation on Low SG Level	ESF
EFWS Actuation on Loop Signal and SIS Signal	ESF
EFWS Pump Overflow Protection	ESF
EFWS Isolation on SG Level	ESF
MSRT Opening on SG Pressure High	ESF
MSRT Isolation on SG Pressure Low 3	ESF
MSRT Setpoint Increase on SG Level (NR) High 2 If Partial Cooldown Finished	ESF
MSIV Closure on SG Pressure Drop	ESF
MSIV Closure on SG Level (NR) High 2 If Partial Cooldown Finished	ESF
MFW Full Load Closure on Reactor Trip (Check Back)	ESF
MFW/SSS Isolation on SG Pressure Drop	ESF
MFW/SSS Isolation on SG Pressure Low 2	ESF
MFW/SSS Isolation on SG (NR) Level High 1	ESF
Containment Isolation Stage 1 on Containment Pressure High 1 or SIS	ESF
Containment Isolation Stage 2 on Containment Pressure High 2 or SIS	ESF
Diesel Actuation on 4KV Bus Voltage Low	ESF
PSV Open For Brittle Fracture Protection of RPV	ESF

Table 7-1
Protection System Signals and Resulting Actions
(continued)

Signal	Type of Resulting Action
ATWS Signal	ESF
Shutdown of CVCS Charging Line On High PZR Level	ESF
Shutdown of CVCS Charging Line On SG (NR) Level High 2 If Partial Cooldown Finished	ESF
EBS Actuation on SG Pressure Low 4	ESF
EBS Actuation on ATWS Signal	ESF
Isolation of CVCS Demin Water and Startup of Boric Acid Pumps on ATWS Signal	ESF
RCP Trip on ATWS Signal and SG (WR) Level Low 2	ESF
HVAC on Containment Pressure High	ESF
Turbine Trip on Reactor Trip (Check Back)	TT
SIS Actuation on PZR Pressure Low 3	ESF
SIS Actuation on Differential Pressure Sat Low 1	ESF
SIS Actuation on RCS Loop Level Low	ESF
RCP Trip on DP Over RCP Low and SIS Signal	ESF
LHSI /RHR Train Isolation on High Sump Level and/or High Safeguard Building Pressure	ESF
Partial Cooldown Actuation on SIS Signal	ESF
Partial Cooldown Actuation on SG Level (NR) High 2	ESF
Partial Cooldown Closed Loop Control	ESF

Key To Abbreviations:

ESF = Engineered Safety Feature Actuation
MFW= Main Feedwater
NR = Narrow Range
PSV = Pressurizer Safety Valve
PZR = Pressurizer
RT = Reactor Trip
TT = Turbine Trip
WR = Wide Range

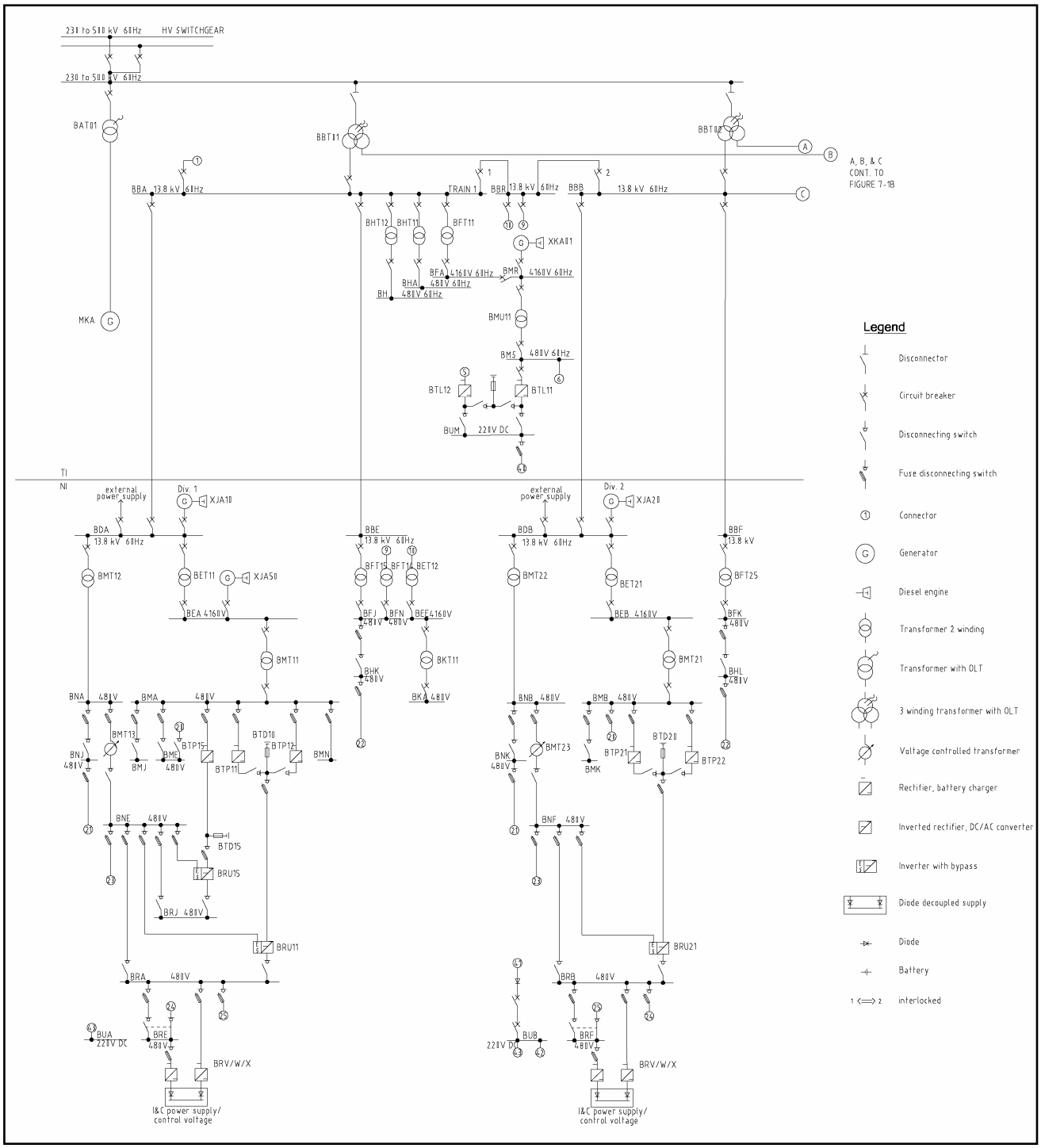

Figure 7-1A
Electrical Single Line Diagram

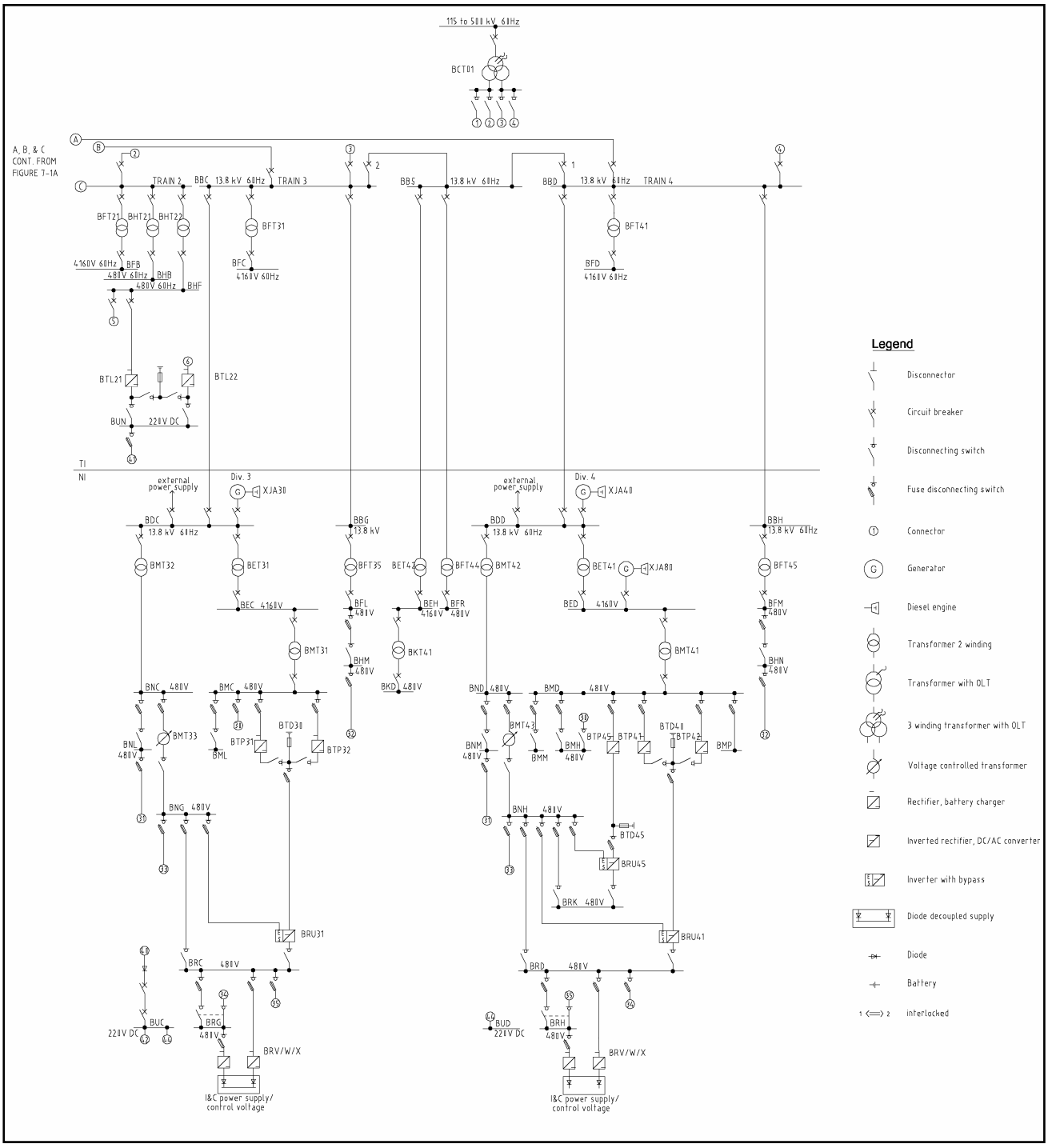

Figure 7-1B
Electrical Single Line Diagram (continued)

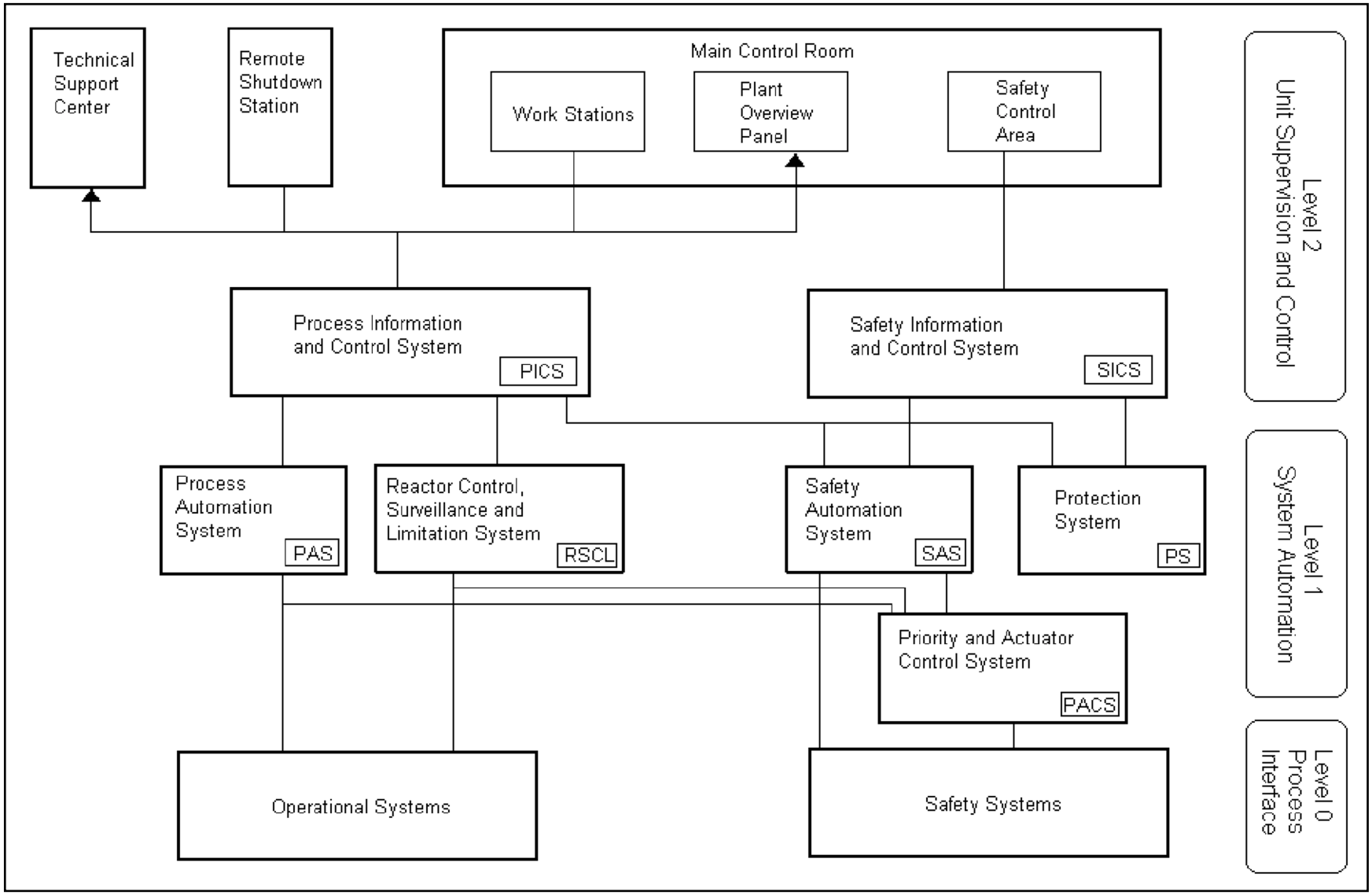

Figure 7-2
Overall I&C Architecture

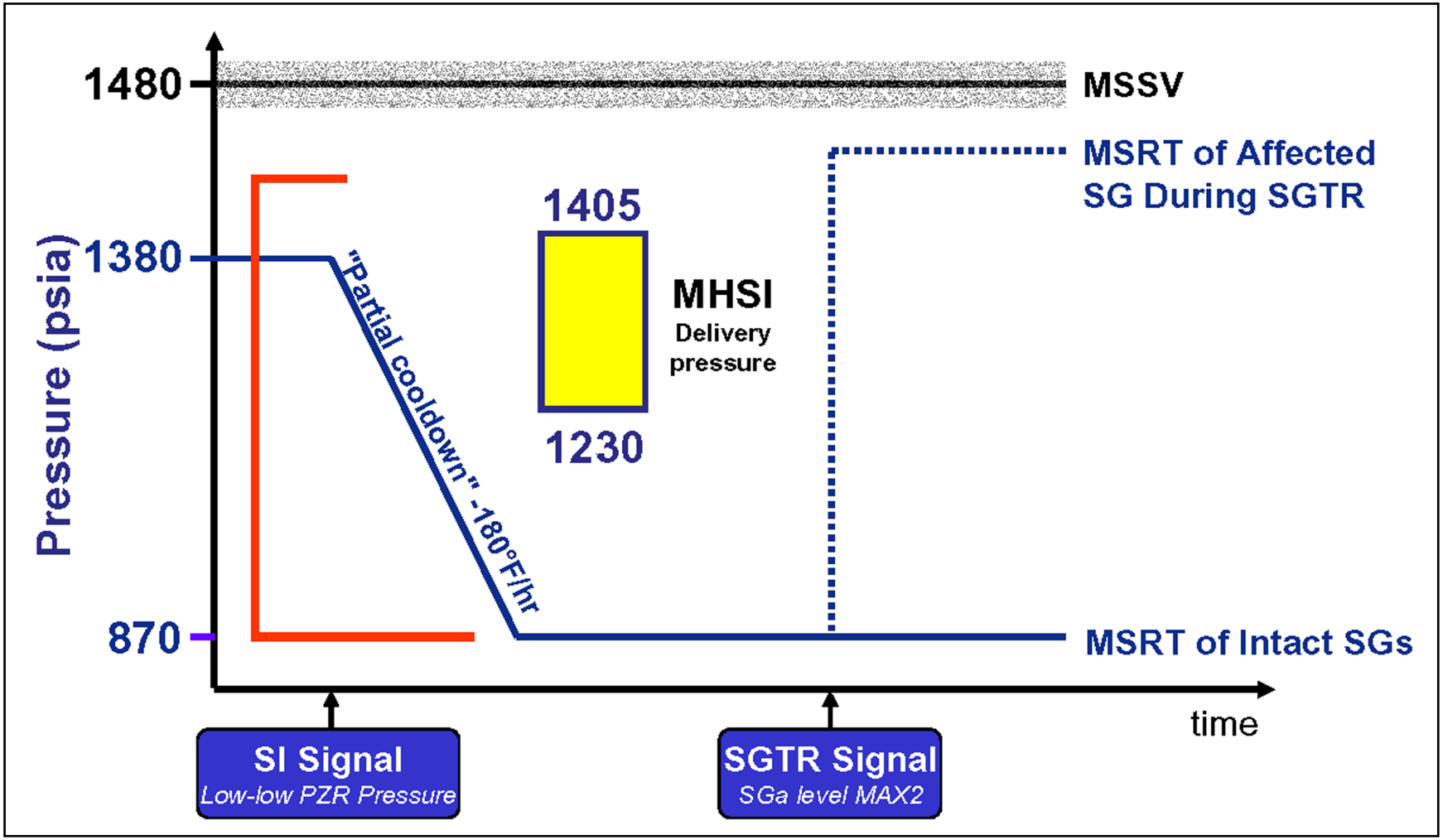

Figure 7-3
Partial Cooldown to Mitigate SGTR and SBLOCA

8.0 AUXILIARY SYSTEMS

8.1 Fire Protection Systems

The EPR fire protection design basis is focused to protect the safety of the public, the environment, and plant personnel from a plant fire and its potential effect on safe reactor operations. The fire protection design basis is based on the concept of defense-in-depth. Relative to fire protection, defense-in-depth is achieved when an adequate balance of each of the following elements is provided:

- Fire prevention
- Rapidly detecting fires that do occur
- Promptly controlling and extinguishing fires that do occur, thereby limiting fire damage
- Providing an additional level of protection for structures, systems, and components important to safety, so that a fire that is not promptly extinguished will not prevent essential plant safety functions from being performed

The fire protection features of the EPR are capable of providing reasonable assurance that, in the event of a fire, the plant will not be subjected to an unrecoverable incident. Two separate safe shutdown systems provide ongoing fire protection capabilities to meet the following performance criteria in the event that one train has been become inoperable:

1. Reactivity Control -- Reactivity control shall be capable of inserting negative reactivity to achieve and maintain sub-critical conditions. Negative reactivity insertion shall occur rapidly enough such that fuel design limits are not exceeded.

2. Inventory and Pressure Control -- With fuel in the reactor vessel, head on and tensioned, inventory and pressure control shall be capable of controlling the coolant level such that subcooling is maintained.

3. Decay-Heat Removal -- Decay-heat removal shall be capable of removing sufficient heat from the reactor core or spent fuel to maintain a safe and stable condition.

4. Vital Auxiliaries -- Vital auxiliaries shall be capable of providing the necessary auxiliary support equipment and systems to assure that systems are capable of performing their required nuclear safety function.

5. Process Monitoring -- Process monitoring shall be capable of providing the necessary indication to assure these criteria have been achieved and are being maintained.

Additionally, the fire protection system design basis ensures that radiation release to any unrestricted area due to the direct effects of fire suppression activities (but not involving fuel damage) shall be As Low As Reasonably Achievable (ALARA) and shall not exceed applicable regulatory limits.

8.1.1 Fire Area Functions and Definition

Individual fire areas are established to confine fires to their area of origin and prevent fires from spreading to adjacent fire areas. Structural barriers, consisting of walls, doors, windows, floors, ceilings, and ventilation dampers, are used to separate redundant trains of safety systems and provide safe egress (Life Safety) of plant personnel.

8.1.2 Fire Area Boundaries

Fire area boundaries are established to separate redundant safety systems and to protect the means of egress for plant personnel. Each major building within the power block is separated from the others by barriers having a designated fire resistance, by open space of at least 50 ft, or space that meets code requirements. Alternatively, a performance-based analysis may be applied to determine the adequacy of building separation.

Interior finish, wall, ceiling, structural components, thermal insulation, radiation shielding, and soundproofing materials used are noncombustible. Metal deck roof construction is noncombustible.

8.1.3 Fire Barrier Openings and Penetration Seals

Openings through fire barriers for pipe conduit and cable trays are sealed with noncombustible materials to provide a fire resistance rating equal to that required by the barrier itself, and qualified in accordance with regulatory criteria.

Penetrations in fire barriers are provided with listed fire-rated door assemblies or listed rated fire dampers having a fire resistance rating consistent with the designated fire resistance rating of the barrier.

8.1.4 Life Safety Evaluation

The goals of the EPR Life Safety Analysis are to demonstrate the protection and safe egress of occupants not intimate with the initial fire development and to provide a high level of assurance for the survivability of occupants intimate with the initial fire development.

8.1.5 Fire Detection and Alarm System

Fire Detection Systems are provided for all areas that present a credible fire exposure or contain safety-related equipment.

Fire detectors are selected and installed in accordance with U.S. standards. Preoperational and periodic testing of pulsed line-type heat detectors is performed to demonstrate that the detector transmit frequencies used will not affect the actuation of protective relays in other plant systems. The detectors give audible and visual alarm and annunciation in the control room. Where zoned detection systems are used in a given fire area, local solutions are provided to identify the detector zone that has actuated. Local audible alarms sound in the fire area and are distinctively unique so they will not be confused with any other plant system audible alarms.

Primary and secondary power supplies are provided for the detectors and for electrically operated control valves for automatic suppression systems.

8.1.6 Fire Water System

An underground firewater loop is provided around the EPR site to furnish anticipated water requirements. The loop is connected to a reliable fire protection water distribution system. The underground yard loop distributes fire water to the site hydrants and other water-based fire protection systems.

The fire protection water supply is of adequate reliability, quantity, and duration. These requirements will be satisfied by one of the two following methods:

- A fire protection water supply consisting of not less than two separate 300,000 gallon supplies, or
- A fire protection water supply providing a minimum flow rate for 2 hours, based on 500 gpm for manual hose streams plus the largest design demand of any sprinkler or fixed water spray system(s) in the power block. The fire water supply is capable of delivering this design demand with the hydraulically least demanding portion of the fire main loop out of service.

The separate 300,000 gallon water tanks are interconnected so that fire pumps can take suction from either or both. A failure in one tank or its piping will not allow both tanks to drain.

Alternatively, a water storage tank may not be required if the fire pumps are able to take suction from a large body of water (such as a lake), provided each fire pump has its own suction and both suctions and pumps are adequately separated. (A cooling tower basin could also be an acceptable water source for fire pumps when the volume is sufficient for both purposes and water quality is consistent with the demands of the fire service.)

The fire water system incorporates two redundant 100-percent capacity fire pumps (one diesel and one electric). A motor-driven jockey pump is used to keep the fire water system full of water and pressurized, as required. Each pump and its driver and controls are separated from the remaining fire pumps by a 3-hour-rated fire wall. Fire pumps are provided to ensure that 100 percent of the required flow rate (largest system demand plus hose stream allowance) and pressure are available even when assuming failure of the largest pump or pump power source.

Individual fire pump connections to the yard fire main loop are provided and separated with sectional valves between connections. The capability to isolate portions of the yard fire main loop for maintenance or repair is also provided without simultaneously shutting off the supply to both fixed fire suppression systems and fire hose stations.

A method of automatic pressure maintenance of the fire protection water system is provided and is independent of the fire pumps. A means is provided to immediately notify the Main Control Room or an alternate location (continuously staffed) of the operation of the fire pumps.

8.1.7 Automatic Sprinkler Systems

The fire protection systems for the EPR are designed to detect, control, and/or extinguish possible fires throughout the facility. Fixed suppression systems are selected based on the type of hazard(s) in the fire area, the impact on EPR operation, and the potential for release of the suppression agent.

In fire areas where the use of a water-based suppression system is the preferred means of suppression, pre-action or wet-pipe sprinkler systems are provided (with possible exception concerning individual fire department connections for each sprinkler system). Due to the fortified and protected design of the facility, it is not practical to provide individual fire department connections for each sprinkler system. Since the sprinkler systems are supplied by the plant's highly reliable fire protection water supply, individual connections are not necessary.

Each system is equipped with a water flow alarm and all alarms from any fire suppression system will provide an audible alarm in the control room or other suitable constantly attended location.

Automatic sprinkler systems are installed at the following areas:

- Four extinguishing systems for the EDGs, which provide coverage for the service tank area, emergency diesel area, and area for oil cooler and auxiliary equipment

- Two extinguishing systems for the SBO diesel generators, which provide coverage for the service tank area, SBO diesel area, and area for oil cooler and auxiliary equipment
- Diesel Fire Pump Room

8.1.8 Automatic Water Spray Systems

Automatic water spray systems are provided to protect against specific hazards. Water spray systems are installed in the following areas:

- Main oil tank for the EDGs
- Main oil tank for the SBO diesel generators
- RCPs
- Main turbine lubrication oil tank
- Main oil pipe duct under turbine floor
- Main generator transformer
- Auxiliary power transformers
- Off-site system transformers

8.1.9 Gaseous Suppression Systems

Clean agent fire suppression systems are provided to protect some electrical and/or electronic equipment areas, such as computer rooms, motor control centers, and control rooms. Due to the nature of the layout of most computer and control rooms, this type of suppression system also provides protection in the space under the raised floor of the room.

8.1.10 Standpipe Systems

Standpipe and hose systems are provided for manual fire protection for all of the power block buildings. The standpipe systems are hydraulically designed to ensure adequate water flow rate and nozzle pressure for all hose stations which are provided on all floors in the vicinity of the stairways. This capability includes the provision of hose station pressure reducers (where necessary) for the safety of plant industrial fire brigade members and off-site fire department personnel.

8.1.11 Portable Fire Extinguishers

Portable fire extinguishers are distributed as a function of their effectiveness in fighting fires in a particular area. CO_2 extinguishers will be provided in areas that contain energized electrical equipment. With the exception of the carbon dioxide extinguishers, the portable fire extinguishers are of the multipurpose dry chemical “A-B-C” type.

8.2 Steam Generator Blowdown System

The Steam Generator Blowdown System (SGBS) maintains the necessary quality of the water/steam cycle in conjunction with the nuclear sampling system. The radioactive and chemical characteristics of secondary-side water are kept within permissible limits during all plant operating conditions. SG secondary water is removed continuously, because the secondary side may contain impurities in the form of corrosion products, condenser in-leakage, or primary-to-secondary leakage contaminants. After

treatment, the blowdown water is normally recycled to the condenser, except for exceptional cases when it is discharged to the liquid waste discharge system.

Figure 8-1 shows a flow schematic of the SGBS.

The operational functions of the SGBS are to:

- Maintain the contaminants and minerals produced by phase separation in the SGs within predetermined limits by blowing down a part of the flow
- Expand and cool the blowdown water from the SG so it can be returned to the water/steam cycle via the blowdown demineralizing system. (The resin in the demineralizers must be protected from high temperatures.)
- Ascertain the quality of SG water by continuous monitoring of the blowdown water, enabling fast detection of SG tube leaks
- Provide partial or total draining of the SG secondary side
- Provide for the bubbling of the SG secondary side using the Nuclear Island Nitrogen Distribution System to mix the sampling area to get a homogeneous sample, especially when chemical reagent is injected during cold shutdown
- Reprocess secondary side samples coming from the Nuclear Sampling System

The safety functions of the SGBS are to:

- Prevent excessive mass flow from the feedwater tank into the containment
- Ensure activity retention in the affected steam generator in case of a SGTR
- Avoid steam generator overfilling and subsequent liquid release in the event of a SGTR
- Prevent simultaneous draining of two steam generators if a steam generator blowdown line breaks inside of the containment
- Prevent draining of a SG if a SG blowdown line breaks outside of the containment
- Ensure containment isolation

During normal plant operation, 1% of total feedwater is blown down. During a special operating configuration, three SGs could be isolated so that they do not have any blowdown. Should this scenario develop, the maximum continuous blowdown flowrate of the fourth would be about 2% of the feedwater flow to the remaining SG.

Each blowdown line is fitted with:

- Two SG secondary side isolation valves that are located in the Reactor Building, and represent the first level of SG isolation. One of these valves is located on the SG common hot leg blowdown pipe and the other valve is located on the SG cold leg blowdown pipe.
- One SG secondary side isolation valve, representing the second level of SG isolation, is located in the Reactor Building.

These valves ensure activity retention in case of a SGTR; prevent a partial and simultaneous draining of two SGs; and also provide the capability to isolate three of the four SGs in order to have a higher blowdown flow rate for the fourth SG.

The high pressure portions of the SGBS, including the SGBS flash tank, are located in the Reactor Building. The arrangement also keeps the piping lengths short between the SG and the flash tank.

SG blowdown is automatically isolated in the event of a SGTR and also on the activation of emergency feedwater flow.

Each SG blowdown stream is routed to its dedicated flash valve which adjusts the blowdown flowrate and permits an expansion of the blowdown. The four flash valves are attached to the flash tank which provides liquid/gas phase separation.

The SG blowdown is cooled to maintain the required operating conditions for the demineralizers of the SG blowdown demineralizing system. A regenerative heat exchanger, located downstream of the blowdown flash tank and cooled by main condensate, cools the flashed liquid to the required temperature. The blowdown flash tank and blowdown cooler are located in the Reactor Building.

The cooled blowdown condensate is treated in the SG blowdown demineralizing system which consists of filtration, cationic bed demineralization, and mixed bed demineralization.

The radioactive and chemical characteristics of SG blowdown are monitored by the nuclear sampling system and plant radiation monitoring system. Sampling is provided at the SG outlet on the cold and hot leg blowdown lines (because the sludge concentration may be different in the hot and cold legs) upstream of the SG isolation valves. Therefore, sampling the SG secondary side and measuring its chemical and radioactive characteristics is possible even if the SGs are isolated. Secondary side samples that come from the nuclear sampling system are re-injected upstream of the SG blowdown demineralizing system.

8.3 Reactor Boron and Water Make-up System

The RBWMS supplies makeup water and boric acid to the RCS via the CVCS to control the boron concentration in the RCS during slow reactivity changes. The system performs the following functions:

- Supplies boric acid and/or deaerated and demineralized make-up water in a ratio equal to the actual concentration in the RCS system via the CVCS for control of the reactor coolant level in the PZR
- Supplies the RCS with boric acid and/or deaerated and demineralized make-up water, via the CVCS system, for control of slow reactor reactivity variations that result from plant start-ups and shutdowns, variations in the neutron-absorbing fission products in the fuel (xenon and samarium effect), and fuel burnup and burnable poison burnout
- Batch preparation of fresh 4% boric acid (7,000 ppm boron) enriched in ^{10}B
- Storage of 4% boric acid in two separate tanks
- Supplies the required amount of boric acid for filling and makeup via the Fuel Pool Purification System (FPPS) to the fuel pools and IRWST
- Supplies boric acid filling and makeup (7,000 ppm boron) to both tanks of the EBS
- As a backup to the safety-related EBS, the RBWMS can be used to add 7,000 ppm borated water to the RCS in the event of an ATWS.

The boric acid mixing tank is used to produce fresh boric acid by dissolving nuclear-grade boric acid powder in warm demineralized water to obtain a concentration of 4% H_3BO_3 enriched in ^{10}B. The boric acid feed pump is utilized for initially filling the boric acid storage tanks of the RBWMS and the tanks of the EBS with boric acid having a concentration of 4%. The 4% boric acid is diluted with demineralized

water to initially fill the SIS and accumulators, the IRWST, the RCS, and the fuel pools with diluted boric acid of 1,700 ± 100 ppm boron depending on the concentration necessary for refueling. During normal plant operation, the preparation of H_3BO_3 is only necessary to replace losses and (in rare cases), to replace depleted boric acid.

The requirements for tank inspection and the layout of the Fuel Building lead to dividing the storage capacity for boric acid into two tanks. After the initial filling has taken place, the boric acid (4%) comes from the evaporator column of the Reactor Coolant Treatment System. For operational redundancy, two boric acid pumps with downstream control valves are installed to deliver the required amount of boric acid to the CVCS. The pumps are normally lined up to one tank but are capable of pumping from either tank. The boric acid pumps and control valves are powered from the emergency buses, backed with EDG power.

Excess coolant coming from the RCS is separated into boric acid and demineralized water in the Reactor Coolant Treatment System. The demineralized water is stored in the coolant storage tanks, one of which is always connected to the suction side of the demineralized water pumps. For operational redundancy, two pumps with downstream control valves, each having a capacity of 100%, are installed to provide the appropriate amount of demineralized water to the CVCS. The demineralized water pumps and control valves are also powered from the emergency buses, backed with EDGs.

During normal system operation, both boric acid pumps are lined up to their respective storage tank and both demineralized water pumps are lined up to the Coolant Storage and Supply System. One boric acid pump and one demineralized water pump is designated as the primary pump. The Reactor Control and Surveillance Limitations (RCSL) system provides a signal to automatically start and stop the primary pump in each train. When the level in the VCT decreases to a low limit, automatic make-up is initiated and water at the proper concentration is added to the CVCS. When the VCT level reaches its high limit the system is automatically shutdown.

The major components which contain boric acid are located within the Fuel Building and the demineralized water components are located within the Nuclear Auxiliary Building.

Figure 8-2 shows a simplified flow diagram of the RBWMS.

8.4 Gaseous Waste Processing System

Radioactive fission gases, among them xenon and krypton, are generated in the reactor core. A portion of these gases is released to the reactor coolant if fuel cladding defects occur. Additionally, hydrogen is added to the reactor coolant by the CVCS for the purpose of oxygen control. Since the gases are dissolved in the reactor coolant, they are transported to various systems in the plant as a result of process fluid interchange. Because of the explosive nature of hydrogen in a mixture with oxygen, the amount of these gases in components of the auxiliary systems is controlled.

The GWPS performs the following tasks:

- Compensates for the level deviations of the free gas atmosphere in the connected tanks by injecting or accommodating the corresponding gas volume
- Prevents the escape of radioactive gases from the connected components into the building air by maintaining a negative system pressure
- Flushes components in which coolant degasification occurs with nitrogen in order to process the waste gases

- Limits the hydrogen content in the system and in the flushed components to less than 4% by volume and the oxygen content to less than 0.1% by volume in order to prevent the formation of a combustible mixture. (This also prevents absorption of oxygen by the reactor coolant, thereby preventing corrosion in the RCS).
- Handles the excess gas flow rates arising from the several systems connected to the GWPS during start-up and shutdown of the plant
- Permits decay of the noble gases to an acceptable radiation level prior to their release to the environment

The following safety functions are performed by the GWPS:

- Containment isolation
- Activity retention and contribution to limiting releases to the environment. The GWPS limits the hydrogen concentration in the connected systems in order to prevent the formation of explosive mixtures and processes radioactive gaseous wastes so as to minimize personnel exposure to radiation. Performance of these tasks will effectively control the release of radioactive gaseous wastes to the environment to limit total radiation exposure to personnel in accordance with the relevant regulations and ALARA standards.

The GWPS is designed for all normal operating conditions of the plant. The different systems connected to the GWPS consist mainly of tanks and vessels that contain a variable volume of free gas. GWPS design criteria are listed below.

- Prevent the release of radioactive gases from the connected systems and components into the atmosphere of the Radioactive Waste Building. This is ensured by exhausting gases originating in the RCS and maintaining a sub-atmospheric pressure in the flushing part of the GWPS.
- Minimize the discharge of gases to the environment by using a closed loop GWPS in which the flushing gas nitrogen is reused after reduction of the H_2 and O_2 content.
- Contain the radioactive gases (xenon, krypton) for a sufficient decay time and release to the Nuclear Auxiliary Building ventilation system.
- Handle the flushing gas flow from the RCS in case of nitrogen flushing in mid-loop operation.
- Maintain a positive pressure in the delay beds to optimize the gas storage capability of the delay line.
- Use activated charcoal for delaying the noble gases to reduce the necessary component volume of the delay line.
- Limit the oxygen concentration in the GWPS to < 0.1% by volume in order to prevent absorption of oxygen by the reactor coolant which could cause corrosion in the RCS.
- Limit the hydrogen concentration in the GWPS to < 4% by volume in order to prevent the formation of an explosive gas mixture with oxygen (the limits of flammability of such a mixture are 4% H_2 by volume and 5% O_2 by volume).
- Reduce the hydrogen and oxygen concentration in the flushing gas. For this purpose, a catalytic recombiner is installed in the GWPS.

Components connected to the GWPS are flushed with sufficient quantities of nitrogen to limit the hydrogen concentration below the lower flammability limit of 4% by volume. The flow rate design criteria of the waste gas compressor and of the several flushing lines are based on the maximum hydrogen amount arising from the flushed tanks and vessels as well as the maximum flow rate during the surge gas operation mode. Parallel operation of both waste gas compressors is possible.

The recombiner is designed to handle the full flushing gas flow at a maximum concentration of 4 vol. % hydrogen and 2 vol. % oxygen. The required volume of catalyst depends on the type of catalyst and the maximum gas flow rate.

Although the reaction starts at ambient temperature, the catalyst is heated to about 200°F by the installed heating elements to guarantee efficient operation. This prevents moisture from precipitating onto the catalyst material, which might impair the reaction capability of the recombiner.

The noble gases xenon and krypton are retained in the delay line by adsorption until radioactivity has decayed to a level permissible for release to the vent stack.

The single failure criterion is applied for functions concerning containment isolation.

All electrical loads of the GWPS are connected to the emergency power supply.

8.5 Liquid Waste Processing System

During operation of the nuclear power plant, waste water and liquid wastes are produced by system drains, leakage, flushing, and other processes. The EPR has a liquid radioactive waste processing and storage system that performs the collection, short-term storage, processing, and cleaning of the waste streams produced by letdown, drainage, purge, venting, or leakage from systems in the controlled area.

The Liquid Waste Processing System is designed to perform the following tasks:

- Activity retention and limiting releases to the environment
- Selectively collect and segregate liquid effluents produced by the RCS, reactor auxiliary systems, reactor cavity and SFP, as well as all potentially contaminated liquids produced in the plant such as floor drains, laundry, and decontamination wastes
- Route the collected waste to the storage and processing facilities
- Manage, under administrative and automatic controls, the waste water fed to the wastewater collecting tanks according to the collection, treatment, and discharge capacity of the Liquid Waste Processing System.

Total storage capacity for the system corresponds to the average quantity of effluents produced on a weekly basis.

Oil removal equipment is provided in radioactive liquid waste systems (sumps) prior to subsequent treatment.

The system provides for analysis of the contents of each storage tank and subsequent treatment so that the quality of the treated liquid is acceptable and can be discharged to the environment.

Prior to discharging the processed wastewater to the environment, the following tasks are performed by the system:

- Measuring the volumes of the liquid effluents to be released
- Measuring the activity of the liquid effluents to be released
- Determining and recording release rates

The processed wastewater is monitored during discharge. The discharge line is automatically isolated if an authorized limit is exceeded.

Processed water discharged to the environment via the Liquid Waste Processing/Storage System will comply with applicable regulations. The liquid waste water can be pumped from the monitoring tank only if the concentration of radionuclides in the monitoring tank is in accordance with applicable discharge regulations.

In the event of damage to a collection tank or a storage tank, the damage or failure would not lead to a radioactive discharge from the plant due to the following design considerations:

- The room where the tanks are installed can retain the entire volume of the tank.
- The capacity of the other tanks in the system will accommodate the volume of a damaged tank.

In the event of leakage from pipes, the drains collect such leakage and convey it to the sump where the sump pumps are designed to route the leakage into one of the collection tanks.

The Liquid Waste Processing System plant discharge valve is supplied with emergency power.

The single failure criterion is not applicable to the Liquid Waste Processing System.

8.6 Nuclear Sampling and Hydrogen Monitoring System

The nuclear sampling and hydrogen monitoring system provides centralized and local facilities for obtaining liquid and gaseous samples from the primary and secondary circuits, liquid and gaseous waste treatment systems, and from auxiliary systems, to determine the characteristics of these fluids by subsequent measurements and analyses. In addition, the hydrogen monitoring function measures hydrogen gas concentrations in the containment after an accident.

The operational functions of the nuclear sampling and hydrogen monitoring system are to collect liquid and gas samples for analysis, monitoring, and surveillance of the following systems:

- RCS
- RHRS
- CVCS
- Coolant purification system
- Spent fuel pool cooling and purification system
- SIS (including IRWST)
- SGBS
- Boron recycle evaporator
- Reactor coolant gas stripper
- Reactor coolant storage system
- Boric acid storage system
- GWPS

The primary elements and parameters that are monitored by this system are:

- Boron
- Oxygen
- Hydrogen
- pH
- Specific conductivity
- Cation conductivity
- Sodium
- Lithium
- Noble gas activity concentration of the reactor coolant

After an accident, the nuclear sampling system provides the following information:

- Boron concentration of the reactor coolant and reactor coolant activity (gamma wide range)
- Secondary side activity in case of a SGTR to support the detection of the affected SG

Samples of the primary coolant can be taken via the sample points located downstream of the LHSI pumps. Gaseous samples of the containment atmosphere are provided by the system to determine the nuclide specific activity concentration. A sample of the IRWST water can be taken by means of the SAHRS.

The following safety functions needed to contain radioactive substances are performed by the Nuclear Sampling and Hydrogen Monitoring System:

- RCPB isolation
- Containment isolation
- Provide post-accident information on reactor coolant boron concentration and activity level
- Provide post-accident information on secondary side activity
- Post-accident sampling of containment atmosphere
- Post-accident measurement of hydrogen concentration of containment atmosphere

System samples are categorized as radioactive liquid samples, slightly active liquid samples, secondary (normally inactive) samples, and gaseous samples. The samples which fall into these different categories and their collection/sampling point(s) are listed below.

Radioactive Liquid Samples

- Liquid samples are drawn from the reactor coolant (including a post-accident situation) at the primary loops, PZR, RHRS, and CVCS (upstream and downstream of the purification unit).
- Liquid samples are taken from the boron recycle system, more precisely from the storage tanks, downstream of the mixed bed filter, and downstream of the boric acid metering pumps.
- Liquid samples are taken from the four trains of LHSI.

Slightly Active Liquid Samples

- Liquid samples are collected from the SIS, in particular from the accumulators.
- Liquid samples are taken from the boron recycle system and the boron makeup system, specifically from the distillates downstream of the after cooler; downstream of the degasified column of the coolant degasification system; and from the boric acid storage tanks.
- Liquid samples are drawn from the Fuel Pool Cooling and Purification System, specifically from downstream of the heat exchangers, and from the Reactor Building and Fuel Building pool purification loops.

Secondary Samples

- Liquid samples are collected from each SG at three different locations: the SG itself near the feedwater nozzle level, and the hot and the cold legs of the SG blowdown system.
- Liquid samples are taken from the SG blowdown system, downstream of each demineralizer and filter.

Gaseous Samples

Movable connections allow the sampling of the gaseous phase of a coolant storage tank and the sampling of the GWPS upstream of the gas dryer; upstream of the recombiners; and upstream and downstream of the delay beds. Gaseous samples can also be taken locally from the vent and drain tanks.

8.6.1 Post-Accident Sampling System

In the event of an accident, the atmosphere of the containment may include radiolysis products (hydrogen and oxygen), steam, particulates, and radioactive fission products (noble gases, radioactive aerosols, and iodine). The number and amount of isotopes as well as the gas composition in the atmosphere following an accident can provide an indication of the temperature history of the core during the accident and thereby provide information on the physical state of the core. Early information concerning the extent of the damage and the conditions prevailing in the containment after an accident is important for accident management measures.

The Post-Accident Sampling System is designed to provide gas and liquid samples of the containment atmosphere following an accident. When a sample is taken from the containment atmosphere, aerosols and iodine are retained in the scrubbing liquid of the pool sampler with a retention efficiency of about 99%.

The scrubbed gas, which contains mainly noble gases, is transported to the gas sampling module for dilution of the sample with nitrogen. After sampling of the noble gases, a sample of the scrubbing liquid is removed from the pool sampler. This liquid, containing aerosols and iodine, is transported by means of pressure pulses through the sample pipes to the scrubbing liquid sampling module for diluting with demineralized water. After dilution, both the gas and the liquid samples are transported to the sampling box where a sample can be taken with a syringe.

All modules, the sampling box, and the local control cabinet are located in the Nuclear Auxiliary Building. To ensure protection of the operating staff while taking a sample in the sampling box, all modules and pipes which convey highly contaminated fluids and gases are located behind a biological shield.

8.6.2 Hydrogen Monitoring System

The H_2 concentration or gas composition in the containment atmosphere arising from LOCAs or severe accidents is measured at representative points inside the containment. Measurements are displayed and recorded in the Main Control Room. The system is used to assess the hydrogen release and distribution inside containment and the efficiency of the hydrogen reduction system. The data provided by the system are used for accident management measures.

Thirteen measurement points are arranged in the containment for the measurements during accident conditions. The locations of the measuring points are based on the gas distribution during design basis accidents and severe accidents and are tentatively located in the lower and upper SG compartments, the PZR compartment, the PZR valve room, the containment dome, and the IRWST. Due to the different measurement and qualification requirements in severe and design basis accident scenarios, different measurement points may be selected. The actual number of measurement points and the specific measurement technologies required will be determined after the accident analyses have been performed.

The nuclear sampling system has redundant sampling points and containment penetrations. The post-accident sampling system and the hydrogen monitoring system are supplied with emergency power.

8.7 Heating, Ventilation and Air Conditioning Systems

The HVAC systems function to contain radioactive substances and reduce radioactive releases to the environment for normal operating modes and transients, as well as abnormal events. The HVAC consists of 2 x 50% iodine filtration and 4 x 50% air conditioning systems, physically separated.

As supporting systems, the HVAC and Chilled Water Systems maintain ambient conditions for equipment and personnel within acceptable limits (temperature and fresh air flow rate) to ensure the correct operation of safety-related systems and habitability in the Main Control Room.

The HVAC and Chilled Water Systems are classified into the following four categories.

1. Systems that participate in the reduction of radioactive releases.
   - AVS -- used during normal operation and accident conditions. The annulus is maintained at sub-atmospheric pressure to collect any leakage through the inner containment. The leakage is filtered, then vented to the stack.
   - Nuclear Auxiliary Building and Fuel Building Ventilation System -- used only for normal operational service.
   - Containment Purge System -- used only for normal operational service. A part of the exhaust duct and containment penetration is used in combination with the Safeguard Buildings controlled area ventilation system for fuel handling accidents.
   - Safeguard Buildings Controlled Area Ventilation System -- used during normal operation and during plant accident conditions.
   - Radioactive Waste Building Ventilation System -- used only for normal operational service.
   - Access Building Ventilation System -- used only for normal operational service.
2. Systems which maintain the ambient conditions necessary for safety-related systems and components.
   - Reactor Building Ventilation System -- used for normal operational service.

- Main Control Room Air Conditioning System -- used during normal operation and during plant accident conditions.
- Electrical Unit of the Safeguard Building Ventilation System -- used during normal operation and during plant abnormal conditions.
- Diesel Building Ventilation System -- used during normal operation and during plant accident conditions.
- Service Water Pump Building Ventilation System -- used during normal operation and during plant abnormal conditions.

3. Chilled water systems to support the safety-related ventilation systems.

   - Safety Chilled Water System -- used during normal operation and during plant accident conditions.

4. Balance of Plant HVAC and Chilled Water System for operational service.

   - Ventilation/Air Conditioning System for Switchgear Building
   - Ventilation System for Turbine Building
   - Ventilation System for Circulating Water Pump Building
   - Space Heating System
   - Chilled Water System for Balance of Plant
   - Air Humidifying System
   - Ventilation System for Auxiliary SG Building
   - Circulating Water Seal Pit Building Ventilation System

Systems that contribute to the reduction of radioactive releases filter the exhaust flow using HEPA filters and iodine filters (or recirculation in the containment cooling ventilation system) and release the gaseous waste to the stack.

Systems that maintain the ambient conditions necessary for the safety-related components also maintain ambient conditions within acceptable limits (temperature, humidity, fresh air flow rate, radioactive contamination, and cleanliness) for equipment and personnel access and habitability in the Main Control Room.

Chilled Water Systems to support the safety-related ventilation systems maintain chilled water circulation in the ventilation coils.

Ventilation and filtering systems that reduce the concentration of radioactive substances in the plant atmosphere (thus preventing the spreading of radioactive substances to other plant quarters) or restrict the environmental releases of radioactive substances, are capable of operating at their design conditions in the event of a single failure during normal operational conditions and design basis and accident conditions.

The inlet air filtering system of the Main Control Room and the rooms required for the conduct of operations during accidents is capable of accomplishing its safety function even in the event of a single failure during operational conditions and accidents.

For safety-related systems that reduce the concentration of radioactive substances in the plant atmosphere and restrict environmental releases of radioactive substances during normal plant operation, the fans are

redundant and not supplied by emergency power. The filters are non-redundant because only slow failure modes are assumed (filtration efficiency is checked periodically).

For safety-related systems that reduce the concentration of radioactive substances in the plant atmosphere and restrict environmental releases of radioactive substances during abnormal plant operation, the fans and filters are redundant. The fans are supplied by emergency power sources, if needed.

For filtering of air intake for the Main Control Room, the fans and filters are redundant. Fans do not have an emergency power supply.

Ventilation systems that ensure ambient conditions for safety systems fulfill the same redundancy requirements as the safety systems they support.

The intake air centers and intake air systems of buildings containing systems important to safety are designed and located so that the spreading of smoke is unlikely.

The intake air of the Main Control Room is filtered for poisonous and contaminated gases and aerosols. The intake air center of the Main Control Room is equipped with a device that can be closed if poisonous or contaminated outside atmospheres are detected.

Emergency power supplies are provided to those systems that are involved in reducing radioactive releases; are used during accidents; maintain the ambient conditions during accidents (necessary for the safety-related components); and are cooling systems that support the safety-related ventilation systems.

8.8 Sampling Activity Monitoring System

The sampling activity monitoring system obtains representative airborne radioactivity samples during normal operation and accident conditions by:

- Sampling at a constant flow from the condenser evacuation system exhaust and from other compartment exhaust air ducts
- Sampling the plant stack isokinetically. The stack is the pathway for gaseous radwastes and the exhaust outlet for the ventilation systems.

The safety function performed by the sampling activity monitoring system is to obtain representative samples to determine airborne concentration activity.

The Reactor Building, Fuel Building, Nuclear Auxiliary Building, and mechanical area of the Safeguard Buildings have separate ventilation circuits ending in a common discharge stack. Samples are taken from each circuit and from the discharge stack during normal operation and accident conditions. Samples are also taken from the exhaust air ducts of the Access Building and the Radioactive Waste Building.

The air samples are passed to the sampling and measuring instruments along the shortest path and returned to the exhaust air system. The adsorption losses of gaseous iodine and radionuclides bound in aerosol particles are kept sufficiently small by using suitable routing and materials.

Two separate exhaust air sampling systems, each with two 100% rotary compressor fans and separate sampling lines are provided. These rotary compressor fans are connected to the emergency power system, but not to the SBO diesels.

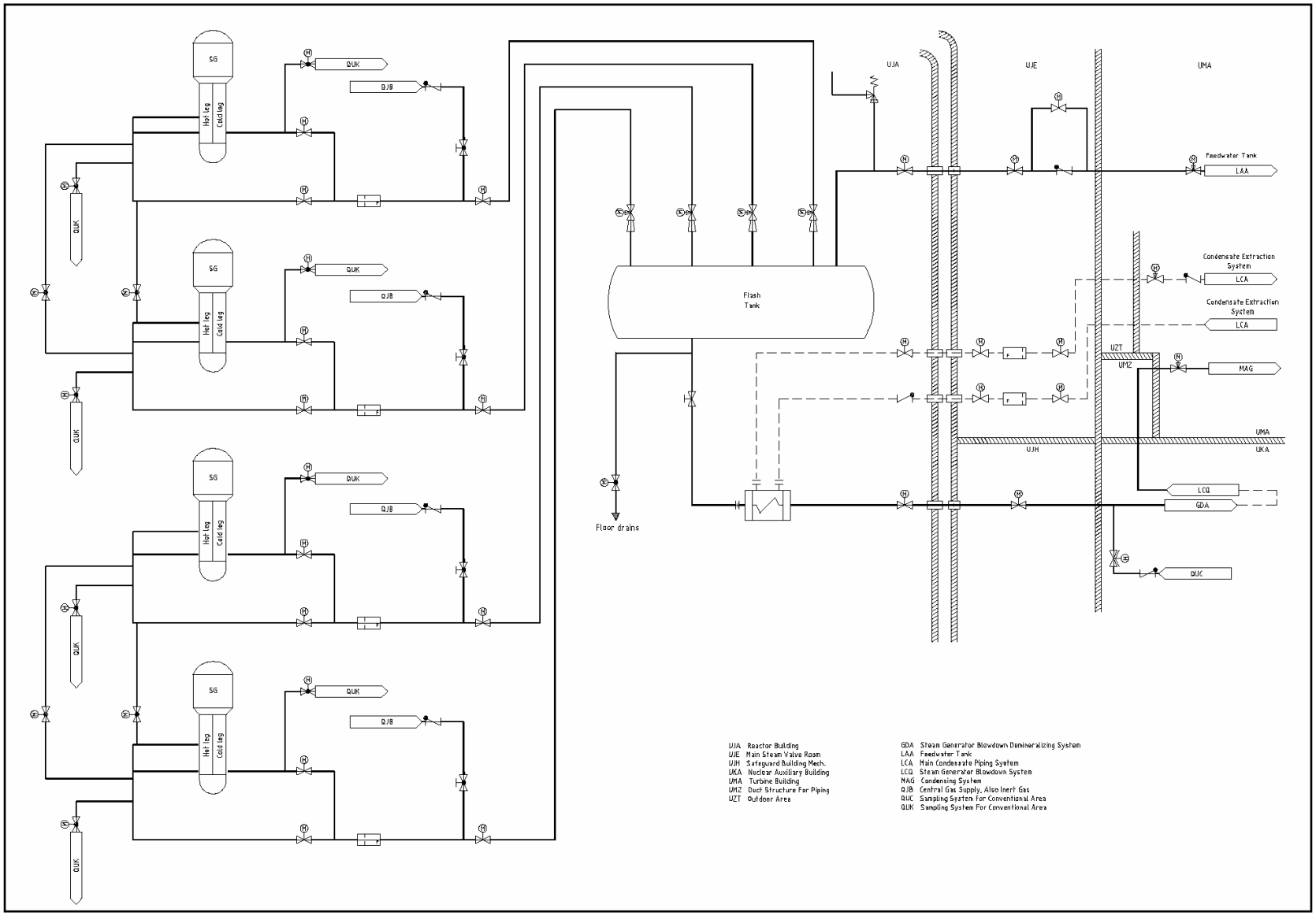

Figure 8-1
Steam Generator Blowdown System

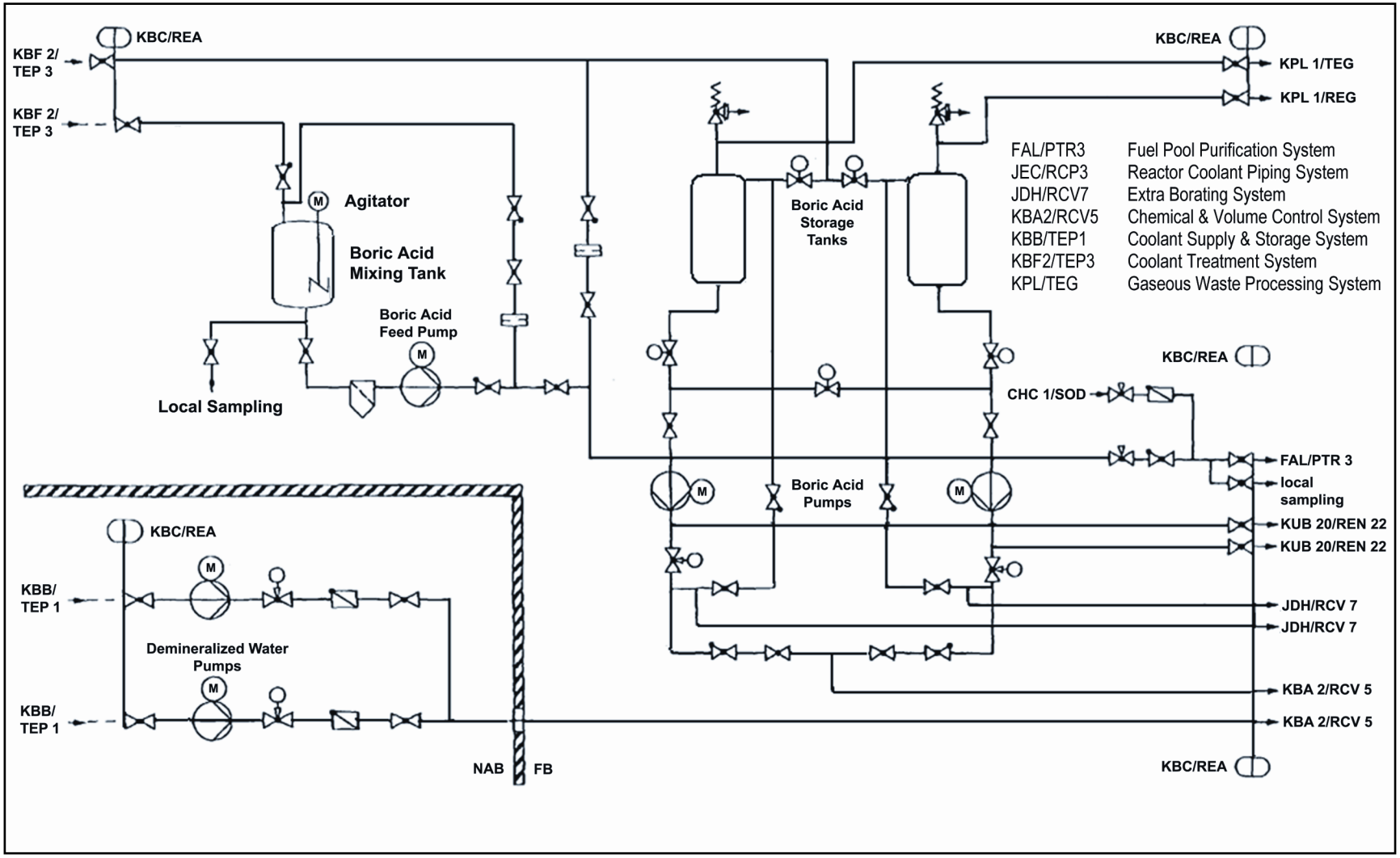

Figure 8-2
Reactor Boron and Water Make-up System

9.0 TURBINE ISLAND DESIGN

9.1 Turbine Building

The Turbine Building contains the components of the steam-condensate-feedwater-cycle, including the turbine and generator set. The building is divided into two bays: the main bay with the turbine generator set, the condensate system, and the feedwater heating system; and the service bay with the deaerator, feedwater storage tank, and the feedwater pumps.

The steam and power conversion system includes the Main Steam System (MSS), the turbine generator, the main condenser, the feedwater system, the feedwater storage tank, and other auxiliary systems.

The main condenser condenses the turbine exhaust and transfers the heat rejected in the cycle to the circulating water system. Regenerative feedwater heaters heat the condensate and the feedwater and return it to the SGs. A feedwater storage tank is integrated into this cycle to deaerate and heat the condensate. This tank also provides a buffer volume to accommodate minor system transients.

The following parts of the steam and power conversion system have safety-related functions with respect to RHR:

- EFWS
- MSS inside the Nuclear Island
- MFWS inside the Nuclear Island

The Turbine Building is independent of the Nuclear Island such that internal hazards in the Turbine Building remain confined. The building is located in a radial position with respect to the Reactor Building to provide protection from turbine missile impact.

The Switchgear Building is part of the balance of plant. It contains the power supply and the I&C, and is located next to the Turbine Building. Both of these buildings are designed not to adversely impact the Nuclear Island.

The main circulating water lines are routed in the basement of the Turbine Building. The low pressure (LP) drains cooler; the conventional closed cooling water system; and pumps that require a high suction head are located in the basement. The main condenser is positioned crosswise to the turbine axis and occupies the space below the LP turbine. The turbine oil system with main oil tank, filters, coolers, and pumps is installed in a dedicated fire zone below the turbine generator.

Two vertical moisture separator/reheaters are installed in front of the high pressure (HP) turbine and extend over several floors. Located within the main bay are LP and HP heaters, the vacuum pumps, and the generator auxiliary system. The MFW pumps are arranged at elevation ±0.00 ft in the service bay.

Additional LP and HP heaters are arranged within the main bay on an intermediate floor elevation.

The generator bus ducts are located at the intermediate level and cross above the Turbine Building entrance bay and leave the building toward the generator transformer bank.

9.2 Main Steam System

The MSS routes the steam produced in the four SGs to the HP turbine inlet valves.

Each main steam line has a MSIV located just outside the containment. A bypass line with shut-off and control valves is provided around each MSIV for warming the piping system downstream from the cold condition. After pressure balance has been achieved between the secondary side of the SGs and the main steam lines in the Turbine Building, the MSIVs are opened and the warm-up valves are closed.

Overpressure protection on each main steam line is provided by a Main Steam Relief Train (MSRT) and two MSSVs. Each MSRT consists of a Main Steam Relief Isolation Valve (MSRIV) and a downstream MSRV. The MSRIVs are fast opening valves that are normally closed. The MSRVs are normally open control valves. The MSRIVs open quickly in the event of an overpressure transient. The MSRVs allow termination of flow through a stuck open MSRIV.

In addition to steam supply to the main turbine, the MSS supplies backup auxiliary steam for miscellaneous uses such as deaerator pegging. Additionally, the MSS features a non-safety grade turbine bypass to the condenser for operational flexibility.

The safety functions of the MSS are to provide reactivity control, RHR, and containment of radioactive substances.

Figure 9-1 shows a simplified flow diagram of the MSS.

Reactivity Control

The MSS does not directly affect reactivity control, however, the safety-related portion of the MSS indirectly supports reactivity control by isolation of the steam lines in the event of excessive steam flow. An excessive increase in steam flow causes overcooling of the reactor coolant and, thus, positive reactivity feedback to the core.

In the event of a steam line break, quick closure of the steam line isolation devices enables the broken line to be isolated to limit the cooldown of the RCS and the energy release, so that the allowable limits specified for the fuel and the design conditions for the RPV and the containment are not exceeded. The isolation devices stop the steam flow (or two-phase mixture) that may flow through them in the normal flow or reverse flow direction.

Residual Heat Removal

The MSS removes residual heat by steam dump to the condenser via the turbine by-pass (if available) or to the atmosphere via the MSRT from the hot shutdown condition until RHRS entry conditions are reached.

In the event of a small or intermediate break LOCA or SGTR, the MSS cools the primary side down to the MHSI pressure by means of the MSRTs (i.e., partial cooldown) or turbine bypass (if available).

Main steam release to the atmosphere is designed so that the fuel temperature remains within specified limits and the RCPB remains within the design conditions.

Heat removal is performed even in the event of a loss of external power combined with a single failure (failure to open one MSRT).

Containment of Radioactive Substances

The MSS retains radioactivity in the event of a SGTR by isolating the SG on the steam side.

To ensure the containment of radioactive substances in the event of a SGTR, the affected SG is detected and isolated; thus, the release of reactor coolant to the atmosphere is minimized.

Operational Functions

The MSS supplies main steam to the turbine and all other main steam consumers in the turbine building during normal operation, and removes the residual heat by steam transfer to the condenser during non-power operation. The main steam is transported through four lines from the SGs via the main steam valve stations in compartments on top of the Safeguard Buildings to the main stop and control valves of the HP turbine.

From each of the SGs, the main steam flows in a main steam line out of the Reactor Building via the valve compartment, into the Turbine Building and up to the turbine valves.

A main steam valve station consists of:

- One MSIV
- Two MSSVs
- One MSRIV
- One MSRV

The MSIV is welded into a straight piping section between the containment penetration and a fixed point downstream of the penetration. The MSIV is an oil-pneumatic operated gate valve.

The MSRV is a motor-driven control valve that is welded into the discharge piping downstream of the MSRIV.

The MSRIV is a fast opening, open–shut valve that is welded to the main steam line section between containment penetration and MSIV.

The two MSSVs are spring-loaded safety valves. Each one is welded onto the main steam line section between the containment penetration and MSIV.

The warm-up line incorporates one motor-driven isolation valve and one motor-driven control valve.

Downstream of the MSIVs, pipes branch off the main steam lines to the turbine bypass station. The heating steam for the two steam reheaters is extracted between the main stop and control valves of the HP turbine.

Following expansion in the HP turbine, the steam is dried, reheated and fed to the three double-flow LP turbine cylinders. Each LP cylinder is assigned a condenser in which the steam condenses following expansion in the LP turbine. The heat of condensation is removed by the condenser circulating water system.

The HP and LP turbines comprise a permanently coupled unit with the generator. During startup or on turbine shutdown, main steam is dumped directly into the condensers via the turbine bypass.

Condensate which collects in the condenser hotwell is pumped through four stages of LP feedwater heating and delivered to the deaerator by the condensate pumps.

Feedwater is pumped from the deaerator through two stages of HP feedwater heating and delivered to the SGs by the feedwater pumps. The drains accumulating in the feedwater heaters, reheaters, moisture separators, and in drains traps downstream of the third stage of feedwater heating are cascaded back and subsequently pumped forward by a drain pump. Drains upstream of the third stage of feedwater heating cascade back to the condenser. The feedwater control valves are located in the valve compartments and are accessible at all times. A swing check valve is located inside the containment upstream of each SG.

During startup and shutdown, the SGs are supplied with feedwater by means of the SSS.

The required degree of purity of the water in the steam/water cycle is maintained by means of the SGBS. The blowdown water is cooled, cleaned, and returned to the steam/water cycle. The required makeup water for the cycle is conditioned in a demineralizing system, stored in the demineralized water storage tank, and fed as required to the cycle.

To ensure heat removal from the RCS via the SGs, three systems for supply of feedwater to the SGs are provided, namely the MFWS, the SSS, and the EFWS with the latter being a safety system.

Two additional possibilities for steam dumping are provided with either the condenser or the atmosphere acting as the heat sink. The latter path is designed on the basis of safety considerations.

Under normal operating conditions, there are no detectable radioactive contaminants present in the steam and power conversion system. The system is monitored for increases in radioactivity by means of the main steam line monitors (N16, noble gases), the SGBS, and the activity monitoring system for the condenser evacuation system (non-condensing gases extracted from the condenser).

9.3 Main Feedwater System

The MFWS extends from the feedwater tank through the feedwater pumping system, the HP feedwater heaters, feedwater isolation valves, and up to the SG main feedwater inlet nozzles. During normal power operation, the feedwater supply to the SGs is provided by the MFWS. For start-up and shutdown operation of the plant, a dedicated system, the SSS, is provided. The SSS is actuated automatically in the event of a low level in the SGs following a reactor trip with the loss of the MFWS. The SSS actuation reduces the frequency of the EFWS actuation and increases feedwater reliability.

Figure 9-2 shows a flow schematic of the MFWS and SSS.

The MFWS discharges feedwater from the feedwater tank by the feedwater pumping system via the feedwater piping system to the SGs. Feedwater is heated in two HP feedwater heater stages by the turbine extraction steam system. The condensed steam is cascaded back by the heater drains system to the feedwater tank. These systems are not required to operate during or after an accident. The system layout ensures that no malfunction of any component or piping of these systems will affect the safe operation of the plant or any system which is important to safety. Only the function of MFWS containment isolation is important to safety. Thus, the portion of the MFWS from the main feedwater containment isolation valves and feedwater piping system (from the isolation valve inlets to the SG main feedwater inlet nozzles) is safety class. The safety requirements of the MFWS are described below.

For accident scenarios, the MFWS participates indirectly in the reactivity control function by closure of the main feedwater isolation valve and the full-load and low-load isolation valves so as to prevent an overcooling transient due to SG overfeed.

During normal operation, the MFWS controls the SG supply of feedwater at the required flow rate as long as the startup and shutdown system is available.

To provide containment of radioactive substances in the event of a SGTR, the affected SG is detected and isolated. The MFWS provides isolation of the affected SG during a SGTR by means of the main feedwater isolation valve and full-load and low-load isolation valves. Thus, the potential for release of reactor coolant to the environment is minimized.

The single failure criterion is applied to the isolation valves of the MFWS to provide safe isolation of the feedwater supply by the MFWS and the startup and shutdown system.

The isolation valves of the MFWS are provided with emergency power backup so their functions can be performed in the event of a loss of off-site power.

The main feedwater piping system from the inlet of the MFWS containment isolation valves up to the SGs fulfills the following safety functions:

- Prevention of excessive mass flow by isolation via the main feedwater isolation valve and the high and low load isolation valves to prevent SG overfeed
- Retention of radioactivity in the affected SG in case of a SGTR by main feedwater isolation
- Control of the feedwater supply from the startup and shutdown system to the SGs

The feedwater piping system supplies feedwater from the feedwater tank to the SGs during power operation and startup/shutdown operations. The supply of feedwater is provided by the feedwater pumps or by the startup and shutdown pump.

The feedwater piping system outside the turbine building up to the SGs conveys the feedwater leaving the feedwater heating system to the SGs, and controls the SG water level by means of full-load and low-load control valves. The feedwater piping system outside the turbine building up to the SGs shuts off the feedwater supply in the event of a feedwater control malfunction, thus preventing overfeeding of the SGs. The feedwater piping system from the inlet of the MFWS containment isolation valves up to the SGs performs the following functions during accidents:

- Isolates the SG in the event of feedwater line breaks
- Shuts off the feedwater supply in case of main steam or feedwater line break to prevent containment overpressurization
- Retains the radioactivity in the affected SG in the event of SGTR
- Isolates the SG in case of LOCA to prevent containment bypass
- Prevents depressurization of the unaffected SGs in the event of a non-isolable feedwater line break inside the containment
- Prevents depressurization of the SGs in the event of an isolable feedwater line break
- Reduces overcooling in the event of a main steam line break

9.4 Turbine

The turbine generator is of the tandem compound design and consists of a double flow HP turbine and a six-flow low-pressure turbine solidly coupled to a three phase synchronous generator with a directly connected exciter.

No failure of the turbine steam system, lubricating oil system, or other system connected to these systems affects any other systems, components, or structures which are important to safety. Pertinent operating parameters are continuously monitored and alarms are actuated upon violation of specified limits.

Turbine trip is initiated if the integrity of any system or component important to turbine operation is endangered. No failure of rotating parts will impair the capability of the reactor to be shut down safely or of the RCS to be cooled down.

The turbine and its auxiliaries are manufactured, erected, tested and commissioned in accordance with the manufacturer's standard practices and in accordance with applicable codes to ensure high reliability of all systems and the mechanical integrity of the turbine generator set.

There is no radioactivity in this system during normal operating conditions. In the event of SG tube leakage, the small amount of radioactivity which may be present in the secondary system is detected by the main steam activity detectors, the SG blowdown processing system, and the condenser evacuation system.

Shaft integrity of the turbine-generator is maintained under all normal operating modes, transient conditions, and worst-case failure conditions. The worst-case failure is the loss of one last stage blade. The integrity of the rotor train is maintained by an appropriate bearing, bearing casing, and bearing pedestal anchor bolt design. The mechanical design of these components is set by the dynamic excitation forces due to the loss of a single last stage blade. The forces originate either from the impulse of a single last stage blade loss at overspeed or from the unbalance excitation (i.e., loss of last stage blade at overspeed and subsequent shutdown of the turbine-generator).

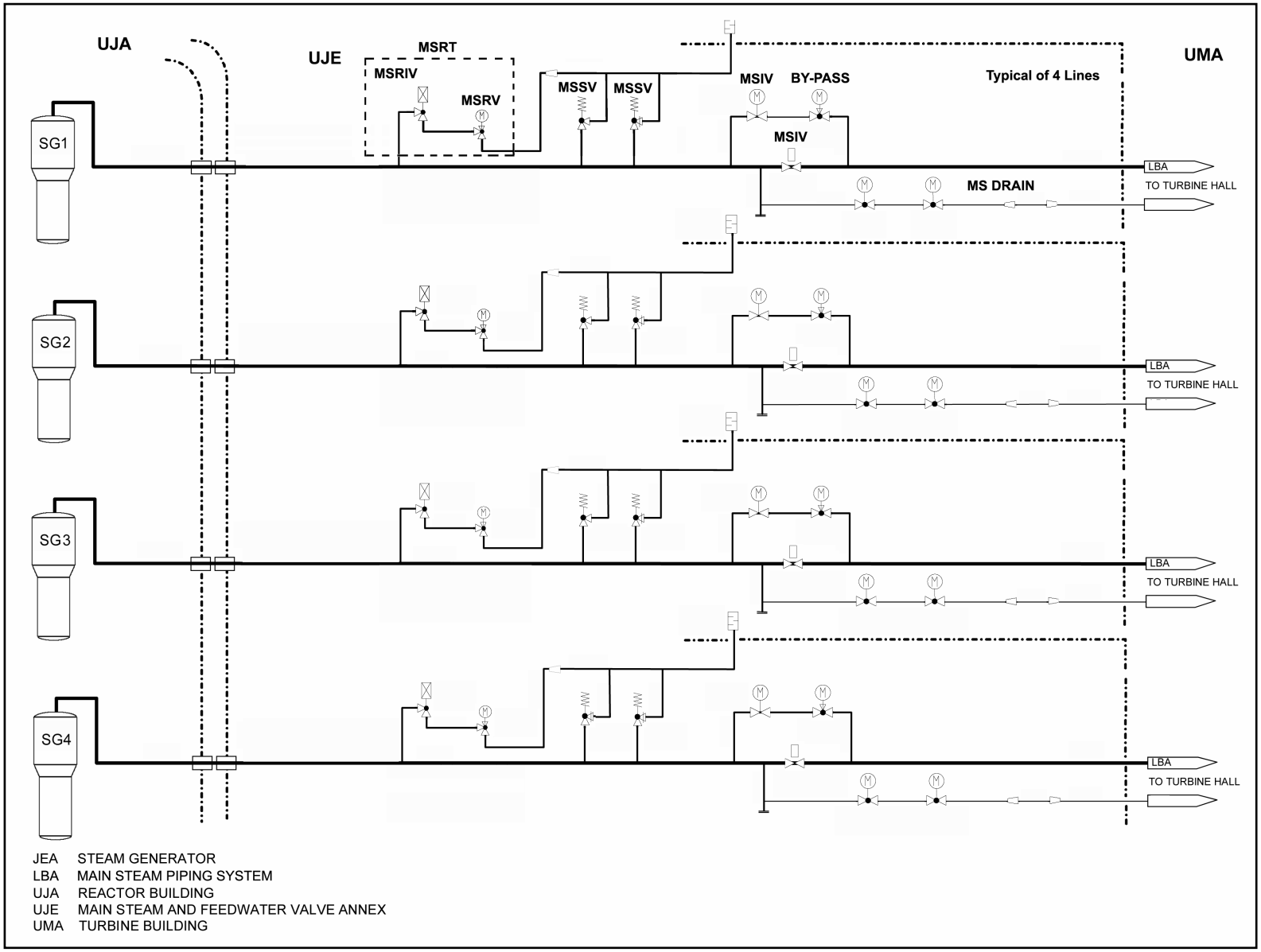

Figure 9-1
Main Steam System
(Safety Classified Portion)

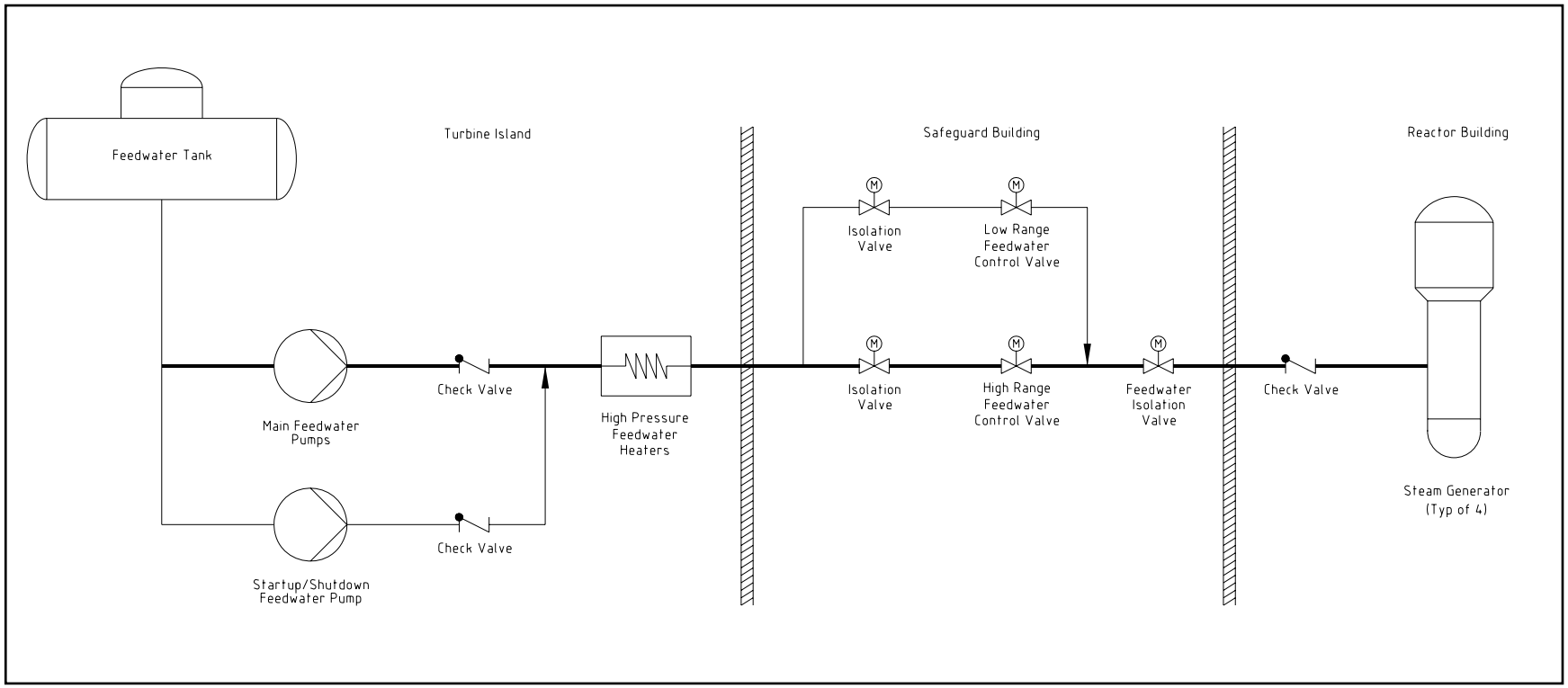

Figure 9-2
Main Feedwater System and Startup / Shutdown System

10.0 PLANT OPERATION AND REFUELING

10.1 Operating Procedures

The main operating modes are described below in a chronological sequence from core loading at the beginning of a cycle to core unloading at the end of the cycle. Stretch-out operation is also considered. (Only the primary side operation is described.)

10.2 Core Loading

The assumed starting point is the maintenance/refueling state when all the fuel elements are in the SFP. The water level in the RCS is below the vessel flange. The reactor vessel head is removed and the RPV internals are stored under water in the internals storage pool, separated from the reactor cavity by a water-tight removable gate. The fuel transfer compartment and the instrumentation lances compartment are flooded with their respective water-tight removable gates removed. The gates separate these compartments from the internals storage pool.

After reclosing the primary components (e.g., SG manways and RCP seals), the reactor cavity is filled with borated water (at refueling concentration) taken from the IRWST by one LHSI pump. The gate separating the reactor cavity and the internals storage pool is removed, the transfer tube isolation valve is opened, and the fuel is loaded into the RPV by means of the fuel handling devices (spent fuel mast bridge, transfer tube, and refueling machine). During this phase some components in two safety trains can have scheduled/preventive maintenance performed. After fuel loading, the upper internals are installed, the rod control cluster assemblies (RCCAs) are connected, and the core instrumentation lances are installed.

10.3 Reactor Coolant System Closing and Filling

After closing the transfer tube, the reactor cavity, the internals storage pool, and the transfer pool are drained to the IRWST through the SFP purification pumps and filters. Draining is continued through the CVCS letdown line (using the RHRS/CVCS connection) down to mid-loop level. The RCS level is automatically controlled by the CVCS in order to prevent core uncovery and to provide safe RHRS operation. After the reactor vessel is closed using the multi-stud tensioning device, coolant degassing is performed via the CVCS and connected systems (full flow degasifier). The electrical connections of the control rod drive mechanisms and core instrumentation are installed. During this operation the reactor coolant temperature is controlled by the LHSI/RHRS.

The primary system above mid-loop, including the SG tubes, is evacuated by means of the vacuum pump to minimize the oxygen content of the primary coolant. The RCS level is raised to a high level by borated make-up (degassed water) from the RBWMS through the CVCS charging pumps. The pressure in the gaseous phase is kept low by the vacuum pump.

10.4 Reactor Coolant Heat-up

In parallel with the above operation on the primary side, the secondary side is usually also made available. In particular, the SG secondary side water level is brought to its zero load setpoint.

The primary pressure is raised to approximately 360 psia by switching on the PZR heaters. The maximum rate for the PZR heat-up is 180°F/h. For the EPR, there is no solid RCS operation under pressure. During RCS pressurization, venting of the RCS is performed. After reaching the required pressure, the RCPs are

started. This operation is made possible by the prior operation of all necessary auxiliaries (seal injection by CVCS, motor and bearing cooling by CCWS, and electrical power supply). After RCP start-up, the RCS pressure control (via PZR heaters and normal spray) is set in the automatic mode. The power of the four RCPs, in addition to possible decay heat of the fuel, heats up the primary coolant at a prescribed heat-up rate controlled by the LHSI/RHRS up to approximately 248°F. The main steam bypass system and SSS control the heat-up to the hot shutdown condition. The excess volume due to the primary coolant expansion is removed from the RCS by the CVCS letdown line (automatic control of the PZR level) and directed to the primary coolant storage tanks for recycling. In parallel to the coolant heat-up, the primary pressure is brought progressively and automatically to approximately 2250 psia by operation of the PZR heaters while ensuring a sufficient subcooling margin.

During this process, at the required pressure or temperature, tests can be performed (e.g., PZR safety valve operability at approximately 580 psia, main steam valves in hot shutdown) and appropriate systems are made available or configured for higher pressure (e.g., MHSI, SIS accumulators, safety injection, or reactor trip signals interlocked by permissive signals).

10.5 From Hot Shutdown to Power Operation

After hot shutdown conditions are reached, all safety systems are available. If sufficient negative reactivity margin exists, the reactor coolant is deborated by injection of demineralized water from the RBWMS through the CVCS charging pumps (deboration can start during the last phase of reactor coolant heat-up). The withdrawn primary coolant is stored in primary coolant storage tanks for recycling. The control rods are then lifted out of the core until the core goes critical (it is also possible to go critical by deboration with all rods or some of the rods extracted first). The reactor coolant temperature is controlled indirectly by the main steam bypass (the SG pressure is automatically controlled by the main steam bypass; the thermal power is manually controlled by the rod position). Zero power tests are performed, and the power is then increased to 25% of nominal power. The SG level is controlled by the SSS until 3 to 4% of nominal power is reached, at which point the SGs are fed by the MFWS. While the reactor is between 10% and 25% nominal power, the turbine is started and the generator is synchronized to the main grid, and the power is progressively shifted from the main steam bypass to the turbine-generator set. At this power level, all RCS controls are in the automatic mode and the power is gradually increased up to 100% nominal power. An additional deboration is performed during the first fifty hours of the power generation for xenon build-up compensation.

The plant is base-loaded at or near rated power with infrequent planned power changes, which are made by boration or dilution of the RCS and limited RCCA movement.

10.6 Reactor Shutdown

At the end of the cycle the power is reduced to zero and the control rods are dropped. The reactor coolant temperature is then indirectly controlled by the main steam bypass. The SG level is controlled by the startup and shutdown system. Tests can be performed in the hot shutdown condition and the reactor coolant is borated. The reactor coolant is cooled to approximately 248°F by the main steam bypass with the four RCPs in operation at a prescribed cooldown rate. In parallel, the primary pressure is reduced to approximately 360 psia while ensuring a sufficient subcooling margin.

Boration can also be performed during cool down. At approximately 248°F and 360 psia some RCPs are stopped and one or two LHSI/RHRS trains are connected and started up to continue RCS cool down. Below 212°F, more LHSI/RHRS trains can also be connected and started to provide increased cooling capacity. All but one RCP in operation is stopped at 158°F, and the last one is stopped at 131°F. This

results in reaching a reactor coolant temperature of 131°F within approximately 16 hours after the reactor is tripped (the target is a temperature of about 158°F at the reactor vessel head outer surface).

The lost volume resulting from the primary coolant contraction is compensated for by the CVCS charging pumps and the RBWMS pumps from the boric acid and demineralized water storage tanks.

After the last RCP is stopped, the PZR pressure is brought to approximately 73 psia by the auxiliary spray. This pressure is maintained by nitrogen make-up during the final cooling of the liquid phase to 131°F.

10.7 Reactor Coolant System Draining and Opening

The reactor coolant is drained to mid-loop level by the CVCS letdown line through the RHRS/CVCS connection and the drained coolant is sent to the primary coolant storage tanks for recycling. The water level is reliably controlled (automatic level control via CVCS) to prevent core uncovery and provide safe RHRS operation. During the draining process, the PZR vapor phase pressure is lowered to atmospheric pressure. If the radioactivity content of the primary coolant makes it necessary, the gaseous phase is swept by nitrogen and sent to the GWPS. After a final sweeping with the gas being sent to the stack through the HVAC systems, opening of the RCS is possible.

The electrical connections of the control rod drive mechanisms and core instrumentation are removed. The multi-stud tensioning device is installed and used for vessel head removal.

10.8 Core Unloading

While the vessel head is lifted, the reactor cavity, the internal storage pool and the transfer pool are flooded with borated water taken from the IRWST by one LHSI pump. The core instrumentation is removed and the RCCAs are disconnected. The upper internals are removed to their storage pool, the transfer tube is opened, and fuel handling can start (at about 70 hours after reactor shutdown). The reactor coolant temperature is kept below 131°F by LHSI/RHRS trains. During this phase maintenance can be performed on some of the components in two safety trains.

In addition to the decay heat of previously stored fuel elements, the heat load of the SFP in the Fuel Building increases by the decay heat of the unloaded core. Therefore, the second SFP cooling train is operated to keep the SFP below the required temperature.

After complete core unloading, the water-tight gate between the reactor cavity and the internals storage pool is installed and the RCS is drained to the IRWST through SFP purification pumps and is available for in-service inspection and SG tube inspections.

10.9 Stretch-Out Operation

In power operation, the reactivity available for burn-up is compensated by poisoning the coolant with boron. As burn-up increases, the boron concentration is continuously reduced. The end of the cycle is reached when the boron concentration falls to a value approaching zero.

To continue power operation beyond the natural end of cycle, the decrease in reactivity associated with burn-up is compensated by reducing coolant temperature. With the control rods almost fully withdrawn and the turbine admission valves fully opened, the plant power level is determined by the reactivity balance of the reactor and the turbine characteristic.

As there is no longer any reactivity reserve available to ensure a constant average coolant temperature, the average coolant temperature and the reactor power, as well as the main steam pressure decrease steadily. The coolant mass in the RCS is kept constant during power operation. Thus the decreasing coolant temperature leads to a continuously falling PZR level.

When the minimum permissible PZR level is reached, the RCS inventory is increased to allow continuation of the stretch-out mode. This marks the end of the first stretch-out phase. The limit is determined by the requirement to ensure the minimum PZR inventory in the event of a reactor trip. In parallel with the increase of the PZR level to its full-load setpoint, the secondary-side MSRT setpoints are reduced to accommodate the coolant expansion volume in the PZR in the event of a loss of main heat sink when the main steam bypass is not available for main steam pressure limitation.

By means of repeated setpoint adjustments as described above, the stretch-out operating mode exhausts the reactivity reserves.

Stretch-out operation is considered a standard operation that is systematically applied at the end of each fuel-cycle to increase the discharge burn-up. This type of operation is made possible by simple commands from the Main Control Room without the need to manually adjust setpoints. This stretch-out process applies without interruption and the setpoints of controls, limitations, and protections are modified automatically.

10.10 Mid-Loop Operation

The EPR is operated at mid-loop in the startup and shutdown sequences associated with refueling or maintenance, as follows:

Start-up

- Pool and vessel flange cleaning
- Coolant degassing and vessel head closure
- Evacuation of the primary system via the vacuum pump

Shutdown

- Sweeping of primary system by nitrogen
- RPV opening
- Work on RCP seals, if needed

Mid-loop operation is preferred during evacuation and sweeping of the primary system because it permits draining of the SG, thus making evacuation and sweeping more efficient (filling of SG tubes in the first case and avoiding degassing of water in SG tubes in the second case).

Mid-loop operation is conducted while cleaning the pool and the vessel flange. Since mid-loop automatic level control is available, this cleaning activity is performed preferably at mid-loop, unless radiological exposure while cleaning the vessel flange and pool and during handling of the vessel head proves unacceptable. The subsequent degassing of primary water is performed at the same level as the pool and vessel flange cleaning, either at mid-loop or at flange level.

The RCS loop level control contributes to the control of the RCS water inventory safety function during mid-loop operation at shutdown. The control is based on a comparison between the measured RCS loop

level and a reference level and gives a command signal to the CVCS low pressure letdown flow control valve. The RCS loop reference level is determined to ensure a sufficient RCS water inventory for RHRS/LHSI operation and satisfy maintenance requirements. A high or low RCS loop level generates alarms or automatic limitation action, such as closure of the CVCS low pressure letdown flow path in the event of low level. The RCS loop level measurements are also used to actuate protective I&C functions in the event of a failure of the above means. Actuation of safety injection will occur upon a RCS loop low level signal.

The main consequence of loss of level prior to core uncovery is the loss of the RHR function through cavitation of the RHR pump, since the NPSH of these pumps is lower and a vortex can occur at the suction in the hot leg. Cavitation is prevented by:

- Reduced RHRS flow velocity
- An anti-vortex device
- Automatic control of the level in the loop

In the event of a loss of level at mid-loop operation, three degrees of mitigation are available:

- The RCS level control will intervene using the allowable imbalance between the CVCS charging flow and letdown flow.
- The CVCS letdown line isolation is initiated when the level is low enough for a vortex to be generated.
- The safety-related safety injection signal actuates the MHSI pump and containment is isolated, thus resulting in CVCS letdown line isolation.