Cost/Benefit of Risk-Informed Fire Protection

Brew Barron

Duke Power Company

Session C4: Fire Protection

March 9, 2004

Introduction

- Like many plants, Duke Power developed a unique approach to meet Appendix R Safe Shutdown requirements. Two Duke-specific attributes include:
  - Standby Shutdown Facility (SSF)
  - Armored Cable
- A unique approach is common in the industry:
  - Plants not originally designed to meet App. R
  - Parts of App. R can be “interpreted”
- Unique Appendix R approach combined with changing regulatory expectations were major factors when considering NFPA-805, Risk-Informed Fire Protection.

Standby Shutdown Facility

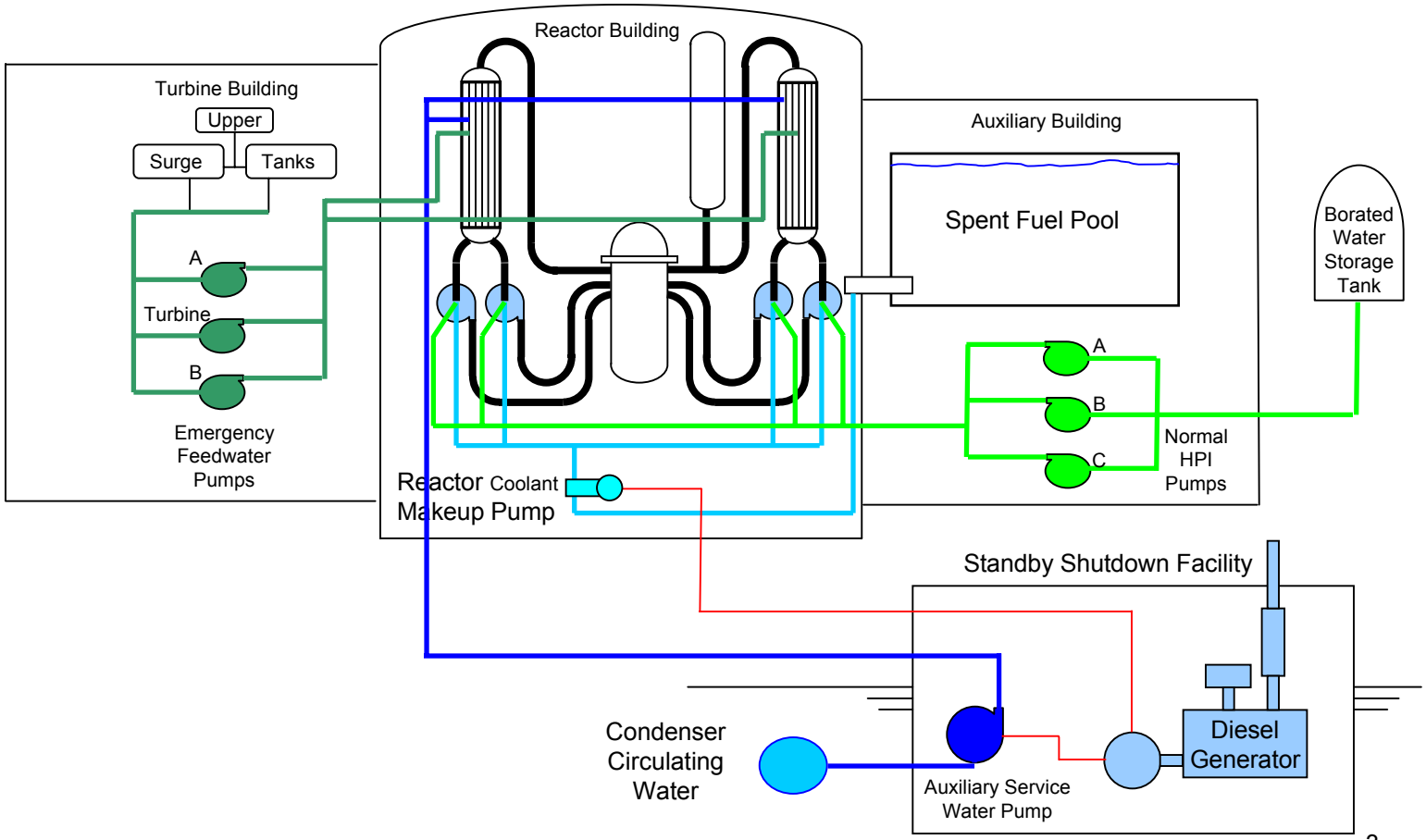

Armored Cable Construction

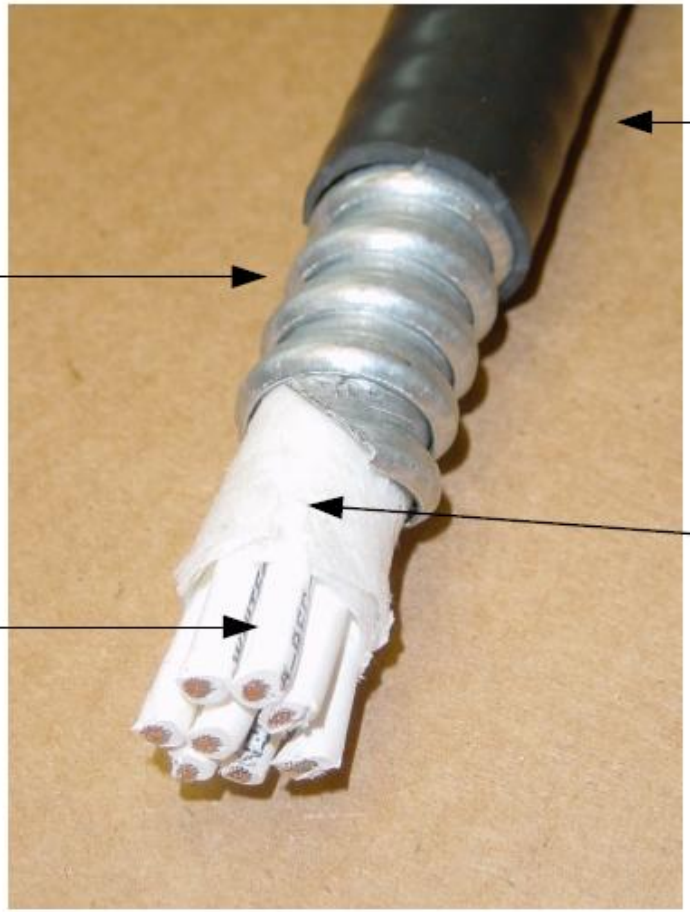

Figure 5-12
Armored Cable Construction

Cost Reduction

- Primary Savings:
  - Modifications only needed when they support risk significant improvements and maintain adequate defense in depth.
  - Plant Modifications may be required to support:
    - New multiple spurious operation requirements (RIS 2004-03).
    - Proposed III.G.2 manual actions rulemaking.
- Other cost reductions are possible, but less important.

Safety Focus

- Spurious Operation:
  - Focus plant License Basis on high risk multiple spurious.
  - Can factor plant response based on Risk factors:
- Procedural Actions:
  - Fire Response Procedures will focus on Risk-Important actions:
- Monitoring:
  - System availability and Operational parameters affecting fire risk will be tracked.

Regulatory Environment

- Regulatory Expectations continue to change:
  - RIS-2004-03 (multiple spurious)
  - III.G.2 manual Actions Rulemaking.

- Enforcement Discretion allows us to focus on correcting issues, rather than focusing on responding to enforcement issues

- Transition provides us the opportunity to clean up 20 year old license basis.

Conclusions

- Duke Plants, like many others, have a unique approach for meeting the Appendix R Safe Shutdown requirements.
- NFPA-805, Risk-Informed Fire Protection, provides a clear regulatory process and flexibility for addressing further changes, given increased and changing regulatory requirements.
- Unique aspects at other plants added with new regulatory requirements would be major considerations for any plant considering NFPA-805.