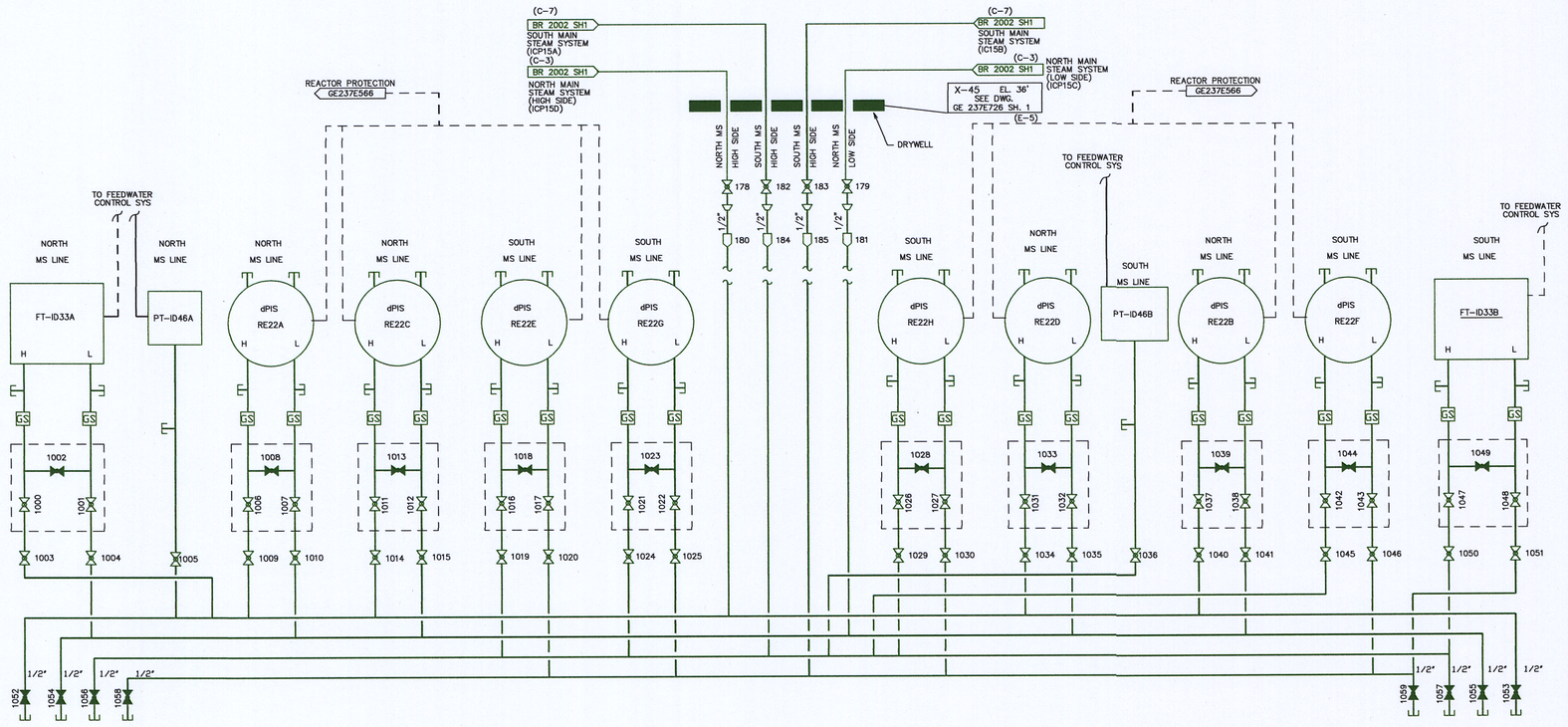

NOTES:

1. ALL VALVES ARE PREFIXED BY V-1 UNLESS OTHERWISE NOTED.
2. THIS DRAWING IS BASED ON JC 19616 SHEET 1 REVISION 8.
3. THIS DRAWING INCLUDES THE FOLLOWING LICENSE RENEWAL SYSTEM:
   MS- MAIN STEAM SYSTEM

TABLE OF ADDITIONS & CHANGES

NO	DATE	DESCRIPTION	REV'D	CHK'D	APP'D
0	7 08 98	INITIAL ISSUE FOR LICENSE RENEWAL	JZ VM	MJM	KPM

MECHANICAL

LICENSE RENEWAL DRAWING
MAIN STEAM INSTRUMENTS

OYSTER CREEK
AmerGen

SHEET 1 OF 1 | LR-JC-19616 | 0

DWG NO. LR-JC-19616 | SH. 1 OF 1

D79