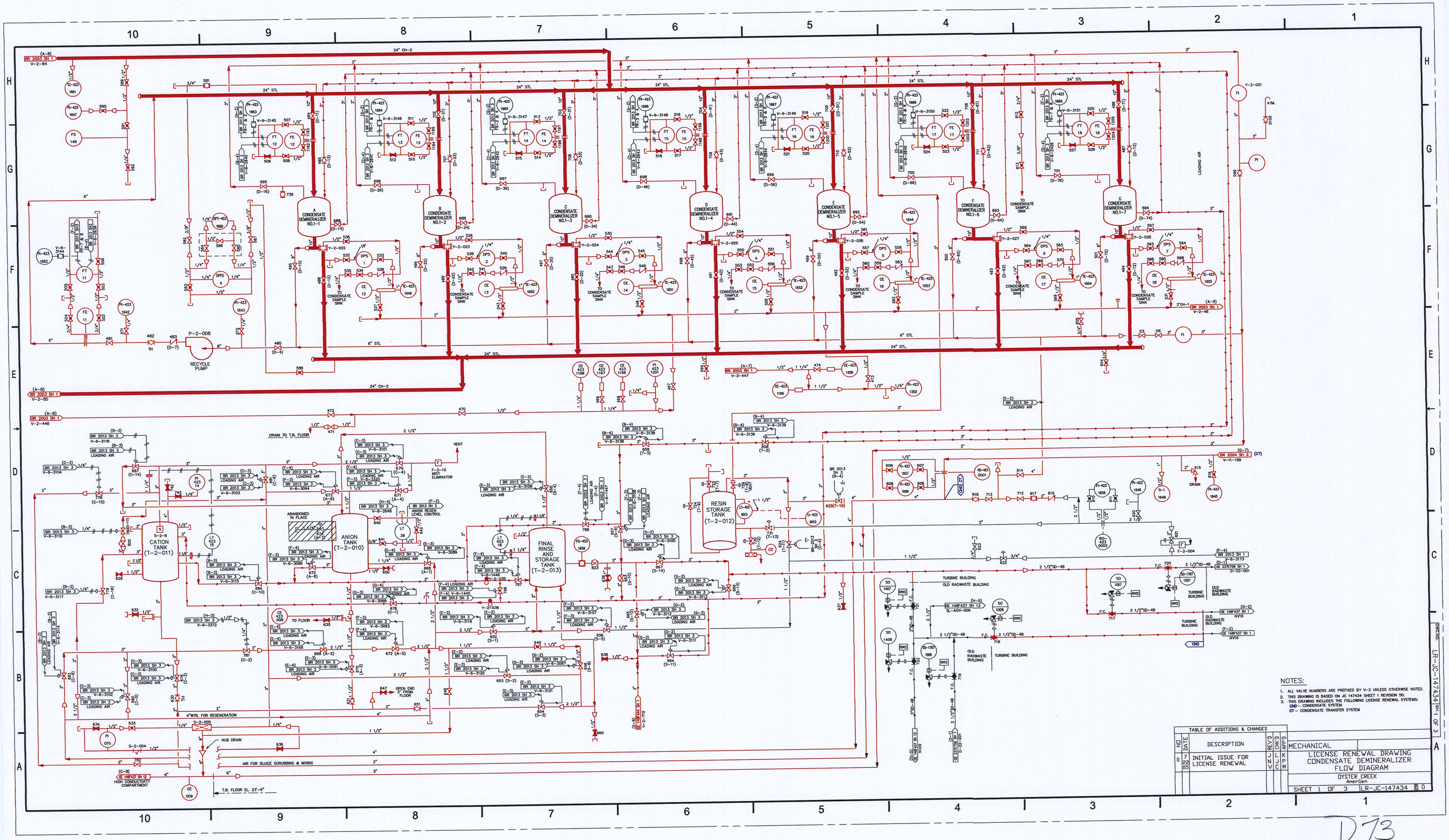

NOTES:

1. ALL VALVE NUMBERS ARE PREFIXED BY V-2 UNLESS OTHERWISE NOTED.
2. THIS DRAWING IS BASED ON JC 147434 SHEET 1 REVISION 50.
3. THIS DRAWING INCLUDES THE FOLLOWING LICENSE RENEWAL SYSTEMS:
   CND – CONDENSATE SYSTEM
   CT – CONDENSATE TRANSFER SYSTEM

TABLE OF ADDITIONS & CHANGES

NO	DATE	DESCRIPTION	REV'D	CHK'D	APP'D
0	7 22 05	INITIAL ISSUE FOR LICENSE RENEWAL	JNV	LJC	KPM

MECHANICAL

LICENSE RENEWAL DRAWING
CONDENSATE DEMINERALIZER
FLOW DIAGRAM

OYSTER CREEK
AmerGen

SHEET 1 OF 3 LR-JC-147434 0

DWG NO. LR-JC-147434 SH 1 OF 3

D73