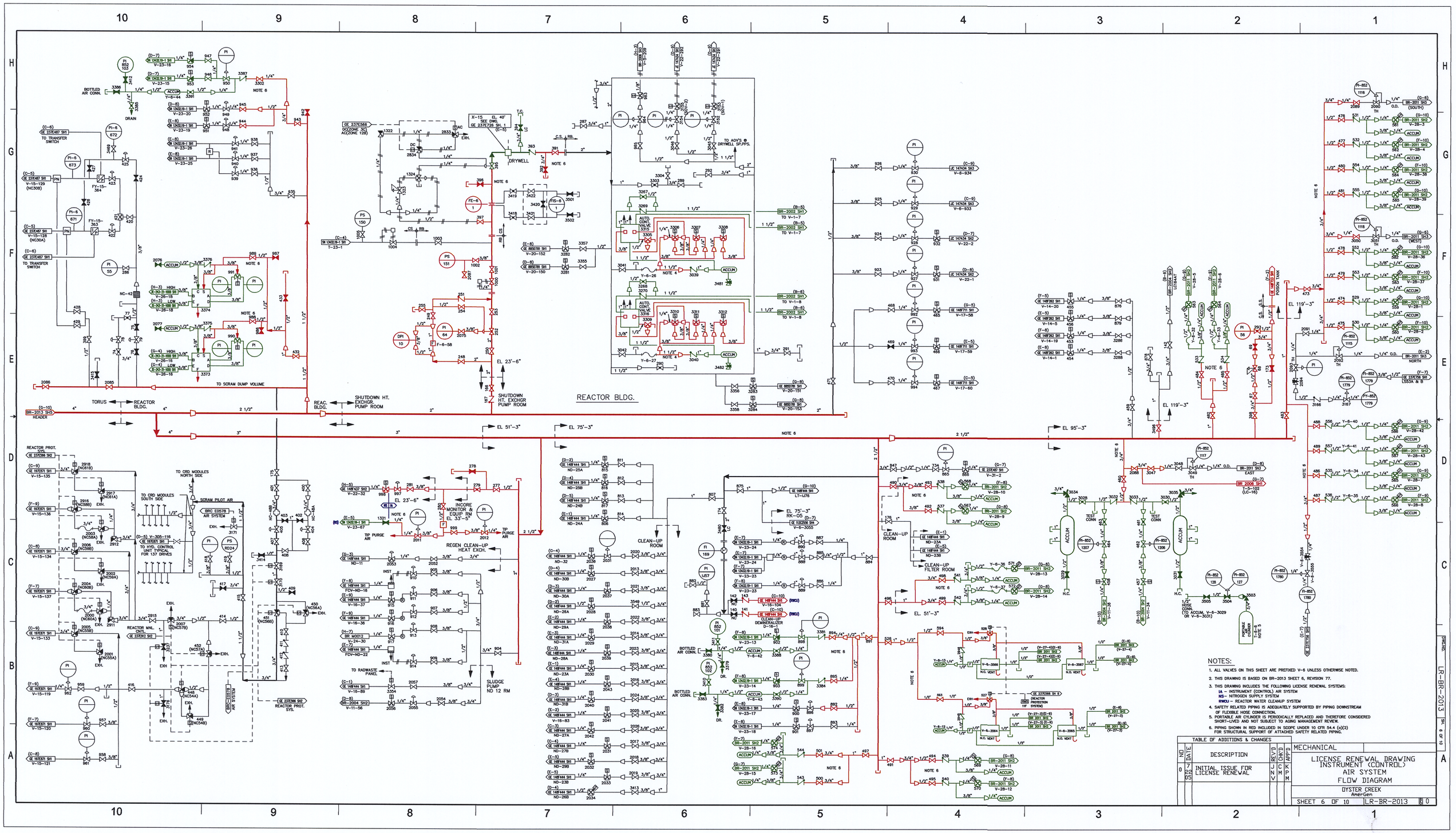

NOTES:

1. ALL VALVES ON THIS SHEET ARE PRETIXED V-6 UNLESS OTHERWISE NOTED.
2. THIS DRAWING IS BASED ON BR-2013 SHEET 6, REVISION 77.
3. THIS DRAWING INCLUDES THE FOLLOWING LICENSE RENEWAL SYSTEMS:
   IA – INSTRUMENT (CONTROL) AIR SYSTEM
   NS – NITROGEN SUPPLY SYSTEM
   RWCU – REACTOR WATER CLEANUP SYSTEM
4. SAFETY RELATED PIPING IS ADEQUATELY SUPPORTED BY PIPING DOWNSTREAM OF FLEXIBLE HOSE CONNECTION.
5. PORTABLE AIR CYLINDER IS PERIODICALLY REPLACED AND THEREFORE CONSIDERED SHORT-LIVED AND NOT SUBJECT TO AGING MANAGEMENT REVIEW.
6. PIPING SHOWN IN RED INCLUDED IN SCOPE UNDER 10 CFR 54.4 (a)(2) FOR STRUCTURAL SUPPORT OF ATTACHED SAFETY RELATED PIPING.

TABLE OF ADDITIONS & CHANGES

NO	DATE	DESCRIPTION	REV'D	CHK'D	APP'D
0	7 22 05	INITIAL ISSUE FOR LICENSE RENEWAL	JNV	CKM	CKM

MECHANICAL

LICENSE RENEWAL DRAWING
INSTRUMENT (CONTROL)
AIR SYSTEM
FLOW DIAGRAM

OYSTER CREEK
AmerGen

SHEET 6 OF 10 LR-BR-2013 0

D-35