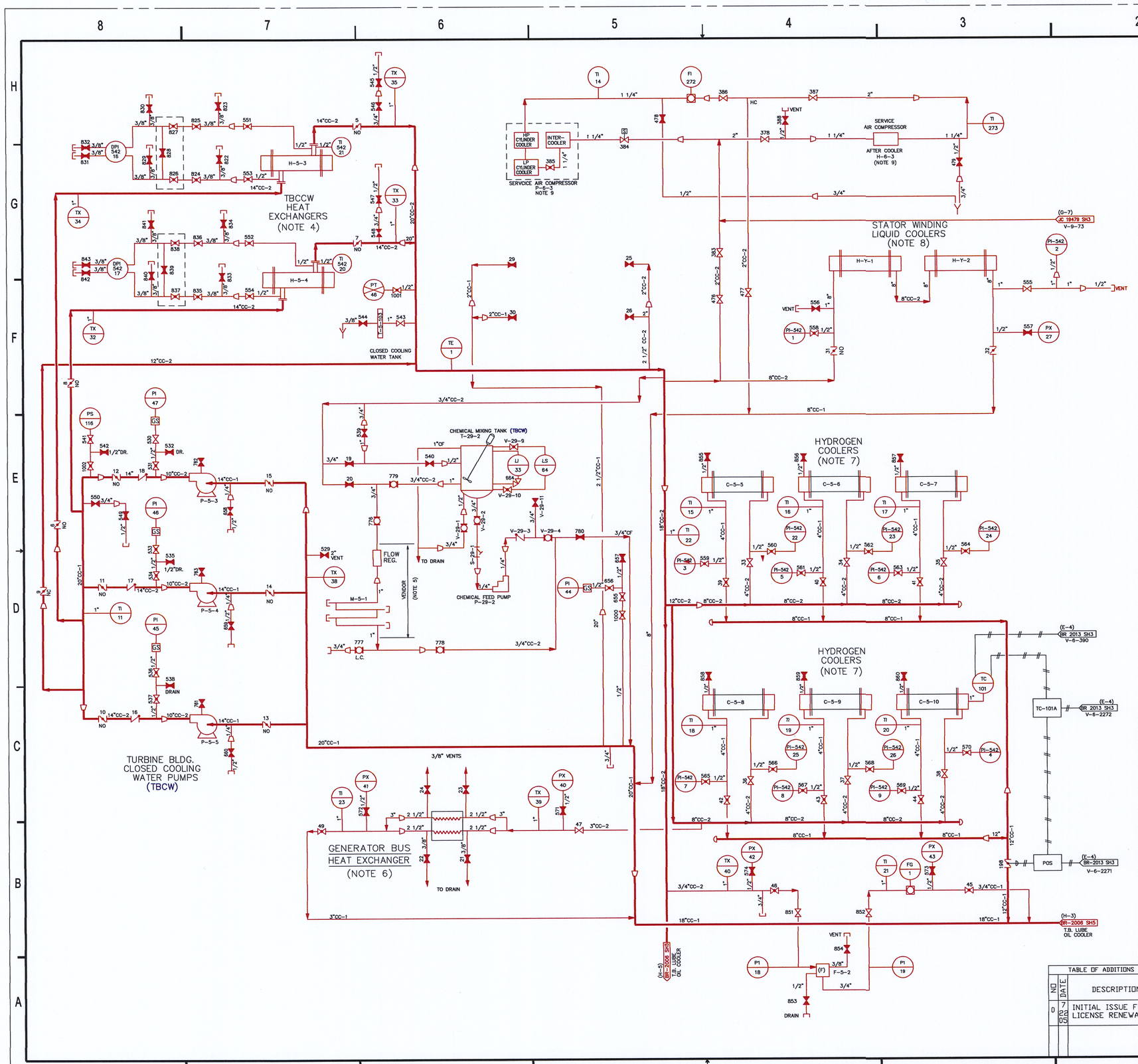

NOTES:

1. ALL VALVE NUMBERS ARE PREFIXED BY V-5 UNLESS OTHERWISE NOTED.
2. THIS DRAWING IS BASED ON BR-2006 SHEET 4 REVISION 63.
3. THIS DRAWING INCLUDES THE FOLLOWING LICENSE RENEWAL SYSTEMS:
   TBCW – TURBINE BUILDING CLOSED COOLING WATER SYSTEM
4. THE TBCW HEAT EXCHANGER SHELL SIDE COMPONENTS ARE EVALUATED WITH THE TBCW SYSTEM. THE TBCW HEAT EXCHANGER TUBE SIDE COMPONENTS ARE EVALUATED WITH THE SERVICE WATER SYSTEM.
5. COMPONENT M-5-1 IS A BY-PASS PIPING SYSTEM WHICH CONSISTS OF PIPING, FITTINGS, A FLOW REGULATING VALVE AND 4 COUPONS FOR CORROSION MONITORING.
6. THE GENERATOR BUS HEAT EXCHANGER TUBE SIDE COMPONENTS ARE EVALUATED WITH THE TBCW SYSTEM. THE HEAT EXCHANGERS EXTERNAL ENVIRONMENT IS INDOOR AIR.
7. THE HYDROGEN COOLERS TUBE SIDE COMPONENTS ARE EVALUATED WITH THE TBCW SYSTEM. THE COOLERS SHELL SIDE IS HYDROGEN GAS AND IS NOT IN SCOPE FOR SPATIAL INTERACTION.
8. THE STATOR WINDING LIQUID COOLERS TUBE SIDE COMPONENTS ARE EVALUATED WITH THE TBCW SYSTEM. THE STATOR WINDING LIQUID COOLERS SHELL SIDE COMPONENTS ARE EVALUATED WITH THE MAIN GENERATOR AND AUXILIARY SYSTEM.
9. SERVICE AIR COMPRESSOR CYLINDER COOLING IS PROVIDED BY TBCW. THE SERVICE AIR COMPRESSOR AFTERCOOLER SHELL SIDE COMPONENTS AND THE INTERCOOLER TUBE SIDE COMPONENTS ARE EVALUATED WITH THE TBCW SYSTEM.

TABLE OF ADDITIONS & CHANGES

NO	DATE	DESCRIPTION	REV'D	CHK'D	APP'D
0	7 22 05	INITIAL ISSUE FOR LICENSE RENEWAL	JNV	MAM	KPM

MECHANICAL

LICENSE RENEWAL DRAWING
TURBINE BUILDING CLOSED COOLING WATER SYSTEM
FLOW DIAGRAM

OYSTER CREEK
AmerGen

SHEET 4 OF 8 | LR-BR-2006 | 0

DWG.NO. LR-BR-2006 | SH. 4 OF 8

D19